SHEBERGHAN GAS FIELD DEVELOPMENT PROJECT (SGFDP)

Gas/Power and Related Infrastructure Assessment

April 5, 2011

Sheberghan Gas Field Development Project (SGFDP)
USAID Contractor

Advanced Engineering Associates International, Inc. (AEAI)
1707 L Street, NW, Suite 725 Washington, D.C. 20036 Phone: 202-263-0604

TABLE OF CONTENTS

ABBREVIATIONS 2

I. EXECUTIVE SUMMARY 1

II. INTRODUCTION 4

III. GAS FIELD DEVELOPMENT AND RELATED INFRASTRUCTURE IN SUPPORT OF THE IPP 5

1. The Juma and Bashikurd Gas Fields 6

2. The gas field Development Proposal 8

3. Well Information 9

4. Local environmental and infrastructure Information 12

5. Field Infrastructure 15

6. Gas Processing Plant 17

7. Pipeline from the Gas Processing Plant to the IPP 23

8. Gas Metering and Regulation System at IPP Custody Transfer 23

IV. ELECTRIC SYSTEM AND RELATED INFRASTRUCTURE IN SUPPORT OF THE IPP 24

1. Power Plant Technology Options 26

2. Substations 33

3. Power Transmission Lines 33

4. Power Synchronization 35

5. Electricity Dispatch – National load control center 36

V. WATER AVAILABILITY 37

VI. PRELIMINARY ASSESSMENT OF AFGHAN GAS ENTERPRISE AND POTENTIAL WORK FORCE NEEDS AND TRAINING 44

VII. ENVIRONMENTAL DOCUMENTATION REQUIREMENTS 51

VIII. CONCLUSIONS ON REQUIRED INFRASTRUCTURE AND RELATED COSTS 55

ABBREVIATIONS

ADB	Asian Development Bank
AEAI	Advanced Engineering Associates International, Inc.
BCM	Billion Cubic Meters
CO_2	Carbon Dioxide
DABS	Da Afghanistan Breshna Sherkat
GPIA	Gas/Power and Related Infrastructure Assessment
GoIRA	Government of Islamic Republic of Afghanistan
Gustavson	Gustavson Associates, LLC
H_2S	Hydrogen Sulfide
IPP	Independent Power Producer
m^3	Cubic Meters
MCM	Thousand Cubic Meters
MEW	Ministry of Energy and Water
MMCM	Million Cubic Meters
MoF	Ministry of Finance
MoM	Ministry of Mines
NEPS	North Eastern Power System
NHU	Northern Hydrocarbon Unit
OPIC	Overseas Private Investment Corporation
PMU	Project Management Unit
SGFDP	Sheberghan Gas Field Development Project
USAID	United States Agency for International Development

I. EXECUTIVE SUMMARY

The main objective of the Sheberghan Gas Field Development Project (SGFDP) is to design a roadmap for the development of Sheberghan gas fields and to attract a private investor to construct and operate a 200 megawatt (MW) gas-fired power plant in Sheberghan in the form of an Independent Power Producer (IPP). It is anticipated that Afghan Gas Enterprise (Afghan Gas) will play a major role in supplying gas to the IPP, as well as the development of the gas fields. The Overseas Private Investment Corporation (OPIC) is working closely with a group of investors who have shown interest in investing in the construction and operation of the 200 MW gas-fired power plant.

Since coordination and collaboration among all stakeholders is essential to the success of this project, SGFDP has established the Sheberghan Project Management Unit (PMU) at the Afghan Geological Survey to track Sheberghan gas and power related activities and associated infrastructure.

The purpose of the Gas/Power and Related Infrastructure Assessment (GPIA) is to provide a roadmap of the gas and power related infrastructure requirements in order to construct and operate a 200 MW-gas fired power plant in the form an IPP. Since there have been numerous feasibility studies conducted about the condition of the current infrastructure in Sheberghan for both gas and power, the SGFDP team has attempted to provide an updated overview of what is required to complete the IPP transaction from a technical perspective. In order to achieve this, the SGFDP team over the last year, in close collaboration with the Ministry of Mines (MoM), has conducted several fact finding missions to Sheberghan.

Overall, the GPIA consists of five major sections: 1) gas field development and related infrastructure; 2) electric system and related infrastructure; 3) water availability; 4) assessment of Afghan Gas and workforce needs; and 5) environmental considerations.

The gas field development section contains capital construction cost estimates for the needed infrastructure to take the gas from “bottom hole to burner tip.” Essentially, it contains each component necessary to extract the gas from the reservoir, transport it from the field to the processing facility, then transport the pipeline quality gas to the IPP. The overall estimate for the cost of the natural gas infrastructure facilities is approximately $124 million, with the largest components being the natural gas processing facility ($73 million est.) and the drilling and rehabilitation project ($37 million est.). While these two projects represent the bulk of the capital construction costs, it is important not to overlook the remaining $14 million of estimated costs associated with gathering lines, manifolds, knockout separators and pipelines.

The electrical infrastructure section contains information on the costs and necessary activities in the electricity sector to evacuate the 200 MW of power from the IPP site. The SGFDP team anticipates that all of the power produced by the IPP will be purchased by Da Afghanistan Breshna Sherkat (DABS) and integrated into the North Eastern Power System (NEPS) system. In order to evacuate the 200 MW of electric power from the IPP site south of Sheberghan, additional transmission lines will need to be built. ADB has committed to funding a 220 kV transmission line from the IPP

to Naibabad, to connect the IPP to the NEPS system. ADB is also planning to upgrade the existing distribution system and provide approximately 25,000 new domestic connections in the City of Sheberghan. If needed, ADB has also expressed interest in a substation to connect the IPP to the distribution system in Mazar-e-Sharif. Further, there are opportunities to engage domestic anchor customers, such as industrial zones and military bases, in the Northern provinces that could provide a ready market for the power.

The estimated cost of transmission line from the IPP to Naibabad, including the required step-up and step-down transformers, estimated to cost about $54 million. During late 2010 and early 2011, several feasibility studies were commissioned by different donors to examine aspects of the electric power system in Afghanistan, including the expansion of NEPS. These feasibility studies were nearing completion when the GPIA was prepared. The SGFDP team attempted to include as much information about the electrical infrastructure needed for the IPP as possible without the benefit of the on-going feasibility studies. If necessary, the SGFDP team may update the GPIA to reflect the substance of these feasibility studies, once completed.

Once the electricity reaches Naibabad, there are several options for moving the power to Kabul and points beyond. However, these options, as well as the existing supply constraints and impact of power imports from Uzbekistan, Tajikistan, and Turkmenistan are the subject of the on-going feasibility studies mentioned above. It appears likely that donors, primarily USAID and ADB, will be funding expansion projects based on the feasibility studies necessary to move both the imported and domestic power to Kabul and beyond. Based on preliminary reports of the feasibility studies, it appears that there will be sufficient capacity in the transmission system on or before the estimated completion date for the IPP to transport the power from Sheberghan to Kabul. However, this will have to be confirmed once the feasibility studies are finalized and funding commitments have been secured.

The water availability section lays out the necessary water development infrastructure to support a combined cycle configuration for the IPP. Based on the information provided by the Hydrogeology Department in the Ministry of Mines (MoM), the available groundwater supplies near Quarakent should be more than sufficient to support the needs of the IPP. Even a high end estimate for the water usage of the power plant, at 12 liters per second, would require only two additional wells in the Quarakent area and would be well below the 60 liters per second that, according to the Hydrogeology Department, would begin mining the aquifer. It's apparent from the available data that sufficient water resources exist in the Sheberghan area to support the IPP if the developers were to choose the combined cycle option.

Since Afghan Gas is anticipated to play a major role and be the supplier of the fuel to the IPP, it would be beneficial to integrate the Northern Hydrocarbon Unit (NHU) and Afghan Gas in order to create one corporatized entity. This entity would be a vertically-integrated gas company—having responsibilities for upstream, midstream, and downstream functions. The expertise that the NHU brings to the table will enhance existing Afghan capabilities and will ensure the creation of a natural gas company that will be the foundation of a modern gas sector for Afghanistan.

Beginning the corporatization process will be critical to taking further steps with Afghan Gas, such as reorganization, negotiating a possible management contract, and coming up with a compensation plan that will retain and attract the required skilled workforce to carry out its responsibilities.

In order to proceed with the IPP transaction, skilled labor force is needed for both, the gas as well as the power side. On the gas side, Afghan Gas has access to trainable entry-level technical personnel as there are several vocational training centers and Balkh University, located in the North. It is reasonable to assume that, in the absence of any DABS generation in Sheberghan, there is no local expertise to manage or operate a modern power plant. The nearest expertise may be available at the fertilizer power plant in Mazar-e-Sharif. The IPP management will need to rely on importing and contracting with key staff from outside Afghanistan for the operations of the power plant.

Finally, the environmental considerations section is designed to provide information on compliance with 22 CFR 216, the regulations that essentially apply the United States National Environmental Policy Act (NEPA) requirements to USAID's activities and projects abroad. These regulations do not apply to the IPP transaction because USAID is not funding or participating in the actual construction or the operation of the IPP. However, the IPP will still be subject to the Afghan Environment Law, which is substantially similar to NEPA and the requirements of 22 CFR 216. The Afghan Environment Law and its impacts on the IPP transaction are discussed at length in the *Legal and Regulatory Analysis Report*. 22 CFR 216 compliance will be an important consideration for the well rehabilitation/drilling project because that activity will be substantially funded by USAID. The environmental considerations section contains the relevant provisions of 22 CFR 216 that could impact the project.

II. INTRODUCTION

Over the last three decades there has been minimal new gas exploration activity due to the civil strife in the country and negligible investment funding. However, Afghan Gas, a government-owned enterprise operating under the Ministry of Mines, is still involved with gas drilling, desulphurization, and collection activities. This activity is presently being conducted at Yatimtaq, Gerquduq, Shakarak II, and Khoja Gogerdak gas fields. However, a field trip and visual inspection showed an inefficient operation pieced together with antiquated equipment, no personal safety considerations, and generally run by staff and engineers with minimal training in modern operations. Presently, the collected gas from the producing 37 wells amounts to 420 thousand cubic meters per day. Most of this gas is being piped to the MOM owned fertilizer plant at Mazar-e-Sharif. Some of it is piped to Sheberghan for local consumption.

Previous studies on oil and gas infrastructure include:

- Sofregaz submitted a series of 14 reports on June 28, 2004.
- Hill International submitted an extensive report titled “Evaluation of Investment Options for the development of Oil and Gas Infrastructure in Afghanistan” on August 15, 2004.
- Gustavson Associates submitted a detailed gas reserves study titled “Promotion of Oil and Gas Producing Areas to the Private Sector” on June 7, 2005.
- AEAI submitted a series of reports on the technical and economic feasibility of development of a gas-fired thermal power facility in Sheberghan, Afghanistan in March of 2006.

Based on historic gas exploration data and previous gas related studies, the general conclusion has been that significant gas reservoirs do exist in the Sheberghan area. Therefore, MOM has requested USAID and other donor agencies to fund gas exploration and development activities with the goal of supplying treated natural gas to a new 200 MW power plant to be located in Sheberghan.

There are several infrastructure requirements in order to construct and operate a gas-fired power plant such as gas treatment facility, water supply lines, substations, and power transmission lines, among others. This report assesses the infrastructure needs and associated costs necessary for successful development of a new 200 MW power plant in the Sheberghan area.

III. GAS FIELD DEVELOPMENT AND RELATED INFRASTRUCTURE IN SUPPORT OF THE IPP

Initially, AEAI studied the prospect of developing the Gerquduq, Khoja Gogerdak and Yatimtaq gas fields in the Sheberghan area. According to the Technical and Economic Feasibility of Development of a Gas-Fired Thermal Power Facility in Sheberghan, Afghanistan,[1] hereafter "the 2006 Feasibility Study," there were sufficient gas reserves in Yatimtaq and Khoja Gogerdak (with Gerquduq as a stand-by reserve) to power a 100 MW power plant for a design life of 20 years.[2] The 100 MW power plant contemplated in the 2006 Feasibility Study would have taken 190MMCM per year.[3] Estimates of the remaining reserves in the three fields, at P50 distribution[4], were 13.6 BCM in Khoja Gogerdak, 3.7 BCM in Gerquduq and 7.0 BCM in Yatimtaq. Based on the calculations above, a 100 MW power plant, operating for 20 years, would have used 3.8 BCM sweetened gas over its 20 year lifetime. The remaining reserve estimates in the three fields would have been more than sufficient to generate the power and support other key industries, such as the Northern Fertilizer and Power Plant (NFPP).

Since the 2006 Feasibility Study, several circumstances have changed which have necessitated major revisions in the scope of the Sheberghan Gas Field Development Project (SGFDP). The first was an increase in the anticipated nameplate capacity of the power plant from 100 MW to 200 MW, which will significantly increase the gas supplies required, as described below. The second was an increase in the anticipated operating life of the power plant from 20 years to 30 years, which would require an additional 33% more gas. The third was the dedication of several prolific wells, including Gerquduq Well No. 21, and the reserves from the producing gas fields of Yatimtaq, Gerquduq and Khoja Gogerdak to support the NFPP in Mazar-e-Sharif. Finally, the structure of power plant financing has changed from a donor funded plant to an Independent Power Producer (IPP) model based on private investment in the power plant. These changes have resulted in substantial modifications to the original project. Recently, the SGFDP team has recommended to USAID to rehabilitate two wells in the Bashikurd gas field, drill two new wells in the Juma and Bashikurd gas fields, develop the necessary gathering pipelines to bring the gas from the wells to be processed, and secure funding for a gas sweetening plant to remove contaminates from the gas prior to delivery to the power plant. The final technology selection for the power plant has not been made, so a few assumptions will have to be made regarding gas consumption, heating values and other important information. For the purposes of this assessment, we are assuming that a 200 MW power plant will consume about 1.2 MMCM of sweetened gas per day, or 13.1 BCM sweetened gas over its anticipated 30 year operating life. These assumptions are described in more detail below. This section of the assessment deals with the gas field development and necessary infrastructure improvements to

---

[1] The Technical and Economic Feasibility of Development of a Gas-Fired Thermal Power Facility in Sheberghan Afghanistan. Prepared for the Ministry of Energy and Water under the U.S. Agency for International Development Afghanistan Energy Assistance Program. Prepared by Advanced Engineering Associates International, Inc. March 2006.
[2] Id. at Volume I: Overview, 3.1.1: Gas Supply Assessment.
[3] Id.
[4] P50 is a petroleum industry definition meaning that there is an equal likelihood of obtaining either more or less than the specified amount of reserves.

deliver the natural gas to the power plant and includes a preliminary assessment of the Afghan Gas.

1. THE JUMA AND BASHIKURD GAS FIELDS

As stated earlier, AEAI was originally tasked with developing the Yatimtaq, Khoja Gogerdak and Gerquduq gas fields to provide fuel for a 100 – 150 MW power plant. According to a Report prepared by Gustavson Associates,[5] hereafter the "2005 Gustavson Report," a 160 MW power plant, based on previous studies and a modular approach, would have consumed approximately 1.2MMCM per day.[6] This is roughly consistent with AEAI's finding that a 100 MW power plant would take approximately 520,000 cubic meters of gas per day,[7] then doubling the finding to 1.1 million cubic meters per day based on the doubling of the nameplate capacity of the power plant. Averaging out these numbers and looking at other data, AEAI decided to proceed on the assumption that a 200 MW gas-fired power plant would consume 1.2 million cubic meters per day and gas field development plans should account for that amount of gas. Further, once the major producing wells from the three producing gas fields were dedicated to the NFPP in Mazar-e-Sharif by the Ministry of Mines, an alternative source of fuel that could meet the required 1.2 MMCM/day delivery rate and 13.1 BCM total reserve requirement was needed to continue to support the power plant. With these requirements in mind, AEAI reviewed the data on the unproduced fields of Juma and Bashikurd as a potential fuel source for the power plant.

AEAI, through its subcontractor Gustavson Associates, conducted a thorough review of the available Soviet data on the Juma and Bashikurd gas fields. At the same time, USAID has committed to funding the drilling of one or two new exploitation wells based on the recommendations of Gustavson Associates, AEAI and the Hydrocarbon Unit of the Ministry of Mines. On February 3, 2011, AEAI and Gustavson Associates submitted the "Ranking of Potential Wells for Twinning and Cost Estimates" Deliverable to USAID, hereafter the "2011 Gustavson Twinning Report." This report discussed the reasons for selection of the Juma and Bashikurd gas fields and the selection of specific wells in those fields for a program of "twinning," where new wells would be drilled near existing wells to minimize the risk of a "dry hole."[8] The 2011 Gustavson Twinning Report recommended "twinning" two wells: Bashikurd No. 2 and Juma No. 7.[9] Following a site visit in February 2011, and the acquisition of previously unknown data, the 2011 Gustavson Twinning Report was amended to include two specific recommendations: 1) drill new exploitation wells ("twins") at Bashikurd No. 2 and Juma No. 2, and 2) rehabilitate Bashikurd No. 9 and Bashikurd No. 3. While this activity may not provide the full 1.2 MMCM/day required by the IPP, both AEAI and Gustavson Associates are confident

---

[5] Gustavson Associates, Promotion of Oil & Gas Producing Areas to the Private Sector; Grant Agreement No. H007-AF. July 6, 2005.
[6] Id. at II-4, II-5.
[7] See footnote 2.
[8] A "dry hole" is a petroleum industry term meaning that a well was drilled that either did not produce oil or gas, or did not produce in sufficient quantities to maintain the well.
[9] AEAI/Gustavson Associates, Ranking of Potential Wells for Twinning and Cost Estimates, February 3, 2011, p. 12.

that it will prove that sufficient gas reserves exist to support the IPP for its full 30 year operational life and will allow further gas testing necessary for the engineering design of the gas processing plant.

The Bashikurd Gas Field

P90	P50	P10
152.7 BCF	222.4 BCF	297.2 BCF
4.45 BCM	6.48 BCM	8.66 BCM

The Bashikurd Gas Field is located approximately 15 kilometers west of Sheberghan. Geologically, it is located on the eastern end of a large, faulted anticlinal platform that also contains the Juma field. There is a northwest-southeast trending fault zone that separates the two fields and forms a critical element of both fields. The Bashikurd gas field measures approximately 43 square kilometers between the mapped position of the gas-water contact and the fault zone.[10] The volumetric calculations of total gas reserves, according to the 2005 Gustavson Report, are shown in Table 1.[11] Gustavson Associates further refined their figures in the 2011 Gustavson Twinning Report to suggest that the P50 value for the total Jurassic gas reserves for the Bashikurd gas field was estimated at 6.65 BCM.[12] Further, Gustavson estimated the remaining reserves of sweetened gas to be 5.99 BCM, which they obtained by reducing the P50 estimated Jurassic reserves by 10.37% (the estimated concentration of acid gas[13] in the reserves). The gas reserves in the Bashikurd field are estimated, according to Soviet production tests, to contain between 0.23 and 0.7 percent hydrogen sulfide, with the most likely concentrations of approximately 0.44 percent.[14] Carbon dioxide concentrations are estimated to range between 4.2 percent and 10 percent, again according to Soviet production tests, with the most likely concentration at 9.43 percent.[15] The high concentrations of carbon dioxide and hydrogen sulfide in the gas are sufficient to classify the gas in Bashikurd as sour. The location of the Bashikurd Gas Field is also noted on the map in Figure 1.

The Juma Gas Field

P90	P50	P10
470.9 BCF	741.1 BCF	1,170.5 BCF
13.7 BCM	21.6 BCM	32.28 BCM

The Juma Gas Field is located approximately 25 kilometers west of Sheberghan. Geologically, it is located on the west side of the large, faulted anticlinal platform, directly across from the Bashikurd Gas Field. Juma also contains a separate fault along the southern edge of the field. The Juma Gas Field measures approximately 69 square kilometers from the mapped gas-water contact to the fault separating it from the Bashikurd field. The volumetric calculations of total gas reserves, according to the 2005 Gustavson Report, are

[10] See 2005 Gustavson Report, p. I-76 to I-80.
[11] See 2005 Gustavson Report, p. I-80, figure 1-36: Distribution of Total Gas In Place, Bashikurd Field
[12] 2011 Gustavson Twinning Report, p. 5.
[13] "Acid Gas" is a petroleum industry term referring to natural gas with high concentrations of carbon dioxide and/or hydrogen sulfide.
[14] See 2005 Gustavson Report, p. I-79.
[15] Id.

shown in Table 2.[16] Based on reserve estimates, the Juma field is the largest of the discovered gas fields in the Sheberghan area. The 2011 Gustavson Twinning Report suggested that, after removing the acid gas, the total remaining Jurassic reserves of sweetened gas, at P50 distribution, for Juma would be 19.22 BCM.[17] The Juma gas field is expected to contain hydrogen sulfide concentrations between 0.088 and 4.6 percent, with the most likely concentration at 0.72 percent.[18] Juma is anticipated to contain carbon dioxide concentrations of 0.22 percent to 8.22 percent, with the most likely concentration at 4.2 percent.[19] The hydrogen sulfide and carbon dioxide concentrations in Juma are estimated by Gustavson Associates based on the data from similar reserves in Bashikurd and will be verified once equipment is available to conduct proper gas composition analysis. As with the Bashikurd gas field, the concentrations of carbon dioxide and hydrogen sulfide are high enough to classify the gas in the Juma field as sour. At P90 distribution, which was estimated to be 12.21 BCM of sweetened gas, the Juma field could almost support the demand needs for the power plant independently.[20]

2. THE GAS FIELD DEVELOPMENT PROPOSAL

Initially, AEAI recommended drilling one or two new wells, based on the information presented in the 2011 Gustavson Twinning Report, to verify the gas reserves and composition estimates in the Juma and Bashikurd Gas Fields. USAID will be supporting this drilling work with $30 million, provided to the Ministry of Mines through an on-budget host country contracting mechanism. The 2011 Gustavson Twinning Report estimated the total cost of drilling a total of two new wells in the Juma and Bashikurd gas fields to be $13.3 million per well, with an additional $3.8 million in mobilization/demobilization costs and $500,000 for the move between the wells, for a total of approximately $31 million for the drilling project.[21]

However, based on a site visit and the acquisition of new data from Afghan Gas and the Northern Directorate of the Hydrocarbon Unit, Gustavson Associates has amended their report to suggest that rehabilitation work could be completed on two additional wells. These wells, in the Bashikurd gas field, are good candidates for a workover program and could provide additional gas supplies for the IPP without the significant investment of a drilling program. In addition to learning about the workover candidates, Gustavson has changed targets for the "twinning" work, replacing Juma No. 7 with Juma No. 2. AEAI and Gustavson are in agreement that these options represent the best possibilities for developing a new

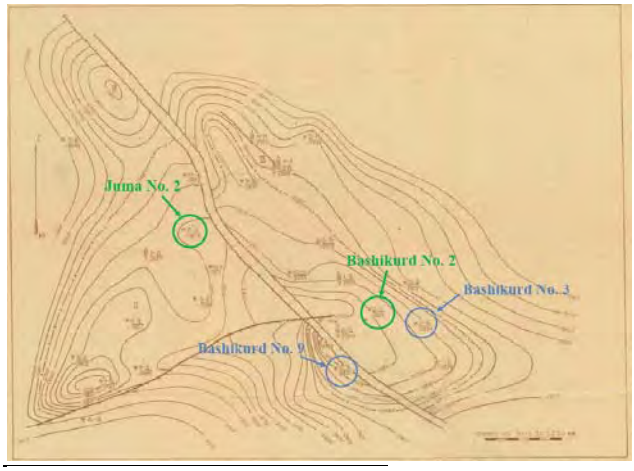

Figure 1. Candidate Wells for USAID Project

[16] See 2005 Gustavson Report, p. I-85, Figure 1-39 Distribution of Total Gas Reserves, Juma Field.
[17] See 2011 Gustavson Twinning Report, p. 7, Table 2: Field Summary.
[18] See 2005 Gustavson Report, p. I-83.
[19] Id.
[20] Id.
[21] 2011 Gustavson Twinning Report, p. 4.

reserve and delivering the required gas to the IPP.

The current proposal by AEAI and Gustavson Associates is to "twin," or drill new wells next to existing wells, Bashikurd No. 2 and Juma No. 2 (shown in green on the map in Figure 1). AEAI and Gustavson Associates also recommend that Bashikurd No. 3 and Bashikurd No. 9, shown in blue on the map in Figure 1, be developed as workover candidates to provide more information on the field. The particular reasons for the well recommendations are discussed in detail below. Gustavson is recommending in their amended 2011 Twinning Report that the rehabilitation work on Bashikurd No. 3 and Bashikurd No. 9 be completed prior to drilling the new wells near Bashikurd No. 2 and Juma No. 7.[22]

The total cost for the drilling program is estimated at $31 million, including mobilization, demobilization and transportation for the rig.[23] The additional rehabilitation work is estimated to cost an additional $6 million.[24] The total cost for both the rehabilitation work and the drilling work is estimated at $37 million, though the price may be higher or lower depending on the bids received during the tender.

3. WELL INFORMATION

This section of the Assessment provides as much information as possible on the four primary wells that AEAI and Gustavson have recommended to be the targets of USAID and MoM rehabilitation and drilling efforts, Bashikurd No.2, Juma No. 2, Bashikurd No. 3 and Bashikurd No. 9. It also contains information on other wells in the Juma and Bashikurd fields that further supports the selection of these particular fields as the fuel supply for the 200 MW IPP. Unless noted otherwise, all of the wells in Juma and Bashikurd were plugged and abandoned following the Soviet withdrawal. Almost all of the original data for these wells is in Russian and was collected prior to the Soviet withdrawal from Afghanistan in 1989. The information contained in this section represents the key characteristics of the wells, but should be viewed as a baseline reference only, as much of the data has not been independently verified.

[22] See Amended 2011 Gustavson Twinning Report, p. 8.
[23] Id.
[24] Id.

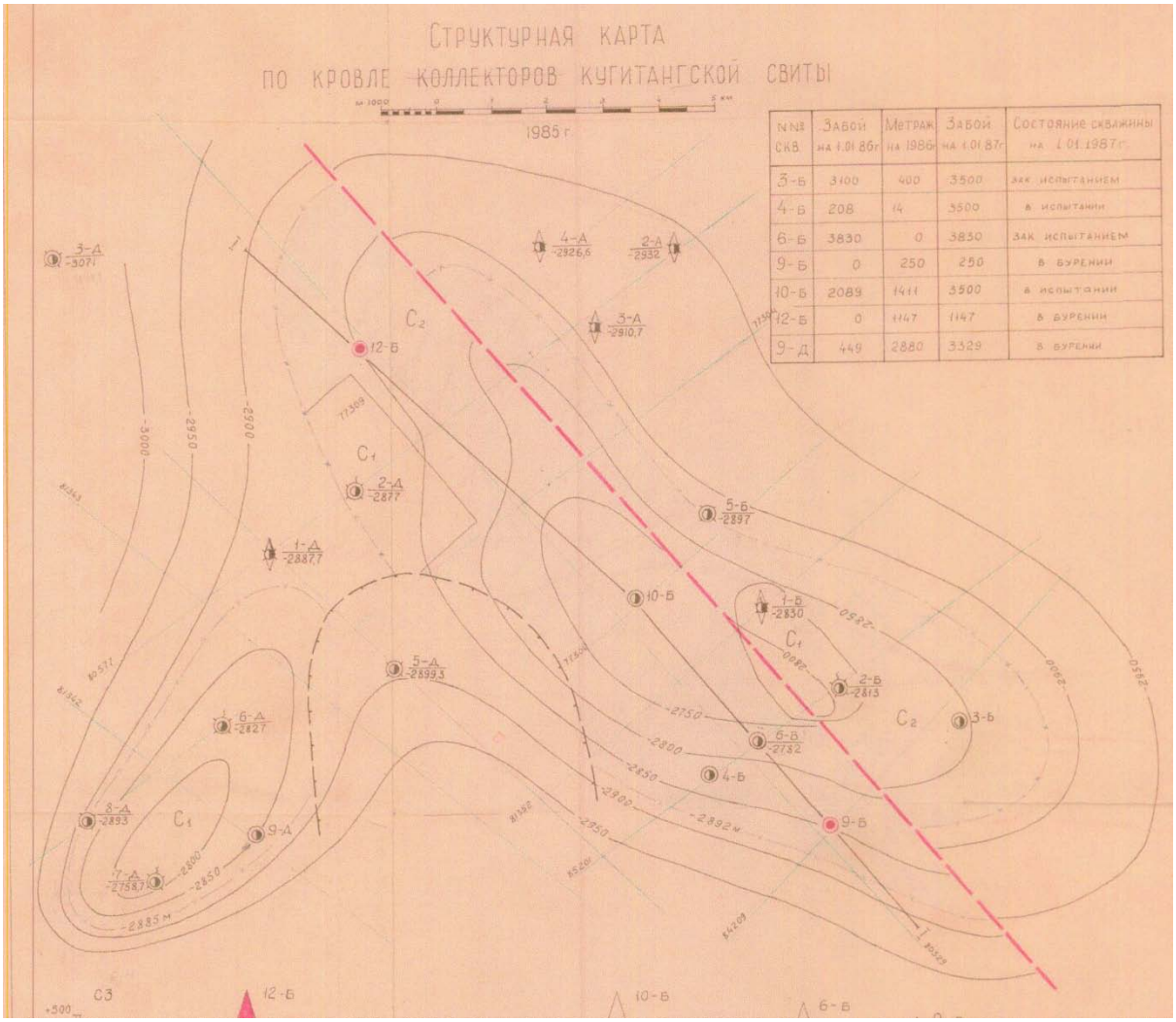

Figure 2. Structure Map of Juma & Bashikurd Gas Fields

Well numbers are written in the following format: Д-X or Б-X. The lettering comes from the Russian names for the fields: Джума – Juma, Башикурд – Bashikurd. The well designation Д-2 then would refer to Juma No. 2.

Bashikurd No. 2

This well is one of the "twinning" candidates identified in the 2011 Gustavson Twinning Report.[25] Bashikurd No. 2 is located at 36 degrees, 70 minutes North, by 65 degrees, 75 minutes East. The well was drilled to a total depth of 3460 meters and was designed as an exploration well. Soviet data tests showed a gas flow rate of 520,000 cubic meters per day. After accounting for the removal of the hydrogen sulfide and carbon dioxide from the gas, the total estimated supply of sweetened gas per day from Bashikurd No. 2 would be 469,000 cubic meters. Soviet data tests also showed a gas composition of 0.55 percent hydrogen sulfide and 9.15 percent carbon dioxide. Bashikurd No. 2 is highlighted in green on the map in Figure 1.

[25] See 2011 Gustavson Twinning Report, p. 9, Table 3: Well Ranking Summary.

Juma No. 2

This well was not originally identified as a "twinning" candidate by the 2011 Gustavson Twinning Report, but was added via an amendment to the original report following a site visit in February of 2011.[26] Juma No. 2 is located on the western side of the fault line between the Bashikurd and Juma gas fields. The well was designed as an exploration well. Soviet testing showed very high pressures in the well and a gas flow rate of 768,000 cubic meters per day. The gas composition tests conducted by Soviet engineers showed hydrogen sulfide levels at 0.72 percent and carbon dioxide levels at 8.22 percent. After accounting for the removal of the hydrogen sulfide and carbon dioxide, the total estimated supply of sweetened gas per day from Juma No. 2 would be 700,000 cubic meters per day. Juma No. 2 is highlighted in green on the map in Figure 1.

Bashikurd No. 9

This well was identified in the amended 2011 Gustavson Twinning Report as a good candidate for a workover program.[27] The well is located at 36 degrees, 67 minutes North by 65 degrees, 53 minutes East. Bashikurd No. 9 was drilled and cased with corrosion resistant production casing, but was never perforated.[28] The workover program would consist of well re-entry, clearing obstructions (if any) in the well bore, perforation and testing of the Jurassic reservoir.[29] Bashikurd No. 9 was drilled to a depth of 3300 meters. The initial test done by Soviet engineers showed a gas flow rate of 120,000 cubic meters per day and hydrogen sulfide concentrations of 1.3 percent.[30] However, this information will likely be substantially revised once the testing program is complete following the workover on the well. Bashikurd No. 9 is highlighted in blue on the map in Figure 1.

Bashikurd No. 3

This well was also identified in the amended 2011 Gustavson Twinning Report as a good candidate for a workover program.[31] The well is located at 36 degrees, 69 minutes North by 65 degrees, 58 minutes East. Bashikurd No. 3 was drilled to a depth of 3,345 meters, but the technical casing string ended at approximately 3,000 meters. The high pressure encountered indicated the presence of enough gas reserves that the well could be converted to an exploitation well. The necessary corrosion resistant production casing was not available, so the well was never completed. The workover program involves drilling and casing to approximately 3,500 meters followed by perforation and production tests.[32] The limited information on the gas flow rate shows only 62,000 cubic meters per day,[33] but more information will be available once the workover and testing programs are completed. Bashikurd No. 3 is highlighted in blue on the map in Figure 1.

---

[26] See Amended 2011 Gustavson Twinning Report, p. 8.
[27] Amended 2011 Gustavson Twinning Report, p. 12.
[28] Id.
[29] Id.
[30] Amended 2011 Gustavson Twinning Report, p. 9.
[31] Amended 2011 Gustavson Twinning Report, p. 12.
[32] Id.
[33] Amended 2011 Gustavson Twinning Report, p. 9.

Juma No. 7

Juma No. 7 is located on a structure in the southwestern corner of the Juma gas field. The well was drilled to a depth of 3,409 meters. Soviet tests showed gas flow rates of 435,000 cubic meters per day, hydrogen sulfide concentrations of 0.11 percent and carbon dioxide concentrations of 7.35 percent. Based on this information, the estimated sweetened gas supply from Juma No. 7 would be approximately 403,000 cubic meters per day.[34] However, there is conflicting information, based on two different gas flow and composition tests, regarding the gas composition. One test in 1979 showed methane content at only 59 percent, while another test in 1989 showed a methane content of nearly 90 percent.[35] We believe the test results of 1989 to be accurate as the other wells that are close by have similar gas composition. However, production testing will be required to verify gas composition and flow rates.

Bashikurd No. 10

Bashikurd No. 10 was drilled to a depth of 3397 meters and is located at 65 degrees, 51 minutes North by 36 degrees, 71 minutes East. Soviet well testing data showed a gas flow rate of 446,000 cubic meters per day, hydrogen sulfide composition of 0.70 percent and carbon dioxide composition of 9.49 percent.[36] The well was designed as an exploration well. The estimated sweetened gas supply would be 400,000 cubic meters per day.[37] The well was plugged and abandoned, but could be brought back into production following an analysis of the well and after completing a workover program.

Juma No. 9

Juma No. 9 is located near Juma No. 7 on the southwestern edge of the Juma gas field. Juma No. 9 was designed as an exploitation well and was drilled to a depth of 3503 meters. Soviet test data showed a gas flow rate of 291,000 cubic meters per day, hydrogen sulfide concentration of 0.77 percent and carbon dioxide concentration of 6.48 percent. The estimated sweetened gas supply would be approximately 270,000 cubic meters per day. Similar to Bashikurd No. 10, Juma No. 9 was plugged and abandoned but could be brought back into production following an analysis of the well and after completing a workover program.

4. LOCAL ENVIRONMENTAL AND INFRASTRUCTURE INFORMATION

[The following section contains excerpts taken directly from the Initial Environmental Examination Report (IEE) that was be submitted on March 30, 2011. For more detailed information on the project area, see that report.]

The topography around the project site is part of an extensive loess covered plain which abuts the foothills of the Hindu Kush to the south and extends across the

---

[34] Id.
[35] See Id. at p.9, Note 3.
[36] Amended 2011 Gustavson Twinning Report, p. 9.
[37] Id.

border into Turkmenistan and Uzbekistan to the north. Loess comprises fine soil particles that are transported by the prevailing northwest wind from the central Asian plains and deposited at the foot of the mountains where wind speed is slowed by relief. The plain is gently rolling or flat with elevations ranging between 350 and 550 m. The Sar-e-Pul River valley dissects the plain approximately 15 km from Sheberghan. The main soil type at the project site is loessy loam. Loess soils generally have excellent permeability and can absorb large quantities of water. Soils in the Northern Plan are prime agricultural soils and the Mazar-e-Sharif region is the main food-producing area in Afghanistan.

The targeted gas fields are located within approximately 20 km of Sheberghan. Land utilization within and near the project site consists of residences along the A76 highway 3 km to the east, and small agricultural plots at the western edge of the gas fields. Since the targeted gas fields have never been produced, there is no existing wells, pipelines, or processing facilities. No existing or proposed cultural or environmental protected areas are found in or near the gas fields.

The geology of the area comprises Neogene and Quaternary (Pleistocene) sediments comprising loess beds tens of meters thick, overlying alternating layers of pebbles/gravels, sands, silts and clays. The sediments represent the products of erosion of the mountains. Modem alluvial deposits occur along the river valleys. The Quaternary sediments overlie Mesozoic limestones, conglomerates, sandstones, siltstones, and shales extending to several kilometers depth. The Mesozoic rocks are gently folded and faulted forming the reservoir strata and structures for the region's natural gas resources. The Mesozoic rocks are exposed to the south in the foothills of the Hindu Kush. The area is seismically active being adjacent to the northern edge of the Hindu Kush where orogenic processes are active. The region has a history of strong earthquakes, over 5.8 on the Richter scale.

The climate of the Sheberghan region is dry subtropical with wide annual daily temperature variations. Winter (December to February) is mild, mostly cloudy, and has mean monthly minimum and maximum temperatures of -1.5 to 1.5 °C and 7 to 10 °C, respectively. Cold winter winds and clear weather can cause temperatures to fall to as low as -22 °C for short periods. Precipitation falls 4 to 6 days per month as rain and occasionally snow; however, fallen snow melts quickly. Spring (March and April) is characterized by rapid daytime warming and precipitation is brief afternoon downpours. Rainfall is highest during March averaging 56.4 mm per month. Average annual rainfall is 231 mm. Summer (May to September) is hot and dry with mean monthly maximum and minimum temperatures of 30 to 39 °C and 14 to 22 °C, respectively. Daytime temperatures of 45 °C can occur. Daytime relative humidity during summer does not exceed 25 to 30% and rain is very rare. Fall (October and November) begins clear and dry then turns cloudy and rainy. Days in fall are warm and nights are cool.

Winds are primarily northwesterly and southeasterly. East winds are also common in winter and fall. Prevailing wind speeds are 2 to 3 m/s. Rare strong winds (up to 20 m/s) occur in late spring or early summer and usually result in dust storms, reducing visibility to several meters.

Ambient air quality at the project sites is likely to be good based on the following characteristics: (1) sites are in a semi-desert area approximately 15 – 20 km from Sheberghan City, where industries are the nearest potential sources of air pollution;

and (2) the sites are relatively exposed topographically and not prone to atmospheric inversion. However, particulate material concentrations are likely to be high throughout the region given the prevailing winds and soil transport characteristics.

The natural vegetation around the project site is semi-desert. Ground cover is sparse, consisting of drought resistant grasses including needle grass, sheep fescue, blue grass, and sedge. Grasses usually die back by mid-summer and the landscape takes on a desert appearance. Arable land in the Sar-e-Pul valley located at the western edge of the productive gas fields is planted with grain including wheat, barley, and corn.

5. FIELD INFRASTRUCTURE

Field Infrastructure Project	Estimated Cost
Gas Well Rehabilitation/Drilling Activity	$37,000,000
Natural Gas Gathering Lines	$1,300,000
Gathering Manifold/Knockout Separator	$2,000,000
Pipeline from Bashikurd Gathering Manifold to Processing Plant at Gerquduq	$6,585,000
Total Projects: 5	Total Cost: $46,885,000

Drilling and completing wells is only the first step in the production sequence. In addition to the wells, additional infrastructure will be required in the field to begin processing the gas and moving it from the wells to the processing facility. AEAI has identified several pieces of key infrastructure to complete development of the gas fields and has estimated the procurement and construction costs. Gathering lines will be required to move the sour gas from the wellhead to a collection point to be fed into a pipeline. This collection system will include internally-coated gathering lines, a knockout separator, a gathering manifold and an internally-coated pipeline to deliver gas to the processing plant. The internal coating is required to protect the pipes from corrosion due to the high carbon dioxide and hydrogen sulfide concentrations, which were obtained from estimates in the 2005 Gustavson Report.[38] The costs provided in this section are approximate and may differ based on the design of the field development and updated information on gas pressure and composition that will be available once drilling and rehabilitation work is complete. AEAI is estimating these costs based on the minimum amount of infrastructure needed to begin the delivery of gas from the fields to the processing plant and ultimately to the IPP. The overall cost of nearly $47 million is significant because USAID has a funding commitment of $30 million for this activity. This leaves a funding gap of $17 million that must be paid for either through donor funds or through some arrangement with the Afghan Government. These numbers also assume that the drilling and rehabilitation work undertaken by MoM and funded by USAID will provide sufficient gas resources to provide the 1.5 MMCM per day to the gas processing plant.

Natural Gas Gathering Lines

AEAI received an estimated cost of $65.98 per meter for 8-inch diameter seamless, internally coated steel pipe designed for sour gas service.[39] Assuming that 8-inch diameter pipe will be needed for the gathering lines, the cost for the pipe only will be $65,980.00 per kilometer. Installation, customs clearances and transportation costs will increase the price by roughly 30 percent, leading to a final price of $85,774 per kilometer. Based on the distances between wells in the field and the anticipated point for the gathering manifold (approximately 15 kilometers), AEAI is estimating that the cost of the natural gas gathering system for the four primary well candidates will be roughly $1,286,610 million. Adding a 10 percent contingency budget, the total project cost is estimated to be $1,415,271.

[38] See 2005 Gustavson Report, p. I-79, I-83.
[39] Price quote received via email from Raymond International Group, pipe was F.O.B. China port.

Natural Gas Gathering Manifold & Knockout Separator

The natural gas gathering lines will collect the gas from the individual wells and transport it to a gathering manifold which will include a knock-out separator to remove free liquids from the gas. After the free liquids and heavier hydrocarbons are removed, the sour gas will be fed into the pipeline for transportation to the gas processing plant for further refining. This equipment is part of the mandatory field development equipment and must be completed in order to provide gas to the processing plant. The gathering manifold will also contain the chromatograph to conduct gas composition analysis prior to feeding the gas into the pipeline to the processing plant. Based on the anticipated necessary production from the field, the gathering manifold and knockout separator must be able to handle a minimum of 1.5 MMCM/day in order to provide sufficient gas supplies to the processing plant. The gathering manifold and knockout separator will also need to be internally coated to resist the corrosive properties of sour gas. SGFDP team experts estimate the cost of this piece of equipment at $2 million, after including factors for sour gas service, waste disposal and enhanced safety features.

Pipeline from Bashikurd Gathering Manifold to Gas Processing Plant

The Task Force for Business and Stability Operations (TFBSO) has commissioned the construction of a 12 inch natural gas pipeline between the Khoja Gogerdak gas field and the NFPP facility outside of Mazar-e-Sharif . The total distance for the pipeline is approximately 89 kilometers. According to the TFBSO representatives, the total estimated cost for the project, including the procurement of pipe, construction of the pipeline, and testing and oversight, will be $26 million. Of that amount, the steel pipe for the pipeline is estimated at $8 million, with the remaining cost of $18 million going to construction, oversight, logistics, and other operations. Based on these figures, the TFBSO pipeline will cost roughly $290,000 per kilometer.

Doing the calculations another way, based on the TFBSO estimates for their pipeline, there is a pipeline to total project cost ratio of 3.25 ($26 million divided by $8 million). AEAI received an estimated cost of $109 per meter for F.O.B. uncoated, 12 inch diameter seam pipe.[40] This equates to $109,000 per kilometer for the pipeline, excluding transportation costs. Internally coating the pipe to resist corrosion from sour gas will increase the cost of the pipe by 20 percent. Seamless pipe, designed to withstand higher pressures, increases the cost by a further 10 percent. Therefore, F.O.B. internally coated, seamless 12 inch diameter pipe is estimated to cost $141,700 per kilometer. In addition to the special requirements for the pipe, AEAI is factoring in an additional 30 percent for transportation costs, customs clearances, and other factors. The final cost per kilometer of internally coated, seamless 12 inch diameter line pipe on site is estimated at $184,210.

Based on these costs, a ten kilometer pipeline from the southeastern edge of the Bashikurd Gas Field to the anticipated site of the gas processing plant on the northwestern edge of the Gerquduq Gas Field would be $1,842,100, for the pipe only. Using TFBSO's project cost to pipe cost ratio of 3.25, the total cost of the

[40] Price quote received via email from Raymond International Group, pipe was F.O.B. China port.

installed pipeline would be $5,986,825. Adding a contingency budget of 10 percent, the total project cost is estimated at $6,585,507. This cost is only for the pipeline necessary to transport the sour gas collected from the Bashikurd and Juma Gas Fields to the gas processing plant.

6. GAS PROCESSING PLANT

The gas produced from the Juma and Bashikurd gas fields will be "sour gas," meaning it will have a concentration of hydrogen sulfide greater than 5.7 mg per cubic meter.[41] In addition to hydrogen sulfide, Soviet-era data on the Jurassic reserves suggest that the gas contains a high concentration of carbon dioxide (greater than eight percent).[42] There are also other elements and compounds naturally present in the raw natural gas from the gas wells including nitrogen, water, ethane, butane, pentane and other heavier hydrocarbon molecules. Before the natural gas can be used by the power plant, it must be processed to remove these impurities and refined to deliver a consistent heating value.

The raw gas will pass through a knockout separator at the gathering manifold in the gas field, which will remove some water and condensate from the gas prior to its transportation to the gas processing plant. Once it arrives at the gas processing plant, the gas will be dehydrated to remove water vapor and passed through a liquid desiccant (monoethanolamine or diethanolamine) to remove the "acid gas" compounds of hydrogen sulfide and carbon dioxide. The gas will also be processed to remove some of the ethane, butane and other hydrocarbons, depending on the required heating values of the gas. A detailed diagram of an amine gas processing plant is shown in Figure 2. The heating values, composition, pressure, dew point and other composition details, as well as the price, of the gas will be specified between the gas purchaser, in this case the IPP, and the gas supplier, Afghan Gas, in the Gas Supply and Purchase Agreement (GSPA).

[41] http://www.naturalgas.org/naturalgas/processing_ng.asp. Last accessed: 05 February 2011.
[42] See 2011 Gustavson Twinning Report, p7, 9.

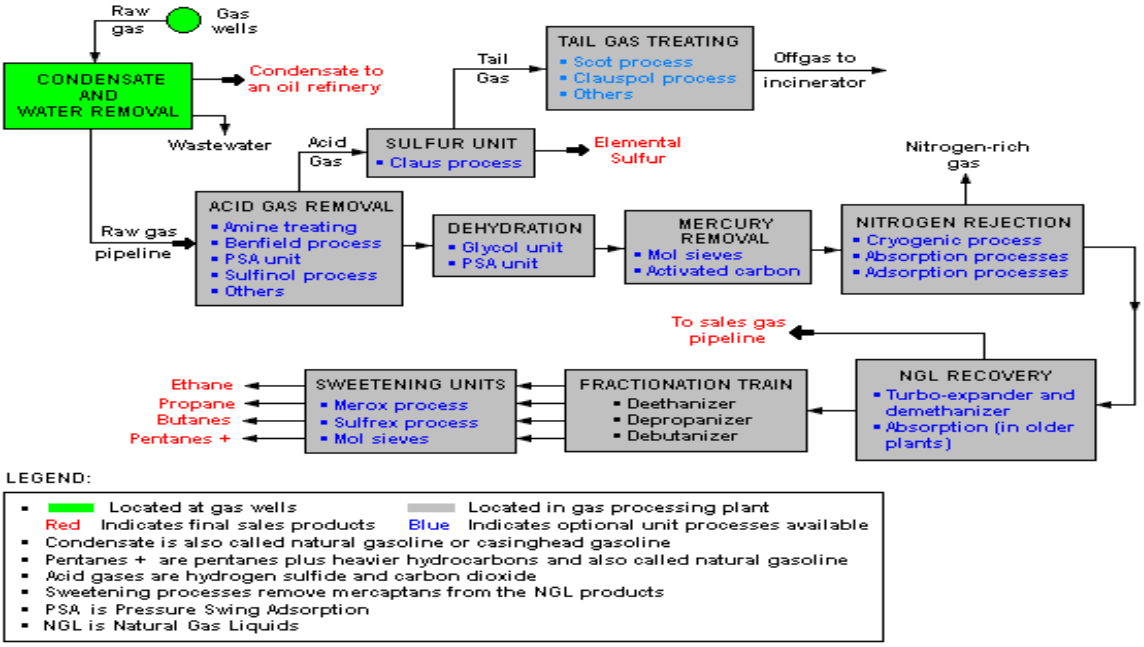

Figure 3. Natural Gas Processing Plant Diagram[43]

The gas processing plant that will supply pipeline quality gas to the power plant will require a significant capital investment. The existing gas processing plant at Gerquduq has not been operational since 1989 and twenty years of idle operation has resulted in significant deterioration of the facility. In several reports written by different consultants, there was unanimous agreement that rehabilitation of the existing gas processing facility would not be economically feasible.

The power plant is expected to need 1.2 MMCM, or 13.1 billion cubic meters over its anticipated 30 year operational life. The gas processing plant would have to be designed for at least 1.5 MMCM per day to account for system losses and the fact that the plant will not be running at 100 percent capacity all the time. The 1.5 MMCM per day capacity would also be roughly double the capacity of 861,600 cubic meters per day anticipated by AEAI in the 2006 Feasibility Study for the gas processing plant.[44] The processing plant would be located near the site for the IPP and the ADB gas processing plant on the northern edge of the Gerquduq gas field, which is south of the City of Sheberghan.

AEAI's 2006 Feasibility Study found that the capital cost for a gas processing plant would be $34,980,000.[45] However, the gas processing plant in the study was designed to fuel a 100MW gas-fired, thermal power plant that would operate for 20 years. The expected nameplate capacity of the power plant has since been increased to 200MW, effectively doubling the amount of gas that would be required. Further, the capital cost estimated by AEAI in the 2006 Feasibility Study relied on a

---

[43] http://schools-wikipedia.org/wp/n/Natural_gas.htm. Last accessed: 19 March 2011.
[44] See The Technical and Economic Feasibility of Development of a Gas-Fired Thermal Power Facility in Sheberghan, Afghanistan. Appendix R: Gas Conditioning Plant Technical Specification, Table 4: Anticipated Gas Processing Rate, p. 75. November 2005.
[45] The Technical and Economic Feasibility of Development of a Gas-Fired Thermal Power Facility in Sheberghan, Afghanistan. Appendix P: Cost Estimates. March 2006.

blend of sweet gas from Yatimtaq Cretaceous reservoirs and sour gas from Gerquduq and Khoja Gogerdak Jurassic reservoirs. Gas processing plants are designed to processes a specific blend of natural gas, so with the change in fields and reliance on Juma and Bashikurd Jurassic reservoirs, the estimated cost may increase to cover the additional processing requirements including the increased quantity of gas, extended operating life, waste disposal options and different composition of the raw gas being processed. The capital costs for gas processing do not increase linearly with the amount of gas processed. Initially, the changed circumstances from the 2006 Feasibility Study suggested that a rough 40% increase in cost would be reasonable. Based on that assumption, the capital cost for the gas processing facility would have increased to approximately $50,000,000, with no inclusion of contingency costs and premiums for security and other factors.

However, an increase in commodity prices such as steel over the past five years suggest that even the 40% increase in cost may be too low. For example, in March of 2006, when the previous AEAI Feasibility Study was submitted, the price for cold rolled steel was $750.00 per ton.[46] After spiking between June 2008 and February 2009 at $1,100 per ton, prices for cold rolled steel dropped to $700 per ton for most of 2009.[47] The price currently stands at $850 per ton, and has been stable since May of 2010.[48] These commodity shifts are important factors in the capital construction costs for the gas processing facility, particularly the costs of steel, which will be the main component of the gas processing plant construction. After reviewing additional data on commodity prices and costs of other plants in the United States[49] and Canada, the cost of the gas processing plant could increase by as much as 70 percent from the original estimate provided in 2006. This could increase the estimated capital costs of the gas processing plant to $59,466,000.00.

Gustavson Associates is currently preparing a preliminary engineering study for a gas sweetening plant to process gas from Gerquduq to send to the NFPP in Mazar-e-Sharif. The sweetening plant is anticipated to provide approximately 850,000 to 900,000 cubic meters of sweet gas per day. ADB has committed to fund the sweetening plant, and the preliminary engineering study should be completed by the end of July 2011. Once this feasibility study and preliminary engineering work is completed, USAID and other donors will have more data to develop a better cost estimate for the gas processing plant for the IPP. Further, once the drilling/workover program is complete for the wells in Juma and Bashikurd, the testing program for the wells will provide the necessary composition and other details of the raw gas that will be provided to develop the preliminary engineering design for the sweetening plant.

---

[46] http://www.indexmundi.com/commodities/?commodity=cold-rolled-steel&months=60. Last accessed: 07 March 2011.
[47] Id.
[48] Id.
[49] See http://www.encana.com/news/newsreleases/2011/0118-encana-fort-lupton.html. A recent press release from Encana described the sale of a 2.5 MMCM processing facility in Fort Lupton, CO. The buyer paid a total of $303 million for the facility. Using the sale price as a rough estimate, the price would be $121.20 per cubic meter of gas processing capacity. Recalculating that amount to a 1.5 MMCM processing facility such as the one proposed for the IPP would lead to a total cost of approximately $181.8 million. The price can be skewed by the high costs of regulatory compliance, particularly on the environmental requirements, in the United States and some other factors, but the calculations show that the actual price estimates for gas processing can vary widely based on a number of factors specific to the particular requirements of the situation.

Waste Stream Options

One of the major concerns with a 1.5 MMCM/day processing plant is the disposal of the impurities removed from the gas stream. The amine process will remove the carbon dioxide and hydrogen sulfide from the natural gas, creating pipeline quality natural gas that can be utilized by the IPP. However, the waste stream of carbon dioxide and hydrogen sulfide presents a significant disposal problem for the processing plant. Hydrogen sulfide is a toxic and highly flammable gas associated with hydrocarbon production.[50] Hydrogen sulfide can be deadly in concentrations above 100 ppm[51] and, when burned, combines with oxygen to produce sulfur dioxide, a poisonous gas known to cause acid rain. Hydrogen sulfide is also corrosive to pipelines, well equipment and gathering systems and sour gas requires special handling and equipment. There are several ways of disposing of the "acid gas" stream (containing hydrogen sulfide and carbon dioxide), including flaring, reinjection and sulfur recovery.

Flaring

Gustavson Associates did an analysis of the concentration of SO2 that would be present in the exhaust gas from a sweetening plant if the acid gas stream was burned or flared. The heat content of the stream to be disposed would have to be at least 300 BTU per standard cubic foot (SCF) in order to burn. The estimated acid gas stream from a plant processing Bashikurd gas would consist of about 5% H2S and 95% CO2, with a heat content of only about 28 BTU/SCF. Further, the estimated acid gas stream could be blended with methane from the sweetening plant in a proportion of 28% methane to 72% acid gas stream (5% H2S/95% CO2) to get the heat content up to 300 BTU/SCF. If the blended stream was burned with air, the concentration of SO2 in the exhaust gas would be about 25 grams per normal cubic meter (Nm^3). This would far exceed the World Bank standard of 1 g / Nm^3.[52]

Reinjection of Acid Gas Stream

In addition to flaring, the acid gas stream can be reinjected into an underground formation for either temporary or permanent disposal. The waste gas stream from the gas processing plant, composed primarily of carbon dioxide and hydrogen sulfide separated during the amine process, is reinjected into a depleted well or other suitable underground formation at high pressure for long term storage. There are several examples of this practice in the United States, and it is an alternative to expensive elemental sulfur recovery or flaring. There are several key issues that must be resolved before reinjection of the waste stream is considered as an acceptable alternative.

Initially, Afghan Gas and the processing plant engineers will need to find a suitable site and geological structure for reinjection. Identification of a suitable geological structure will require a detailed seismic study of candidate sites. It is anticipated by the parties that the gas processing plant will be located in or near the Gerquduq gas

---

[50] http://www.osha.gov/OshDoc/data_Hurricane_Facts/hydrogen_sulfide_fact.pdf. Last accessed: 02 March 2011.
[51] Id.
[52] World Bank, Pollution Prevention and Abatement Handbook, p. 361. 1998.

field. While some seismic work was done by Afghan and Soviet engineers prior to the Soviet withdrawal in 1989, the seismic work was focused on finding and exploiting natural gas reserves. The type of study required to identify suitable reinjection sites is much more detailed and will require more specialized equipment. One of the key concerns is leaking or migration of the injected waste stream, which can result in contamination of the entire field if the wells are communicating. A suitable structure should be an isolated depleted gas well and should be able to handle the pressures and have the capacity to store a substantial amount of waste over the operating life of the processing plant. By locating the proposed gas processing plant in the Gerquduq gas field, there is a possibility that one or more of the depleted gas wells could serve as viable candidates for the reinjection. However, even if a suitable structure and well can be identified, the well equipment will likely need to be redesigned or replaced to handle the extremely corrosive and toxic waste stream from the processing plant.

Reinjection could be an expensive proposition, particularly if multiple wells are needed to handle the volume of waste coming from the gas processing plant. Gustavson Associates estimated that for another processing plant being built in the area, an injection well will cost approximately $13 million. Each well will have to be engineered to handle the waste stream, and each structure will have to be carefully analyzed and monitored to prevent contamination of the other reservoirs in the gas field or the water tables. The cost of reinjection could be moderated through a combination of flaring and reinjection. Such a system would flare part of the acid gas stream up to the World Bank and ADB environmental limits, then inject the remainder of the waste stream. The advantage of a split system is that it may require fewer wells for the reinjection of the waste stream and the flaring option is by far the cheapest means of disposing of the carbon dioxide and hydrogen sulfide.

Sulfur Recovery

In addition to flaring and reinjection, another method of processing the waste gas stream from the gas processing plant is to recover elemental sulfur using the Claus process. After the raw natural gas is treated using the amine solution, the amine is regenerated for reuse in the processing plant. During the regeneration process, heat and steam is used to reverse the amine reaction with carbon dioxide and sulfur dioxide. The two gasses are then recovered from the steam and sent on for further processing or incineration in a flare stack.[53] The regenerated amine is processed further and ultimately sent back through the gas stream to begin the process again. In this way, the amine is recycled through the plant in a closed loop system.[54] The carbon dioxide from the stream is vented to the atmosphere or recovered for a variety of industrial purposes, including secondary recovery efforts. The hydrogen sulfide can be recovered using the Claus process.

The Claus process recovers elemental sulfur from the acid gas stream after the hydrogen sulfide is removed from the rich amine solution. In order to utilize the Claus

---

[53] Mokhatab, Saeid, William A. Poe, James G. Speight. Handbook of Natural Gas Transmission and Processing. Page 278-279. Gulf Professional Publishing/Elsevier, Inc. Burlington, MA/Oxford, UK. 2006.
[54] Id at 278-281.

process, the gas stream can have no more than 15 percent hydrogen sulfide. In the Claus process, the hydrogen sulfide is burned in a reaction furnace with air from the outside to form sulfur dioxide and water vapor. The second part of the process, also called the catalytic stage(s), uses a catalyst to convert sulfur dioxide and additional hydrogen sulfide into elemental sulfur and water vapor. Naturally, more catalytic stages result in an increase in the efficiency of the process. A two stage catalytic conversion process results in efficiencies of 90 to 96%, while a three stage catalytic conversion process results in efficiencies of 95 to 98%. It is important to note that this process does not completely convert hydrogen sulfide and sulfur dioxide, and some emissions of these compounds must still be incinerated in a flare stack at the conclusion of the process. A tail gas clean up unit may be installed to convert the remainder of the hydrogen sulfide and sulfur dioxide and prevent any release of the compounds, but these units can cost as much as a Claus process plant.[55]

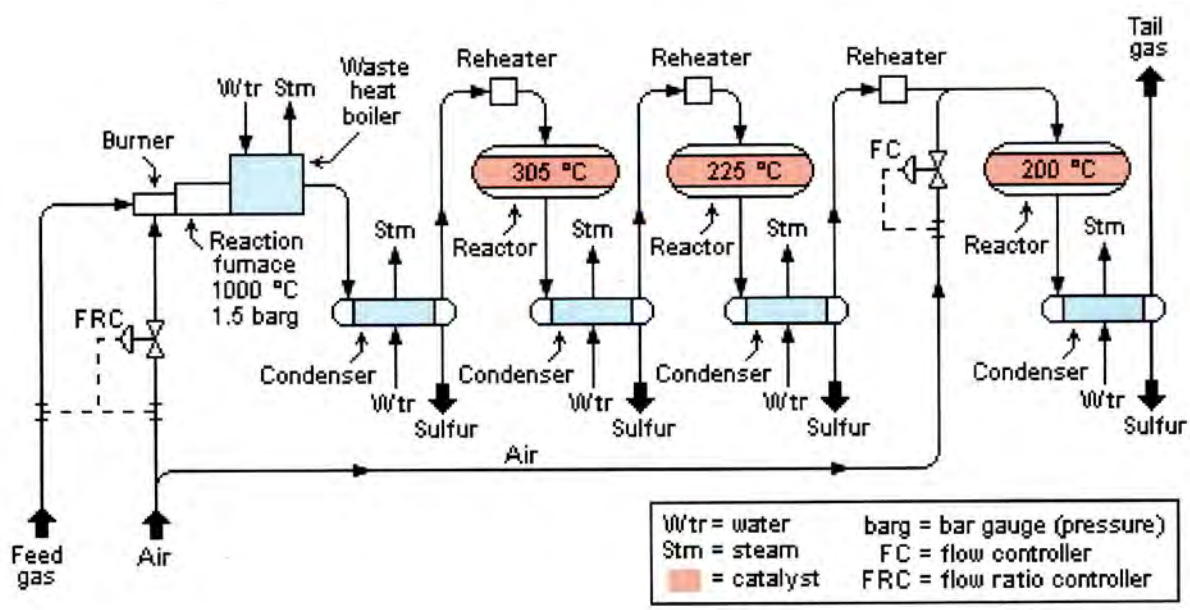

Figure 4. Claus Process Diagram[56]

According to one estimate, a two stage catalyst Claus process sulfur recovery unit would cost approximately $12.5 million for 100 tons/day of processing capacity.[57] After reviewing the Soviet data on the wells in Juma and Bashikurd, and doing some rough calculations, it would appear that a single unit with a 100 tons/day processing capacity would be sufficient to extract elemental sulfur from the waste gas stream. The Claus process unit would add approximately $12.5 million to the capital cost of the processing plant. The market price in China for elemental sulfur as of 07 March 2011 was about $230 per ton[58], though the price has been subject to substantial volitility in the past few years. Analysts predict that the world price for elemental sulfur will remain low for the forseeable future, based on development of sour oil and

[55] Id at 288-291.
[56] http://www.chem.tamu.edu/class/majors/chem470/Sulfuric_Acid.html Last Accessed: 06 March 2011.
[57] www.chinaep-tech.com/upload/accessary/8173/DZY08092502.pdf. Last accessed: 06 March 2011.
[58] http://price.alibaba.com/sulfur-sulfur%2528alpha%2529-price-100001646-100071782.html. Last accessed: 07 March 2011.

gas reserves in the Middle East and other factors. There are a large number of industrial applications for elemental sulfur, including sulfuric acid production, match factories and production of industrial chemicals and solvents. The prospects for the development of these industries in Afghanistan is uncertain, but the elemental sulfur produced from the process could be exported to other countries in Central and Southeast Asia. At present, market conditions in the region and the volitility of elemental sulfur prices make any realistic calculation of the financial benefits of the Claus process unit extremely difficult.

7. PIPELINE FROM THE GAS PROCESSING PLANT TO THE IPP

Once the natural gas from the Juma and Bashikurd gas fields is processed, it will be delivered to the power plant by a 12 inch, high pressure pipeline. This pipeline is anticipated to be very short, between one and three kilometers, based on the siting of the power plant very near to the anticipated siting of the natural gas processing plant. Based on the price quotation of $109 per meter of 12 inch seam pipe[59], and adding in a 30 percent factor for pipe transportation, customs clearances and other factors, AEAI is estimating the total cost of the pipeline between the gas processing plant and the IPP to be between $141,700 and $425,100, depending on the ultimate distance. Again using TFBSO's project cost to pipe ratio of 3.25, the total cost of the installed pipe would be between $460,525 and $1,381,575, based on the distance between the gas processing plant and the IPP. However, other factors such as above ground construction and the relatively short distance and small amount of pipe suggest that the final cost will be lower than this estimate. The ultimate cost for this pipeline may be borne by either the IPP or Afghan Gas depending on the negotiated custody transfer point in the Gas Supply and Purchase Agreement (GSPA).

8. GAS METERING AND REGULATION SYSTEM AT IPP CUSTODY TRANSFER

In order to accurately measure gas deliveries from the gas supplier to the IPP, a modern pressure regulating and metering station with meters of AGA#3 or equivalent standard, including an online calibration facility, gas chromatograph, odorizing facility, and fire safety system will be required. This will be an important medium-term investment, as disputes between gas suppliers and purchasers are often based on the amount of gas claimed by both sides. This system will ensure delivery of a quality gas supply and accurately measure the gas volume traded. This is a critical item as the regulating and metering station will determine how much gas and at what pressure, is sold to the IPP. AEAI is estimating the cost of this system at $4M and it is likely that this cost will be borne by both the IPP and their counterparty to the Gas Supply and Purchase Agreement (GSPA), probably Afghan Gas.

[59] See note 27.

IV. ELECTRIC SYSTEM AND RELATED INFRASTRUCTURE IN SUPPORT OF THE IPP

During late 2010 and early 2011, several feasibility studies were commissioned by different donors to examine aspects of the electric power system in Afghanistan. These include a study of the NEPS-SEPS interconnection, a proposed route through Bamiyan to avoid constraints over the Salang Pass and upgrades on the existing line over the Salang Pass to increase the capacity of the line. These feasibility studies were nearing completion during the drafting of this report. The SGFDP team will continue to update the electricity infrastructure information contained in this assessment as needed until May 31, 2011.

According to Afghanistan Energy Information Center (AEIC) total grid-connected operating capacity from imports and local generation is about 823 MW.[60] This capacity is comprised of 438 MW from imports, which accounts for about 53% of total grid-connected operating capacity. The proposed 200 MW gas-fired power plant, operating at 90% capacity, is going to add an additional 180 MW of electricity to the operating capacity and thus will raise the local generation from 47% to about 56% of total operating capacity. Not only is this increase in local generation beneficial for Afghanistan from an energy security perspective, Afghanistan will be able to leverage this increase in negotiations with the neighbors on the price of imports. The summary of Afghanistan's existing overall generation and import capacity is given in Table 1.

Table 1: Summary of Existing Overall Generation and Imports Capacity[61]

Grid Connected	Capacity (MW)	
	Installed	Operating
Hydro	232.5	177.0
Thermal	45.0	40.0
Diesel Generators	129.5	119.3
Power Imports	586.6	416.0
Subtotal Grid	993.6	752.3
Off Grid		
Hydro	22.8	10.3
Micro Hydro	21.9	21.9
Thermal	0.0	0.0
Diesel Generators	10.5	10.5
Solar	5.8	5.8
Power Imports	22.0	22.0
Subtotal Off Grid	83.0	70.5
Total	1,076.6	822.8

[60] ICE Energy Sector Report – October-December 2011, page 8
[61] ICE Energy Sector Report – October-December 2011, page 8

For the IPP transaction to be successful, DABS will likely have to be able to transmit the power purchased from the IPP to Kabul and beyond. This ability to wheel in power from different generation sources to different parts of the country along the NEPS line, and hopefully soon to be built SEPS line, will enhance the financial profile of DABS and adds support to the payment guaranty to the IPP. It is anticipated that DABS will purchase the power from the IPP at the bus bar in Sheberghan. DABS will make the decisions regarding where to wheel in the electricity based on financially sound models of efficient dispatch. The three likely options for DABS, once the appropriate transmission lines are built, would be to: 1) keep the power in the north, substituting the amount of imported power from Uzbekistan and Turkmenistan; 2) transmit the power to Kabul and beyond; and/or 3) sell the power to one or more anchor customers in the north.

According to Table 2 below, the total supply in the Northern provinces was about 519,000 MWh in 2010. The proposed 200MW gas-fired power plant will produce about 1,402,000 MWh of electricity per year. Therefore, at a minimum, we can assume that 37% of the produced electricity from the IPP can be used in the north, replacing the imported power from Uzbekistan and Turkmenistan. Table 3 below has the breakdown of electricity supply by province in the North.

Table 2: Electricity Supply to Provinces in the North

Province	2006	2007	2008	2009	2010
Baghlan	30,719	35,141	25,024	45,794	65,158
Balkh	172,467	165,483	177,258	175,253	197,283
Faryab	14,246	24,152	56,220	75,387	89,057
Jowzjan	56,811	59,906	60,828	59,923	68,931
Kunduz	44,336	52,940	39,568	56,954	77,804
Samangan	1,001	1,480	1,293	5,679	10,733
Sari-e-pul	2,759	7,152	8,712	10,016	9,929
Total	**322,339**	**346,254**	**368,903**	**429,006**	**518,895**

In order to transmit the power to Kabul and beyond via NEPS, the existing transmission lines need to be upgraded. This is discussed in detail in the transmission section of this report. As far as the third major option is concerned, there is a possibility for DABS to sell power to one or more anchor customers in the Sheberghan/Mazar region. This may include international organizations operating in the north such as ISAF or heavy-power users in Mazar's industrial zone. Some organizations that depend on diesel generators as their main source of power pay between $0.70 and $1.00 per kWh. This represents a strategic opportunity for DABS to buy power from the IPP and sell it to one or more anchor customers for a very handsome profit, provided the power delivered to the anchor customers meets or exceeds the quality and reliability of the diesel power.

The sections that follow describe in detail the infrastructure and other issues in support of the IPP on the power side. These include discussion on the technology options for the 200MW gas-fired power plant, transmission lines and substations, and issues such as power synchronization and load dispatch that need to be fully addressed by DABS in order to ensure that the IPP transaction is a success.

1. POWER PLANT TECHNOLOGY OPTIONS

This section explores different technology options for the 200 MW gas-fired power plant. Although technology will not be dictated to the IPP, the technology options lets the Afghan Government as well as the investors explore the range of variables available, as input fuel and other resources such as water, for the generation of 200 MW of electricity. Power plant technologies that could be used are:

a. Simple cycle gas turbines
b. Combined cycle gas turbines
c. Gas fired steam turbines
d. Gas fired generators

a. Simple Cycle Gas Turbines

This type of power plant is fueled with natural gas. The turbines draw in air at the front of the unit and then compress it, mix it with fuel and ignite the mixture at high pressure. The hot gas released expands through the turbine blades connected to the turbine shaft. The shaft turns thus developing mechanical energy which is converted into electrical energy by the generator.

Figure 5 – Simple Cycle Schematic

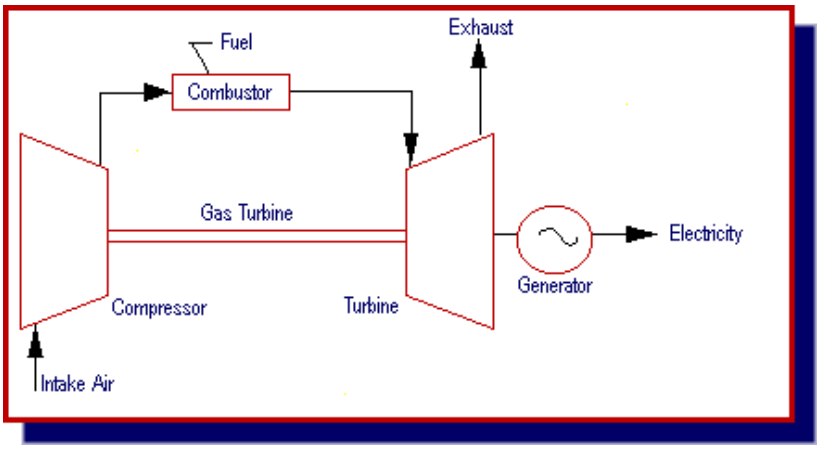

Simple cycle gas turbines are used primarily in locations where water is scarce. The process water consumption in simple cycle power plants is negligible. This technology has been in operation for four decades and there are several reputable U.S. and non- U.S. manufacturers of such technology.

b. Combined Cycle Gas Turbines

In combined cycle power generation the gas turbine generates electric power, and the steam produced by the waste heat of the gas turbine rotates the steam turbine to generate additional electric power.

The reasons or characteristics that make the combined cycle a leading generation technology for newly installed thermal power plants are;

- High thermal efficiency – about 43% as compared to a steam turbine and 40% as compared to a gas turbine giving an overall efficiency of about 50% for the combined cycle.

- Technology is environment friendly

  - Emitting less carbon dioxide (CO_2) to the atmosphere
  - Emitting less nitrogen oxides (NO_X) and sulfur dioxide (SO_2) to the atmosphere

- Reducing fuel consumption leading to conservation and saving of resources

A schematic of a combined cycle power plant is shown below. The hot gasses from the gas turbine are directed to a heat recovery steam generator where steam is generated and fed into a steam turbine to generate more power and thereby increasing the efficiency of the power plant.

Figure 6 – Combined Cycle Schematic

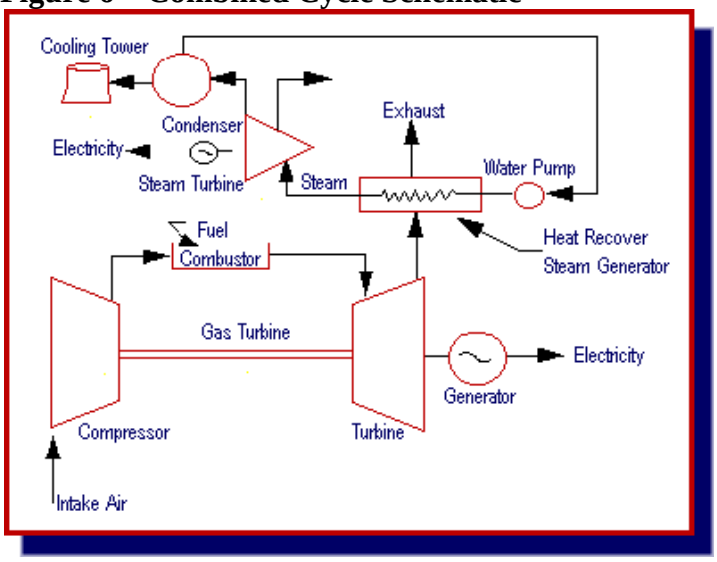

c. *Gas Fired Steam Turbines*

In the case of a gas-fired steam turbine, the steam is generated in a boiler, where water passes through a series of tubes to capture heat from the firebox and then boils under high pressure to become superheated steam. The heat in the firebox can be provided by combustion of any fossil fuel including coal, gas, or oil. The superheated steam leaving the boiler is fed to a steam turbine throttle, where it powers the turbine and connected generator to supply electricity.

After the steam expands through the turbine, it exits the back end of the turbine, where it is cooled and condensed back to water in the surface condenser. This condensate is then returned to the boiler through high-pressure feed pumps for reuse.

Steam turbine plants are reliable and have a history of achieving up to 95% availability and can operate for more than a year between shutdowns for maintenance and inspections. However, overall efficiency of a steam turbine power plant is close to 30%, meaning the fuel consumption per kWh is relatively high compared to other systems.

Figure 7 – Steam Turbine Schematic

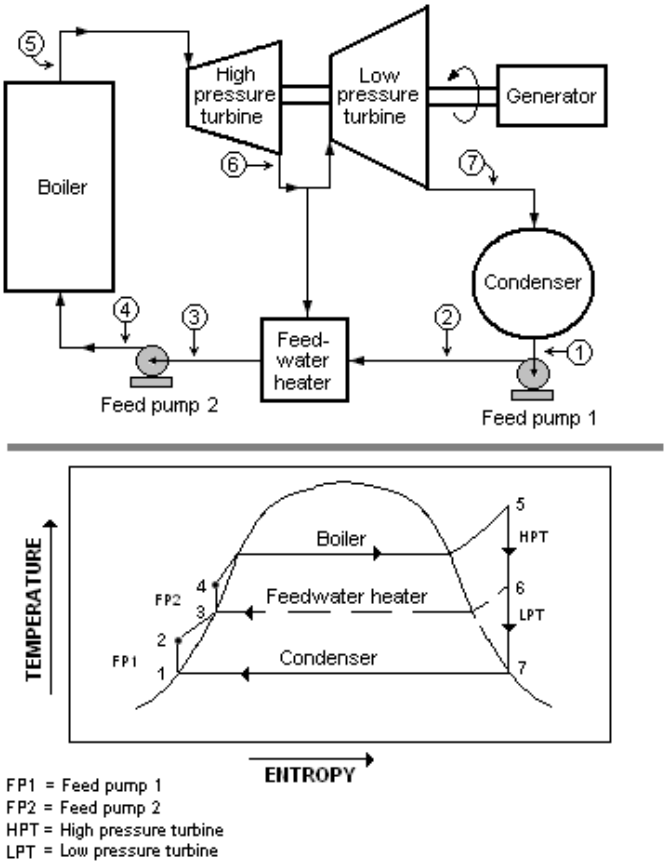

Historically, this technology has been commonly utilized for power plants and the combustion chamber can be designed to accommodate multiple types of fuel.

d. Reciprocating Engines/ Gas Fired Generators

Gas fired generators operate on the reciprocating, or piston-driven concept--a widespread and well-known technology. Also called internal combustion engines, reciprocating engines require fuel, air, compression, and a combustion source to function. Depending on the ignition source, they generally fall into two categories: (1) spark-ignited engines, typically fueled by gasoline or natural gas, and (2) compression-ignited engines, typically fueled by diesel oil.

The four-stroke, spark-ignited reciprocating engine has intake, compression, power, and exhaust cycles. In the intake phase, as the piston moves down in its cylinder, the intake valve opens, and the upper portion of the cylinder fills with fuel and air. When the piston returns upward in the compression cycle, the spark plug emits a spark to ignite the fuel-air mixture. This controlled reaction, or "burn," forces the piston down, thereby turning the crank shaft and producing power.

The compression-ignition engine operates in the same manner, except the introduction of diesel fuel at an exact instant ignites in an area of highly compressed air-fuel mixture at the top of the piston. In the exhaust phase, the piston moves back up to its original position, and the spent mixture is expelled through the open exhaust valve.

Commercially available reciprocating engines for power generation range from 0.5 kilowatt (kW) to 6.5 megawatt (MW). Reciprocating engines can be used in a variety of smaller applications because of their small size, low unit cost, and useful thermal output. They offer low capital cost, easy start-up and proven reliability. Commissioned in less than one year from authorization, the 228MW (115MW was added to an existing capacity of 113 in 2008) Plains End Power Plant in Arvada, Colorado is said to be the largest natural gas fueled reciprocating engine technology power plant in the world[62]. The plant utilizing Wartsila generators is owned by PG&E's National Energy Group (NEG) and is located in the Denver metropolitan area.

Figure 8 – Reciprocating Engines/ Generators

Plant emissions from such technology are low because of the modern natural gas reciprocating engine technology utilizing pre-combustion chambers, individual cylinder temperature control, and lean burn technology, Carbon Dioxide (CO_2) and Volatile Organic Compounds (VOCs) are further controlled with an oxidation catalyst. Sulfur Oxides (SOx) emissions are controlled to nine parts per million (ppm) with Selective Catalyst Reduction (SCR) technology using urea as the reagent. The ability of the technology to operate without use of process water is of significant social and environmental benefit.

[62] http://www.cogentrix.com/plants.aspx?id=9

e. Comparative Analysis

Table 3 shows some important characteristics of various gas fired power plant technologies. Each technology has its own merits and applications. A simple cycle gas turbine is ideal for locations where water conservation is important. If water is readily available then the combined cycle plant is the most efficient option. Gas fired generators or reciprocating engines are typically used to supply electricity to small communities; however, recently a 228 MW gas fired generator power plant was commissioned in the Denver area. These generators can be installed in modules and if necessary the plant capacity expanded.

"Heat Rate" is the term used in power industries to check how efficiently the plant is running. It measures efficiency using Btus (British Thermal Units) per kilowatt hour (Btu/kWh). The lower the ratio between the heat input (Btus) and electricity output (kWh), the more efficient the operation of the power plant.

In the case of Sheberghan project, the private investor / IPP will make its own decision on the type of technology used for this project. Typically, the price of the fuel (in this case gas), the capital costs, and availability of water plays a major role in technology selection. A detailed life cycle cost analysis for each option is necessary to determine the most cost effective option. Figure 9 below provides a snapshot of capital costs of various generation technologies.

Figure 9

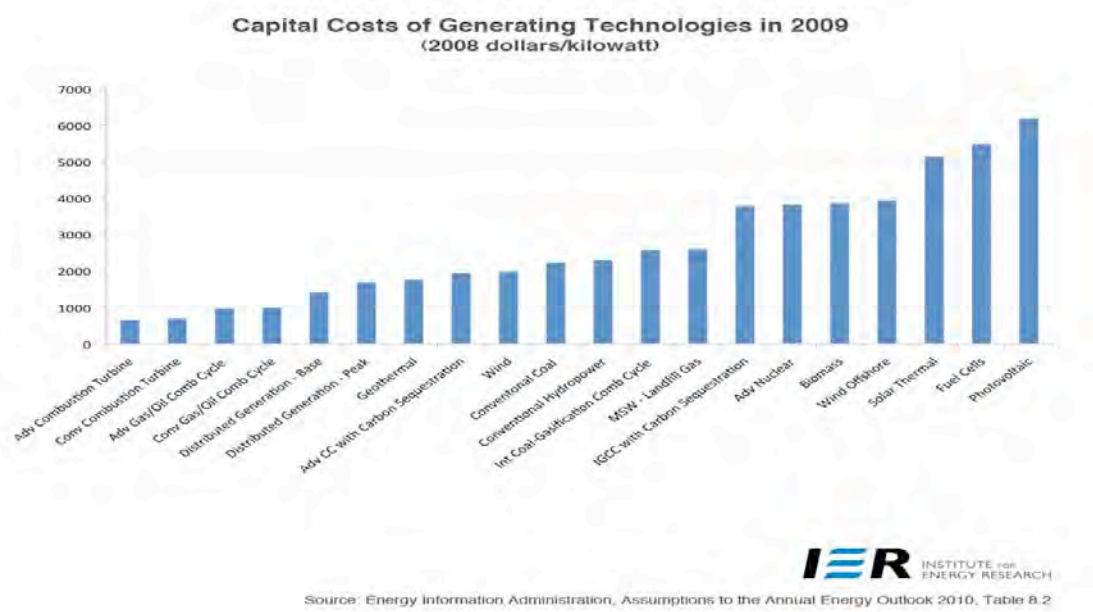

Per Figure 9 above, various gas-fired generation technologies cost between $500/kW and $1000/kW. Substantial cost variations between generation plants are a result of specific site issues, legal fees, environmental controls and other permitting costs.

Table 3 – Gas Fired Power Plant Characteristics

	Simple Cycle Gas Turbine	Combined Cycle Gas Turbine	Gas Fired Steam Turbine	Gas Fired Generator/Reciprocating Engines
Estimated Capital Costs [1]	$450/KW-$700/KW	$700/KW-$1000/KW	$1200/KW	$1000/KW
Operating Efficiency [2]	35% - 40%	~ 50%	~30%	25% - 45%
Heat Rate (Btu/KWh) [3]	~ 13,000 btu/kWh	~10,000 btu/kWh	~13,000 btu/kWh	~10,000 btu/kWh
Process Water Requirements [4]	Negligible	250-350 galls/MWh	300-500 galls/MWh	Negligible
Estimated Procurement Lead Time [5]	1 year	1 year	1 year	0.5 years
Construction Schedule [6]	2-3 years	2-3 years	2-3 years	0.5 years
Estimated Operating & Maintenance Costs [7] (fuel cost not included)	2 cents/kWh	2 cents/kWh	3 cents/kWh	3 cents/kWh
Plant Service Life [8]	30 years	30 years	30 years	5-10 years (generator replacement)
Estimated Capital Costs for a 200 MW plant (USD) [9]	$140 million	$200 million	$240 million	$200 million
Estimated annual O&M costs. ($/year) [10]	$28.0 million/year	$28.0 million/year	$42.0 million/year	$42.0 million/year
Estimated annual Gas Fuel Usage [11]	560 million m^3/year	435 million m^3/year	560 million m^3/year	435 million m^3/year
Estimated annual kWh generation (kWh/year) [12]	1402 million kWh	1402 million kWh	1402 million kWh	1402 million kWh

Notes:

1. Capital Costs - Cost estimates are based on international prices and plants that have been constructed recently. A recent Tetra Tech report for USAID "Engineering Support Program- NEPS to Kandahar Tactical Tie In", dated September 2010, states that the cost of projects in Afghanistan could be higher by a factor of 1.6. This is because of substantial logistics and security costs. The costs in this table do not include this 1.6 multiplier.

2. Operating Efficiency – Based on standard thermodynamic principals and industrial operations. Higher efficiency means less fuel (gas) usage.
3. Heat Rate[63] - Assumed gas fuel heating value is 32,171 btu/ m^3. The heat rate provides the btu input necessary to generate one kWh. Therefore, based on Sheberghan gas quality 0.31 m^3 gas will generates 1 kWh of electricity.
4. Process Water Requirements – Combined cycle gas turbine and conventional gas boilers do require make up water for loss of process water and due to evaporation of water in condensers. The galls/MWh reported is based on similar operational plants.
5. Estimated Lead Procurement Time – Time for preparation of bid documents, proposal submittal time, evaluation of bids, contract negotiation, and contract award.
6. Construction Schedule – time for delivery of equipment to Sheberghan, installation and commissioning of the power plant.
7. Estimated O&M costs – O&M costs include all salaries, maintenance, spare parts, services, utilities, insurance, and other incidental costs. Fuel costs are not included in the O&M costs. Based on similar operations the estimated O&M costs are 2-3 cents/kWh. O&M costs are based on base-loaded plant operation with 80% availability. Therefore, total annual kWh generated = 1402 million kWh/year.
8. Plant Service life – Useful life of a power plant with continued annual maintenance of most equipment is about 30 years.
9. Based on a 200 MW power plant and utilizing a higher capital cost as shown in the first row of the table.
10. Based on plant availability of 80%.
11. Estimated fuel (gas) usage - Assumed gas is 32,171 btu/m^3. Heat rate for simple cycle is 13,000 btu/kWh. Therefore, gas usage is 0.40 m^3/kWh. Based on annual 1402 million kWh generation the total gas usage is estimated at 438 MMCM.
12. See note 7.

[63] The heat rate value is based on the latest gas analysis of a sample from Well #21 in Gerquduq.

2. SUBSTATIONS

DABS has an existing substation located south of the city of Sheberghan. The 110 kV transmission line from Turkmenistan transmits electricity to this substation as shown in Figure 10.

Figure 10- Northeast Power System

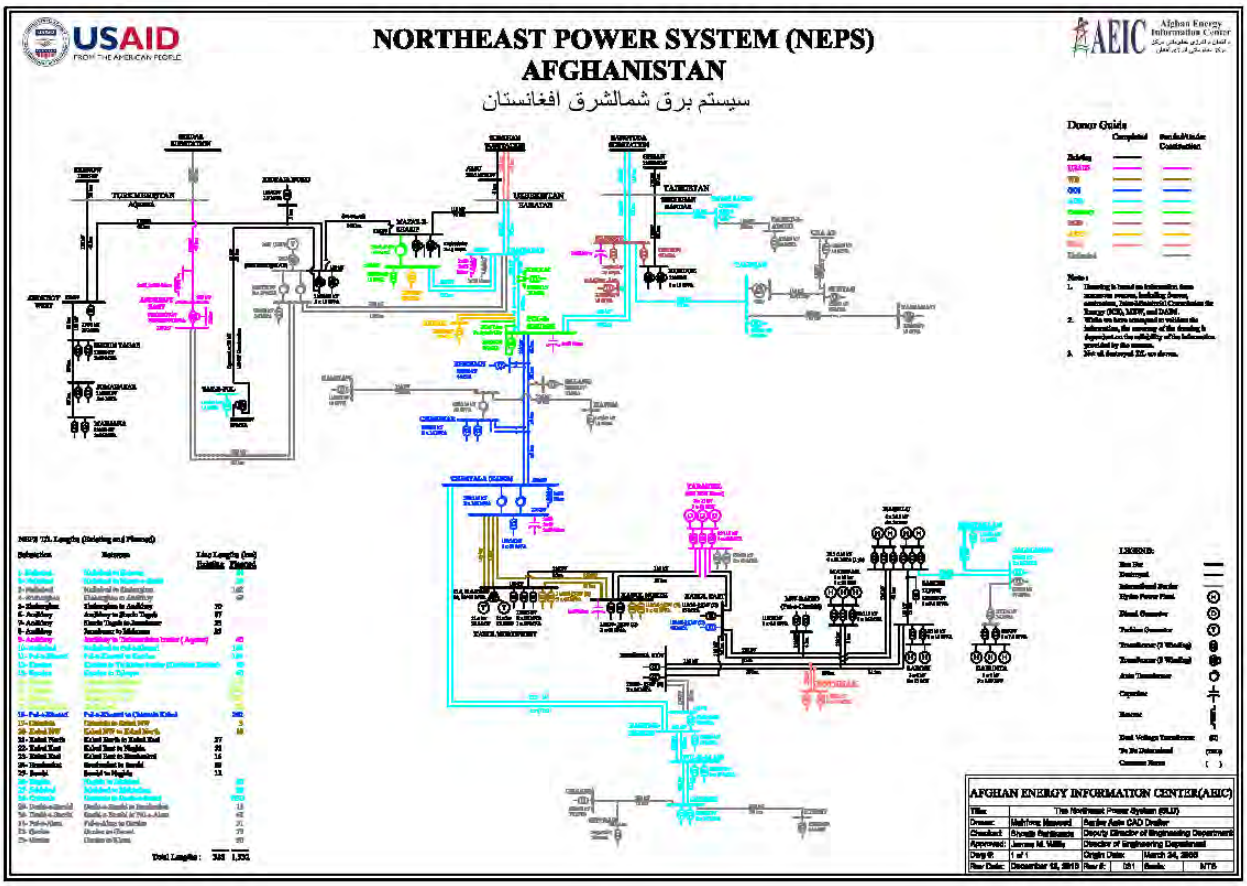

Step down transformers convert the 110 kV to 6 kV and this lower voltage electricity is fed to the Sheberghan city grid. DABS has already identified a new substation site that will receive electricity from the 200 MW power plant and transmit via a 220 kV double circuit transmission line to Mazar-e-Sharif. In order to transmit 220 kV new transformers will be required both at the Sheberghan and Mazar-e-Sharif substations (step up in Sheberghan and step down in Mazar). In addition if the 200 MW supplies power to the Sheberghan grid then another step down transformer (220/20 kV) will be required for city supply.

3. POWER TRANSMISSION LINES

The North East Power System (NEPS) grid serves the northern and eastern portions of Afghanistan. Power from Uzbekistan (Surkhan 220 kV substation) is imported via NEPS through the Afghan border at Hairatan to the Naibabad switching station, then on to the Pul-e-Khumri substation and on to Kabul at the Chimtala substation.

According to DABS, currently (as of March 1, 2011) Afghanistan imports about 184 MW of power from Uzbekistan, arriving at the Naibabad switching station. From Naibabad, 33 MW goes to the Mazar distribution system and about 8 MW goes to Pul-e-Khumri, at the Pul-e-Khumri substation. The remaining power, about 143 MW, comes to the Chimtala substation in Kabul.[64]

It is anticipated that Afghanistan will import about 300 MW from Tajikistan and up to 470 MW from Uzbekistan through NEPS in the next two to three years. The proposed IPP will deliver 200 MW, by early 2014 if construction starts in 2012, to Naibabad substation and another 48 MW will be delivered from the existing NFPP to Naibabad substation, once the rehabilitation of the plant is completed sometime in late 2012. The current capacity of the transmission line from Naibabad to Pul-e-Khumri is limited to 400 MW. NEPS' transmission capacity from Pul-e-Khumri to Chimtala is limited to only about 250 MW (with reactive power compensation in place).[65] According to a draft report by Tetra Tech, by spending another $30 million, the line from Pul-e-Khumri to Kabul would be able transmit about 450 MW of power.[66] USAID as well as ADB have commissioned feasibility studies in order to address these limitations and find possible solutions.

In order for the IPP to sell power to DABS, DABS has to have the capacity to take this power and transmit it from the gas-fired power plant all the way to Naibabad substation in order to send the power down to Kabul and beyond. The existing 110 kV line between Sheberghan and Mazar has been completely destroyed and only the towers remain in a few points along the route. Constructing a 220 kV transmission line from Sheberghan to Mazar-e-Sharif is a critical part of the electrical infrastructure that would allow the 200 MW produced from the power plant to be sent Kabul.

ADB has committed about $75 million for the construction of this 220 kV line and another $25 million for the expansion of the distribution network in the city of Sheberghan. The timing of this project depends on the outcome of the 500 kV import power transmission line from Turkmenistan or a commitment from the investors on the construction of the 200MW gas-fired power plant in Sheberghan.

As far as the local distribution is concerned, on the field trip to Sheberghan in late 2010, the DABS Manager informed the AEAI team that the city of Sheberghan gets about 20 MW via the Turkmenistan 110 kV transmission line that is routed from Andkhoy. There is no local generation capacity in Sheberghan. Turkmenistan power originates at a gas fired power plant that is located about 410 km Northwest of Sheberghan. During peak hours there is a significant voltage drop along the Turkmenistan line from 110 kV to about 60 kV. The existing distribution network in Sheberghan is 6 kV; however, ADB is funding $25 million to upgrade the network to a 20 kV system. The preliminary network survey has been completed. The DABS tariff is about 2 cents/kWh.

---

[64] Per interview with Ana Moncada, senior advisor to DABS, on March 1, 2011.
[65] AEIC – Afghanistan Power Generation & Imports 2008-2012 map.
[66] Discussed by USAID at the March 29th ICE Meeting.

Estimated Transmission Line and Transformer Costs Related to the IPP

The transmission line and substation costs originating from the IPP are shown in Table 4.

Table 4 – Transmission Line and Transformer Costs

TL /Equipment	Estimated Cost (USD)
Step up transformers in Sheberghan 11 kV / 220kV (1)	5.6 million
Step up transformer in Sheberghan 11 kV / 20 kV (2)	0.5 million
220 kV Transmission line from IPP to Mazar-i-Sharif substation (3)	43.4 million
Step down transformer in Mazar 220 kV/ 20kV (4)	4.5 million
Total	**$54 million**

Notes:

1) Assume IPP generators output is 11 kV. Transformers required to step up 200 MW to 220 kV.
2) Assume about 40 MW will be supplied to the City of Sheberghan. Transformers required to step up 11 kV to 20 kV.
3) Transmission line costs $289,000/km[67] for a double circuit 220kV line with steel towers. For a 150 km-long line the cost is $43.4 million.
4) In order to supply electricity to Mazar a step down 220 kV/ 20 kV transformer is required.
5) Potential synchronization costs are not included in this table.

4. POWER SYNCHRONIZATION

As mentioned earlier, Afghanistan imports power from Uzbekistan via NEPS down to Kabul. The 220 kV transmission line from Tajikistan to Pul-e-Khumri is expected to be completed in 2011. Turkmenistan is delivering power to the Andkhoy and Sheberghan area via a 110 kV transmission line. So far the imported power has not been synchronized with the domestic Afghan power sources. This lack of synchronization has resulted in different power sources operating in a separate island. The power sources near Kabul such as Naghlu, Sorobi and Mahipar power plants and the Tarakhil diesel power plant are synchronized and compromise the biggest island in Kabul.

In order to be able to connect local sources of power, including the 200 MW from the IPP, with the imported power from the neighboring countries, Afghanistan will need to synchronize these difference sources. If Central Asian countries, for example,

[67] NEPS TO Kandahar Tactical Tie-in Report, Tetra Tech September 2010.

synchronize their power systems, then Afghanistan will need to synchronize their local power generation with the larger Central Asian system. However, if Central Asian countries do not synchronize their systems, Afghanistan will need to synchronize their local generation with every imported source and that will be a complex endeavor.

The challenges of synchronization in Afghanistan are system-wide and require a broader solution. The IPP will have to work closely with DABS to make sure that the power plant is compatible with the broader electrical system.

5. ELECTRICITY DISPATCH – NATIONAL LOAD CONTROL CENTER

USAID is funding the construction and operation of a national load control center (NLCC) located in Kabul. The project entails a turnkey Supervisory Control and Data Acquisition (SCADA) and Communications System for 18 Substations and Generation Plants for the automation of the Afghanistan NEPS Network. The system will provide automated real-time system control and data acquisition for power scheduling and dispatching, load shedding/restoration during contingencies, system maintenance and planned outages, and system security for safe and reliable operations.[68]

It is anticipated that the NLCC will be completed sometimes during the summer of 2011. Once the 200 MW gas-fired power plant is commissioned, the power plant will be connected to the NLCC as well.

[68] USAID's Afghanistan Infrastructure and Rehabilitation Program (AIRP).

V. WATER AVAILABILITY

The availability of water is a very important component of an infrastructure assessment in the Sheberghan area. The efficiency of the power plant can be increased substantially by utilizing a combined cycle configuration for power generation. The increased efficiency for the power plant generator sets means that the power plant can produce its anticipated nameplate capacity of 200 MW with less gas than would be required for a simple or open cycle configuration. The gas savings and energy efficiency gains depends on a wide variety of factors and the ultimate technology selection by the IPP, but these gains are substantial enough to warrant an analysis of the existing surface and groundwater resources in the Sheberghan area and whether those resources would be sufficient to support the combined cycle configuration.

Water availability information for the general Sheberghan area was obtained from several sources including Afghan Gas, Sheberghan Water and Irrigation Departments, and Fitchner, a World Bank consultant implementing a drinking water project in the City of Sheberghan. Sheberghan is the capital and economic center of the Jowzjan province, and is situated 130 km west of Mazar-e-Sharif, along the banks of the Safid River. The town has an estimated population of 500,000 and an area of approximately 832 hectares. It is surrounded by irrigated agricultural land, and it lies on a main East-West road through Northern Afghanistan and is about 100 km south of the Turkmenistan border.

Surface Water

The Sheberghan area lies between two rivers (White River and Black River). Both these rivers originate near Sar-i-Pul and run from south to north. Surface water from the rivers and irrigation canals and ditches is a major source of water for domestic use by sections of the population without connections to the piped water supply system or without wells. The local population also uses surface water to supplement the inadequate supply from the piped system. Water flows in both the White and Black rivers is seasonal with water levels receding, but not disappearing, in late summer. The rivers flow northward past Sheberghan and during high water flow season the water floods large amounts of land north of Sheberghan. The City Irrigation Department claims that there is a significant need for irrigation water and only 20% of present needs are being met. Major crops in the Sheberghan area are wheat, cotton, and fruit.

The U.S. Geological Survey, in coordination with TFBSO, conducted an extensive study of surface water resources in Northern Afghanistan, but did not include the Black and White Rivers in Jowzjan Province in the study.[69] Unfortunately, very little scientific data is available regarding the flow characteristics and capacity of the White and Black Rivers. However, in both the 2006 Feasibility Study and current analysis, it was, and remains, anticipated that the water supply for the gas

[69] Streamflow Characteristics at Stream gages in Northern Afghanistan and Selected Locations. Prepared by the United States Geological Survey in coordination with the Task Force for Business and Stability Operations. 2010. http://pubs.usgs.gov/ds/529. Last accessed: 11 March 2011.

processing plant and the IPP will be delivered from a series of groundwater wells tapping into an aquifer between the two rivers.

MEW has primary responsibility for planning, management and development of water resources, in cooperation with other ministries and institutions.[70] MEW also has responsibilities related to collection, analysis and evaluation of hydrological data for surface water, construction and maintenance of hydropower facilities, and preparing water resources policies and strategies, among others.[71] MEW is responsible for issuing Water Usage Licenses[72] under the Water Law.[73] For more information on the legal and regulatory aspects of the Water Law, see the *Legal and Regulatory Analysis Report*.

Despite the split regulatory structure regarding surface and groundwater resources, the two resources are joined and it should be noted that excessive groundwater pumping will affect the available surface water resources. In order to ensure sufficient water supplies and minimize water conflicts with the local population, this Assessment is in agreement with the 2006 Feasibility Study that recommends utilizing groundwater resources to provide water to the gas processing plant and IPP.

Groundwater

The primary source of groundwater is a pair of aquifers located south of the city between the two rivers. This aquifer is recharged every winter and spring after the snow melts. Apart from a few thousand mainly private shallow wells, the town relies on a network of water pipes fed with water from deep wells. The wells are generally between 60 and 70 m deep, with some exceptions which are as deep as 104 m. There is no water near the IPP site; however, the Quarakent wells supplying water to the City are located about 12 km away from the IPP site. Additional wells drilled in this area could supply water to the IPP site. Previous studies conducted by the Soviet Union show two aquifers between the two rivers and south of Sheberghan. These aquifers are the source of most residential, commercial and irrigation water needs for the Sheberghan area Presently Afghan Gas is utilizing two 55 m deep wells in the Quarakent area for its needs. In official conversations with Afghan Gas, AEAI was told that the water quality is good and it is not saline. Presently, Afghan Gas pumps the water from the well into a storage reservoir. Afghan Gas has five pumps, four 75 kW and one 55 kW pump. The pumps were installed in early 1980's and are due for replacement.

MoM is responsible for planning and implementation of activities to survey, explore, investigate, research and assess groundwater reserves and provide for their protection from pollution in cooperation with the Ministry of Public Health and the National Environmental Protection Agency (NEPA).[74] MoM does not have a section on specific duties or responsibilities, like those listed for MEW above, in the Water Law. At one point, drafts of the water law contained a distinction between surface

---

[70] Chapter 1, Article 8: Responsibilities of Government Institutions, subpoint 2. The Water Law.
[71] Chapter 2, Article 10: Duties of the Ministry of Energy and Water.
[72] A "Usage License" is defined in the Water Law as: "an official written document issued for usage of water resources according to the provisions of this law."
[73] Id. at subpoint 13.
[74] Chapter 1, Article 8: Responsibilities of Government Institutions, subpoint 3. The Water Law.

water and groundwater and allocated responsibility for surface water to MEW and groundwater to the MoM. That distinction has not disappeared entirely in the final version of the law. MoM has the responsibility for the survey, exploration, and research of groundwater resources, and their protection from pollution or contamination, in Afghanistan.[75] MoM is also given the authority to issues permits/licenses for the operation of "deep" wells for agriculture, commercial, industrial and urban water supply purposes, once agreement of line Ministries has been obtained. In this sense, it would appear that the distinction between surface water and groundwater is still very much intact in the current version of the law.

Based on the information above, the IPP will need to obtain an Activity Permit and Usage License to draw water to support the power plant operations. Unfortunately, it is not clear from the law who has authority to issue these permits and licenses. MoM has the authority, after "obtaining agreement" of line Ministries, to issue permits and licenses for deep wells for commercial and industrial purposes. Further, "deep" is not defined in the law, meaning that there is no clear division of authority between MEW and the MoM as to who issues the necessary Activity Permit and Usage License for groundwater usage. Again, for more information on the legal and regulatory aspects of the Water Law, see the *Legal and Regulatory Analysis Report*.

There has not been a hydrological study on the aquifer in the Quarakent area and the full capacity of the aquifer is unknown. Based on discussions with Afghan Gas and Beller/Kocks/Bets regarding the water supply in the area, it would appear that the current rate of withdrawal from the aquifer is sustainable; as the water wells have been operating without needing any further deepening. Afghan Gas also said that the underground aquifer is hydrologically connected to the rivers, so depletion of the aquifer will result in a corresponding drop in the water levels in the river. The aquifer is anticipated to be sufficient to support both the power plant and gas processing plant, but a hydrological may be needed if groundwater usage causes a noticeable decline in surface water resources.

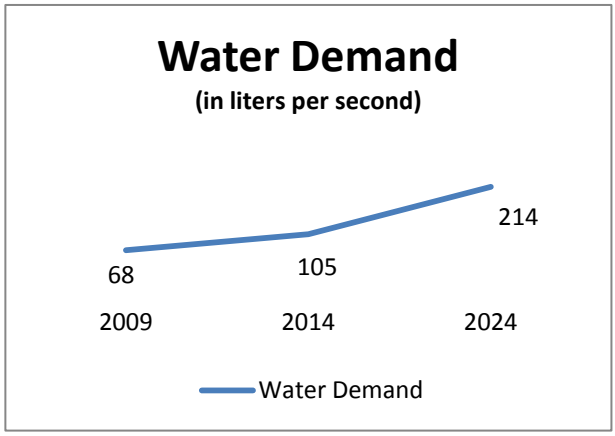

Water Demand

A water related feasibility study conducted by Beller/ Kocks/ Bets, under the World Bank funding in March 2005 projected the following water demand for the city of Sheberghan.

Based on the above stated study, Fitchner, a German Firm, is implementing a water distribution system in Sheberghan. This system includes a water storage reservoir and a filtration and chlorination system. Phase I of this program calls for 1750 connections by March 2011 and completion of the project by 2015.

The City Water Department informed us that presently, the city has 650 residential connections and 50 governmental connections. For its use, the city has constructed

[75] See supra, note 146.

four wells in the Quarakent area. The four new wells are about 63 meters deep and cost roughly $25,000 each. Water is pumped from the wells into a storage reservoir and then piped to the city residents. The water department charges a tariff of 16 cents/m^3 of water. The water department claims that the actual cost is about 40 cents/m^3 and presently, because of limited connections, a benefit of economy of scale is not derived.

Discussions with various governmental organizations showed competing water needs interests for irrigation, domestic consumption, and commercial use. The last hydrological study was conducted by the Soviet Union in early 1980's. There has not been any recent study estimating the ground water in the aquifer. In absence of any recent hydrological study it is difficult to predict if sufficient water is available for both long term domestic use, as well as for a power plant. The environmental impact report for the IPP will need to adequately address long term water supply for a power plant.

There are several governmental organizations including the Central Authority for Water Supply and Sanitation, Ministry of Energy & Water and the Ministry of Mines that are involved in water related issues. In addition, water is required for fire protection, employee housing and office area usage. Care should be taken by both the gas sweetening plant and IPP to minimize and avoid conflicting water usage with existing irrigation and domestic uses.

Water Quality

The 2005 Beller/Kocks/Bets Report gave the following water quality from the Quarakent wells:

Table 5 – Quarakent Area Water Quality

Parameter	Average Value
Coliform	0
pH	7.5
Conductivity	1300 – 4000
Turbidity	5
Calcium (mg/l)	> 40
Ammonium (mg/l)	Not detected
Nitrite (mg/l)	< 0.1
Sulphide (mg/l)	Not detected
Sulphate (mg/l)	300
Phosphate (mg/l)	Not detected
Chloride (mg/l)	75-150

The 2005 water analysis shows that the water has relatively high calcium content and is therefore considered "hard."[76]

[76] "Hard" water contains dissolved minerals, particularly calcium and magnesium. These minerals are not harmful to health, but create problems for water distribution systems because of their ability to form deposits. For more information, see: http://www.hardwater.org. Last accessed: 02 April 2011.

Estimated Water Related Infrastructure & Costs for a Power Plant

In the 2006 Feasibility Study, AEAI estimated that the 100 MW power plant in Sheberghan would be supplies with water from the pumping station at Quarakent, which would provide approximately 2,000 cubic meters per day.[77] The 2006 Feasibility Study anticipated that the total water requirement would be 10 cubic meters per day for a gas engine or turbine in an open cycle.[78] A combined cycle with a dry cooling option would require 147 to 215 cubic meters of water per day. Below is a reproduction of the table prepared for the 2006 Feasibility Study.[79]

Table 6. Estimated Water Use

	Reciprocating Gas Engines – Open Cycle	**Reciprocating Gas Engines – Combined Cycle**	**Gas Turbines – Open Cycle**	**Gas Turbines – Combined Cycle**
Boiler Blowdown	Not Applicable	Up to 50,000 cubic meters per year or 137 cubic meters per day	Not Applicable	Up to 75,000 cubic meters per year or 205 cubic meters per day
Dry Cooling Tower (recommended option)	Not Applicable	Negligible	Negligible	Negligible
Wet Cooling Tower – Evaporative Cooling Tower	Not Applicable	350,000 cubic meters per year or 959 cubic meters per day	Not Applicable	700,000 cubic meters per year or 1,918 cubic meters per day.
Gas Conditioning Plant	3,650 cubic meters per year or 10 cubic meters per day	3,650 cubic meters per year or 10 cubic meters per day	3,650 cubic meters per year or 10 cubic meters per day	3,650 cubic meters per year or 10 cubic meters per day

Unlike the assumption above regarding gas quantity, the water usage will not double based on the doubling of the anticipated nameplate capacity of the power plant. In one example, a combined cycle gas turbine plant in South Dakota required 0.28 cubic feet per second (or 7.92 liters per second) for a 300 MW nameplate capacity facility, according to their water permit from the South Dakota Department of Environment and Natural Resources.[80] The Deer Creek combined cycle gas turbine facility is comparable to the proposed IPP in Sheberghan, though the facility is larger than the anticipated nameplate capacity in the Sheberghan IPP.

---

[77] The Technical and Economic Feasibility of Development of a Gas-Fired Thermal Power Facility in Sheberghan Afghanistan. Volume II: Technical and Backup Material; Annex 6: Power Plant Alternatives, p. 6-30. Prepared for the Ministry of Energy and Water under the U.S. Agency for International Development Afghanistan Energy Assistance Program. Prepared by Advanced Engineering Associates International, Inc. March 2006.
[78] Id.
[79] Id.
[80] See South Dakota Water Permit No. 7167.3, dated November 2, 2009.

The amount of water used in the combined cycle process can vary greatly depending on the type of technology selected by the power plant developer. For the 200 MW power plant near Sheberghan, even a very high estimate – almost 25% more than the 300 MW Deer Creek facility – would require only two wells in the Quarakent area and still be less than half of what the 2006 Feasibility Study said was available in the Quarakent area for the project. The Geo Engineering and Hydrogeological Research Department of the Ministry of Mines has stated in an official letter that each well from Quarakent is capable of producing up to 10 liters/second. Under this scenario, utilizing two wells would easily provide sufficient water for the power plant. The amount of water used by the gas processing plant is minimal, amounting to an estimated 6 acre-feet per year.

Table 7. Water Usage Estimates

Water Usage Estimates	liters per second (l/s)	cubic feet per second (cfs)	cubic meters per day	cubic meters per second (m3/s)	acre-feet per year
Available water supplies at Quarakent	23.1500	0.817533	2000.16	0.023150	592.07
AEAI 2011 SGFDP - 200 MW (est.)	12.3442	0.435931	1066.54	0.012344	315.71
Basin Electric Deer Creek CCGT - 300 MW[81]	7.9280	0.279974	684.98	0.007928	202.76
AEAI 2006 Feasibility Study - 100 MW (wet cooling, maximum number)	22.2000	0.783984	1918.08	0.022200	567.78
AEAI 2006 Feasibility Study - 100 MW (dry cooling, recommended option)	2.4884	0.087878	215.00	0.002488	63.64

In order to provide the estimated 12.34 liters per second of water for the 200 MW IPP, it will be necessary to complete the following infrastructure:

- Drill and complete two new groundwater wells in the Quarakent area
- Procure and construct a new water pumping station
- Procure and construct a 12 kilometer water pipeline from Quarakent to the power plant site.

[81] Id.

Estimated costs for the above stated infrastructure is shown in Table 8.

Table 8 – Estimated Water Infrastructure Costs[82]

Required Water Infrastructure	Cost (USD)
Drilling of two wells	$50,000
Water pumping station / civil works	$200,000
12 km water pipeline	$1,600,000
Total	**$1,850,000**

[82] Source of these costs is the Provincial Towns Water Supply and Sanitation Project Feasibility Study for Sheberghan. Finalized by *BELLER - KOCKS - BETS* 35 – March 2005. Office: Sadarat Street 16, Shar e Naw, Kabul. e-mail: pt-afghanistan@gmx.net.

VI. PRELIMINARY ASSESSMENT OF AFGHAN GAS ENTERPRISE AND POTENTIAL WORK FORCE NEEDS AND TRAINING

Afghan Gas Enterprise (Afghan Gas) is a government-owned enterprise reporting to MoM. Historically, once the Northern Directorate of the Hydrocarbon Unit (NHU) had completed the exploration and development work, the completed wells were turned over to Afghan Gas for production, processing and transportation of the gas. This distinction no longer holds true, as Afghan Gas and the NHU have been working jointly to develop and rehabilitate wells in the Sheberghan area.

Afghan Gas Enterprise was established as the second branch of the Ministry of Mines in 1967 (1346) to explore for and develop natural gas in Afghanistan. It was legally transformed into a governmental enterprise in 1984. Afghan Gas was established with 72 officials, 421 hired workers and 119 foreign experts. Afghan Gas is currently producing approximately 450,000 m^3 per day, or about 12.5 million m^3 per month. Roughly 80% of this production goes to the NFPP. The remaining 20% is distributed to domestic users in the City of Sheberghan and the immediate areas, including the villages of Aqcha and Khoja Dokoh. Currently, Afghan Gas lacks modern equipment at all levels of its operations and substantial investment will be required in equipment and capacity building activities.

Afghan Gas Enterprise has a dehydration plant and gas production and gathering equipment in the Khoja Gogerdak gas field. The condition and operational status of these facilities is unknown. Afghan Gas has a sweetening (hydrogen sulfide removal) plant at Gerquduq, but the operational status and present condition of this facility has not been independently verified. A site visit to the gas processing facility in November 2010 by AEAI showed the facility was in a poor state of repair and was not functioning. Numerous feasibility studies have concluded that rehabilitation of the existing Gerquduq facility would not be economical. Afghan Gas is currently operating a gas pipeline from Khoja Gogerdak to Kude Barq fertilizer plant (9 x 720 mm diameter and 89.1 km long) and a distribution network for the City of Sheberghan and small villages in the immediate area of the gas fields.

MoM has discussed the possibility of corporatizing Afghan Gas, as they are looking to Afghan Gas to represent Afghanistan in the negotiations and implementation of the proposed Turkmenistan-Afghanistan-Pakistan-India (TAPI) pipeline. The Ministry of Mines has also discussed utilizing a management contract, where the company would be put under management of an outside entity with experience in operating a gas company to quickly build capacity of the organization to make it more effective in handling its affairs. No concrete steps have been taken towards this objective yet, but the potential corporatization of the natural gas supplier in the IPP transaction is something that the investors should be aware of.

Corporate Structure

Afghan Gas, similar to other government-owned enterprises in Afghanistan, has a workforce that was trained mostly during the Soviet occupation of Afghanistan. The skill-sets that are required for modern operation of gas fields and gas production are scarce. Furthermore, due to lack of funding, the enterprise does not have adequate modern equipment and supplies to operate efficiently. When Afghan Gas Enterprise was transformed into a governmental enterprise in 1984, they had 1291 employees: 254 officials and 1037 contractors (229 of which were foreign experts). Currently,

Afghan Gas has 1047 employees. The Afghan Gas organizational chart is shown in Figure 11.

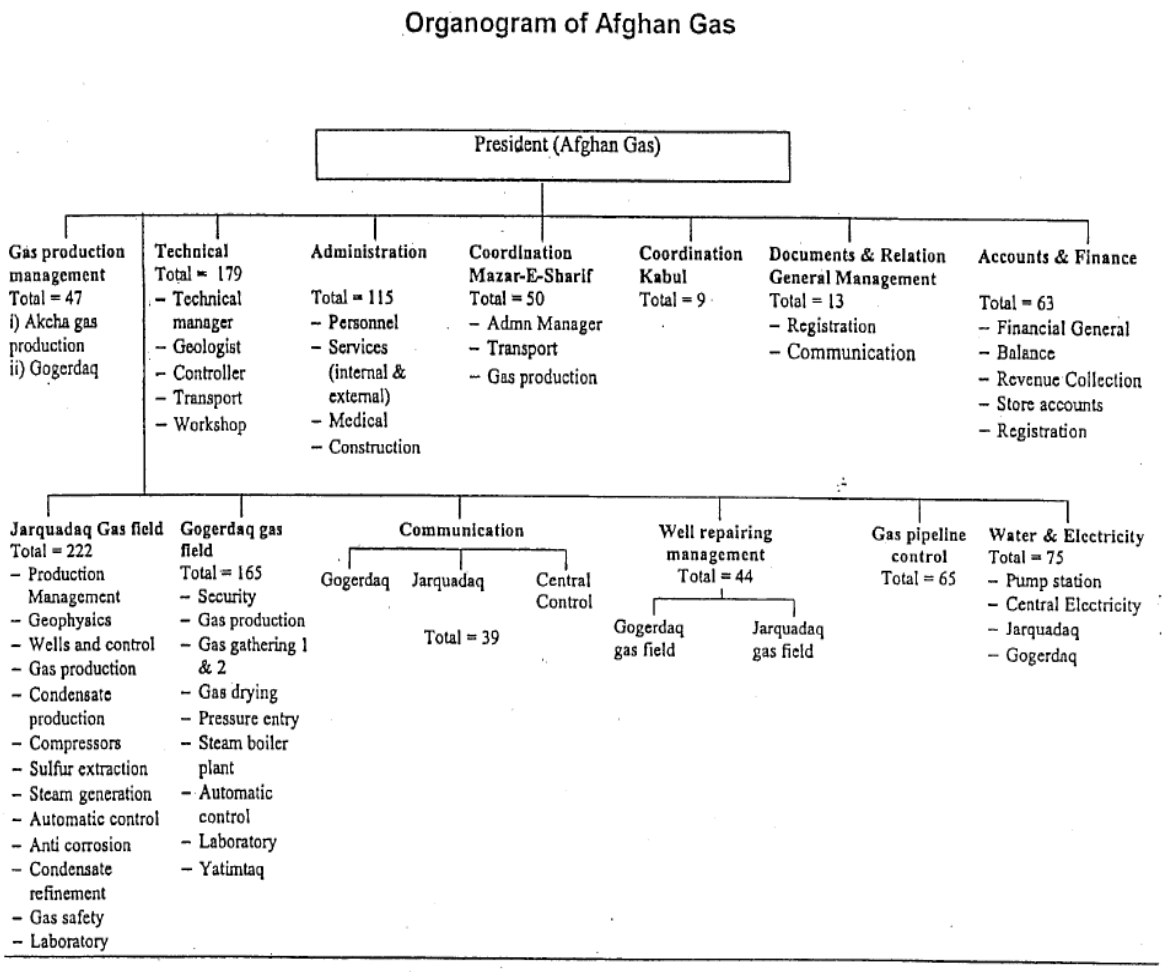

Figure 11: Afghan Gas Organizational Chart

About 320 employees or 30% are in technical and top administrative positions. The technical positions include geologists, gas experts, pipeline operators, and gas processing experts, among others. The breakdown of the skilled labor force in terms of education is below.

Since it is anticipated that Afghan Gas is going to be the supplier of the fuel for the IPP, there will be a need for extensive capacity building both on the technical as well as the management side to ensure that Afghan Gas can operate as a modern and capable gas company in order to fulfill its obligations.

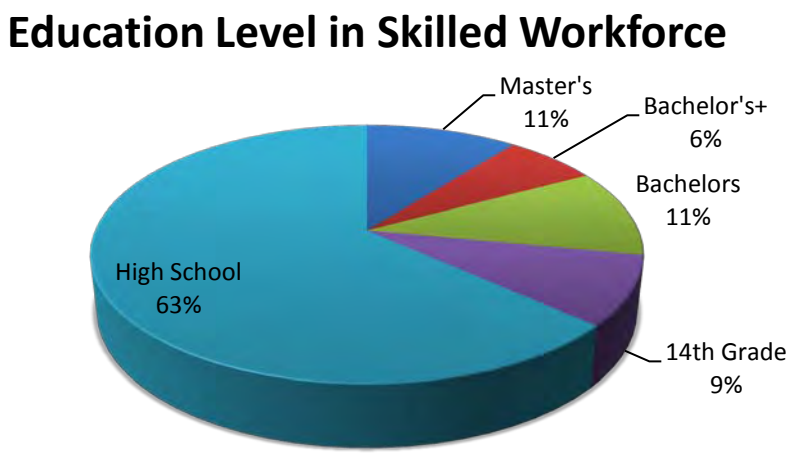

Per the chart above, about 37% of the skilled labor force has an educational level of 14th grade or above. Given the location of the enterprise, Sheberghan, and the compensation level, government pay scale, 37% above 14th-grade level is very encouraging. However, capacity building absorption does not only depend of the educational background of the skilled labor force but also on their age. The breakdown by age of the skilled labor force is given in the diagram below.

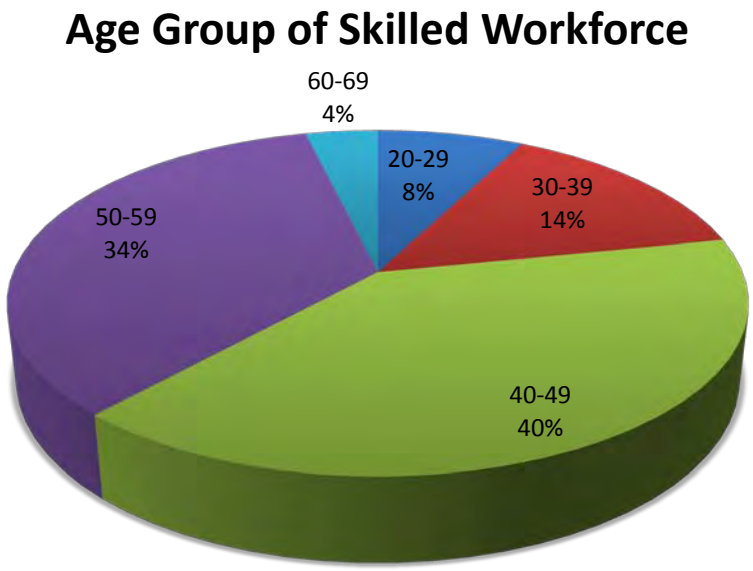

Contrary to the general belief that Afghan Gas has an ageing skilled labor population, the above chart demonstrates that 60% of the Afghan Gas skilled labor force are in their forties or below. This further demonstrates that Afghan Gas employees not only have the educational background to receive training but also are a trainable workforce from an age perspective.

Additionally, as part of our capacity building efforts, the SGFDP team conducted several training workshops for the Afghan Gas and the NHU employees in Sheberghan on gas and gas related infrastructure topics. The Afghan Gas participants showed keen interest in the modern gas production and operations and asked for further training not only on technical issues but also topics related to

management and operations of a modern gas company. This display of "big picture" thinking was one of the most positive aspects of the SGFDP team's trip to Sheberghan and suggests that Afghan Gas could play a major role in the exploration and exploitation of natural gas in Sheberghan.

Natural Gas Operations

The natural gas business can be separated into three main sectors:

- Upstream: exploration and production of natural gas
- Midstream: gathering of natural gas production, and processing of natural gas to remove impurities such as natural gas liquids (NGLs), water, H_2S, CO^2, and other components
- Downstream: transmission of pipeline quality natural gas to markets, and distribution of natural gas to end-users – industrial, power, commercial, and residential

Both planning and operational expertise is required for each of these sectors.

Upstream

After acquisition of the rights to explore for hydrocarbons, a firm may conduct geological and geophysical testing to identify subsurface prospects that may contain hydrocarbons. An exploration well is drilled to determine whether hydrocarbons are actually present. If the well is successful, additional wells will be drilled to delineate the extent of the hydrocarbon reservoir and to enable commercial production of gas from the reservoir. The gas company may drill its own wells, or it may contract with service companies to do so. In either case, the company must have technically qualified personnel to conduct or supervise drilling and production operations.

There are two categories of gas. Associated gas is natural gas that is produced from a reservoir whose main production is oil. Non-associated gas is natural gas that is produced from a reservoir whose main production is natural gas. Light oil, known as condensate, may be simultaneously produced with non-associated natural gas. The primary chemical component of natural gas is methane (CH^4). Both associated and non-associated may contain impurities such as ethane, propane, butane, pentane and heavier hydrocarbons, water, hydrogen sulfide (H_2S), carbon dioxide (CO^2), helium, nitrogen, or other compounds.

Midstream

Midstream operations involve gathering of produced natural gas in small diameter gas pipeline gathering systems, and processing of the natural gas to pipeline quality specifications by removing impurities. Natural gas liquids can be removed and sold either as LPG or as a petrochemical feedstock. Water is removed to prevent formation of gas hydrates, solid compounds that can form above the freezing temperature of water. H_2S, which is a toxic gas, and/or CO^2, which has no heating value, are also removed. There are various possible methods for disposing of H_2S and CO^2, including flaring, further processing to recover elemental sulfur, or injection into a disposal well.

Many countries use underground storage of natural gas to provide security of supply, or to accommodate seasonal fluctuations in the demand for natural gas. Operation of natural gas storage facilities would be considered a midstream activity.

Downstream

Delivery of gas to end-users is referred to as downstream activity. Large diameter natural gas transmission pipelines may be used to transport gas over relatively long distances to markets. End users include industrial firms such as fertilizer plants, gas fired-power plants, commercial customers such as offices, apartment buildings or small businesses, and residential customers. Gas delivery to commercial and residential customers occurs through distribution networks within towns or villages. Accurate metering of supplied gas volumes to each customer, as well as billing for those gas supplies, is essential for the operation of a profitable natural gas business.

Gas Company Operations

Each of these sectors requires electronic monitoring, control and detection systems, and operational personnel to ensure the reliable and safe operation of the natural gas supply chain. It is necessary to conduct regular safety inspections within each sector to reduce the risk of accidents. A vertically integrated natural gas firm operates in all three sectors. In many countries, there are also firms that specialize in only one of the sectors, for example a producer of natural gas, or a local distribution company that sells gas to end-users. Whenever there is a purchase or sale of natural gas, there must be business personnel to ensure accurate custody transfer, billing and collections.

Since Afghan Gas is anticipated to be a vertically-integrated gas company—having responsibilities for upstream, midstream, and downstream functions, it would be beneficial to integrate NHU and Afghan Gas in order to create one corporatized entity. The expertise that the NHU brings to the table will enhance existing Afghan capabilities and will ensure the creation of a natural gas company that will be the foundation of a modern gas sector for Afghanistan.

Beginning the corporatization process will be critical to taking further steps with Afghan Gas, such as reorganization, negotiating a possible management contract, and coming up with a compensation plan that will retain and attract the required skilled workforce to carry out its responsibilities. The corporatization process will take a few years to complete and transform Afghan Gas into a company that is capable of running its affairs in an efficient manner; however, starting this process early on will have tremendous benefits for Afghan Gas. There are several major activities both in support of the IPP and the NFPP that are going to commence in the next six months to a year, carried out by experienced regional or international firms. These activities include the replacement of the gas transmission pipeline from Sheberghan to Mazar by TFBSO; drilling of one or two new wells and rehabilitation of two wells in the Juma/Bashikurd fields with funding from USAID; the design and construction of a gas sweetening plant for the NFPP by ADB; the refurbishment of the compressor station in Khoja Gogerdak; and another gas sweetening plant for the IPP, once funding has been secured. Each of these activities will provide an excellent opportunity for on-the-job training for the Afghan Gas engineers.

Availability of Skilled Labor in the North

During the last 30 years the gas sector in Afghanistan has suffered tremendously from shortage of not only lack of proper equipment and supplies but also skilled labor. However, on the skilled labor issue, there is an opportunity to start to reverse this process. In the North, there are currently three vocational training centers and Balkh University's engineering college that train high school graduates in the oil and gas sector. The table below has the details of each institution.[83]

Table 9. Training Centers in Northern Afghanistan

Institution	Field of Study	Location	Duration	Number of Students Graduated Annually
Sheberghan Oil & Gas Institute (14th grade graduate)	Oil &Gas Geology	Sheberghan City near Andkhoy port	Two years (4 semesters)	30
Balkh Oil & Gas Institute (14thgrade graduate)	Oil &Gas Geology	Sheberghan City near Andkhoy port	Two years (4 semesters)	60
Takhar Oil & Gas Institute (14th grade graduate)	Oil &Gas Geology	Taluqan City	Two years (4 semesters)	30
Balkh University (Faculty of Engineering)	Hard Rock's Mines & General Geology	Mazar-i-Sharif	Four years (8 semesters)	50

There are about 170 graduates every year from these institutions. However, only about 6 to 8 graduates are hired by the Afghan Gas and NHU, the two major employers in the oil and gas sector in the country. In our conversations with the Afghan Gas and NHU, they are very confident that there will not be any shortage of trainable skilled labor due to the presence of the vocational training centers and Balkh University's Faculty of Engineering.

In order to proceed with the IPP transaction, skilled labor force is needed for both, the gas as well as the power side. Afghan Gas, as the supplier of fuel to the IPP, has the potential to operate as a gas company, given it receives appropriate training, tools, and equipment. In order for Afghan Gas to recruit new talent and keep its existing skilled labor it needs to have a very competitive compensation plan and work closely with the vocational training centers and Balkh University to create appropriate programs that are relevant to the oil and gas sector in Afghanistan. Designing the right programs in these vocational training centers and Balkh University will ensure producing graduates that are ready to hit the ground running once they are hired by Afghan Gas or any other company in the gas sector in Afghanistan.

The issue of availability of skilled labor is a bit more complex for the power sector, especially in the north. A well-managed power plant requires the following types of staff;

[83] This information was provided by Deputy Chief of Afghan Gas over the phone to our team on March 2, 2011.

- Management
- Financial
- Engineering
- Operational staff
- Human resources

A base loaded power plant will operate on a three shift basis and therefore necessary operational staff is required to cover all shifts. In developed countries a well-trained and skilled labor force is kept to a minimum. For example, a 200 MW power plant in the U.S. would have a total of 40-50 full time employees. In comparison the 48 MW power plant in Mazar-e-Sharif has 236 employees.

It is reasonable to assume that, in the absence of any DABS generation in Sheberghan, there is no local expertise to manage or operate a modern power plant. The nearest expertise may be available at the fertilizer power plant in Mazar-e-Sharif. IPP management will need to rely on importing and contracting with key staff from outside Afghanistan. However, the SGFDP team highly recommends that the IPP come up with an “Afghanization” plan whereby they replace a percentage of expat workers in the plant by Afghans each year so that there is knowledge transfer to the next generation of Afghans who will be managing and operating similar power plants in the future.

VII. ENVIRONMENTAL DOCUMENTATION REQUIREMENTS

Construction and operation of power plants will always have some environmental impact that could involve displacement of the population, air quality, water availability and rights, noise impacts, and groundwater contamination. Therefore, both USAID 22 CFR216 regulations as well as the Afghanistan National Environmental Protection Agency require a detailed environmental assessment report prior to initiating construction of such projects.

USAID Environmental Regulations

It is important to note that 22 CFR 216 regulates environmental documentation and procedures for all infrastructure projects funded by USAID. The Procedures are Federal Regulations and therefore, it is imperative that they be followed in the development of Agency programs. A description of an Environmental Assessment that satisfies USID requirements is as follows;

a. General Purpose

The purpose of the Environmental Assessment is to provide Agency and host country decision-makers with a full discussion of significant environmental effects of a proposed action. It includes alternatives which would avoid or minimize adverse effects or enhance the quality of the environment so that the expected benefits of development objectives can be weighed against any adverse impacts upon the human environment or any irreversible or irretrievable commitment of resources.

b. Collaboration with Affected Nation on Preparation

Collaboration in obtaining data, conducting analyses and considering alternatives will help build an awareness of development associated environmental problems in less developed countries as well as assist in building an indigenous institutional capability to deal nationally with such problems. Missions, Bureaus and Offices will collaborate with affected countries to the maximum extent possible, in the development of any Environmental Assessments and consideration of environmental consequences as set forth therein.

c. Content and Form

The Environmental Assessment shall be based upon the scoping statement and shall address the following elements, as appropriate:

(1) **Summary**. The summary shall stress the major conclusions, areas of controversy, if any, and the issues to be resolved.

(2) **Purpose**. The Environmental Assessment shall briefly specify the underlying purpose and need to which the Agency is responding in proposing the alternatives including the proposed action.

(3) **Alternatives Including the Proposed Action**. This section should present the environmental impacts of the proposal and its alternatives in comparative form, thereby sharpening the issues and providing a clear basis for choice among options

by the decision-maker. This section should explore and evaluate reasonable alternatives and briefly discuss the reasons for eliminating those alternatives which were not included in the detailed study; devote substantial treatment to each alternative considered in detail including the proposed action so that reviewers may evaluate their comparative merits; include the alternative of no action; identify the Agency's preferred alternative or alternatives, if one or more exists; include appropriate mitigation measures not already included in the proposed action or alternatives.

(4) **Affected Environment**. The Environmental Assessment shall succinctly describe the environment of the area(s) to be affected or created by the alternatives under consideration. The descriptions shall be no longer than is necessary to understand the effects of the alternatives. Data and analyses in the Environmental Assessment shall be commensurate with the significance of the impact with less important material summarized, consolidated or simply referenced.

(5) **Environmental Consequences**. This section forms the analytic basis for the comparisons under paragraph (c)(3) of this section. It will include the environmental impacts of the alternatives including the proposed action; any adverse effects that cannot be avoided should the proposed action be implemented; the relationship between short-term uses of the environment and the maintenance and enhancement of long-term productivity; and any irreversible or irretrievable commitments of resources which would be involved in the proposal should it be implemented. It should not duplicate discussions in paragraph (c)(3) of this section. This section of the Environmental Assessment should include discussions of direct effects and their significance; indirect effects and their significance; possible conflicts between the proposed action and land use plans, policies and controls for the areas concerned; energy requirements and conservation potential of various alternatives and mitigation measures; natural or depletable resource requirements and conservation potential of various requirements and mitigation measures; urban quality; historic and cultural resources and the design of the built environment, including the reuse and conservation potential of various alternatives and mitigation measures; and means to mitigate adverse environmental impacts.

(6) **List of Preparers**. The Environmental Assessment shall list the names and qualifications (expertise, experience, professional discipline) of the persons primarily responsible for preparing the Environmental Assessment or significant background papers.

(7) **Appendix**. An appendix may be prepared.

d. Program Assessment

Program Assessments may be appropriate in order to assess the environmental effects of a number of individual actions and their cumulative environmental impact in a given country or geographic area, or the environmental impacts that are generic or common to a class of agency actions, or other activities which are not country-specific. In these cases, a single, programmatic assessment will be prepared in A.I.D./Washington and circulated to appropriate overseas Missions, host governments, and to interested parties within the United States. To the extent practicable, the form and content of the programmatic Environmental Assessment

will be the same as for project Assessments. Subsequent Environmental Assessments on major individual actions will only be necessary where such follow-on or subsequent activities may have significant environmental impacts on specific countries where such impacts have not been adequately evaluated in the programmatic Environmental Assessment. Other programmatic evaluations of class of actions may be conducted in an effort to establish additional categorical exclusions or design standards or criteria for such classes that will eliminate or minimize adverse effects of such actions, enhance the environmental effect of such actions or reduce the amount of paperwork or time involved in these procedures. Programmatic evaluations conducted for the purpose of establishing additional categorical exclusions under §216.2(c) or design considerations that will eliminate significant effects for classes of actions shall be made available for public comment before the categorical exclusions or design standards or criteria are adopted by A.I.D. Notice of the availability of such documents shall be published in the *Federal Register*. Additional categorical exclusions shall be adopted by A.I.D. upon the approval of the Administrator, and design consideration in accordance with usual agency procedures.

e. Consultation and Review

(1) When Environmental Assessments are prepared on activities carried out within or focused on specific developing countries, consultation will be held between A.I.D. staff and the host government both in the early stages of preparation and on the results and significance of the completed Assessment before the project is authorized.

(2) Missions will encourage the host government to make the Environmental Assessment available to the general public of the recipient country. If Environmental Assessments are prepared on activities which are not country specific, the Assessment will be circulated by the Environmental Coordinator to A.I.D.'s Overseas Missions and interested governments for information, guidance and comment and will be made available in the U.S. to interested parties.

f. Effect in Other Countries

In a situation where an analysis indicates that potential effects may extend beyond the national boundaries of a recipient country and adjacent foreign nations may be affected, USAID will urge the recipient country to consult with such countries in advance of project approval and to negotiate mutually acceptable accommodations.

g. Classified Material

Environmental Assessments will not normally include classified or administratively controlled material. However, there may be situations where environmental aspects cannot be adequately discussed without the inclusion of such material. The handling and disclosure of classified or administratively controlled material shall be governed by 22 CFR Part 9. Those portions of an Environmental Assessment which are not classified or administratively controlled will be made available to persons outside the Agency as provided for in 22 CFR Part 212.

Afghanistan National Environmental Protection Agency Regulations

In addition to USAID environmental documentation requirements the government of Afghanistan through its National Environmental Protection Agency (NEPA) has promulgated a national environmental impact assessment policy that requires an environmental impact assessment (EIA) for all major construction projects. The objectives of EIA have been described as:

- To ensure that environmental considerations are explicitly addressed and incorporated into the development decision making process;
- To anticipate and avoid, minimize or offset the adverse significant biophysical, social and other relevant effects of development proposals;
- To protect the productivity and capacity of natural systems and the ecological processes which maintain their functions; and
- To promote development that is sustainable and optimizes resource use and management opportunities.

VIII. CONCLUSIONS ON REQUIRED INFRASTRUCTURE AND RELATED COSTS

The Gas Infrastructure

The cost to deliver pipeline quality natural gas to the power plant can be estimated at about $118M. This figure also assumes that the rehabilitation and drilling work for the four wells in Juma and Bashikurd will both be done within the budget and provide the necessary 1.5 MMCM per day to the gas processing plant. By far, the largest single component of the cost estimate is the $73 million (est.) gas sweetening plant, yet to be funded. The costs for gas, power, and related infrastructure in Table 10, are rough estimates of capital construction costs only and do not factor in operation and maintenance, depletion rates, additional field development requirements and other costs.

The Power Infrastructure

In conclusion the estimated investments required to engineer and construct the infrastructure necessary for the evacuation of 200 MW of power from the IPP to the Naibabad switching station is shown in Table 10. One of the major issues related to the power infrastructure is the capacity of NEPS being able to transmit power to Kabul and beyond, not only from the IPP but also from the additional imported power from Uzbekistan, Tajikistan, and Turkmenistan. As mentioned earlier, these issues are being studied and the results are expected to be published in the upcoming months.

It is assumed that the IPP will select the appropriate and most suitable technology. The fuel costs and overall plant efficiency will have a direct impact on technology selection. A detailed environmental impact assessment report (EIA) is required to satisfy 22 CFR 216 requirements for the construction of the power plant and could cost between $0.5 million to $1.0 million. The cost associated with preparing an EIA is not included in table 10.

Water availability

The water infrastructure component is a small part of the overall Sheberghan IPP proposal, but extremely important in terms of overall efficiencies at the power plant. The difference between efficiencies for simple and combined cycle systems ranges from 20 to 25%. This means that less quantity of gas can produce the same amount of electricity, thus leading to less drilling and rehabilitation work for the Afghan Gas. As stated above, the water usage and efficiency will depend on the ultimate selection of technology by the IPP. However, based on the information obtained by the SGFDP team, it is likely that sufficient water exists in the Sheberghan area to support a wide range of technology options for the IPP, and sufficient water resources are available to support a 200 MW power plant, whether simple or combined cycle.

Afghan Gas Assessment

Since Afghan Gas is anticipated to play a major role and be the supplier of the fuel to the IPP, it would be beneficial to integrate the Northern Hydrocarbon Unit (NHU) and Afghan Gas in order to create one corporatized entity. This entity would be a

vertically-integrated gas company—having responsibilities for upstream, midstream, and downstream functions. The expertise that the NHU brings to the table will enhance existing Afghan capabilities and will ensure the creation of a natural gas company that will be the foundation of a modern gas sector for Afghanistan.

Table 10. Estimated Capital Costs for Gas, Power, and Other Related Projects

Infrastructure	Estimated Costs (USD)
Technology	
Simple Gas Cycle Plant	$140,000,000
Combined Cycle Plant	$200,000,000
Gas Fired Steam Turbine	$240,000,000
Reciprocating engines/ Gas Fired Generator	$200,000,000
Gas	
1) Rehabilitation and Drilling Work for Bashikurd No. 3, Bashikurd No. 9, Bashikurd No. 2 and Juma No. 2	$37,000,000
2) 8" sour gas gathering lines in Juma and Bashikurd	$1,415,271
3) Natural gas gathering manifold and knockout separator in Bashikurd	$2,000,000
4) 12" sour gas pipeline between Bashikurd gathering manifold and the gas processing plant	$6,585,507
5) Natural gas sweetening and conditioning plant	$59,466,000
6) 12" sweet gas pipeline from natural gas sweetening and conditioning plant to the Independent Power Project (IPP) plant	$1,381,575
7) Metering and pressure regulating station between the gas processing plant and the IPP	$4,000,000
Subtotal for 7 major project activities	$111,848,353
Natural gas sweetening and conditioning plant waste disposal options	
1) Claus process sulfur recovery unit	$12,500,000
2) Reinjection well	$13,000,000
Total Estimated Projects Cost	$124,348,353
Water	
Drilling of Two Wells	$50,000
Water Pumping Station/ Civil Works	$200,000
12 km Water Pipeline	$1,600,000
Total	$1,850,000
Transmission Line/Substations	
Step up transformers in Sheberghan 11 kV / 220kV	$5,600,000
Step up transformer in Sheberghan 11 kV / 220kV	$500,000
220 kV Transmission line from IPP to Mazar-i-Sharif substation	$43,400,000
Step down transformer in Mazar 220 kV/ 20 kV	$4,500,000
Total	$54,000,000