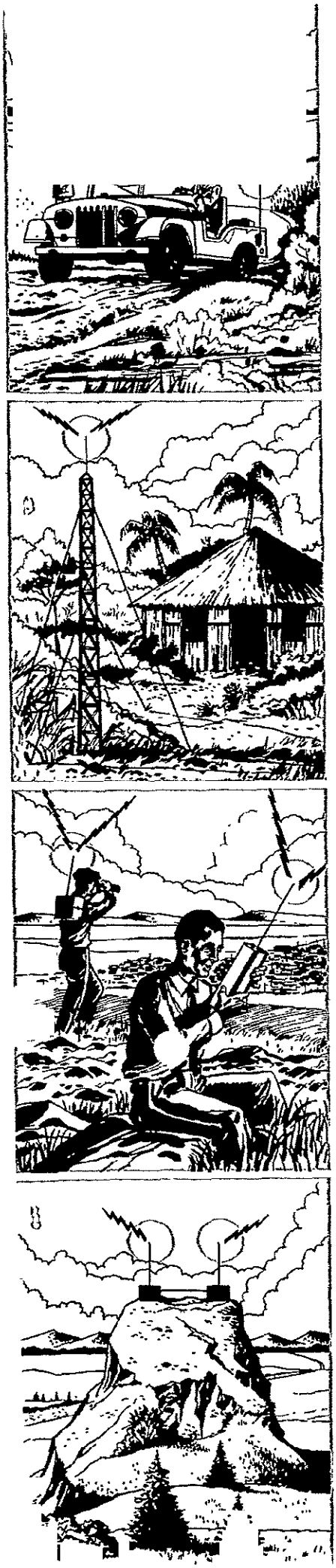

STANDARD SPECIFICATIONS
FOR
PUBLIC SAFETY

Multipurpose
VHF-FM TACTICAL TRANSCEIVERS OPS/FM-1B and OPS/FM-5B

Office of Public Safety
Technical Services Division
Agency for International Development
Department of State
Washington, D.C.

February 1, 1968

STANDARD SPECIFICATIONS
FOR
PUBLIC SAFETY

Multipurpose
VHF-FM TACTICAL TRANSCEIVERS
OPS/FM-1B and OPS/FM-5B

Office of Public Safety
Technical Services Division
Agency for International Development
Department of State
Washington, D.C.

February 1, 1968

INDEX

		Page
INTRODUCTION		1
10.0	OPS/FM-1B TRANSCEIVER	2
10.1	General	2
10.2	Transmitter	4
10.3	Receiver	6
10.4	Operating Controls and Adjustments	8
10.5	Connectors	9
10.6	Protective devices	11
10.7	Design and Construction Details	11
10.8	Supporting Items	20
10.9	Normally Required Accessories	21
10.9.1	OPS/CC-1 Shoulder Carrying Strap	21
10.9.2	OPS/AE-2 Adapter-Connector (Antenna)	21
10.9.3	OPS/AE-1 Whip Antenna (Element)	21
10.10	Optional Accessories	22
10.10.1	OPS/AE-7 Transmission Line (RG-58A/U)	22
10.10.2	OPS/AE-8 Transmission Line (RG-8/U)	22
10.10.3	OPS/AE-9 Coaxial Connector Union	22
10.10.4	OPS/HS-1 Headset	22
10.10.5	OPS/CT-2 External Battery Cable	22
10.10.6	OPS/BS-25A Nickel-Cadmium Battery	23
10.10.7	OPS/RU-5A Back-to-Back One Way Repeater Kit	23
10.10.8	OPS/OS-25 Beacon Oscillator	24
10.10.9	OPS/KM-24 Two Frequency Conversion Kit	25
10.10.10	Spare Crystals	25
10.10.11	Spare Parts Kit	25
10.10.12	Spare PC-17 Printed Circuit Board Assembly	25
10.10.13	OPS/TS-13A Test Stand for Printed Circuit Board	25
10.10.14	OPS/TS-20 Test Set	26
10.10.15	Circuit Diagrams for Training	30
10.10.16	Instruction and Maintenance Manual	30

Page

11.0 OPS/FM-5B TRANSCEIVER 34

11.1 General 34
11.2 Transmitter 36
11.3 Receiver 36
11.4 Operating Controls and Adjustments 38
11.5 Connectors and Cable Assemblies 39
11.6 Protective and Indicating Devices 41
11.7 Design and Construction Details 43
11.8 Supporting Items 48
11. 9 Normally Required Accessories 48

11.9.1 OPS/CC-16 Carrying Case 48
11.9.4 OPS/AE-3 90° Coaxial Connector 49

11.10 Optional Accessories 49

11.10.5 OPS/AU-25 Fuse Holder for BS-15A 49
11.10.7 OPS/RU-6A Back-to-Back Two-way Repeater Kit 50
11.10.9 OPS/KM-25 Two Frequency Conversion Kit 50
11.10.17 OPS/AE-4 Ground Plane Antenna 51
11.10.18 OPS/AE-10 Tactical High Gain Antenna 52
11.10.19 OPS/AE-13 Tactical Log Periodic Antenna 53
11.10.20 OPS/AE-6 Magnetic Vehicle Antenna Mounting Bracket 54
11.10.21 OPS/AE-5 Gutter Mounting Bracket For Mobile Antenna 55
11.10.22 OPS/KA-8A Telegraph (MCW) Assembly 55
11.10.23 OPS/KM-13 Vehicle Noise Reduction Kit 56
11.10.24 OPS/PS-25 DC to DC Converter 57
11.10.25 OPS/AU/A-1 Mobile Mounting Bracket 58

12.0 OPS/PS/A-16 AC POWER SUPPLY 59

12.1 General 59
12.2 Power Supply Assembly Electrical Specifications 59
12.3 Power Supply Assembly Operating Controls, Adjustments . . . 61
12.4 Connectors and Cable Assemblies 62

Page

12.5 Protective Devices 63
12.6 Nickel Cadmium Battery Holder Assembly 64
12.7 Design and Construction 65
12.8 Optional Accessories 68

13.0 OPS/PA-20 POWER AMPLIFIER 70

13.1 General 70
13.2 PA-20 Electrical Specifications 72
13.3 Operating Controls and Adjustments 72
13.4 Connectors and Cable Assemblies 72
13.5 Protective and Indicating Devices 74
13.6 Design and Construction 75
13.7 Optional Accessories 79

14.0 QUALITY ASSURANCE PROVISIONS 80

14.1 Contractor's Inspection Responsibility 80
14.2 Contractor's Quality Control System 80
14.3 Standard Test Conditions 81
14.4 Preproduction Model Inspection 83
14.5 Inspection of End Item 83

14.5.1 Visual Examination 83
14.5.2 Electrical Inspection of End Item 87
14.5.3 Environmental Tests 92
14.5.4 Life Tests 94
14.5.5 Operational Inspection 94

LIST OF TABLES

TABLE I - Visual Inspection of Assembled Unit 84
TABLE II - Visual Inspection with Removal of Cabinet 85
TABLE III - OPS/FM-1B General Electrical Tests 87
TABLE IV - OPS/FM-5B General Electrical Tests 88
TABLE V - OPS/FM-1B Comprehensive Electrical Tests 89
TABLE VI - OPS/FM-5B Comprehensive Electrical Tests 91
TABLE VII - Temperature Stability Test 93

FIGURES

		Page
1	- OPS/FM-1B Portable VHF-FM Transceiver	113
2	- OPS/FM-1B Transceiver Cabinet	114
3	- OPS/CC-1 Shoulder Carrying Strap	115
4	- OPS/FM-1B Control Head	116
5	- Printed Circuit Board PC-17	117
6	- OPS/FM-5B Man-Pack VHF-FM Transceiver	118
7	- OPS/FM-5B Transceiver Cabinet with Battery Holder Assembly OPS/BS-15A	119
8	- OPS/FM-5B Transceiver Cabinet	120
9	- OPS/BS-15A Battery Holder Assembly	121
10	- Catch and Strike Details	122
11	- OPS/AU/A-1 Universal Mounting Bracket	123
12	- OPS/FM-1B and OPS/FM-5B Schematic Diagram	125
13	- OPS/PS/A-16 AC Power Supply	127
14	- OPS/CT-5 Universal AC Plug	128
15	- OPS/PS/A-16 Schematic Diagram	129
16	- OPS/PA-20 20-watt Power Amplifier	130
17	- OPS/PA-20 Schematic Diagram	131
18	- OPS/RU-5A Back-to-back repeater (Block Diagram)	132
19	- OPS/RA-6A Back-to-back repeater (Block Diagram)	133
20	- OPS/RU-6A Schematic Diagram	134
21	- OPS/KA-8A Telegraph (MCW) Module	135
22	- OPS/KA-8A Schematic Diagram	136
23	- OPS/OS-25 Schematic Diagram	137
24	- OPS/TS-20 Test Set	138
25	- OPS/AE-4 Antenna Base and AE-1 Element	139
26	- OPS/AE-10 High Gain Tactical Antenna	140
27	- OPS/AE-13 Tactical Log Periodic Antenna	141

APPENDIX

I	Crystal Specifications	95
II	Component List	98
III	Patent Right Clause	106

IMPORTANT NOTICE

This standard for VHF/FM radio equipment (OPS/FM-1B and OPS/FM-5B) has been approved by the Office of Public Safety for use in worldwide public safety communications programs. The standard is mandatory for use effective April 1, 1968 and supersedes all previous standards for this type equipment.

Correspondence regarding this standard, other than from prospective bidders, should be addressed to the Director, Office of Public Safety, Agency for International Development, Department of State, Washington, D.C. 20523.

INTRODUCTION

The following equipment specifications[1/] are prepared as an outgrowth of operational requirements within Public Safety programs for low-cost VHF-FM transceivers suited to paramilitary and foreign police operations. The development of these specifications reflects efforts on the part of the Office of Public Safety, A.I.D., to develop communications equipment which will meet particular operational requirements.

Many of the design features identified for the OPS/FM-1B and OPS/FM-5B transceivers have been specified as the result of careful assessment of the OPS/FM-1A and OPS/FM-5A earlier production models which have been exposed to actual field experience and engineering evaluation over an extended period of time.

These specifications, affecting 10,000 identical units currently in use so far, also identify objectives of the Office of Public Safety to establish a long range standardization program for VHF/FM tactical communications equipment using specific circuit designs, components and related accessories.

The benefits derived from such a standardization program are many and obvious.

1/ To protect the interests of the United States Government in its development of VHF-FM tactical communications equipment, the offeror is subject to and shall comply with the Patents Right Clause set forth in Appendix III, with respect to any proprietary rights to the OPS/FM-1B and OPS/FM-5B equipment and accessories.

10.0 OPS/FM-1B TRANSCEIVER

10.1 GENERAL

The OPS/FM-1B is a hand-held, fully-transistorized, FM transceiver which is capable of operating on either of two crystal controlled frequencies in the 148-170 MHz band. In addition to push-to-talk voice operation, accessory items shall permit the FM-1B to be adaptable to MCW, Beacon and Repeater operation. It is normally powered by eight (8) carbon zinc "D" cells but may use an external 12 volt DC source or nickel\cadmium batteries.

Transceiver cabinet, antenna, fitting and all associated external items shall be treated to be non-reflective and shall have no white or bright metal surface. The transceivers are to be aligned and tuned by the manufacturer. Frequencies will be provided to the successful bidder.

10.1.1 Transceiver Operating Voltage

The transceiver shall be capable of operating from a nominal 12.0 V DC source which can vary from 10 to 15V. Between 12 and 15 V DC, the transceiver shall perform in accordance with all specifications. Between 10 and 12 V DC, the transeiver shall perform as specified except that a 3 dB reduction in transmitter RF power output and receiver AF power output will be acceptable.

10.1.2 Sources of Power

The transceiver will normally be operated from eight (8) internal 1.5-volt "D" cells. It shall also operate from an external 12-volt DC source or from nickel cadmium batteries substituted in place of the eight "D" cells.

10.1.3 Duty Cycle

A. For the purpose of estimating the overall power consumption of the transceiver, the following formula will be used:

6 seconds transmit; 6 seconds receive; and 48 seconds standby with receiver squelched, for each minute of transceiver operation.

B. The transmitter shall be capable of operating for two minutes out of five minutes.

C. The receiver shall be designed for continuous operation.

10.1.4 Current Drain

Maximum allowable current drain at 12 volts DC:

A. Transmitting, at full rated power output: 400 mA. Transmitting at RF output in excess of 1.5 watts, 30 mA shall be allowed for every additional 0.1 watts of RF output.

B. Receiving at full rated audio output: 50 mA.

C. Standby, receiver squelched: 8 mA.

10.1.5 Antenna Impedance

A. The transmitter and receiver shall be designed for an antenna with an impedance of 50 ohms resistive in accordance with all specifications.

B. Transmitter must operate properly and be stable within frequency range specified in Section 10.1.6 and under antenna mismatch conditions presenting VSWR up to 3.5:1.

10.1.6 Frequency Range

Unless otherwise specified, the transceiver shall cover the standard frequency range of 148-170 MHz. Optionally, the frequency range may be specified as either 146-168 MHz or 150-172 MHz, in which case the transceiver shall operate in accordance with all specifications contained herein.

10.1.7 Crystal Requirements

A. Each transceiver is to be fully equipped with one (1) set of crystals. Crystals shall be in accordance with specifications contained in Appendix I.

B. Transmitter and Receiver oscillator crystals are to be plug-in types. Crystal retainers shall be employed to hold the crystals securely in their position. Crystal sockets shall be Connector Corporation GS-109 or equal.

10.1.8 Two Frequency Operation

A. When two (2) frequency operation is specified, the FM-1B will be provided with the dual sets of crystals required and with a channel change over switch located on the top control plate.

B. Two (2) frequency oscillator circuits must be an integral part of board assembly and only crystals and switch shall be installed by manufacturer or in the field when so specified. Cable assembly to two (2) frequency switch shall be terminated on terminal strip in close proximity to the switch.

C. All specifications shall apply with frequency seperation between channels up to 600 kHz. With frequency separation to 950 kHz, transmitter R.F. output shall not be degraded more than 1 dB and receiver sensitivity shall be degraded no more than 3 dB.

10.1.9 Size and Weight

The FM-1B transceiver shall be no larger than 3x3x11.7 inches. With whip antenna and batteries "D" cells in place, its weight shall be less than five (5) pounds.

10.2 TRANSMITTER

10.2.1 Minimum Carrier Power Output

Minimum RF power output over the full frequency range shall be 1.5 watts at 12 volts, as defined and tested in EIA Standard RS-152A, Section 2.

10.2.2 Carrier Frequency Stability

A. The total frequency drift (Wide Band ± 15 kHz) for any cause shall not exceed $\pm .0025\%$ of the specified center frequency from -30° to $+60^{\circ}$ C ambient.

B. The total frequency drift (Narrow Band ± 5 kHz) for any cause shall not exceed $\pm .001\%$ of the specified center frequency from -30° to $+60^{\circ}$ C ambient.

10.2.3 Modulation

The transmitter shall be provided for wideband (± 15 kHz deviation) operation unless otherwise specified. 40 F3 modulation to be pre-emphasized in accordance with EIA standards. Transmitter deviation control must be adjustable to permit operation for narrow band (± 5 kHz deviation) without any change in specifications contained section 10.2.

10.2.4 Spurious and Harmonic Radiation

All spurious radiation shall be attenuated below the maximum level of emission of the carrier in accordance with the following formula:

Spurious attenuation in dB = $43 + 10 \log_{10}$ (power output in watts)

10.2.5 FM Hum and Noise Level

A. At least 40 dB below standard test modulation where full-rated system deviation is ± 15 kHz ("D" cell supply or ext. 12- volt battery not charging).

B. At least 35 dB below standard test modulation where full rated system deviation is ± 5 kHz.

10.2.6 AM Hum and Noise Level

The ratio of the DC voltage detected from the carrier to the peak AC voltage shall not exceed 35 dB.

10.2.7 Modulation Limiting

Full system deviation shall not be exceeded for any frequency from 400-2500 Hz for an input level 20 dB above the level producing 2/3 rated system deviation at 1000 Hz. An audio low-pass filter shall be installed

between the modulation limiter and the modulated stage; EIA Standard RS-152-A, paragraph 6.4 applies.

10.2.8 Audio Frequency Hormonic Distortion

Less than 10% under standard test modulation.

10.2.9 Audio Frequency Response

The audio response shall not vary more than +2 or -8 dB from a true 6 dB per octave pre-emphasis characteristic from 400 to 2500 Hz as referred to the 1000 Hz level.

10.3 RECEIVER

10.3.1 Sensitivity

A. 0.6 uV for 20 dB quieting on ±15 kHz deviation system, as defined and tested in EIA Standard RS-204, section 4.

B. 0.6 uV for 20 dB quieting on ±5 kHz deviation system, as defined and tested in EIA Standard RS-204, section 4.

C. The minimum usable sensitivity shall be 0.5 uV with 12 dB SINAD method, as defined and tested in EIA Standard RS-204, section 3.

10.3.2 Squelch Sensitivity

The minimum threshold squelch sensitivity shall be 0.3 uV. The maximum tight squelch sensitivity shall be 2.0 uV. as defined and tested in EIA Standard RS-204, section 5.

10.3.3 Modulation Acceptance Bandwidth

The modulation acceptance bandwidth shall not be less than the rated system deviation for which the receiver is intended, as defined and tested in EIA Standard RS-204, Section 6.

10.3.4 Adjacent Channel Selectivity

A. The adjacent channel selectivity for ±15 kHz deviation shall be a minimum of ~~50~~ 70 dB at ±50 kHz.

B. The adjacent channel selectivity for ±5 kHz deviation shall be a minimum of ~~50~~ 70 dB at ±30 kHz.

C. The above specifications relate to two (2) generator SINAD method as defined and tested in EIA Standard RS-204, Section 7.

D. The selectivity of the receiver shall be capable of being converted from wide-band to narrow-band by replacement of fixed-tuned filters (Clevite type TCF4-12D36A-1, TCF6-30D55A-1 or equal) with only minor component substitution and/or replacement.

10.3.5 Spurious and Image Response Attenuation

At least ~~40~~ 60 dB down from the actual receiver sensitivity at all frequencies, as defined and tested in EIA Standard RS-204, Section 8.

10.3.6 Oscillator Stability

The total frequency drift of the receiver oscillator, for any cause, shall not exceed ±0.0025% of the specified operating frequency from -30° to $+60^{\circ}$ C ambient. The local oscillator must be electrically tunable so that the receiver may be placed on the exact operating frequency by means of an internal adjustment.

10.3.7 Residual Hum and Noise Level

At least ~~40~~ 60.50 dB down from rated output with standard test modulation ("D" cell supply or external 12-volt battery not charging).

10.3.8 Audio Frequency Response

Within +2 and -6 dB of a standard 6 dB per octave de-emphasis curve over the range of 400-3000 Hz as referred to 1000 Hz level.

10.3.9 Audio Power Output

At least 150 mW to speaker; at least 2.5 mW into the HS-1 headset specified in section 10.10.4 via the earphone jack.

10.3.10 Audio Distortion

Less than 10% at rated power output under standard test modulation.

10.3.11 Undesired Radiated Power

Undesired radiated power shall be limited to conform with FCC rules, part 15, subject C, 15.62, as amended.

10.4 OPERATING CONTROLS AND ADJUSTMENTS

10.4.1 On-Off Switch Volume Control

A. An ON-OFF heavy-duty rotary switch in union with a heavy-duty potentiometer shall be used. The switch must make a noticeable audible click. The volume control circuitry shall be designed for a logarithmic taper. At minimum setting, fully counter clockwise with switch ON, a nominal 10 mW audible signal should be heard in the speaker.

B. This control shall be mounted on the top panel of the transceiver. A durable, black, cylindrical metal knob, 0.625 inches in diameter, with an Allen type set screw shall be used. A solid pin shall be placed in the knob to limit the travel of the control within a recess provided in the top panel. The control shall be protected against entry of water into the transceiver.

10.4.2 Squelch Control

A heavy-duty potentiometer shall be screwdriver (alignment tool) adjustable and accessible from the top panel. The opening shall be protected by a black, snap-type waterproof cover (Jan Hardware J-1304 or equal). This control shall vary the squelch voltage in accordance with Section 10.3.2.

10.4.3 Push-To-Talk Switch

A. The push-to-talk switch shall be a micro-switch permanently affixed to the printed circuit board.

B. The push-to-talk switch button housing shall be positioned so as to permit left-hand operation. The switch button housing shall be similar to that shown in Figure 1. The button shall be flush mounted with its housing and shall have a throw of no less than 0.25 inches to actuate the switch. High tension springs shall be provided within the switch button housing so that a deliberate force greater than normal

holding is required to actuate the switch. The switch button housing shall be of either aluminum or high-impact plastic treated to be the same color as the transceiver cabinet or darker. A waterproof seal, which shall not be visible, shall be incorporated in the switch button housing to prevent entry of water into the transceiver.

10.4.4 Two-Frequency Switch

A two-frequency switch shall be provided in accordance with specifications contained in Section 10.1.8 and 10.10.9.

10.4.5 Internal Controls and Adjustments

All other controls and adjustments shall be internal

10.5 CONNECTORS

10.5.1 External Power Cable Receptacle

The external cable receptacle shall be a male RCA phono plug recess-mounted under a black snap-type waterproof cover (Jan Hardware J-1304 or equal) located on the top panel. It shall be compatible with the OPS/CT-2A cable assembly specified in Section 10.10.5.

10.5.2 Antenna Connector

The antenna connector shall be an SO-239 type UHF female coaxial receptacle located on the top panel of the transceiver and shall accept a PL-259 type UHF male coaxial plug. The connector shall be attached by either a "D" slot or hexagonal lock nuts on each side of the top panel. A threaded cap, attached to the top panel by a chain (in a plastic sleeve) shall be provided to cover the antenna connector. The cap will screw onto a threaded stud (which shall be provided on the top panel) when the antenna connector is in use. The stud shall be no higher than 0.5 inches and be so constructed that a PL-259 coaxial connector cannot be accidently threaded on to the stud.

10.5.3 Earphone Jack

A miniature earphone jack Switchcraft (Tini-Jax) 42A, or equal protected by a black snap-type waterproof cover (Jan Hardware J-1304

or equal), shall be located on the top panel. Insertion of the ear phone plug shall disconnect the microphone/speaker, except the latter shall still act as the microphone when activated by the push-to-talk switch. The earphone jack shall be compatible with the HS-1 earphone plug specified in Section 10.10.4.

10.5.4 Metering Socket

A. A convenient miniature chassis-mounted 14 pin connector receptacle with pin holes 13 and 10 blocked (Elco Co. 05-0423-51, 05-0423-02, or equal), shall be provided internally. Connections to the above receptacle shall permit metering of the following, utilizing a test set with 0-50 uA meter.

Pin Hole No.	Function	Pin Hole No.	Function
1.	Rcvr IF	8.	Battery
2.	Xmtr 2nd Tripler current	9.	Rcvr Audio
3.	Xmtr Doubler current	10.	N.C.
4.	Rcvr Discriminator	11.	GND
5.	Rcvr Limiter output	12.	Trans Audio Input
6.	Xmtr Driver input	13.	N.C.
7.	Rcvr Osc	14.	Trans Control

B. Squelch voltage for repeater operation (section 10.10.7) shall be provided at a single miniature pin jack (Alden "Sub Mini-Test Jack" part no. 110SMI, or equal) and shall be mounted next to the metering socket.

10.5.5 Printed Circuit Board Connector

The printed circuit board shall be easily removed from the cabinet by use of a single multi-contact micro-miniature connector. Connector shall have a snap latch engagement locking device molded into connector body. Trapezoidal mating faces shall be used for polarization. (Amphenol 223 series or equal). A compatible connector shall be mounted to the transceiver chassis.

10.6 PROTECTIVE DEVICES

10.6.1 Polarity Protection

A. The transceiver shall be mechanically protected against operator error in inserting batteries with reverse polarity. In addition a diode shall electrically protect the FM-1B circuitry and be of sufficient rating so the diode will not be damaged in the event of internal battery insertion error.

B. The external power input circuitry shall include a low-loss diode to protect transceiver from damage in the event the external power source has been connected with the wrong polarity. The fuse should not blow when the wrong polarity is applied.

10.6.2 Fuses

An easily-replaceable fuse shall be mounted internally. A spare fuse of the same type shall be provided in a clip internal to the transceiver.

10.6.3 Transmitter Protection

Provision shall be made to insure that the transmitter is not rendered inoperable if the transmitter is keyed for a minimum period of 30 seconds, (a) without an antenna attached to the antenna connector or, (b) with the antenna terminals shorted.

10.6.4 Receiver Protection

The first RF amplifier stage of the receiver shall be protected against damage resulting from a high level of RF by the use of a protective diode.

10.7 DESIGN AND CONSTRUCTION DETAILS

10.7.1 Cabinet

A. The OPS/FM-1B cabinet shall be physically the same and interchangeable with the OPS/FM-1A cabinet. The cabinet, excluding the top panel and bottom plate which houses the transceiver and batteries shall be constructed of a seamless aluminum extrusion. The

corners of the cabinet shall be rounded and ribbed to provide a suitable hand grip. (See figure 1 and 2).

B. Holes shall be cut through the front, back and right side of the cabinet. The holes on the right side are for the push-to-talk switch button housing. One large hole for the microphone/speaker mouthpiece shall be on the front surface near the top of the cabinet. Holes may be used to mount the mouthpiece. Three (3) holes will be drilled in the back of the cabinet, near the top and the bottom, two of which will be filled with snap studs compatible with the OPS/CC-1 shoulder carrying strap specified in Section 10.9.1, the other hole will be for rivet attaching the hand strap. One hole shall be provided in the back of the cabinet for chassis lock. One hole shall be cut in top panel for two frequency switch; when single frequency unit is specified this hole shall have inserted a minimum of a 0.25 inch stud secured by a washer and nut to form a waterproof seal.

C. A hand strap shall be of cotton warp textile webbing, black dyed, fungus-proofed and no less than 0.125 inches thick and 1.5 inches wide. To prevent tearing of the hand strap webbing, the strap ends shall be clamped into metal brackets a nominal 0.875 inches long and swivel mounted. The unclamped portion of the hand strap shall be a nominal 6 inches in length. The bottom strap bracket shall be riveted to the cabinet. The top strap bracket shall be riveted to the cabinet with the shoulder strap snap stud. Both the rivet and stud shall have a head diameter no less than 0.562 inches. The distance between the centers of the rivet and stud shall be a nominal 6 inches.

10.7.2 Chassis

A. The body of the aluminum transceiver chassis shall employ a threaded steel insert to accept the bottom end plate screw.

B. The top panel shall be attached to the transceiver chassis. For servicing, the chassis and top panel assembly shall be easily removed from the cabinet by a single fastener.

C. The transceiver chassis shall employ a minimum of three (3) mounting posts having tapped screw holes and properly positioned to ensure that the printed circuit board assembly is securely held.

D. The battery compartment of the transceiver chassis shall be so designed that the batteries cannot roll out of the compartment when the transceiver chassis is removed from the cabinet, and the bottom plate attached.

E. The bottom of the transceiver chassis flange shall be provided with a rubber gasket seal to inhibit entry of water into the circuit board compartment when the bottom plate is removed.

F. The transceiver chassis shall be used to engage slots in cabinet extrusion. Printed circuit board is not to be used for this purpose and sufficient clearance between the printed circuit board with the cabinet interior shall be maintained.

10.7.3 Top and Bottom Plates

A. The top and bottom plates shall be so designed that they will overlap the cabinet. A celluar rubber gasket shall be provided for the top and bottom plates to ensure a waterproof fit. (See figure 2)

B. One captive steel screw shall hold the bottom plate in place. Counterbore for the bottom plate retaining screw shall be no less than 0.75 inches. The screw shall mount flush with the exterior surface of the bottom plate and have a head diameter of no less than 0.625 inches. The screw slot shall be sufficiently wide to permit removal of the bottom plate by a coin. Bottom plate shall have two (2) rivet holes in addition to above screw hole to mount battery·contact strip. Rivets shall be flush with the exterior surface.

10.7.4 External Finish

A. All surfaces of the FM-1B cabinet are to be iridited and the outside surface of the transceiver cabinet, top panel and bottom plate shall be painted gray with a semi-gloss epoxy paint. (Painted cabinet samples shall be submitted for approval).

B. The following finishes shall be provided on all metal parts of cabinet fittings, cable assemblies and accessory items.

1. Stainless steel - dull black oxide
2. Brass - black nickel plated (Minimum of .0002 inches thick) or plated black oxide.
3. Aluminum - black anodize
4. Cold rolled steel - black zinc or black cadmium plated (Minimum of .0002 inches thick)
5. Stainless steel rivets - dull black nitrate (per MIL specification C13924A, class II).

C. Processes other than that listed above are subject to approval by the Government.

10.7.5 Microphone/Speaker and Mouthpiece

A. The microphone/speaker shall be a single unit mounted behind a mouthpiece and grille on the transceiver front panel. The microphone/speaker shall be capable of providing adequately intelligible transceiver modulation while the operator is speaking in a normal conversational voice level. Operating as a speaker, it shall provide good communications quality output with the volume control set at all levels including maximum.

B. The speaker shall be spring mounted so that without pressing speaker down it will not be damaged during insertion and removal of the chassis. A plastic rim to protect the speaker rim shall be provided.

C. A detachable plastic mouthpiece no greater than 0.875 inches high shall be provided over the microphone/speaker opening to reduce entry of external noise.

D. A grille and waterproof membrane shall cover the microphone/speaker opening on the front panel and shall be accessible for replacement purposes.

10.7.6 Nameplate and Labels

A. The nameplate and control labels shall be in English and when specified one of several foreign languages. Foreign language wording will be provided by the Government.

B. English language control labels shall be etched, stamped or die-cast with debossed letters on surface of top plate.

C. Foreign language wording shall be on a separate aluminum plate. Aluminum plate shall have a minimum thickness of .008 inches and be secured by a solvent acting process. Top plate must be recessed to accept foreign language aluminum plate so that it does not extend beyond the top plate surface. Foreign language plate shall be etched with light letters on a black background.

D. When two-frequency equipment is specified, an aluminum plate with a minimum thickness of .008 inches shall be secured by a solvent acting process to the top late. Top plate shall be recessed to accept the aluminum plate so that it does not extend beyond the top plate surface. Aluminum plate shall be etched with light letters on black background identifying channels 1 and 2.

E. The nameplate shall be etched with white letters on a black background. Nameplate shall be of aluminum with a minimum thickness of .012 inches and approximately 2 inches square. The nameplate markings shall be provided the successful bidder and sample shall be submitted to the Government for approval.

F. The nameplate shall be located behind the hand strap on the side of the cabinet opposite to the microphone/speaker and secured to the cabinet by a solvent activated process.

G. The serial number shall be etched or stamped on the nameplate and the transceiver chassis flange and shall be visible with the bottom plate removed.

H. Battery insertion instructions shall be silk screened to transceiver chassis flange and readable when the end plate is removed.

I. Where the frequency range is specified to be other than 148-170 MHz, see Section 10.1.6, a label stating frequency range specified shall be permanently affixed to the printed circuit board assembly. A mylar or varnished paper label is acceptable for this purpose.

J. The symbol number of each component or part shall be printed or stamped on the printed circuit board, metal chassis or coil metal containers for ease of identification, location and maintenance.

10.7.7 Construction

A. All framework, covers, chassis, panels, sub-panels, etc., shall be of aluminum or cadmium-plated steel of suitable gauge metal.

B. Consistent with mass and weight factors, all components shall be securely mounted in such a manner as to prevent malfunctioning or damage due to shock and vibration incidental to operation or rough handling in transportation. The internal wiring and electronic parts shall be firmly secured.

C. The transceiver must be subjected to and comply with Vibration and Shock Stability requirements specified in EIA Standards RS-152-A and RS-204 with the following exception:

Harmonic motion amplitude shall be .05" (total excursion of .1") between 10 and 30 Hz, and shall be .0125" (total excursion of .025") between 30 and 60 Hz.

D. Adequate heat dissipation shall be provided. Rain, insects, etc., shall be prevented from entering the unit. Natural radiation and heat sinks, etc., shall be used for heat dissipation.

E. All components shall be located, positioned, and mounted so as to allow testing and replacement with a minimum of labor.

F. The transceiver shall be fully solid state. Circuitry shall be as shown in schematic diagram figure 4 and 12, whereby switching from receive to transmit is accomplished by a reliable miniature micro-switch. Circuitry requiring push-to-talk multiple contact switches, relays or audio output transformers are not acceptable.

G. Circuitry shall permit push-to-talk operation by placing micro-switch in +12 volt lead (ungrounded lead).

H. All tunable coils and transformers shall be fully enclosed in individual metal containers for mechanical protection. The inside surface of these metal containers shall be electrically insulated.

I. Coil forms shall be of such construction that the movable core (slug) will not stick or become loose due to heat or warpage of coil forms or when equipment is subjected to Vibration and Shock tests outlined in paragraph C.

J. The coil cores (slugs) shall be of high strength so that normal alignment procedures do not damage the slugs. The physical dimensions of all slug slots shall be the same to permit usage of a single alignment tool.

K. Where more than one core (slug) permeability value is employed, both the slug and the coil metal container shall be color coded to assure proper mating of coil and slug.

10.7.8 Components

A. All components will be fungus and moisture-resistant in accordance with MIL specification E16400E and shall allow continuous operation at full power for prolonged periods of time.

B. Corrosion and fungus resistant materials shall be used in the construction of such things as switches, jacks, plugs, terminal boards, sockets and wire insulation.

C. High quality, hermetically-sealed components shall be used wherever possible. Components shall be of such a type, size and construction that will allow replacement with standard commercial parts where feasible.

D. OPS/FM-1B printed circuit board (PC-17) shall be mechanically and electrically interchangeable with the OPS/FM-1A board (see figure 4, 5 and 12). Printed circuit board shall be of fiberglass epoxy construction and equipped with a single multi-pin connector, as specified in Section 10.5.5, for all connections. The printed circuit shall be on

the side of the board opposite from the components. The other side of the board shall be provided with a ground plane.

E. All circuit board component connections shall contain eyelets for ease of soldering, maintenance and circuit reliability. Eyelets shall be hot solder dipped and squeegeed to secure eyelets to printed circuitry. Boards shall be wave soldered.

F. Circuitry shall use silicon transistors throughout.

G. Crystals shall be provided as part of original equipment.

H. All parts shall be readily accessible and the unit shall be rugged and require little or no maintenance. Equipment will not be considered acceptable which displays instability due to regeneration, feedback, vibration, or other causes that tend to make the receiver or transmitter critical in tuning or unstable in operation.

I. Lockwashers shall be used on all screws.

J. Materials, component parts, and mechanical assemblies used in construction of the equipment shall be the best quality commercially obtainable for each specific purpose. All electrolytic capacitors shall be of standard value and manufacture, conservatively rated.

K. Non-ferrous metals with the exception of antenna elements, end plate screw and female receptacle shall be employed in construction wherever possible. This includes bolts, nuts, screws, washers and metallic fasteners. Contacts between dissimilar metals in the construction of the equipment shall be avoided whenever possible. When impractical to provide an alternate for dissimilar metal joints, the adjacent surfaces will be separated by electroplating.

L. All metallic items or parts other than corrosion resisting steels, monel, aluminum and aluminum alloys, or as otherwise noted, shall be cadmium, copper, zinc, chromium, nickel, or silver plated by electroprocess, or shall be painted with suitable corrosion-resisting paints in accordance with good engineering practices. Items or parts which require forming or bending in fabrication will be coated or plated after completion of bending or forming. All paint coating will be of

uniform thickness and possessive of good adherence and of a quality such as is used in commercial practices for equipment of this type.

M. Insulating material, including protective varnishes and impregnating compounds, will not be used if susceptible to explosion from electrical sparks or subject to combustion if ignited, or which, as a result of heating, produces fumes which tend to be noxious. All such materials will be heat resistant.

N. Materials which are potentially susceptible to ignition or subject to explosion from an electrical spark or corona discharge, or from heating due to prolonged services, and from which an initial burning of the material will support combustion, will not be used.

O. Protective fungus treatment shall be applied to complete assemblies, or units of equipment such as but not limited to R.F. and I.F. coils, speaker voice coil, chokes, etc. prior to assembly.

P. Ratings of capacitors, resistors and all other components shall provide adequate safety factors in accordance with modern engineering practices for commercial radio communication equipment. All semi-conductor devices shall be operated in a manner to conform with ratings and recommendations for the intended service as specified by the manufacturer. All semi-conductor devices shall be of standard production types produced by reputable manufacturers and readily available at the time the equipment is delivered. All component parts shall equal or exceed the requirements of the Electronic Industries Association standards.

Q. To assure minimum stocking of spare parts, manufacturer shall utilize components of such physical and electrical value to permit interchangeability with that listed in Appendix II or shown in schematic diagram figure 4 and 12. Any deviation in circuitry or component selection from that listed shall be submitted to the Government for approval.

R. Whenever tolerances are not given in the specifications and the accompanying drawings, all dimensions shall be expressed within the following tolerances:

fractional system: $\pm 1/64''$
decimal system: $\pm 0.005''$

10.7.9 Maintenance

A. To facilitate maintenance, the printed circuit board shall be easily removable as one unit.

B. Alignment/tuning tool necessary to adjust the transceiver and Allen/Spline wrench to remove volume control shall be provided and clip mounted internally inside each radio set. The tuning tool shall be 3 inches long, terminated at one end with an insulated non-metallic blade which is compatible with all coil slug slots. The other end shall be terminated in a metal screwdriver type blade which will permit adjustment of coil slugs, trimmers and squelch control.

C. Receiver and transmitter alignment procedures shall be contained on a permanently affixed label which is impervious to battery acid, located on the outside of the transceiver chassis and will provide the following information:

1. Step number
2. Metering receptacle (location of all test points)
3. Tuning control (C1, L1, L2, etc.)
4. Meter reading (maximum, minimum, etc.)
5. Procedure

10.8 SUPPORTING ITEMS FOR THE OPS/FM-1B TRANSCEIVER

10.8.1 General

The items specified below are used in conjunction with, or in support of, the OPS/FM-1B transceiver. Each shall be regarded as a separate line item for ordering purposes except when otherwise specified by the Government. Prospective contractors bidding on the

OPS/FM-1B transceiver must also be prepared to produce or otherwise provide the accessories and other supporting items specified below.

10.9 NORMALLY REQUIRED ACCESSORIES

10.9.1 OPS/CC-1 Shoulder Carrying Strap

Shoulder carrying strap shall be in accordance with figure 3 and shall be cotton warp textile webbing, black dyed, fungus-proofed and no less than 0.125 inches thick and 1.5 inches wide, suitable for tropical use. The carrying strap shall be adjustable from 18 to 36 inches in length. Overall type clamps in accordance with reference drawing are to be permanently affixed to each end of the carrying strap. The clamps are to be made from spring stainless steel wire 0.105 inches in diameter. All metal parts are to be treated per specification 10.7.4B and C. The strap overall type clamps shall be compatible with the shoulder carrying strap snap studs permanently affixed to the transceiver housing and specified in Section 10.7.1C. A cotton fabric pocket to accept the OPS/AE-1 18 inch whip antenna and OPS/AE-2 coaxial connector shall be constructed of 2 inch black water-repellent duck material and shall be capable of being attached to the shoulder carrying strap using a belt-loop type webbing.

10.9.2 OPS/AE-2 Adapter-Connector (Antenna)

The OPS/AE-2 adapter-connector is a PL-259 antenna connector with a 10-32 female threaded receptacle located on top of the connector. This 10-32 female receptacle shall be compatible with the male 10-32 threaded fitting attached to the OPS/AE-1 whip antenna described in Section 10.9.3. The adapter-connector shall be treated to be non-reflective per Section 10.7.4B and C.

10.9.3 OPS/AE-1 Whip Antenna (Element)

A flexible whip-type antenna shall be constructed of rust resistant spring steel element 18 inches long and approximately .0410 inch thickness (see figure 25). The top of the steel wire element shall be shaped into a circular loop. The bottom shall be terminated into a knurled base flange having a male 10-32 threaded fitting. A steel wire

having a thickness of approximately .0410 inches shall be fixed to the base flange and coiled around steel wire element, extending from the base approximately 3.5 inches. The Whip Antenna shall be treated to be non-reflective per Section 10.7.4B and C.

10.10 OPTIONAL ACCESSORIES

10.10.1 OPS/AE-7 Transmission Line (RG-58A/U)

This transmission line shall be a 25 foot length of RG-58A/U coaxial cable terminated at each end with PL-259 connectors and UG-175/U adapters. Connectors and adapters shall be treated to be non-reflective per Section 10.7.4B and C.

10.10.2 OPS/AE-8 Transmission Line (RG-8/U)

This transmission line shall be a 50 foot length of RG-8/U coaxial cable terminated at each end with PL-259 connectors. Connectors shall be treated to be non-reflective per Section 10.7.4B and C.

10.10.3 OPS/AE-9 Coaxial Connector Union

A coaxial connector PL-258 shall be treated to be non-reflective per Section 10.7.4B and C.

10.10.4 OPS/HS-1 Headset

This headset shall be the Telex RTY-04 or equal earphone with associated ear-hook. A five (5) foot cord (Telex CMT-98 or equal) shall be connected to the earphone on one end and a tini-plug (Switchcraft No. 750 or equal) on the other end. The hood on the tini-plug shall be approximately one (1) inch long, plastic molded or metal and treated to be non-reflective per Section 10.7.4. This tini-plug shall be compatible with the earphone jack specified in Section 10.5.3.

10.10.5 OPS/CT-2A External Battery Cable

A. The external battery cable shall be suitably weatherproofed, ten (10) feet long, and shall be terminated on one end with female plug (Switchcraft ST-60 or equal) to mate with the transceiver external power cable receptacle (Section 10.5.1); the opposite end shall be

terminated with battery clips (Mueller type 24-A or equal). Clips will be marked for polarity and covered with red plastic sleeve (for positive terminal) and black plastic sleeve (for negative terminal).

B. The external battery cable shall be a rubber or neoprene covered wire of a cross sectional area to minimize the voltage drop across the cable when the radio set is in operation.

C. The external battery cable shall also permit recharging of OPS/BS-25A nickel-cadmium batteries while contained in the OPS/FM-1B from a 12.6-15.0 volts DC source.

D. A 2 ampere slow blow fuse shall be installed in the cable assembly to assure that the nickel cadmium batteries are protected from excessive charging rates under adverse conditions which would otherwise damage the batteries.

10.10.6 OPS/BS-25A Nickel-Cadmium Battery

A. The BS-25A is a six volt, nickel-cadmium battery (Gould M400593 or equal) having a minimum capacity of 2.3 ampere hours at the 5-hour discharge rate. One nickel-cadmium battery shall mechanically and electrically replace four (4) standard carbon zinc "D" cells.

B. Open circuit voltage shall not be less than 5.0 volts upon delivery of BS-25A to the Government.

C. Open circuit voltage shall be 6.75 volts after battery has been charged at a rate of 200 mA per hour for 20 hours.

10.10.7 OPS/RU-5A Back to Back One Way Repeater Kit

A. A repeater kit shall permit operation of two (2) FM-1B transceivers for one-way talkback (see figure 18 and appropriate portion of schematic diagram figure 20).

B. Repeater kit to include transfer relay, 3 minute "time out" timer and two (2) six-foot lengths of interconnecting cable harness, terminated in male connectors compatible with metering sockets specified in Section 10.5.4A and B. Connector shall be housed in a

moulded rubber or metal container no greater than 1.0 inch long. Connector pins shall be protected by a cover when not in use and cover shall be permanently attached to connector housing. Unit to be provided in weatherproof housing similar to the OPS/FM-5B cabinet specified in Section 11.7.1. Housing to be finished per Section 10.7.4.A. Current drain of transfer relay and timer shall not exceed 300 milliamperes in transmit condition. Transceivers connected to the repeater shall operate at a minimum frequency separation of 10 MHz without degradation in receiver sensitivity.

C. Repeater kit to include template and Greenleaf punch for each kit procured to enable cutting of appropriate diameter hole in FM-1B housing. When more than one kit is ordered template and Greenleaf punch shall be provided on a basis of one (1) for every five (5) kits. Hole to allow insertion of male connector compatible with metering socket (Section 10.5.4.A and B). Kit shall also include a waterproof cover plate and required hardware to seal the hole when FM-1B is not used for repeater operation.

10.10.8 OPS/OS-25 Beacon Oscillator

A. The Beacon oscillator shall modulate the RF Carrier with a square wave varying in frequency from approximately 1000 to 300 Hz (similar to that employed in the AN/URT-21 and the AN/PRC-49). The duty cycle of the square wave shall be variable to give a transmitter duty cycle of 40% ON time and 60% OFF time.

B. Beacon oscillator shall be fully encapsulated in epoxy and shall be operational from -30° C to $+60^{\circ}$ C. It shall be of such size that it is capable of being placed physically into the FM-1B transceiver. For insertion of Beacon oscillator the chassis shall be removed. The Beacon oscillator shall be connected to the FM-1B transceiver through a suitable wafer-type plug compatible with the Metering Socket specified in Section 10.5.4.A.

C. Unit shall operate as specified in paragraph A above when Beacon plug is inserted into Metering Socket. No switch shall be provided.

D. Beacon oscillator circuitry shall be as shown in schematic diagram figure 23. Any deviations in circuitry shall be submitted to the Government for approval.

10.10.9 OPS/KM-24 Two-Frequency Conversion Kit

A. This kit shall contain a miniature toggle switch for selecting the operating frequency. Toggle switch shall not extend more than 0.5 inches above the top panel and be fully enclosed by a rubber boot to provide a waterproof seal.

B. The kit shall also contain necessary interconnecting wires and field installation instructions. (Crystals are not to be provided).

10.10.10 Spare Crystals

A. Transmit crystals in accordance with specifications contained Appendix I shall be provided when specified.

B. Receive crystals in accordance with specifications contained Appendix I shall be provided when specified.

10.10.11 Spare Parts Kit

A kit shall be provided to support five (5) transceivers. This kit shall consist of all components (less crystals) selected on a basis of those most likely to fail. The cost of one kit shall not exceed the cost of one complete set. The contractor shall submit a parts list for this kit for Government approval.

10.10.12 Spare PC-17 Printed Circuit Board Assembly

A PC-17 printed circuit board assembly with all components (less crystals) shall be provided when specified. Boards shall be tested and aligned to test frequencies to ensure that boards meet all specifications.

10.10.13 OPS/TS-13A Test Stand for Printed Circuit Board

A. Test stand shall include those items necessary to permit the maintenance of the printed circuit board when it is removed from the cabinet.

B. Test stand shall include a multi-contact receptacle that will be fully compatible with the printed circuit board plug. An extension cable two (2) feet long shall be provided which will be terminated in a male plug compatible with transceiver chassis receptacle. (See section 10.5.5)

C. Test stand shall permit the rotation of printed circuit board to several positions to facilitate servicing.

10.10.14 OPS/TS-20 Test Set

A. The Test Set shall be a self-contained portable unit permitting the metering of circuits listed in Section 10.5.4A. All readings shall be made on a 50 ua meter having a color coded scale at least two (2) inches long. Meter scale shall be submitted for Government approval. The test set shall also function as a dummy load (50 ohms) and provide RF power output and field strength relative readings.

B. The Test Set shall be housed in a steel cabinet, approximately 6x4x5 inches (see figure 24), and its weight shall be less than five (5) pounds. Cabinet shall be constructed of steel a nominal 0.040 inches thick. The outside surfaces of the cabinet shall be painted gray with a semi-gloss epoxy paint. (Painted cabinet samples shall be submitted to the government for approval.)

C. One set of four (4) rubber feet (Lavelle Rubber 715 RW, or equal) shall be permanently riveted to the bottom plate of the cabinet.

D. Control labels shall be etched, stamped, or die cast. Control labels shall describe the functions of all switch positions and binding posts and identify pins 1, 11, 12, 14 of the metering socket. The nameplate shall be etched with white letters on a black background. Nameplate shall be of aluminum with a minimum thickness of .012 inches and approximately 2 inches square. The nameplate markings shall be provided to the successful bidder and samples shall be submitted to the Government for approval.

E. A SO-239 type UHF female coaxial receptacle shall be located on the top panel of the Test Set. Connector shall be attached by either a "D" slot or hexagonal lock nuts on each side of the top panel.

F. Two binding posts (H. H. Smith 1517 or equal); are to be mounted on the front panel, (red for positive terminal and black for ground terminal) for external audio input to the transmitter.

G. A four (4) foot length multi-conductor cable shall be terminated at one end with a male connector compatible with the metering socket specified in Section 10.5.4A. Connector shall be housed in a moulded rubber or metal container. The connector pins shall be protected by a cover when not in use and the cover shall be permanently attached to the connector housing. The opposite end of the cable shall be permanently attached to the test set. The cable shall enter the test set front panel through a watertight rubber grommet and an internal clamp shall be provided for strain relief.

H. To facilitate testing of several circuits simultaneously, a 14 pin female receptacle with pin holes 13 and 10 blocked shall be mounted on the front panel of the Test Set. Receptacle to be similar to that specified in Section 10.5.4A, and to be internally connected in parallel with multi-conductor cable specified in Section 10.10.14 G.

I. A sixteen (16) position metering switch shall be mounted on the front panel and labeled as follows:

POSITION 1 - OFF

Meter is disconnected from external circuitry and a short circuit placed across the meter terminals.

POSITION 2 - BAT

Battery voltage present at pin 8 of metering socket is connected to meter. Current limiting resistor is provided so that approximately 25 uA corresponds to 10 volts and 35 uA corresponds to 14 volts. Calibrated scale marking to indicate correct battery voltage shall be provided.

POSITION 3 - RCVR OSC

The receiver oscillator activity present at pin 7 of the metering socket is connected to the meter.

POSITION 4 - RCVR IF

The rectified output of the 3rd IF amplifier present at pin 1 of the metering socket is connected to the meter.

POSITION 5 - LIM

The limiter current present at pin 5 of the metering socket is connected to the meter.

POSITION 6 - DISCR

The discriminator current present at pin 4 of the metering socket is connected to the meter. The meter shall be biased using DC voltage at pin 8 of the metering socket to indicate a zero position at approximately mid scale. Discriminator zero will be referenced to Position 2 of metering switch.

POSITION 7 - Not used.

POSITION 8 - RCVR AF

The audio output of the receiver present at pin 9 of the metering socket is connected to the meter through a limiting resistor and a diode.

POSITION 9 - XMTR TRIP

The Tripler activity present at pin 2 of the metering socket is connected to the meter.

POSITION 10 - XMTR DBLR

The transmitter doubler activity present at pin 3 of the metering socket is connected to the meter.

POSITION 11 - XMTR DR

The transmitter driver activity present at pin 6 of the metering socket is connected to the meter.

POSITION 12 - PWR 20W

A relative RF power output reading is obtained by converting RF energy at SO-239 to DC. A current limiting resistor assures a half scale meter deflection for 20 watts. An RF input change of 0.25 watts shall deflect meter a minimum of 1 uA.

POSITION 13 - PWR 5W

Same as position 12 except an RF input of 5 watts shall assure a half scale meter deflection.

POSITION 14 - PWR 1.5W

Same as position 12 except an RF input of 1.5 watts shall assure a half scale meter deflection.

POSITION 15 - XMTR AF IN

The external audio input is connected to pin 12 of the metering socket through the positive binding post (red color) located on the front panel of the test set. The meter is connected to pin 12 and positive binding post through a diode.

POSITION 16 - FLD STR

The SO-239 coaxial connector located on the top panel of the test set is connected to the meter through a diode and limiting resistor. Meter switch also disconnects 50 ohm dummy load resistor from SO-239 coaxial connector.

J. The 50 ohm dummy load resistor shall be connected to the SO-239 coaxial connector in metering switch positions 1 through 15 to preclude damage to transmitter if inadvertantly keyed for prolonged periods.

K. Meter shall be shunted by suitable back-to-back diodes to preclude meter damage in the event of application of excessive current.

L. Meter shall return to original zero position in less than 1.0 second after the current is removed. No energy shall be stored at the meter terminals which could result in a residual meter deflection.

M. An OPS/TS-20 Test Set Instruction Manual shall be provided as a separate booklet, (specification Section 10.10.16 VII A does not apply) Manual shall be written in simple English language to facilitate translation by non-technical personnel. Manual shall be submitted to the Government for approval prior to printing. Manual shall include a minimum of the following:

I. Introduction
   a. Purpose of equipment
   b. General functional and physical description
   c. Descriptive Specifications

II. Operational Procedures

a. Detailed description of metering procedure for each of the 16 meter switch positions.

b. Procedures shall include operation and setting of controls on equipment being metered.

III. Metering Chart

a. Operation procedures as in paragraph II above, in simplified chart form.

b. Chart showing in one column pin numbers of Test Receptacle (see Section 10.5.4A); another column shall include corresponding Meter Switch numbers and functions.

IV. Maintenance

a. Trouble Shooting

b. Parts Replacement

c. Zeroing and calibration

d. Schematic diagram of Test Set

e. Enlarged diagram showing pin numbers of Metering Test Socket specified Section 10.5.4 A. and 10.10.14 H.

V. Maintenance Parts List

Parts list shall be provided in the same format as that specified in Section 10.10.16 VII B.

10.10.15 Circuit Diagrams for Training

Circuit diagrams of the complete transceiver shall be provided on 20" by 30" Ozalid or other similar plastic transparencies. Two types of drawings shall be provided: one shall include English language labeling of circuit symbols, nomenclature, etc. The other shall permit foreign language labeling in the field and shall not include English language labeling.

10.10.16 Instruction and Maintenance Manual

Manual to be written in simple English language to facilitate translation by non-technical personnel. Manual shall be submitted to

the Government for approval prior to printing. Manual to include a minimum of the following:

I. Introduction
   A. Purpose of Equipment
   B. Functional and Physical Description
   C. Operational Characteristics, Effective Range

II. Specifications
   A. Per OPS Standard Specifications
   B. Transistor Complement
   C. Diode and Fuse Complement
   D. Crystal Specifications (See Appendix I)

III. Installation and Alignment Procedures
   A. Installation - Portable - Antenna types and Site Selection
   B. Receiver Alignment
   C. Transmitter Alignment

IV. Operation
   A. Explanation of Controls

V. Preventive and Corrective Maintenance
   A. Theory of Operation
      1. Receiver Circuits
      2. Transmitter Circuits
      3. Modulation Circuits
      4. Control Circuits
      5. Block Diagrams of Receiver and Transmitter Circuits
   B. Corrective Maintenance
      1. Trouble Shooting
      2. Parts Replacement and Alignment
      3. Schematic Diagram of Receiver and Transmitter circuits.
      4. Printed Circuit Board Detail Drawing. Enlargement of circuitry side of board showing phantom location of components and connections to circuitry.

VI. Maintenance Parts List

A. Maintenance parts list shall be submitted in accordance with the attached format and contain all information specified therein.

VII. Operational, Installation and Maintenance

A. Instructions shall be provided for all accessory items in accordance with above specifications.

B. Maintenance Parts List (FORMAT)

Seq. No.	Ind. Ltr.	Ref. Symbol	Item Name & Description	Part No.	Fed. Stk. No.	Manufacturer	Mfr's Part No.
(1)	(2)	(3)	(4)	(5)	(6)	(7)	(8)

EXPLANATION OF FORMAT:

1. Sequence Number: This column is for sequential identification of each item, beginning with the first item on page 1 and continuing numerically through the last page of the list. Items shall be listed in top-down sequence.
2. Indenture Letter: Letters are used to identify the relation of each item to the end item, as follows:

   A B C D E

   End item
   Assembly
   Subassembly or part of B.
   Sub-subassembly or part of C.
   Etc.....

3. Reference Symbol: Enter reference symbols used in schematic diagrams and/or drawings.
4. Item Name and Description: Self-explanatory.
   Example: Capacitor, ceramic; 100 pf, 10%, 100 wv
5. Part Number: Enter contractor's part number.
6. Federal Stock Number: Enter 11 digit Federal Stock Number when known at the time of listing.
7. Manufacturer: Enter name of manufacturer (or typical manufacturer if more than one).
8. Manufacturer's Part Number: This column contains the part number of the part manufacturer.

11.0 OPS/FM-5B TRANSCEIVER

11.1 GENERAL

The OPS/FM-5B operates as a man-pack portable, mobile or fixed station, as shown in figure 6. It is a fully transistorized FM transceiver which is capable of operating on either of two (2) crystal controlled frequencies in the 148-170 MHz band. In addition to push-to-talk voice operation, accessory items shall permit the OPS/FM-5B to be adaptable to MCW, Beacon and Repeater operation. It is normally powered by an external 12 volt DC source but may operate from its internal power source containing eleven (11) "D" cells or two (2) nickel cadmium batteries.

The OPS/FM-5B consists of two (2) major assemblies referred to as: (a) the FM-5B transceiver assembly and (b) the BS-15A battery holder assembly. The cases of the two (2) major assemblies fasten together to permit man-pack or fixed station operation.

The cabinet, antenna, fitting and all associated external items shall be treated to be non-reflective and shall have no white or bright metal surface. The transceivers are to be aligned and tuned by the manufacturer. Frequencies will be provided to the successful bidder.

11.1.1 Transceiver Operating Voltage

In addition to voltages specified in Section 10.1.1 the OPS/FM-5B shall operate at voltages up to 16.3 V DC with duty cycle specified in 10.1.3.A, B and C.

11.1.2 Sources of Power

The transceiver shall operate either from a primary external power source of 12 volts DC, a self-contained emergency power source of eleven (11) carbon zinc "D" cells or two (2) BS-25A nickel cadmium batteries.

11.1.3 Duty Cycle

Same as Section 10.1.3.A, B and C.

11.1.4 Current Drain

Maximum allowable current drain at 12 volts DC:

A. Transmitting, at full rated RF output: 1.2 amperes. Transmitting at RF output in excess of 5 watts, 0.2 amperes shall be allowed for every additional 0.5 watts of RF output.

B. Receiving at full rated audio output: 80 mA

C. Standby, receiver squelched: 8 mA

11.1.5 Antenna Impedance

Same as Section 10.1.5.A and B.

11.1.6 Frequency Range

Same as Section 10.1.6

11.1.7 Crystal Requirements

Same as Section 10.1.7.A, B.

11.1.8 Two Frequency Operation

A. When two (2) frequency operation is specified, the FM-5B will be provided with the dual sets of crystals required and with a channel change over switch located on the front control panel.

B. Same as Section 10.1.8.B.

C. Same as Section 10.1.8.C.

11.1.9 Printed Circuit Board

The OPS/FM-5B shall utilize the OPS/FM-1B printed circuit board as the Receiver-Driver.

11.1.10 Size and Weight

The OPS/FM-5B dimensions shall be in complete accordance with specifications contained in Section 11.7 and figure 7. With whip antenna and batteries "D" cells in place, the FM-5B shall weigh no more than 11.5 pounds.

11.2 TRANSMITTER

11.2.1 Minimum Carrier Power Output

Minimum RF power output over the full frequency range shall be 5 watts at 12 volts DC.

11.2.2 Carrier Frequency Stability

Same as Section 10.2.2.A and B.

11.2.3 Modulation

Same as Section 10.2.3.

11.2.4 Spurious and Harmonic Radiation

All spurious radiation shall be attenuated below the maximum level of emission of the carrier in accordance with the following formula:

Spurious attenuation in dB = $43 + 10 \log_{10}$ (power output in watts)

11.2.5 FM Hum and Noise Level

Same as Section 10.2.5.A and B.

11.2.6 AM Hum and Noise Level

Same as Section 10.2.6.

11.2.7 Modulation Limiting

Same as Section 10.2.7.

11.2.8 Audio Frequency Harmonic Distortion

Same as Section 10.2.8.

11.2.9 Audio Frequency Response

Same as Section 10.2.9.

11.3 RECEIVER

11.3.1 Sensitivity

Same as Section 10.3.1.A, B and C.

11.3.2 Squelch Sensitivity

Same as Section 10.3.2.

11.3.3 Modulation Acceptance Bandwidth

Same as Section 10.3.3.

11.3.4 Adjacent Channel Selectivity

Same as Section 10.3.4.A, B, C and D.

11.3.5 Spurious and Image Response Attenuation

Same as Section 10.3.5.

11.3.6 Oscillator Stability

Same as Section 10.3.6.

11.3.7 Residual Hum and Noise Level

Same as Section 10.3.7.

11.3.8 Audio Frequency Response

Same as Section 10.3.8.

11.3.9 Audio Power Output

At least 500 mW to speaker; at least 2.5 mW into the HS-1 headset via the earphone jack.

11.3.10 Audio Distortion

Same as Section 10.3.10.

11.3.11 Undesired Radiated and Conducted Power

Undesired radiated and conducted power shall be limited to conform with FCC rules, Part 15, Subject C, 15.62, as amended.

11.4 OPERATING CONTROLS AND ADJUSTMENTS

11.4.1 ON-OFF Switch

A. An ON-OFF heavy-duty toggle switch shall be used.

B. The toggle switch shall be enclosed with a rubber boot fixed to the hexagonal locknut to provide a waterproof seal.

C. This switch shall be located on the front panel and extend no more than 0.93 inches from the surface of the front panel.

11.4.2 Squelch Control

A heavy-duty potentiometer shall be screwdriver (alignment tool) adjustable and located behind a hinged cover plate on the front panel. This control shall vary the squelch voltage in accordance with section 11.3.2.

11.4.3 Volume Control

A. A heavy-duty potentiometer shall be located on the front panel. The volume control shall be designed for a logarithmic taper. At minimum setting, fully counter clockwise, a nominal 10 mW audible signal should be heard in the speaker.

B. A durable, black, cylindrical metal knob with an Allen type set screw shall be used. Knob to be no less than 0.625 inches in diameter.

C. The volume control shall be provided with a waterproof seal to prevent entry of water into the transceiver.

11.4.4 Two Frequency Switch

A. A two frequency switch shall be provided in accordance with all specifications contained in Section 11.1.8.A, B and C.

B. Two frequency switch to be in accordance with Section 11.4.1.A, B and C.

C. When single frequency unit is specified, the hole in the front panel used for the two frequency switch shall be sealed and waterproofed. A screw and nut arrangement providing a waterproof seal shall be used.

11.4.5 Microphone

A. The microphone shall be a rugged, controlled magnetic type, hand-held with a push-to-talk feature located on the front panel. Microphone shall be a Shure 14AX4 or the electrical and mechanical equivalent. Microphone shall have gray or black non-reflective finish. Microphone is to be provided unlabeled.

B. The microphone bracket shall be a heavy duty rigid metal frame with a spring type lock, Shure 94A242-5 or equal. Bracket shall be attached, with a rivet at top and bottom, to the hinged cover plate. The top rivet to have a .0625 inch metal spacer between the face of the hinged cover plate and the bracket.

C. The microphone cable shall enter the right side of the front panel and be permanently attached to the transceiver chassis. Cable shall be rugged, waterproof and coiled type, three (3) feet long and shall have a rubber or neoprene cover. Cable shall be provided with internal clamps for a strain relief. A watertight rubber grommet shall be provided on the feed-through hole.

11.4.6 RF Power Amplifier Adjustments

Power amplifier adjustments shall be grouped and located on the front panel behind the hinged cover plate. These adjustments shall be such that the Alignment tool specified in Section 10.7.9.B is fully compatible.

11.4.7 Internal Controls and Adjustments

All other controls and adjustments shall be internal.

11.5 CONNECTORS AND CABLE ASSEMBLIES

11.5.1 Primary Power Input Cable Assembly

The primary power input cable assembly shall be provided and consist of an eight (8) foot long weatherproof cable terminated at one end with a 2 pin keyed female polarized connector, (Amphenol 80-865 or equal) compatible with the power input male receptacle on the front panel of the OPS/FM-5B. The back end of the connector shall be threaded and

accept a type AN3057-3 cable clamp. The opposite end of the power cable shall be terminated with battery clips, (Mueller type 24-A or equal). Clips will be marked for polarity and covered with red plastic sleeve (for positive terminal) and black plastic sleeve (for negative terminal). Power cable shall be UL type SV 18/2 300 V with rubber or neoprene insulation.

11.5.2 BS-15A Power Output Cable Assembly

The BS-15A power output cable assembly shall consist of an 18-inch long weatherproof cable terminated in a two pin keyed female connector polarized the same as that specified in Section 11.5.1. The opposite end of the cable shall be permanently attached to the BS-15A battery retainer chassis. The cable shall enter the battery retainer chassis through a watertight rubber grommet and an internal clamp shall be provided for strain relief. The cable shall be UL type SV 18/2 300 V with rubber or neoprene insulation.

11.5.3 Power Input Receptacle

The power input receptacle shall be a 2-pin keyed male polarized receptacle, Amphenol 80-864 or equal and located at the bottom edge of the front panel. The power input receptacle pin connected to the positive lead (ungrounded) shall be located on the right side of the receptacle with the pins in their uppermost positions.

11.5.4 Antenna Connector

This antenna connector shall be an SO-239 type UHF female coaxial receptacle located on the upper edge of the front panel. Connector shall be attached by either a "D" slot or hexagonal locknuts on both sides of front panel to prevent any rotation. Connector shall extend a sufficient distance from the front panel to facilitate insertion of 90° coaxial connector with antenna and assure sufficient clearance between antenna and cabinet edge.

11.5.5 Earphone Jack

A miniature earphone jack, Switchcraft (tini-jax) 42A or equal, protected by a black snap-type waterproof cover, Switchcraft 615 or equal, shall be located on the front panel. Insertion of the earphone plug shall disconnect the speaker.

11.5.6 Metering Socket

Same as Section 10.5.4.A and B - except that an additional metering socket and miniature pin jack shall be located on the front panel behind the hinged cover plate. One extension cable shall be provided containing sufficient wires to permit extension of metering socket and pin jack. Wires laced together for this purpose are not acceptable. Cable shall be terminated on end going to printed circuit board with male plugs compatible with female receptacles specified in Section 10.5.4.A and B. Metering socket plug shall be potted and contained in a metal shield for mechanical and electrical protection and to facilitate removal and insertion.

11.5.7 Printed Circuit Board Connector

Same as Section 10.5.5.

11.6 PROTECTIVE AND INDICATING DEVICES

11.6.1 Polarity Protection

A. The BS-15A Battery Holder Assembly of the OPS/FM-5B shall be mechanically protected against operator error in inserting batteries with reverse polarity.

B. The transceiver shall be mechanically protected from reverse polarity inputs by the power input receptacle specified in Section 11.5.3. The external power input circuitry shall include low loss diodes to protect transceiver from damage in the event the external power source has been connected with the wrong polarity. One diode shall be in the receiver power line (after the relay) and one diode shall be in series with the relay coil.

11.6.2 Fuses

A. A fuse no less than 1.5 A and no larger than 2.0 A shall be located on the front panel behind the hinged cover plate. Fuse and fuse holder shall be Bussman 3AG extractor post mount type or equal. Fuse shall prevent damage to the transceiver.

B. Two spare fuses are to be supplied and clip mounted to the removable cover plate in the BS-15A battery holder assembly.

11.6.3 Transmitter Protection

Same as Section 10.6.3.

11.6.4 Receiver Protection

Same as Section 10.6.4.

11.6.5 Battery Condition Indicator

A. An edge type meter no larger than 1.5 inches wide and 1.25 inches high, (Electro Mechanical Components type 122D20, 123D20, or equal) shall be located on the front panel. Meter face will be in red and green colors.

B. The meter needle shall continuously indicate power source input voltage condition when ON-OFF switch (Section 11.4.1A) is in the ON position. The meter needle shall read in the green area of the scale when the input voltage is above 11 volts and fall in the red area of the scale when input voltage falls below 11 volts.

C. The meter shall be mounted so that the lip of the meter extends over the front panel cut-out. A rubber gasket shall be placed between the surface of the front panel and the back side of the meter lip to provide a waterproof seal.

11.6.6 R. F. Output Indicator

A. A visual type of R.F. output indicator shall be located on the front panel. The indicator light, when illuminated, indicates that the transmitter is operating and delivering R.F. power to the antenna.

Indicator lamp shall be so designed that a minimum of R.F. power is required to provide a noticeable illumination in a lighted room.

B. R.F. output indicator holder shall be provided with a waterproof seal.

11.7 DESIGN AND CONSTRUCTION DETAILS

11.7.1 Cabinet

A. The FM-5B transceiver assembly shall be housed in a single drawn aluminum cabinet, Zero Company or equal, 4x5.125x10.5 inches having rounded edges and corners and constructed of an aluminum alloy a nominal 0.063 inches thick. Cabinet construction shall be in strict accordance with dimensions given above and in figure 7.

B. The BS-15A battery holder assembly shown in figure 9 is contained in a cabinet similar to that above and so designed that it will enter this cabinet which will act as a cover. The transceiver cabinet and battery holder cabinet shall form a waterproof seal when clamped together.

C. The only holes permitted are those to rivet cabinet catches, strikers, rubber feet, battery retainers and carrying handle mounts. No other holes, ventilation louvers, electrical connectors or adjustment controls of any nature whatsoever are to be located on any part of the external cabinet or cover. All controls and connections will be located only on the transceiver front panel. No mounting screws to be used other than those on the front panel.

D. Two collapsible handles shall be black in color and constructed of either leather or Polyvinyl Chloride Compound (Philadelphia Handle Co. B 915 or equal). One handle shall be located on the top center and the other on the rear center of the transceiver cabinet. Handles are to be designed to provide at least six inches between supports and be permanently attached to the transceiver cabinet. (See figure 8).

E. Cabinet and cover shall have three (3) sets of four (4) rubber feet (bumpers) (Lavelle Rubber 715 RW or equal) permanently riveted to cabinet and cover as shown in figure 6.

F. Cabinet catches and strikers (Nielsen Hardware Corp. or equal) shall be provided as shown in figures 7 and 10. The swing catch attaching rivet shall have a head diameter of no less than 0.562 inches.

G. Adequate space and brackets shall be available between the transceiver front panel and the inside of the BS-15A battery cover to accommodate the microphone, cable, fuses (per Section 11.6.2.B), flexible antenna, connectors (per Section 10.9.2 and 11.9.4), and power cables (per Section 11.5.1 and 11.5.2).

H. A rubber or neoprene gasket shall be provided in the cover to form a splashproof seal when the BS-15A battery cover plate is inserted and compressed. To remove the battery cover plate two (2) Dzeus type captive butterfly fasteners capable of being turned by hand shall be provided.

I. BS-15A battery assembly shall be constructed as shown in figure 9. It will accept either eleven (11) "D" cells or two (2) nicad batteries OPS/BS-25A (Section 10.10.6). When the nicad batteries are used, the OPS/AU-25 fuse holder is installed in the compartment normally containing three (3) "D" cells.

11.7.2 Chassis

Transceiver chassis shall be permanently attached to the front panel and entire assembly shall be removable from cabinet by means of Dzeus captive fasteners AJ3-50 or equal.

11.7.3 Front Panel

A. Front panel shall be provided with a waterproof seal. Seal shall be an "O" ring or cellular neoprene gasket set in the mounting flange on the transceiver housing. A minimum of four captive Dzeus type fasteners shall be used to assure a waterproof seal when front panel is in place.

B. The hinged cover plate, no less than 2x2-1/2 inches, shall be separately fabricated from the front panel and attached to the face of the front panel by a heavy duty hinge, riveted to both cover plate and front panel. The hinge shall be spring loaded so that the cover plate is

normally in an open position. The cover plate shall be provided with a waterproof gasket. One captive Dzeus type butterfly fastener shall be used to assure a waterproof seal when cover plate is in place.

C. An arrangement shall be incorporated whereby any sub-assembly units such as R.F. amplifier and all controls, are fixed to the front panel.

11.7.4. External Finish

A. All surfaces of the FM-5B and BS-15A are to be iridited and the outside surfaces of the transceiver cabinet, cover and front panel, shall be painted gray with semi-gloss epoxy paint (Painted cabinet samples shall be submitted for approval).

B. Same as 10.7.4.B.

C. Same as 10.7.4.C.

11.7.5 Speaker

A. The speaker shall be no less than 2-1/2 inches and mounted behind a metal grille located on the front control panel by means of three (3) Philips head screws. Speaker shall provide good communications quality output with the volume control set at all levels including maximum.

B. The speaker cone shall be moisture-proofed.

C. A waterproof membrane shall be located behind the front panel and cover the grille opening to assure a waterproof seal. This membrane shall be accessible for replacement purposes.

11.7.6 Nameplate and Labels

A. The nameplate and control labels shall be in English and when specified, in one of several foreign languages. Foreign language wording will be provided by the Government.

B. English language control labels shall be etched, stamped or die cast with debossed letters on surface of front panel.

C. Foreign language wording shall be on a separate aluminum plate. Aluminum plate shall have a minimum thickness of .008 inches and be

secured by a solvent acting process. Front panel must be recessed to accept foreign language aluminum plate so that it does not extend beyond the front panel surface. Foreign language plate shall be etched with light letters on a black background.

D. The nameplate shall be etched with white letters on a black background. Nameplate shall be of aluminum with a minimum thickness of .012 inches and approximately 1 inch wide and 2 inches long. The nameplate markings shall be provided to the successful bidder and sample shall be submitted to the Government for approval.

E. The nameplate shall be located under the speaker grille on the left side of the front panel and secured to the front panel by a solvent activated process.

F. The serial number shall be etched or stamped on the nameplate and the transceiver chassis.

G. Battery insertion instructions shall be silk screened or contained on a permanently affixed label which is impervious to battery acid. Instructions shall be located on the inside of the BS-15A battery holder assembly and be readable when the battery holder cover is removed.

H. Same as Section 10.7.6 I

I. Same as Section 10.7.6 J

11.7.7 Construction

A. Same as Section 10.7.7 A

B. Same as Section 10.7.7 B

C. Same as Section 10.7.7 C

D. Same as Section 10.7.7 D

E. Same as Section 10.7.7. E

F. The R. F. power amplifier subassembly shall be fully solid state and enclosed in a metal container for mechanical protection. Circuitry shall be as shown in schematic diagram figure 12 whereby switching from receive to transmit is accomplished by the push-to-talk button on the microphone specified section 11.4.5.A. The FM-1B

printed circuit board shall be used as the receiver-driver for the FM-5B and no connections shall be made to the FM-1B printed circuit board other than that specified in section 10.5.5 and 11.5.6. The FM-1B printed circuit board components, other than speaker, shall not be required to be disconnected or removed when board is operated in FM-5B.

G. Same as Section 10.7.7. H.

H. Same as Section 10.7.7. I.

I. Same as Section 10.7.7. J.

J. Same as Section 10.7.7. K.

K. Relay shall be an enclosed plug-in-type Potter Brumfield KHP17D11 or equal and installed in a mating female relay socket Potter Brumfield 9KH1 or equal. The relay shall be held firmly in place by a clamp fastened to the chassis and pressing against the top surface of the relay housing.

11.7.8 Components

Same as Section 10.7.8. A through R.

11.7.9 Maintenance

A. Same as Section 10.7.9.A.

B. An Allen/Spline wrench required to remove and tighten volume control knob shall be provided and clip mounted to the BS-15A battery holder assembly cover plate. An alignment tool shall be clip mounted to the OPS/FM-5B chassis; it shall be no more than four (4) inches long, terminated at one end with an insulated non-metallic blade which is compatible with all coil slug slots. The other end shall be terminated in a metal screwdriver type blade which will permit adjustment of coil slugs, trimmers and squelch control.

C. Receiver and transmitter alignment procedures shall be contained on a label permanently affixed to the inside of the transceiver cabinet and will contain the following information:

1. Step no.
2. Metering receptacle (location of all test points)
3. Tuning control (C1, L1, L2, etc)

4. Meter reading (maximum, minimum, etc.)
5. Procedure

11.8 SUPPORTING ITEMS FOR THE OPS/FM-5B TRANSCEIVER

The items specified below are used in conjunction with, or in support of, the OPS/FM-5B transceiver. Each shall be regarded as a separate line item for ordering purposes except when otherwise specified by the Government. Prospective contractors bidding on the OPS/FM-5B transceiver must also be prepared to produce, or otherwise provide, the accessories and other supporting items specified below.

11.9 NORMALLY REQUIRED ACCESSORIES

11.9.1 OPS/CC-16 Carrying Case

A. This case shall be a back-pack type permitting the OPS/FM-5B to be used as a portable transceiver in support of field operations. The case shall be designed to ride high on the bearer's back and easily unstrapped. It shall be made of heavy canvas no. 8 cotton duck, black dyed and fungus-proofed. The pack shall be divided into four (4) compartments; one to hold the FM-5B transceiver and the BS-15A battery holder assembly in the man-pack configuration; one to hold the transceiver accessories (antenna, etc.) and two in the shape of side pockets approximately 4x10 inches. The middle pocket should be approximately 11x11x4-1/2 inches. The case side near the bearer's back and the compartment partitions shall be padded. The padding shall not be sponge and shall be material which does not absorb moisture.

B. All compartments shall have flap-type covers and heavy-duty snap-type fasteners. The transceiver compartment flap cover shall provide an opening for the whip antenna element and when closed flap shall have a minimum of a one inch overlap. Flap shall be secured by a minimum of four (4) heavy-duty snap-type fasteners.

C. The back-pack straps shall be cotton warp textile webbing black dyed, fungus-proofed, two (2) inches wide and contain belt loop type pads in the vicinity of the shoulders. One belt loop type pad shall have a microphone bracket Shure 94A242-5 or equal. The back-pack

straps may be as small as one (1) inch in areas which do not come in contact with bearer's shoulders.

11.9.2 OPS/AE-2 Adapter-Connector

Same as Section 10.9.2.

11.9.3 OPS/AE-1 Whip Antenna

Same as Section 10.9.3.

11.9.4 OPS/AE-3 90° Coaxial Connector

A 90° coaxial "L" type connector, UG-646/U or equal shall be provided and treated to be non-reflective, per Section 10.7.4.B and C.

11.10 OPTIONAL ACCESSORIES

11.10.1 OPS/AE-7 Transmission Line (RG58A/U)

Same as Section 10.10.1.

11.10.2 OPS/AE-8 Transmission Line (RG-8/U)

Same as Section 10.10.2.

11.10.3 OPS/AE-9 Coaxial Connector Union

Same as Section 10.10.3.

11.10.4 OPS/HS-1 Headset

Same as Section 10.10.4.

11.10.5 OPS/AU-25 Fuse Holder for BS-15A

An easily replaceable 3A fuse shall be mounted in a enclosed metal container. This unit shall mechanically replace three (3) standard carbon zinc "D" cells. When this unit is inserted in the BS-15A battery holder assembly, it shall be electrically in series with and protect the BS-25A nickel cadmium batteries from damage.

A label which is impervious to battery acid shall be permanently affixed to the fuse holder and shall be readable when the BS-15A battery holder assembly cover plate is removed.

11.10.6 OPS/BS-25A Nickel-Cadmium Battery

Same as Section 10.10.6.

11.10.7 OPS/RU-6A Back-to-Back Two-Way Repeater Kit

A. The OPS/RU-6A Back-to-Back Two Way Repeater is designed to be used with two OPS/FM-5B transceivers. The entire repeater system, consisting of the RU-6A and two FM-5B transceivers with their associated power supplies, shall provide communications between two stations operating on different frequencies. (See figure 10.)

B. The RU-6A back to back two way repeater consists of two identical transfer relay circuits interlocked in such a manner as to allow only one transceiver in the system to transmit at any one time. Each transfer relay circuit has a three minute timer, which is actuated instantly when either of the FM-5B transceivers receives a signal. It switches off the transmitting FM-5B after a three-minute interval.

C. Circuitry shall follow schematic diagram figure 20. Any deviations shall be submitted to the Government for approval.

D. Same as Section 10.10.7.B.

11.10.8 OPS/OS-25 Beacon Oscillator

A. Same as Section 10.10.8.A.

B. Same as Section 10.10.8.B except that unit shall fit into space between chassis and hinged cover plate on front panel of FM-5B.

C. Same as Section 10.10.8.C.

D. Same as Section 10. 10.8.D.

11.10.9 OPS/KM-25 Two Frequency Conversion Kit

A. This kit shall contain a heavy duty toggle switch in accordance with Section 11.4.1.A, B and C.

B. The kit shall also contain interconnecting wires and field installation instructions. (Crystals are not to be provided).

11.10.10 Spare Crystals

Same as Section 10.10.10.A and B.

11.10.11 Spart Parts Kit

Same as Section 10.10.11.

11.10.12 Spare PC-17 Printed Circuit Board Assembly

Same as Section 10.10.12.

11.10.13 OPS/TS-13A Test Stand for Printed Circuit Board

Same as Section 10.10.13.A, B and C.

11.10.14 OPS/TS - 20 Test Set

Same as Section 10.10.14.A through M.

11.10.15 Circuit Diagrams for Training

Same as Section 10.10.15.

11.10.16 Instruction and Maintenance Manual

Same as Section 10.10.16 I through VII.

11.10.17 OPS/AE-4 Ground Plane Antenna

A. The AE-4 ground plane antenna shall be an omnidirectional unity gain antenna and conform to the following electrical specifications:

1. Frequency range 146-172 MHz
2. Input impedance 50 ohms
3. Maximum VSWR 2:1 over frequency range 150-165 MHz.
4. Power handling capacity 25 watts average, 50 watts PEP

B. Ground Plane Antenna shall be constructed in accordance with figure 25. Antenna base shall be aluminum and weigh a maximum of one (1) pound. The antenna base shall have 10-32 threaded female

steel inserts and be so designed that when four (4) OPS/AE-1 whip antenna elements are inserted they form a ground plane antenna.

C. Four (4) each AE-1 whip antenna elements specified in Section 10.9.3 shall be provided with each ground plane antenna base.

D. Antenna base shall be equipped with "U" type sawtoothed clamps permitting antenna to be mounted to either metal poles or tree limbs having a diameter of 0.5 to 2.5 inches. Clamps shall be provided with two (2) threaded bolts and compatible hex and wing nuts.

E. A female coaxial receptacle type SO-239 shall be located on the bottom side of the antenna base and be electrically connected to the driven element receptacle.

F. Antenna shall be provided with lightning protection.

G. All hardware such as nuts, bolts, clamps, washers, etc., are to be non-ferrous. Antenna base, clamp and all hardware shall be treated to be non-reflective in accordance with Section 10.7.4.B and C.

11.10.18 OPS/AE-10 Tactical High Gain Antenna

A. The AE-10 tactical high gain antenna shall be an omni-directional 5/8 wavelength type antenna and conform to the following electrical specifications:

1. Frequency range 146-172 MHz
2. Gain 3 db over dipole
3. Input impedance 50 ohms
4. Maximum VSWR 2:1
5. Power handling capacity 25 watts average, 50 watts PEP

B. Antenna shall be constructed in accordance with figure 26 and be compatible with the following mounts:

1. The driven element receptacle on the OPS/AE-4 ground plane antenna base specified in Section 11.10.17.B.
2. The driven element receptacle on the OPS/AE-6 magnetic antenna mount specified in Section 11.10.20.B.

3. The OPS/AE-2 adapter-connector specified in Section 10.9.2.

C. The spring and loading coil shall be removable as one unit and the antenna collapsible so that it can be conveniently carried in the OPS/CC-16 carrying case specified in Section 11.9.1.A.

D. Frequency markings to facilitate adjustment of antenna shall be stamped or etched on the telescopic section.

E. Antenna to be constructed of aluminum tubing and treated to be non-reflective, per Section 10.7.4.B and C. Sliding contacts must assure good electrical connections.

F. The AE-1 whip antenna element used for the top section of the tactical antenna shall not be provided.

11.10.19 OPS/AE-13 Tactical Log Periodic Antenna

A. The AE-13 tactical log periodic antenna shall be a unidirectional high gain antenna and conform to the following electrical specifications:

1. Frequency range 150-172 MHz
2. Forward gain over dipole 6 db minimum
3. Front to back ratio 10 db minimum
4. Input impendance 50 ohms
5. Maximum VSWR 2:1
6. Polarization horizontal
7. Power handling capacity 25 watts average, 50 watts PEP

B. Antenna shall be so designed that each element folds into the cross arm for portability. (See figure 27). Canvas straps shall be riveted to the cross arm to hold the antenna elements in place when the elements are in a collapsed position for storage. Antenna shall conform to specifications contained in Section 11.10.17.D, F. and G.

C. A female coaxial receptacle type SO-239 shall be located as shown in figure 27.

D. OPS/CC-25 carrying case shall be provided with each tactical log periodic antenna. Carrying case shall be fabricated as follows:

1. Carrying case shall be approximately 30x4.5 inches.

2. Case shall be of a heavy duty canvas duty material black in color.

3. A heavy duty snap type fastener shall be attached to the flap type cover. Flap shall overlap the case a minimum of two (2) inches with antenna inserted.

4. A spring steel, pressure fit clasp shall be used to attach the CC-25 carrying case specified in section 11.9.1.A. The straight side of the clasp shall be sewn into the back, upper part of the CC-25 carrying case. The curved side of the clasp shall slide into one of the two side accessory compartments of the CC-16 carrying case. The clasp shall extend into the CC-16 carrying case compartment far enough to prevent accidental disengagement.

11.10.20 OPS/AE-6 Magnetic Vehicle Antenna Mounting Bracket

A. The AE-6 vehicle antenna mounting bracket shall be so designed that it can be magnetically attached to any ferrous metal part of the vehicle body.

B. The AE-6 mount shall have a 10-32 threaded female receptacle compatible with the OPS/AE-1 whip antenna element specified in Section 10.9.3.

C. With the AE-1 whip antenna element inserted, the AE-6 mount shall remain on vehicle body at speeds in excess of 60 miles per hour.

D. Ten (10) feet of RG58A/U cable shall be provided. One end of the cable shall be permanently attached to the AE-6 mount; the other end shall be terminated in a PL-259 male coaxial connector.

E. The AE-6 mount shall be treated to be non-reflective in accordance with Section 10.7.4.B and C.

F. The OPS/AE-1 whip antenna element shall not be provided.

11.10.21 OPS/AE-5 Gutter Mounting Bracket for Mobile Antenna

A. The AE-5 vehicle antenna mounting bracket shall be so designed that it can clamp to a jeep top or vehicle rain gutter.

B. The AE-5 mount shall have a 10-32 threaded female receptacle compatible with the OPS/AE-1 whip antenna element.

C. Six (6) feet of RG58A/U cable shall be provided. One end of the cable shall be permanently attached to the AE-5 mount, the other end shall be terminated in a PL-259 male coaxial connector.

D. The AE-5 mount shall be treated to be non-reflective in accordance with Section 10.7.4.B and C.

E. The OPS/AE-1 whip antenna element shall not be provided.

11.10.22 OPS/KA-8A Telegraph (MCW) Assembly

A. The KA-8A telegraph assembly shall permit MCW operation of the OPS/FM-5B (see figure 21).

B. The KA-8A shall employ a fully transistorized tone oscillator. Tone oscillator shall provide sufficient output to drive an HS-1 headset (Section 10.10.4) as well as modulate the carrier of the FM-5B. Tone oscillator shall provide a stable audio frequency of approximately 1000 Hz. The current drain of the tone oscillator shall not exceed 20 mA when actuated.

C. A double pole, double throw telephone lever type switch (Switchcraft 292061 modified or equal) shall, in transmit position, turn on the carrier of the FM-5B and transfer the HS-1 headset to monitor the tone oscillator audio output. In receive position, the switch deactivates the FM-5B transmitter and transfers the HS-1 to the FM-5B receiver audio output. The receiver audio is controlled by the FM-5B volume control.

D. A miniature heavy duty volume control shall be provided to adjust the tone oscillator audio output to the HS-1 during the transmit mode.

E. A basic telegraph key, J-37 or equal, with oval moulding shall be mounted on the top of the KA-8A assembly housing. J-37 key to

include two (2) silver contacts, 3-way contact adjustments, and two (2) binding post terminals.

F. The interconnecting cable from the KA-8A to the FM-5B shall provide for tone audio input, receiver audio output, 12 volts DC and transmitter control. It shall be four (4) feet long, weatherproofed and terminated at one end with a male connector compatible with metering socket specified in section 11.5.6 and 10.5.4.A. The male connector shall be housed in a metal container no greater than 1.0 inch long. Connector pins shall be protected by a cover when not in use. Cover to be attached to connector housing. The other end of the interconnecting cable shall be permanently attached to the back side of the KA-8A. Cable shall be provided with an internal clamp for strain relief and a watertight rubber grommet for the feed through hole.

G. A miniature earphone plug compatible with the FM-5B earphone jack specified in Section 11.5.5 shall be provided. Earphone plug to be permanently attached to KA-8A interconnecting cable by means of plastic covered chain. Earphone plug, when inserted in FM-5B earphone jack, mutes the speaker. (It shall not provide receiver audio to the KA-8A).

H. A female miniature phone jack (Switchcraft 42A or equal) shall be located on the right side of the KA-8A and shall permit monitoring of either the tone oscillator or the receiver audio.

I. The KA-8A telegraph assembly housing shall be approximately 3"x6"x0.5" large and be constructed of aluminum no less than .040" thick. A bottom plate shall be provided which can easily be removed for servicing. Housing and hardware shall be treated to be non-reflective in accordance with Section 10.7.4.B and C. Specification 10.7.8.R also applies.

J. Circuitry shall follow schematic diagram figure 22. Any deviations in circuitry shall be submitted to the Government for approval.

11.10.23 OPS/KM-13 Vehicle Noise Reduction Kit

A kit shall be provided to reduce the noise generated by the vehicle electrical system. The KM-13 vehicle noise reduction kit shall include the following:

1. Lead and Lug assemblies.

2. Coaxial Capacitors.

3. Generator field suppressor assembly.

4. Ignition coil suppressor cable.

5. All required mounting hardware and instruction booklet.

11.10.24 OPS/PS-25 DC to DC Converter

A. The PS-25 shall be a solid state DC to DC converter and designed to provide an isolated output. It shall operate either the OPS/FM-5B or the FM-5B with a PA-20 (see section 13) in vehicles having the positive terminal of the battery grounded to the body.

B. PS-25 converter shall provide a minimum of 6A at 13.6 volts.

C. With output load of 0 to 5.2 amperes the output voltage shall be 13.6 V DC $\pm$20%, when the input voltage is 13.6 V DC $\pm$20%.

D. Converter efficiency shall not be less than 50%.

E. A fuse shall be provided in the negative input lead to the converter and be of such a rating as to protect the vehicle battery and wires from damage. Fuse shall be a 3AG post extractor type and accessible for replacement purposes.

F. Adequate heat sinks shall be provided for the switching transistors. The converter housing shall be fully enclosed and so constructed to inhibit the entry of water or dust. A flange shall be provided on the converter housing with a minimum of two 0.25 inch holes for mounting the converter to the vehicle body.

G. Power output cable shall be six (6) feet long, weatherproof, rubber or neoprene covered and terminated at one end with a 2 pin keyed female polarized connector, Amphenol 80-865 or equal. Connector shall be compatible with the power input male receptacle on the FM-5B and PA-20. The opposite end of the power output cable shall be permanently attached to the converter housing and provided with an internal clamp for strain relief and a watertight rubber grommet for the feed-through hole.

H. Power input cable shall be three (3) feet long, weatherproof, rubber or neoprene covered, and terminated at one end with battery clips (Mueller type 24-A or equal). Battery clips will be marked for polarity and covered with red plastic sleeve (for positive terminal) and black plastic sleeve (for negative terminal). The opposite end of the power input cable shall be permanently attached to the converter housing and provided with an internal clamp for strain relief and a watertight rubber grommet for the feed-through hole.

11.10.25 OPS/AU/A-1 Mobile Mounting Bracket

A mobile mounting bracket designed to hold the FM-5B transceiver under the dashboard of a vehicle shall be provided as shown in figure 11. This bracket shall have four (4) rubber bumpers on the side of vertical leg (inside face), to protect the transceiver against shock vibration. One external catch on each corner plate, as shown, shall be provided. The mobile mounting bracket shall be made of aluminum and be treated to be non-reflective, per Section 11.7.4.A, B and C. Section 10.7.8.R applies.

12.0 OPS/PS/A-16 POWER SUPPLY

12.1 General

A. The PS/A-16 specified below is used in conjunction with the OPS/FM-5B transceiver. The PS/A-16 consists of two major assemblies, (a) the power supply assembly and (b) the nicad battery holder assembly. The power supply and nicad battery assemblies shall be regarded as individual line items for ordering purposes. Prospective contractors bidding on the OPS/FM-5B transceiver must also be prepared to produce or otherwise provide the PS/A-16 power supply.

B. AC Power Supply Model OPS/PS/A-16, shown in figure 13 provides regulated DC, adjustable from 11.5 to 15.5 volts, for operation of the Model OPS/FM-5B transceiver. The PS/A-16 provides sufficient power to operate the FM-5B transceiver singly or in conjunction with the OPS/PA-20 Power Amplifier. In addition, the power supply provides power for charging a single 12-volt lead-acid battery, and one, two or three series pairs of BS-25A nickel-cadmium batteries.

C. The PS/A-16 Power Supply, see figure 15 for schematic diagram, utilizes a full-wave rectifier to convert AC into DC and an electronic voltage regulator which controls output voltage over narrow limits under varying AC line voltage and DC output load conditions.

12.2 POWER SUPPLY ASSEMBLY ELECTRICAL SPECIFICATIONS

12.2.1 Input Voltages

The power supply shall operate in accordance with all specifications contained herein with input voltages ranging from 100 to 125 or 200 to 230 volts, 50 to 60 Hz, single-phase AC.

12.2.2 Primary Output

The primary output of the power supply is supplied via an 18 inch DC power cable which connects to either the OPS/FM-5B or PA-20 RF power amplifier.

A. Output voltage - The primary output voltage shall be 13.6 volts DC, internally adjustable ±10%.

B. Regulation - Regulation shall be within ±1.5 volts DC with output currents ranging from 8 mA to 5.2A.

C. Ripple - Ripple shall be 0.05 volts RMS or less with output currents ranging from 8 mA to 5.2A.

D. Drift - Drift shall be limited to ±1.5 volts DC over a temperature range of 0° to 55° C.

E. Transients - Overall design shall be such that transients resulting from starting line surges or other causes will be suppressed so that no damage occurs to the power supply, the FM-5B or the PA-20.

12.2.3 Output for Charging Lead Acid Batteries

The output power for charging lead-acid batteries shall be available in a receptacle on the power supply front panel. This output shall be capable of supplying a minimum of 1.5A continuously to a 90% discharged 12-volt vehicular type lead-acid battery over the temperature range 0° to 55° C.

12.2.4 Output for Charging BS-25A Nickel-Cadmium Batteries

The output power for charging BS-25A nickel-cadmium batteries shall be available on a receptacle on the power supply front panel. The open-circuit output voltage shall be a minimum of 28 volts DC. This output shall be capable of supplying up to 800 mA continuously to one, two or three series pairs of BS-25A nickel-cadmium batteries under charge, over the temperature range 0° to 55° C.

12.2.5 Duty Cycle

A. The power supply shall be capable of supplying output power continuously from 8 mA to 2.38 A as follows:

1.5 A for lead-acid battery charging
.8 A for nickel-cadmium battery charging
.08 A to transceiver in receive condition
2.38 A maximum, continuous output current

B. The PS/A-16 power supply shall be capable of delivering 7.5 A without causing internal damage for a continuous five-minute period and be capable of a 20% duty cycle at 5.2 amperes.

1.5 A for lead-acid battery charging

.8 A for nickel-cadmium battery charging

1.2 A to transceiver in transmit condition

4.0 A to RF power amplifier in transmit condition

7.5 A maximum for a continuous five-minute period

12.3 POWER SUPPLY ASSEMBLY OPERATING CONTROLS, ADJUSTMENTS AND INDICATORS

12.3.1 On-Off Switch

A. An ON-OFF heavy-duty toggle-type switch shall be used.

B. The toggle switch shall be enclosed with a rubber boot fixed to the hexagonal locknut to provide a waterproof seal.

C. This switch shall be located on the front panel and extend no more than 0.93 inches from the surface of the front panel.

12.3.2 Output Voltage Control

A heavy duty potentiometer, (Ohmite CLU-1011 or equivalent) locking type with slotted shaft shall be located behind the hinged cover plate on the front panel. The control shall vary the output voltage in accordance with Section 12.2.2A.

12.3.3 Input Voltage Switch

A. A heavy-duty two-position slide switch shall be located behind the hinged cover plate on the front panel. The switch shall select power supply input voltages in accordance with specification 12.2.1.

B. A positive mechanical lock shall prevent changing the position of the switch unless the lock is removed. The mechanical lock shall be in accordance with figure 13.

12.3.4 Pilot Light

A pilot light shall be mounted behind the front panel of the power supply and shall be protected by a red lens mounted on the front panel. Pilot light shall be discernible in an illuminated room.

12.3.5 Other Adjustments

All other adjustments shall be internal.

12.4 CONNECTORS AND CABLE ASSEMBLIES

12.4.1 Primary Power Output Cable Assembly

The Primary power output cable assembly shall consist of an 18-inch long weatherproof cable terminated in a two pin keyed female connector Amphenol 80-865 or equal and compatible with the power input male receptacles on the FM-5B and PA-20. The opposite end of the cable shall be permanently attached to the power supply. The cable shall enter the front panel of the power supply through a water-tight rubber grommet, and an internal clamp shall be provided for strain relief. The cable shall be UL type SV 18/2 300 V with neoprene or rubber insulation.

12.4.2 OPS/CT-5 Universal AC Plug and Cord

A. Plug, electrical, male, to be fitted to standard American and European female receptacles by reversing the prongs of the plugs. The plug shall be constructed as shown in figure 14.

B. The molded hard rubber, semi-flexible housing shall contain two permanently fixed brass female threaded receptacles. The receptacles shall be threaded on the inside to receive the male prongs.

C. Two (2) brass male prongs with an overall length of 1.5 inches shall be designed to fit both the American and European receptacles. The center portion of the prongs is 0.3125 inches in length and shall be threaded to fit the female brass receptacle in the CT-5 housing.

D. The AC cord shall be six (6) feet long and permanently and electrically connected to the base of the threaded female receptacle.

12.4.3 Lead-Acid Battery Charging Cable Assembly

This cable shall not be provided. The power input cable specified in Section 11.5.1 shall be used for this purpose.

12.4.4 Lead-Acid Battery Charging Receptacle

A. The lead acid battery charging receptacle shall be a two pin keyed male receptacle (Amphenol 80-864 or equal) compatible with the primary power input cable assembly connector specified in Section 11.5.1. Receptacle shall be located on the front panel of the PS/A-16 and internally connected in parallel with the primary output cable specified in Section 12.4.1.

B. A threaded cap attached to the front panel by a chain (in a plastic sleeve) shall be provided to cover the receptacle. The cap is to have a rubber insert.

12.4.5 Nickel Cadmium Battery Charging Receptacle

A. The nickel cadmium battery charging receptacle shall be a 3 pin keyed male receptacle (Amphenol 91-PC3M or equal) compatible with the nickel cadmium battery holder power input cable connector specified in Section 12.6.2. Receptacle shall be located on the front panel of the PS/A-16.

B. A threaded cap, attached to the front panel by a chain (in a plastic sleeve) shall be provided to cover the receptacle. The cap is to have a rubber insert.

12.4.6 Meter Pin Jack

A miniature pin jack (Alden 110SMI or equal) shall be located behind the hinged cover plate on the front panel. This jack shall be connected to the positive side of the output voltage to facilitate accurate adjustment of the output voltage control.

12.5 PROTECTIVE DEVICES

12.5.1 Polarity Protection

A. Pin polarity of all receptacles and connectors shall be consistent.

B. A protective diode shall be connected in series with the positive lead of the lead acid receptacle to prevent damage to the PS/A-16 should external voltages be higher than that supplied by the PS/A-16.

12.5.2 Temperature Protection

A Thermal Switch (Elmwood Sensors 2455 or equal) shall be secured to the transformer core and remove the input voltage to the primary of the transformer when the temperature reaches not more than 125° C and not less than 100° C. The Thermal Switch shall reset automatically when the temperature falls below 100° C.

12.5.3 Fuses

A. The input and output circuits of the PS/A-16 shall be protected by fuses. Fuses and fuse holders (Bussman 3 AG extractor post mount type or equal) shall be located on the front panel behind the hinged cover plate. Fuses shall be slow blow type with current ratings as follows:

1. 100 V AC fuse 2 A
2. 200 V AC fuse 1 A
3. 13.6 V DC fuse 8 A

B. Spare fuses are to be supplied and clip mounted to the top side of the hinged cover plate in the nickel cadmium battery holder assembly.

12.6 NICKEL CADMIUM BATTERY HOLDER ASSEMBLY

12.6.1 Input Voltage and Charging Current

A. The input voltage shall be a minimum 28 volts DC without BS-25A batteries inserted.

B. Charging current shall be limited in each leg (2 BS-25A batteries) to 235 mA.

12.6.2 Charging Input Cable Assembly

The charging input cable assembly shall consist of an 18 inch long weatherproof cable terminated at one end with a 3 pin keyed female connector (Amphenol 91-MC3F1 or equal) compatible with receptacle specified in Section 12.4.5 A. The opposite end of the cable shall enter the cover plate of the nickel cadmium battery holder chassis and be permanently attached to the chassis. Cable shall be provided with internal clamps for strain relief. A watertight rubber grommet shall be provided on the feed-through hole.

12.6.3 Protective Circuitry

A. The positive charging lead to each set of the BS-25A batteries shall be connected to a limiting resistor. Limiting resistors shall be permanently mounted to the nickel cadmium battery holder chassis.

B. A protective diode shall be connected in series with each limiting resistor to prevent possible discharging of BS-25A batteries.

C. A One (1) ampere slow-blow fuse (3 AG post extractor type) shall be located on the chassis of the nickel cadmium battery holder assembly and be accessible when the cover plate is opened.

12.7 DESIGN AND CONSTRUCTION

12.7.1 Cabinets

A. The power supply assembly shall be housed in a single drawn aluminum zero-type cabinet 4x5.125x10.5 having rounded edges and corners and constructed of an aluminum alloy a nominal 0.063 inches thick. Cabinet and front panel layout shall be in accordance with figure 13.

B. The Nicad Battery Holder Assembly is contained in a cabinet similar to the BS-15A and so designed that it will enter the power supply assembly cabinet and act as a cover. The power supply assembly cabinet and the Nicad Battery Holder cabinet shall form a waterproof seal when clamped together.

C. The only holes permitted are those to rivet cabinet catches, strikers, battery rubber feet and carrying handle mounts. No other holes, ventilation louvers, electrical connectors or adjustment controls of any nature whatsoever are to be located on any external cabinet or cover. All controls and connections will be located only on the power supply front panel and the Nicad Battery Holder cover plate.

D. One collapsible handle the same as that specified in Section 11.7.1 D shall be provided on the rear center of the power supply assembly cabinet. The handle is to be designed to provide at least six (6) inches between supports and be permanently attached to the cabinet.

E. Cabinet and cover shall have three sets of four (4) rubber feet permanently riveted to cabinet.

F. Cabinet catches and strikers (Nielsen Hardware Corp. or equal) shown in figure 10 shall be placed on the power supply assembly cabinet to permit compatihility with the FM-5B transceiver cabinet in the A-B^3 base station configuration shown in figure 7. One additional pair of strikers shall be placed on the bottom center portion of the power supply assembly cabinet so that the BS-15A may be placed under and secured to the power supply assembly cabinet.

G. A pair of strikers shall be placed on the nicad battery holder assembly cabinet so that the power supply assembly cabinet and the nicad battery holder cabinet can be clamped together.

H. Cable assemblies and connectors specified in Section 12.4.1 and 12.4.2. D shall be stored in nickel cadmium battery holder compartment when units are clamped together for carrying purposes.

12.7.2 Power Supply Assembly Chassis and Front Panel

A. The power supply assembly chassis shall be permanently attached to the front panel and removable from the cabinet by means of Dzeus type captive fasteners.

B. Same as Section 11.7.3, paragraph A.

C. Same as Section 11.7.3, paragraph B.

D. Heat sinks shall be mounted on the front panel.

12.7.3 NICKEL CADMIUM BATTERY HOLDER CHASSIS AND COVER PLATE

A. Nickel cadmium battery holder chassis shall be permanently affixed to the interior of the cabinet. All components such as limiting resistors, protection diodes and cable assembly shall be positioned so they do not interfere with the insertion and removal of the BS-25A batteries, or present a possible shock hazard.

B. A hinged cover plate shall be provided with a waterproof gasket and so constructed as to facilitate the insertion and removal of the BS-25A batteries. One Dzeus ring type fastener shall be used to assure a tight seal when cover plate is in place.

12.7.4 External Finish

A. All surfaces of the PS/A-16 are to be iridited and the outside surfaces of the power supply assembly cabinet, the front panel and the nickel cadmium battery holder cabinet shall be painted with semi-gloss epoxy paint (painted cabinet samples shall be submitted for approval).

B. Same as Section 10.7.4.B.

C. Same as Section 10.7.4.C.

12.7.5 Nameplate and Labels

A. Same as Section 11.7.6, paragraph A.

B. Same as Section 11.7.6, paragraph B.

C. Same as Section 11.7.6, paragraph C.

D. Same as Section 11.7.6, paragraph D.

E. The nameplate shall be located on the power supply assembly hinged cover plate and secured to the plate by a solvent activated process.

F. The serial number shall be etched or stamped on the nameplate.

G. Battery insertion instructions shall be silk screened or contained on a permanently affixed label which is impervious to battery acid. Instructions shall be located on the inside of the nickel cadmium battery holder assembly and shall be readable when the hinged cover plate is opened.

H. English language charging instructions shall be silk screened to the top side of the hinged cover plate. Foreign language wording shall be on a separate .008 inch thick aluminum plate when specified. Aluminum plate shall be secured to the top side of the hinged cover plate by a solvent activated process. Aluminum plate shall be etched with light letters on a black background.

I. The symbol number of each component or part shall be printed or stamped on the printed circuit board or metal chassis for ease of identification, location and maintenance.

12.7.6 Construction

Section 10.7.7, paragraphs A through E apply.

12.7.7 Components

A. Section 10.7.8 paragraphs A through C, paragraphs I through P and paragraph R apply.

B. Class B insulation per EIA standards shall be used in the power supply transformer.

C. To assure minimum stocking of spare parts, manufacturer shall utilize components of such physical and electrical value to permit interchangeability with that listed in Appendix II or shown in schematic diagram figure 15. Any deviation in circuitry or component selection from that listed shall be submitted to the Government for approval.

12.8 OPTIONAL ACCESSORIES

12.8.1 Spare Parts Kit

A kit shall be provided to support five (5) PS/A-16 power supplies. This kit shall consist of all components selected on a basis of those

most likely to fail. The cost of one kit shall not exceed the cost of one complete PS/A-16. The contractor shall submit a parts list for this kit for Government approval.

13.0 OPS/PA-20 POWER AMPLIFIER

13.1 GENERAL

A. The PA-20 specified below is used in conjuction with the OPS/FM-5B transceiver. It shall be regared as a separate line item for ordering purposes. Prospective contractors bidding on the OPS/FM-5B must also be prepared to produce or otherwise provide the PA-20 power supply.

B. The PA-20 is a solid state power amplifier capable of operating over a frequency range of 150 to 170 MHz. It is designed to provide 20 watts of RF power to the antenna when 5 watts of excitation is received from the FM-5B. The PA-20 conveniently clamps to the FM-5B cabinet and permits push-to-talk operation. It is powered by either a standard 12-volt lead acid battery or the OPS/PS/A-16 power supply.

13.1.1 Standard Test Conditions

A. The test voltage for specifications contained herein shall be 13.6V D.C. All other standard test conditions apply.

B. All measurements are to be performed using the OPS/FM-5B as the driver. Driver shall provide 5 watts input power.

13.1.2 PA-20 Operating Voltage

The PA-20 shall be capable of operating from 13.6 V D.C. $\pm$ 20% (10.9 - 16.3 V D.C.). Between 13.6 V and 16.3 V D.C., the PA-20 shall perform in accordance with all specifications. Between 10.9 and 13.6 V D. C., a 4 db reduction in RF power output will be acceptable.

13.1.3 Duty Cycle

A. For the purpose of estimating the overall current consumption of the PA-20, the following formula will be used:
6 seconds transmit, 54 seconds standby for each minute of operation.

B. The PA-20 shall be capable of operating continously for two minutes out of five minutes.

13.1.4 Current Drain

Maximum allowable current drain with 13.6 volts D.C. at full rated RF power output shall not exceed 4A (excluding current drain of FM-5B.)

13.1.5 Input Impedance

The PA-20 shall be designed for an input impedance of 50 ohms and to be fully compatible with the FM-5B RF output circuitry.

13.1.6 Antenna Impedance

A. The PA-20 shall be designed for an antenna with an impedance of 50 ohms, resistive in accordance with all specifications.

B. The PA-20 must operate properly and be stable within frequency range specified below and under antenna mismatch conditions presenting VSWR up to 3.5:1.

13.1.7 Frequency Range

A. Unless otherwise specified the PA-20 shall cover a frequency range of 150 to 170 MHz. Optionally, the frequency range may be specified as 146-165 MHz in which case the PA-20 shall be provided and operate in accordance with all specifications contained herein.

B. Two modification kits shall be made available when specified to permit field conversion of the PA-20 frequency range as follows:

1. Convert PA-20 from 150-170 MHz to 146-166 MHz
2. Convert PA-20 from 146-165 MHz to 150-170 MHz

13.1.8 Size and Weight

The PA-20 dimensions shall be in accordance with specifications contained in Figure 16. The PA-20 shall weigh no more than two pounds.

13.2 PA-20 Electrical Specifications

13.2.1 Minimum Carrier Power Output

Minimum RF power output over the full frequency range shall be 20 watts at 13.6 V D.C., as defined and tested in EIA Standard RS-152A, Section 2.

13.2.2 Spurious and Harmonic Radiation

All spurious radiation shall be attenuated below the maximum level of emission of the carrier in accordance with the following formula:

Spurious attenuation in db = $43 + 10 \log_{10}$ (power output in watts).

13.2.3 FM Hum and Noise Level

Same as Section 10.2.5A and B.

13.2.4 AM Hum and Noise Level

Same as Section 10.2.6

13.2.5 Temperature Stability

The RF power output shall not decrease more than 3 db over the temperature range -30° to +60° C., compared with rated output at 25° C.

13.3 Operating Controls and Adjustments

A. No operating controls shall be provided.

B. Power amplifier adjustments shall be grouped and located behind the hinged cover plate

13.4 Connectors and Cable Assemblies

13.4.1 D.C. Power Cable Assembly to FM-5B

The DC power cable assembly shall consist of an 18-inch long weatherproof cable terminated in a two-pin keyed female connector (Amphenol 80-865 or equal) compatible with the power input male receptacle on the FM-5B. The opposite end of the cable shall be

permanently attached to the PA-20. The cable shall enter the front panel of the PA-20 through a watertight rubber grommet, and an internal clamp shall be provided for strain relief. The cable shall be UL type SV 18/2 300 V with rubber or neoprene insulation.

13.4.2 Primary Power Input Cable Assembly

Same as that specified in Section 11.5.1. This cable shall not be provided.

13.4.3 RF Power Input Cable Assembly

The RF power input cable assembly shall consist of a 12-inch length of RG-58A/U cable terminated in a PL-259 connector and UG 175/U adapter compatible with the S0239 female receptacle on the FM-5B. The opposite end of the cable shall be permanently attached to the PA-20. The cable shall enter the front panel of the PA-20 through a watertight rubber grommet, and an internal clamp shall be provided for strain relief.

13.4.4 Primary Power Input Receptacle

The primary power input receptacle shall be a two pin keyed male polarized receptacle (Amphenol 80-864 or equal) and located on the rear bottom side of the PA-20 cabinet. Polarity of pins shall be compatible with primary power input cable assembly female connector specified in Section 11.5.1.

13.4.5 Antenna Connector

This antenna connector shall be an SO-239 type UHF female coaxial receptacle (Amphenol 83-IR or equal) located on the upper edge of the front panel. Connector shall be attached by four Philips head screws which fasten to either clinch type inserts (Penn Engineering or equal) or tapped holes in the front panel. A rubber gasket shall be provided between the SO-239 and the front panel to assure a waterproof seal.

13.5 PROTECTIVE AND INDICATING DEVICES

13.5.1 Polarity Protection

The primary power input circuit shall include a low loss diode in series with the power changeover relay to protect the transceiver from damage in the event the external power source has been connected with the wrong polarity.

13.5.2 Fuse

A. A fuse no larger than 8 A shall be located on the right side of the PA-20 behind the hinged cover plate. Fuse and fuse holder shall be Bussman 3AG extractor post mount type or equal. Fuse shall prevent damage to the PA-20.

B. One spare fuse shall be provided and clip mounted to the inside surface of the hinged cover plate.

13.5.3 Transistor Protection

Final RF Amplifier transistors shall be protected from damage when the amplifier is exposed to the following conditions:

1. Input voltage in the range 13.6 V DC ±20%
2. Ambient temperature in the range -30° to +60° C.
3. Misalignment of tuning adjustments.
4. Open circuit or short circuit antenna loads for a period of at least 10 seconds.

13.5.4 R.F. Power Output Indicator

A. A visual type of R. F. output indicator shall be located on the front panel. The indicator light, when illuminated, indicates that the transmitter is operating and delivering R. F. power to the antenna. Indicator lamp shall be so designed that a minimum of R. F. power is required to provide a noticeable illumination in daylight.

B. R. F. output indicator holder shall be provided with a waterproof seal.

13.6 DESIGN AND CONSTRUCTION

13.6.1 Housing

A. The PA-20 power amplifier housing shall be constructed in accordance with figure 16. An extrusion and two end plates constructed of aluminum no less than .063 inches thick shall form the PA-20 housing. One aluminum end plate shall be attached to the left side of the housing (facing FM-5B) and be used as a heat sink. The other end plate shall be attached to the right side of the housing and serve as a frame for the hinged cover plate. Rubber gaskets shall be provided between end plates and housing to assure a waterproof seal.

B. The hinged cover plate, as shown in figure 16, shall be separately fabricated from the end plate and attached to the face of the end plate by a heavy-duty hinge riveted to the cover plate. The hinge shall be spring loaded so that the cover plate is normally in an open position. The cover plate shall be provided a waterproof gasket. One captive Dzeus type fastener shall be used to assure a waterproof seal when cover plate is in place.

C. Cables and connectors shall be located on the front and bottom surfaces of the PA-20 in accordance with specifications in Section 13.4. The only holes permitted are those for end plates, mounting bracket, hinge, cables, connectors and R. F. indicator light. No other holes or ventilation louvres are to be located on any part of the external cabinet.

D. All external cabinet screws other than those for mounting bracket shall be Philips head type. Screws shall enter tapped holes or clinch type inserts (Penn Engineering Corp. or equal).

E. Mounting bracket shall provide a spring loaded clamp which permits convenient attachment or removal of the PA-20 to the FM-5B. Bracket shall be fabricated of aluminum and so constructed that it will engage the FM-5B strikers shown in figure 7 when the FM-5B is used as a mobile or base station.

13.6.2 External Finish

A. All surfaces of the PA-20 are to be iridited and the outside surfaces of the cabinet and cover shall be painted gray with semi-gloss epoxy paint (painted cabinet samples shall be submitted for approval).

B. Same as Section 10.7.4 B.

C. Same as Section 10.7.4 C.

13.6.3 Nameplate and Labels

A. Same as Section 11.7.6 A.

B. Same as Section 11.7.6 B.

C. Foreign language wording, when specified, shall be on a separate aluminum plate. Aluminum plate shall have a minimum thickness of .008 inches and be secured by a solvent acting process. Foreign language plate shall be etched with light letters on a black background.

D. Same as Section 11.7.6 D.

E. The nameplate shall be located on the outside surface of the hinged cover plate and secured to the cover plate by a solvent activated process.

F. The serial number shall be etched or stamped on the nameplate.

G. A tuning procedure chart will be affixed to the inside surface of the hinged cover plate and will include the following information:

1. Step no.
2. Tuning Control (C1, C2, C3, etc.)
3. Test point location
4. Meter Reading (Maximum, Minimum, etc.)
5. Procedure

H. Where the frequency range is specified to be other than 150-170 MHz, see Section 13.1.7 A and B. A label stating frequency range specified shall be permanently affixed to the printed circuit board and be readable when hinged cover plate is opened. A mylar or varnished paper label is acceptable for this purpose.

I. The symbol number of each component or part shall be printed or stamped on the printed circuit board, metal chassis or relay containers for ease of identification, location and maintenance.

13.6.4 CONSTRUCTION

A. Same as Section 10.7.7 A.

B. Same as Section 10.7.7 B.

C. The PA-20 must be subject to and comply with Vibration Stability requirements specified in EIA Standards RS-152-A and RS-204 with the following exception:

Harmonic motion amplitude shall be .05" (total excursion of .1") between 10 and 30 Hz, and shall be .0125" (total excursion of .025") between 30 and 60 Hz.

D. Same as Section 10.7.7 D.

E. Same as Section 10.7.7 E.

F. PA-20 circuity shall be as shown in schematic diagram figure 17. Any deviation in circuitry from that listed shall be submitted to the Government for approval.

G. A current sensing magnetic reed type relay (Hamlin MRR-2-CD or equal) shall be connected in series with the DC power line. This device samples the current drawn by the FM-5B. When the FM-5B is placed in the transmit mode the magnetic reed energizes a relay which performs the following functions:

1. Applies +12 V DC to the PA-20
2. Disconnects the FM-5B from the antenna and connects the output of the FM-5B to the input of the PA-20.

3. Simultaneously with 1 and 2 above connects the output of the PA-20 to the antenna.

H. Relay and reed switch shall be fully enclosed and soldered into circuits.

I. Coil forms are to be of such construction that they will not warp or become loose due to heat or when equipment is subjected to vibration tests outlined in paragraph C above.

J. Tuning of PA-20 shall be accomplished by capacitive trimmers. These trimmers shall be such that alignment tool specified in Section 11.7.9.B is compatible.

13.6.5 Components

A. Same as Section 10.7.8 A.

B. Same as Section 10.7.8 B.

C. Same as Section 10.7.8 C.

D. Printed circuit board shall be of fiberglass epoxy construction.

E. All circuit board component connections shall contain eyelets for ease of soldering, maintenance and circuit reliability.

F. Silicon transistors are to be used throughout the PA-20.

G. Same as Section 10.7.8 H.

H. Lockwashers shall be used on screws holding printed circuit board.

I. Same as Section 10.7.8 J.

J. Same as Section 10.7.8 K.

K. Same as Section 10.7.8 L.

L. Same as Section 10.7.8 M.

M. Same as Section 10.7.8 N.

N. Protective fungus treatment shall be applied to completed assemblies, or units of equipment such as but not limited to R. F. coils, chokes, etc. prior to assembly.

O. Same as Section 10.7.8 P.

P. To assure minimum stocking of spare parts, manufacturer shall utilize components of such physical and electrical value to permit interchangeability with that listed in Appendix II or shown in schematic diagram figure 17. Any deviation in circuitry or component selection from that listed shall be submitted to the Government for approval.

Q. Same as Section 10.7.8 R.

13.7 OPTIONAL ACCESSORIES

13.7.1 Spare Parts Kit

A kit shall be provided to support five (5) PA-20 power amplifiers. This kit shall consist of all components on a basis of those most likely to fail. The cost of one kit shall not exceed the cost of one complete PA-20. The contractor shall submit a parts list for this kit for Government approval.

14.0 QUALITY ASSURANCE PROVISIONS

14.1 Contractor's Inspection Responsibility

The contractor is responsible for the performance of all inspection requirements as specified herein. Except as otherwise specified, the contractor may use his own or any other inspection facilities and services acceptable to the Government. Inspection records of the examination and tests shall be current and available to the Government upon request. The Government reserves the right to perform any of the inspections set forth in the specification where such inspections are deemed necessary to assure that the deliverable items conform to the prescribed requirements.

14.2 Contractor's Quality Control System

A. The contractor shall prepare a manual of quality control tests and procedures which details the quality control systems he proposes to use to assure compliance with all specifications contained herein. The contractor's quality control system shall specifically relate to the radio transceivers and accessories specified in the contract. The manual shall include, but not be limited to incoming materials, inspection (examination and test) stations, lot sizes, sample sizes, frequency of sampling, criteria for acceptance (100% testing, Acceptable Quality Level, Average Outgoing Quality Level, etc.), records of inspection, special controls, identification and segregation of lots, names of officials responsible for quality control, and an effective system for identifying the inspection status of lots at various stages of inspection. It shall also include a positive procedure for identification and segregation of non-conforming material to prevent unauthorized use and intermingling with conforming supplies.

B. Contractor's quality control procedures, and subsequent changes thereto, shall be coordinated with and approved by the Government prior to use.

14.3 STANDARD TEST CONDITIONS

14.3.1 Definition

Standard test conditions are those which shall apply to the transceivers and associated equipment while they are being tested for minimum requirements. All test methods and performance values specified herein apply. Applicable standards established by the Electronic Industries Association (EIA) especially with regard to EIA Standards RS-152-A and RS-204 shall apply only where test methods and performance values are not specified.

14.3.2 Test Voltage

The Standard Test Voltage for OPS/FM-1B and OPS/FM-5B shall be 12 volts DC. The Standard Test Voltage for OPS/PA-20 shall be 13.6 volts DC. Voltages to be measured at the battery input terminals of the equipment.

14.3.3 Standard Test Modulation

A. Transmitters

The Standard Test Modulation for transmitters shall be 1000 Hz at such a level to produce 2/3 of full rated deviation.

B. Receivers

The Standard Test Modulation for receivers shall be 2/3 of maximum rated system deviation at 1000 Hz.

14.3.4 Standard Squelch Condition

The squelch control shall be unsquelched to its maximum extent.

14.3.5 Standard Input Signal Source

A standard input signal source is a calibrated signal generator whose internal plus external resistance is 50 ohms. For all tests, except where otherwise specified, the frequency of the signal generator shall be adjusted to the center frequency of the channel on which the receiver is intended to operate.

14.3.6 Standard Temperature and Humidity

Temperature range 20° C to 35° C.
20° to 30° C, zero to 90 percent humidity
30° to 35° C, zero to 70 percent humidity

14.3.7 Audio Output Level

A. FM-1B, 150 mw speaker input or 2.5 mw earphone input.

B. FM-5B, 500 mw speaker input or 2.5 mw earphone input.

14.3.8 Test Frequency

Unless otherwise specified, the standard test frequencies shall be 148 MHz, 160 MHz and 170 MHz.

14.3.9 Standard RF Output Load

50 ohms non-radiation resistive termination into which the transmitter shall normally operate.

14.3.10 Adjacent Channel Selectivity

Adjacent channel selectivity shall be measured at each of the test frequencies specified in 14.3.8 above. The smallest ratio in db achieved at any one test frequency shall be used to specify the receiver selectivity.

14.3.11 Receiver Protection Test

This test shall be used to assure compliance with Section 10.6.4 and 11.6.4. The test shall consist of placing two transceivers so that they are parallel and spaced one foot apart. Whip antennas shall be connected to each set. The transmitter of one set shall be operated for a period of two minutes on a frequency. The receiver of the second set shall be operated for the same period on the same frequency without failure. Thereafter, the receiver that was used shall be tested for sensitivity requirements specified in Sections 10.3.1 and 11.3.1.

14.3.12 Rain Environmental Test

A. The OPS/FM-1B unit shall meet the Rain Test Procedure 2 outlined in MIL E-5272 (C Issue) specifications entitled "Environmental

Test of Aeronautical and Associated Equipment", with the following variation: The equipment shall be subjected to a total test time of five (5) minutes in lieu of the two (2) hours specified.

B. OPS/FM-5B shall be tested per Section A above in the man-pack configuration with the FM-5B inserted in the OPS/CC-16 carrying case. This test shall also apply when the FM-5B and BS-15A are clamped together for transportation purposes. (See side view figure 6).

14.4 Preproduction Model Inspection

A. This inspection will be performed by the Government unless otherwise specified in the contract. It shall consist of any inspections (examinations and tests) which are necessary to assure compliance with all specifications.

B. Two (2) preproduction models of each contract item shall be furnished to the Government. One transceiver shall be aligned to operate on frequencies F_1=148.0, F_2=148.600 MHz, the other on F_1=169.050, F_2=170.00 MHz and shall include crystals for these frequencies. Crystals for the frequency 160.0 MHz also shall be furnished but not installed. One OPS/PA-20 power amplifier shall be aligned to 148 MHz and the other to 170 MHz.

14.5 Inspection of End Item

Inspection of end item shall be in accordance with Government approved quality assurance requirements specified in Section 14.1 and 14.2. The contractor shall also perform the inspection specified herein. However, this does not relieve the contractor of his responsibility for performing any additional inspection which is necessary to control the quality of the product and to assure compliance with all specifications. Unless otherwise specified the relative order of tests contained herein may be rearranged at the discretion of the contractor.

14.5.1 Visual Examination

Examination of each completed end item for appearance and workmanship defect (See Tables I and II) which do not affect serviceability shall be in accordance with MIL-STD 105, Inspection Level II, AQL 4.0% defects. Samples shall be selected from each day's production.

TABLE I

VISUAL INSPECTION OF ASSEMBLED UNIT

	OPS/FM-1B	OPS/FM-5B	OPS/PS/A-16	OPS/PA-20
Size and weight	10.1.9	11.1.10	12.7.1	13.1.8
On-off switch, volume control	10.4.1			
On-off switch		11.4.1	12.3.1	
Output Voltage Control			12.3.2	
Squelch Control	10.4.2	11.4.2		
Push-to-talk Switch Housing	10.4.3B			
Microphone, push-to-talk switch, microphone bracket and cable		11.4.5		
Two frequency switch	10.4.4	11.4.4		
Absence of other external controls	10.4.5	11.4.7	12.3.5	13.3A
RF Power Amplifier Adjustments		11.4.6		13.3B
External Power Receptacle	10.5.1	11.5.3	12.4.4 12.4.5	13.4.4
Antenna Connector	10. 5.2	11.5.4		13.4.5
Earphone Jack	10.5.3	11.5.5		
Battery Condition Indicator		11.6.5		
RF Output Indicator		11.6.6		13.5.4
Metering socket and squelch pin jack		11.5.6		
Pilot Light			12.3.4	
Fuses		11.6.2	12.5.3	13.5.2
Primary Power Output cable assembly		11.5.1	12.4.1	
D.C. Power Cable Assembly				13.4.1

Table I (Continued)

	OPS/FM-1B	OPS/FM-5B	OPS/PS/A-16	OPS/PA-20
RF Power input cable assembly				13.4.3
AC plug and cord			12.4.2	
Charging input cable assembly			12.6.2	
Power output cable assembly		11.5.2		
Cabinet	10.7.1	11.7.1	12.7.1	13.6.1
External Finish	10.7.4	11.7.4	12.7.4	13.6.2
Mouthpiece	10.7.5C			
Nameplate and labels	10.7.6	11.7.6	12.7.5	13.6.3
Meter Pin Jack			12.4.6	
Allen/Spline Wrench		11.7.9B		

TABLE II

VISUAL INSPECTION WITH REMOVAL OF CABINET

	OPS/FM-1B	OPS/FM-5B	OPS/PS/A-16	OPS/PA-20
Top and Bottom plates	10.7.3			
Chassis	10.7.2	11.7.2	12.7.2	
Fuses	10.6.2			
Battery Insertion Instructions	10.7.6H	11.7.6G	12.7.5G	
Chassis Serial Number	10.7.6G	11.7.6F	12.7.5F	13.6.3F
Component Labelling	10.7.6J	11.7.6I	12.7.5I	13.6.3I
Microphone/Speaker	10.7.5A			

Table II (Continued)

	OPS/FM-1B	OPS/FM-5B	OPS/PS/A-16	OPS/PA-20
Microphone/Speaker Mounting	10.7.5B			
Grille and membrane	10.7.5D	11.7.5		
Construction	10.7.7	11.7.7	12.7.6	13.6.4
Components	10.7.8	11.7.8	12.7.7	13.6.5
Printed Circuit Board Removal	10.7.9A	11.7.9A		
Alignment Tool	10.7.9B	11.7.9B		
Alignment Procedure Steps	10.7.9C	11.7.9C		13.6.3G
Crystals	10.1.7,8	11.1.7,8		
Metering Socket and squelch pin jack	10.5.4			
Polarity Protection	10.6.1	11.6.1	12.5.1	13.5.1
Speaker		11.7.5		
Allen/Spline Wrench	10.7.9B			
Push-to-talk switch	10.4.3A			

14.5.2 Electrical Inspection of End Item

A. General Electrical Tests:

The contractor shall subject 100% of the production units to all the electrical tests specified in Tables III and IV to demonstrate compliance with specifications.

TABLE III

OPS/FM-1B

GENERAL ELECTRICAL TESTS

	Applicable Specification	Limit
RECEIVER		
Quieting Sensitivity	10.3.1	0.6 uV. max.
Squelch Sensitivity	10.3.2	
Threshold		0.3 uV. max.
Tight		2.0 uV. max.
Audio Output		
Max. Output	10.3.9	150 mW min.
Min. Output	10.4.1	10 mW nominal
Current Drain	10.1.4	
Squelched		8 mA max.
150 mW		50 mA max.
Low line Operation	10.1.1	Functional
High line Operation	10.1.1	Functional
Receiver Frequency	10.3.6	Operating Frequency only
Metering Positions	10.5.4	Functional
TRANSMITTER		
RF Output	10.2.1	1.5 W min.
Current Drain	10.1.4	400 mA +30 mA for each 0.1 W above 1.5 W
Modulation	10.2.3	±15 KHz (wideband) ±5 KHz (narrowband)
Low line Operations: 10.0 Volts	10.1.1	Functional
High line Operation: 15.0 Volts	10.1.1	Functional

Table III (Continued)

	Applicable Specification	Limit
Metering Positions	10.5.4	Functional
Transmitter Frequency		Operating Frequency only

TABLE IV

OPS/FM-5B

GENERAL ELECTRICAL TESTS

	Applicable Specification	Limit
RECEIVER		
Quieting Sensitivity	11.3.1	0.6 uV max.
Squelch Sensitivity	11.3.2	
Threshold		0.30 uV max.
Tight		2.0 uV max.
Audio Output	11.3.9	
Max. Output		500 mW min.
Min. Output		10 mW min.
Current Drain	11.1.4	
Squelched		8.0 mA max.
500 mW		80.0 mA max.
Low line Operation 10.0 Volts	11.1.1	Functional
High line Operation 16.3 Volts	11.1.1	Functional
Receiver Frequency	11.3.6	Operating Frequency only
Metering Position	11.5.6	Functional
Battery condition meter check	11.6.5	Green above 11 volts
TRANSMITTER		
RF Output	11.2.1	5.0 W min.
Current Drain	11.1.4	1.2 amp. +0.2 amp. each add 0.5W
Modulation	11.2.3	±15 KHz max (wideband) ±5 KHz max (narrowband)

Table IV (Continued)

	Applicable Specification	Limit
Low line Operation 10.0 Volts	11.1.1	Functional
High line Operation 16.3 Volts.		Functional
Transmitter Frequency		Operating Frequency only
Metering Positions	11.5.6	Functional

B. Comprehensive Electrical Tests:

One unit selected at random from the first 50 production units shall be subjected to comprehensive electrical tests specified in Tables V and VI. For subsequent lots, a minimum of 1 unit per 100 produced (not less than 1 unit every 15 days) shall be selected.

TABLE V

OPS/FM-1B

COMPREHENSIVE ELECTRICAL TESTS

	Applicable Specification	Limit
RECEIVER		
Quieting Sensitivity	10.3.1 A&B	0.6 uV max.
Usable Sensitivity	10.3.1 C	0.5 uV max.
Squelch Sensitivity	10.3.2	
Threshold		0.3 uV max.
Tight		2.0 uV max.
Modulation Bandwidth	10.3.3	±15 KHz (wideband) ±5 KHz (narrowband)
Adjacent Channel Selectivity	10.3.4	
+50 KHz (wideband)		50 db min.
-50 KHz (wideband)		50 db min.
+30 KHz (narrowband)		50 db min.
-30 KHz (narrowband)		50 db min.
Spurious and Image Response	10.3.5	40 db min.

Table V (Continued)

	Applicable Specification	Limit
Oscillator Range	10.3.6	±200 Hz
Hum/Noise	10.3.7	40 db min.
Audio Response	10.3.8	+2 to -6 db
Audio Power Output		
Max. Output	10.3.9	150 mW min.
Distortion at 150 mW	10.3.10	10% max.
Min. Output	10.4.1 A	10 mW nominal
Earphone Output	10.3.9	2.5 mW min.
Current Drain	10.1.4	
Squelched		8 mA max.
150 mW		50 mA max.
Receiver Frequency Stability	10.3.6	±0.0025% max. from -30° C to +60° C
Receiver Protection	14.3.11	0.6 uV max.
Power Output 12 Volts	10.2.1	1.5 W min.
10 Volts	10.1.1	0.75 W min.
Current Drain	10.1.4	400 mA max. +30 mA for each additional 0.1 W
Modulation	10.2.3	±15 KHz (wideband) ±5 KHz (narrowband)
Modulation Limiting	10.2.7	±15 KHz (wideband) ±5 KHz (narrowband)
Spurious and Harmonics	10.2.4	$db=43 + 10 \log_{10} P_o w$
FM Hum/Noise Level	10.2.5	40 db (wideband) 35 db (narrowband)
AM Hum/Noise Level	10.2.6	35 db min.
Audio Response	10.2.9	+2 db to -8 db
Frequency Range	10.1.6	148 MHz min. 170 MHz max.
Oscillator Stability	10.2.2 A	±0.0025% (wideband) -30° C to + 60° C
	10.2.2 B	±0.001% (Narrowband) -30° C to +60° C

TABLE VI

OPS/FM-5B

COMPREHENSIVE ELECTRICAL TESTS

	Applicable Specification	Limit
RECEIVER		
Quieting Sensitivity	11.3.1	0.6 uV max.
Usable Sensitivity	11.3.1	0.5 uV max.
Squelch Sensitivity		
Threshold	11.3.2	0.3 uV max.
Tight	11.3.2	2.0 uV max.
Modulation Bandwidth	11.3.3	±15 KHz (wideband) ±5 KHz (narrowband)
Adjacent Channel Selectivity	11.3.4	
+50 KHz (wideband)		50 db min.
-50 KHz (wideband)		50 db min.
+30 KHz (narrowband)		50 db min.
-30 KHz (narrowband)		50 db min.
Spurious and Image Responses	11.3.5	40 db min.
Oscillator Range	11.3.6	±200 Hz
Hum/Noise	11.3.7	40 db min.
Audio Response	11.3.8	+2 db to -6 db
Audio Power Output		
Max. Output	11.3.9	500 mW min.
Min. Output	11.4.3A	10 mW nominal
Distortion at 500 mW	11.3.10	10% max.
Earphone Output	11.3.9	2.5 mW min.
Current Drain	11.1.4	
Squelched		8 mA max.
500 mW		80 mA max.
Receiver Stability	11.3.6	±0.0025% max. -30° C to +60° C
Receiver Protection	14.3.11	0.6 uV max.

Table VI (Continued)

	Applicable Specification	Limit
TRANSMITTER		
Power Output 12 Volts	11.2.1	5 W min.
10 Volts	11.1.1	2.5 W min.
16.3 Volts	11.1.1	5 W min.
Current Drain	11.1.4	1.2 amp. max. +0.2 amps. for each additional 0.5 W
Modulation	11.2.3	±15 KHz (wideband) ±5 KHz (narrowband)
Modulation Limiting	11.2.7	±15 KHz (wideband) ±5 KHz (narrowband)
Spurious and Harmonics	11.2.4	db=43 + 10 $\log_{10} P_o$w
FM Hum/Noise Level	11.2.5	40 db min (wideband) 35 db min (narrowband)
AM Hum/Noise Level	11.2.6	35 db min.
Audio Response	11.2.9	+2 db to -8 db
Frequency Range	11.1.6	148 MHz min. 170 MHz max.
Oscillator Stability	11.2.2 A	±0.0025% (wideband) -30° C to +60° C
	11.2.2 B	±0.001% (narrowband) -30° C to +60° C

14.5.3 Environmental Tests

A. Sampling for Environmental Tests:

One unit selected at random from the first 100 production units shall be subjected to Environmental Tests specified in paragraphs B, C and D below. For subsequent lots, a minimum of 1 unit per 1000 produced (not less than 1 unit every 90 days) shall be selected.

B. Vibration and Shock Test

The transceivers shall be subjected to vibration and shock stability tests required for compliance with Section 10.7.7C, 11.7.7C and 13.6.4C. After vibration and shock tests, the unit shall not be repaired, aligned or otherwise changed prior to inspection. Before and after vibration and shock tests the receiver and transmitter shall be tested for compliance with Sections 10.2.1, 10.2.2, 10.3.1, 11.2.1, 11.2.2, 11.3.1 and13.2.1.

C. Rain Environmental Test

The transceivers shall be subjected to the Rain Environmental tests specified in 14.3.12.

D. Temperature Stability Test

The OPS/FM-1B and OPS/FM-5B transceivers shall meet specifications when operated over the temperature range of -30° to $+60^{\circ}$ C within the degradation limits shown in Table VII below.

TABLE VII

TEMPERATURE STABILITY TEST

TEMPERATURE RANGE -30° to $+60^{\circ}$ C	Applicable Specification	Allowable Degradation
Sensitivity	10.3.1, 11.3.1	6 db
Squelch Sensitivity	10.3.2, 11.3.2	6 db
Modulation Acceptance Bandwidth	10.3.3, 11.3.3	20%
Residual Hum and Noise Level	10.3.7, 11.3.7	10 db
Audio Power Output	10.3.9, 11.3.9	6 db
RF Power Output	10.2.1, 11.2.1	3 db
FM Hum and Noise Level	10.2.5, 11.2.5	10 db.

14.5.4 Life Test

A. After completion of the inspection specified in Section 14.5.1 through 14.5.3, a sample unit shall be selected from the first 50 production units. For subsequent lots, a minimum of 2 sample units per 100 produced (not less than 2 units every 30 days) shall be selected.

B. Units shall be operated continuously for 48 hours at a duty cycle of 10% transmit and 90% receive (unsquelched). Upon conclusion of this test, the units shall be tested for compliance with Sections 10.2.1, 10.3.1, 10.3.9, 11.2.1, 11.3.1 and 11.3.9.

C. The first two units tested per paragraph B above shall be operated continuously for 500 hours. At the conclusion of this life test, the units should be operable. Should any units fail to meet specifications contained herein, the contractor shall provide in writing to the Government either detailed justification for deviations found or corrective action taken.

14.5.5 Operational Inspection

A. Immediately prior to packaging, 100% of the production transceivers shall be tested as follows:

B. Receiver - Adjust the squelch control for normal operation. A listening test for reception of a standard test signal shall be made on each channel.

C. Transmitter - A voice and tone transmission shall be made on each channel. Qualitative listening tests shall be made on a standard receiver.

APPENDIX I

CRYSTAL SPECIFICATIONS FOR OPS/FM-1B AND OPS/FM-5B

A. RECEIVER CRYSTAL

1. **Description**

   Metal-plated quartz plate wire or spring mounted metal holder.

2. **Mode of Operation**

   Fundamental.

3. **Correlation**

   Series Resonance.

4. **Holder**

   a. Equivalent to Military HC-25/U Holder.

   b. Holder HC/25/U to be anodized or painted black in color.

   c. The actual operating frequency, not the crystal frequency, will be stamped on the side of the receiver (first mixer) oscillator crystals.

   d. The frequency stamp on the receiver crystal cases shall be preceded by an "R".

5. **Frequency Range**

   16.0 to 19.50 MHz.

6. **Operating Temperature Range**

   -30° to $+60^{\circ}$ C

7. **Tolerance on Nominal Frequency**

   Crystal to be finished at a nominal room temperature of $+25^{\circ}$ C $\pm 3^{\circ}$C to $\pm 0.002\%$ of the specified frequency. The crystal frequency shall not drift more than $\pm 0.002\%$ from the frequency at 25° C as the temperature is varied from -10° C to $+50^{\circ}$ C.

8. **Effective Series Resistance**

   15 ohms Maximum (16.0 to 19.50 MHz).

9. **Level of Drive**

   Maximum level of drive 1.0 milliwatts.

10. **Static Capacitance**

    6 mmf ± 1 mmf

11. Condition of Test Holder

Grounded.

12. Formula - Multiplication Factor

$$Fx = \frac{FC - 455\ kHz}{9}$$

Fx = Crystal Frequency

Fc = Carrier frequency.

B. TRANSMITTER CRYSTAL

1. Description

Metal plated quartz plate wire or spring mounted in metal holder.

2. Mode of Operation

Crystal designed to operate on the fundamental thickness shear frequency of the quartz plate.

3. Correlation

a. Crystal designed to operate into lead capacitance of 32 mmf $\pm$0.5 mmf. (For Wide-band units)

b. Crystal designed to operate into lead capacitance of 35 mmf $\pm$0.5 mmf. (For Narrow-band units)

4. Holder

a. Equivalent to Military HC-25/U Holder.

b. Holder HC-25/U to be painted black in color. (For Wide-band units)

c. Holder HC-25/U to be painted green in color. (For Narrow-band units)

d. The actual operating frequency, not the crystal frequency, will be stamped on the side of the transmitter oscillator crystal.

e. The frequency stamped on the transmitter crystal shall be preceded by a "T".

5. Frequency Range

8.0 to 10.0 MHz.

6. Operating Temperature Range

-30° C to $+60^{\circ}$ C

7. Crystal Finish and Cut

Crystal to be finished to $\pm$0.002% of the exact frequency required at a nominal room temperature of $+25^{\circ}$ C. Crystal unit must use an AT cut blank.

8. **Tolerance on Nominal Frequency**

   a. Crystal frequency drift shall not exceed $\pm 0.002\%$ of that measured at room temperature ($25^{\circ} \pm 3^{\circ}$ C) over the temperature range of -30° C to $+60^{\circ}$ C. (For Wide-band units)

   b. Crystal frequency drift shall not exceed $\pm 0.001\%$ of that measured at room temperature (25°C $\pm 3^{\circ}$C) over the temperature range of -30°C to $+60^{\circ}$C. (For Narrow-band units)

9. **Effective Series Resistance**

   35 ohms over frequency range.

10. **Level of Drive**

    One milliwatt over frequency range.

11. **Static Capacitance**

    4 mmf to 6 mmf.

12. **Condition of Testing**

    Holder grounded.

13. **Formula - Multiplication Factor**

    $$Fx = \frac{FC}{18}$$

    Fx = Crystal frequency.

    Fc = Carrier frequency.

APPENDIX II

COMPONENT LIST

Reference Symbol	Item and Description	Manufacturer
R405	Resistor, composition; 18K, 10%, 1/2 watt	Allen Bradley, Stackpole, IRC Ohmite
R402	Resistor, composition; 1K ohm, 10%, 1/4 watt	same as above
R1, 16, 30, 33, 35, 36, 40, 42, 47, 105, 106, 111, 112, 115, 128, 129	Resistor, composition; 10K ohm, 10%, 1/4 watt	same as above
R2, 11, 19, 21, 23, 25 34, 38, 52, 113, 116, 131	Resistor, composition; 4.7K ohm, 10%, 1/4 watt	same as above
R3, 7, 10, 114, 117, 137, 141	Resistor, composition; 470 ohm, 10%, 1/4 watt	same as above
R4, 14, 17, 132	Resistor, composition; 1.5K ohm, 10%, 1/4 watt	same as above
R5, 12, 44	Resistor, composition; 3.3K ohm, 10%, 1/4 watt	same as above
R6, 15, 31, 37, 107	Resistor, composition; 2.2K ohm, 10%, 1/4 watt	same as above
R8, 39, 41, 43, 55, 119, 121	Resistor, composition; 100K ohm, 10%, 1/4 watt	same as above
R9, 32, 46, 127, 130	Resistor, composition; 47K ohm, 10%, 1/4 watt	same as above
R18, 20, 22, 24, 53, 54, 108, 110	Resistor, composition; 33K ohm, 10%, 1/4 watt	same as above
R409	Resistor, composition; 680 ohm 10%, 1/4 watt	same as above
R139	Resistor, composition; 120 ohm 10%, 1/4 watt	same as above
R26	Resistor, composition; 27K ohm, 10%, 1/4 watt	same as above

Reference Symbol	Item and Description	Manufacturer
R27	Resistor, composition; 6.8K ohm, 10%, 1/4 watt	Allen Bradley, Stackpole, IRC Ohmite
R28	Resistor, composition; 1.2K ohm, 10%, 1/4 watt	same as above
R29, 51, 103, 125, 126, 138, 140, 404	Resistor, composition; 1K ohm, 10%, 1/4 watt	same as above
R45, 124, 134	Resistor, composition; 22K ohm, 10%, 1/4 watt	same as above
R48, 120	Resistor, composition; 100 ohm 10%, 1/4 watt	same as above
R49, 102, 104	Resistor, composition; 220 ohm, 10%, 1/4 watt	same as above
R50	Resistor, composition; 180 ohm, 10%, 1/4 watt	same as above
R101, 109	Resistor, composition; 150 K ohm, 10%, 1/4 watt	same as above
R118, 133, 408	Resistor, composition; 330 ohm, 10%, 1/4 watt	same as above
R122, 123	Resistor, composition; 10 ohm, 10%, 1/4 watt	same as above
R135	Resistor, variable; 10K ohm, limiter control	Amperex Electronics Corp.
R136	Resistor, variable; 50K ohm, deviation control	same as above
R401	Resistor, variable, volume; 10K	CTS - No. 140-6616
R403	Resistor, variable, squelch; 5K	CTS - No. 137-6621
C57, 60, 102, 105 153	Capacitor, ceramic disc; 0.005 uf, +80%, -20%, 100 wv	Erie Electronics RMC
C59, 79, 141	Capacitor, ceramic disc; 0.05 ±20%, 25 wv	Erie Electronics CD, RMC, Sprague
C147, 162	Capacitor, ceramic disc; 0.01 uf, +80%, -20%, 25 wv	same as above

Reference Symbol	Item and Description	Manufacturer
C154	Capacitor, ceramic disc; 0.0033 uf, ±10%, 200 wv	Erie Electronics CD, RMC, Sprague
C49, 50, 66, 67, 70	Capacitor, ceramic disc; 0.1 uf, GMV, 12 wv	same as above
C22, 23, 25, 26, 37, 38, 39, 40, 41, 42, 43, 44, 45, 46, 48, 52, 53, 58, 62, 64, 65, 80, 165	Capacitor, ceramic disc; 0.02 uf, +80%, -20%, 25 wv	Erie Technological Products, Inc. Radio Material Corp. Cornell Dubilier El Menco Stackpole
C8, 9, 10, 12, 13, 18, 19, 27, 28, 47, 77, 81, 85, 101, 108, 109, 113, 114, 115, 116, 119, 121, 122, 128, 129, 132, 135, 136, 145, 146, 148, 151, 152, 163	Capacitor, ceramic disc; 0.001 uf, GMV, 500 wv	same as above
C402	Capacitor, ceramic disc; 3.3 uf, 10%, 600 v.	same as above
C409	Capacitor, ceramic disc; 1000 pf	same as above
C103, 156	Capacitor, mica; 150 pf, 500 wv	same as above
C158, 159	Capacitor, mica; 51 pf, 300 wv	same as above
C106, 157	Capacitor, mica; 24 pf, 300 wv	same as above
C107, 112, 160	Capacitor, mica; 5 pf, ±2%, 500 wv	same as above
C118, 124	Capacitor, mica; 0.75 pf, 500 wv	same as above
C126	Capacitor, mica; 1 pf, 500 wv	same as above
C139	Capacitor, mica; 47 pf, 500 wv	same as above
C16	Capacitor, mica; 68 pf, 2%, 500 wv	same as above
C11	Capacitor, mica; 3.3 pf, ±10%, 600 wv	Erie Technological Products, Inc. Radio Material Corp., Cornell Dubilier El Menco Stackpole Sprague

Reference Symbol	Item and Description	Manufacturer
C410	Capacitor, fxd, mica; 36 pf, 10%, 300 wv	Erie Technological Products, Inc., Radio Material Corp., Cornell Dubilier El Menco Stackpole, Sprague
C61	Capacitor, mica; 220 pf, ±5%, 300 wv	same as above
C401	Capacitor, dipped mica; 0.05 uf, 5%, 200 wv	same as above
C33, 34, 78, 83, 84	Capacitor, mica; 100 pf, 300 wf	same as above
C403	Capacitor, mica, 100 pf	same as above
C54, 56	Capacitor, mica; 270 pf, ± 0.5 pf, 300 wv	same as above
C55, 133, 134, 140	Capacitor, mica; 390 pf, ±5%, 300 wv	same as above
C51	Capacitor, tubular; 820 pf, ±5%, 300 wv	same as above
C30	Capacitor, plastic; 0.47 pf, ±10%, 500 wv	same as above
C1	Capacitor, plastic, 0.82 pf, ±10%, 500 wv	same as above
C15, 20, 36, 82	Capacitor, ceramic; 1.5 pf, ±10%, 500 wv	same as above
C63, 69, 72, 73, 75,	Capacitor, electrolytic; 22 uf, ±10%, 20 wv	same as above
C68, 71, 111, 149, 150, 161	Capacitor, electrolytic; 6.8 uf, ±10%, 6 wv	same as above
C74	Capacitor, electrolytic; 1.0 uf, ±10%, 35 wv	same as above
C76	Capacitor, electrolytic; 100 uf, ±10%, 15 wv	same as above
C87	Capacitor, mica; 130 pf, ±2%, 500 wv	same as above
C104, 155	Capacitor, variable; 2-20 pf	Amperex Electronic Corp. C010KA/20E

Reference Symbol	Item and Description	Manufacturer
C138, 142, 404, 405, 406, 407, 408	Capacitor, variable; 5-60 pf	Amperex Electronic Corp. CO1MA/60E
L1	Coil, variable; 150-172 mc	RF coils to meet circuit needs per specifications
L2	Coil, variable; 150-172 mc	note as above
L3	Coil, variable; 150-172 mc	note as above
L4	Coil, variable; 17-19.5 mc	note as above
L5	Coil, fixed; 12 mc	note as above
L6	Coil, variable; 17-19.5 mc	note as above
L7	Coil, .455 mc	note as above
L8	Coil, variable; 133-155 mc	note as above
L9	Coil, variable; 133-155 mc	note as above
L10, 11	Coil, variable; 16.5-19 mc	note as above
L12	Coil, variable; .455 mc	note as above
L13	Coil, variable; .455 mc	note as above
L18	Coil, .455 mc	note as above
L101, 102	Coil, variable; 8.3-9.4 mc	note as above
L103	Coil, variable; 25-29 mc	note as above
L104	Coil, variable	note as above
L105	Coil, variable; 75-86 mc	note as above
L106	Coil, variable; 75-86 mc	note as above
L107	Coil, variable; 150-172 mc	note as above
L108	Coil, variable; 150-172 mc	note as above
L109	Coil, variable; 150-172 mc	note as above
L110	Coil, variable; 100 mc	note as above
L111	Coil, variable; 150-172 mc	note as above

Reference Symbol	Item and Description	Manufacturer
L402, 403	Coil, RF, 4.7 uh	RF coils to meet circuit needs per specifications
L401, 404	Coil, RF	note as above
L112, 113, 114	Choke, 0.82 uh	NYTronics, Inc. Trans. Mfg. Co. Torotel, Inc. Dale Electronics, Inc.
L405	Choke	same as above
L14, 19	Choke, 10 uh	same as above
L15	Choke, 1 mh	same as above
L16	Choke, 15 mh	same as above
L17, 115	Choke, 1.6 h	same as above
FL1	Filter, clevite; (NB)	Clevite Corp. TCF-4-12D36A-1
FL2	Filter, clevite; (WB)	Clevite Corp. TCF-6-30D55A-1
RT101, 102	Thermistor, Temp. Comp. (NB)	Fenwal, G.E. Co.
D1, 5, 6, 7, 8,	Diode, type 1N4154	G.E.
D2	Diode, type 1N34A	Erie Corp.
D3, 4	Diode, type 1N542	G.E.
D101, 102	Diode, type 1N3182	Amperex Electronic Corp.
D103	Diode, type 1N4737A	Motorola
D401	Diode, CER-68	Solitron Devices, Inc.
D402	Diode, 1N456	Sylvania Corp.
Q13	Transistor, type 2N3638A or SKA-4164	Fairchild Semiconductor Div.
Q14, 15	Transistor, matched pair; 2N3643 2N3638A or SKA-4165 and SKA-4164	Fairchild Semiconductor Div.

Reference Symbol	Item and Description	Manufacturer
Q106	Transistor, type 2N3948	Motorola Semi-conductors Corp.
Q401	Transistor, PT5655	TRW
Q107	Transistor, type PT5654	TRW
Q105	Transistor, type 2N4072	Motorola Semi-conductors Corp.
Q1	Transistor, type SE5020	Fairchild Motorola
Q2, 3	Transistor, type MPS6507	same as above
Q4, 16, 103, 104	Transistor, type MPS918	same as above
Q101, 102, 108	Transistor, type 2N2563	same as above
Q5	Transistor, type MPS6521	same as above
Q6, 7, 8,	Transistor, type MPS6515	same as above
Q9, 12, 109, 110	Transistor, type MPS6514	same as above
Q10, 11	Transistor, type MPS 6513	same as above
K401	Relay (4PDT, 12.0 VDC) transmit-receive	Potter Brumfield KHP17D11
	Socket, relay	Potter Brumfield 27E006 or 9 KHI
M401	Meter, battery (with spring)	Electro Mechanical Components 122D20 or 123D20
SP401	Speaker, 2-1/2 inch	Oxford Electric Co.
I401	Lamp, indicator	G.E. Co. 331
J403	Connector, antenna (with hardware)	Amphenol SO-239
P1	Plug, male; 17 pin	Amphenol Corp. 223-1117
	Contact, male	Amphenol Corp. 220-PO2
J401	Plug (17 pin)	Amphenol, Series 17
	Contact, female	Amphenol, Series 17

Reference Symbol	Item and Description	Manufacturer
P401	Plug, 14 pin (modified)	ELCO Co. 05-0423-51 or 05-0423-02
J402, J1	Socket, 14-pin (modified)	ELCO Co.
F401	Fuse, 2 amp. 3AG	Litelfuse
MK401	Microphone	Shure Brother, Inc.
SW1, 2	Switch, micro	Cherry Electric
CR1	Crystal, receiver (specify frequency)	Per Appendix II of OPS/FM-1B and OPS/FM-5B Specifications
CR101	Crystal, transmitter (specify frequency)	note as above
	Socket crystal	Connector Corp.
J404	Earphone jack (with hardware)	Switchcraft No. 42A
	Cover, jack	Switchcraft
J405	Connector, male (2-pin); int. battery	Amphenol 80-864
E401, 402	Bead, shielding	Ferrox Cube

NOTE: Selection of components is to be made on an "or equal" basis, provided component is physically and electrically changeable with the manufacturer's item listed.

APPENDIX III

PATENT RIGHT CLAUSE: To protect the interests of the United States Government in its development of VHF-FM tactical communications equipment, the offeror is subject to and shall comply with the Patents Rights Clause incorporated herein, with respect to any proprietary rights to the OPS/FM-1B and OPS/FM-5B equipment and accessories.

PATENT RIGHT (LICENSE) (MAY 1964)

(a) Definitions Used in This Clause

(1) Subject Invention means any invention or discovery, whether or not patentable, conceived or first actually reduced to practice in the course of or under this contract. The term "Subject Invention" includes, but is not limited to, any art, machine, manufacture, design or composition or matter, or any new and useful improvement thereof, or any variety of plant, which is or may be patentable under the patent laws of the United States of America or any foreign country.

(2) Governmental purpose means the right of the Government of the United States (including any agency therof, state or domestic manicipal government) to practice and have practiced (make or have made, use or have used, sell or have sold) any Subject Invention throughout the world by or on behalf of the Government of the United States, or in furtherance of an international program of the United States.

(3) Contract means any contract, agreement grant, or other arrangement, or sub-contract entered into with or for the benefit of the Government where a purpose of the contract is the conduct of experimental, developmental, or research work.

(4) Subcontract and subcontractor mean any subcontract or subcontractor of the Contractor, any lower-tier subcontract or subcontractor under this contract.

(5) To bring to the point of practical application menas to manufacture in the case of a composition or product, to practice in the case of a process, or to operate in the case of a machine or system and, in each case, under conditions as to establish that the Invention is being worked and that its benefits are reasonable accessible to the public.

(b) Rights granted to the Government

(1) The Contractor agrees to and does hereby grant to the Government an irrevocable, nonexclusive, and royalty-free license to practice and have practiced each Subject Invention (made by the Contractor) throughout the world for Governmental purposes. In addition, the Government shall have the right to grant licenses to any foreign government or international organization specifically for use in programs established by international Agreements for research, development, or production of weapons or equipment for mutual defense or other

international programs of the United States and shall include the practice of such Subject Invention in the manufacture, use, and disposition of any article or material, in the use of any method, or in the performance of any service acquired by or for the Government or with funds derived through the Foreign Assistance Program of the Government or otherwise through the Government.

(2) The Contractor further agrees to grant, upon the request of the Government, a license under any Subject Invention (made by the Contractor) to:

(i) any applicant on a nonexclusive, royalty-free basis, unless the Contractor, his licensee, or his assignee demonstrates to the Government, at its request, that effective steps have been taken within three years after a patent issues on such Invention to bring the Invention to the point of practical application or that the Invention has been made available for licensing royalty-free on terms that are reasonable in the circumstances, or can show cause why the principal or exclusive rights should be retained for a further period of time;

(ii) any applicant royalty-free or on terms that are reasonable in the circumstances to the extent that the Invention is required for public use by governmental regulations or as may be necessary to fulfill health needs, or for other public purposes stipulated in the Schedule of this contract.

Nothing contained in this Patent Rights clause shall be deemed to grant any rights with respect to any invention other than a Subject Invention.

PATENTS, DATA, AND COPYRIGHTS

(c) Invention Disclosure and Reports. With respect to subject Inventions (made by the Contractor), the Contractor shall furnish to the Contracting Officer:

(i) a written disclosure of each such Invention within four (4) months after conception or first actual reduction to practice, whichever occurs first under this contract sufficiently complete as to technical detail to convey to one skilled in the art to which the Invention pertains a clear understanding of the nature, purpose, operation and, as the case may be, physical, chemical or electrical characteristics of the Invention, together with a written statement making an election as to whether a United States patent application claiming the Invention will be filed by or on behalf of the Contractor;

(ii) interim reports at least every twelve (12) months, the initial period of which shall commence with the date of this contract, each report listing all such Inventions conceived or first actually reduced to practice more than

three (3) months prior to the date of the report and not listed on a prior interim report, or certifying that there are no such unreported Inventions;

(iii) prior to final settlement of this contract, a final report listing all such Inventions including all those previously listed in interim reports, or certifying that there are no such unreported Inventions; and

(iv) written reports at reasonable intervals, prior to and after final settlement, when requested by the Government, as to

(A) the commercial use that is being made or is intended to be made of such Invention;

(B) the steps taken by the Contractor to bring the Invention to the point of practical application, or to make the Invention available for licensing.

(d) Domestic Filing. Inconnection with each Subject Invention referred to in (c)(i) above:

(i) if the Contractor has elected to file a United States patent application claiming such Invention, the Contractor shall, within six (6) months after the election, file or cause to be filed such application in due form and shall so notify the Contracting Officer at the time of such filing; if the Contractor does not file or cause to be filed such application, he shall notify the Contracting Officer within the six (6) month period;

(ii) if the Contractor has elected not to file or to cause to be filed a United States patent application claiming such Invention, or has made the contrary election but has not filed or caused to be filed such application within six (6) months after the election, the Contractor shall:

(A) inform the Contracting Officer in writing, as soon as practicable, of the date and identity of any public use, sale, or publication of such Invention made by or known to the Contractor or of any contemplated publication by the Contractor;

(B) upon written request, convey to the Government the Contractor's entire right, title and interest in such Invention by delivering to the Contracting Officer such duly executed instruments (prepared by the Government) of assignment and application, and such other papers as are deemed necessary to vest in the Government the entire right, title, and interest aforesaid, and the right to apply for and prosecute patent applications covering such Invention throughout the world, subject to the reservation of a nonexclusive and royalty-free license to the Contractor (and to his existing and future associated and affiliated companies, if any, within

the corporate structure of which the Contractor is a part) which license shall be assignable to the successor of that part of the Contractor's business to which such Invention pertains;

(iii) the Contractor shall furnish promptly to the Contracting Officer on request an irrevocable power of attorney to inspect and make copies of each United States patent application filed by or on behalf of the Contractor covering any such Invention;

(iv) In the event the Contractor, or those other than the Government deriving rights from the Contractor, elects not to continue prosecution of any such United States patent application filed by or on behalf of the Contractor, the Contractor shall so notify the Contracting Officer not less than sixty (60) days before the expiration of the response period and, upon written request, deliver to the Contracting Officer such duly executed instruments (prepared by the Government) as are deemed necessary to vest in the Government the entire right, title, and interest in such Invention and the application, subject to the reservation as specified in paragraph (d)(ii)(B) of this clause; and

(v) the Contractor shall deliver to the Contracting Officer duly executed instruments fully confirmatory of all rights herein agreed to be granted or reserved to the Government.

(e) Foreign Filing. The Contractor, or those other than the Government deriving rights from the Contractor, shall as between the parties hereto, have the exclusive right, subject to the rights of the Government under paragraph (b) of this clause, to file applications on Subject Inventions (made by the Contractor) in each foreign country within:

(i) Nine (9) months from the date a corresponding United States application is filed, or nine (9) months from the date the Contractor discloses a Subject Invention under paragraph (c)(i) above with an election not to file a United States application;

(ii) six (6) months from the date permission is granted to file foreign applications where such filing had been prohibited for security reasons; or

(iii) such longer period as may be approved by the Contracting Officer.

The Contractor shall notify the Contracting Officer of each foreign application filed and, upon written request of the Contracting Officer, convey to the Government the entire right, title, and interest in each Subject Invention in each foreign country in which an application has not been filed within the time above specified, subject to the reservation as specified in paragraph (d)(ii)(B) of this clause.

(f) Withholding of Payment. If the Contractor fails to deliver to the Contracting Officer the interim reports required by (c)(ii) above, or fails to furnish the written disclosures for all Subject Inventions required by (c)(i) above shown to be due in accordance with any interim report delivered under (c)(ii) or otherwise known to the Government to be unreported, there shall be withheld from payment, until the Contractor shall have corrected such failures, either ten percent (10%) of the amount of this contract as from time to time amended, or ten thousand dollars ($10,000), whichever is less. After payment of eighty percent (80%) of the amount of this contract, as from time to time amended, payment shall be withheld until a reserve of either ten percent (10%) or the amount of this contract, or ten thousand dollars ($10,000) whichever is less, shall have been set aside, such reserve or balance thereof to be retained until the Contractor shall have furnished to the Contracting Officer:

(i) the final report required by (c)(iii) of this clause;

(ii) written disclosures for all Inventions required by (c)(i) above which are shown to be due in accordance with interim reports delivered under (c)(ii) above, or in accordance with such final reports, or are otherwise known to the Government to be unreported; and

(iii) the information as to any subcontractor required by (g) below.

No amount shall be withheld under this paragraph when the amount specified by this paragraph is being withheld under other provisions of this contract. The withholding of any amount or subsequent payment thereof to the Contractor shall not be construed as a waiver of any rights accruing to the Government under this contract. This paragraph shall not be construed as requiring the Contractor to withhold any amounts from a subcontractor to enforce compliance with the patent provision of a subcontract. In cost-type contracts, "amount of this contract" shall mean "estimated cost of this contract."

(g) Subcontracts.

(1) The Contractor shall, unless otherwise authorized or directed by the Contracting Officer, include a patent rights clause containing all of the provisions of this Patent Rights clause except provision (f) in any subcontract hereunder where a purpose of the subcontract is the conduct of experimental, developmental, or research work. In the event of refusal by a subcontractor to accept this Patent Rights clause, or if in the opinion of the Contractor this Patent Rights clause is inconsistent with the policy set forth in ASPR 9-107.2 and 9-107.3, the Contractor:

(i) shall promptly submit a written report to the Contracting Officer setting forth the subcontractor's reason for such refusal or the reasons the Contractor is of the opinion that the inclusion of this clause would be so inconsistent, and other pertinent information which may expedite disposition of the matter; and

(ii) shall not proceed with the subcontract without the written authorization of the Contracting Officer.

The Contractor shall not, in any subcontract or by using such a subcontract as consideration therefor, acquire any rights to Subject Inventions for his own use (as distinguished from such rights as may be required solely to fulfill his contract obligations to the Government in the performance of this contract). Reports, instruments, and other information required to be furnished by a subcontractor to the Contracting Officer under the provisions of such a patent rights clause in a subcontract hereunder may, upon mutual consent of the Contractor and the subcontractor (or by direction of the Contracting Officer) be furnished to the Contractor for transmission to the Contracting Officer.

(2) The Contractor, at the earliest practicable date, shall also notify the Contracting Officer in writing of any subcontract containing a patent rights clause, furnish him a copy of such clause, and notify him when such subcontract is completed. It is understood that the Government is a third party beneficiary of any subcontract clause granting rights to the Government in Subject Inventions, and the Contractor hereby assign to the Government all the rights that he would have to enforce the subcontractor's obligations for the benefit of the Government with respect to Subject Inventions. If there are no subcontracts containing patent rights clauses, a negative report is required. The Contractor shall not be obligated to enforce the agreements of any subcontractor hereunder relating to the obligations of the subcontractor to the Government in regard to Subject Inventions.

(h) Licenses Granted by Contractor to Others Subject to Government's Rights. The Contractor recognizes that the Government, or a foreign government with funds derived through Foreign Assistance Program or otherwise through the United States Government may contract for property or services with respect to which the vendor may be liable to the Contractor for royalties for the use of a Subject Invention on account of such a contract. The Contract further recognizes that it is the policy of the Government not to pay in connection with its contracts, or to allow to be paid in connection with contracts made with funds derived through the Foreign Assistance Program or otherwise through the United States Government, charges for use of patents in which the Government holds a royalty-free license. In recognition of this policy, the Contractor agrees to participate in and make appropriate arrangement for the exclusion of such charges from such contracts or for the refund of amounts received by the Contractor with respect to any such charges not so excluded.

(i) Rights to Disclose Subject Inventions. The Government may duplicate and disclose reports and disclosures of subject Inventions required to be furnished by the Contractor or a subcontractor pursuant to this Patent Rights clause.

RIGHTS IN TECHNICAL DATA--SPECIFIC ACQUISITION (MAY 1964)

(a) Definition. Technical Data as used in this clause means technical writings, sound recordings, pictorial reproductions, drawings, or other graphic representations and works of a technical nature, whether or not copyrighted, which are specified to be delivered pursuant to this contract. The term does not include financial reports, cost analyses, and other information incidental to contract administration.

(b) Government Right. The Government may duplicate, use and disclose in any manner and for any purpose whatsoever, and have others do so, all or any part of the technical data delivered by the Contractor to the Government under this contract.

(c) Material Covered by Copyright.

(1) The Contractor agrees to and does hereby grant to the Government, and to its officers, agents, and employees acting within the scope of their official duties, a royalty-free, nonexclusive and irrevocable license throughout the world for Government purposes to publish, translate, reproduce, deliver, perform, dispose of, and to authorize others so to do, all technical data now or hereafter covered by copyright.

(2) No such copyrighted matter shall be included in technical data furnished hereunder without the written permission of the copyright owner for the Government to use such copyrighted matter in the manner above described.

(3) The Contractor shall report to the Government (or higher-tier Contractor) promptly and in reasonable written detail each notice or claim of copyright infringement received by the Contractor with respect to any technical data delivered hereunder.

(d) Relation to Patents. Nothing contained in this clause shall imply a license to the Government under any patent, or be construed as affecting the scope of any license or other right otherwise granted to the Government under any patent.

(e) Limitation on Charges for Data. The Contractor recognizes that the Government or a foreign government with funds derived through the Foreign Assistance Program or otherwise through the United States Government, may contract for property or services with respect to which the vendor may be liable to the Contractor for charges for the use of technical data on account of such a contract. The Contractor further recognizes that it is the policy of the Government not to pay in connection with its contracts, or to allow to be paid in connection with contracts made with funds derived through the Foreign Assistance Program or otherwise through the United States Government, charges for data which the Government has a right to use and disclose to others, which is in the public domain, which the Government has been given without restrictions upon its use and disclosure to others. This policy does not apply to reasonable reproduction, handling, mailing, and similar administrative costs incident to the furnishing of such data. In recognition of this policy, the Contractor agrees to participate in and make appropriate arrangements for the exclusion of such charges from such contracts, or for the refund of amounts received by the Contractor with respect to any such charges not so excluded.

Figure 1

OPS/FM-1B Portable VHF-FM Transceiver

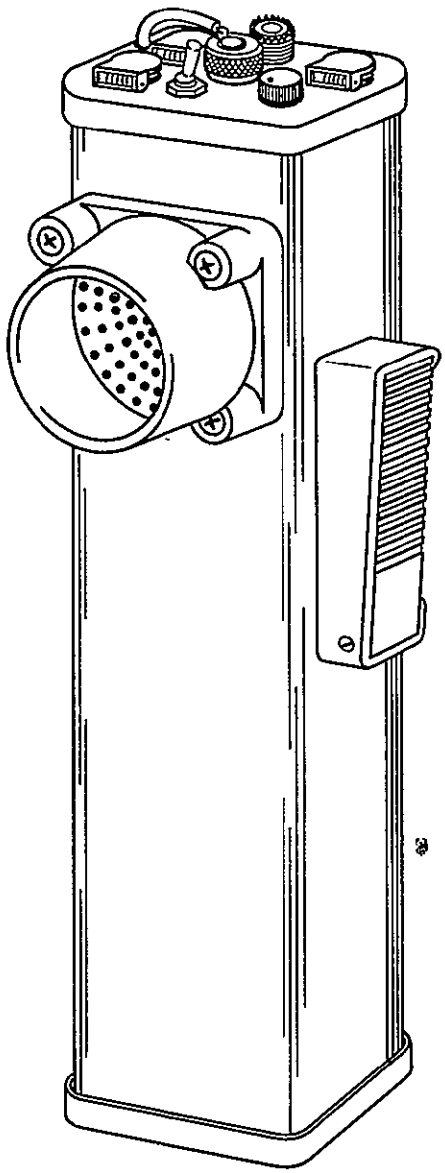

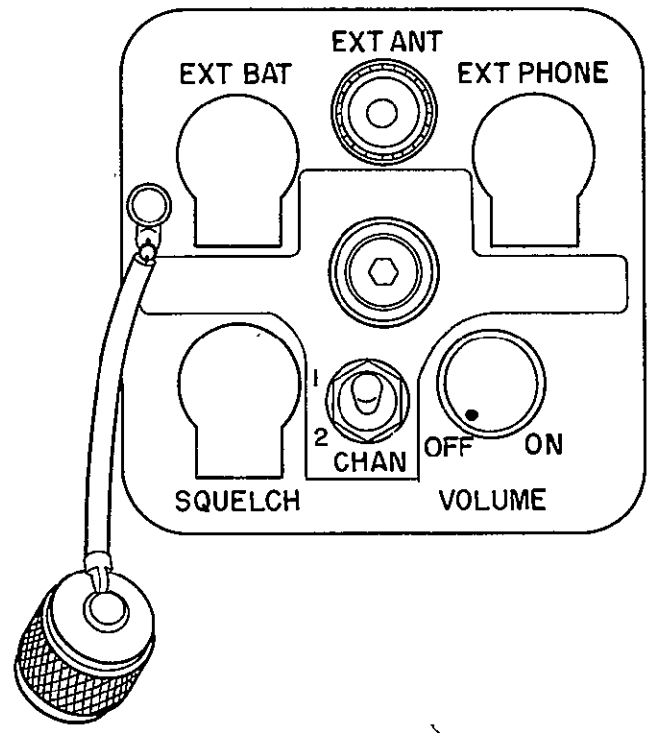

Revised Jan. 18, 1968
OPS/TSD

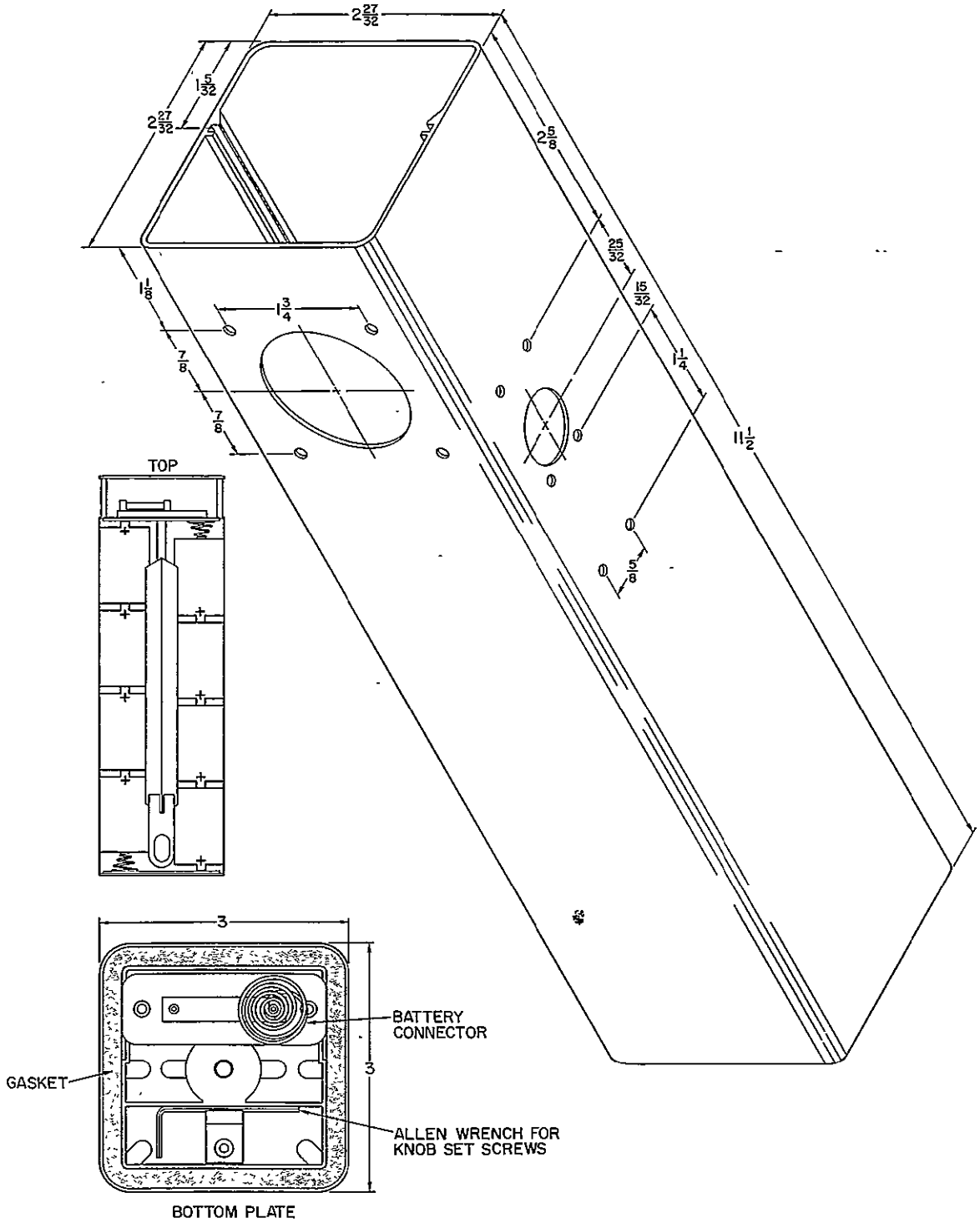

Figure 2

OPS/FM-1B TRANSCEIVER CABINET

Figure 3

OPS/CC-I SHOULDER CARRYING STRAP

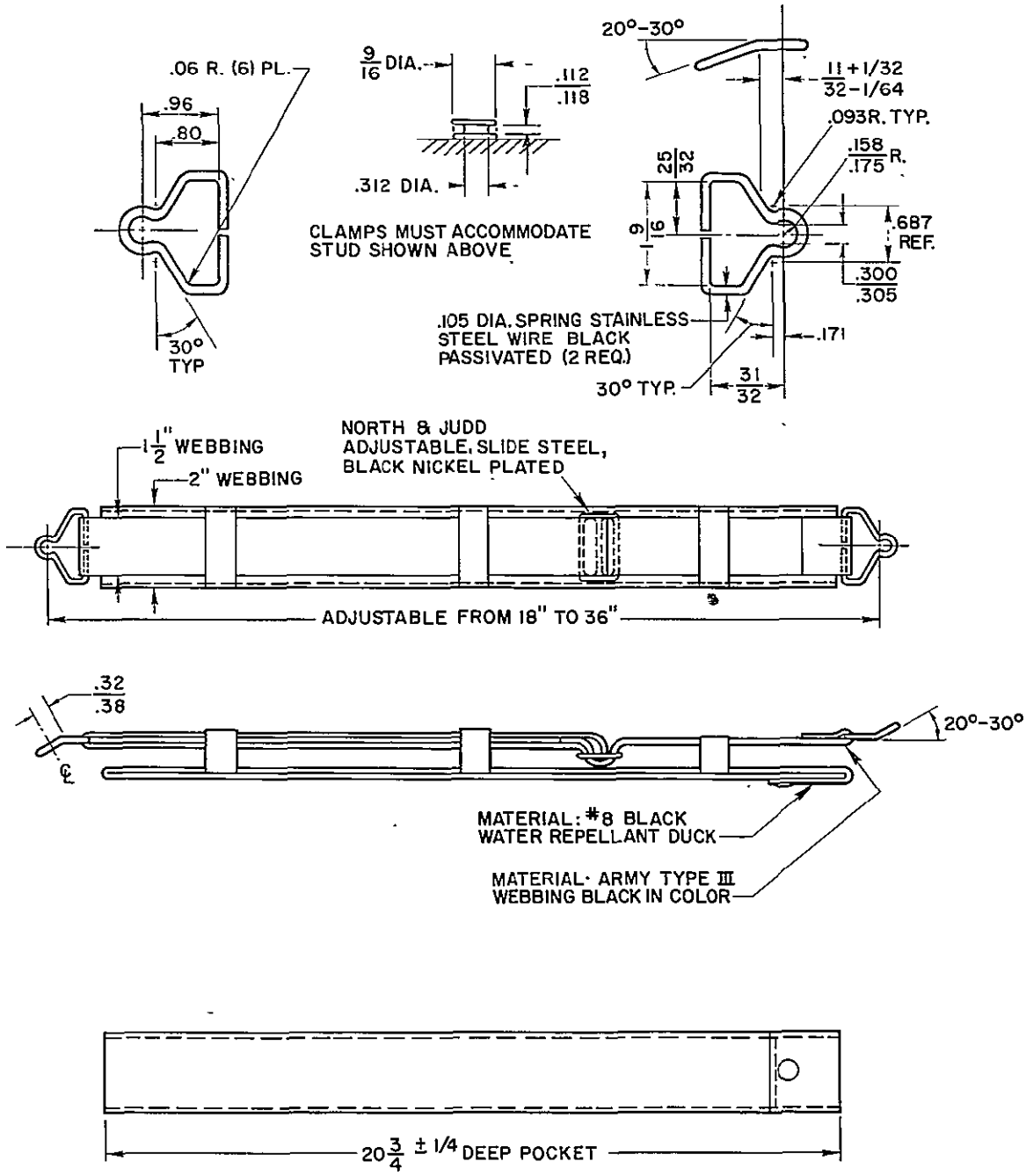

Jan. 10, 1967
OPS/TSD

FIGURE 4

OPS/FM-1B CONTROL HEAD

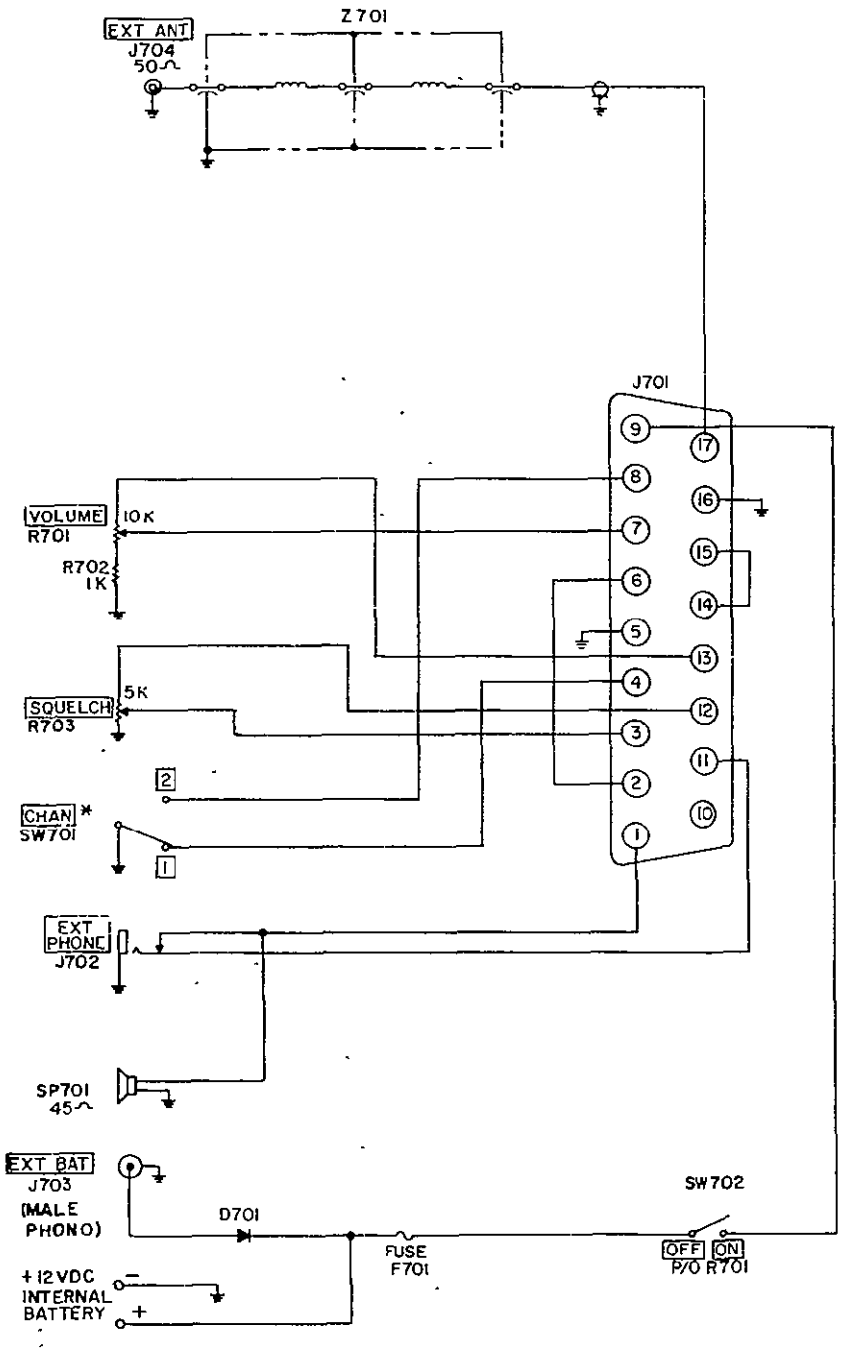

*SW 701 not supplied on single channel units.

Jan. 18, 1968
OPS/TSD

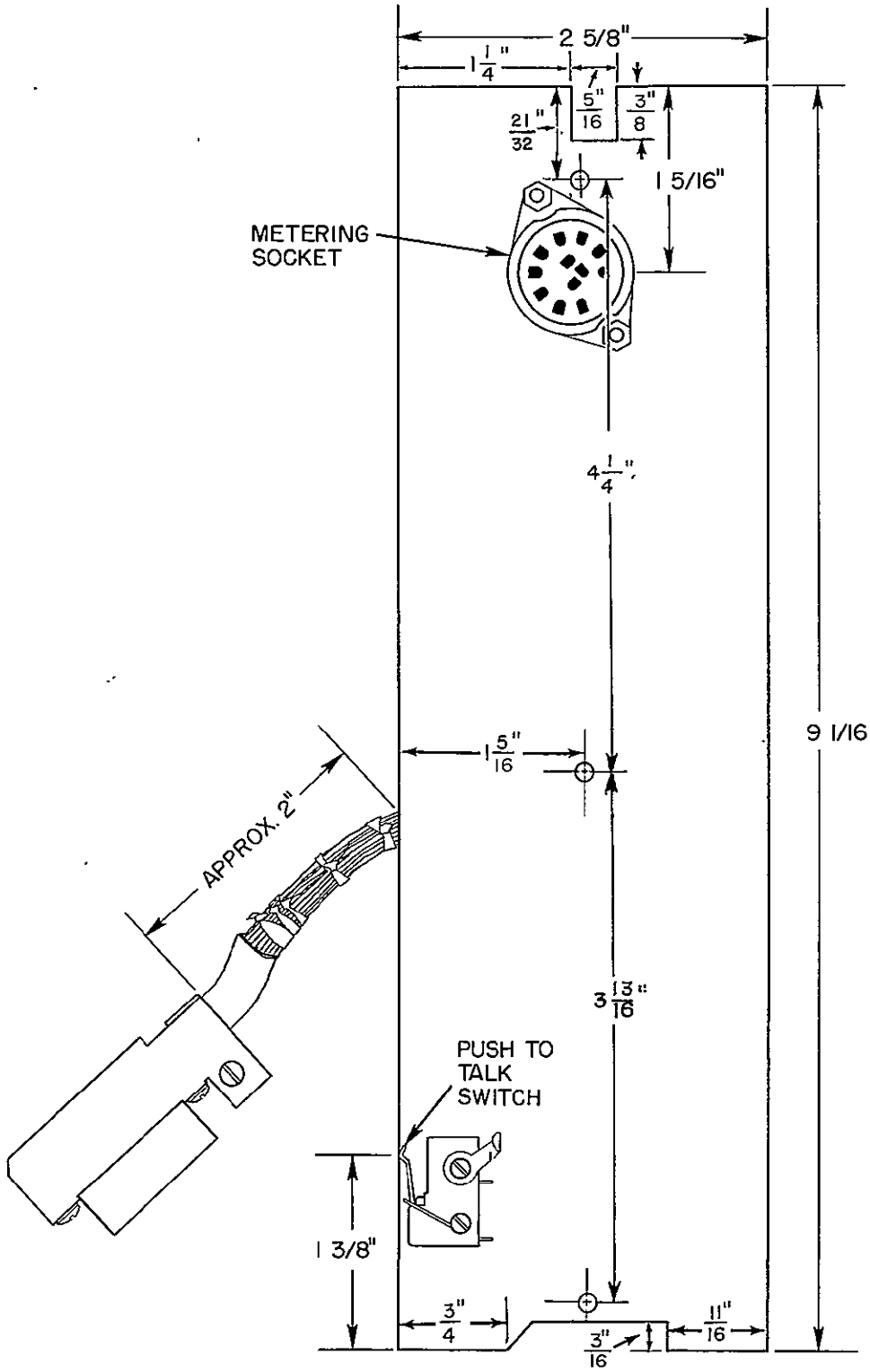

PRINTED CIRCUIT BOARD PC–17

Figure 5

Jan. 18, 1968
OPS/TSD

Figure 6

OPS/FM-5B MAN-PACK VHF-FM TRANSCEIVER

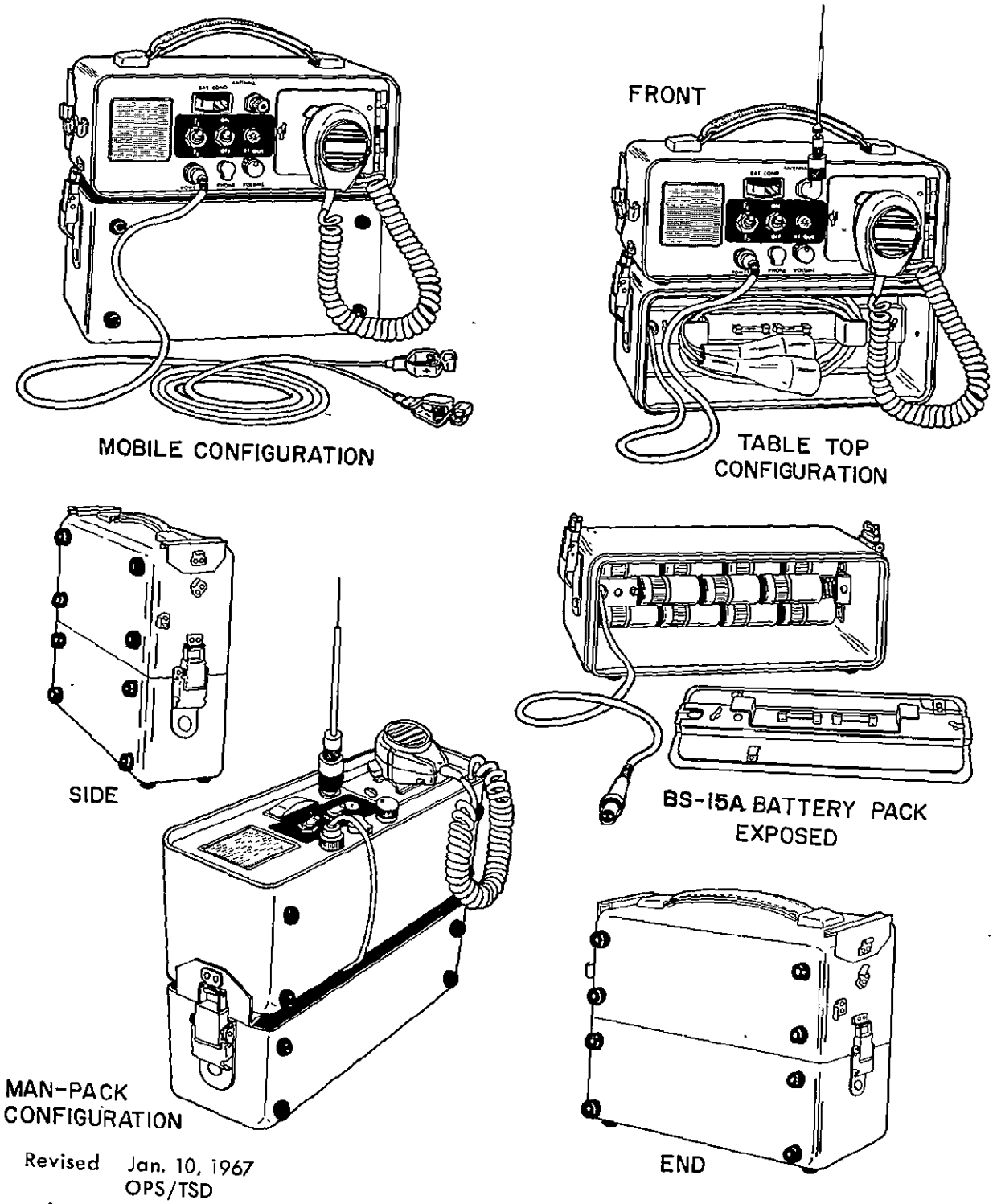

Revised Jan. 10, 1967
OPS/TSD

Figure 7

OPS/FM-5B TRANSCEIVER CABINET WITH BATTERY HOLDER ASSEMBLY OPS/BS-15A

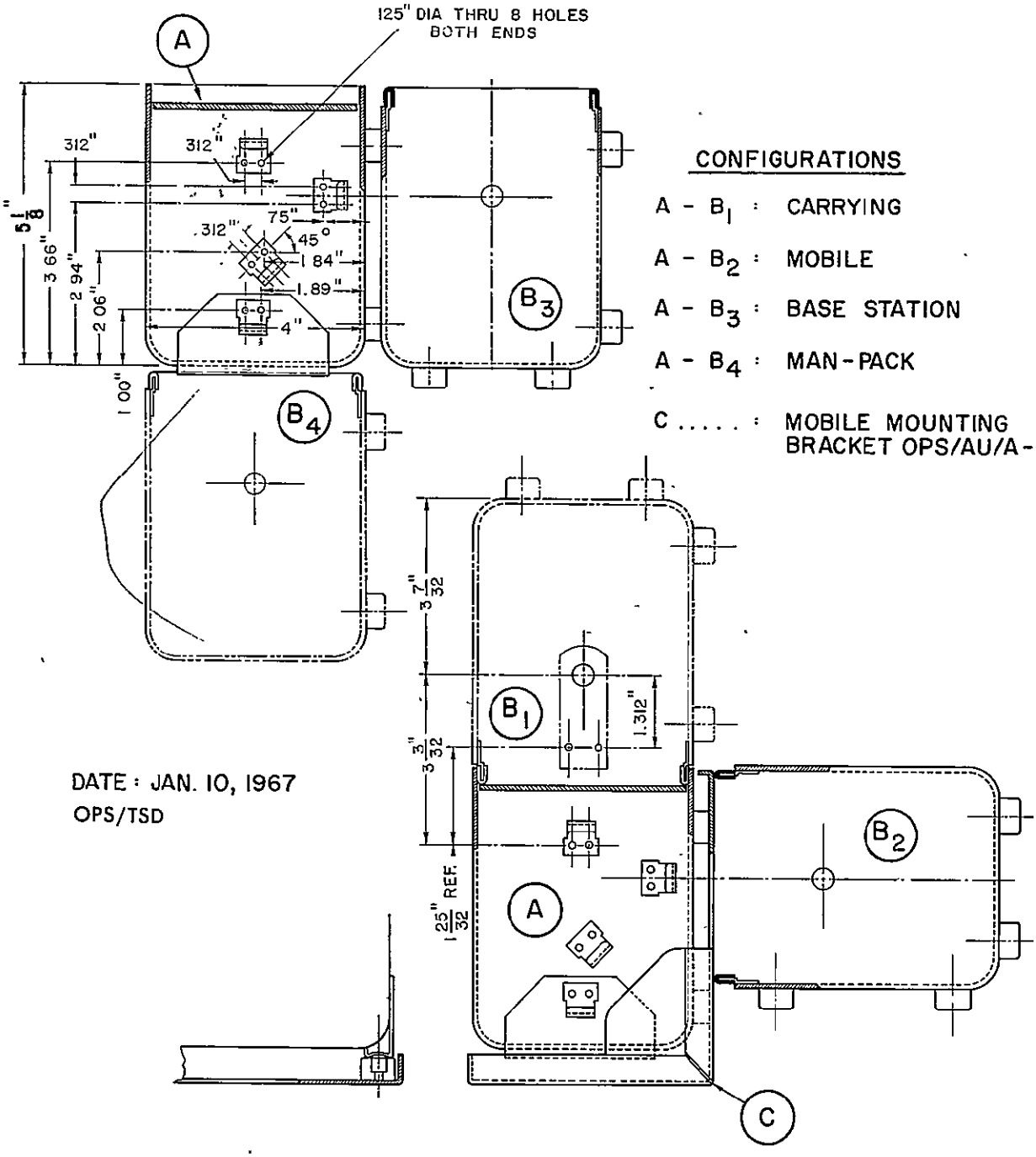

Figure 8

OPS / FM-5B TRANSCEIVER CABINET

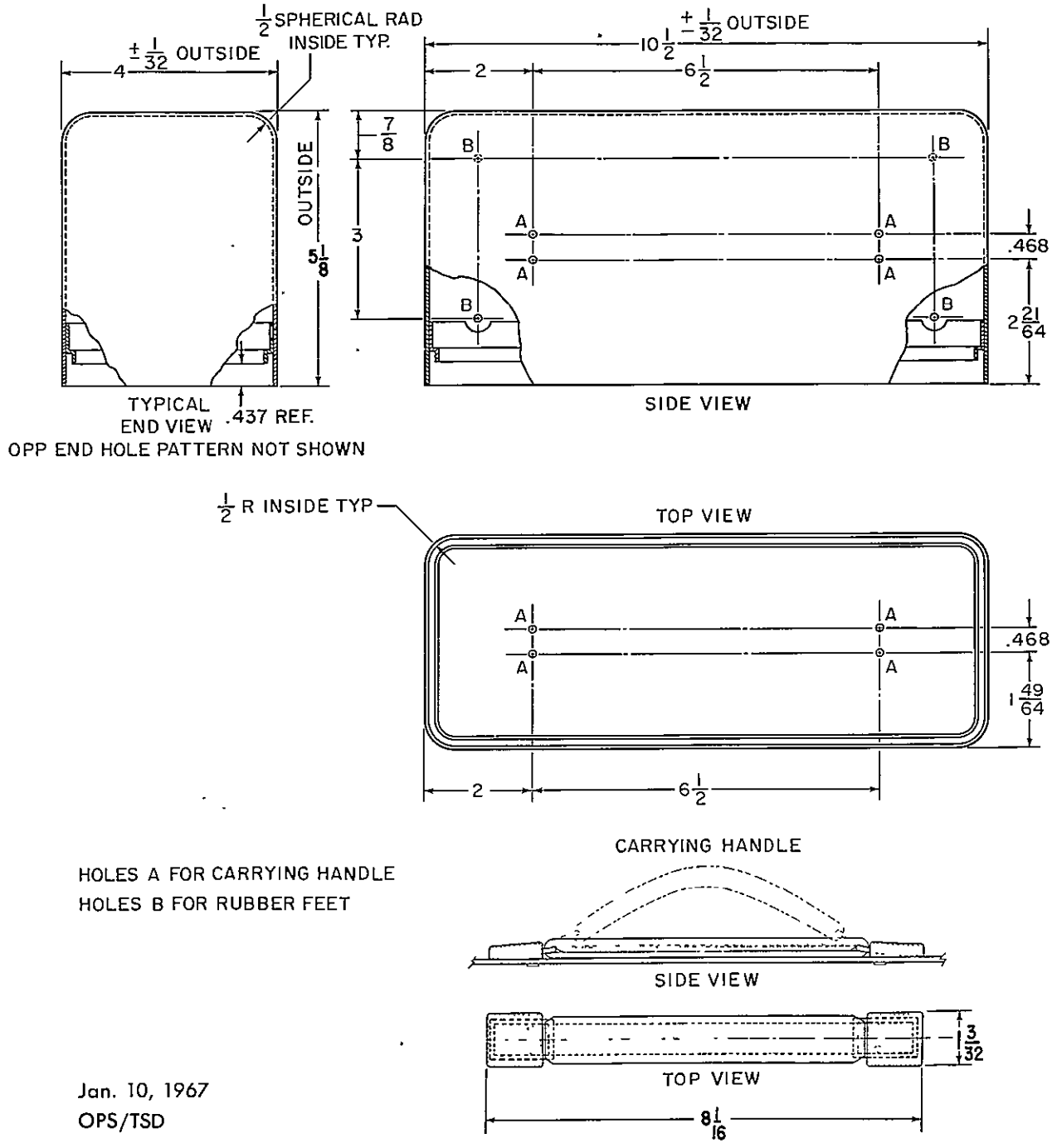

HOLES A FOR CARRYING HANDLE
HOLES B FOR RUBBER FEET

Jan. 10, 1967
OPS/TSD

Figure 9

OPS/BS-15A BATTERY SUB-ASSEMBLY

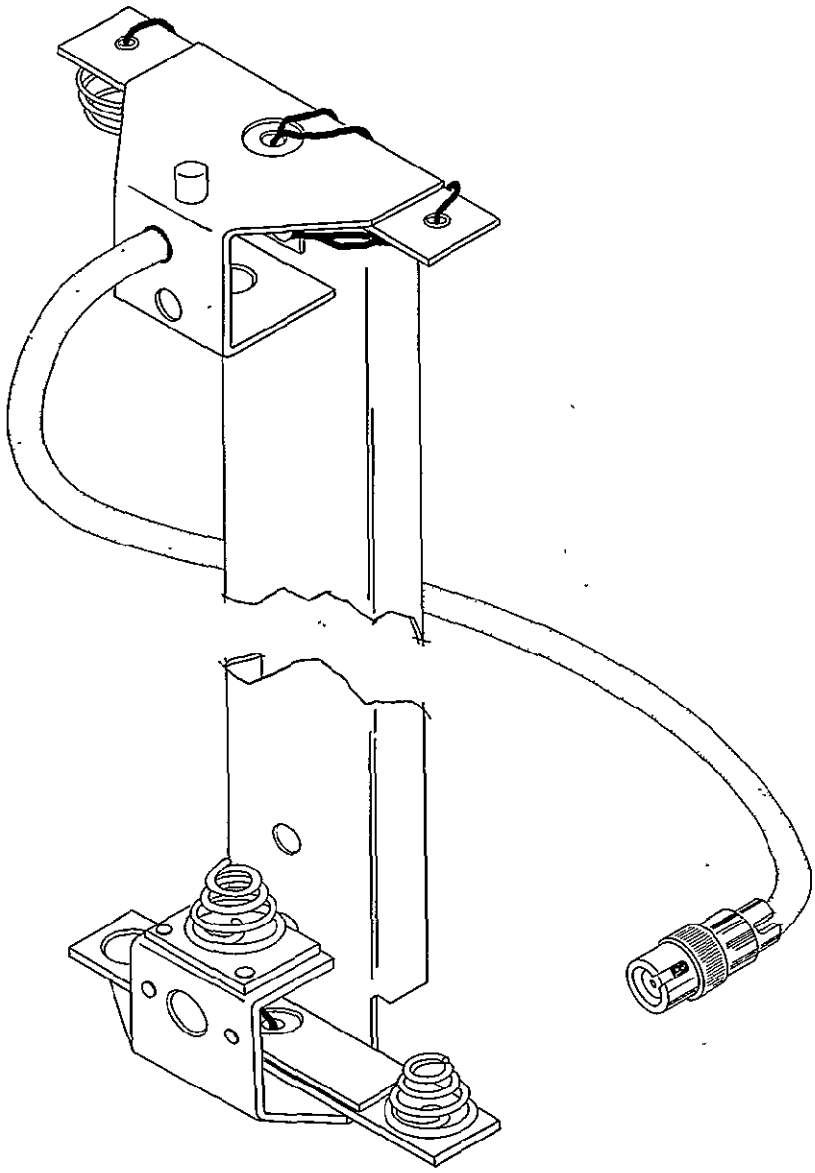

Figure 10

CATCH AND STRIKE DETAILS

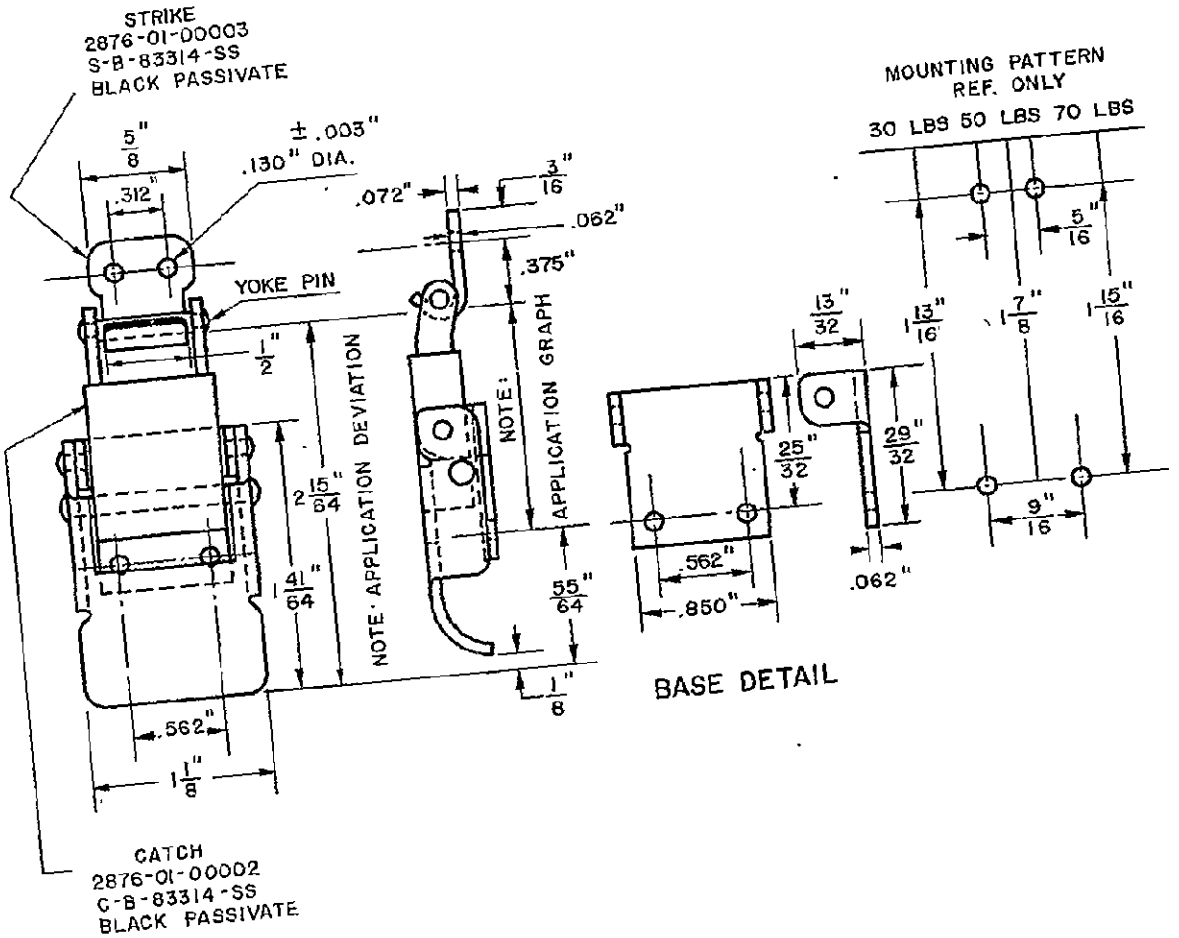

Jan. 10, 1967
OPS/TSD

Figure 11

OPS/AU/A-1 UNIVERSAL MOUNTING BRACKET

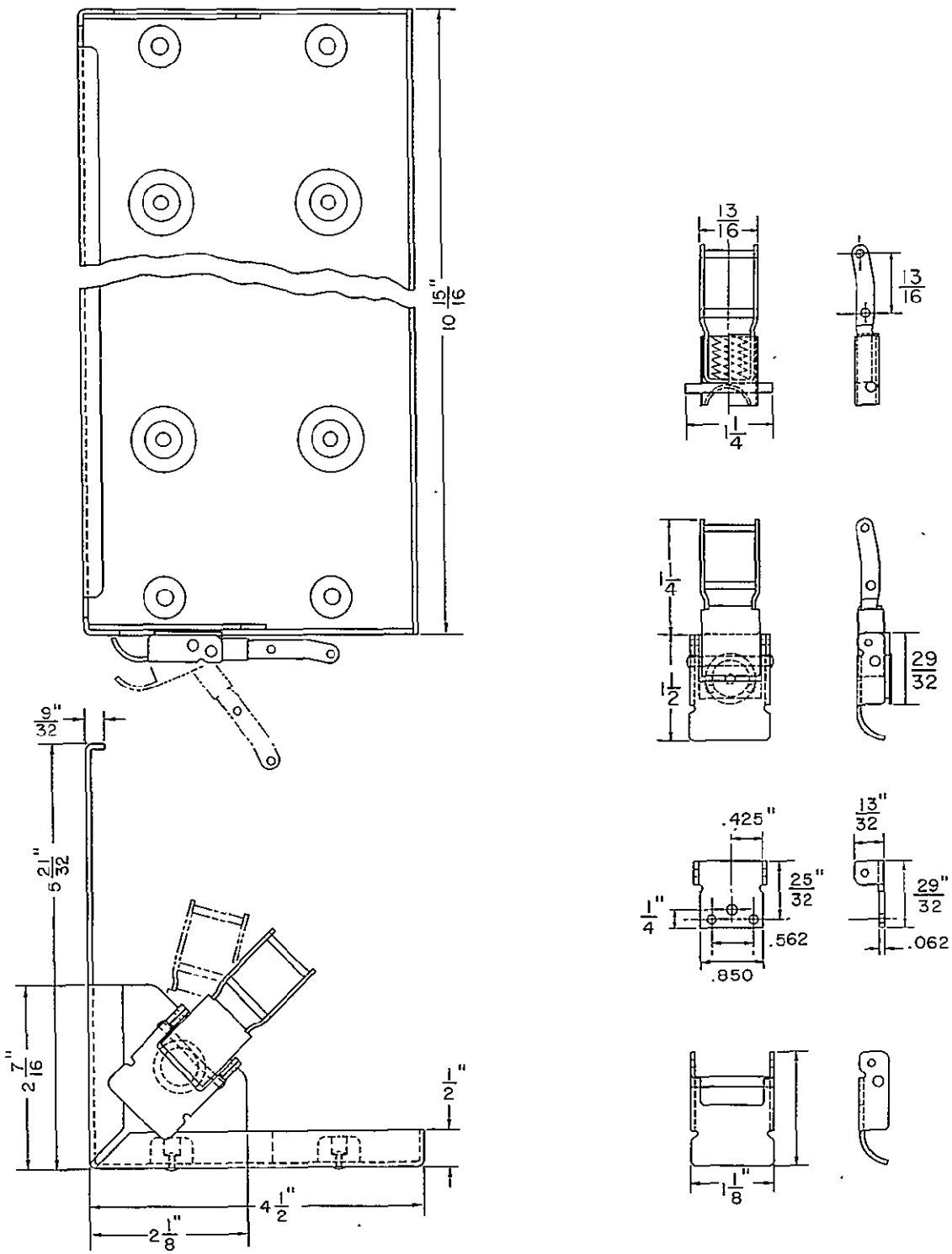

Jan. 10, 1967
OPS/TSD

Figure 12

SCHEMATIC DIAGRAM

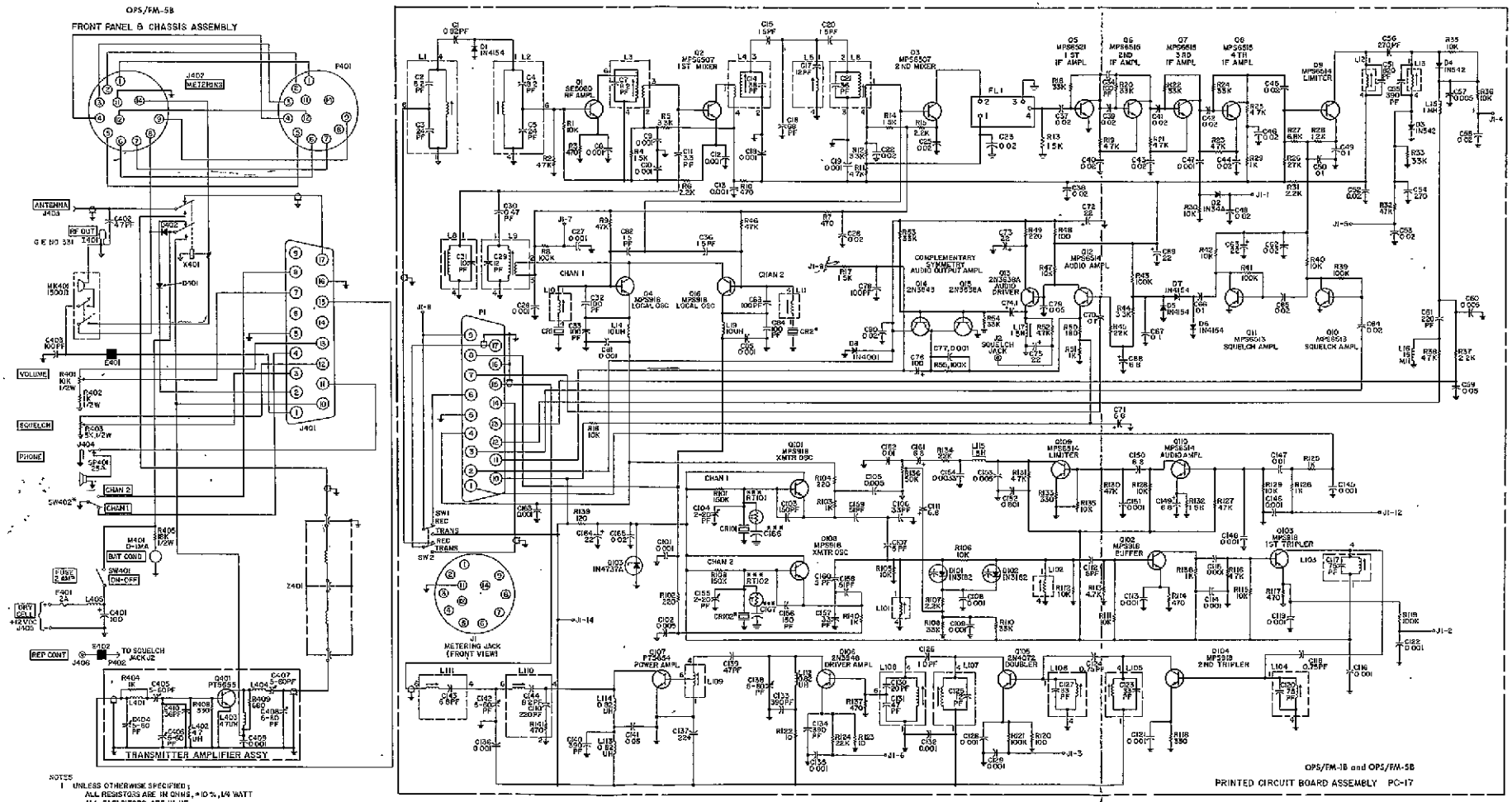

NOTES
1 UNLESS OTHERWISE SPECIFIED:
ALL RESISTORS ARE IN OHMS, ±10%, 1/4 WATT
ALL CAPACITORS ARE IN UF
2 *SW402, CR2, RT102, C167 AND CR102 NOT SUPPLIED ON SINGLE CHANNEL UNITS
3 ** Q14 AND Q15 MUST BE REPLACED AS A MATCHED PAIR.
4 *** RT101, RT102, C166 AND C167 USED ON NARROW BAND UNITS ONLY
C166 AND C167 ARE FACTORY SELECTED

Figure 13

OPS/PS/A-16 AC POWER SUPPLY

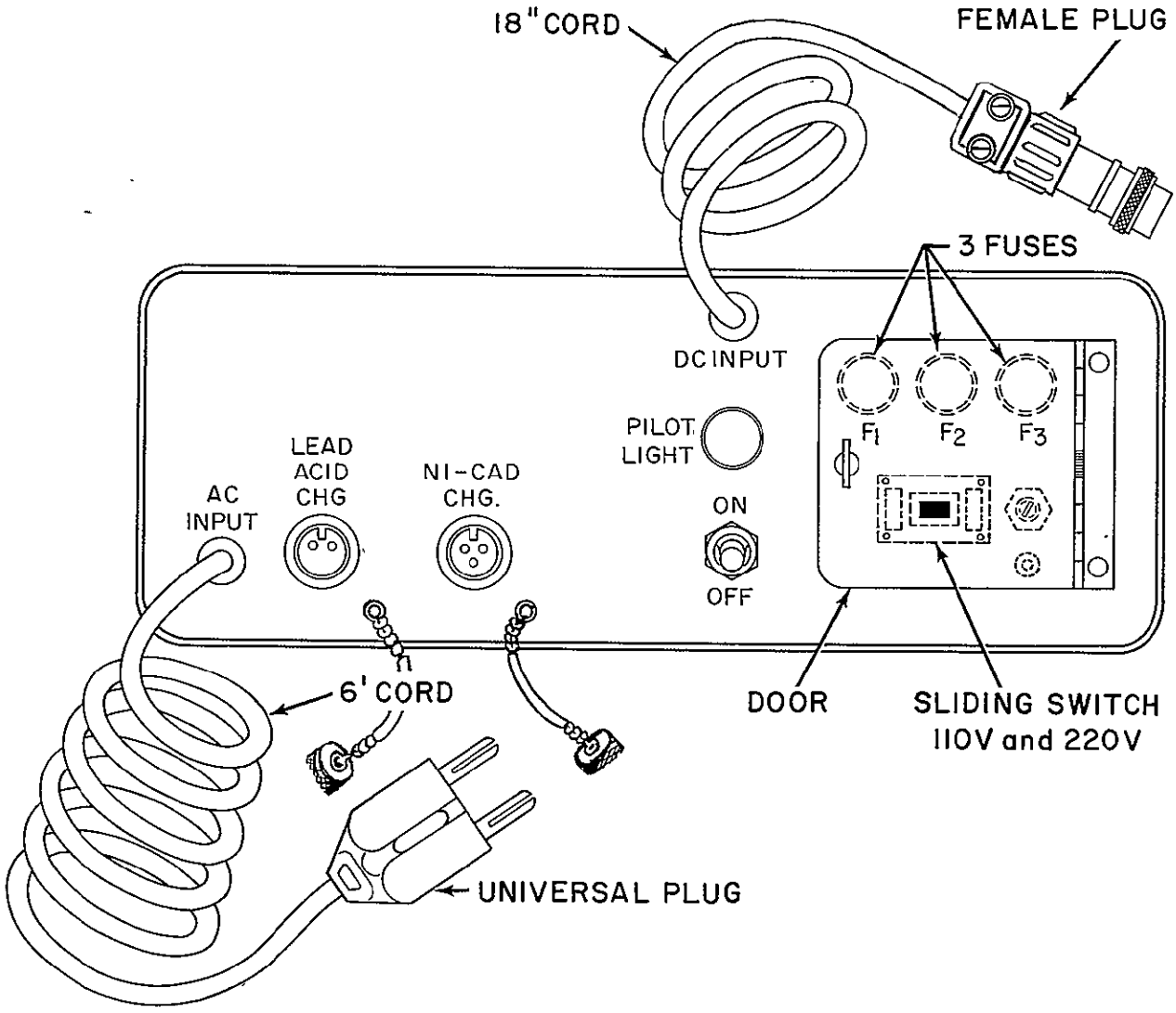

Jan. 10, 1967
OPS/TSD

Figure 14

OPS/CT-5 UNIVERSAL AC PLUG

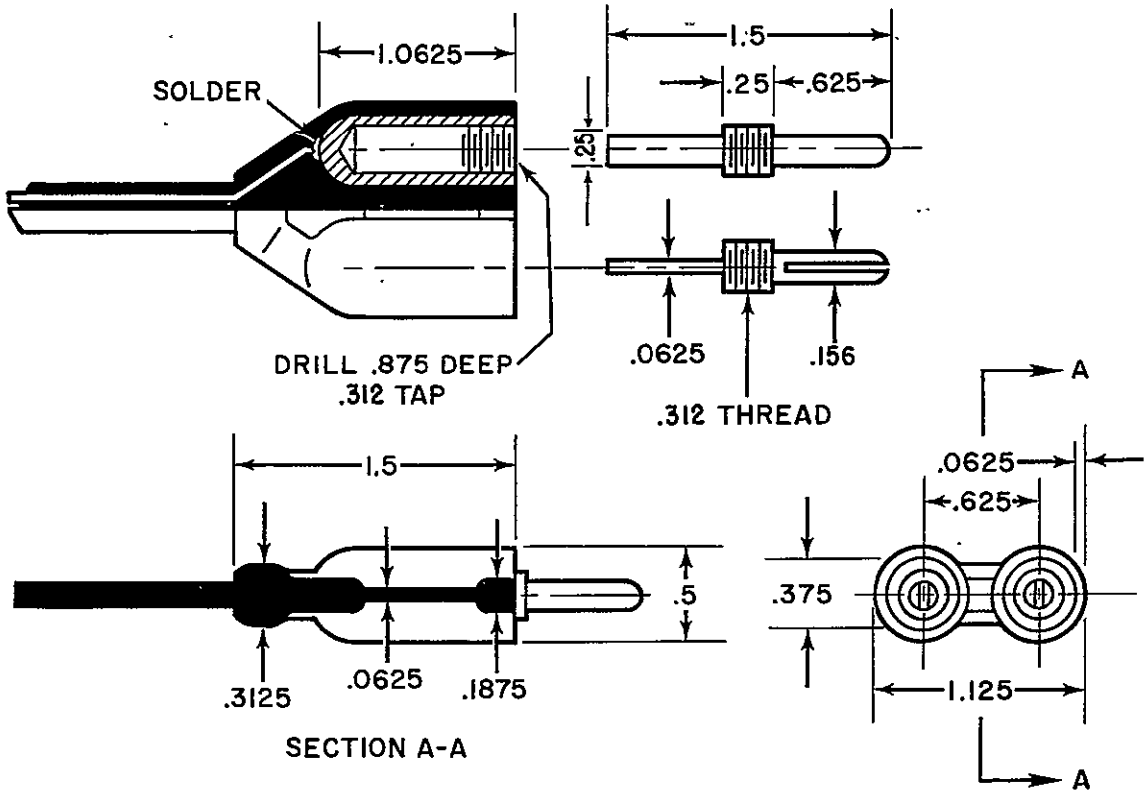

Jan. 10, 1967
OPS/TSD

Figure 15

OPS/PS/A - 16 Schematic Diagram

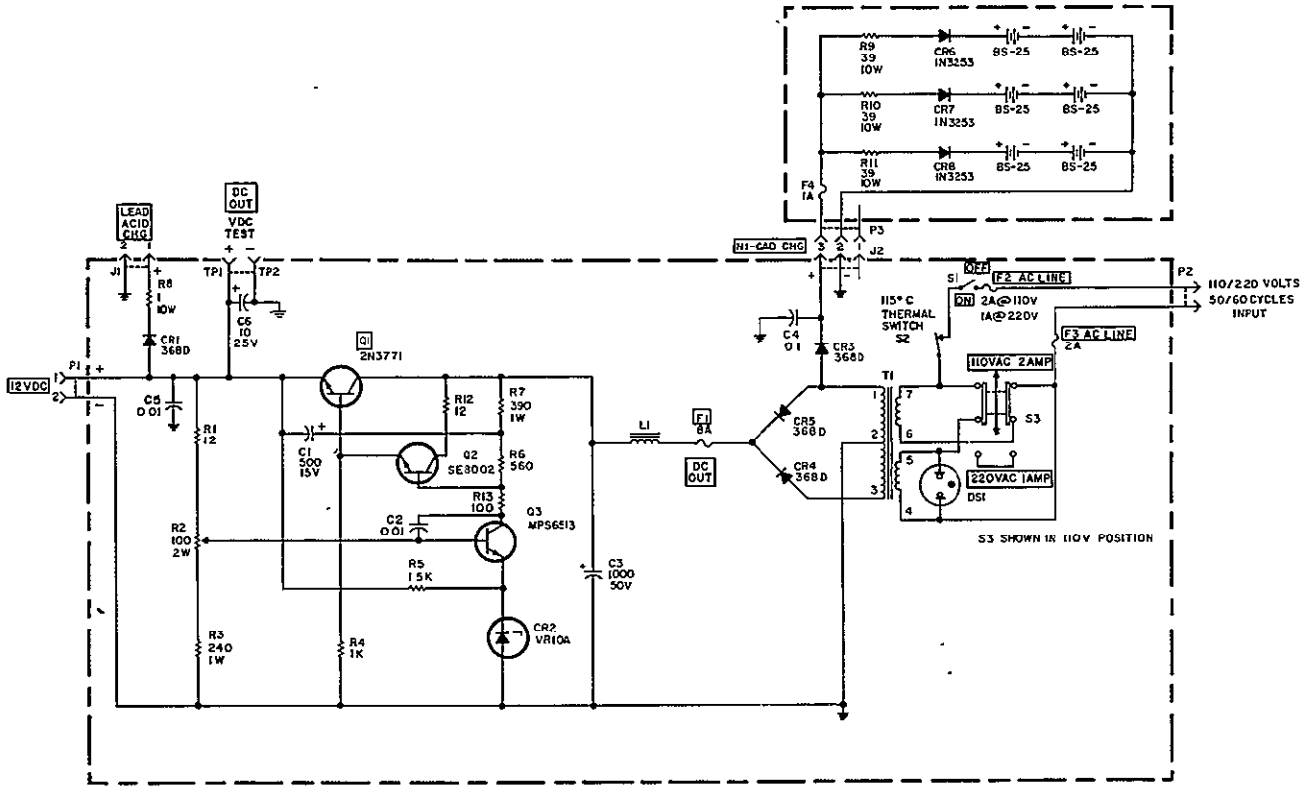

NOTES:
1 UNLESS OTHERWISE SPECIFIED,
ALL RESISTORS ARE IN OHMS ±10% 1/2WATT
ALL CAPACITORS ARE IN UF
2 ⏚ DENOTES CHASSIS GROUND

JAN. 18, 1968
OPS /TSD

Figure 16

OPS/PA-20 20 WATT RF POWER AMPLIFIER

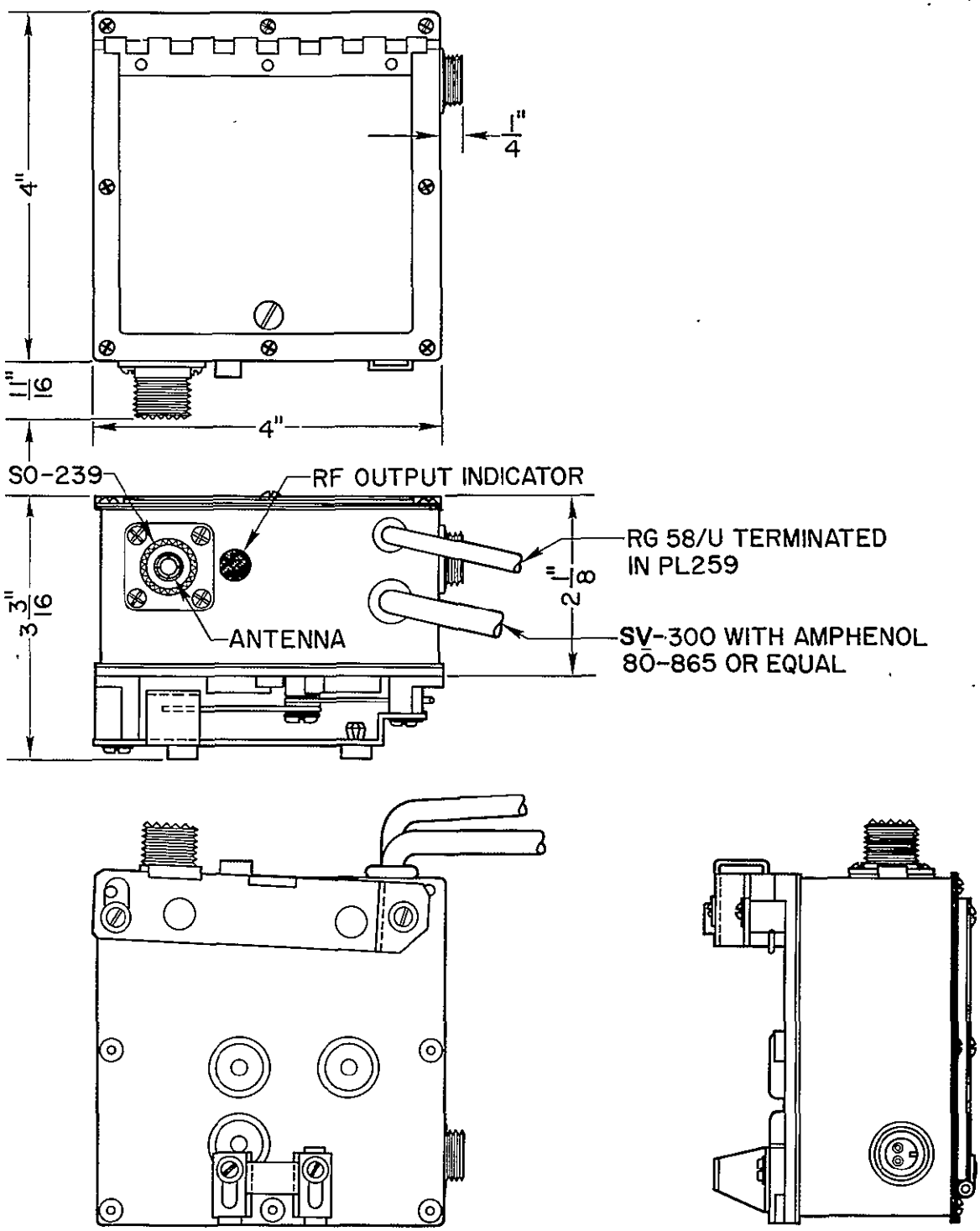

Jan. 10, 1967
OPS/TSD

FIGURE 17

OPS/PA-20 SCHEMATIC DIAGRAM

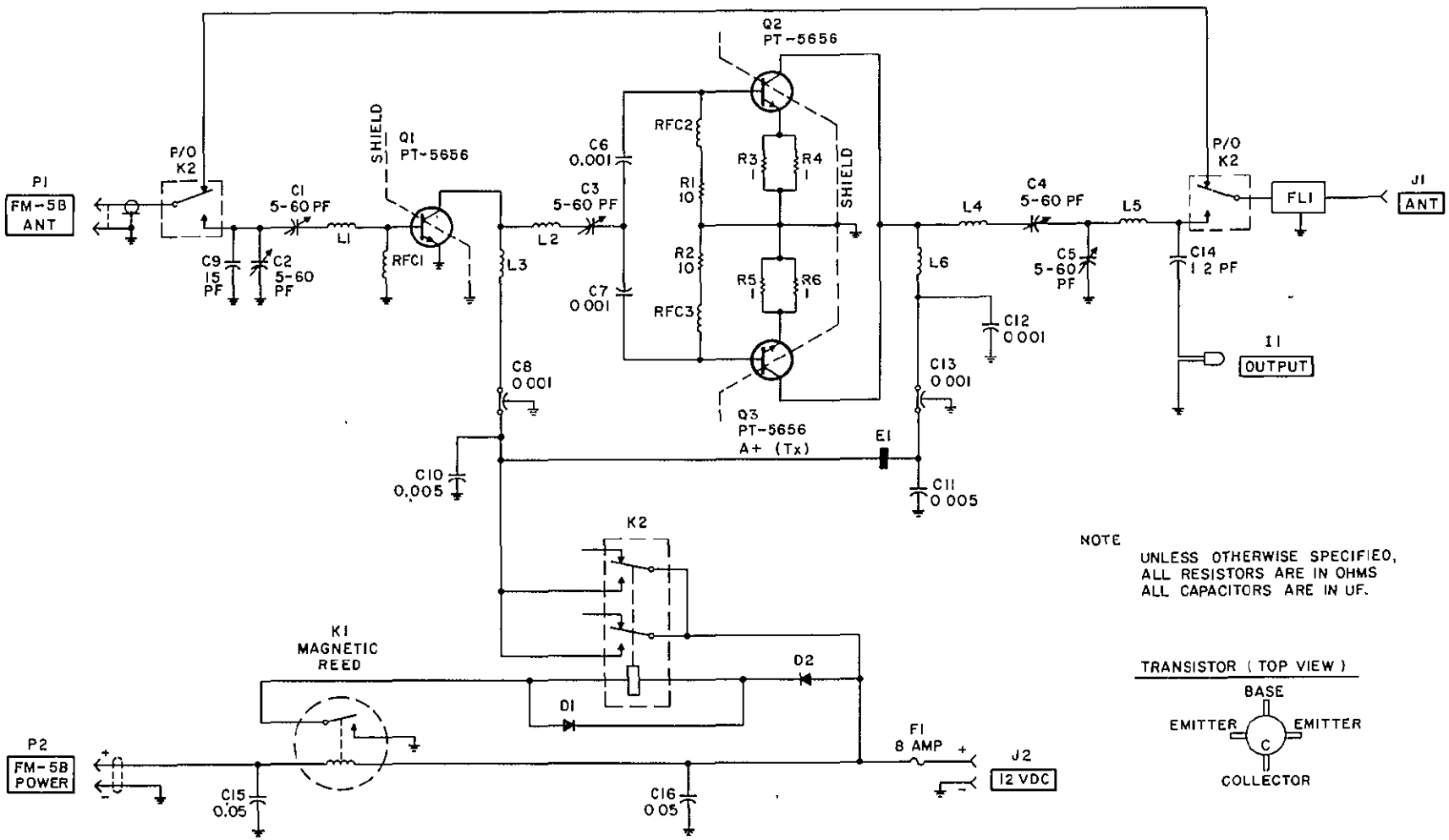

Jan. 18, 1968
OPS/TSD

Figure 18

OPS/RU-5A BACK-TO-BACK REPEATER

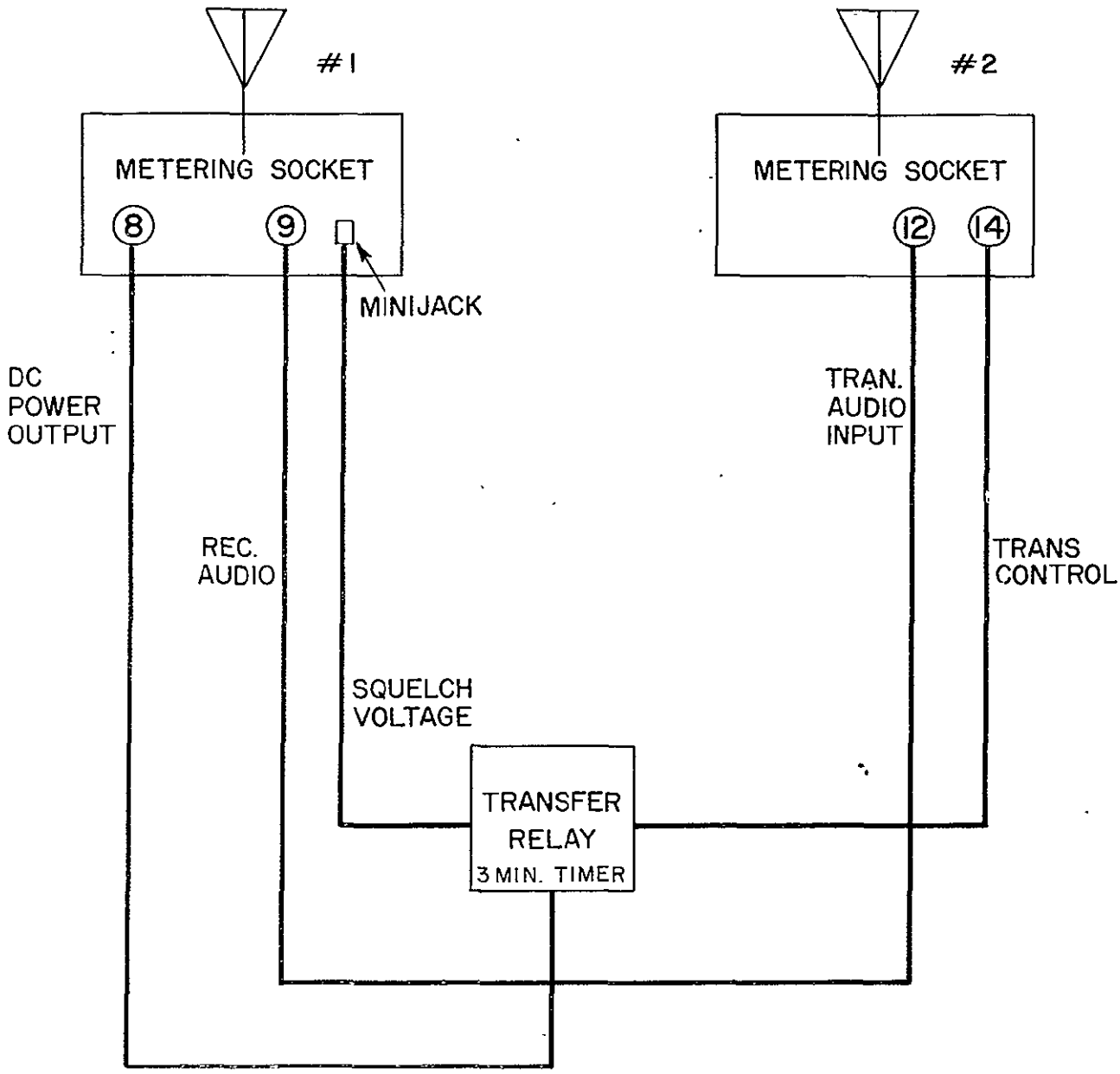

Revised Jan. 10, 1967
OPS/TSD

Figure 19

OPS/RU-6A BACK-TO-BACK REPEATER

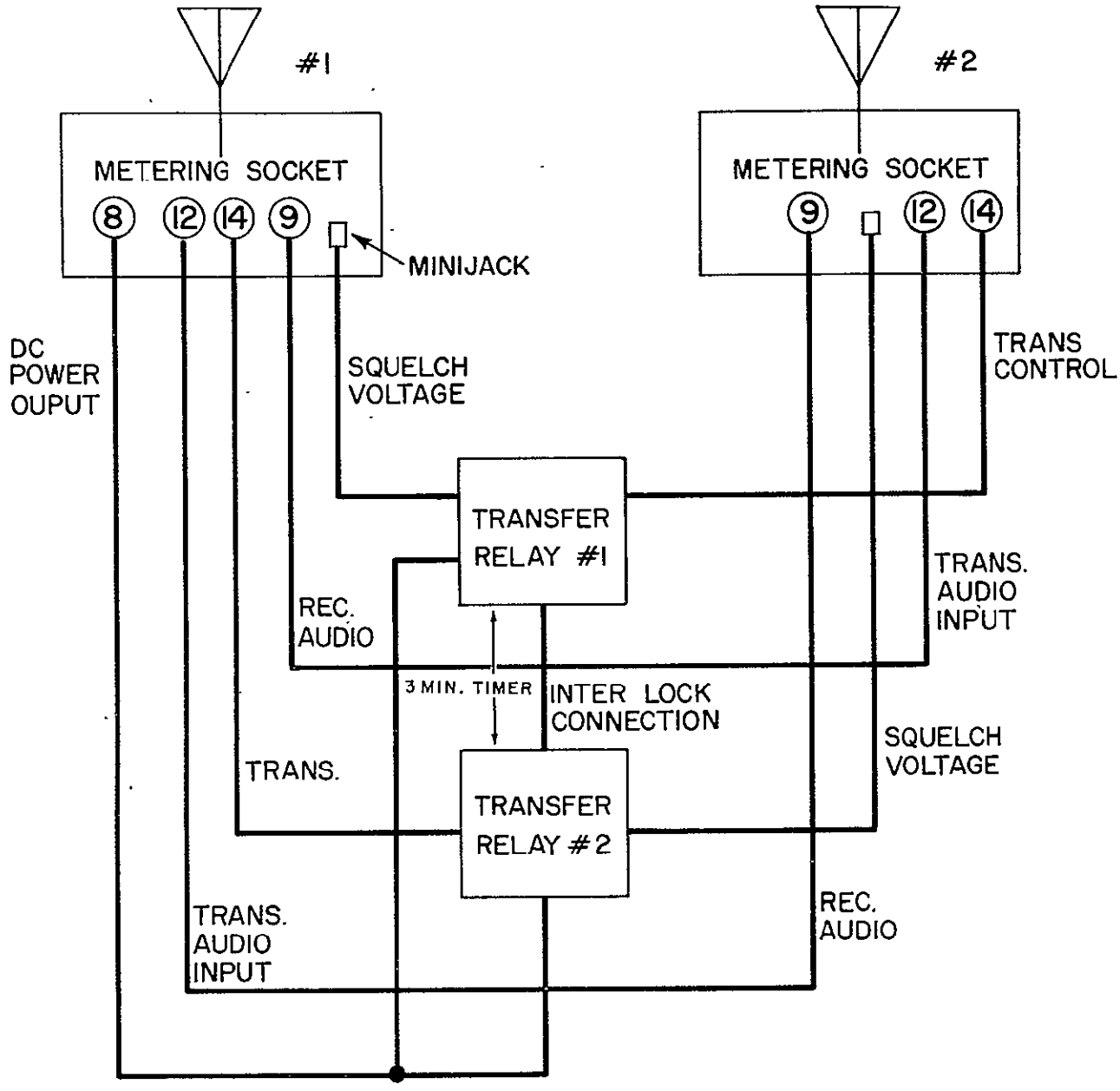

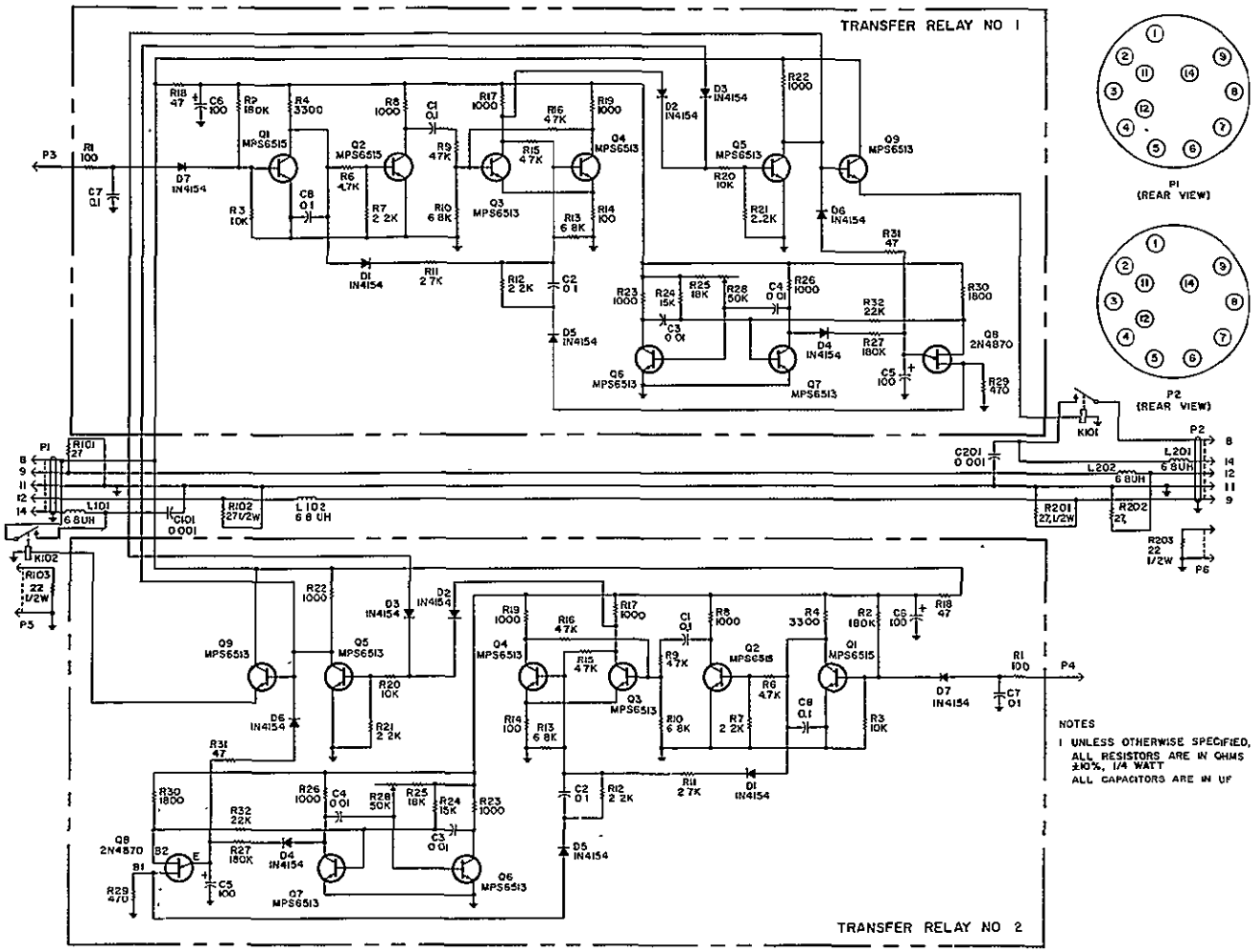

Figure 20

OPS/RU - 6A Schematic Diagram

JAN. 18, 1968

OPS/TSD

Figure 21

OPS/KA-8A TELEGRAPH (MCW) MODULE

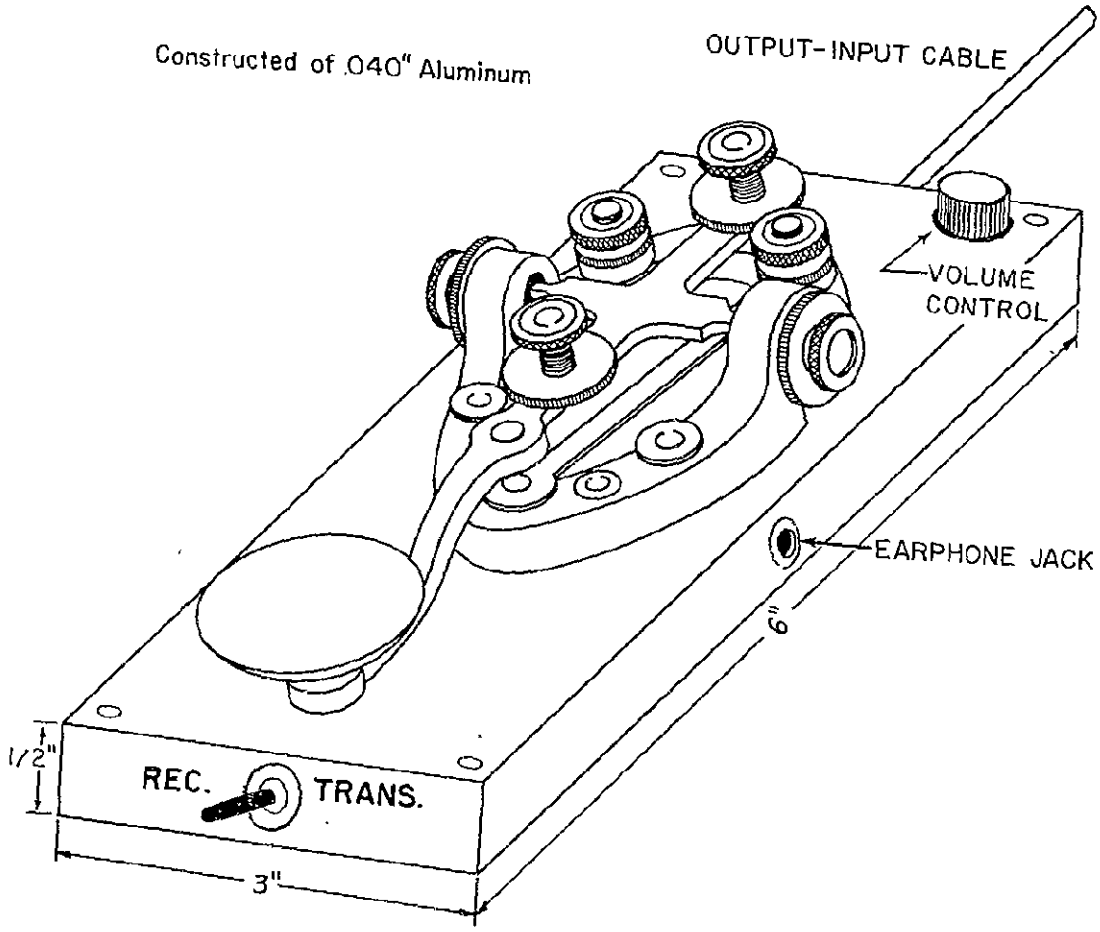

Revised Jan. 10, 1967
OPS/TSD

Figure 22

OPS/KA - 8A Schematic Diagram

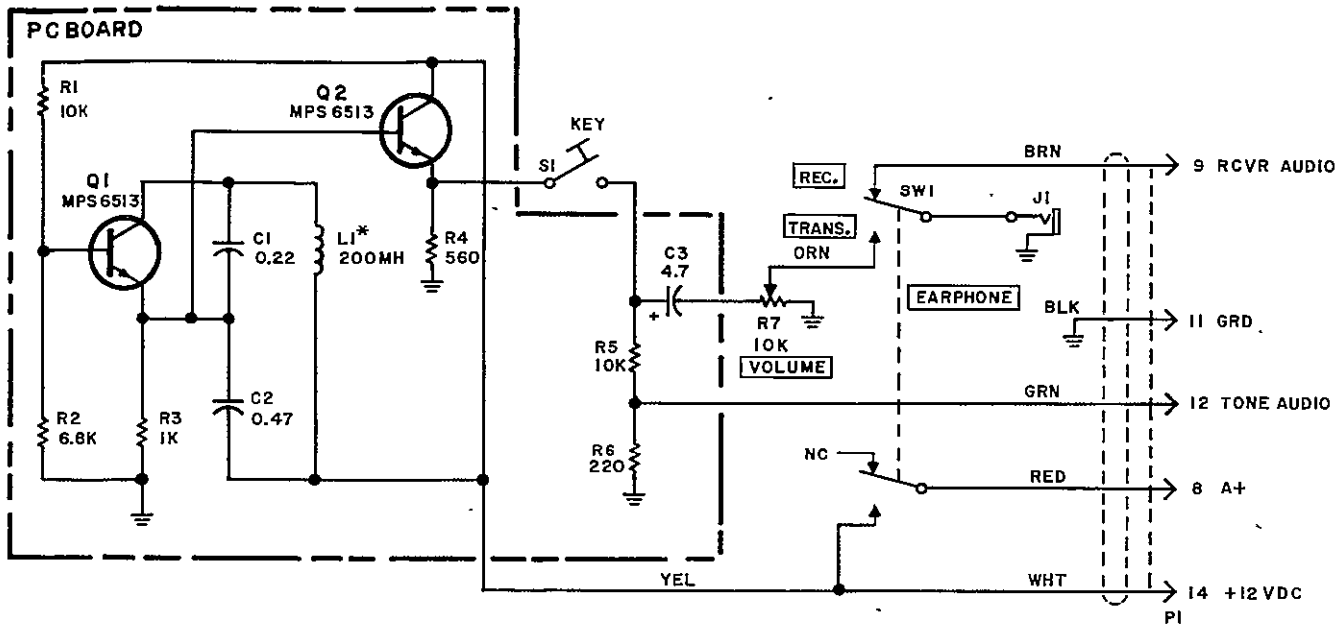

NOTE:

1. UNLESS OTHERWISE SPECIFIED,
   ALL RESISTORS ARE IN OHMS, ±10 %, 1/4 WATT.
   ALL CAPACITORS ARE IN UF.
2. * COIL L1 IS NOT PHYSICALLY LOCATED ON PC BOARD.

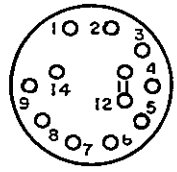

PLUG (PIN VIEW)

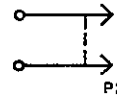

P2
(MUTING PLUG)

JAN. 18, 1968
OPS/TSD

Figure 23

OPS/OS-25 SCHEMATIC DIAGRAM

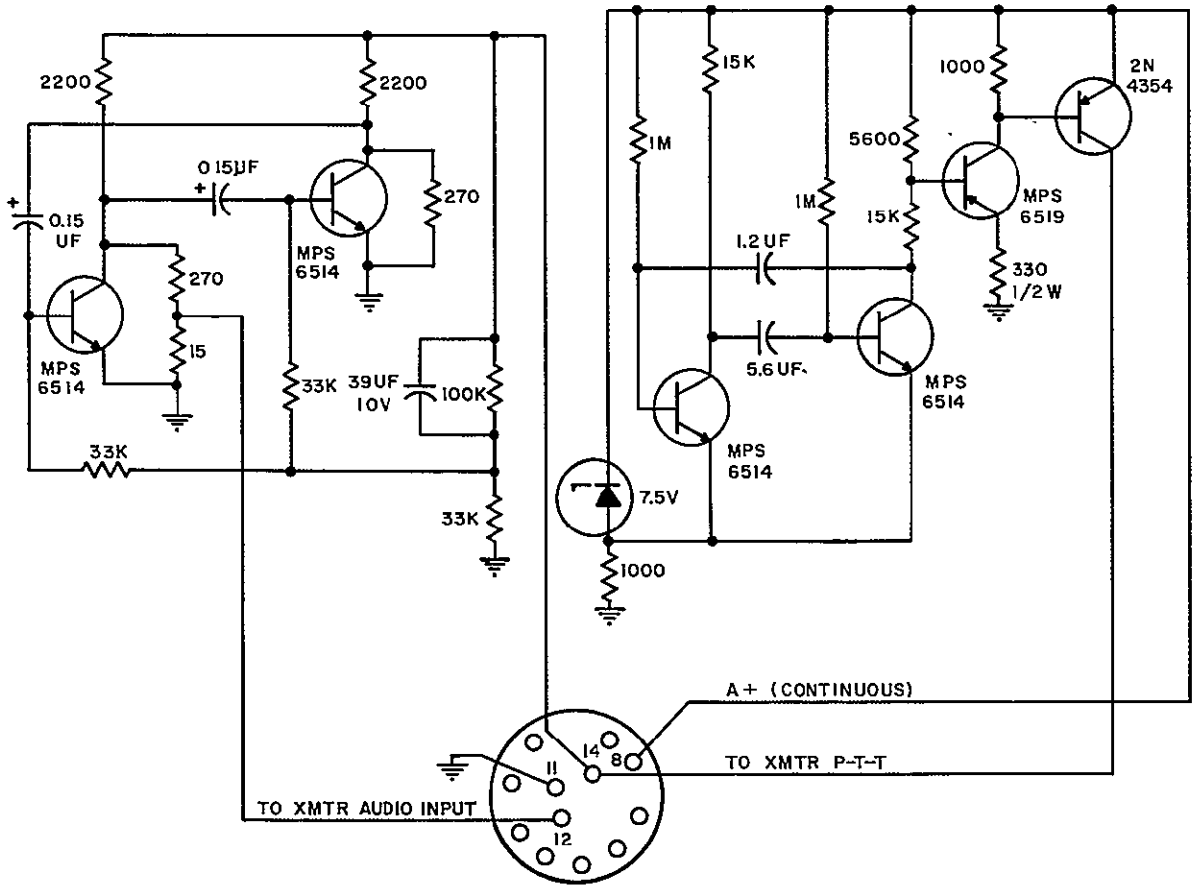

JAN. 18, 1968

OPS/TSD

Figure 24

OPS/TS-20 TEST SET

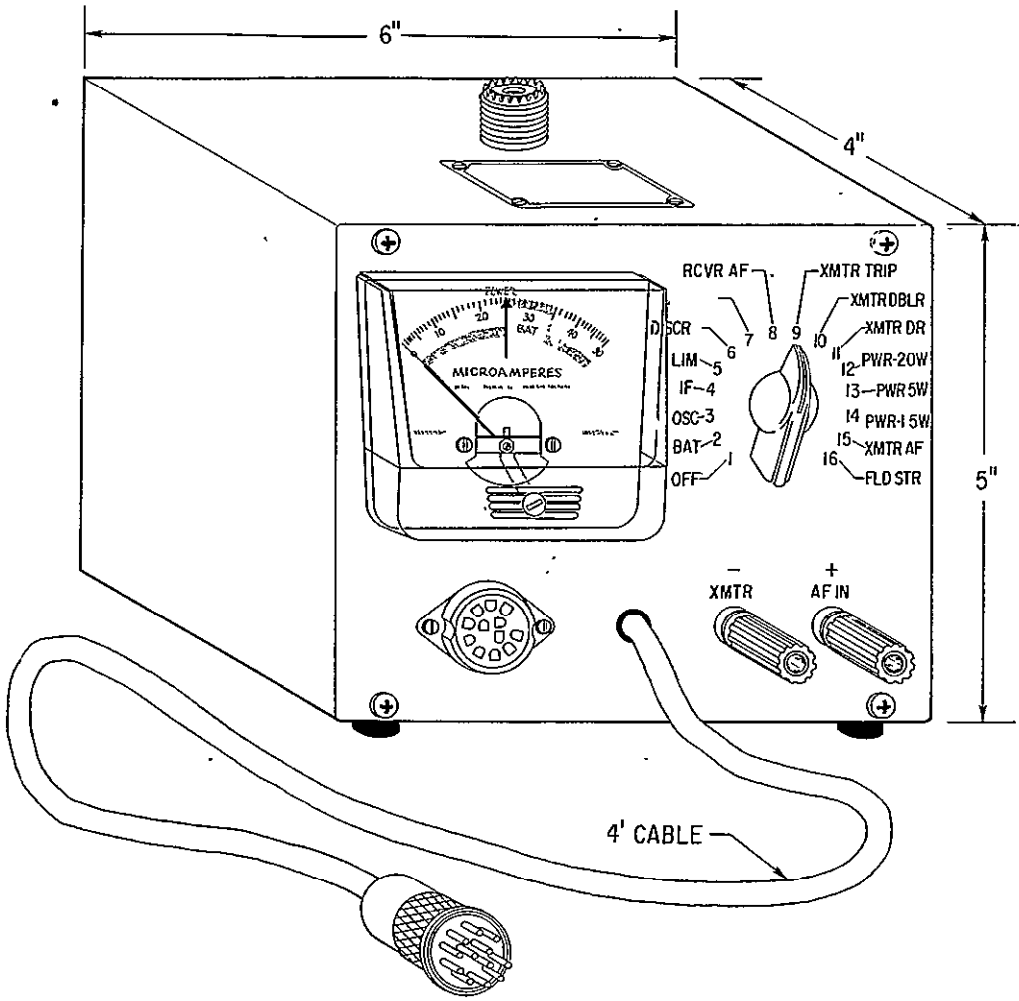

JAN. 18, 1968
OPS/TSD

Figure 25

OPS/AE-4 ANTENNA BASE AND AE-I ELEMENT

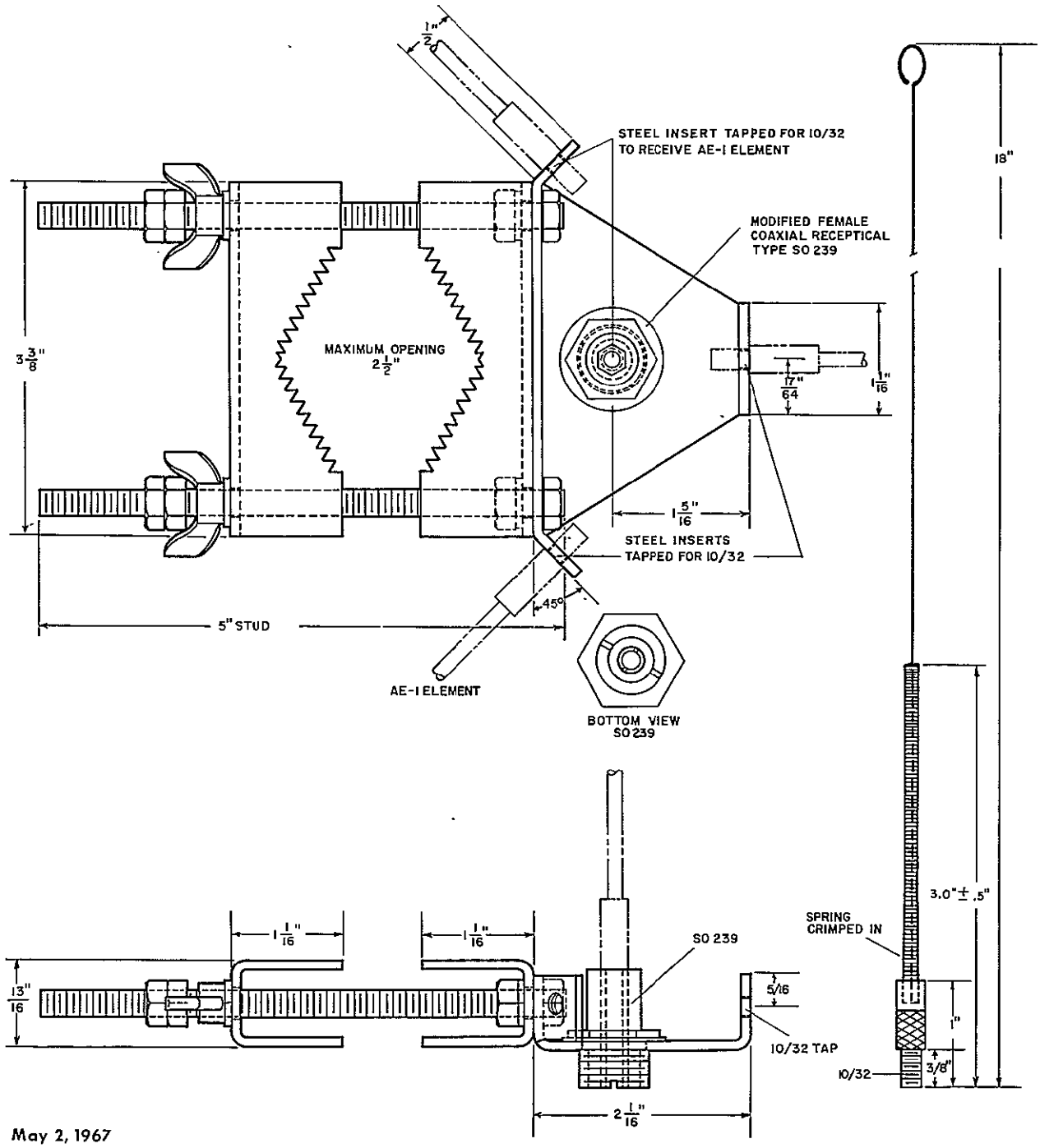

May 2, 1967
OPS/TSD

FIGURE 26

OPS/AE-10 HIGH GAIN TACTICAL ANTENNA

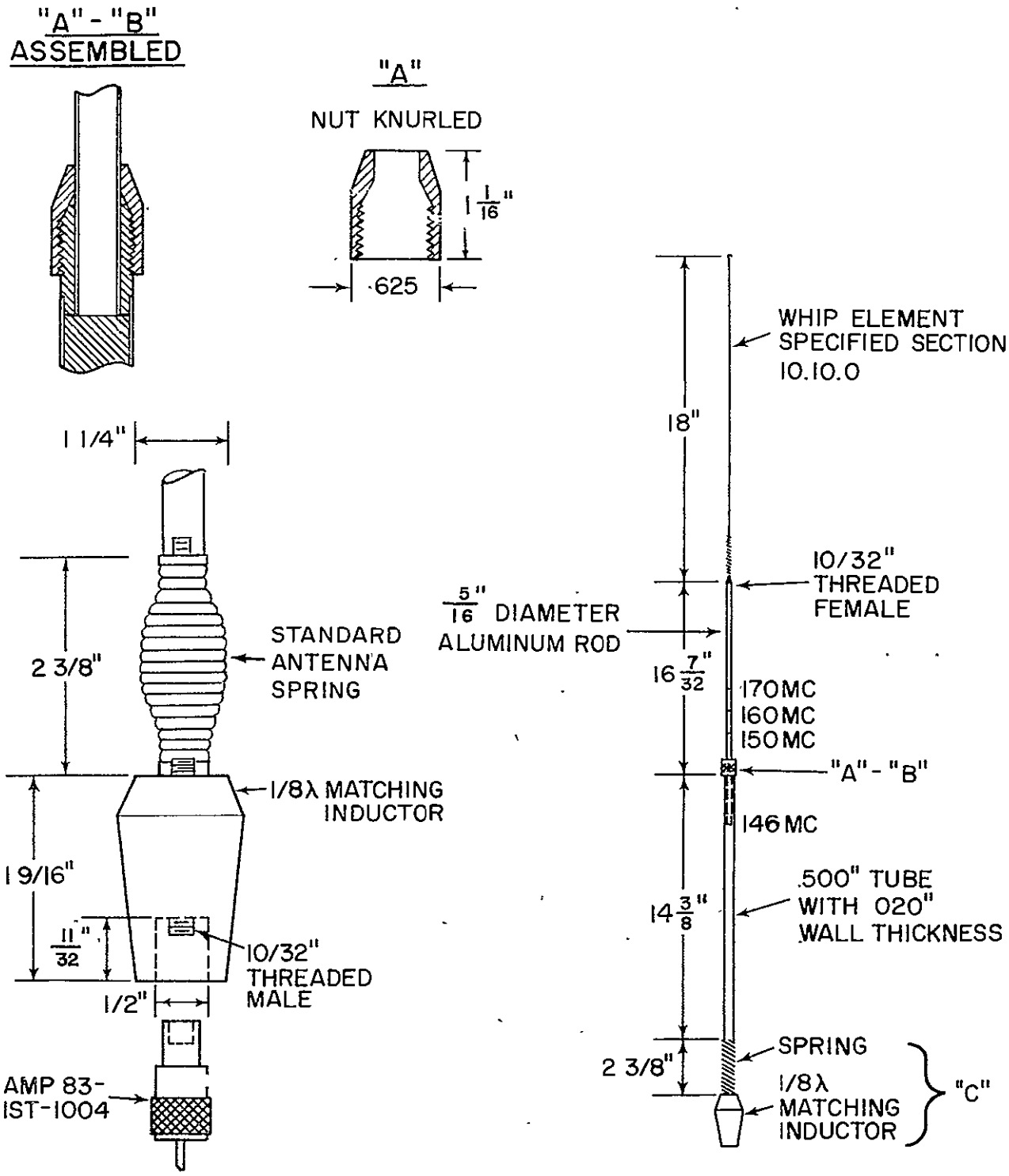

Revised Jan. 18, 1968
OPS/TSD

Figure 27
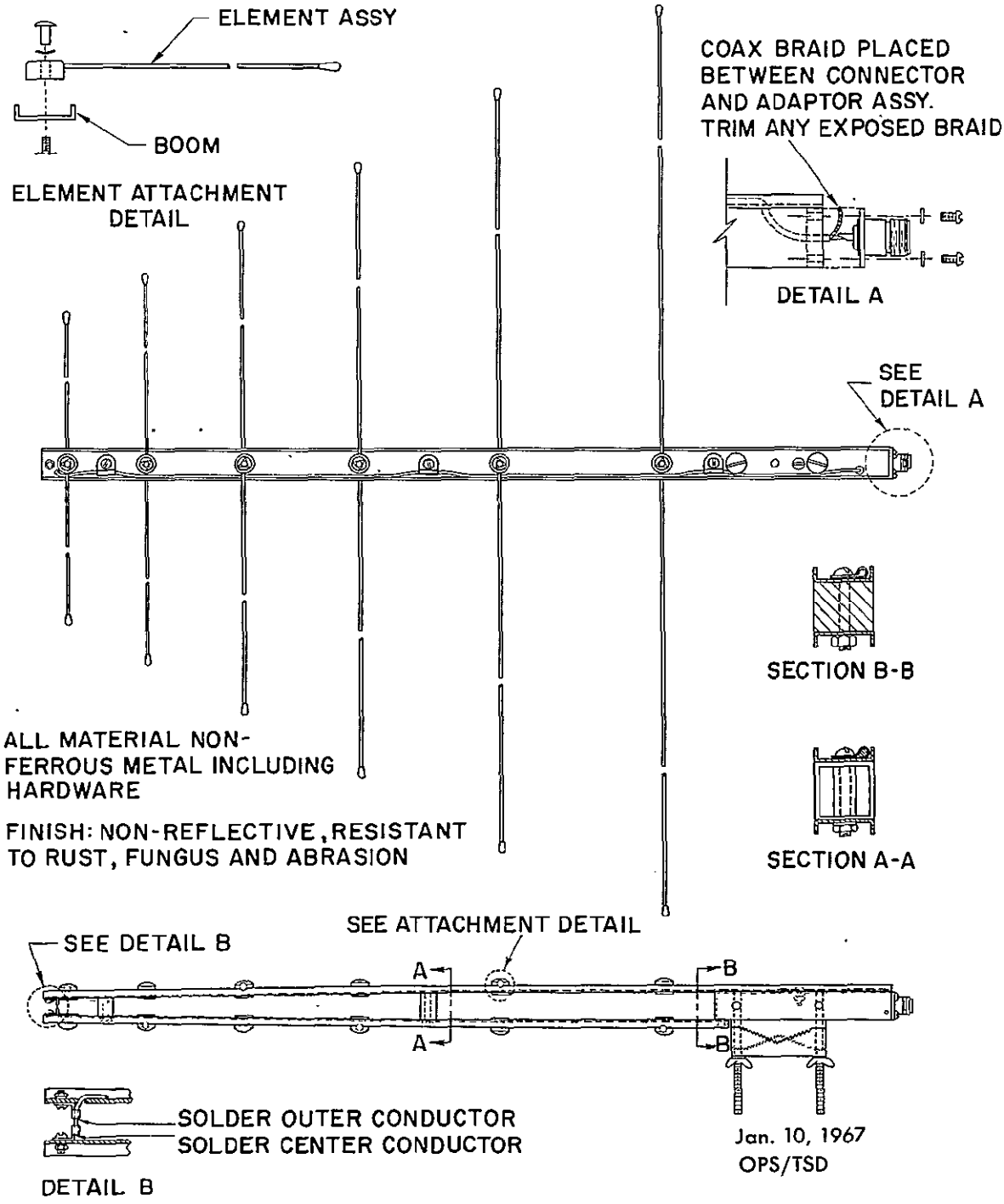
OPS/AE-13 TACTICAL LOG PERIODIC ANTENNA