A Plan for Industrial Development in IRAQ

ARTHUR D. LITTLE, INC.
CAMBRIDGE, MASSACHUSETTS

A PLAN FOR INDUSTRIAL DEVELOPMENT IN IRAQ

A Report Jointly Sponsored by
the Development Board of Iraq
and the United States Operations
Mission to Iraq

ARTHUR D. LITTLE, INC.
Cambridge 42, Massachusetts

May 1956

Arthur D. Little, Inc.

THIRTY MEMORIAL DRIVE
CAMBRIDGE 42, MASSACHUSETTS

May 31, 1956

H. E. Minister of Development
Ministry of Development
Baghdad, Iraq

Your Excellency:

We take pleasure in submitting herewith the report of the Industrial Survey of Iraq which was prepared by Arthur D. Little, Inc. under the joint sponsorship of the Development Board of Iraq and the International Cooperation Administration of the United States. It offers a plan for balanced industrial development and sets out the industrial opportunities that we consider to be suitable for immediate and future establishment. Recommendations are also offered for the improvement of existing industries and for certain legal and administrative changes designed to encourage the growth of industry in Iraq. We are convinced that the report will assist the Government of Iraq to avoid many of the pitfalls in the path of rapid industrial development and materially assist it to chart a course of action that will lead to improved living standards for the people of Iraq.

Arthur D. Little, Inc. wishes to express its appreciation of the assistance given by officials of your Ministry to the members of its staff who visited Iraq and of the friendly and helpful cooperation received from many other Government officials and private persons.

Respectfully submitted,

Arthur D. Little, Inc.

Gift 8/1/84

TABLE OF CONTENTS

	Page
LIST OF TABLES	vi
LIST OF FIGURES	viii
I. INTRODUCTION, PHASING OF THE INDUSTRIALIZATION PROGRAM	
1. Introduction	3
2. Phasing of the Industrialization Program	11
II. INDUSTRIES BASED ON DOMESTIC MINERAL RESOURCES	
1. Chemical Industries	17
2. Building Materials and Construction	161
III. INDUSTRIES BASED ON DOMESTIC AGRICULTURE	
1. Introduction	197
2. New Industrial Opportunities	198
3. Improvement and Development of Existing Agricultural Industries	249
IV. INDUSTRIES BASED PRIMARILY ON IMPORTED MATERIALS	
1. Iron and Steel	291
2. Metal Products	304
V. ADMINISTRATION AND FINANCE OF THE INDUSTRIALIZATION PROGRAM	
1. Introduction	321
2. Development Board's Policy-making Functions	322
3. Recommended Programs	324
4. The Industrial Bank of Iraq	327
5. Proposed Industrial Development Finance Company	330
6. Appendix - The Industrial Development Bank of Turkey	334
VI. PROMOTION OF INDUSTRIAL DEVELOPMENT	
1. Market Development	349
2. Fuel and Power	353
3. Transport	357
4. Labor and Labor Training	359
5. Management of Industrial Plants	363
6. Capital and Investment Climate	368
VII. RECOMMENDATIONS	
1. The Extension and Improvement of Existing Industries	377
2. The Establishment of New Industries	382
3. Industrial Opportunities that Appear to be Suitable for Establishment but for which Certain Further Data Must Be Obtained Before the Final Decision is Taken	386
4. Industrial Possibilities That Appear to Need No Further Consideration at Present	388
5. The Finance and Administration of The Industrial Program	390
6. The Promotion of Industrial Development in Iraq	391

LIST OF TABLES

Table		Page
1	Iraq Imports of Principal Chemicals	17
2	Rayon Imports by Iraq	22
3	Approximate Prices of Some Imported Rayon Fabrics, 1956	23
4	Per Capita Consumption of Major Textile Fibers	26
5	Viscose and Acetate Rayon: World Production and Trends	27
6	Approximate Capital Requirements for Plant to Produce 10 Million lbs. Per Year of Viscose Rayon Filament (Project 1)	37
7	Facilities for Production of Viscose Rayon Filament Yarn (Project 1)	37
8	Cost of Producing Rayon Filament Yarn (Project 1)	39
9	Approximate Capital Requirements for Plant to Produce 7 Million lbs. Per Year of Viscose Rayon Filament Yarn and 3 Million lbs. Per Year of Viscose Staple Fiber (Project II)	40
10	Facilities for Production of Viscose Rayon Filament Yarn and Staple Fiber (Project II)	40
11	Cost of Producing Rayon Filament Yarn and Staple Fiber (Project II)	41
12	Approximate Fixed Capital Requirements for a Rayon Weaving Mill to Produce 12.5 Million Square Meters of Fabrics, Together with Finishing Facilities to Process 12.5 Million Square Meters	42
13	Approximate Fixed Capital Requirements for Rayon Spinning and Weaving Mill to Spin 7 Million Square Meters and to Weave and Finish 12.5 Million Square Meters of Fabric	43
14	Approximate Fixed Capital Requirements for Plant to Spin, Weave, and Finish 25 Million Square Meters of Fabrics from 5 Million lbs. of Filament Yarn and 2 Million lbs. of Staple Fiber	43
15	Iraq Imports of Caustic Soda	45
16	Breakdown of Iraq Usage of Caustic Soda	45
17	Caustic Soda Production: Electrolytic Process	54
18	Estimation of Sales Price of Caustic Soda and Chlorine	55
19	Caustic Soda Production: Solvay Process	56
20	Caustic Soda Production: Gluud and Loepmann Process	58
21	Caustic Soda Production: Imported Soda Ash	60
22	Estimated Gas Consumption in Baghdad	63
23	Calculation of Natural Gas Price Equivalent to Heating Value of other Fuels	64
24	Economics of Baghdad Public Gas-Supply System Using Kirkuk Gas	65
25	Economics of Public Gas-Supply System for Basra Using Zubair Gas	66
26	Estimated Cost of Production of Sulfur from Kirkuk Natural Gas	81
27	Effect of Natural Gas Price on Cost of Sulfur Recovery	82
28	Estimated Earnings of Sulfur-Recovery Operation at Kirkuk, at Sales Price of ID11 and ID15 Per Metric Ton FOB Basra	82
29	Iraq's Fertilizer Imports (All Types)	83
30	Fertilizer Consumption (for 1953/1954) in Countries Near Iraq	87
31	Trend of Egypt's Use of Chemical Fertilizers	87

LIST OF TABLES (Continued)

Table		Page
32	World Production of Chemical Fertilizers from 1951/1952 to 1954/1955	88
33	Estimated Capital Investment for a Plant to Produce 760 Metric Tons of Ammonium Sulfate	97
34	Estimated Manufacturing Cost of Anhydrous Ammonia	98
35	Estimated Manufacturing Cost of Sulfuric Acid	100
36	Estimated Manufacturing Costs of Ammonium Sulfate	102
37	Effect of Natural Gas Cost on Total Production Cost of Ammonium Sulfate	103
38	Estimated Profits from Production and Export Sale of Ammonium Sulfate	103
39	Estimated Capital Investment for Ammonium Sulfate Plants with Capacities of 190 and 380 Tons Per Day	104
40	Estimated Manufacturing Costs of Anhydrous Ammonia	105
41	Estimated Manufacturing Cost of Sulfuric Acid	107
42	Estimated Manufacturing Cost of Ammonium Sulfate	108
43	Estimated Profits from Ammonium Sulfate Manufacture	110
44	Estimated Manufacturing Cost of Ethylene from Natural Gas Ethane	121
45	Required Price of Ethylene to Yield 10% Return on Total Capital	122
46	Effect of Natural Gas Price on Production Cost of Ethylene	122
47	Estimated United States Market for Polyethylene, 1955 and 1960	124
48	Estimated World Production Capacity of Polyethylene, 1955 and 1960	125
49	End-Uses of Polyethylene Film	126
50	Order-of-Magnitude Manufacturing Cost of Polyethylene	130
51	Estimated Profit from Polyethylene Operations	131
52	Order-of-Magnitude Profitability of Small Polyethylene Film Fabrication Plant	132
53	Order-of-Magnitude Profitability of Small Polyethylene Pipe Fabrication Plant	132
54	Polyvinyl Chloride-Copolymer Resin Production in the United States	134
55	Estimated Imports of Polyvinyl Chloride by Various Countries	134
56	Estimated Exports of Polyvinyl Chloride Resins from Various Producing Countries	135
57	Estimated Manufacturing Cost of Vinyl Chloride from Ethylene	142
58	Estimated Manufacturing Cost of Polyvinyl Chloride from Vinyl Chloride	143
59	Estimated Profit from Integrated Vinyl Chloride and Polyvinyl Chloride Plant	144
60	Imports of Three Principal Categories of Glass Products	146
61	Estimated Plant Investment: Bottle Manufacturing Plant	153
62	Estimated Manufacturing Cost of Bottle Glass	154
63	Iraqi Building Material Industry	165
64	Insulation Values of Brick, Regular Concrete and Lightweight-Aggregate Concrete	172

LIST OF TABLES (Continued)

Table		Page
65	Effects of Innovations on 1960 Building Materials Requirements	177
66	Estimate of Operating Costs for Marble Plant to Produce 1000 Cubic Meters of Marble Annually	179
67	Summary of Research Needs	213
68	Iraq Imports of Paper and Paper Products	215
69	Types and Quantities of 1954 Imports of Paper and Paper Products	216
70	Estimated 1960 Market for Paper and Paper Products	217
71	Estimated Fixed Capital Requirements for Iraq Pulp and Paper Mill	225
72	Cost of Producing Pulp	226
73	Cost of Producing Wrapping Paper	227
74	Overhead Allowances	228
75	Prices of Some Imported Papers and Paper Products	228
76	Imports of Paper and Paperboard into Selected Countries, Latest Available Year	240
77	Livestock Slain at Slaughterhouses of Iraq, 1954, According to Liwas	256
78	Average Composition and Digestible Nutrients	283
79	Actual and Estimated Future Imports of Rolled Products	294
80	Steel Door and Window Demand	306
81	Furniture Imports	309
82	Imports of Aluminum	310

LIST OF FIGURES

		Page
Figure I	Suggested Phasing of Construction Program	12
Figure II	Suggested Chemical Industry for Iraq	20
Figure III	Prices of Spun Rayon Fabric Serge No. 14	24
Figure IV	Flow Sheet of Bottle Manufacturing	151

CHAPTER I

INTRODUCTION, PHASING OF THE INDUSTRIALIZATION PROGRAM

CHAPTER I TABLE OF CONTENTS

INTRODUCTION, PHASING OF THE INDUSTRIALIZATION PROGRAM

		Page
I.	INTRODUCTION	3
	A. The Need for Industrialization in Iraq	4
	B. Iraq's Resources for Industrial Development	6
	1. Domestic Mineral Resources	6
	2. Industries Based on Domestic Agriculture	7
	3. Industries Based Primarily on Imported Materials	7
	4. Basic Resources	8
	5. The Supply of Capital and Power	8
	C. The Criteria Employed to Select Industries	9
	D. The Location of Industrial Activity in Iraq	10
II.	PHASING OF THE INDUSTRIALIZATION PROGRAM	11

I. INTRODUCTION

This report has been prepared by Arthur D. Little, Inc., under the joint sponsorship of the Development Board of Iraq and the International Co-operation Administration of the United States. At the request of the Board a series of interim reports covering Finance and Administration, Date Product Industries, Caustic Soda and Chlorine Production, and Paper Manufacture have already been submitted, together with memoranda on certain other industrial proposals. These have been embodied, in some cases in a modified form, in this report, which is based on a broad survey of Iraq's industrial resources and markets. Field studies and investigations in Iraq have been carried out by a resident team consisting of Company staff and Iraqi members, who have been assisted by visiting staff members and consultants. Many problems have been referred to the Company's staff specialists in a wide variety of industrial fields; in some cases advice has been sought from other industrial and research establishments in the United States and elsewhere. In this way a wide range of modern technological knowledge and experience has been brought to bear on the problem of achieving successful industrial development in Iraq.

Many reports made by visiting missions and experts, and proposals to build plants and establish new industries in Iraq have been examined. The work carried out by the professional experts has not been duplicated and has provided a valuable starting point for this report. On the other hand, proposals made by vendors of plant and equipment have been evaluated and in some cases found to be inappropriate for Iraq's needs at the present stage of her industrial development. With the exception of glass and pharmaceutical product manufacture, which may be suitable for establishment in a few years time, industrial projects that appear to show little chance of economic success have not been given detailed treatment, although they have received careful consideration before rejection.

The report is presented with the firm conviction that it will assist the Development Board to avoid many of the pitfalls and dangers that lie in the way of successful industrial development. It will enable the Board to embark on a program of industrial expansion that will lead to higher living standards for the people of Iraq. It offers a plan for balanced industrial development and indicates to the Development Board the industrial opportunities that are suitable for immediate and future establishment and the measures that must be taken to ensure their success. It is a plan for expanding and improving existing industries and for establishing new ones. To this end a large number of recommendations have been made. Frequently it has been possible to present sufficient information to the Board to enable it to reach decisions and to prepare, either itself or with the help of other consultants, specifications for tender. Where because important data is unavailable this has not been possible, the questions to which answers are required or to which research should be directed before final decisions can be made have been pointed out. Even

though further information or more extensive re-evaluation, either immediately or at a later date, may sometimes be necessary, the Board has been presented with an analysis of all the available relevant information and a basis for action.

In addition to recommendations to establish and improve industries, proposals have also been made for the legislative, administrative, and financial action that must be taken to ensure the healthy growth and development of industry in Iraq. These additional measures are of the greatest importance and it is strongly recommended that the Board give them its very early attention.

A. THE NEED FOR INDUSTRIALIZATION IN IRAQ

The economic activity from which the great majority of the people of Iraq derive their income is related to the growing of foodstuffs for domestic and export markets. This reflects a basic characteristic of the economic structure of Iraq, and agricultural improvement and development must be of important concern to the Board. Nevertheless, a carefully considered and successfully implemented industrialization program will lead to great benefits to the entire economy. In spite of several years of development planning and the implementation of a number of well-considered schemes for economic advance, the general standard of living remains very low in Iraq. National income calculations have not yet been attempted, because of the lack of suitable statistical data, but direct observation of living standards in rural Iraq indicates a very low level of per capita income. Arthur D. Little, Inc., is confident that a rapid and substantial improvement can be achieved if appropriate policies are pursued, and that industrial development can make an important contribution to this improvement. At the present time, Iraq is entirely neglecting, or inadequately using, some of her resources; industrial activity based on these resources offers important opportunities to produce new wealth and to improve and strengthen the whole economy. The industrialization program proposed in this report will lead to an increase in national income and hence an increased consumer and industrial demand for agricultural raw materials. Agriculture will also benefit by the tendency to employ improved methods of cultivation that will accompany a transfer of some of Iraq's agricultural workers to industrial employment. Perhaps even more important, industrialization will lead to the development of the human skills upon which all wealth-producing activity ultimately depends.

According to the 1954 Industrial census, only about 5% of Iraq's working population is engaged in industrial pursuits. Although the economic structure of the country is inappropriate for the development of a substantial large-scale industry, an increase in the size of the industrial sector is desirable. Throughout the world industrial activity is usually much more productive than agricultural activity. In many underdeveloped regions industrial workers can quickly achieve a level of productivity five or six times greater than that of agricultural workers. This is to a very great extent a result of the fact that the industrial worker is assisted by fairly large amounts of

capital and a modern technology, while the agricultural worker is frequently bound by a conservatism that causes him to retain traditional methods of cultivation or a poverty that makes it impossible for him to obtain agricultural equipment. High levels of per capita income have been achieved only in countries that have developed their industrial resources on a considerable scale. Each worker employed in the highly efficient agricultural industries of Australia, New Zealand, and Denmark, for example, is matched by at least one and in other high-income countries by two, three, or four workers in industry. There is in fact a statistical correlation between high levels of national income and the degree of industrialization. While it is impossible here to lay down the appropriate relationship between industry and agriculture, it is clear that high living standards cannot be achieved without a substantial increase in industrial activity in Iraq. The present very small size of her industry and the availability of potentially valuable industrial materials indicate that one of the fastest and most certain routes to higher living standards for the people of Iraq is an industrialization program that will lead to a substantial increase in the proportion of the country's working population that is employed in industry.

There is a further important advantage to be obtained from industrial expansion. Iraq's poverty and underdevelopment have been caused by a number of factors, but one of the most important has been the absence of sufficient saving to permit adequate capital accumulation, and resultant investment. Increased industrial activity would increase the power to save by raising the incomes of large sections of the population. In the economically advanced countries, industrial concerns are one of the most important sources of savings, and there is no reason to believe that they would not become so in Iraq. Fortunately, the low level of savings is not a serious problem in Iraq at the moment, because the State is providing a large amount of public savings by its allocation of a large share of the oil revenues to the Development Board for capital formation. Iraq is thus free from the greatest difficulty that besets most other underdeveloped countries in their effort to raise the living standards of their people; she has the ability to purchase equipment and machinery from abroad and to pay for the substantial volume of consumer-good imports that will be necessary to prevent serious inflation during the early stages of development spending. Although this is a very great advantage it must not be permitted to lead to an attitude that is careless of the future and unattentive to economic efficiency in industrial and other development projects. Care has been taken in this report not to recommend industries for which there is not adequate economic justification.

The very slow rate at which industrialization has proceeded in Iraq indicates that sufficient industrial growth to achieve a substantial increase in the national income will not take place unless firm Government action is taken. This report indicates the lines along which such action is required. Modern technology offers means by which Iraq's resources can be developed and their wealth-producing capacity harnessed; appropriate technologies, methods, and procedures for this purpose are indicated in this report.

B. IRAQ'S RESOURCES FOR INDUSTRIAL DEVELOPMENT

Although Iraq's economic resources have not yet been fully surveyed, they are, as the World Bank Report points out, ample for further industrial development. Petroleum, natural gas, salt, gypsum, lime, livestock, and agricultural crops provide a base for additional industrial activity in Iraq. Further survey work may reveal that the known deposits of iron, copper, chrome, zinc, phosphates, and sulphur are also industrially significant. This report, however, is concerned only with the proven resources and the materials that can be imported from foreign countries with economic advantage. Proposals are made to establish or increase industrial activity based upon domestic mineral resources, domestic agriculture, and imported raw materials, and to improve and bring into fuller utilization the basic resources of capital, fuel and power, labor, and transport.

1. Domestic Mineral Resources

Proposals are made for the establishment of a chemical industry in Iraq, and for expanding and improving the building materials industries. The report recommends that a chemical industry based primarily upon the supplies of natural gas and salt should be established immediately. Natural gas is a raw material for the manufacture of rayon fiber, fertilizer, and plastics, and in the case of the Kirkuk gas, a valuable source of sulphur. Salt, from either the Basra salt dome or the Fao evaporative installations, can be used to produce caustic soda and chlorine, which are, respectively, raw materials for rayon and plastic material manufacture. Crude petroleum could also be used as a raw material to produce the products derivable from natural gas. But in the interest of conservation it is recommended that the initial steps to develop a chemical industry in Iraq be based upon the use of natural gas, since this is at present being wasted. When the basis of a chemical industry has been laid, it might be desirable to consider industrial operations using crude petroleum as a raw material. At the present time, however, crude petroleum is by far the most adequately developed of Iraq's economic resources: it is a major export and a raw material for the Dora Refinery. An assumption of this report, therefore, is that its immediate further development should give place to measures to utilize natural gas.

It is clear that Iraq's future economic and political development will be closely related to her chemical resources. This raises an important question. Modern chemical operations must be constructed on a large scale if they are to be economically successful, but Iraq's market for chemical products is, and will remain for many years, very limited. To achieve a full utilization of Iraq's resources it will therefore be necessary to produce chemicals for foreign markets on a large scale. To some extent the manufacture of rayon fiber provides an exception because of the very substantial domestic demand for rayon fabrics, but even here a foreign market is involved since the necessary caustic soda can be economically produced in Iraq only if the joint product, chlorine, can be sold at a profitable price. This can best be achieved

by its use as a raw material for the manufacture of the plastic material, polyvinyl chloride. Dependence on export markets is, however, characteristic of the economies of many other countries and is not necessarily disadvantageous. Since the world demand for chemical substances and products is rising rapidly, dependence on export markets does not seem to pose a very serious problem in Iraq's case but instead offers the advantage of overcoming the difficulties of limited markets, which have hitherto tended to hold back industrial development. The World Bank, pointing to Iraq's limited domestic market, explains the importance of foreign outlets and also recommends the establishment of a large chemical industry almost entirely for export.

Special attention has been devoted to the building materials and construction industry, and proposals are made to expand existing plants, to establish new ones to produce new products, and to improve construction specifications and methods. The recent decision of the Iraq Government to provide improved housing for the people offers important opportunities. Present brick production can be improved, and sand-lime and cement brick production introduced. Cement-product manufacture can be greatly expanded and light-weight aggregate introduced. Although the continued use of gypsum mortar is not recommended, gypsum can be used as a raw material for a gypsum products industry; increased usage is foreseen. Finally, proposals are offered to set up a series of Boards and Committees charged with the task of laying down and enforcing materials and construction standards.

2. Industries Based on Domestic Agriculture

Industries based on domestic agriculture have already made substantial progress in Iraq. Medium-sized plants to produce cotton fabrics, vegetable oils and soaps, alcohol from dates, shoes, and ready-made clothing have already been established. The report makes many proposals for expanding and improving these already existing industries and further recommends the establishment of plants to produce paper from reeds and animal feed and syrup from dates. Progress on this important sector of the economy will be of an evolutionary nature, but the Board is strongly recommended to assist it by the provision of technical assistance and increased supplies of capital, and the encouragement of schemes designed to improve the quality of Iraq's livestock and agricultural crops.

3. Industries Based Primarily on Imported Materials

Iraq is already using substantial quantities of imported metal goods in the form of rolled steel and many fabricated products. Because many of these products can be made satisfactorily on a fairly small scale, the report recommends the establishment of plants to convert imported raw materials into finished products. The major recommendation in this section is for the building of a steel-rolling mill to roll imported billets and billets to be made from domestic scrap. Further recommendations are made for plants to produce refrigerators, kerosene heaters, and several other metal products, and to im-

prove the quality of domestically made goods by the setting up of a department of standards.

4. Basic Resources

In Section II-F, measures have been recommended to enlarge the markets for the products of domestic industry and to develop the basic resources - fuel and power, transport, labor, management and capital - upon which successful industrialization depends. Although the Development Board can do much to assist industrial growth by sponsoring particular industrial projects, Arthur D. Little, Inc., believes that the Board can make an even more important contribution by improving the quality and availability of these basic resources. In this way, a foundation upon which industry can organically grow and develop will be created. To assist this process and to reduce the administrative strain on the Development Board, a special procedure for the administration and finance of the Board's industrial program is also recommended. Under this procedure the Industrial Bank, to be assisted later by a new institution, would establish companies (with, whenever possible, the additional participation of private capital) to manage the plants that the Development Board considers to be suitable for development. In this way the contributions in skill, experience, management ability, and capital of large numbers of people would be brought to bear on the specific problems of Iraq's industrial development. This procedure, explained in detail in Chapter Five, is in consonance with the advice given by both the I.B.R.D.[1] mission and Lord Salter.[2]

5. The Supply of Capital and Power

Proposals for industrial development in Iraq must take into account the plentiful supplies of investment capital and low-cost fuel that are now available. In the cost calculations made in this report, it has been necessary to allocate economically realistic prices to these basic industrial resources, because current market prices, particularly in the case of electric power, do not reflect this underlying situation. Electric power has been charged at 2 fils per kilowatthour, although this is substantially below current rates. There is evidence to indicate that power can be produced in Iraq at a somewhat lower cost, and it is recommended that its price for industrial uses eventually be reduced to this figure. Interest on invested capital, charged at 4% in all calculations, is somewhat below market rates, but is considered to be appropriate in view of Iraq's adequate supply of investment funds. Low-cost supplies of power and capital can do much to stimulate industrial growth, and it is strongly recommended that the Board lend its support to a policy of encouraging industrial advance by the provision of these basic resources at economically appropriate prices.

1. The Economic Development of Iraq, International Bank for Reconstruction and Development (1952).

2. The Development of Iraq, report to the Development Board of the Government of Iraq (1955).

C. THE CRITERIA EMPLOYED TO SELECT INDUSTRIES

Advice on industrialization policy in Iraq has been given in reports presented by the World Bank, Professor Iversen,[1] and Lord Salter. Arthur D. Little, Inc., is in sympathy with the general nature of the advice they have offered. All three reports point out that forced industrialization with the aid of tariff protection or Government subsidy might lead to inefficiency and the waste of economic resources. This view is accepted by Arthur D. Little, Inc., and no industry has been recommended unless it is anticipated that it will produce at a cost below the landed price of comparable imported goods or materials before import duty has been levied. In the future, it may be desirable to apply a less stringent test, but at the moment a number of industrial opportunities promise a profitability that does not need additional assistance. It is clearly desirable that they be established first.

When private investors are contemplating the setting up of new industries, they will of course make their calculations on the basis of prices plus import duty, since their financial results will be determined by the prices at which they can sell their products. If tariff rates were raised to a sufficiently high level, the production of almost any commodity could be justified on the basis of the financial return to the manufacturer. This, however, is not true economic efficiency and has led to the establishment of uneconomic industries in other countries, where plants have been set up that can avoid serious loss only by artificial support provided by the consumers, who are forced to pay unreasonably high prices for their goods. Although in a number of cases the establishment of the industries recommended in this report will lead to a fall in revenue from tariff duties, real economic loss to the nation is not caused. Sums equal to the Treasury's lost revenue will appear in the form of increased incomes and profits; compensating taxes could restore the Treasury's loss of tariff revenue. Increased domestic taxes are not, however, recommended, because they would tend to discourage industrial development. The immediate loss of tariff revenue to the Treasury is a natural consequence of industrial expansion; it will very quickly be followed by increased revenue resulting from the higher level of national income induced by industrialization. Income, corporation, and other taxes will all increase with industrialization. If further export industries are developed, it will be possible to greatly increase imports (and hence tariff revenue) in spite of domestic industrial expansion.

Adequate markets are of the greatest importance and special attention has been paid to their examination. Throughout this report it has been assumed that domestic demand will continue to advance at the rate of growth observed since 1949, while export markets have been assumed to remain constant except where special factors of change are known to exist. Although a number of industries designed to supply Iraq's domestic market are suitable for establishment, domestic markets are, at present, far too small to justify a substantial program of industrial expansion. It has, therefore, been necessary to recommend for immediate establishment or for further study a number of

1. Monetary Policy in Iraq, report to National Bank of Iraq (1954).

plants that will produce products mainly for export markets.

All industrial opportunities recommended have been required to meet one further test. The technical process recommended must have been in successful use elsewhere for a reasonable period of time. An exception is made in the case of the industrial use of dates, since proven technologies do not exist; they will have to be developed in Iraq itself.

D. THE LOCATION OF INDUSTRIAL ACTIVITY IN IRAQ

In countries in which industry has been established by private enterprise without direction from the government, the location of plants has generally been determined by the availability of materials, power, capital, and transport, and by proximity to large market areas. The interplay of these factors has led to locational patterns that are frequently undesirable from social and strategic points of view. Lord Salter has argued that concentrations of industrial plants near the large centers of population should be avoided and that a policy of locational diversification should be adopted by the Board. Unfortunately, such diversification is likely to be somewhat difficult to achieve, because there are real economic advantages to be obtained from locations near centers of population, sources of materials, and the supporting service industries that provide what are known as external economies.

Some degree of locational diversification is, however, possible in Iraq's industrial development program and is recommended in this report. For example, the two rayon textile plants recommended for establishment could be located in Najaf, Kerbela, or Hilla, with advantage at least from the point of view of labor supply and market demand; the recommended expansion of the building, agricultural, and metal products industries should, of course, take place in as many parts of the country as possible. On the other hand, much of Iraq's industrial activity will have to take place in Baghdad, Kirkuk, Mosul, or Basra, for many years to come. The recommended chemical industry must be located in Basra, Kirkuk, or possibly Baghdad; paper must be made in Basra. When Iraq's national income has risen substantially and market demand is sufficiently large to sustain greatly increased domestic industries, further diversification may be possible.

II. PHASING OF THE INDUSTRIALIZATION PROGRAM

It is estimated that total labor requirements for the suggested program would amount to about 35,000 workers. This compares with a total industrial employment in Iraq in 1954 of 90,291 workers, of whom only 38,692 were employed in factories employing more than 20 workers. It thus represents almost a doubling of the industrial employment in medium- and large-scale industry. Additional employment amounting to an estimated 25,000 workers would arise in transport, trade, and service occupations as a result of the expansion of investment and output. Little difficulty in obtaining sufficient unskilled workers is envisaged, but shortages of skilled workers are likely to arise and recommendations to overcome this difficulty are made in the section of the report that deals with labor training. To achieve this very substantial industrial expansion other problems in the supply of materials, power, management and transport will also have to be overcome and a series of recommendations designed to overcome them is offered.

Numerous recommendations have been made to improve and expand existing industries. It is estimated that a total investment of about ID 15 million will be necessary during the next six or seven years. The implementation of these recommendations would lead to improvements in the output and efficiency of the Building, Agricultural, and Metal Products Industries, and to a considerable strengthening of the country's economy. Further proposals for new industries, requiring a total investment of about ID 28 million, are also made. It is considered that it would be possible to act upon these proposals within six years, after which time all the new plants could be in operation or under construction.

The total program, including private participation, would require an investment of about ID 43 million. A certain amount of additional private investment can also be expected, and the Development Board is urged to encourage and assist this as much as possible. Further investment opportunities for implementation during the later phases of the program will in all probability be revealed by the various research and investigation projects that have also been recommended, so that total investment in industry during the next six or seven years may substantially exceed ID 43 million.

Investment outlays of this magnitude must be spread over a number of years, and an attempt has been made to indicate an order of priorities that takes into account the relevant economic and technical considerations. This has resulted in a suggestion for a four-phase program covering a total period of about six years. (See Fig 1) None of the phases should exceed 18 months, and an attempt should be made to reduce them to a shorter period.

The industries recommended for inclusion in Phase I require no further major investigations; plans for immediate implementation could be made. The recommended timing of the other projects has been determined by a number of

different considerations. In certain cases further information must be obtained before the final decision to implement can be made; immediate establishment is precluded. In other cases one plant can be established only simultaneously with or after another from which it will draw its raw material or to which it will sell its output. It is very important that the phasing recommended should not be considered an inflexible plan. Since markets and technological factors change rapidly in the modern world and new domestic mineral resources may be discovered at any time, the Board should reassess the over-all situation at frequent intervals.

FIGURE I. SUGGESTED PHASING OF CONSTRUCTION PROGRAM

PHASE I	PHASE II	PHASE III	PHASE IV
Rayon Textile Mill Sulfur-Extraction Plant Paper Plant Date Industries: Syrup Plant Animal-Feed Plant	Rayon Textile Mill Steel-Rolling Mill Fertilizer Plant	Rayon Plant Plastic-Material Plants: Ethylene Polyethylene	Steel Furnace Plastic-Material Plant: Polyvinyl Chloride Caustic Soda Plant Date Industries: Syrup Plant Animal-Feed Plant
Extension and Improvement of: Agricultural-Product Industries Metal-Product Industries Building-Material Industries	Extension and Improvement of: Agricultural-Product Industries Metal-Product Industries Building-Material Industries	Extension and Improvement of: Agricultural-Product Industries Metal-Product Industries Building-Material Industries	Extension and Improvement of: Agricultural-Product Industries Metal-Product Industries Building-Material Industries
Approximate Total Investment:			
ID 7,500,000[1]	ID 14,000,000	ID 13,500,000[2]	ID 8,000,000[2]

1. Exclusive of planned investment in Mosul Sugar Plant.
2. Industrial opportunities revealed by the recommended programs of research and investigation would increase this total.

CHAPTER II

INDUSTRIES BASED ON DOMESTIC MINERAL RESOURCES

CHAPTER II TABLE OF CONTENTS
INDUSTRIES BASED ON DOMESTIC MINERAL RESOURCES

	Page
I. CHEMICAL INDUSTRIES	17
A. The Development of a Chemical Industry in Iraq	17
B. Rayon Manufacture	21
1. Introduction	21
2. Recommendations	21
3. Market for Rayon and Rayon Fabrics	21
4. Resources	27
5. Manufacture of Rayon and Production of Fabrics	29
6. Costs and Investment	31
7. Special Problems and Considerations	35
8. Priority	37
C. Production of Caustic Soda and Chlorine	44
1. Introduction	44
2. Recommendations	44
3. Markets for Caustic Soda and Chlorine	45
4. Resources	46
5. Methods of Producing Caustic Soda	47
6. Costs and Investment	50
7. Priority	52
8. Means of Establishment	52
D. Natural Gas	61
1. Use as a Domestic Fuel	61
2. Use as an Export Fuel	68
3. Sulfur Recovery	69
4. Petrochemicals	70
5. Recommendations	73
E. Sulfur Recovery	74
1. Introduction	74
2. Recommendations	74
3. Markets for Sulfur	75
4. Resources	76
5. Recovery of Sulfur from Natural Gas	77
6. Costs and Investment	78
7. Special Problems and Gonsiderations	79
8. Priority	80
F. Fertilizer Production	83
1. Introduction	83
2. Market Aspects of Fertilizers	83
3. Type of Nitrogeneous Fertilizer to be Manufactured	88
4. Manufacture of Ammonium Sulfate	89
5. Costs and Investment	92
6. Special Problems and Considerations	94
7. Means of Establishment	96
8. Recommendations	96
9. Appendix	111
G. Manufacture of Plastic Material	116
1. Recommendations	116
2. Ethylene Manufacture	116
3. Polyethylene manufacture	122
4. Manufacture of Polyvinyl Chloride	133

CHAPTER II TABLE OF CONTENTS (Continued)

	Page
H. Glass Manufacture	145
1. Introduction	145
2. Recommendations	145
3. Present and Potential Markets	145
4. Resources	148
5. Manufacture of Glass	150
6. Costs and Investments	151
7. Priority	156
I. Pharmaceuticals	157
1. Introduction	157
2. Markets for Pharmaceuticals	157
3. Resources	157
4. Pharmaceutical Manufacture	158
5. Costs and Investment	159
6. Special Problems and Considerations	159
7. Recommendations	160
II. BUILDING MATERIALS AND CONSTRUCTION	161
A. Introduction	161
B. Market Development and Materials Requirements	162
C. Recommendations (First Group)	166
D. Recommendations (Second Group)	167
E. Industrial Development of Building Materials	168
1. Clay Bricks	168
2. Concrete and Concrete Products	169
3. Lightweight Aggregates	171
4. Sand-Lime and Cement Bricks	173
5. Gypsum Products	175
6. Lime	176
7. Marble	178
8. Other Materials	180
F. Development of Building Materials	181
1. Finance	181
2. Geological Survey	182
3. Building Materials Advisory Board	183
4. Material Specifications Committee	183
5. Building Code Committee	184
6. Building Materials Research Laboratory	185
7. Routine Testing Laboratory	186
E. Appendix	187
1. Probable Expansion of Private Housing Construction	187
2. Materials Estimates: Current Private Construction	187
3. Materials Estimates: Government Rehousing Program	188
4. Calculations: Total New Materials Requirements by 1960	188
5. Calculations: Effects of the Introduction of New Materials and Methods upon Total New Materials Requirements by 1960	189

I. CHEMICAL INDUSTRIES

A. THE DEVELOPMENT OF A CHEMICAL INDUSTRY IN IRAQ

Effective utilization of Iraq's mineral resources can best be accomplished by the establishment of an integrated chemical industry, partly for the domestic market and partly for export. The sulfur, salt, and natural gas that are available can serve as an excellent base for the profitable production of numerous industrial chemicals. The recently discovered phosphate deposits may also prove to be a valuable resource for this purpose. These resources are an important potential source of wealth, but at the present time there is, for practical purposes, no chemical industry in Iraq. Domestic demand is very small and imports of chemicals represent, for the most part, only a small fraction of the output of minimum-sized chemical plants. Table 1 shows the imports of chemicals for 1950 to 1954.

TABLE I

IRAQ IMPORTS OF PRINCIPAL CHEMICALS [1]

	1950	1951	1952	1953	1954
Caustic Soda	1105	935	1646	1061	1125
Sulfuric Acid	115	305	204	80	140
Soda Ash	387	114	274	102	155
Sodium Bicarbonate	164	694	411	81	293
Tartaric Acid	114	80	146	--	--
Other Acids	120	153	182	--	--
Methyl Alcohol	35362	28782	13441	--	--
Other Alcohols	220	--	3661	--	--
Chlorine (Estimated)	-	100	100	100	100

1. Source: Iraq Department of Customs and Excise.
All amounts listed are in metric tons, except for Methyl and other alcohols, which are expressed in liters.

In the chemical industries, production costs are generally closely related to plant size, and the modern tendency is to build fairly large plants in order to keep labor and capital charges to a minimum. This results in the need to ensure that substantial markets for the products exist before plants are erected. The limited nature of present domestic markets would, therefore, in almost all cases prevent the establishment of chemical-manufacturing plants in Iraq. This in turn would tend to prevent domestic markets from expanding, because it would not be possible for consumers to obtain chemicals at a low price. By producing for export markets, however, it would be possible to supply domestic markets with chemicals at low prices, thus stimulating their use and expanding domestic consumption.

Unfortunately, there are serious problems associated with production for export markets. Competition from industrially developed countries will be strong; tariff barriers that are sometimes erected by importing countries can jeopardize the sales of the product; increased costs, due to transportation, and the need to furnish expensive technical services can be troublesome. The risks involved, however, can be and in other countries have been overcome. Fortunately, Iraq's geographical position is very suitable to supply the growing markets of the Near and Far East, since its closeness to these areas gives it an advantage in transportation costs over producers in Europe and America.

The establishment of chemical industries elsewhere in the world has generally been for the specific purpose of supplying commodities needed by other industries, such as those for the manufacture of steel, glass, and paper. Only since the beginning of this century has the chemical industry been able to compete directly with these other industries, and as a result of the development of new chemical substances, compete with the products of the other industries. For example, rayon and synthetic fibers now compete with cotton and wool, and plastic materials compete with steel, glass, and wood in many applications. In Iraq, as in other countries, a chemical industry would start as a supplier of materials needed by other industries, but would soon begin to offer its own products for both domestic and foreign consumer use.

The nature of the chemical industry is such that joint products or by-products often result from the productive process, and economics are generally such that unless markets can be found for the extra products, it is not profitable to produce the main product. As a result, the chemical industry consists of a series of complex, interdependent plants; despite the large sales of products to other industries, it has now become its own best customer. Products of one plant are used by another in manufacturing a product required by an external industry. The second plant in turn produces joint products or by-products that are used by a third plant, and so on. The possible lines of development of a chemical industry in Iraq illustrate this interdependence.

Investigation has disclosed that the establishment in Iraq of plants to produce rayon and paper and to recover sulfur from natural gas are economically justified. The establishment of a rayon plant and a paper mill of the recommended size would between them require a total of 5600 tons annually of caustic soda. This, coupled with the demand of existing industries, would by 1960 result in a probable total demand of about 8000 tons of caustic soda, which would justify its production in Iraq. The only method of producing this chemical that would be economical in Iraq, the electrolytic method, would result in the production of about 0.9 ton of chlorine for each ton of caustic soda produced. Unless markets could be found for the chlorine it would be cheaper to import the caustic soda, because the production of caustic soda would be uneconomical.

Chlorine has found widespread use in the bleaching of paper and cotton, as a water purifier, and in the manufacture of plastics and insecticides. Iraq's only present use of chlorine is for water purification, and this requires no more than 100 tons a year. It would seem at first sight that the use of chlorine for insecticide production would be an attractive outlet for the chlorine because of Iraq's agricultural base, but the present lack of basic raw materials, such as benzene, chloral, and the relatively complex organic compounds that are required in the manufacture of phosphate-type insecticides, precludes their immediate manufacture. In addition, the types of insecticides best suited to Iraq's needs are not known, and the continually changing effectiveness of various insecticides would make production undesirable at this time.

The proposed plastic material industry, however, offers a potential market for chlorine, because it is required as a raw material for the manufacture of polyvinyl chloride. Natural gas can be used to produce ethylene, which is a raw material for both polyvinyl chloride and polyethylene, both of which are widely used plastics with growing world markets. It is recommended that plants to produce these plastic materials be established primarily for export, but it is also anticipated that domestic markets for them will grow because of the high cost of imported wood and metal.

The recovery of sulfur from Kirkuk natural gas would offer the opportunity to supply, in addition to export markets, the rayon plant with the sulfur and sulfuric acid it would need, and would offer the chance of producing fertilizer in Iraq. The sulfur would be required in substantial quantities to produce ammonium sulfate, if this is confirmed to be the most suitable fertilizer for manufacture in Iraq. Since ammonium sulfate, or the other nitrogenous fertilizers, ammonium nitrate and urea, would require ammonia, which could be manufactured from natural gas, there would be another effective use for this valuable resource.

Detailed investigations of the plants discussed above have been made and estimates of investment and operating costs, together with specific recommendations concerning their establishment, are presented in the following sections. A schematic diagram of the integrated chemical industry that would result from establishment of the plants discussed is shown in Figure II. If a decision is reached to establish the plants recommended in this report, it may be desirable, at the time specifications are being prepared, to alter the capacities recommended. For example, a decision might be reached to increase the size of the rayon plant in order to produce rayon more cheaply, or to increase the production of polyvinyl chloride to use more chlorine. Such changes can, of course, be made, but their effect on the other industries involved must be evaluated at the time of the change, and corresponding alterations made. Unless mutually consistent modifications are made with due regard to consequential changes in plant capacities, uneconomic results will follow.

Figure II.
SUGGESTED CHEMICAL INDUSTRY
FOR IRAQ

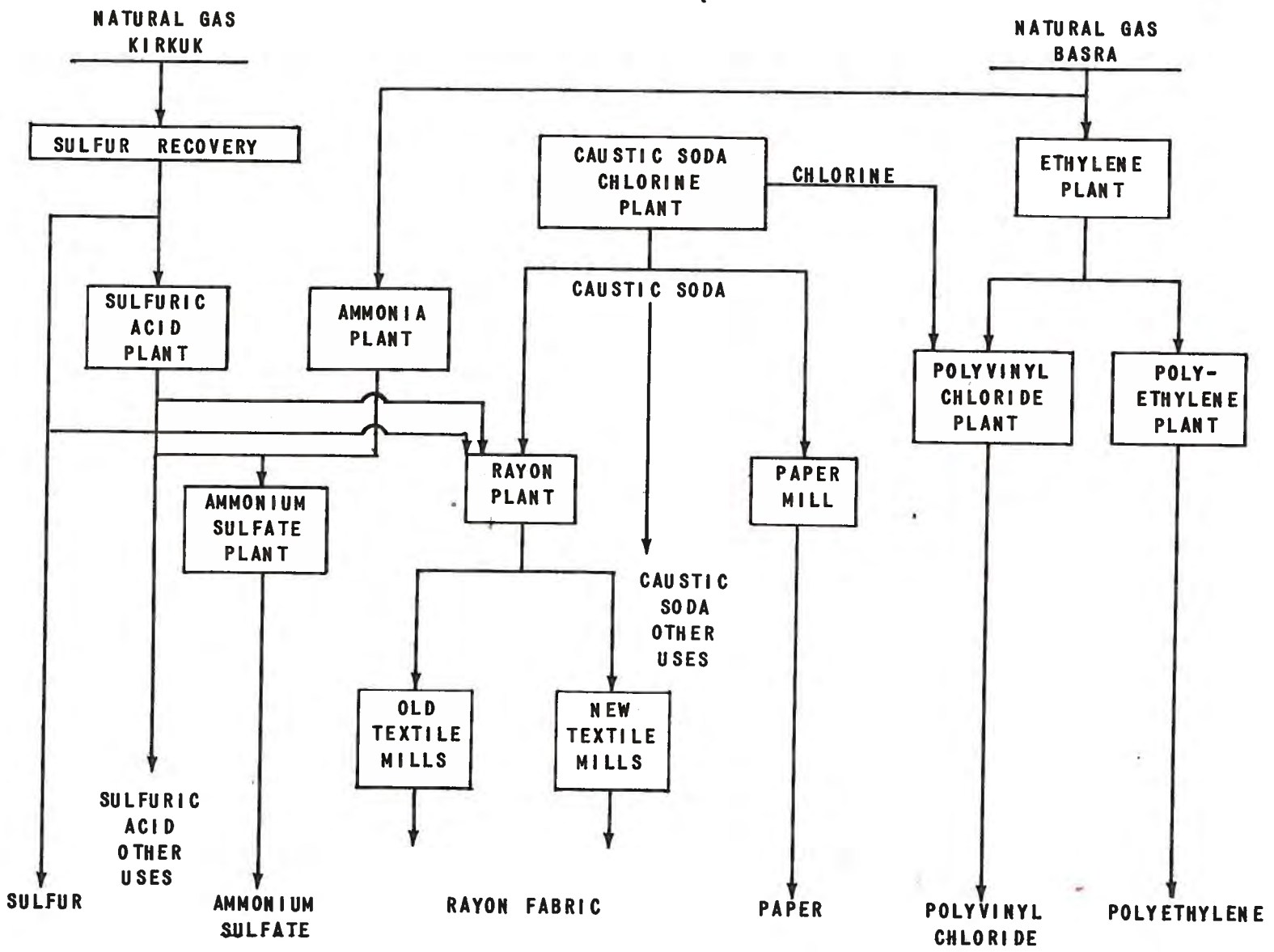

B. RAYON MANUFACTURE

1. Introduction

Iraq's consumption of imported rayon fabrics has increased very rapidly over the past five years, to the point where their domestic production should be considered. An economic evaluation has been made of the feasibility of producing both the fabrics and the rayon filament yarn and staple fiber. Present import and consumption data have been analyzed to determine the present and potential markets for rayon. Discussions have been carried on with groups experienced in the rayon industry in the United States, the Middle East, and elsewhere; from these discussions have resulted cost estimates and recommendations for rayon production.

The general conclusion is that a rayon industry should be established in Iraq, but that the textile portion of the industry should be established before the plant to produce rayon, in order to ensure an adequate market for the rayon plant when it comes into operation. It is not possible to estimate the actual production costs of spinning and weaving, because these costs depend on ultimate labor productivity and the products made. However, experience in other industrially underdeveloped countries and the fact that filament yarn and staple fiber can be manufactured in Iraq at a cost below landed costs indicate good chances of success. In addition, the establishment of a rayon industry would materially aid industrialization as a whole, since the industry would be a large consumer of chemicals that can be made domestically at considerable profit.

2. Recommendations

1. Rayon textile facilities should be established consisting of two basic units. One of the units should be a weaving mill with a capacity of 12.5 million square meters, together with finishing facilities. The other unit should consist of a mill with a spinning capacity of 7 million square meters and a weaving capacity of 12.5 million square meters, together with finishing facilities. These textile facilities would at first use imported yarn and staple fiber.
2. After the textile facilities have been established, a plant to produce viscose rayon filament yarn and viscose staple fiber should be established. This plant should have a capacity of 7 million lb of filament yarn and 3 million lb of staple fiber. Of its output, 70% would be used to supply the mills recommended for establishment, and 30% would be used to supply mills that have already been established.

3. Market for Rayon and Rayon Fabrics

a. Present Market

Iraq is currently importing large amounts of rayon in the form of

filament yarn (a number of fine, continous filaments grouped and lightly twisted together), staple fiber (rayon filaments cut into uniform lengths, which are subsequently spun into yarn in the same manner as cotton or wool), and piece goods. The yarn and fiber are made into fabrics in a number of small spinning and weaving mills. Imports in 1954 were 930 tons of rayon filament, 499 tons of rayon staple fiber, and 49 million square meters of rayon fabrics, with a total value of ID 5,300,000. The 1954 imports are estimated to be equivalent to a total of 7500 tons of rayon, which indicates a per capita consumption of 1.4 kilograms and compares with world rayon per capita consumption of 0.74 kilograms and United Kingdom consumption of 2.7 kilograms.

The growth of rayon imports has been a rapid one, as indicated by Table 2. Average annual rate of increase in rayon imports has been 50% over the period 1950 through 1954. The rapid rise in rayon imports has been accompanied by a decline in rayon prices. Table 3 shows current prices, C.I.F. Basra, of most of the types of rayon fabrics imported. Talks with rayon importers indicate that the current prices of rayon are likely to remain constant or drop slightly further. Figure III shows the trend of prices for one particular type of rayon fabric, Serge No. 14 of Spun Rayon. The price dropped from 120 fils per yard in 1950 to 54 fils per yard in 1955. This is typical of other fabrics. The most important factor contributing to the decline in the price of rayon fabrics appears to be competition from Japanese rayon fabrics. In 1950, Japan supplied less than 1% of the market, but by 1954 she had obtained about 75% of the market at much lower prices.

TABLE 2

RAYON IMPORTS BY IRAQ

	RAYON FILAMENT YARN		RAYON STAPLE FIBER		RAYON FABRICS	
YEAR	AMOUNT (METRIC) (TONS)	VALUE (ID)	AMOUNT (METRIC) (TONS)	VALUE (ID)	AMOUNT (THOUSAND SQUARE METERS)	VALUE (THOUSAND ID)
1950	251	137,541	16	3,625	10,095	1,350
1951	414	369,553	26	6,939	19,712	3,100
1952	483	432,791	62	14,000	23,836	2,973
1953	665	359,597	414	100,711	35,967	3,664
1954	930	412,213	499	120,268	49,038	4,780

SOURCE: Iraq Department of Customs and Excise.

TABLE 3

APPROXIMATE PRICES OF SOME IMPORTED RAYON FABRICS, 1955

	PRICE, C.I.F. BASRA (FILS PER YARD)
SATINS	
150D X 150D - 36''	58
120D X 120D - 36''	52
FLAT CREPES AND MOSS CREPES, PLAIN	
120D X 120D - 28''	76
100D X 100D - 28''	70
FLAT CREPES AND MOSS CREPES, PRINTED	
120D X 120D - 36''	110
100D X 100D - 36''	95
CREPE SATINS: FLAT WARP, VOILE WEFT, PRINTED	
150D X 150D - 36''	70
120D X 120D - 36''	68
CREPE SATINS: FLAT WARP, VOILE WEFT, DYED	
150D X 150D - 36''	50
120D X 120D - 36''	52
POPLINS	
150D X 150D - 36''	96
120D X 120D - 36''	88
PRINTED DRESS FABRICS, 4 TO 6 COLORS, PLAIN WEAVE	
150D x 150D - 36''	60
PRINTED DRESS FABRICS, 4 TO 6 COLORS, SATIN WEAVE	
150D X 150D - 36''	88
120D X 120D - 36''	72
BROCADES (JACQUERED)	
150D X 150D - 36''	96
120D X 120D - 36''	71
SERGE DYED, SPUN VISCOSE RAYON	
325 X 325 - 36''	44
POPLINS, PLAIN	
110/48 325 X 325 32'' - 36''	144 - 240
TWILLS, PLAIN	
124/62 325 X 325 - SUPERIOR QUALITY - 52''	300 - 350
CREPE SATIN, PRINTED	
100D/120D - 36''	100

SOURCE: Discussions with Iraqi importers.

FIGURE III.

PRICES OF SPUN RAYON FABRIC, SERGE NO. 14

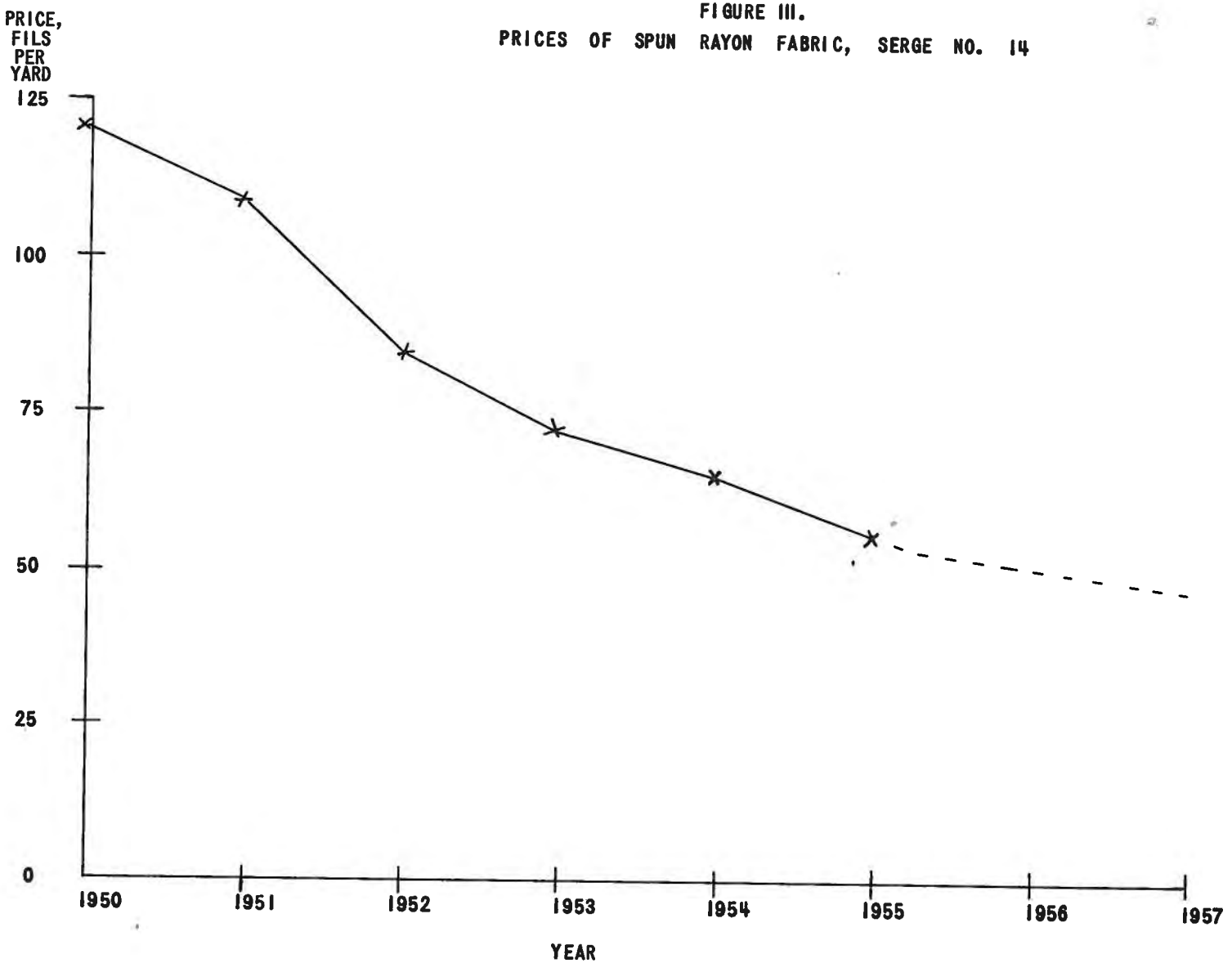

The rapid growth of the rayon market can be contrasted with the cotton and wool markets in Iraq. The consumption of cotton has declined slightly during the past five years. Imports in 1950, just after the Iraq Spinning and Weaving Company came into operation, were 54 million square meters. In 1954, with Iraq Spinning and Weaving producing approximately 12.5 million square meters, imports were 38 million square meters, indicating a drop in total consumption of about 6%. Per capita consumption of cotton is estimated to be approximately 1.2 kilograms, as compared with the world per capita consumption of 2.95 kilograms and that of the United Kingdom of 7.4 kilograms. Wool consumption in Iraq is only a fraction of that of cotton and rayon. About 1,750,000 square meters is imported, and an additional 700,000 square meters is woven domestically. The principal use for wool is in blankets, suits, and military uniforms.

Thus rayon consumption in Iraq is approximately equal to that of cotton and is increasing rapidly despite the fact that all rayon must be imported either as fabric or as filament or yarn for manufacture into fabrics in local mills.

b. Potential Market

As can be seen from Table 4, which shows per capita consumption of cotton, wool, and rayon textile fibers, Iraq's total per capita consumption of these major fibers is below the world per capita consumption and less than 25% of the United Kingdom's consumption, although the total has risen appreciably since 1951, with the principal increase occurring in the consumption of rayon. The demand for wool fiber will continue to grow because of its use in suits and blankets, but it probably will never be a major textile fiber in Iraq, because of climate considerations. Any future increase in textile-fiber consumption (and there should be a continuing increase as living standards rise) will probably be in cotton, rayon, or synthetic fibers. Experience over the past five years indicates, however, that the consumer preference in Iraq has been for rayon; this will probably remain the case in the near future. The market for synthetic fibers, such as nylon, will be limited because of their high price.

An extrapolation to 1960 of the consumption figures for Iraq for the past five years indicates that total rayon consumption in 1960 will be about 16,500 tons, or a per capita consumption of 2.68 kilograms, based on a population of 6.1 million. This figure may be higher than will be actually realized, since it assumes that the recent high rate of growth of rayon consumption will continue. It does, however, provide an order-of-magnitude estimate of the possible size of the future rayon market in Iraq. On the assumption that the ratio of viscose to acetate rayon consumption will not change, about 1650 tons of acetate will be required. If the same percentages of the fabrics were woven from filament yarn and staple fiber as at present, requirements would be about 11,500 tons of filament yarn and 5000 tons of staple fiber.

TABLE 4
PER CAPITA CONSUMPTION OF MAJOR TEXTILE FIBERS
(KILOGRAMS)

FIBER	UNITED KINGDOM 1951	WORLD 1951	IRAQ 1951	IRAQ 1954
COTTON	7.4	2.95	1.6	1.2
WOOL	2.3	0.42	0.06	0.08
RAYON	2.7	0.74	0.57	1.4
TOTAL	12.4	4.11	2.23	2.68

SOURCE: United Kingdom: Quarterly Statistical Bulletin, International Cotton Advisory Committee.

World: Reports of Food and Agricultural Organization (FAO) of the United Nations.

Iraq: Arthur D. Little, Inc., estimate from import and local consumption figures.

Staple fiber consumption, however, and particularly viscose staple fiber, has increased markedly in world markets in the past 10 years, as shown in Table 5. It is conceivable, therefore, that the ratio of filament to staple fiber may shift in the near future in Iraq. No figures are available to indicate the trend of consumption of the two fibers here.

The rapid expansion of viscose staple production and of high-tenacity viscose yarn has resulted in acetate rayon representing a smaller portion of total world rayon production during the last five years. Using the ratio of acetate to viscose for producers' deliveries in the United States, the following ratios result:

ACETATE: VISCOSE IN UNITED STATES[1]

	1947	1951	1955
Total (including tire cord)	1:2.5	1:2.1	1:3.1
Filament yarns (textile only)	1:1.3	1:1.0	1:0.9
Staple	1:2.8	1:1.7	1:4.6

1. Based on producers' deliveries in the United States.

The future position of acetate rayon depends upon factors affecting the expansion of the uses of viscose staple and viscose high-tenacity cord. The

TABLE 5

VISCOSE AND ACETATE RAYON: WORLD PRODUCTION AND TRENDS

	PRODUCTION (BILLION POUNDS) 1955	EST. CAPACITY (BILLION POUNDS) 1956	% INCREASE OR DECREASE IN PRODUCTION 1950-1955	1946-1955
FILAMENT YARN				
Acetate	0.4	0.6	-12	+58
Viscose, textile	1.1	1.4	+10	+121
Viscose, High-tenacity	0.8	0.9	+72	
STAPLE				
Acetate	0.1	0.2	-37	+75
Viscose	2.6	3.2	+84	+395
TOTAL				
Acetate	0.5	0.8	-18	+61
Viscose	4.5	5.5	+56	+228

SOURCE: Textile Organon, June, 1956, Textile Economics Bureau, Inc., N.Y., N.Y.

consumption of acetate fabrics depends upon a market for "luxury type" fabrics, which probably will not grow in Iraq sufficiently to alter the current ratio of viscose to acetate appreciably. Since world trends of acetate rayon consumption have been downward and since acetate rayon as a "luxury type" fabric would serve a limited market, it is recommended that acetate production not be undertaken in Iraq, but that attention be directed toward the production of viscose types of rayon.

4. Resources

In order to produce woven rayon fabrics, a supply of rayon yarn is required, either viscose or acetate, depending upon the type of fabric to be produced. This rayon yarn may be imported as filament yarn ready to be woven into fabrics, or as staple fiber to be spun into a yarn prior to weaving. An alternative to importing either type of rayon would be the production in Iraq of filament yarn, staple fiber, or both. As indicated in the discussion of rayon markets, the largest proportion of rayon imported is woven rayon fabric; relatively small amounts of rayon are presently woven in Iraq.

To use imported rayon filament yarn to produce woven fabrics, a weaving mill with suitable looms is required. To use rayon staple fiber, it is necessary to have facilities for spinning the fiber into yarn (this can be done in a textile-spinning plant that produces cotton yarn), and a weaving mill to weave the spun rayon yarn (this can be done in a cotton-weaving mill).

In order to produce rayon as either filament yarn or staple fiber (either viscose or acetate), a chemical process is required, whereby cellulose, from a source such as wood pulp or cotton linters, is converted by

chemical treatment to rayon. The raw materials required to produce rayon are as follows:

a. Cellulose

The usual cellulose source is either wood pulp or refined cotton linters. Iraq has inadequate forest resources to supply the amount of wood required (about 2.5 tons of suitable timber would be needed for each ton of rayon produced). It will be at least 10 years before the effects of Iraq's current program of afforestation can materially effect this position. Iraq similarly has an inadequate supply of cotton to provide the required amount of cotton linters. Only about 3% of the required cotton linters could be supplied domestically.

It is possible that Iraq has in the reeds growing in the Basra area a source of cellulose for rayon production. At present, insufficient data exists to determine whether a pulp of adequate quality for rayon production could be produced economically from the reeds, but when a paper mill based on reeds has been established, experimental work can proceed to evaluate this possibility.

To obtain the amount of cellulose necessary for the operation of a plant to produce rayon yarn and staple fiber, it would, therefore, be necessary, at least initially, to import bleached chemical wood pulp available on the world market. About 1.1 tons of wood pulp will be required per ton of rayon produced.

b. Caustic Soda

Until manufacture of caustic soda begins in Iraq, it will be necessary to import it. About 1.25 tons of 76% caustic soda is required per ton of rayon produced.

c. Sulfuric Acid

About 1.45 tons of 93% sulfuric acid would be required for each ton of rayon produced. Although small amounts of this acid are now produced in Iraq by the oil refineries, the acid thus produced is required in their operations, and it would probably be necessary to import the acid required until production begins elsewhere in Iraq. If a fertilizer plant is erected, facilities for the production of sufficient sulfuric acid for rayon manufacture should be included with the plant. If a fertilizer plant is not erected, it would be necessary to erect a separate sulfuric acid plant with a daily capacity of 50 tons, at a total capital cost of about ID 240,000. This plant would produce sulfuric acid at a cost of about ID 8/500 per ton.

d. Carbon Bisulfide

A small plant to supply the requirements of carbon bisulfide for a viscose rayon plant would have to be erected as part of the rayon plant. Uses

of carbon bisulfide are limited primarily to the manufacture of rayon and the manufacture of carbon tetrachloride.

e. Zinc Sulfate

The small amounts of zinc sulfate required, 0.15 tons for each ton of rayon produced, would have to be imported.

5. Manufacture of Rayon and Production of Fabrics

In discussing a rayon industry for Iraq, it is necessary to distinguish between the manufacture of the rayon filament yarn or staple fiber, and the production of rayon fabrics from yarn or fiber. The process for the manufacture of the yarn or fiber is a chemical one, wherein cellulose is converted to rayon by treatment with chemicals. The production of rayon fabrics from the filament yarn or the spun staple fiber is, on the other hand, a textile operation, similar to the production of cotton fabrics.

Vertically integrated textile units that start with a basic raw material and convert it to rayon and ultimately to a finished fabric are very unusual, because they offer no economic advantage. It is therefore the usual practice to separate the manufacture of rayon filament yarn and staple fiber from the spinning, weaving, and subsequent finishing operations. The operation, management techniques, labor supply, and raw material requirements for the chemical operation are distinctly different from those of the textile operation. It is also possible to carry out printing, dyeing, and finishing operations at a separate location from spinning and weaving operations. Combination of these two operations again offers no particular economic advantage or disadvantage, and the choice between separate or joint location depends almost entirely on such factors as labor availability, transportation, and proximity to market areas.

The establishment of the chemical portion of the rayon industry would make possible the establishment of other chemical industries, since it would be a major consumer of their products. In the case of caustic soda, which rayon manufacture requires in large amounts, the rayon industry would be the largest user for some time to come. The size of the caustic soda plant recommended for establishment elsewhere in this report, is determined principally by the rayon industry's consumption. In addition, the need for pulp for rayon manufacture will encourage efforts to produce a satisfactory pulp from the reeds near Basra, thus offering possibilities of expansion of pulp manufacture.

Because the manufacture of rayon is distinctly different from the weaving of the fabrics, these two portions of the industry should be considered separately and established as separate projects. Further, because the chemicals required by a rayon-manufacturing plant are also used by other industries, the production of these chemicals (sulfuric acid and caustic soda) should be considered separately and not as part of the rayon industry. One

exception to this important principle is the manufacture of carbon bisulfide, which because of its very limited use in Iraq should be established as part of the rayon plant.

a. Manufacture of Viscose Rayon

(1) Filament Yarn. The chemical pulp, after preparation by proper chemical treatment, is treated with carbon bisulfide and converted to an intermediate compound called cellulose xanthate. This intermediate compound is dissolved in caustic soda solution of specified strength, resulting in a viscous solution from which the name "viscose" rayon is derived. This solution, after filtration, storage, and aging, is used to spin viscose yarn.

In the spinning operation, the viscose solution is pumped to a spinneret (a small nozzle containing many minute holes) immersed in a bath containing water, sulfuric acid, sodium sulfate, and other ingredients. As the viscose solution enters this bath, the fine streams of fluid coagulate instantly into filaments of viscose yarn, which are then wound, dried, washed, bleached, and put on spools. The filaments are collected on bobbins or in centrifugal pots, and periodically removed. The yarn is then given a series of treatments, such as desulfuring, washing, bleaching, drying, and packaging. At the conclusion of these operations, a rayon filament yarn is available for use by the textile industry.

(2) Staple Fiber. In the production of staple fiber, the chemical stages in the manufacturing process are essentially the same as those for filament yarn, although slightly smaller quantities of raw materials are required per pound of rayon produced. The basic difference between viscose filament yarn and viscose staple fiber appears at the spinning stage. Unlike the process of filament manufacture, where the filaments are collected on bobbins or in centrifugal pots and periodically removed, in the manufacture of staple fiber, the filaments are carried along to the end of the spinning machine to form a continuous "tow" or "rope" of filaments. (The spinnerets used in the manufacture of staple fiber contain a substantially greater number of holes than those used in the manufacture of filament yarn.) The " tow" of filaments is then cut into staple lengths of the size desired, washed, desulfured, bleached, and dried, although the cutting may follow these treatments instead of preceding it. The lengths of staple fiber are then ready for spinning into a rayon yarn, commonly known as spun rayon yarn.

b. Production of Rayon Fabrics

(1) Spinning. In this operation, the staple fiber received from the rayon-manufacturing plant is spun into yarn in much the same way as cotton is spun into yarn. The spinning operation, which requires special equipment, represents one step in the preparation of staple fiber into a yarn for weaving, and is normally carried out adjacent to the weaving operation. Some spinning of rayon staple fiber into yarn is already taking place in Iraq-for example, at the Iraq Spinning and Weaving Company. The principal consumer fabrics

made from spun rayon yarn are apparel fabrics for men's and women's wear as well as such household products as blankets, rugs, and draperies. Blends of rayon and cotton and rayon and wool can be used in manufacturing fabrics.

(2) **Weaving.** In the weaving mill, rayon yarn, either filament yarn or that spun from staple fiber, is woven on looms into rayon fabrics. The operation is similar to that for cotton. Both types of rayon yarn must be prepared for weaving in a series of operations known as throwing, doubling, warping, and filling, before delivery to the looms. These operations are considered as part of a weaving mill's usual function and should not be conducted separately. It would also be possible to produce fine-count cotton fabrics in such a rayon mill, since this type of cotton fabric is not now produced in Iraq. Because of the limited market for this luxury type of fabric and because the cotton required is not grown in Iraq, it is recommended that rayon fabrics only be produced.

(3) **Finishing.** Printing, dyeing, and finishing operations are necessary to prepare various types of woven fabric for distribution and sale. Equipment is needed for bleaching, purifying, dyeing, printing, and finishing. In plants where long runs of fabrics are common, roller printing machines are normally used, while plants where production is characterized by short and varied runs find that the screen printing method requires far less capital expenditure and is more flexible than roller printing, although operating costs are somewhat higher. Finishing operations are carried out in the textile mills now operating or being constructed in Iraq, and although separation is economically and technically possible, no case of separation from weaving facilities is known to exist at this time.

In many countries, the establishment of a modern rayon textile industry has started with the construction of facilities to perform the finishing operations on imported unfinished cloth. The spinning and weaving mills have then been erected and the plant to produce rayon constructed when the market for its output has been established. It is believed that Iraq's rayon industry should be developed along similar lines, but that its growth can be speeded somewhat because of the present existence of small facilities for producing rayon fabrics from imported filament yarn and staple fiber, and because of the large market for rayon fabrics.

It is considered that the local market could absorb an additional 25 million square yards of domestically made rayon fabrics each year, and the necessary spinning, weaving, and finishing facilities could be assembled in one large plant. This is not, however, recommended, because it would impose severe management and labor-training problems and create a semimonopolistic organization. Although the investment cost is a little higher, it is recommended that two separate plants be established. In this way management and labor problems can be reduced to a minimum and the foundation of a competitive industry laid.

6. Costs and Investment

Estimates have been prepared for the investment and operating costs

of rayon-producing and rayon textile facilities, to indicate the magnitude of the expenditure required and to evaluate the economics of producing, spinning, and weaving rayon in Iraq. The estimates are the result of extensive discussions with organizations and persons familiar with the construction and operation of rayon facilities. The costs to be discussed here and detailed in Tables 6 through 14 are based on experience in other countries, but have been modified where possible to suit Iraq's conditions. The investment costs are based upon U.S. experience and cost-estimation practices, but have been reduced slightly to account for the fact that purchase of the equipment from countries closer to Iraq will probably result in the lower costs shown. It is possible that even lower investment costs may result, but since this is not certain, the more conservative investment costs have been used.

a. Rayon Production

The costs for two alternative plants to manufacture rayon from imported chemical pulp have been evaluated, one to produce annually 10 million lb (4500 metric tons) of viscose rayon filament yarn, the other to produce annually 7 million lb (3150 metric tons) of viscose rayon filament yarn and 3 million lb (1350 metric tons) of viscose rayon staple fiber. For convenience of discussion, the first plant is referred to as Project I, the second plant as Project II.

The estimated total capital requirements for Project I (see Table 6) are about ID 4,389,000, of which ID 3,929,000 would represent fixed capital, and ID 460,000 would represent working capital. The estimated cost to produce filament yarn in this plant would be about ID 0.192 per pound (including interest charges but excluding profits), which compares with the average landed cost (exclusive of import duty and importers' profits) of ID 0.208 for yarn presently imported. The cost of ID 0.208 represents an average cost for various deniers; the range of costs of imported yarn is ID 0.140 to ID 0.364. The estimate assumes that power will be available at the location site at a cost of 2 fils per kilowatthour. If power were not available at the plant site, the investment cost would be increased by about ID 630,000.

The estimated total capital requirements for Project II (see Table 9) are about ID 3,905,000, of which ID 3,445,000 would be for fixed capital and ID 460,000 would be for working capital. It is difficult in this case to separate, for purposes of estimation, the actual cost of production for the filament yarn and the staple fiber, since an allocation of investment costs is required. For this reason, the estimated total annual production costs at full capacity have been calculated and these costs compared with the costs of importing the equivalent amounts of yarn and staple fiber. Based on these calculations, the estimated annual cost to produce 7 million lb of filament yarn and 3 million lb of staple fiber (see Table 11) would be ID 1,709,025 (including interest charges but excluding profits). Based on the average landed import costs of filament yarn and staple fiber of ID 0.208 and ID 0.110 per pound, respectively, the total annual import cost (exclusive of

import duty and importers' profits) would be ID 1,786,000. As in the case of Project I, the above estimates assume that electric power would be available at the plant site at a cost of 2 fils per kilowatthour. If power were not available, the investment cost would be increased by about ID 500,000.

In both estimates, it has proven difficult to estimate in detail the supervision and labor overhead costs for a mill in Iraq. For this reason a percentage of labor costs has been used to estimate the cost. Detailed estimating may reduce these cost factors.

The costs derived from the estimates indicate that Iraq can produce rayon at a cost slightly below that of imported yarn and fiber, in spite of the fact that the landed import costs are extremely low when compared with costs elsewhere. Whether these low costs are due to the fact that the rayon imported is not top quality or whether the low costs are below the average costs of production of the foreign suppliers is not clear at this time, but it may be a combination of both. In either case, the ability to produce rayon at a cost lower than the import cost is noteworthy, particularly since the pulp must be imported.

In view of the amount of staple fiber now imported by Iraq and the increased growth of staple fiber demand indicated by world trends, it is recommended that the rayon plant to be established be one to permit production of both filament yarn and staple fiber, as outlined in Project II. Over-all investment cost is somewhat less than for a plant producing only filament yarn, and the additional fabrics that can be made from staple fiber will increase the variety of the fabrics that can be produced.

The 1954 consumption of rayon by Iraq's existing textile factories was about 2 million lb of filament yarn and 1 million lb of staple fiber. Thus markets for about 30% of the recommended plant capacity already exist in Iraq, based on 1954 demands of the existing rayon textile facilities. The remainder of the production capacity, 5 million lb of filament yarn and 2 million lb of staple fiber, equivalent to a total of about 25 million square meters of fabrics, would be used by the textile plants recommended for establishment. This amount of rayon represents about one-half the 1954 total fabric imports and about one-quarter of the total fabric consumption that will result in 1960 if present trends continue.

b. Rayon Textile Mills

Cost estimates have been prepared to show the total capital requirements for the establishment of textile facilities to produce 25 million square meters of fabrics from 5 million lb of filament yarn and 2 million lb of staple fiber. It is recommended that two units be built, one to have weaving and finishing facilities with a capacity of 12.5 million square meters and the other to have facilities for the spinning of 7 million square meters, and the weaving and finishing of 12.5 million square meters of fabrics. Estimated investment requirements for these two units (see Tables 12 and 13) are ID 1,775,500 and ID 2,496,500. Although the total investment of ID 4,272,000 is about 21% higher than the total investment of ID 3,533,000 for one unit (see

Table 14) with a total spinning capacity of 7 million square meters and a weaving and finishing capacity of 25 million square meters, the advantages of two mills are believed to outweigh the additional cost. On the other hand, establishment of a larger number of smaller units is considered undesirable, since the mills would be too small to permit the economies of large mill operation. It is not possible to provide complete estimates of the costs of spinning and weaving rayon fabrics, because these costs depend to a large degree on the types of fabrics that are actually produced and on the ultimate level of productivity that labor can achieve, that is, on how many looms each worker can learn to operate efficiently. It is possible, however, to provide order-of-magnitude estimates by reference to successful experience of other industrially underdeveloped countries.

The estimates of investment costs that have been prepared for the textile mills have been based on the use of automatic looms. Only in this way can labor productivity in Iraq ever reach a sufficiently high level to assure successful competition with countries that have well-established textile industries. Experience in other countries of the Near and Far East has shown that the installation of automatic textile equipment is essential if the necessary level of labor productivity is to be achieved.

In addition to the installation of automatic looms, it will be necessary to devote considerable time and money to the training of workers to enable them to achieve a high degree of productivity. Although actual figures cannot be estimated at this time to indicate the number of looms that Iraqi textile workers can be expected to handle, experience elsewhere can be used as a guide to provide order-of-magnitude costs for textile mill operation.

Experience elsewhere in the Near and Far East indicates that after considerable training, it would not be unrealistic to expect one skilled weaver to handle 16 automatic looms; ultimately this should rise to at least 24 looms. These estimates are conservative, and substantially better results may be possible. For example, a recently established cotton mill in Turkey is now operating at a rate of 50 looms per weaver. Loom fixers, after proper training, should be able to handle 40 looms, with up-grading to 60. It is estimated that total labor costs in the textile mills proposed in this report will eventually be no higher than 7 - 9 fils per square meter.

In determining the effect that raw material costs will have on the finished-fabric cost, it is possible to use only an average weight of rayon yarn or fiber per square meter, but raw material costs in Iraq would be of the order of 58 - 68 fils per square meter. Other costs, including maintenance and interest on capital, will be of the order of 15 - 18 fils per square meter, resulting in a total production cost of 80 to 95 fils per square meter. This compares favorably with the average landed costs of the fabrics listed in Table 3 - 85 fils per square meter. The maintenance of the present tariff rates, which together with wholesaling expenses and profit raise the average price charged to the retailer to 136 fils, would ensure very satisfactory financial results. On the other hand, because of the very low cost of imports, rayon production in Iraq seems unlikely to show a very high real return

on the investment involved. Nevertheless, it is recommended that the industry be established immediately. The following considerations lie behind this important recommendation:

1. There is a good chance that after the first few years of operation costs of production can be reduced to that of imported rayon fabrics, and may, with proper training and efficient management, fall somewhat below them.

2. With the exception of the pulp, which may ultimately be procurable from indigenous reeds, very small quantities of raw materials would have to be imported for rayon and rayon fabric manufacture. Iraqi labor, materials, and capital can be brought into employment to produce an important product for the local market.

3. The establishment of a rayon textile industry and later of a rayon chemical plant would permit the medium-scale production of caustic soda and chlorine, which latter material could be used in a plastic industry that would provide an attractive and profitable use for natural gas. A domestic market for Iraq's sulfur supplies would also be created. In fact, the economic development of Iraq's valuable chemical resources can be greatly advanced by the establishment of a rayon industry.

7. Special Problems and Considerations

a. Customer Acceptability and Foreign Competition

There will probably be a reluctance on the part of local consumers to accept fabrics manufactured in Iraq, particularly during the initial operation period of new rayon textile facilities. The competition from low-priced Japanese fabrics will present a serious problem to the industry, particularly during its early stages of growth. Operation of the rayon plant at a small profit margin in order to provide cheap filament yarn and staple fiber would encourage the use of the rayon by domestic textile mills and would enable these mills to produce fabrics at a low cost, encouraging customer acceptance.

b. Labor

The degree of skill required by even the common operator in a rayon textile mill necessitates a long training program. Iraq currently has 4000-5000 persons employed in textile mills, most of whom have been trained by the existing industry. The training of a labor force for the recommended rayon plants will require a great deal of time, planning, and expense. Labor cost is an important item in the cost of producing rayon fabrics and is subject to a wider variation than raw material costs; to be able to compete with low-cost imported goods, it will be necessary to reach high levels of productivity.

The development of a skilled labor force will require time and must be spread over a period of years, to prevent disrupting the existing textile labor and to prevent difficulties that would result from the competitive bidding for the services of labor already trained or under training.

c. Plant Location

The plant to produce the viscose rayon should be located near Basra, since the principal raw materials will be most readily available there. The caustic soda, for example, will be manufactured in this area, and until manufacture begins imported supplies will be landed at Basra. If future research confirms that reeds can be used to produce a satisfactory pulp, the pulp will also be available near Basra.

The location of the textile mills should probably be in an area between Baghdad and Basra - for example, at Kerbala or Hilla. Since labor may be difficult to obtain in either Basra or Baghdad, it would be preferable to locate the plants where there would be adequate labor and a substantial market. Location in the Mosul area is not recommended, since much of the textile output from that area is now sent to Baghdad because of inadequate local markets. Further increased costs would be incurred in transporting the yarn or fiber 400 miles from Basra and then carrying the finished fabric back to the various markets.

Consideration has been given in this investigation to the possibility of using some of the facilities of the Mosul Textile Mill. If excess capacity should arise, an expenditure of about ID 55,000 would probably permit the finishing of 8000-10,000 yards of rayon per day, but because of other location factors, the establishment of finishing facilities with each of the two mills is preferable. This should be borne in mind, however, for future consideration if excess capacity becomes available at the Mosul Textile Mill when additional rayon-finishing facilities are required.

d. Printing Equipment for Finishing Plant

In the estimates for the cost of the finishing plants, allowance has been made for the installation of continuous roller printing equipment and a small allowance for screen printing equipment. If at the time that detailed specifications are prepared it appears that finishing operations are to take place on short runs of fabrics, the use of screen printing to replace the continuous roller printing equipment should be evaluated. Screen printing is more suitable to short production runs and is much less expensive to install than roller printing equipment. Operating costs are slightly higher than continuous printing because of the short runs, but this is usually offset by the reduced investment cost. It is estimated that total capital costs of each finishing plant could be reduced by about ID 20,000.

e. Pricing Policy of Rayon Yarn and Fiber

The estimates that have been prepared indicate that it is possible to produce rayon filament yarn and staple fiber in Iraq at costs slightly below the present cost of imports. No attempt has been made to determine the prices at which the yarn and fiber should be charged to the textile plant, but the pricing policy finally selected should provide the yarn and fiber to the textile mills at a cost that is no higher than the mills now pay for im-

ported materials.

8. Priority

The two sections of the rayon industry are entirely separate and distinct, and it is recommended that the two segments of the industry be established separately. The textile section should be regarded as a consumer of the rayon plant's output. Although it would be possible to construct both sections simultaneously, it is recommended that the rayon mills be established at least one or two years in advance of the rayon plant. During the interim period, rayon fiber and yarn can be imported and the danger of an underemployed or idle rayon chemical plant that would arise from a delay in constructing the textile mills avoided. Serious economic loss would also be incurred if the initial demand from the mills failed to amount to the rayon plant's planned output because of low productivity in the early stages.

TABLE 6

Approximate Capital Requirements for Plant to Produce 10 million lb per year of Viscose Rayon Filament (Project I)

ITEM	COST (ID)
Equipment and Machinery for the Production of Rayon Filament Yarn, to include the facilities discussed in Table 7	2,850,000
Freight and Insurance	144,000
Erection of Equipment	207,000
Land and Development	25,000
Buildings	703,000
Total Fixed Capital	3,929,000
Working Capital	460,000
Total Capital Requirements	4,389,000

TABLE 7

FACILITIES FOR PRODUCTION OF VISCOSE RAYON FILAMENT YARN

(Project I)

1. Caustic Department: for preparation, storage and recovery of caustic soda.

2. Storage Facilities: for sulfuric acid, carbon bisulfide, finishing solutions, and other liquids required in the process.

3. Alkalization and Viscose Preparation: to permit alkalization of the pulp, the preparation of alkali-cellulose for dissolving, the dissolving of the pulp into viscose, viscose storage, ripening, filtration, and preparation.

4. Filament Spinning Department: to include the spinning machines, the installation for jet cleaning and inspection, and the storage of cakes.

5. Aftertreatment of Cakes (or Bobbins): to consist of a continuous aftertreatment installation, complete with storage tanks, circulating pumps, and piping.

TABLE 7 (Continued)

6. Tunnel Dryers: to dry the purified cakes.

7. Spinbath Department: to include storage, makeup, and distribution of spinbath solution, recovery of acid, Glauber salt, and the conversion of Glauber salt into an anhydrous sodium sulfate.

8. Refrigeration, Air-Conditioning, and Ventilation.

9. Textile Department: with equipment for coning and winding the yarn.

10. Electrical Facilities: to include frequency changers, low-tension distribution system inside the plant, and panel boards and wiring for power, but excluding high-tension distribution, substation or transformers, and lighting installation.

11. Control Laboratory: to control the process and the quality of the product produced.

12. Piping: both lead and stainless steel required inside the plant, but excluding sewer or sanitary piping. Lead sheets required for tank linings included.

13. Spare Parts: for one year's operation, based on experience elsewhere and considering normal wear and tear.

14. Water-Purification Plant: to coagulate, filter, and soften the water required by the rayon plant, including all pumps except the pump delivering the untreated water to the coagulator.

15. Carbon Bisulfide Plant: to produce the carbon bisulfide required for the rayon operation, from charcoal and sulfur. Facilities include oil-fired furnaces or retorts, distillation equipment to refine the crude carbon bisulfide, and equipment to recover the solvent.

TABLE 8

COST OF PRODUCING RAYON FILAMENT YARN (PROJECT I)

Plant Investment: ID 3,929,000
Production: 10 million lb per year
Operation: 330 days per year, three 8-hour shifts per day

ITEM	UNITS	ID PER UNIT	UNITS PER POUND	COST (ID PER POUND)
Raw Materials				
Caustic soda (76%)	Pounds	0.0104	1.25	0.0130
Sulfuric acid (66 Bé)	Pounds	0.0041	1.45	0.0059
Pulp, chemical	Pounds	0.0390	1.10	0.0430
Carbon bisulfide	Pounds	0.0070	0.38	0.0027
Zinc sulfate	Pounds	0.0372	0.15	0.0056
				0.0702
Utilities				
Power	KWH	0.002	3.86	0.0077
Water	1000 gal	0.018	0.145	0.0026
Steam	1000 lb	0.135	0.045	0.0061
				0.0164
Labor				
Skilled	Man-hr	0.125	0.0485	0.0061
Unskilled	Man-hr	0.075	0.211	0.0158
				0.0219
Supervision				
30% of Direct Labor	-	-	-	0.0066
Overhead				
20% of Labor & Supervision				0.0057
Maintenance				
5% of Installed Equipment Cost (ID 3,201,000)				0.0160
Depreciation				
8% of Total Fixed Capital (ID 3,929,000)				0.0314
Insurance, etc.				
1.5% of Total Fixed Capital				0.0059
Total Production Cost per Pound of Filament Yarn (excluding interest on capital)				0.1741
Interest on Total Capital at 4% (ID 4,389,000)				0.0176
Total Production Cost per Pound of Filament Yarn (including interest)				0.1917

TABLE 9

Approximate Capital Requirements for Plant to Produce 7 million lb Per Year of Viscose Rayon Filament Yarn and 3 million lb Per Year of Viscose Staple Fiber (Project II)

ITEM	COST (ID)
Equipment and Machinery for the Production of Rayon Filament Yarn and Staple Fiber, to Include the Facilities Discussed in Table 10.	2,430,000
Freight and Insurance	119,000
Erection of Equipment	178,000
Land and Development	25,000
Buildings	693,000
Total Fixed Capital	3,445,000
Working Capital	460,000
Total Capital Requirements	3,905,000

TABLE 10

FACILITIES FOR PRODUCTION OF VISCOSE RAYON FILAMENT YARN AND STAPLE FIBER

(Project II)

1. Caustic Department: Same as under Project I.
2. Storage Facilities: Same as under Project I.
3. Alkalization and Viscose Preparation: Same as under Project I.
4. Filament Spinning Department: to be equipped with fewer spinning machines than in Project I, but in addition to the spinning machines, will include a staple fiber unit to produce 8500 lb of staple per day, the unit to be an integrated production unit.
5. Aftertreatment of Cakes: This department to be smaller than in Project I.
6. Tunnel Dryers: This department to be smaller than in Project I.
7. Spinbath Department: Same as under Project I.
8. Refrigeration, Air-Conditioning, and Ventilation: Same as under Project I.
9. Textile Department: This department to be smaller than in Project I.
10. Electrical Facilities: Smaller frequency changer than in Project I.
11. Control Laboratory: Same as under Project I.
12. Piping: Only minor changes from Project I.
13. Spare parts: Spare parts for staple fiber unit to be added.
14. Water-Purification Plant: Same as under Project I.
15. Carbon Bisulfide Plant: Same as under Project I.

TABLE II

COST OF PRODUCING RAYON FILAMENT YARN AND STAPLE FIBER

(Project II)

Plant Investment: ID 3,445,000
Production: 7 million lb per year of filament yarn.
3 million lb per year of staple fiber.
Operation: 330 days per year, three 8-hour shifts per day.

Variable Operating Costs			Filament Yarn		Staple Fiber	
Item	Units	ID Per Unit	Units Per Pound	ID Per Pound	Units Per Pound	ID Per Pound
Raw Materials						
Caustic soda	lb	0.0104	1.25	0.0130	1.20	0.0125
Sulfuric acid	lb	0.0041	1.45	0.0059	1.40	0.0057
Pulp, chemical	lb	0.0390	1.10	0.0430	1.05	0.0410
Carbon bisulfide	lb	0.0070	0.38	0.0027	0.35	0.0025
Zinc sulfate	lb	0.0372	0.15	0.0056	0.10	0.0037
				0.0702		0.0654
Utilities						
Power	KWH	0.002	3.86	0.0077	1.140	0.0023
Water	1000 gal	0.018	0.145	0.0026	0.120	0.0023
Steam	1000 lb	0.135	0.045	0.0061	0.040	0.0054
				0.0164		0.0100
Labor						
Skilled	Man-hr	0.125	0.0485	0.0061	0.0088	0.0011
Unskilled	Man-hr	0.075	0.211	0.0158	0.0352	0.0026
				0.0219		0.0037
Supervision						
50% of Direct Labor				0.0066		0.0011
Overhead						
20% of Labor & Supervision				0.0057		0.0010
Total variable costs per pound product				0.1208		0.0812
Total annual variable costs at full capacity				ID 845,600		ID 243,600
Fixed Costs						
Maintenance						
5% of installed equipment cost (ID 2,727,000)						ID 136,350
Depreciation						
8% of total fixed capital (ID 3,445,000)						ID 275,600
Insurance, etc.						
1½% of total fixed capital (ID 3,445,000)						ID 51,675
Interest on Capital						
4% of total capital requirements (ID 3,905,000)						ID 156,200
Total annual fixed costs						ID 619,825
Total Annual Operating Costs = 619,825 + 845,600 + 243,600 =						ID 1,709,025

TABLE 12

Approximate Fixed Capital Requirements for a Rayon-Weaving Mill to Produce 12.5 million Square Meters of Fabrics, Together with Finishing Facilities to Process 12.5 million Square Meters

ITEM	COST (ID)
Equipment and Machinery to Perform:	
Doubling and throwing	244,000
Weaving	481,000
Warping and filling	74,000
	799,000
Freight, Insurance, and Equipment Erection	120,000
Buildings and Warehouses	386,000
Total Fixed Capital This Portion	1,305,000
Finishing Equipment to Perform Bleaching and Purifying, Dyeing, Continuous Printing, Screen Printing, and Finishing	296,000
Freight, Insurance, and Equipment Erection	44,000
Boiler	22,500
Building	88,000
Total Fixed Capital This Portion	450,500
Land and Development	20,000
Total Fixed Capital for Entire Installation	1,775,500

TABLE 13

Approximate Fixed Capital Requirements for Rayon Spinning and Weaving Mill to Spin 7 million Square Meters and to Weave and Finish 12.5 million Square Meters of Fabric.

ITEM	COST (ID)
Spinning Equipment	515,000
Freight, Insurance, and Equipment Erection	77,000
Buildings	129,000
Total Fixed Capital This Portion	721,000
Weaving Equipment and Machinery to Perform:	
Doubling and throwing	244,000
Warping and filling	74,000
Weaving	481,000
	799,000
Freight, Insurance, and Equipment Erection	120,000
Buildings and Warehouses	386,000
Total Fixed Capital This Portion	1,305,000
Finishing Equipment to Perform Bleaching and Purifying, Dyeing, Continuous Printing, Screen Printing, and Finishing	296,000
Freight, Insurance, & Equipment Erection	44,000
Boiler	22,500
Building	88,000
Total Fixed Capital This Portion	450,500
Land Development	20,000
Total Fixed Capital for Entire Installation	2,496,500

TABLE 14

Approximate Fixed Capital Requirements for Plant to Spin, Weave, and Finish 25 million Square Meters of Fabrics from 5 million lb of Filament Yarn and 2 million lb of Staple Fiber.

ITEM	COST (ID)
Equipment and Machinery to Perform:	
Spinning	515,000
Doubling and throwing	425,000
Warping and filling	129,000
Weaving	837,000
Finishing	514,000
	2,420,000
Freight, Insurance, and Equipment Erection	362,000
Land and Development	20,000
Buildings	731,000
Total Fixed Capital	3,533,000

C. Production of Caustic Soda and Chlorine

1. Introduction

An investigation has been conducted into the feasibility of producing caustic soda in Iraq to supply the small current demand for this product and the greatly increased usage that would result from the establishment of the rayon plant and the paper mill recommended elsewhere in this report. Although several production processes are available, the only one economically suitable for Iraq (the electrolytic process) produces chlorine simultaneously and in fixed and almost equal proportions. The evaluation has therefore of necessity considered the two products together.

When two products are produced in unalterable ratios, it is not possible to assign a cost of production to either product separately. If markets do not exist for one of the two joint products, the other product must bear the entire costs of manufacture. In the case of caustic soda and chlorine, if either product had to bear the entire cost, production would be uneconomical. Markets for chlorine in Iraq are currently almost non-existent, but recommendations have been made elsewhere in this report for the production of polyvinyl chloride, a widely used and versatile plastic, the production of which would consume almost all of the chlorine produced. In this way, a revenue would be realized from the chlorine output and the production of both caustic soda and chlorine would become economically attractive.

2. Recommendations

1. A plant with a capacity to produce 10,000 metric tons of 100% caustic soda and 8315 metric tons of liquefied chlorine annually by the electrolytic process should be established in the Basra area. The implementation of this recommendation should be contingent upon the erection of a large chlorine-consuming plant (such as one for the production of polyvinyl chloride, discussed elsewhere in this report) to provide an outlet for chlorine.

2. Funds should be provided to the Geological Department of the Ministry of Economics to investigate a potential salt deposit at Basra. A ground deposit of salt, the principal raw material of caustic soda production, is generally preferred as a source of supply to salt obtained by solar operation. At present, however, the only proven sources of salt in Iraq are the solar-evaporation operations, the major one being at Fao. The possibility of salt deposits at Basra is indicated by the presence of a salt plug, known to the Geological Department. Drillings and analysis are needed to determine the extent and quality of this deposit.

3. In the event that a ground salt deposit of adequate capacity is not proven at Basra, steps should be taken to triple the capacity of the solar-evaporation operation at Fao. Specific action necessary is outlined in this report section.

4. Production of caustic soda in the amount required in Iraq, by processes such as the Solvay Process and the Gluud and Loepmann Process (alternate methods of producing caustic soda without producing chlorine) should

not be attempted. The usual minimum economic plant size is extremely large (60,000 tons per year of soda ash, the intermediate product in these processes) and 80%-90% of the output would have to be exported.

3. Markets for Caustic Soda and Chlorine

a. Caustic Soda

Caustic soda is currently imported by Iraq for soap manufacture, vegetable-oil manufacture, and oil-company use. The amount imported is small and has remained at about the same level during the past five years. Table 15 indicates the imports of caustic soda for the years 1950 through 1954. Table 16 shows an estimated breakdown of current uses of caustic soda in Iraq.

TABLE 15

IRAQ IMPORTS OF CAUSTIC SODA

YEAR	METRIC TONS	VALUE (ID)
1950	1105	22792
1951	935	31289
1952	1646	64633
1953	1061	35698
1954	1125	36241
Average 1950-1954	1175	

SOURCE: Department of Customs and Excise.

TABLE 16

BREAKDOWN OF IRAQ USAGE OF CAUSTIC SODA

USER	ESTIMATED % OF IMPORTS	ESTIMATED ANNUAL USE, CURRENT METRIC TONS
Soap Manufacture	45	500
Oil Companies	27	300
Vegetable Oil Refining	8	90
Oil Refineries	6	70
Miscellaneous	14	165
	100	1125

SOURCE: Arthur D. Little, Inc., estimate.

Future markets for caustic soda in Iraq will depend primarily upon industries not yet established. Use of caustic soda by the soap and vegetable-oil industry and the oil companies might reach a total of 2000 metric tons per year by 1960, particularly if the soap and vegetable-oil production can be expanded to full capacity. The Dora Refinery expects to use 30 tons of caustic soda per year and the bitumen refinery will also probably be a small user.

The largest potential consumer of caustic soda in Iraq, and one requiring a high-quality product, would be the rayon plant, establishment of which is recommended elsewhere in this report. This plant would use 4260 tons

of 100% caustic soda annually. The paper mill that is also recommended for establishment would consume 1360 tons of caustic soda annually. Thus, the total potential market for 1960, based on foreseeable consumers, would be:

Use	Tons
Rayon Production	4,260
Paper Manufacture	1,360
Vegetable Oil, Soap, Refineries, etc.	2,000
	7,620

b. Chlorine

There are, at present, almost no markets for chlorine in Iraq. About 100 tons per year is imported for use in water purification; a small amount is used by the Iraq Spinning and Weaving Company for bleaching cotton, but this small amount is produced by the company itself. Very little bleach, a widespread use elsewhere for chlorine, is used in Iraq; housewives seem to prefer the bleaching effects of the sun. A small demand for chlorine for the bleaching of pulp for paper and rayon manufacture may eventually arise, but this is not likely to exceed 500 tons annually for many years.

The largest and only substantial use of chlorine in Iraq in the foreseeable future would be for the production of polyvinyl chloride, discussed elsewhere in this report. At the capacity recommended, this plant would consume 6240 metric tons of chlorine annually; without its establishment chlorine consumption would be only about 100-200 tons per year.

4. Resources

The principal raw material for caustic soda manufacture, whether by electrolysis or by caustization of soda ash, is salt, (sodium chloride). It is generally desirable to have available a supply of rock salt cut from a solid deposit, although salt from solar-evaporation sources will serve as a satisfactory source of supply if rock salt is unavailable.

Discussions with the Chief Government Geologist and the reports of Site Investigation, Ltd., reveal that there is no proven source of rock salt in Iraq. According to the Chief Geologist, however, a salt plug exists near Basra that might provide a source of salt. Detailed information is not yet available, since no drilling has taken place because of the lack of funds and the high priority of other work. Drillings should be made on this salt plug to determine the extent of the deposit and the economics of the recovery of the salt. It is recommended, therefore, that funds and manpower be provided to permit the necessary drilling to be done. Provided that adequate salt deposits are proven to exist, it may be considerably cheaper to exploit this deposit than to improve and expand the Fao salt operation. No expenditure, beyond that for exploratory drilling, should be made, however, unless reserves appear adequate to provide 18,000 to 20,000 metric tons per year for at least 10 years.

If this possible salt deposit proves to be inadequate, salt must come

from Fao and similar installations where salt is recovered from sea water by solar evaporation. The operation at Fao presently has a capacity, according to available information, of 8000 to 8500 metric tons per year. Since 1.6 tons of sodium chloride (common salt) is required for each ton of caustic soda (sodium hydroxide) produced, 16,000 metric tons year would be required and it would be necessary to increase the capacity of the Fao salt operation. There are indications that the operation could be expanded to produce about 25,000 metric tons per year. Unless substantial salt deposits are proven, it is clear that, as the present production of the salt operation is already being used in Iraq, expansion would be necessary before a caustic soda plant is established. In this case, competent consultants, experienced in salt recovery by solar evaporation, should be engaged to:

1. Determine the total capacity of salt production that could be achieved at Fao. At least 25,000 metric tons annually should be assured before any sizable caustic soda plant is erected. Unless this is done, its operation would be severely limited and would prove uneconomical.
2. Determine the facilities that should be added at Fao to make the operation an up-to-date and efficient one. Roads, warehouses, and housing are probably needed in this area because of the relatively isolated location of the salt operation.
3. Specify the degree of salt purification required and the methods to be used to attain the required purity.
4. Study the possibility of recovering valuable salts, such as those of potassium, magnesium, and sodium, from the reject concentrates.
5. Draw up specifications for the required changes and additions. A study of this kind would probably cost approximately ID 15,000.

Other raw materials needed in the production of caustic soda are sulfuric acid, graphite, and mercury. Until sulfuric acid, in addition to that now produced by the oil refineries for their own use, is produced in Iraq, it can be imported, as can the graphite and mercury, since comparatively small amounts would be needed.

5. Methods of Producing Caustic Soda

The following discussion of methods of producing caustic soda is quite technical in nature. It is not a detailed analysis of the technical aspects of the processes, but rather a description of the four methods of production that have been considered. It is felt that this discussion is necessary for an understanding of the caustic soda problem. The economics of all four processes for caustic soda production are discussed in greater detail in the section on ''Costs and Investment.''

a. Electrolytic Caustic Soda

The most common method of producing caustic soda, and the only one suitable for Iraq at the present time, is the electrolytic method. In this

method, an electric current is passed through a brine solution to produce, after decomposition of the brine, sodium hydroxide (caustic soda), chlorine, and hydrogen.

There are two major types of electrolytic cells in use today, the diaphragm cell and the mercury cell, and both have advantages peculiar to themselves. The diaphragm type of cell has the advantages of producing a lower-cost caustic soda of 50% concentration than the mercury cell, requiring slightly less power per ton of product and not being affected by small quantities of such heavy metals as vanadium and chromium. Its disadvantages are that diaphragms have a tendency to clog and are sensitive to changes in brine concentration; calcium sulfate must also be removed from the brine before it is fed to the cells. The caustic soda product must be concentrated by evaporation and purified for use with rayon. Mercury cells, on the other hand, having no diaphragms to clog, can use brine with a higher level of calcium sulfate impurity. They produce a rayon-grade caustic soda of 50% concentration directly. The amalgam used in this cell can be used to produce other products, such as sodium sulfide and hydrogen peroxide, if the need arises. Disadvantages of the mercury cell are that the caustic soda produced is slightly more expensive than that produced by the diaphragm cells. The large investment in mercury, a necessary ingredient in this operation, is considered a disadvantage in some cases.

In the diaphragm cell, an asbestos diaphragm separates the graphite anodes from the steel cathode. Under action of direct current, chlorine is liberated at the anodes, while hydrogen gas and sodium hydroxide are formed at the cathode. The liquid leaving the cell analyzes about 11% sodium hydroxide, with about 15% sodium chloride as impurity. Upon evaporation to 50% caustic soda, most of the sodium chloride precipitates, leaving about 1% as impurity.

In the mercury cells, the brine is electrolyzed between graphite anodes and a mercury cathode. Chlorine is liberated at the anode, as in the diaphragm cell, but sodium amalgam is formed at the cathode rather than sodium hydroxide. In a subsequent step, caustic soda and hydrogen are produced by decomposing the sodium amalgam. The caustic soda thus produced is a pure grade of 50% caustic soda containing only about 0.006% sodium chloride. As such, the caustic soda requires no further purification before use in the manufacture of viscose rayon.

Selection of the type most suitable to Iraq's needs would require further study at the time specifications were being drawn up for a plant. The proposed rayon plant would require large amounts of rayon-grade caustic soda. The advantage of obtaining this grade of caustic soda directly from mercury cells at 50% concentration must be weighed against the need, in the case of diaphragm cells, to concentrate from 11% to 50%. The purity of the salt will also be a determining factor in the final selection. For the purposes of economic evaluation, the mercury cells have been selected as the basis. This is done with the realization that additional consideration of the project might indicate the use of diaphragm cells. Nevertheless, if the economics are clearly favorable with the mercury cell, they will also be

favorable with the diaphragm cell, and if the economics are clearly unfavorable with the mercury cell, they will be unfavorable with the diaphragm cell.

The presence of chlorine as a joint product in the production of caustic soda by either electrolytic method has a marked effect on the economics and desirability of production. For each ton of caustic soda produced, about 0.9 ton of chlorine gas is also produced. Chlorine gas is poisonous and difficult to dispose of. Unless markets are available for the chlorine, it is not only extremely uneconomical to produce caustic soda by electrolysis, but also undesirable from pollution and safety standpoints as well. In addition to chlorine a small amount of hydrogen is produced as a by-product (0.023 ton per ton of caustic soda), but this can be vented into the atmosphere and has little effect on the economics of the process.

Because of the chlorine problem, alternate methods of caustic soda production, in which chlorine is not a joint product, have been investigated. The three methods selected were the Solvay Soda Ash Process, the Gluud and Loepmann Soda Ash Process, and the manufacture of caustic soda by the conversion of imported soda ash (sodium carbonate).

b. Solvay Process

In the Solvay Process, salt (sodium chloride) as a saturated brine is reacted with ammonia and carbon dioxide to form sodium bicarbonate and ammonium chloride. The sodium bicarbonate, after filtration, is roasted in a kiln to form soda ash (sodium carbonate) by the removal of water and carbon dioxide. To form caustic soda, the soda ash is reacted with calcium hydroxide. After removal of calcium carbonate, the caustic soda is concentrated by evaporation.

General experience elsewhere has been that the erection of Solvay Process plants are economical only when they have a capacity of 250 to 300 tons per day. However, because of the desirability of such a process for Iraq due to the present lack of chlorine markets, discussions were held with the Solvay Division of Allied Chemical and Dye Corporation to determine whether conditions in this area might justify a smaller plant. These people were of the opinion that the smallest plant justifiable in the Middle East would be one with a capacity of 60,000 tons per year of soda ash. Estimates for small plants are difficult to prepare because of the lack of experience with small-scale equipment, but it is known that the conversions attainable in the chemical reactions decrease with a decrease in plant size, causing costs to rise sharply. An estimate for a small Solvay Process soda ash plant and for caustic soda prepared from this soda ash are shown in Table 19. The costs bear out the fact that manufacture of caustic soda <u>via</u> the Solvay Process is uneconomical for Iraq in the quantities required.

c. Gluud and Loepmann Process

The Gluud and Loepmann Process is basically the same as the Solvay Process. Chemical reactions, raw materials, and products are similar. The process was initially designed to produce ammonium chloride, but can be

modified. Although conversions of the chemical reactions in this process remain high even with a decrease in plant size, the costs of producing caustic soda by this process on a small scale are too high. Details concerning costs and investment are shown in Table 20.

Advantages of the Solvay and Gluud and Loepmann Processes, if they were economical, would be the elimination of chlorine as a joint product and the production of soda ash (sodium carbonate) and bicarbonate of soda (sodium bicarbonate) as by-products. Both of the latter materials are imported by Iraq in small amounts - 200 to 300 tons per year of soda ash and 300 to 400 tons per year of bicarbonate of soda.

d. Conversion of Imported Soda Ash (Sodium Carbonate)

The production of caustic soda by the conversion of imported soda ash would require treatment of the soda ash with a water solution of calcium hydroxide, settling and filtration of the resultant mixture to get a clear solution of caustic soda, and concentration of this caustic soda solution by evaporation. Such a process is technically feasible provided that the cost of imported soda ash is low enough; the production of caustic soda by this method is, however, uneconomical for Iraq.

6. Costs and Investment

a. Electrolytic Process

The estimated investment and operating costs for the production of caustic soda by the four processes discussed in the previous section are shown in detail in Tables 17 through 21. In selecting the capacity of the plant to produce caustic soda, allowance has been made for the foreseeable 1960 market for caustic soda (7620 metric tons) and for possible future increases in consumption that would necessitate renewed imports or the erection of a small, uneconomical plant. On this basis, a capacity of 10,000 metric tons per year is recommended.

The total capital required to erect an electrolytic caustic soda and chlorine plant of this size is estimated to be ID 1,315,800, of which ID 1,280,000 would be permanent investment, and ID 35,800 would be working capital. These costs are based on U.S. practice, adjusted to Iraq conditions, and include provision for the following: equipment and installation cost for brine treatment; mercury cells; electrical equipment; chlorine liquefaction; mercury purification; minimum maintenance shop and storage facilities, provided on a "turn-key" basis. They do not include allowance for chlorine cylinders or other containers; the development of a salt or brine source; a water-pumping or cooling system; a power plant or railroad sidings.

In determining operating costs, it has been assumed that electric power would be available at the plant site at a cost of 2 fils per Kilowatthour. Electric power costs represent one of the most important factors in the production of caustic soda and chlorine, and such plants are usually located in

an area that has cheap electric power.

For purposes of the estimates, all production costs have been expressed on the basis of one ton of product, on the assumption that 18,315 tons of product would be produced annually, 10,000 of which would be caustic soda and 8315 liquefied chlorine. There is no economically justifiable alternative to this procedure, because the proportion in which the two products are produced is unalterable and it is impossible to allocate production costs on a rational basis. On the other hand, the relative selling price of the two products can be rationally determined by reference to the market prices of the products themselves. Unfortunately, in the case of caustic soda and chlorine in the Iraq market, this would be unsatisfactory: the import price of chlorine is very much higher than in countries in which it is manufactured, because of the very considerable transport costs involved. In other parts of the world, chlorine and caustic soda prices are much closer to each other, and in the United States, for example, they are, for large consignments, approximately the same. For this reason, an economic evaluation of the plant has been made on the assumption that both products would be sold at the same price.

On the basis of the above investment costs and assumptions, each ton of caustic soda and each ton of chlorine would cost ID 23/000 to produce and sell. Sale of each product at ID 30/200 per metric ton would provide a 10% return on the total capital invested when operating at full capacity, and a 4% return when operating initially at 80% of capacity. The importance of the chlorine revenue can be seen when it is considered that the cost of caustic soda production and sale without any revenue from chlorine would be ID 42/125 per metric ton.

The above costs compare with a landed cost of ID 30 per metric ton of normal-grade caustic soda and ID 32 per metric ton of rayon-grade caustic soda. These landed costs are low in comparison with caustic soda prices elsewhere, and may be temporarily due to an excess supply of caustic soda. The supply and demand for caustic soda and chlorine is constantly shifting, and one or the other is usually in excess supply because of the inevitable production of both even though only one is desired.

Present landed costs of chlorine vary from ID 95 to ID 160 per metric ton, depending on the amount and the size of the container in which it is imported. An indication of the variation that can be expected in chlorine prices because of the need to liquefy and transport in special steel containers can be seen from the following list of recent U.S. prices, fob the plant. The prices have been converted to fils per pound.

	Fils per Pound
Cylinders, Carload Lots	33.9
Cylinders, Less than Carload Lots	39.3
One-Ton Containers, Single Car	21.4
One-Ton Containers, Two Cars	17.9
One-Ton Containers, Five Cars	13.6
Tank Cars, 16-; 30-; or 55-ton Capacity	10.4

b. Alternative Processes

The estimated capital requirements and production costs of plants to produce 10,000 metric tons of caustic soda annually by the Solvay Process, the Gluud and Loepmann Process, and by the conversion of imported soda ash, are as follows:

Process	Permanent Investment (ID)	Working Capital (ID)	Production Cost (ID per Metric Ton 100% Caustic Soda)
Solvay	1,500,000	64,000	43.875
Gluud and Loepmann	1,500,000	59,000	41.871
Conversion of Imported Soda Ash	435,000	33,000	44.315

It will be noted in Table 20, in which are shown details of the economics of the Gluud and Loepmann Process, that soda ash is estimated to cost, as an intermediate product, ID 22/897 per metric ton. This compares with a landed cost for soda ash of ID 23 per metric ton. Likewise, the estimated production cost of soda ash by the Solvay Process is close to the landed cost, being ID 24/224 per metric ton. These prices are not low enough to allow production of caustic soda at a cost to compete with imported caustic soda. A much larger plant, of either the Solvay Process type or the Gluud and Loepmann Process type, would be required to produce soda ash cheaply enough, so that its conversion to caustic soda would result in a caustic soda production cost of less than ID 30 per metric ton. Iraq's use of soda ash is low, and will not be markedly increased in the near future; the excess soda ash, over and above that required for Iraq's caustic soda consumption, would have to be exported. Export markets would have to be found and prices would have to be competitive with world prices.

7. Priority

The erection of the caustic soda and chlorine plant should take place at the same time as the erection of the polyvinyl chloride plant recommended elsewhere in this report. The operation should begin simultaneously. If caustic soda consumers are not ready, the caustic soda can be temporarily stockpiled, or if necessary exported, but chlorine would be very difficult to store or export.

8. Means of Establishment

Provided that a decision is reached to establish a polyvinyl chloride plant, the following steps should be taken to establish the plant:

1. Funds should be immediately allocated to the Geological Department of the Ministry of Economics to permit this department to survey the salt plug at Basra and determine the extent of the salt deposit. No commitment should be made with respect to the Fao salt operations until the extent of the Basra salt plug is known. The work of the Geological Department in making this

determination should, therefore, be given high priority.

2. If a salt plug is not proven at Basra, consultants experienced in salt recovery by solar evaporation should be engaged to survey the Fao salt resources to determine what must be done to modernize and increase the capacity of the operation.

3. In the meantime, consultants should also be engaged to prepare plant specifications (contingent on the salt source), including the type of cell to be used and the plant location. Site selection must be coordinated with the principal consumers of the plant's output - that is, the rayon plant, the paper mill, and the polyvinyl chloride plant.

All studies should result in complete specifications adequate for the preparation of tenders. Erection of a caustic soda plant should be on a "turn-key" basis, with the contractor remaining to supervise plant start-up and to train Iraqi personnel. The contractor's agreement should remain in force until adequate trained personnel exist and until plant capacity had been proven. An alternative arrangement to ensure the successful operation of the plant and the training of the personnel would be to employ foreign technical personnel for a specified period, adequate for the training of Iraqi personnel.

TABLE 17

CAUSTIC SODA PRODUCTION: ELECTROLYTIC PROCESS

Production Capacity: 18,315 metric tons of product (10,000 tons 100% caustic soda as 50% solution; 8315 tons liquefied chlorine)

Operation: 330 days per year

Investment: ID 1,280,000

ITEM	UNITS	ID PER UNIT	UNITS PER TON OF PRODUCT	COST (ID) PER TON OF PRODUCT
Raw Materials				
Salt (NaCl)	Metric tons	3.000	0.874	2.622
Graphite	Pounds	0.200	3.200	0.640
Mercury	Pounds	1.750	0.301	0.527
Sulfuric acid	Pounds	0.004	26.7	0.107
Other chemicals	-	-	-	0.049
				3.945
Utilities				
Electricity	KWH	0.002	1710	3.420
Water	1000 gal	0.038	6.34	0.240
				3.660
Direct Labor				
Skilled	Man-hr	0.125	0.87	0.110
Unskilled	Man-hr	0.050	3.48	0.174
				0.284
Supervision				
75% of Direct Labor				0.213
Factory Burden				
100% of Direct Labor				0.284
Maintenance				
4% of Investment				2.790
Depreciation				
10% of Investment				6.975
Miscellaneous				
2% of Investment				1.395
TOTAL OPERATING COST[1]				19.546

1. Interest on Capital not included. Calculated in determining selling price in Table 18.

TABLE 18

ESTIMATION OF SALES PRICE OF CAUSTIC SODA AND CHLORINE

Production Cost			
Direct Operating Expense (18,315 tons x ID 19.546/ton)		358,000	
Sales and Administration Expense at 3% of Operating Expense		10,740	
Interest at 4% of Total Capital Permanent Investment ID 1,280,000			
Working Capital at 10% of Operating Expense	35,800	52,630	
Total Capital	ID 1,315,800		
Total Production Cost			421,370
Annual Revenue Required			
To Break Even			421,370
To Realize 10% Return on Total Capital 421,370 + 131,580			552,950
Sales Price of Products			
To Break Even $\frac{421,370}{18,315}$ = ID 23/000 per ton			
To Realize 10% Return on Total Capital $\frac{552,950}{18,315}$ = ID 30/200 per ton			

Therefore, to break even, chlorine and caustic soda (100%) would each have to sell at ID 23 per ton, while to realize a 10% return on investment, each would have to sell at ID 30/200 per ton.

TABLE 19

CAUSTIC SODA PRODUCTION: SOLVAY PROCESS

I. SODA ASH PRODUCTION

Production Capacity: 16,000 metric tons soda ash per year
Operation: 330 days per year
Investment: ID 1,140,000

Item	Units	ID per Unit	Units per Ton	Cost (ID per Ton of Soda Ash)
Raw Materials				
Salt (NaCl)	Metric tons	3.000	1.85	5.540
Limestone ($CaCO_3$)	Metric tons	0.950	1.40	1.330
Ammonia (Makeup)	Pounds	0.007	9.65	0.068
Sodium sulfide	Pounds	0.035	4.4	0.154
				7.092
Utilities				
Fuel	10^6 Btu	0.008	21.5	0.172
Water	1000 gal	0.038	21.3	0.810
				0.982
Labor				
Skilled	Man-hr	0.125	4.8	0.600
Unskilled	Man-hr	0.050	8.0	0.400
				1.000
Supervision				
50% of Labor				0.500
Overhead				
20% of Labor & Supervision				0.300
Maintenance				
4% of Investment				2.850
Depreciation				
10% of Investment				7.150
Miscellaneous				
2% of Investment				1.430
				21.304
Interest				
4% of Total Capital (ID 1,168,000)				2.920
TOTAL PRODUCTION COST (Soda Ash)				24.224

TABLE 19 (Cont.)

CAUSTIC SODA PRODUCTION: SOLVAY PROCESS

II. CAUSTIC SODA PRODUCTION

Production Capacity: 10,000 metric tons 100% caustic soda per year
Operation: 330 days per year
Investment: ID 360,000

Item	Units	ID per Unit	Units per Ton	Cost (ID per Ton of 100% Caustic Soda)
Raw Materials				
Soda Ash	Metric tons	24.224	1.45	35.200
Limestone (makeup)	Metric tons	0.950	0.143	0.136
				35.336
Utilities				
Fuel	10^6 Btu	0.008	25	0.200
Water	1000 gal	0.038	0.5	0.019
				0.219
Labor				
Skilled	man-hr	0.125	5	0.625
Unskilled	man-hr	0.050	3.75	0.188
				0.813
Supervision				
Included under Soda Ash Manufacture				
Overhead				
20% of Labor				0.163
Maintenance				
4% of Investment				1.440
Depreciation				
10% of Investment				3.600
Miscellaneous				
2% of Investment				0.720
				42.291
Interest				
4% of Total Capital (ID 396,000)				1.584
TOTAL PRODUCTION COST (Caustic Soda)				43.875

TABLE 20

CAUSTIC SODA PRODUCTION: GLUUD AND LOEPMANN PROCESS

I. SODA ASH PRODUCTION

Production Capacity: 16,000 metric tons soda ash per year
Operation: 330 days per year
Investment: ID 1,140,000

Item	Units	ID per Unit	Units per Ton	Cost (ID per Ton of Soda Ash)
Raw Materials				
Salt (NaCl)	Metric tons	3.000	1.23	3.690
Limestone ($CaCO_3$)	Metric tons	0.950	1.25	1.190
Ammonia (Makeup)	Pounds	0.007	9.65	0.068
Intermediate salt ($NaNO_3$)	Pounds	0.011	2.42	0.027
				4.975
Utilities				
Fuel	10^6 Btu	0.008	21.5	0.172
Water	1000 gal	0.038	42.5	1.610
				1.782
Labor				
Skilled	man-hr	0.125	4.8	0.600
Unskilled	man-hr	0.050	8.00	0.400
				1.000
Supervision				
50% of Labor				0.500
Overhead				
20% of Labor and Supervision				0.300
Maintenance				
4% of Investment				2.850
Depreciation				
10% of Investment				7.150
Miscellaneous				
2% of Investment				1.430
				19.987
Interest				
4% of Total Capital (ID 1,166,000)				2.910
TOTAL PRODUCTION COST (Soda Ash)				22.897

TABLE 20 (Cont.)

CAUSTIC SODA PRODUCTION: GLUUD AND LOEPMANN PROCESS

II. CAUSTIC SODA PRODUCTION

Production Capacity: 10,000 metric tons 100% caustic soda per year
Operation: 330 days per year
Investment: ID 360,000

Item	Units	ID per Unit	Units per Ton	Cost (ID per Ton of 100% Caustic Soda)
Raw Materials				
Soda Ash	Metric tons	22.897	1.45	33.200
Limestone (makeup)	Metric tons	0.950	0.143	0.136
				33.336
Utilities				
Fuel	10^6 Btu	0.008	25	0.200
Water	1000 gal	0.038	0.5	0.019
				0.219
Labor				
Skilled	man-hr	0.125	5	0.625
Unskilled	man-hr	0.050	3.75	0.188
				0.813
Supervision				
Included under Soda Ash Manufacture				
Overhead				
20% of Labor				0.163
Maintenance				
4% of Investment				1.440
Depreciation				
10% of Investment				3.600
Miscellaneous				
2% of Investment				0.720
				40.291
Interest				
4% of Total Capital (ID 393,000)				1.580
TOTAL PRODUCTION COST (Caustic Soda)				41.871

TABLE 21

CAUSTIC SODA PRODUCTION: IMPORTED SODA ASH

Production Capacity: 10,000 metric tons 100% caustic soda per year
Operation: 330 days per year
Investment: ID 435,000

Item	Units	ID per Unit	Units per Ton	Cost (ID per Ton of 100% Caustic Soda)
Raw Material				
Soda Ash	Metric tons	23.000	1.45	33.300
Limestone (makeup)	Metric tons	0.950	0.143	0.136
				33.436
Utilities				
Fuel	10^6 Btu	0.008	25	0.200
Water	1000 gal	0.038	0.5	0.019
				0.219
Labor				
Skilled	man-hr	0.125	5	0.625
Unskilled	man-hr	0.050	3.75	0.188
				0.813
Supervision				
50% of Labor				0.407
Overhead				
20% of Labor and Supervision				0.610
Maintenance				
4% of Investment				1.740
Depreciation				
10% of Investment				4.350
Miscellaneous				
2% of Investment				0.870
				42.445
Interest				
4% of Total Capital (ID 468,000)				1.870
TOTAL PRODUCTION COST				44.315

D. NATURAL GAS

Iraq's supply of natural gas, a resource of very great potential value, is currently not being used. The formulation of a plan of action for the utilization of this resource requires that all its principal uses be considered. It is suitable as a fuel in itself; for household, industrial, and power-generation use and for export it can be converted to liquefied petroleum gas (more commonly known as LPG) for domestic or export markets; it can be used as a raw material for a chemical industry; or any one or a combination of these alternatives can be adopted. The sulfur in the Kirkuk gas, an additional valuable resource currently being wasted, could be recovered and sold profitably without interfering with the other uses; indeed in some cases, its removal is an essential prerequisite of efficient utilization. It would be possible to permit natural gas utilization to proceed on a piecemeal and haphazard basis, as has happened in some other countries, but this would be wasteful. Iraq's natural gas supplies, with the exception of those required in oil field operations and for power generation at Dibis and Basra, are still uncommitted. The Development Board has an opportunity to formulate and carry out a program of coordinated development of this valuable resource.

Consideration has been given to the various uses to which natural gas can be put, and the outlines of a utilization program are presented below. Detailed evaluations have been made only in the cases of fuel use for power generation, sulfur recovery, ammonia production (within the fertilizer plant), and the plastic materials polyvinyl chloride and polyethylene, since the Board's request to include natural gas utilization in the Industrialization Survey was received too late to permit other detailed studies. Originally the Board had instructed that natural gas should not be studied in this report.

1. Use as a Domestic Fuel

Natural gas may be used as a fuel domestically for a public gas-supply system for one of the major cities, as a source of fuel for power generation, or as liquefied petroleum gas (LPG). The first two uses are similar in that the gas is used as is, whereas to utilize the gas as LPG requires that certain hydrocarbon components be extracted.

a. Public Gas-Supply System

The use of gas in a public supply system for households and industries requires large and concentrated markets, and only four of Iraq's cities -- Baghdad, Basra, Kirkuk, and Mosul -- are centers of concentrated population of any magnitude. In addition to the household users of natural gas, it is necessary to pay particular attention to industrial users in these areas, since they are potentially large and consistent users. The present lack of industry in the Mosul and Kirkuk areas rules them out for immediate consideration, but Baghdad and Basra are worthy of further consideration.

To provide Baghdad with a public supply system would require the construction of a pipeline from Kirkuk to Baghdad, plus the installation of

the necessary distribution network. An order-of-magnitude estimate for such facilities would be ID 8 million, of which about ID 3 million would be the pipeline cost and ID 5 million would be the cost of the distribution system. This capital cost would include the individual house connections but would not include the cost of new equipment to use the gas and the resultant loss on discarded equipment, nor the cost of conversion of industrial equipment to permit the use of gas. It is difficult to estimate the future use of natural gas for fuel purposes, particularly in view of the effect that the Dora Refinery operating schedules will have on the supply of fuels for industrial use, but estimates have been prepared to indicate the order of magnitude of gas usage that might be achieved after five years' operations. Conversion of large industrial plants for the use of natural gas has been assumed for purposes of this order-of-magnitude estimate, although plentiful supplies of Bunker ''C'' fuel from the Dora Refinery may be available. On this assumption, the estimates presented in Table 22 indicate that total natural gas use in Baghdad might reach 5 million MCF (1000 cubic feet) per year after five years of operation, exclusive of power-generation use. This would amount to about 17% of the total quantity of gas considered, at this time, to be available from the Kirkuk field for purposes other than oil-field use.

In considering the economic advisability of such a proposal, it is necessary to compare the cost of natural gas with the cost of existing fuels. For purposes of evaluation, it has been assumed that the natural gas would displace kerosene in household use and fuel oil in industrial use, and that the maximum prices that could be charged for natural gas would be based on equivalent heat values. In fact, somewhat higher prices might be secured because of the cleanliness and other superior qualities of natural gas, but the premium is unlikely to be very high. In the case of Baghdad using Kirkuk gas, this would result in natural gas prices of 263 fils per 1000 cubic feet for household use, and 74 fils per 1000 cubic feet for industrial use (Table 23).

The revenue from the sale of gas to meet the maximum demand which is forecast to exist after five years' operation would at best permit the distribution system to break even, despite the assumption that other uses would require that gas be brought to Baghdad and the public supply system would bear only the costs of the local distribution system (see Table 24). Since the investment would not provide a cheaper fuel but merely a duplicate although better fuel, and would divert financial and material resources from more profitable projects, the consideration of a public gas-supply system for Baghdad should be deferred for a number of years until other and more important services have been provided. It should, however, be considered if a decision to use gas for power generation or for other purposes requiring large amounts of natural gas is made.

A proposal for utilizing Zubair natural gas in a public gas-supply system in Basra has been before the Board for some time. The estimates for 1962 natural gas consumption that have been presented in the proposal assumed that all power generation in 1962 would be by gas. Based on this assumption, total annual gas consumption by 1962 was estimated to amount to about 1.2

million MCF, of which 270,000 MCF would be for power generation, 560,000 MCF for household use, and 170,000 MCF for industrial use. The total investment for the supply system was estimated to be ID 1,819,000 of which approximately ID 1,230,000 was for distribution services and service connections exclusive of meters and gas-using equipment. As shown in Table 25, the household and industrial use would not provide enough revenue to defray the operating expenses for the distribution system exclusive of the pipeline cost. As in the case of Baghdad, the further consideration of natural gas in Basra for a public gas-supply system should be deferred for a number of years, but should be re-evaluated in conjunction with additional projects requiring a large amount of gas.

TABLE 22

ESTIMATED GAS CONSUMPTION IN BAGHDAD

Household Use

Households in Baghdad Area

1955 estimated:	80,000
1960 estimated:	115,000
1962 estimated:	130,000

Gas Users Estimated Baghdad Area, 1962

Assume 50% of households converted by 1962:
0.50 x 130,000 = 65,000

Gas Use Estimated Baghdad Area, 1962

Assume same average use of natural gas per household served as that estimated in proposal for Basra system now before the Board, or 28 MCF per year per household (five persons in household)

Therefore, annual usage will be:

65,000 x 28 = 1,820,000 MCF

Industrial Use

Assume conversion of cement and brick plants to natural gas, so as to use the following estimated amounts:

Cement:	1,200,000 MCF/year
Brick:	1,000,000 MCF/year
Other:	800,000 MCF/year

TABLE 23

CALCULATION OF NATURAL GAS PRICE EQUIVALENT TO HEATING VALUE OF OTHER FUELS

	Gross Heating[1] Value	Net Heating[2] Value
1. Comparative Heating Values		
Natural Gas - Kirkuk	1560	1410
Natural Gas - Zubair	1121	1050
Crude Oil - Kirkuk	19700	18500
Curde Oil - Zubair	19600	18400
Fuel Oil - Baghdad and Basra	19000	17800
Kerosene - Baghdad and Basra	19700	18650

1. Gross Heating Value, expressed in Btu per cubic foot for gas and Btu per pound for oil, is the maximum utilizable heat in the products of combustion and is obtained only under such conditions that the steam is actually condensed to water. In usual applications this heat is not available.
2. Net Heating Value, expressed in Btu per cubic feet for gas and Btu per pound for oil, is the value of heat normally obtained from the fuel under normal operating conditions, neglecting losses due to poor efficiency of operation, etc.

2. Prices

Kirkuk Crude Oil at Kirkuk	ID per metric ton:	0.275[1]
Kirkuk Crude Oil at Baghdad	ID per metric ton:	0.455[1]
Zubair Crude Oil at Basra	ID per metric ton:	0.275[1]
Fuel Oil at Baghdad and Basra	ID per metric ton:	2.060
Kerosene at Baghdad and Basra	ID per imperial gal:	0.028

1. The prices for Kirkuk and Zubair Crudes are based on the prices the J. G. White Co. was instructed to use by the Development Board.

3. Prices Per Million (10^6) Btu of Alternative Fuels (Based on Net Heating Values.)

a. Kirkuk Crude Oil at Kirkuk

Net Heating Value of 1 ton = 2204 x 18,500 = 40.8 x 10^6 Btu

Cost of 40.8x10^6 Btu = 275 fils

Cost of 10^6 Btu = $\frac{275}{40.8}$ = 6.75 fils

By the same type of calculation:

b. Kirkuk Crude Oil at Baghdad = 11.2 fils for 10^6 Btu

c. Zubair Crude Oil at Basra = 6.8 fils for 10^6 Btu

4. Price per 1000 Cubic Feet of Gas for Equivalent Heating Value

a. Kirkuk Gas price equivalent to Kirkuk Crude Oil

Volume of Gas for 10^6 Btu = $\frac{1,000,000}{1410}$ = 710 cubic feet

10^6 Btu from Kirkuk Crude Oil cost 6.75 fils

Therefore, 710 cubic feet worth 6.75 fils

Equivalent price of 1000 cubic feet (1 MCF) is 9.5 fils

TABLE 23 (Cont.)

CALCULATION OF NATURAL GAS PRICE EQUIVALENT TO HEATING VALUE OF OTHER FUELS
By the same type of calculation:
b. Kirkuk gas price equivalent to crude oil at Baghdad = 15.8 fils per MCF
c. Kirkuk gas price equivalent to fuel oil at Baghdad = 74 fils per MCF
d. Kirkuk gas price equivalent to kerosene at Baghdad = 263 fils per MCF
e. Zubair gas price equivalent to crude oil at Basra = 7.2 fils per MCF
f. Zubair gas price equivalent to fuel oil at Basra = 55 fils per MCF
g. Zubair gas price equivalent to kerosene at Basra = 198 fils per MCF

TABLE 24

ECONOMICS OF BAGHDAD PUBLIC GAS-SUPPLY SYSTEM USING KIRKUK GAS		
Order-of-magnitude estimate for pipeline and distribution system		ID 8,000,000
Only the cost of distribution system (ID 5,000,000) is to be considered in evaluating the economics of a public gas-supply system for Baghdad. This will indicate the economic feasibility of such a system if gas is brought to Baghdad for other uses.		
Order-of-magnitude estimate for distribution system only		ID 5,000,000
Estimated annual usage, households, after 5 years' operation		1,820,000MCF
Estimated annual usage, commercial and industrial, after 5 years' operation		3,000,000MCF
For purposes of this evaluation, power-generation use will be excluded and only household, commercial, and industrial uses will be included.		
Assume that natural gas would replace kerosene in households and fuel oil in industry uses.		
Annual Operating Costs		
Amortization (20 years) - annual charge	ID	250,000
Average interest, during period, at 4%		100,000
Collection costs at 6 fils/MCF (estimated)		25,900
Costs of system operation, servicing, maintenance, etc. (assumed)		320,000
TOTAL	ID	695,900
Annual Revenue		
1,820,000 MCF at 263 fils per MCF	ID	478,660
3,000,000 MCF at 74 fils per MCF		222,000
TOTAL	ID	700,660
Annual Profit after 5 years' operation	ID	4,760
Above calculations do not show over-all costs of discard of present kerosene-using equipment, new gas-burning equipment, or modifications of industrial equipment to permit burning natural gas. They also do not include any charge for natural gas, other than actual costs of collection and distribution.		

TABLE 25

ECONOMICS OF PUBLIC GAS-SUPPLY SYSTEM FOR BASRA USING ZUBAIR GAS	
Estimated investment, including allowance for power generation	ID 1,891,000
Portion of investment for distribution, excluding high-pressure and intermediate-pressure transmission mains, separation and dehydration equipment	1,229,645
Gas usage by 1962 (estimated)	
Power generation	470,000 MCF
Commercial and minor industrial	170,000 MCF
Households	560,000 MCF
For purposes of this evaluation, power-generation use will be excluded and only the household, commercial, and industrial uses and costs will be included. Assume that natural gas would replace kerosene in household use and fuel oil in industrial use.	
Annual Operating Costs	ID
Salaries and administrative cost	25,000
Maintenance materials	12,000
Amortization of capital (20 years) $\frac{1,229,645}{20}$	61,000
Average interest @ 4%	24,590
Collection costs at 6 fils per MCF (estimated)	4,400
TOTAL estimated annual cost	ID 126,990
Revenue	
170,000 MCF @ 55 fils per MCF	9,350
560,000 MCF @ 198 fils per MCF	112,000
TOTAL estimated annual revenue	ID 121,350
Annual loss	ID 5,640
Above calculations do not show over-all costs of discard of present kerosene-using equipment, new gas-burning equipment, or modifications of industrial equipment to permit burning natural gas. They also do not include any charge for natural gas, other than actual costs of collection and distribution.	

b. Use for Power Generation

The use of natural gas as a fuel for the thermal generation of electricity is examined in detail in the power section of this report and only a brief statement of the issues involved is presented here. In the J. G. White report on the Power Resources of Iraq, it is recommended that the proposed power stations at Basra and Dibis be equipped to burn natural gas (using crude oil to operate pilot burners for safety purposes) and that the Baghdad power stations burn crude oil. The use of crude oil as a fuel cannot be justified, since its value to Iraq as a raw material for her new refinery or as an export, or as a reserve for export, is greatly in excess of the figure of 275 fils

per ton at the oil fields - the figure used by the White Company, who stated that it was used on instructions from the Board. Natural gas, at the cost of 6 fils per MCF at Kirkuk, is by far the cheapest fuel for power generation in Iraq and should be used accordingly. Its use, however, raises a serious problem. The Dora Refinery produces large quantities of Bunker ''C'' fuel oil as a residual product for which in the absence of power use there are inadequate local markets. The answer to this problem is to develop alternative domestic, and if necessary, foreign markets for fuel oil, and not to use it as a substitute for a much cheaper fuel. Attempts to develop foreign markets will depend, it appears, upon whether satisfactory alterations can be made in the present agreement with the oil companies.

The use of natural gas as a fuel for power generation does not conflict with the other recommended uses. Sulfur can be extracted from the Kirkuk gas before it is piped to Dibis and Baghdad, with the desirable result of reducing the corrosive effect of the gas on the pipeline system. Ethylene and many other petrochemicals can be extracted from the Basra gas without seriously impairing its thermal qualities. The only problem involved is that of geographical juxtaposition, and this underlines the need for coordinated development.

c. Liquefied Petroleum Gas (LPG)

The Butane, propane, and isobutane contained in natural gas can be extracted to serve as a fuel known as liquefied petroleum gas, LPGas, or LPG. LPG is unique among commonly used fuels in that under relatively low pressures and at normal temperatures, it can be transported and stored in a liquid form, which when released at atmospheric pressures and at relatively low temperatures, vaporizes and can be handled and used as a gas. In its gaseous state, LPG is very similar to natural gas and can be similarly used as a source of heat, power, and refrigeration. LPG is transported under pressure in steel containers for household use, and in railway tank cars or tank trucks for large shipments. By means of valves and regulators on the containers, the LPG can be vaporized to provide the gaseous fuel.

LPG finds its principal use in areas that are not economically served by a utility gas system. Although the investment required to install facilities for its production is small in relation to that required to install a utility gas system, the use cost of the gas is high because of the handling and distribution charges. For example, an installation to handle 4000 MCF per day of natural gas (Kirkuk degassing stations), to produce 5000 tons of LPG per year, would cost about ID 200,000. The annual operating cost would approximate ID 70,000. In addition to the cost of preparing the LPG, distribution costs would amount to about ID 200,000 annually, resulting in a fuel costing ID 1.140 per million Btu's. This compares with a cost of ID 0.187 per million Btu's for kerosene, and ID 0.052 per million Btu's for fuel oil in Iraq. At this high cost, LPG would find in Iraq a limited market at the present time, despite the fact that it is a fuel superior to kerosene.

The source of gas for LPG production and the recovery of LPG in conjunction with other operations can have a pronounced effect on the costs of LPG production. The costs quoted above are based on the production of LPG from gas from the separators at the Kirkuk fields, but production of LPG from refinery gas would be at lower cost. On the other hand, if the LPG fraction of the natural gas were separated in conjunction with an operation producing ethylene, costs might be 15-20% of the costs of recovering LPG alone. Another factor that could affect the recovery cost of LPG from Kirkuk gas would be a credit for the natural gasoline (pentane, hexane, etc.) removed during production of LPG. Such a credit would be possible if the natural gasoline could be incorporated into the crude-oil pipeline.

It is recommended that because of the limited market at the present time for LPG production, consideration be given to LPG production for domestic use only if it is done in conjunction with other uses of natural gas and only if the resultant cost is competitive with alternative fuels.

2. Use as an Export Fuel

Iraq's natural gas could also be exported, either in gaseous or liquid form, but this would be a use requiring extensive evaluation and investigation because of the large investment required and the importance of assured markets. Two possibilities for using Middle East gas in European markets have been the subject of study in the past few years. One, the Bechtel Scheme, proposed piping the natural gas to Southern and Western Europe and possibly across the English Channel. The scheme is said to be technically capable of delivering natural gas to Europe at a competitive price, but the magnitude of the estimated cost of the proposed pipeline (ID 180 million) and the political and strategic considerations involved, place this proposal outside the scope of the present report.

The second method, which involves liquefaction by refrigeration and transport in insulated oceangoing vessels, has received considerable attention and evaluation from many sources. Preliminary estimates have indicated that this method compares favorably with transportation by pipeline, but later studies have shown that the initial estimates were very optimistic. The transportation of gas in this manner is technically possible and is being done in the United States at the present time - but in river barges and not in oceangoing vessels. No definitive costs of this method of transporting natural gas have been released, but a preliminary cost evaluation indicates that the investment required would be of the order of ID 125 million for handling about 500 million cubic feet of natural gas per day.

Of the two proposals for exporting natural gas, it appears that the most interesting one for Iraq would be the pipeline plan, since shipment by liquefaction in oceangoing vessels requires that the gas be located near a port. As 80% of the natural gas estimated by the oil companies to be available for purposes other than oil-company operations is at Kirkuk, most of the gas

that could be exported would suffer a cost penalty of 20-30 fils per MCF as a result of transportation to Basra. Thus, even without a profit markup, the economics would be initially unfavorable in comparison with areas where gas is available near a shipping port. The investment required for the transport of gas to European markets by either proposal is of such magnitude that Iraq should not undertake either one alone; a cooperative venture, particularly for the pipeline plan, should be evaluated if other countries involved express an interest in it. Export of the Zubair gas is not recommended, except on a short-term basis, since although it is near a seaport it would be more profitable to use the gas for power generation and as a resource for a new chemical industry.

Another method of exporting natural gas would be to export it in the form of LPG; the required investment would be relatively small and the technical obstacles to be overcome would be considerably less serious. Unfortunately, the present demand for this product is currently being supplied in most areas by existing refinery operations, at prices comparable to the estimated production costs in Iraq. Egypt consumes nearly 6000 tons per year of LPG, which is sold at a price of ID 17 per ton at the Suez Refinery. Production costs of LPG in Iraq would vary from ID 2 to ID 15 per ton, depending upon the source of the gas, the scale of operation, and whether the source were used for LPG extraction only or for other purposes yielding LPG as a joint product or a by-product. The markets for LPG are not expected to change in the foreseeable future, but in view of the rising trend in the use of petroleum hydrocarbons as a chemical raw material, market possibilities unforeseen at the present time may develop. Thus, the export of LPG should be reviewed at a later date.

In summary, the export of natural gas by pipeline, by liquefaction, or in the form of LPG does not appear to be economically attractive at the present time. The magnitude of investment required and the problems yet to be solved are such that no action should be taken at present although future developments should be carefully studied and evaluated. The export markets for LPG should likewise be watched and future potential markets evaluated as they develop.

3. Sulfur Recovery

The natural gas from the Kirkuk fields contains appreciable amounts of sulfur in the form of hydrogen sulfide, of which about 300 metric tons per day are currently going to waste. At the present time, this sulfur is the only proven source of sulfur in Iraq except for that in gypsum, which it has never proven economical elsewhere to recover. Although there are indications of ground deposits, no information is yet available as to the extent of the reserves or the economics of extraction. In any event, the Kirkuk gas is the preferred source of sulfur at the present time, since it is going to waste and the sulfur in the ground will remain for later exploitation. Future additional uses of Kirkuk gas would require that the sulfur be removed, parti-

cularly if they call for pipeline transportation, since the sulfur would corrode the pipeline. Details of the markets for sulfur, the recovery system, and the estimated investment and operating costs are presented in a separate section of this report.

4. Petrochemicals

One of the most important uses of natural gas in the world today is as a raw material for the manufacture of chemicals (commonly called petrochemicals to denote their derivation from petroleum or natural gas.) The total amount of natural gas consumed in this manner is small in relation to the total available, but the products so derived are valuable and find a ready and expanding market.

The petrochemical products that can be manufactured from natural gas are numerous and depend to a large degree upon the analysis of the natural gas supply. The principal components of natural gas are methane, ethane, propane, the butanes, and smaller amounts of hexanes and heptanes. The percentage of each of these hydrocarbon components will vary with the natural gas source and, within a narrower range, will even vary in the same source. The number of carbon atoms in each hydrocarbon component of the gas generally determines the basic chemical structure of the possible end products. For example, while methane is suitable for the production of carbon monoxide, methyl chloride, and chloroform (among others), all of which contain one carbon atom in each molecule, it is not economically suited for the manufacture of ethylene, which contains two atoms of carbon in each molecule and is more economically manufactured from the ethane portion of the gas. General practice in the U. S. petrochemical industry is to design a plant to process one or two of the hydrocarbon components, although many operations utilize gas of mixed composition.

Among the most important and best known chemicals now derived from natural gas are ammonia, methyl alcohol, ethylene, and acetylene, all of which can be further processed to produce additional products. The low initial cost of natural gas and the good processing economics have resulted in its replacing coal as the primary fuel for the production of synthesis gas, the basic step in the manufacture of ammonia and methyl alcohol. As indicated in another section of this report, acetylene can be produced at a cost approximately equivalent to the cost of producing it by the traditional method, which uses calcium carbide. Certain processes, as yet unproven on a commercial scale, indicate that further cost reductions are possible, but production of acetylene from natural gas in other parts of the world is still limited.

Petrochemical manufacture can rarely be carried out on a small scale, owing to the complexity and scale of the process and the resultant high equipment costs. Unless large-scale production can be adopted, production costs are not competitive. The present consumption of petrochemicals in Iraq is very small, particularly when compared with the normal output of a petrochemical-manufacturing plant. For example, methyl alcohol consumption is currently about 10,000 to 15,000 liters per year - equivalent to about one day's produc-

tion of many of the plants constructed elsewhere in the world. The present domestic consumption of fertilizer, which is based largely on ammonia derived from natural gas, is only about 500 tons annually, while a minimum-sized ammonia plant may have a capacity of 150 - 200 tons a day.

The industrial and agricultural development of Iraq will, of course, increase the demand for petrochemicals, but the domestic market will not be large enough to justify the erection of plants for many years to come. This lack of domestic markets should not, however, prevent the establishment of petrochemical-manufacturing industries, because their establishment for export markets would have many beneficial effects on the Iraq economy. The conversion of natural gas, which is now being wasted, into valuable end products would use an important resource and would provide a continuing source of foreign exchange. The products so manufactured would, in many instances, also use domestically manufactured materials and thus permit the establishment of industries that otherwise would be uneconomical. For example, the production of polyvinyl chloride from natural gas is discussed in this report. The production of this valuable plastic would require chlorine, thus permitting the establishment of a caustic soda and chlorine plant, which would also provide caustic soda for the manufacture of rayon, paper, and vegetable oils. Without the production of polyvinyl chloride, a market for chlorine would not exist and it would not be economical to produce caustic soda, with the result that it would have to be imported at considerable cost. Petrochemical manufacture would also supply products for use in Iraq at a cheaper cost than imports, thus stimulating their domestic use; fertilizers are an important example. All petrochemical industries and the industries that would be stimulated by them would employ Iraqi labor and would, in many cases, use other domestic resources, such as salt, sulfur, phosphates, and lime, and generally bring Iraq's economic resources into fuller use.

The manufacture of petrochemicals for export markets does involve a considerable element of risk: there will be stiff competition from countries that are already industrially developed. Many of these countries have operated in this field for a long period and already possess considerable technical knowledge and marketing experience. Nevertheless, the risk appears to be one worth taking if industrialization is to be achieved. Other domestic industries will be assisted, both as sources of supply and as potential customers. New skills will be developed and Iraq will obtain further benefits from her valuable chemical resources.

Of the petrochemicals that could be manufactured from Iraq's natural gas, some are obviously unsuitable while others show great promise. Ethyl alcohol, for example, should not be manufactured, since world supply is in excess of demand, domestic requirements are small and alternative sources of domestic alcohol are already in excess of demand. Others, such as glycol, acetone, formaldehyde, and ethyl chloride, do not appear to be attractive, because of low profit margins and the present capacity of facilities elsewhere in the world. Certain petrochemicals do, however, warrant further evaluation. For example, as discussed elsewhere in this report, polyvinyl chloride, poly-

ethylene, and ammonia offer promise of successful operation. In addition, the production of methanol and of ethylene derivatives should be investigated.

It is recommended that immediate action be taken to evaluate the use of natural gas for petrochemicals, so that this use may proceed in coordination with other industrial developments. Specifically, the evaluation should cover the following points:

1. A determination of which petrochemicals in addition to polyvinyl chloride, polyethylene, and ammonia are worthy of further consideration for manufacture in Iraq. An attempt should first be made to eliminate the obviously unsuitable ones and narrow the range of those to be considered.
2. An evaluation of the pertinent world market data concerning the petrochemicals considered to be suitable for manufacture in Iraq. This should include information about present and planned industrial capacities elsewhere in the world. Principal consideration should be given to India, Southeast Asia, the Phillipines, Japan, Europe, and the Middle East. Contacts should be made with appropriate government agencies and private organizations in the key market areas, to determine their plans and possible acceptance of the products.
3. Estimates of plant costs, operating costs, potential profitability, and required scale of investment. These estimates are necessary to compare the alternate processes for petrochemical production and to evaluate the use of Zubair versus Kirkuk gas.
4. The preparation of a schedule showing the types and capacities of plants to be built, the general location, and the priority assigned to each plant. Such a schedule should take into account Development Board plans for establishment of other industries, power-generation use of natural gas, the status of necessary resources (such as skilled labor, transportation, and power), and the relationship of the plants proposed to other proposed industrial plants.
5. The evaluation of the future competitive position of Iraq in the Middle East in the petrochemical industries proposed. The potential difficulties foreseen arising from competition from similar operations in other Middle East countries should be assessed.
6. The provision of the cost data in such a way as to show the effect of natural gas pricing on the economics of the proposed operation and also to permit comparison of the proposals with other natural gas uses that might be considered.

Both Zubair and Kirkuk gases are suitable for petrochemical use from a technical standpoint, but at the moment Zubair gas seems more suitable for immediate development. Before a decision can be made, it will be necessary to consider the following:

1. The range of products that can be made from Zubair gas that will not interfere with its proposed power use, based on estimated power requirements for the Basra area in 1973. If additional supplies of Zubair gas cannot be assured, the petrochemicals produced from natural gas must show a greater return on investment than power use, or the processes selected must be

those that permit the use of the off-gas from power generation.

2. The actual cost of producing petrochemicals at Kirkuk for transportation to Basra or overland export to European and Middle Eastern countries.
3. The production of petrochemicals at Baghdad, using Kirkuk gas piped there, in conjunction with power uses and transport of the products to Basra for export.
4. The cost of producing petrochemicals at Basra, using Kirkuk gas piped to Basra.
5. The effect of gas price on the total cost of the products. A price has not yet been set by the oil companies for the sale of natural gas for industrial purposes.

5. Recommendations

1. Natural gas should be used for power generation at the Dibis and Basra stations. At these two locations, natural gas is the cheapest fuel available, based on the prices established at the time of the J. G. White Company power study.
2. Efforts should be made to find additional domestic and foreign markets for Bunker ''C'' oil so that the Dora Refinery's output can be disposed of without difficulty. Natural gas should then be piped to Baghdad for power generation.
3. The sulfur contained in Kirkuk natural gas should be recovered for domestic and export use. This is preferable to the mining of sulfur, since the sulfur in the gas is being wasted while that in the ground can remain for later exploitation.
4. The use of natural gas as a raw material for producing petrochemicals for export should be further evaluated, since this use shows promise. Further information is required on markets and plant investment and operating costs for products considered to be suitable in addition to those recommended in this report. Zubair gas seems to be the better source at the present time, although further evaluation and other requirements for Zubair gas may indicate that Kirkuk gas is also suitable, particularly if considered in conjunction with power-generation use in Baghdad.
5. The use of gas for a public gas-supply system should not be considered at the present time, because a preliminary evaluation indicates that even after five years' operation, the revenue from gas sales would only defray operating expenses. The large investment required would merely provide a duplicate fuel and would divert resources from projects considered to be more important this time. If natural gas is piped from Kirkuk to Baghdad for power use, a public supply system may have a reasonable chance of economic success and a further evaluation should be made in a few years.
6. The export of natural gas as a fuel should not be considered as an undertaking by Iraq alone, because the indicated gas reserves and rate of production are too small to justify the very large investment required (ID 120,000,000 to ID 180,000,000), and because successful operation would

require the cooperation of many countries. Firm evaluations of proposals are not complete and further consideration should await the results of studies that have already been undertaken elsewhere. Participation of Iraq in such an operation should be on a short-term basis, since internal uses of gas may ultimately use the reserves that could be exported.

7. Consideration of the production of liquefied petroleum gas (LPG) should be deferred for some years. There are at present very limited potential domestic markets for this product, which is an expensive fuel. Evaluation of this possibility should wait until other facilities are established that will permit recovery of LPG as a joint product or by-product at lower cost. Export markets are limited since much of the present demand is supplied by existing refinery operations in the countries concerned.

E. SULFUR RECOVERY

1. Introduction

Sulfur has long been recognized as one of the world's basic commodities and is now of primary importance in the modern chemical-process industries. There are indications that world demand will continue to grow; although sulfur consumption in Iraq at the present time is very small, it will increase rapidly as industries recommended elsewhere in this report are established.

While there are indications of sulfur deposits in Iraq, principally at Fatha Gorge, the extent of these deposits is unknown and a suitable method of mining them has yet to be developed. Attention should therefore be directed first toward the sulfur in natural gas, because it is going to waste and is not recoverable once the gas has been released and flared. On the other hand, the ground deposits will remain as a reserve until they are required or until further exploration indicates their full extent and the development of a suitable recovery process warrants their recovery.

2. Recommendations

1. A plant should be established to recover the 275 metric tons of sulfur that are currently being wasted daily in the amount of Kirkuk natural gas that is estimated by the oil companies to be surplus to their operational requirements. Export markets for sulfur are large and it should be possible to develop markets for Iraq's output. A decision to establish a nitrogenous-fertilizer plant in Iraq would result in a substantial domestic demand for sulfur; nevertheless, the decision to begin sulfur recovery need not be deferred until the decision to build a fertilizer plant is made. The sulfur recovered should in part be stockpiled for this future domestic use.
2. Work should begin immediately to determine the most suitable markets for Iraq's sulfur and to arrange for its marketing and distribution. One possible arrangement would be to sell the recovered sulfur to an organi-

zation engaged in the sale of bulk chemical commodities in world markets.

3. Exploration of ground sulfur deposits and the evaluation of suitable methods of mining the sulfur at Fatha Gorge should continue. Funds should be included in the budget of the Geological Department of the Ministry of Economics to cover this work. Any sulfur so recovered would necessarily have to be exported, since Iraq's markets in the foreseeable future could not consume all the sulfur in the natural gas.

3. Markets for Sulfur

a. Present Domestic Markets

Iraq's current sulfur consumption is small, amounting to about 3000 tons per year. The bulk of the consumption is used in small sulfuric-acid-manufacturing operations at the refineries at Dora and Khanaqin, where sulfuric acid plants with capacities of 20 and 8 tons per day, respectively, are located. A very small amount of sulfur is consumed in the form of sulfuric acid, which is imported at an annual rate of 100 to 400 tons. Most of the sulfur currently consumed is imported, but some is obtained from small domestic operations that mine ground deposits.

b. Potential Domestic Markets

The consumption of sulfur will increase rapidly in Iraq as industrialization proceeds. A rayon plant recommended elsewhere in this report would consume a total of 3750 tons - 1600 tons as sulfur for the manufacture of carbon disulfide, and 2150 tons as sulfuric acid. The production of ammonium sulfate fertilizer would require 35,000 to 75,000 tons annually, depending upon the size of plant finally selected. Other uses of sulfur will develop as industry grows, because sulfur in the form of sulfuric acid is a basic chemical, used not only in chemical-process industries but in others (such as electroplating operations and scale- and rust-removal from steel before finishing operations).

c. Export Markets

World consumption of sulfur is extremely high, amounting at present to over 10 million tons annually. Present estimates indicate that consumption will continue to increase. Estimates indicate that U. S. consumption alone will be about 30% higher by 1965 than the present rate of about 6 million tons annually.

In 1950 a serious sulfur shortage in the world resulted in its rationing to nonproducing countries. As a result of the shortage, efforts were increased to discover and exploit new deposits, recover by new methods from hitherto unexploited sources, and eliminate wasteful practices. Countries that had not produced sulfur previously began to do so. Mexico, for example, is now mining sulfur deposits previously considered to be uneconomical because of their poor location relative to markets, and it is anticipated that export

volume will reach 1 million tons by 1956.

In spite of increased production, it is anticipated that elemental sulfur will remain temporarily scarce for some years to come because of the expansion of the chemical industry throughout the world. The marketing of Iraq's sulfur is unlikely to present a serious problem, since at the present time sulfur is in free supply on the open market. Although a world board was established some years ago to allocate sulfur supplies, it is no longer in existence, because the severe world shortage has eased.

4. Resources

a. Mineral Deposits of Elemental Sulfur

Ground deposits and domes of elemental sulfur are the usual source of world sulfur today, but increasing amounts are being obtained by recovery of the sulfur contained in some natural gas supplies. Although there is considerable evidence that there are widespread deposits of elemental sulfur throughout Iraq, notably at Hit, Sulaimin Beg, and Fatha Gorge, the deposits cannot be classified as proven deposits. With the exception of the deposits at Fatha Gorge, none of the deposits are considered to be of commercial importance.

The sulfur in the Fatha Gorge deposit is mixed with layers of gypsum, mudstone, and limestone, and considerable amounts of bitumen or asphalt are present. The reserves are reported to be extensive - estimates range up to 16 million metric tons in the area - but the deposits have not been fully explored. The high asphaltic content of the deposits makes recovery of this sulfur problematical, because under present methods of refining, the product may be contaminated with the asphalt. Some geologists claim that a modified Frasch process of mining may offer a practical method of recovery, but considerable development will be required before a successful process can be devised. Investigation of suitable methods of recovery should, of course, continue, but it is impossible to say at this time when it will be possible to recover this sulfur.

Evidence at the present time indicates that there are unlikely to be sulfur domes discovered in Iraq. Generally, such domes occur overlying underground salt domes, but only a few such salt domes contain sulfur in commercially recoverable quantities. With the exception of the indication of a salt dome near Basra, no salt domes have been discovered in Iraq.

b. Sulfur in Natural Gas

Although Iraq's ground deposits are uncertain, there is one proven source of sulfur that can be recovered but is currently going to waste. This source is the natural gas from the Kirkuk fields; it averages almost 10% hydrogen sulfide, which could be recovered and converted to sulfur by proven processes. Unlike ground deposits of sulfur, which will remain in reserve until recovery takes place, the sulfur in natural gas is unrecoverable once the

gas has been released and flared, as is the current practice. Some conservation is possible by using the gas to repressurize the oil fields, but this is often inconvenient and costly. Based on the amount of gas the oil companies consider to be currently available as in excess of their operational needs, about 275 metric tons per day of sulfur could be recovered from this gas.

Future uses of Kirkuk gas for petrochemical production or fuel uses would require that the sulfur be removed from the gas prior to use, to prevent excessive corrosion or product contamination.

5. Recovery of Sulfur from Natural Gas

The recovery of sulfur from natural gas involves two basic processes: the first for extracting the hydrogen sulfide from the gas, and the second for converting the hydrogen sulfide after removal into elemental sulfur.

a. Removal of Hydrogen Sulfide

Although several processes are available for the extraction of hydrogen sulfide from the gas, it is considered that the Girbotol process is most suitable for Iraq. In the Girbotol process an aqueous solution of diethanolamine is used as the solution in which hydrogen sulfide is absorbed. The diethanolamine solution enters the top of an absorbing tower into which the gas flows at the bottom. The solution and the gas pass countercurrent to one another, and the hydrogen sulfide is absorbed by the diethanolamine solution. The purified gas leaves the top of the tower to be used or discarded. The solution containing the hydrogen sulfide leaves the bottom of the tower and passes through heat exchangers to the top of what is known as a reactivator. As the solution passes downward through the vertical reactivator, the hydrogen sulfide is stripped from the solution by steam, which is ascending the reactivator. The steam is generated by boiling the diethanolamine solution, which collects in a re-boiler at the base of the reactivator tower.

The mixture of steam and hydrogen sulfide leaves the top of the reactivator and passes into a cooler, where the steam is condensed and either returned to the system or discarded. The hydrogen sulfide is separated from the condensate and is then available for conversion to sulfur. The diethanolamine solution, after it has been stripped of the hydrogen sulfide, is recycled through the heat exchanger, further cooled with water or air, and returned to the absorbing tower.

b. Conversion of Hydrogen Sulfide to Sulfur

After the steam condensate has been removed from the hydrogen sulfide, the latter is converted to sulfur by a modified Claus Process. The hydrogen sulfide stream is sent to a specifically designed reaction furnace, where it is burned with a controlled amount of air. The quantity of air for the burning is that necessary to convert one third of the total hydrogen sulfide to sulfur dioxide and water, and to convert all of the hydrocarbons that enter the fur-

nace to carbon dioxide and water. A limited amount of carbon monosulfide and carbon disulfide forms. Actual operation of the furnace may require that as much as two thirds of the hydrogen sulfide bypass the furnace, in which case the third that enters the furnace is burned completely to sulfur dioxide and water. From the reaction furnace, the stream passes to a waste heat boiler and then on to the catalyst chamber.

In the catalyst chamber, hydrogen sulfide and sulfur dioxide react in the presence of a catalyst to form sulfur and water. The catalyst bed serves to eliminate undesirable side-reaction products that may have formed in the furnace. Conversion of 85% of the hydrogen sulfide to sulfur takes place in this catalyst chamber. It is possible to use two catalyst stages with intercooling, and obtain 90% conversion. A third stage can be employed if atmospheric pollution is a major problem, with the result that conversions can reach 98%. The number of stages actually selected is determined by economic and atmospheric-pollution considerations. At the present time, one catalyst stage should suffice for Iraq instead of two, and a saving of about 25% in investment realized.

After treatment in the catalyst chamber the gas passes through a wash tower in which elemental sulfur is condensed, after which it is ready for removal and storage. The residual gas, which consists primarily of nitrogen, carbon dioxide, water, and small amounts of hydrogen sulfide, is vented to the atmosphere.

6. Costs and Investment

Estimates have been prepared of the capital investment required and the operating costs for recovering 275 tons per day of elemental sulfur from kirkuk natural gas. It is estimated that a total investment of ID 1,230,000 would be required, of which ID 1,070,000 would be fixed capital and ID 160,000 working capital. The fixed capital would provide the gas-treating plant for removal of the hydrogen sulfide from the natural gas; the sulfur recovery unit; waste-heat boilers; steam-generation equipment; instrumentation; and other facilities required for the efficient functioning of the plant. No allowance has been made for power-generation equipment, since it has been assumed that electric power will be available at the plant site. The estimates also assume that a substantial portion of the equipment would be obtained from European suppliers.

It is difficult to give an exact estimate of fixed capital requirements, because costs can vary substantially with the exigencies of the plant site chosen. Nevertheless, the cost of recovering the sulfur would not vary appreciably, since the major costs of sulfur recovery are for raw materials and utilities. An increase of 50% in investment costs would increase production costs by only 22%.

Table 26 shows that the estimated recovery cost would be ID 5.432 per metric ton. These costs are based on a cost of natural gas collection of 6 fils per 1000 cubic feet. As prices which natural gas should be charged to industrial

operations have not yet been established, for purposes of this estimate the cost of 6 fils per 1000 cubic feet, estimated for the J. G. White Co. report, has been selected. The cost of supplying natural gas for the sulfur-recovery operation will play an important role in determining sulfur-recovery costs, as shown in Table 27. Natural gas at 10 fils per 1000 cubic feet would increase sulfur recovery costs to ID 6.654 per metric ton.

General practice in the United States is to charge the sulfur-recovery operation for only the lost thermal value of the gas caused by the hydrogen sulfide removal. As only about 10% of the volume of the gas stream will be removed in the extraction process, with a relatively small reduction in the thermal content, the cost of natural gas for sulfur recovery should be quite close to actual collection costs.

Steam costs have been charged at essentially fuel cost, or the cost of natural gas. Maintenance costs at 7% of the investment are higher than is usual for most chemical operations, because of the corrosive nature of hydrogen sulfide and associated solutions.

The recovery cost of ID 5.432 per metric ton is a very attractive one in relation to the world price. Based on this cost and an estimated transport cost of ID 3.000 per ton from Kirkuk to Basra, the cost at Basra would be ID 8.432 per metric ton. The current price of sulfur fob the Gulf Coast ports of the United States is about ID 11 per metric ton. Since world prices are pegged to this price because of the large exports of sulfur from the United States, prices elsewhere are much higher. It is not possible to say at what price Iraq's sulfur would sell on world markets; this would depend to a large extent on the markets to which it is sold. A price within the range of ID 11 to ID 15 per metric ton should, however, be obtainable.

In determining the price at which sulfur might be sold in Iraq, it has been assumed, for purposes of evaluation, that the price of sulfur at the plant would be the price for foreign sales fob Basra less the transport cost from Kirkuk to Basra. Since the largest portion of the future market would be at Basra if a fertilizer plant for manufacturing ammonium sulfate were established there, the price would still be about ID 11 to ID 15 per metric ton. This would represent a considerable savings to Iraq consumers over the present cost of imported supplies - about ID 25 per metric ton.

On the basis of a sales price of ID 11 per metric ton at Basra, it should be possible to realize a return on the permanent investment of 17.1%, and a return on the total capital of 14.9%. Sales expenses have been estimated at 5% of the total sales value. If the sales price were ID 15 per metric ton, the return on permanent investment would be 49.2%, while the return on total capital would be 42.8%. (See Table 28.)

7. Special Problems and Considerations

a. Sale of Sulfur in Foreign Markets

Because of the large and growing demand for sulfur in world markets, it would be possible to dispose of Iraq's total production from natural gas

without difficulty. The 90,000 tons that Iraq can recover annually would represent only 0.9% of the total world consumption and only 2.2% of the total amount consumed by areas other than the United States. Work will of course be required to determine the particular markets that Iraq's sulfur could best supply and to establish marketing procedures and outlets before the plant comes into operation. Despite the existence of large markets, planning for proper distribution and marketing should begin early if costs are to be kept to a minimum. It would appear that the best method of marketing Iraq's sulfur would be to employ the services of one of the world's major sulfur-producing or chemical companies. Such companies have established markets and distributing channels and already handle the output of many of the smaller producers. Since most of the world's sulfur supplies are in the United States, it is very probable that one or more of the companies with European or Eastern markets would be prepared to handle Iraq's supplies. In this way, Iraq would avoid the costs and problems of setting up her own marketing organization, and would remain free to withdraw sulfur for use in a domestic fertilizer plant if the Board decided in the future to enter this industry and produce a fertilizer requiring sulfur.

b. Transportation

The transport of bulk sulfur from Kirkuk to Basra at the rate of 275 tons per day would require bulk container cars and efficient handling facilities. The railways must be alerted to this need and assisted where necessary to provide the necessary equipment and facilities so that they will be ready for operation by the time the plant starts operation.

8. Priority

The sulfur-recovery plant should be established as soon as possible. Initially, all the sulfur could be exported or in part stockpiled for future use by a fertilizer plant, the establishment of which would require a substantial portion of the recovered sulfur. Although additional sulfur is contained in the gas that the oil companies use in their operations, it is understood that the gas so used is widely distributed and that collection, removal, and redistribution would be difficult. Detailed investigation would be required to determine whether the additional sulfur that would be recovered would justify the trouble and expense involved. It would also be necessary to determine the arrangements that would have to be made to permit recovery without interference with the efficient operation of the oil fields.

TABLE 26

ESTIMATED COST OF PRODUCTION OF SULFUR FROM KIRKUK NATURAL GAS

Production:: 275 metric tons per day
Operation: 330 days per year
Investment: ID 1,070,000

ITEM	UNITS	ID PER UNIT	UNITS PER METRIC TON	COST (ID PER METRIC TON)
Raw Materials				
Sour gas ($9.6\%\ H_2S$)	1000 cubic feet (MCF)	0.006	290.9	1.745
Diethanolamine	Pounds	0.140	0.77	0.108
Other chemicals	-	-	-	0.157
				2.010
Utilities				
Power	KWH	0.002	31	0.062
Water Treated	1000 gal	0.038	1.9	0.072
Water Cooling	1000 gal	0.007	22	0.154
Steam (at fuel cost)	1000 lb	0.006	14.6	0.088
				0.376
Operating Labor	Man-hr	0.125	1.32	0.166
Supervision				
50% of Operating Labor	-	-	-	0.083
Plant Administration and Overhead				
100% of Operating Labor & Supervision	-	-	-	0.249
Maintenance & Supplies				
7% of Investment	-	-	-	0.825
Depreciation				
10% of Investment	-	-	-	1.180
				4.889
Interest on Capital				
4% of Total Capital (ID 1,230,000)				0.543
Total Production Cost				5.432

TABLE 27

EFFECT OF NATURAL GAS PRICE ON COST OF SULFUR RECOVERY

Production: 275 metric tons per day
Operation: 330 days per year
Investment: ID 1,070,000

ITEM	GAS 6 fils/ MCF	GAS 10 fils/ MCF	GAS 20 fils/ MCF	GAS 30 fils/ MCF	GAS 50 fils/ MCF
All costs except cost of sour gas and steam	3.599	3.599	3.599	3.599	3.599
Sour gas (9.6% H_2S)	1.745	2.909	5.818	8.727	14.545
Steam	0.088	0.146	0.292	0.438	0.730
Total Production Cost	5.432	6.654	9.709	12.764	18.874

TABLE 28

ESTIMATED EARNINGS OF SULFUR-RECOVERY OPERATION AT KIRKUK, AT SALES PRICES OF ID 11 and ID 15 PER METRIC TON FOB BASRA

Annual Production: 90,750 Metric Tons

	Sales Price Per Metric Ton	
	ID 11	ID 15
Sales Income		
90,750 tons at stated price	998,250	1,361,250
Cost of Sales		
Sulfur-recovery cost (90,750 x 5.432)	492,950	492,950
Sales expense at 5% of sales value	49,910	68,060
Freight - Kirkuk to Basra at ID 3/ton	272,250	272,250
	815,110	833,260
Gross Profit	183,140	527,990
Return on Permanent Investment (ID 1,070,000)	17.1%	49.2%
Return on Total Capital (ID 1,230,000)	14.9%	42.8%

F. FERTILIZER PRODUCTION

1. Introduction

The importance of agriculture to Iraq's national life and the availability of large quantities of natural gas suggest a prima facie case for the establishment of a fertilizer industry in Iraq. Unfortunately, serious problems associated with the use of fertilizers in Iraq and the availability of export markets must be given very careful consideration before a final decision can be taken. It is, nevertheless, clear that fertilizers can be produced in Iraq at a cost considerably below the present import price. This industrial possibility has therefore been given extended treatment. The findings presented are based on discussions with agronomists in Iraq and other Middle Eastern countries, fertilizer distributors, available scientific literature on Middle East farming practices, and fertilizer-manufacturing practices in the United States and elsewhere. Because of the present limited markets in Iraq, special attention has been paid to the markets in other countries of the Middle East, and in India and Pakistan.

2. Market Aspects of Fertilizers

a. Present Domestic Markets

Iraq's present consumption (See Table 29) of chemical fertilizers is very small, as is evidenced by the 1954 consumption of only 379 tons, of which the greater part was of the nitrogenous type, principally in the form of ammonium sulfate. In the light of the 22 million donums of land now under cultivation in Iraq, the amount of fertilizer currently used may be viewed as experimental or introductory rather than as commercial usage.

TABLE 29

IRAQ'S FERTILIZER IMPORTS (ALL TYPES)

Year	Metric Tons	Value (ID)
1950	228	6682
1951	100	2307
1952	59	1314
1953	32	944
1954	379	9345

Source: Customs and Excise Department, Government of Iraq.

Many factors have joined to prevent the widespread usage of fertilizer. Although analyses indicate that Iraq's soils are deficient in nitrogen and phosphorus in comparison with Western standards, the system of farm-

ing under which land is allowed to lie fallow and to be covered with weeds replenishes the soil with sufficient nutrients to permit one crop to be grown each year. Since Iraq's cultivable land is large in relation to its population, there has been no population pressure to force the use of intensive farming that would require the use of fertilizers to replenish the nitrogen and phosphorus.

Even if intensive methods of farming were necessary, additional problems would remain. The soils are composed of very fine particles, which when wet are densely packed and do not permit the effective use of irrigation water and drainage. These soil characteristics are particularly detrimental to proper drainage when the ''paddy'' system of irrigation is used, whereby the land under cultivation is flooded and the water either seeps down through the soil or evaporates on the surface. This low soil permeability and the lack of proper drainage causes salt to accumulate in levels some distance below the surface. As these salt levels rise, they prevent normal development of the roots, which instead of growing in a vertical direction, spread laterally and dry too rapidly. Without water, the plant nutrients added by means of fertilizer are of little value, but if sufficient water for them is applied, the plants cannot breathe.

In some cases, however, particularly in the growing of vegetables, the use of fertilizer has proven to be effective and economical, despite the very high prices that must be paid for imported fertilizer. It is effective because vegetables are grown on the sides of small trenches, spaced several feet apart; when water is applied, it deposits the salt in the center area and permits better root development. Water can be supplied frequently without apparent harm, since the plant is well above the water level. Improved yields gained in this way are particularly valuable because vegetables command a reasonably high price in Iraq.

b. Potential Domestic Markets

Despite the present limited domestic market for chemical fertilizers, there are prospects that consumption will increase in the future, although the rate of increase may be slow. As studies now underway at the Abu Ghraib Experimental Station and by fertilizer distributors on the optimum use of fertilizer are completed, and as methods of improving soil conditions and irrigation practices are found and disseminated, more fertilizer will be used effectively. Increased growing of fruits and vegetables will provide more crops that need and can justify the use of fertilizers; the increased growing of maize or corn, which are heavy consumers of nitrogen, would probably also necessitate their use. The growing of sugar beets and the increasing demand for present crops, such as cotton for the textile mills and the vegetable oil industry, will also increase the need for fertilizers.

It is, however, impossible to offer a realistic estimate of the probable rate of consumption increase, since it will depend on the following factors:

1. The experimental demonstration that fertilizer can be used in Iraq under local conditions of farming to increase yields on a consistent basis. Discussions with agronomists who have worked in Iraq indicate that this has not yet been done, and the report of the Board's Fertilizer Committee seems to confirm this.
2. The extensive demonstration of successful results to farmers and their adequate instruction in methods of use.
3. The price at which fertilizers are made available for use in Iraq. Farmers will not use fertilizer, even if it gives improvement in yields, unless the cash value of the additional output substantially exceeds the cost of the fertilizer applied. At the moment, ammonium sulfate (21% nitrogen) is reported to sell in Baghdad at ID 33 per metric ton, which is approximately twice the cost in farm areas near producing centers. Superphosphate (16%-18% phosphoric pentoxide) at ID 26 per ton, and potash (containing 45% potassium oxide) at ID 36 are also very highly priced.

Estimates of future consumption must be based on assumptions regarding these three factors, and at the present time insufficient information is available to make such assumptions. Perhaps the only assumption that can be justified is that if consistently good results are obtained and demonstrated to the farmers, larger quantities of fertilizer will be used at a low price than at a higher one. Although this is entirely obvious, it is of the greatest importance, since fertilizer prices in Iraq will remain high in the absence of domestic production. In this matter the Board itself can influence the course of events by establishing a domestic industry.

The Fertilizer Committee of the Development Board has made an estimate of the consumption of fertilizers in Iraq that indicates that approximately 35,000 tons (50% nitrogen and 50% phosphate) will be used in 15-25 years. It is impossible to endorse this estimate, since there does not seem to be any evidence to support the implicit assumptions upon which it is based. It can, however, be observed that equal rates of consumption of nitrogen and phosphate seem very unlikely and that nitrogen usage will probably increase more quickly than phosphate usage. In Egypt, for example, where soil conditions are somewhat similar, only 12,000 tons of phosphate was used in 1954, in comparison with 111,000 tons of nitrogen.

In summary, it is considered that potential future demand cannot be estimated at this time with any degree of reliability, but that plentiful supplies of low-cost fertilizer, particularly of nitrogen, would lead to substantially increased usage.

c. Potential Export Markets

Because the production of low-cost fertilizer requires substantially larger markets than are likely to be available in Iraq for many years, it is necessary to consider the possibility of export markets. In considering potential export markets, it is necessary to consider primarily those markets that can be reached without excessive transportation costs, since

the fertilizers will have to compete with those of foreign manufacturers. Transportation costs are heavy in relation to production cost and frequently lead to a doubling of prices in areas distant from producing centers, but production costs of fertilizers will not vary appreciably from those in other countries, since overhead charges form a relatively large portion of the total cost.

Suitable markets for Iraq's fertilizers would be other countries of the Middle East, and India and Pakistan. Table 30 shows the consumption of fertilizers by Turkey, Syria, Jordan, Lebanon, Egypt, and Sudan for the year 1953-1954. Table 31 shows the general trend of fertilizer consumption in Egypt, the largest fertilizer consumer in the Middle East. Statistics from various sources of fertilizer consumption in these countries vary widely, but since these data are considered to be realistic it is clear that with the exception of Egypt and Turkey, consumption is very small. Despite the great increase in world production since the war (see Table 32) to an amount about double that produced in 1938-1939, the increase in consumption in Asia has lagged behind that of the rest of the world.

The consumption figures in Table 30 indicate that nitrogen is the most widely used fertilizer in Iraq's potential market areas and that consideration of domestic production at the present time should be confined to nitrogenous fertilizers despite the recently discovered deposits of phosphate. Experience in the future may indicate that a phosphate plant should be considered for export and domestic markets, and the possibility should be re-evaluated in a few years. In entering the export markets for nitrogenous fertilizers, Iraq would have to face strong competition, because although consumption has increased markedly during recent years, the present capacity for producing nitrogenous fertilizers is in excess of demand. It should be pointed out, however, that it is probably not in excess of need, but that effective demand has not yet reached need. In the United States, present nitrogenous-fertilizer production capacity is estimated to be 30% in excess of demand.

In the potential markets for Iraq's fertilizer, considerable progress has been made toward achieving self-sufficiency in fertilizer needs. India, for example, has one plant operating at full capacity and has plans underway for the construction of additional facilities for the production of ammonia and urea, and a production goal of 1 million metric tons annually of nitrogenous fertilizers. Pakistan is building a plant for the production of 50,000 metric tons annually of nitrogenous fertilizer, and further expansion of this plant is planned. Other countries, including Iran, Indonesia, and the Phillipines, already have plans underway to erect fertilizer units. It is thus clear that the decision to produce fertilizers for the export market would have to be taken in the realization that the output of the plant would be difficult to dispose of and that severe losses might be encountered for many years.

TABLE 30

FERTILIZER CONSUMPTION (FOR 1953/1954) IN COUNTRIES NEAR IRAQ

Nutrient Consumption (Metric Tons)			
Country	Nitrogen (N_2)	Phosphate (P_2O_5)	Potash (K_2O)
Turkey	11,500	15,000	2,400
Syria	2,500	700	250
Jordan	200	50	-
Lebanon	4,000	833	1,575
Egypt	111,000	12,000	200
Sudan	2,000	1,500	1,200
TOTAL	131,200	30,083	5,625

Sources:

1. Import Statistics.
2. British Middle East Office. Beirut.
3. Annual Review of World Production and Consumption of Fertilizers F.A.O., November, 1954.

TABLE 31

TREND OF EGYPT'S USE OF CHEMICAL FERTILIZERS

Type of Fertilizer Nutrient (Thousands of Metric Tons)			
Year	Nitrogen (N_2)	Phosphate (P_2O_5)	Potash (K_2O)
1938	76.0	8.7	0.2
1947/48	64.2	7.6	-
1948/49	76.0	13.5	-
1949/50	109.0	13.5	-
1950/51	109.0	18.0	-
1953/54	111.0	12.0	0.2

TABLE 32

WORLD PRODUCTION OF CHEMICAL FERTILIZERS

FROM 1951/1952 to 1954/1955

Type of Fertilizer	Thousands of Metric Tons				Percentage Change From			
	1951/52	1952/53	1953/54	1954/55	1951/52 to 1952/53	1952/53 to 1953/54	1953/54 to 1954/55	1951/52 to 1954/55
All Fertilizers ($N + P_2O_5 + K_2O$)	15,368	16,268	17,288	18,072	5.9	6.3	4.5	17.6
Nitrogen (N)	4,462	4,894	5,233	5,562	9.7	6.9	6.3	24.6
Phosphoric Acid (P_2O_5)	5,968	5,982	6,335	6,590	0.2	5.9	4.0	10.4
Potash (K_2O)	4,938	5,393	5,720	5,920	9.2	6.1	3.5	19.9

3. Type of Nitrogenous Fertilizer to be Manufactured

There are several forms in which nitrogenous fertilizers can be produced and used, and all have certain specific advantages. Some forms have the advantage of easy handling and application while others, where it is possible to use them, are the cheapest source of nitrogen, despite handling difficulties. Application of nitrogen in the form of anhydrous ammonia is the cheapest method of applying nitrogen to the soil, and is finding widespread use in the United States. However, its use requires very advanced farming techniques and a large investment on the part of farmers for storage facilities and application equipment. Nitrogenous fertilizers in this form would find very limited domestic and export markets, and it is not recommended for production in Iraq.

Nitrogen can also be produced in a liquid form, either for direct application as fertilizer or for the manufacture of mixed fertilizers that contain nitrogen, phosphorus, and potash. Although savings can be realized by the concentrated form in which nitrogen is present in liquid solutions (35%-41%), special equipment is required. This equipment is not as expensive as that for anhydrous-ammonia application; the use techniques are not as advanced as for ammonia, but tractors are required. Once again, a severe limitation would be placed upon sales of nitrogen in this form.

Nitrogenous fertilizers can be made in solid forms; these are easiest to transport and store and are readily adapted to hand-spreading techniques. Although numerous solid-nitrogen derivatives are available in world markets, the important ones and those suitable for consideration by the Development Board are urea, ammonium nitrate, and ammonium sulfate. Although all three could be produced in one plant, it would not be economical to do this in a plant of the size that would be appropriate for Iraq. Only

one of the three should be selected.

Urea is increasing in popularity as a nitrogenous fertilizer, because of its high nitrogen content (about 45%); it may ultimately become the dominant solid-nitrogen material. Its acceptance has, however, been somewhat slow in other countries, since farmers who have become accustomed to other types of nitrogenous fertilizers have been slow to accept the fact that the nitrogen in urea is, generally speaking, equivalent to that in other solid fertilizers. Production of nitrogen in the form of urea would have the advantage of offering valuable economies in transportation costs to export markets, but its limited acceptance would be a serious drawback.

Ammonium nitrate would encounter less resistance from farmers, although acceptance might still be slow. Because of the very serious explosions that have occurred in the past in ships carrying ammonium nitrate, many people consider it to be a dangerous material. It is possible that ocean-transport operators and officials in port cities might oppose its transport by sea, despite the fact that it is possible to avoid the explosion hazard. If it is decided to produce a concentrated form of nitrogen, it would probably be preferable to select urea and accept its market difficulty.

Ammonium sulfate has been in use for many years and has been widely accepted by farmers. This factor is extremely important for a new fertilizer plant, since attempts to introduce new forms of fertilizer even into large fertilizer markets, such as the United States, may require as long as five years for ultimate success. In addition, ammonium sulfate is easier to handle than other forms, since it is the least hygroscopic and tends to cake less than others in bulk or bagged form. Ammonium sulfate is always required in preparing the conventional mixed fertilizers to give the product the proper physical condition. In addition, from the point of view of usage in Iraq, the acidity that ammonium sulfate imparts to the soil would be very beneficial, because of the normal alkaline nature of the country's soils. Thus, at the present time, ammonium sulfate appears to be the preferred form of nitrogenous fertilizer for Iraq to produce. A more detailed investigation of the market areas that Iraq can best supply may indicate that one of the other forms would be more suitable, but for purposes of this evaluation, ammonium sulfate only will be considered. As the production of ammonia is also necessary for urea and ammonium nitrate, the cost and investment data provided for ammonia would apply in the case of production of either urea or ammonium nitrate. (See Appendix, Section F-9, for cost data on ammonium nitrate production.)

4. Manufacture of Ammonium Sulfate

The manufacture of ammonium sulfate requires three distinct operations: the manufacture of ammonia, the manufacture of sulfuric acid, and the mixing of the ammonia and sulfuric acid to form the ammonium sulfate The technology of all three steps is well proven, and large numbers of design and construction firms are capable of erecting plants with guaranteed

performance.

a. Ammonia Production

Synthetic ammonia is produced by the direct combination of its constituent elements, hydrogen and nitrogen, as indicated by the following equation:

$$N_2 + 3H_2 = NH_3$$

To obtain reasonable conversions at a rapid rate, it is necessary to carry out the reaction at an elevated pressure and temperature, and in the presence of a catalyst. Pressures of from 100 to 1000 atmospheres and temperatures of from 400C to 600C are used in the various commercial processes. A promoted iron oxide catalyst is common to all these processes.

b. Production of Synthesis Gas

There are several methods in use for producing the hydrogen and nitrogen (the synthesis gas) needed for the ammonia reaction. The method selected depends upon the source of the hydrogen. Although the hydrogen can be obtained from many sources, most of the recently constructed ammonia plants use natural gas as the raw material. In view of Iraq's plentiful supply of natural gas and its present lack of other hydrogen sources, consideration has been given only to the production of the synthesis gas from natural gas.

The production of synthesis gas from natural gas is accomplished by one of two processes: either the steam-methane reforming process, or the partial-oxidation process. Of the two, the steam-methane reforming process is considered to be preferable, since it is usually used when fuel or raw material costs are low and it is not subject to as many operating vagaries as the partial-oxidation process. This factor seems to outweigh the advantages of the partial-oxidation process, such as higher thermal efficiencies, lower power usage, and slightly reduced consumption of natural gas. Investment costs are similar.

In the steam-methane reforming process for producing synthesis gas, steam and natural gas, at approximately one atmosphere of pressure, are fed to a direct-fired furnace, which is called a reforming furnace. In this furnace, the feed gases pass through tubes containing a promoted nickel oxide catalyst at a temperature of about 700C. The following reactions take place:

$$\underset{\text{(Methane)}}{CH_4} + \underset{\text{(Steam)}}{H_2O} = \underset{\text{(Carbon Monoxide)}}{CO} + \underset{\text{(Hydrogen)}}{3H_2}$$

$$\underset{\text{(Carbon Monoxide)}}{CO} + \underset{\text{(Steam)}}{H_2O} = \underset{\text{(Carbon Dioxide)}}{CO_2} + \underset{\text{(Hydrogen)}}{H_2}$$

The mixture of gases then enters a second reforming section, where sufficient air is added to supply the amount of nitrogen that is required to result in a ratio of 3 parts hydrogen to one part nitrogen in the purified gas. The oxygen in the air combines with a portion of the crude synthesis gas to form

carbon monoxide and carbon dioxide.

At this point, additional steam is added to the crude gas before it enters what is known as the shift converter, where as a result of a reaction between the carbon monoxide of the gas and the steam, the carbon monoxide is converted to carbon dioxide and additional hydrogen is produced. The gas from the shift converter is cooled, compressed to about 30 atmospheres of pressure, and scrubbed with monoethanolamine or other agents to remove carbon dioxide. Carbon monoxide is then removed by scrubbing with a solution of ammonium cuprous formate at pressures up to 200 atmospheres. The gas that finally results is a mixture of hydrogen and nitrogen in a ratio of 3 to 1 that contains only small traces of other materials. This gas is suitable for feeding to the ammonia converter.

c. Synthesis of Ammonia

One of the more common processes for ammonia synthesis is one called the Casale system; this is the process to be described here. The purified mixture of hydrogen and nitrogen is compressed to about 12,000 psi. After compression, the gas is filtered to remove any oil and is then expanded through an ejector pump, which is used to pump recycled gases. The fresh feed gas is mixed with gas that has been recycled and enters the ammonia converter, where about 25% of the gases react in the presence of a promoted iron oxide catalyst to form ammonia. After leaving the converter, the ammonia formed is separated from the unreacted gases. With the exception of a small amount purged from the system, the unreacted gases are recycled by the ejector pump. The ammonia that has been separated is liquefied and is then passed into a low-pressure ammonia receiver, which operates at about 1000 psi and permits the release of any dissolved gases. The ammonia is then stored for further use in refrigerated storage tanks.

d. Manufacture of Sulfuric Acid

The most widely used method of manufacturing sulfuric acid, and the one recommended for Iraq, is the contact process. (See Appendix, Section F-9.) In this process, elemental sulfur is first melted and then sprayed into a sulfur-burning unit, where the sulfur is burned with air to form sulfur dioxide (SO_2). From the sulfur burner, the gas that contains the sulfur dioxide passes to a waste-heat boiler, where the temperature of the gas is reduced to that desired in the next stage, the catalytic converter. The heat removed from the gas stream in the waste-heat boiler is used to generate steam that can be used to melt the sulfur, to drive the blowers that are required in the process, and to supply other users in the plant.

The cooled gas then enters the first of two converters, where in the presence of a vanadium-type catalyst, most, but not all, of the sulfur dioxide is converted to sulfur trioxide (SO_3) by reacting with the oxygen in the gas. This gas is cooled and then passed to the second converter, which also con-

tains a vanadium catalyst; further conversion of the sulfur dioxide to sulfur trioxide is accomplished. By the time the gas leaves the second converter, 96%-97% of the sulfur dioxide has been converted to sulfur trioxide.

After leaving the second converter, the hot gases that contain the sulfur trioxide are cooled and passed into the bottom of an absorption tower, into the top of which is flowing a stream of 98%-99% sulfuric acid. As the upward-flowing gas passes through the downward-flowing acid, the sulfur trioxide in the gas is absorbed by the acid. At the bottom of the tower is delivered an oleum of 20% concentration (100% sulfuric acid plus 20% sulfur trioxide in solution). The gas that leaves the top of the tower passes into the bottom of a second absorbing tower, into the top of which is flowing sulfuric acid of a slightly lower concentration than is the case for the first tower. The sulfur trioxide that still remains in the gas as it enters the second tower is absorbed by the acid as the gas passes through the downflowing acid. The waste gas is discharged from the top of the tower and sulfuric acid of about 100% concentration is removed from the bottom of the second tower. Diluting of the oleum and the 100% sulfuric acid with water permits obtaining the desired concentration of sulfuric acid.

e. Production of Ammonium Sulfate

To produce ammonium sulfate, ammonia and sulfuric acid are combined continuously in a circulating stream that enters a piece of equipment called an evaporative crystallizer. In this crystallizer, the removal of water causes the ammonium sulfate that has been formed by the reaction of ammonia and sulfuric acid to crystallize. The solution containing the crystals is then sent to centrifugal separators, where the crystals are removed, sent to a rotary drier to remove additional liquid, and then stored for shipment in either bulk or bagged form. In some cases, the crystals are treated with a clay slurry to prevent the crystals from sticking together in moist weather. The clear solution from which the crystals have been separated by the centrifugal separators is recycled to join the stream of ammonia and sulfuric acid entering the crystallizer.

5. Costs and Investment

Estimates have been prepared of the cost of producing ammonium sulfate fertilizer in Iraq. Preliminary estimates of the investment and manufacturing costs can be made with a much higher degree of accuracy than is the case of most chemical-manufacturing processes, because of the large number of companies engaged in constructing nitrogenous-fertilizer plants. Estimates have been prepared to show the cost of producing ammonia and sulfuric acid as well as to show the cost of the finished fertilizer. The costs have been based on the erection of an integrated fertilizer plant, in which are located the facilities for ammonia manufacture, sulfuric acid production, ammonium sulfate production, and all auxiliary facilities. Erection of an integrated

unit results in substantial investment savings over erection of individual units.

Detailed estimates have been prepared for plants of three different capacities, to determine the plant size economically most attractive to Iraq. Of the three units evaluated, the one that offers the best return on investment is one that produces 760 tons per day (258,000 tons annually) of ammonium sulfate.

The estimated total capital required to erect such a plant is ID 6,780,000, of which ID 6,150,000 would be permanent investment, and ID 630,000 would be working capital. The investment (see Table 33) allows for the following:

1. Ammonia plant with capacity of 200 tons per day, operating with internal combustion engines fired by natural gas to drive the compressors. Auxiliary facilities include facilities for the refrigerated storage of about 20 days' production, and the facilities for handling natural gas. Cost of the initial amounts of catalysts and process chemicals are included in the investment.
2. Sulfuric acid plant with a capacity of 650 tons per day (600 tons for the fertilizer manufacture, 50 tons for sale to other domestic consumers). Facilities are included for the storage and handling of sulfur and the storage of sulfuric acid. Dual production lines with a capacity of 325 tons per day are assumed, since it is not common to build one unit with a capacity of more than 500 tons per day.
3. Ammonium sulfate plant with a capacity of 760 tons per day. The auxiliary facilities include facilities for handling and storing the finished product, with allowance for the storage of about 3 months' production. Allowance for bagging is not included.
4. Common auxiliary facilities, such as office buildings and water supply, have been apportioned among the three plants. The costs of gathering and transporting the natural gas have not been shown separately, but have been included in the cost of natural gas delivered to the plant.

The investment costs presented are based on costs for the erection of similar facilities in the United States, with adjustments to allow for erection in Iraq. Since similar facilities have not been previously erected in Iraq, capital investment may deviate by about 10%, but such changes would not have a major effect on operating costs.

Detailed estimates of the operating costs of this plant are presented in Tables 34 through 36, where it is shown that the estimated cost of producing ammonium sulfate is ID 9.364 per metric ton, as compared with the landed price of ID 20 per metric ton. For purpose of the estimate only, it has been assumed that the plant would be located at Basra, since this is the best location for producing fertilizer for export markets. Other considerations, which are discussed later, may indicate that the plant should use Kirkuk gas. On the assumption that the plant would be at Basra, sulfur has been charged at ID 15 per metric ton, or the price considered to be the maxi-

mum export price fob Basra. If sulfur were charged at the actual cost of production and transport to the plant site at Basra, the estimated production cost of ammonium sulfate would be reduced to ID 7.623 per metric ton. The costs are based on a cost of natural gas of 8 fils per 1000 cubic feet, to cover the cost of collecting the natural gas at the edge of the oil fields (6 fils) and transporting it to the plant site (2 fils). The rate at which natural gas is charged, however, has little effect on the over-all production cost (as Table 37 shows, an increase in production cost of only about 2% for each 10 fils per 1000 cubic feet increase would result). All costs for operating labor, yard and utility crew, office clerks, and guards are included as labor overhead, while the salaries of the executive staff and office personnel are included as factory overhead.

On the assumption that most of the production would be exported during the initial years of operation, estimates have been prepared (Table 38) of the profit that would accrue from the sale of ammonium sulfate abroad. Based on a sales price of ID 16 per metric ton fob Basra, the approximate price in view of current world prices, a return of about 13.5% on total fixed capital would be realized. This return is based on the charging of sulfur at the export sales price and thus includes a substantial profit on the sulfur-recovery operation. If sulfur were charged at actual costs of recovery and transportation, a return on investment of 20.7% would result.

A plant with a capacity of 760 tons a day would achieve a level of production costs that could be reduced only slightly by increased size, and would therefore be suitable for establishment in Iraq if adequate markets can be discovered. Additional, rather than larger-sized units of equipment, would be required for a larger plant, and apart from a further spreading of overhead costs little advantage would be obtained. Smaller plants would result in lower returns on investment and substantially higher production costs. Costs of production in plants of 190 tons per day and 380 tons per day are presented in Tables 39 through 43.

Unfortunately, although the low-cost production of fertilizer in Iraq is possible, profitable results might be hindered by inadequate markets. Domestic markets are negligible and the rate of future usage is uncertain; further detailed investigation is required to discover whether export markets and distribution channels can be developed. If such further investigation reveals export markets inadequate to absorb, at least initially, the output of at least a 380-ton-per-day plant, fertilizer production in Iraq would result in losses that would have to be weighed against the possible advantage of plentiful supplies of cheap fertilizer to the agricultural economy before a decision were taken.

6. Special Problems and Considerations

a. Plant Location

On the assumption that most of the fertilizer that would be pro-

duced would have to be exported, at least initially, to ensure economical operation, location of the plant at Basra would appear to be most suitable. For purposes of this estimate, therefore, it has been assumed that this would be the location selected. Location of the plant in this area is, however, contingent on the availability of an adequate supply of natural gas for the production of ammonia, since its production would require very substantial quantities of the gas that is estimated to be available, and its use for this purpose would reduce the amount available for power-regeneration purposes. It is not possible to state at this time whether additional supplies will be available, but the recent discovery of the Rumailia field, for which gas-availability estimates have not yet been made, and other possible discoveries suggest that additional supplies may become available for fertilizer production at Basra. Decision to establish the plant at Basra would have to be based either on the assurance of additional gas or on the realization that it would interfere with power uses of the gas.

In the event that adequate gas is not available in the Basra area, the use of Kirkuk gas should be considered, either at Kirkuk or at Baghdad, if natural gas is to be piped there for power use. Although location at Kirkuk or Baghdad is not as satisfactory with respect to certain export markets as location at Basra, the Kirkuk location would offer an advantage for serving such markets as Syria and Turkey. Production costs would be reduced at Kirkuk and Baghdad because of the reduced costs of transporting the sulfur, but the fertilizer exported through Basra would incur heavier transportation costs. The degree of profitability would depend upon the location of the major markets.

b. Sales of Sulfuric Acid to Other Consumers

It is suggested that the sulfuric acid unit have a capacity that is 50 tons per day higher than is required by the fertilizer operation, so that it can supply certain outside consumers. This offers the advantage of lower-cost production (75% of a 50-ton-per-day plant at full-capacity operation), and avoids the danger of the very high costs that would be incurred if a small plant were operated at less than full capacity.

c. Selection of Ammonium Sulfate Manufacturing Process

Ammonium sulfate can be made by using ammonia with either sulfuric acid or gypsum (calcium sulfate). In spite of the plentiful supplies of gypsum in Iraq, the process using sulfuric acid is recommended in this report. Gypsum is normally employed only when sulfuric acid is very costly and when very-large-scale production is possible. These two conditions do not prevail in Iraq, where sulfur supplies can be obtained at very low costs and fairly-small-scale production is desirable. A further advantage of the sulfuric acid process is that a comparatively small investment is required to convert the plant to the production of ammonium phosphate.

It is possible, however, that further investigation would disclose that there are good reasons for adopting a gypsum process, if the plant is located at Kirkuk, near the gypsum deposits.

d. Water Supply

Water requirements for an integrated fertilizer plant of the type recommended are large; fresh water is usually preferred for cooling purposes, and it will be necessary, when selecting a plant location site, to take this into account.

7. Means of Establishment

Whatever the size of plant eventually selected, a substantial portion of its output will have to be exported for many years if economic operation is to result. This will undoubtedly pose very serious problems because of the somewhat limited potential export demand, coupled with the absence of established marketing channels. The most satisfactory answer to this problem would appear to be to enter into an agreement with an organization that possesses established Middle Eastern and Asian markets. This could be done by inviting a foreign firm to set up a branch factory in Iraq jointly with the Iraq Government or Iraqi private interests, or by an agreement to sell domestically produced fertilizer to a marketing agency for export distribution. An agreement of this kind should contain provisions to share losses and gains from market fluctuations, and a clause that would provide a safeguard against loss resulting from the building of additional plants in other countries by the marketing agency. In the event that export markets cannot be assured, the Board might wish to consider the advisability of financing a small plant to produce fertilizer, to encourage its domestic use, although profitable operation could not be expected for many years.

8. Recommendations

1. A plant to produce nitrogenous fertilizers should be established in Iraq, provided that:
   a. Further investigation confirms the existence of adequate export markets.
   b. In the event that adequate export markets are not revealed by further examination, the Board considers it desirable to encourage the use of fertilizer in Iraq's agriculture in spite of the danger of unprofitable operation for a number of years.
2. Encouragement and assistance should be given to the organizations that are studying soil conditions and irrigation practices in Iraq. On the basis of the knowledge obtained, it will be possible to improve fertilizer utilization in Iraq and increase the present very small demand for it.
3. Consideration of a plant to manufacture phosphatic fertilizers should be deferred for a number of years. Iraq's phosphate deposits have not yet been thoroughly evaluated, and the use of phosphatic fertilizers is very small in the areas in which export markets would be sought.

TABLE 33

ESTIMATED CAPITAL INVESTMENT FOR A PLANT TO PRODUCE

760 METRIC TONS OF AMMONIUM SULFATE PER DAY

ITEM	TOTAL ESTIMATED INVESTMENT COST (ID)	
Ammonia Plant (200 T/D)		
Process Plant (gas drive)	2,900,000	
Auxiliary Facilities	690,000	
Total		3,590,000
Sulfuric Acid Plant (650 T/D[1])		
Process Plant	940,000	
Auxiliary Facilities	200,000	
Total		1,140,000
Ammonium Sulfate (760 T/D)		
Process Plant	760,000	
Auxiliary Facilities	660,000	
Total		1,420,000
Total Fixed Capital		6,150,000

1. Includes extra capacity of 50 tons per day to supply other users of sulfuric acid in Iraq.

TABLE 34

ESTIMATED MANUFACTURING COST OF ANHYDROUS AMMONIA

Plant Capacity: 200 metric tons of ammonia per day
Operation: 340 days per year, 3 eight-hour shifts
Investment: ID 3,590,000

Item	Units	ID per Unit	Units Per Metric Ton	Cost (ID per Metric Ton)
Raw Materials				
Natural Gas	MCF	0.008	28.8	0.230
Caustic Soda	Pounds	0.015	8.25	0.124
Ethanolamine	Pounds	0.143	0.44	0.063
Other	-	-	-	0.157
				0.574
Catalysts				
Shift	Pounds	0.270	0.275	0.074
Synthesis	Pounds	0.250	0.220	0.055
Reforming	Pounds	0.465	0.110	0.051
				0.180
Utilities				
Natural Gas				
Compressors	MCF	0.008	12	0.096
Process Heating	MCF	0.008	8	0.064
Steam	MCF	0.008	8	0.064
Electricity	KWH	0.002	100	0.200
Process Water	1000 gal	0.038	0.83	0.032
Cooling Water Makeup	1000 gal	0.007	6.3	0.044
				0.500
Operating Labor				
8 Men/Shift	Man-hr	0.125	1.03	0.128
Supervision and Burden				
100% of Operating Labor				0.128

TABLE 34 (Continued)

ESTIMATED MANUFACTURING COST OF ANHYDROUS AMMONIA

Item	Units	ID per Unit	Units Per Metric Ton	Cost (ID per Metric Ton)
Factory Overhead				
100% of Labor & Supervision				0.256
Miscellaneous Operating Charges				
50% Operating Labor				0.064
Maintenance				
4% of Investment				2.112
Depreciation				
8½% of Investment				4.488
Other Charges				
2% of Investment				1.056
Total Production Cost[1]				9.486

1. Interest on Total Capital included in ammonium sulfate costs.

TABLE 35

ESTIMATED MANUFACTURING COST OF SULFURIC ACID

Plant Capacity: 650 metric tons of sulfuric acid per day
Operation: 340 days per year, 3 eight-hour shifts per day
Investment: ID 1,140,000

Item	Units	ID per Unit	Units per Metric Ton	Cost (ID per Metric Ton)
Raw Materials				
Sulfur	Metric ton	15.000[1]	0.34	5.100
Catalyst	Liters	1.070	0.0044	0.005
Miscellaneous	0.5% of investment	-	-	0.026
				5.131
Utilities				
Power	KWH	0.002	11	0.022
Water				
Process	1000 gal	0.038	0.47	0.018
Cooling (Makeup)	1000 gal	0.007	0.44	0.004
Steam (Credit)	1000 lb	0.008	2.2	(0.018)
				0.026
Operating Labor	Man-hr	0.125	0.64	0.080
Supervision				
50% of Operating Labor				0.040
Labor Overhead				
100% of Labor & Supervision				0.120
Factory Overhead				
100% of Labor & Supervision				0.120

1. Based on assumed export price of sulfur of ID 15 per metric ton, fob Basra.

TABLE 35 (Continued)

ESTIMATED MANUFACTURING COST OF SULFURIC ACID

Item	Units	ID per Unit	Units per Metric Ton	Cost (ID per Metric Ton)
Maintenance				
4% of Investment				0.206
Depreciation				
7% of Investment				0.360
Miscellaneous				
1% of Investment				0.052
Total Production Cost[2]				6.135

2. Interest on Total Capital included in ammonium sulfate costs.

TABLE 36

ESTIMATED MANUFACTURING COSTS OF AMMONIUM SULFATE

Plant Capacity: 760 metric tons of ammonium sulfate per day
Operation: 340 days per year, 3 eight-hour shifts per day
Investment: ID 1,420,000

Item	Units	ID per Unit	Units per Metric Ton	Cost (ID per Metric Ton)
Raw Materials				
Sulfuric Acid	Metric ton	6.135	0.780	4.785
Ammonia	Metric ton	9.486	0.261	2.475
				7.260
Utilities				
Natural Gas (Drying)	MCF	0.008	1.2	0.010
Natural Gas (Steam)	MCF	0.008	0.22	0.002
Electricity	KWH	0.002	29.7	0.059
Process Water	1000 gal	0.038	0.20	0.008
Cooling Water	1000 gal	0.007	1.06	0.007
				0.086
Operating Labor	Man-hr	0.125	0.4	0.050
Supervision				
50% of Operating Labor				0.025
Labor Overhead				
100% of Labor & Supervision				0.075
Factory Overhead				
100% of Labor & Supervision				0.075
Maintenance				
3% of Investment				0.165
Depreciation				
8½% of Investment				0.468
Miscellaneous Expenses				
2% of Investment				0.110
				8.314
Interest				
4% on Total Capital				1.050
Total Production Cost				9.364

TABLE 37

EFFECT OF NATURAL GAS COST ON TOTAL PRODUCTION COST OF AMMONIUM SULFATE

Natural Gas Cost (Fils per MCF)	Ammonium Sulfate Production Cost (ID per Metric Ton)
8	9.364
10	9.398
20	9.560
30	9.724
40	9.887
50	10.050

TABLE 38

ESTIMATED PROFITS FROM PRODUCTION AND EXPORT SALE OF AMMONIUM SULFATE

Plant Investment:	ID 6,150,000
Working Capital:	630,000
Total Capital:	ID 6,780,000

Annual Income	
Sales revenue from 258,000 tons of ammonium sulfate at ID 16 per ton, fob Basra	4,128,000
Sales revenue from 17,000 tons of sulfuric acid (50 T/D) at ID 10 per metric ton	170,000
Total Annual Income	4,298,000
Annual Costs	
Production costs of 258,000 tons of ammonium sulfate	2,415,900
Production costs of 17,000 tons of sulfuric acid	104,300
Bagging costs of 258,000 tons of ammonium sulfate at ID 1 per metric ton	258,000
Loading costs of 258,000 tons of ammonium sulfate at ID 1 per metric ton	258,000
General expenses (sales, etc.) at 8% of Sales Income	343,800
Total Annual Costs	3,380,000
Gross Profit	918,000
Return on Total Capital	13.5%

TABLE 39

ESTIMATED CAPITAL INVESTMENT FOR AMMONIUM SULFATE PLANTS WITH CAPACITIES OF 190 AND 380 TONS PER DAY

	Capital Investment Requirements (ID) at Stated Capacity	
	Case I	Case II
Ammonia (tons per day)	50	100
Sulfuric Acid (tons per day)	200[1]	350[1]
Ammonium Sulfate (tons per day)	190	380

	Capital Investment Requirements (ID) At Stated Capacity	
	Case I	Case II
Ammonia Plant		
Process Plant (gas drive)	1,500,000	2,100,000
Auxiliary Facilities	455,000	660,000
Total	1,955,000	2,760,000
Sulfuric Acid Plant		
Process Plant	500,000	580,000
Auxiliary Facilities	108,000	145,000
Total	608,000	725,000
Ammonium Sulfate Plant		
Process Plant	227,000	380,000
Auxiliary Facilities	455,000	565,000
Total	682,000	945,000
Total Fixed Capital Investment	3,245,000	4,430,000

1. Includes extra capacity of 50 tons per day to supply other users of sulfuric acid.

TABLE 40

ESTIMATED MANUFACTURING COST OF ANHYDROUS AMMONIA

Plant Operation: 340 days per year, 3 eight-hour shifts per day

Item	Units	ID per Unit	Units per Metric Ton	Costs (ID per Metric Ton) at Stated Production Rates: 50 Metric Tons per Day	Costs (ID per Metric Ton) at Stated Production Rates: 100 Metric Tons per Day
Raw Materials					
Natural Gas	MCF	0.008	28.8	0.230	0.230
Caustic Soda	Pounds	0.015	8.25	0.124	0.124
Ethanolamine	Pounds	0.143	0.44	0.063	0.063
Other	-		-	0.157	0.157
				0.574	0.574
Catalysts					
Shift	Pounds	0.270	0.275	0.074	0.074
Synthesis	Pounds	0.250	0.220	0.055	0.055
Reforming	Pounds	0.465	0.110	0.051	0.051
				0.180	0.180
Utilities					
Natural Gas					
Compressors	MCF	0.008	12	0.096	0.096
Process Heating	MCF	0.008	8	0.064	0.064
Steam	MCF	0.008	8	0.064	0.064
Electricity	KWH	0.002	100	0.200	0.200
Process Water	1000 gal	0.038	0.83	0.032	0.032
Cooling Water Makeup	1000 gal	0.007	6.3	0.044	0.044
				0.500	0.500
Operating Labor					
8 men/shift		0.125	-	0.512	0.256

TABLE 40 (Continued)

ESTIMATED MANUFACTURING COST OF ANHYDROUS AMMONIA

Item	Units	ID per Unit	Units Per Metric Ton	Costs (ID per Metric Ton) at Stated Production Rates: 50 Metric Tons per Day	Costs (ID per Metric Ton) at Stated Production Rates: 100 Metric Tons per Day
Supervision and Burden					
100% of Operating Labor	-	-	-	0.512	0.256
Factory Overhead					
100% of Labor & Supervision		-	-	1.024	0.512
Miscellaneous					
50% of Operating Labor		-	-	0.256	0.128
Maintenance (Labor & Materials)					
4% of Investment		-	-	4.600	3.247
Depreciation					
8½% of Investment		-	-	9.775	6.900
Other					
2% of Investment		-	-	2.300	1.623
Total Production Cost[1]				20.233	14.176

1. Interest on Total Capital included in ammonium sulfate costs.

TABLE 41

ESTIMATED MANUFACTURING COST OF SULFURIC ACID

Plant Operation: 340 days per year, 3 eight-hour shifts per day

Item	Units	ID per Unit	Units Metric Ton	Costs (ID per Ton) at Stated Production: 200 Metric Tons per Day	Costs (ID per Ton) at Stated Production: 350 Metric Tons per Day
Raw Materials					
Sulfur	Metric ton	15.000[1]	0.34	5.100	5.100
Catalyst	Liters	1.070	0.0044	0.005	0.005
Miscellaneous	0.5% of Investment	-		0.045	0.031
				5.150	5.136
Utilities					
Power	KWH	0.002	11	0.022	0.022
Water					
Process	1000 gal	0.038	0.47	0.018	0.018
Cooling (Makeup)	1000 gal	0.007	0.44	0.004	0.004
Steam (credit)	1000 lb	0.008	2.2	(0.018)	(0.018)
				0.026	0.026
Operating Labor	Man-hr	0.125	-	0.140	0.080
Supervision					
50% of Operating Labor	-	-	-	0.070	0.040
Labor Overhead					
100% of Labor & Supervision	-	-		0.210	0.120
Factory Overhead					
100% of Labor & Supervision				0.210	0.120
Maintenance					
4% of Investment				0.360	0.244
Depreciation					
7% of Investment				0.630	0.427
Miscellaneous					
1% of Investment				0.090	0.061
Total Production Cost[2]				6.886	6.254

1. Based on estimated export sales price of sulfur, fob Basra.
2. Interest on Total Capital included in ammonium sulfate Costs.

TABLE 42

ESTIMATED MANUFACTURING COST OF AMMONIUM SULFATE

Plant Operation: 340 days per year, 3 eight-hour shifts per day

Item	Units	ID per Unit	Units per Ton	Cost (ID per Ton) at Stated Production: 190 Metric Tons per Day	Cost (ID per Ton) at Stated Production: 380 Metric Tons per Day
Raw Materials					
Sulfuric Acid	Metric tons	6.886	0.780	5.371	
		6.254	0.780		4.878
Ammonia	Metric tons	20.233	0.261	5.281	
		14.176	0.261		3.700
				10.652	8.578
Utilities					
Natural Gas (Drying)	MCF	0.008	1.2	0.010	0.010
Natural Gas (Steam)	MCF	0.008	0.22	0.002	0.002
Electricity	KWH	0.002	29.7	0.059	0.059
Process Water	1000 gal	0.038	0.20	0.008	0.008
Cooling Water	1000 gal	0.007	1.06	0.007	0.007
				0.086	0.086
Operating Labor	Man-hr	0.125	-	0.100	0.075
Supervision					
50% of Operating Labor	-	-	-	0.050	0.038
Labor Overhead					
100% of Labor & Supervision	-	-	-	0.150	0.113

TABLE 42 (Continued)

ESTIMATED MANUFACTURING COST OF AMMONIUM SULFATE

Item	Units	ID per Unit	Units per Ton	Costs (ID per Ton) at Stated Production: 190 Metric Tons per Day	Costs (ID per Ton) at Stated Production: 300 Metric Tons per Day
Factory Overhead					
100% of Labor & Supervision	-	-	-	0.150	0.113
Maintenance					
3% of Investment	-	-	-	0.316	0.219
Depreciation					
8½% of Investment	-	-	-	0.895	0.620
Miscellaneous					
2% of Investment	-	-	-	0.210	0.146
				12.609	9.988
Interest					
4% on Total Capital				2.160	1.490
Total Production Cost				14.769	11.478

TABLE 43

ESTIMATED PROFITS FROM AMMONIUM SULFATE MANUFACTURE

	CASE I	CASE II
Plant Capacity (Metric Tons per Day)		
Ammonia	50	100
Sulfuric Acid	200	350
Ammonium Sulfate	190	380
Plant Investment	3,245,000	4,430,000
Working Capital	240,000	380,000
Total Capital	3,485,000	4,810,000
Annual Sales of Ammonium Sulfate (Tons)	64,500	129,000
Income from Sales (Ammonium Sulfate) ID at ID 16/Ton, fob Basra	1,032,000	2,064,000
Annual Sales of Sulfuric Acid (Tons)	17,000	17,000
Income from Sales (Sulfuric Acid) ID at ID 10/Ton	170,000	170,000
Total Sales Income	1,202,000	2,234,000
Cost of Manufacture		
Ammonium Sulfate	952,600	1,480,660
Sulfuric Acid (17,000 tons)	117,060	106,320
Bagging (ID 1 per ton)	64,500	129,000
Loading Cost (ID1 per ton)	64,500	129,000
General Expenses (sales, etc.)		
8% of Sales Income	96,160	178,720
	1,294,820	2,023,700
Gross Profit	- 92,820(Loss)	210,300
Return on Total Capital - %	-	4.4

9. Appendix

a. Possibility of Producing 20% Granulated Ammonium Nitrate

The report explains that the absence of adequate experimental data on the use of fertilizers in Iraq makes it very difficult to offer a firm recommendation for fertilizer production in Iraq. It has not yet been demonstrated which particular type of fertilizer would give the best results, or that fertilizers can be used in Iraq under local conditions of farming to increase yields on a consistent basis.

Although it is clear that a substantial increase in domestic consumption (at present less than one day's output of a plant of minimum economical size) would follow if supplies of fertilizer were made available at a low cost, there is no evidence to suggest that it would rise to more than a small fraction of the output of a modern plant. It is therefore necessary to produce in Iraq a type of fertilizer for which there is a satisfactory world market. This requirement seems to be most satisfactorily met by ammonium sulfate, for which, at present, demand exceeds world supply. Since Iraq's soils are deficient in nitrogen content and since ammonium sulfate is used extensively in areas with similar soil conditions, ammonium sulfate seems to offer the most attractive industrial opportunity.

The report does, however, point out that detailed investigation of export market conditions and further data on fertilizer use in Iraq might reveal that one of the other forms of nitrogenous fertilizer (ammonium nitrate or urea) would be more suitable.

Estimated investment and operating costs for a plant to produce granulated ammonium nitrate (20.5% nitrogen) from limestone and ammonium have been prepared and are presented for comparison with those of an ammonium sulfate plant. As in the case of the ammonium sulfate plant, production would be at a rate of 760 metric tons per day. Production costs of ammonia have not been shown separately, as these are the same as those shown in the report. A greater total capital would be required for the ammonium nitrate-limestone plant, but the production cost would be somewhat less. A comparison of the investment and operating costs is:

	Ammonium Sulfate (21%N)	Ammonium Nitrate-Granulated Limestone (20.5%N)
Total Capital Required	ID 6,780,000	ID 7,350,000
Production Cost (ID/Metric Ton Bagged)	10.364	9.033
Cost (ID/Metric Ton N)	49.353	44.062

Estimated capital investment for a plant to produce 760 metric tons of 20.5%N Ammonium Nitrate-Limestone mixture per day:

Item	Total Estimated Investment Cost (ID)	
Ammonia Plant (200 T/D)		
Process Plant (gas drive)	2,900,000	
Auxiliary Facilities	690,000	
Total		3,590,000
Ammonium Nitrate-Limestone Plant		
Process Plant, Including Granulation	1,920,000	
Auxiliary Facilities	860,000	
Storage (75,000 tons of finished product)	450,000	
Total		3,230,000
Total Fixed Capital		6,820,000
Working Capital		530,000
Total Capital		7,350,000

ESTIMATED MANUFACTURING COST OF AMMONIUM NITRATE-LIMESTONE MIXTURE (20.5%N)

Plant Capacity: 760 metric tons per day
Plant Operation: 340 days per year, 3 eight-hour shifts
Investment: ID 3,230,000 (exclusive of ammonia plant)

Item	Units	ID per Unit	Units Per Metric Ton	Cost (ID Per Metric Ton)
Raw Materials				
Ammonia	Metric ton	9.486[1]	0.24	2.276
Limestone	Metric ton	1.900	0.39	0.741
Bags	Bag	0.100	20	2.000
				5.017
Catalyst	Gram	2.000	0.025	0.050
Utilities				
Natural Gas	MCF	0.008	0.25	0.002
Steam	Balanced load	-	-	0.000
Water (Cooling, etc.)	-	-	-	0.100
				0.400
Electricity	KWH	0.002	200	0.502
Operating Labor				
15 men/shift	Man-hr	0.125	0.474	0.059
Overhead and Burden				
100% of Operating Labor	-	-	-	0.059
Maintenance (Material and Labor)				
4% of Investment (ID 3,230,000)	-	-	-	0.500

Item	Units	ID per Unit	Units Per Metric Ton	Cost (ID Per Metric Ton)
Miscellaneous Services	-	-	-	0.200
Factory Burden				
15% of Utilities, Labor, Overhead and Burden, Maintenance and Miscellaneous Services	-	-	-	0.196
Depreciation				
8½% of Investment (ID 3,230,000)	-	-	-	1.062
Insurance, etc.				
2% of Investment (ID 3,230,000)	-	-	-	0.250
				7.895
Interest				
4% on Total Capital (ID 7,350,000)	-	-	-	1.138
Total Manufacturing Cost	-	-	-	9.033

1. Cost taken from Table 34.

ESTIMATED PROFITS FROM PRODUCTION AND EXPORT SALE OF AMMONIUM NITRATE-LIMESTONE MIXTURE (20.5%N)

Plant Investment:	ID 6,820,000
Working Capital:	530,000
Total Capital	ID 7,350,000

Annual Income	
Sales revenue from 258,000 tons at ID 16 per ton fob Basra	4,128,000
Annual Costs	
Production Costs of 258,000 tons of ammonium nitrate-limestone mixture	2,330,500
Loading costs of 258,000 tons at ID 1 per metric ton	258,000
General Expenses (sales, etc.) at 8% of Sales Income	343,800
Total Annual Costs	2,932,300
Gross Profit	1,195,700
Return on Total Capital	16.2%

b. Reasons for the Recommendation to Manufacture Sulfuric Acid by the Contact Process

The contact process for the manufacture of sulfuric acid in the proposed fertilizer plant was chosen because experience has shown that this process is much more economical than the chamber process or modifications of the chamber process, when elemental sulfur is used as the raw material. In the United States, where elemental sulfur is used, the contact process is in very wide use and the chamber process has declined in importance. In 1952, the chamber process was used to produce only 20% of the sulfuric acid produced, in comparison with 75% in 1921. The largest remaining consumer of chamber acid in the United States is the fertilizer industry, but the contact process is replacing it even in this field.

The chamber process, or modifications of it, such as the tower process, is, however, much more commonly used in Europe, where large supplies of low-cost pure sulfur are not available and it is necessary to use pyrites or ore. When these lower-grade materials are used, the contact process is unsatisfactory, as the platinum or vanadium catalyst used is sensitive to contamination in the feed stock and an extensive wet-purification installation is required for the scrubbing of the sulfur dioxide. If on the other hand, relatively pure elemental sulfur is burned, wet scrubbing of the sulfur dioxide can be eliminated and a simple hot-gas cleaning system used instead. In the United States, the original capital investment for a contact

plant using sulfur may be as low as 40% of the investment cost required for an equivalent contact plant using ore and requiring a complete purification system. Iraq's supplies of elemental sulfur strongly favor the use of the contact process, as it would require a smaller investment and would provide sulfuric acid at a lower cost than the alternative processes.

Because the tower process has been used to only a limited extent, if at all, in the United States, cost information is not readily available. Two European modifications of the chamber process have, however, been used in the United States. These are the Opl System and the Petersen Process, both of which replace some or all of the lead chambers of the chamber process with packed towers, through which the nitrous oxide-sulfuric acid mixture is circulated and allowed to react with sulfur dioxide. The lack of cost information on the tower type of process makes it impossible to present a cost comparison.

c. Possible Export Markets for Phosphates

Information is not readily available on possible export markets for Iraq's recently discovered supplies of phosphate rock. The collection of such information would entail considerable new work, particularly in view of the limited data that are available on the extent and analysis of the deposits. It is possible, however, to give some general information that may be of assistance.

The principal use for phosphate rock is in the manufacture of phosphatic fertilizers, which are used primarily in Western Europe and the United States. About 80%-90% of the phosphate rock that is used in the United States is used in the manufacture of fertilizers, with the balance used for the manufacture of phosphorus and phosphorus chemicals. In Europe, the emphasis on fertilizer manufacture is even greater than in the United States, and only a very small percentage of the phosphate rock is used for other purposes.

Most of the U.S. exports of phosphate rock come from Florida. The rock analyzes 68%-77% BPL (bone phosphate of lime = $Ca_3(PO_4)_2$) and is priced at ID 1.600 to ID 2.300 per ton fob Florida port. This price is the same for domestic and export shipments. Other high-quality rock comes from Morocco and Jordan. There appears to be adequate phosphate rock available at the present time and indications are that Jordan's plans for the establishment of a phosphatic fertilizer plant will probably not reduce the amount of her exports.

It is estimated that in order to compete on world markets, Iraq's phosphate rock would have to analyze 75%-77% BPL, although further investigation would be necessary to confirm this. Unfortunately, the initial analyses of Iraq's recently discovered deposits indicate only 68%-73% BPL.

Transport costs to the nearest port of shipment seem likely to preclude the profitable export of phosphate rock on the basis of the present world prices, but further investigation should take place when detailed information about the analyses and extent of the phosphate deposits has been obtained.

G. MANUFACTURE OF PLASTIC MATERIAL

Plastic materials have become very important throughout the world in recent years and their production is rapidly expanding. Iraq's supplies of natural gas suggest that she should consider entering this expanding new industry. Natural gas can be used as a raw material for a variety of plastics and the selection of a suitable substance for manufacture must depend on an assessment of potential domestic and export markets and the possibility of using additional indigenous materials. These criteria seem to be well satisfied by ethylene. From it can be made polyethylene, of which world consumption has recently begun to rise very rapidly, and polyvinyl chloride, for which demand is also growing. The production of polyvinyl chloride would also provide a market for the chlorine that will be made in the caustic soda operation required for the rayon plant. Thus, the production of ethylene would make it possible for Iraq to enter a new and expanding industry on the basis of her natural gas and salt resources. In view of the high price of wood and metal in Iraq, these plastic materials might find extensive domestic use.

1. Recommendations

1. Plants to produce the plastic materials, polyethylene and polyvinyl chloride, with annual capacities of 35 million lb and 10 million lb, respectively, should be established provided it is confirmed that:
   a. The manufacture of ethylene can be carried out as economically as preliminary investigations have indicated.
   b. Export markets will absorb the major share of the plants' output, as preliminary investigations have indicated.
2. In the event of ethylene production proving to be uneconomical, a study of the possibility of producing polyvinyl chloride from acetylene should be undertaken.

2. Ethylene Manufacture

a. Markets

The market for ethylene in Iraq would consist of the proposed plants to manufacture the plastic materials, polyvinyl chloride and polyethylene.

b. Resources

The principal domestic resource upon which the production of ethylene would draw would be the natural gas from the Zubair fields near Basra.

c. Method of Manufacture

The greater part of the ethylene manufactured in the United States at the present time results either as a by-product of the thermal and catalytic cracking operations of petroleum refineries, or as a product resulting from the thermal cracking of hydrocarbons, such as ethane, propane, and butane. Ethylene recovery via the former process must be associated with a rather large refinery if it is to be economically attractive. Thus, the

thermal cracking of hydrocarbons accounts for the major portion of ethylene production and this is the method that appears to be most suitable for Iraq, where natural gas is available to supply the hydrocarbons required.

The actual production process that is used is carried out in equipment similar to that used in the thermal-cracking operations of a refinery. Other processes have been developed but have not been widely adapted to commercial operation. The thermal cracking of ethane, extracted from natural gas, has been selected as the basis of this study, as thermal-cracking technology is well established and process designs are available from several engineering construction firms.

The production of ethylene would utilize gaseous ethane as a raw material. Extraction of ethane from natural gas would probably be carried out by an absorption process. Certain refrigeration methods of ethane extraction are now in use, but the majority of installations use an absorption method. In a typical process, the natural gas enters an absorption tower at a pressure of between 800 and 1500 psi (the actual pressure depending upon other process details) and comes in contact with a downward-flowing stream of absorption oil. The absorption oil is generally one of low molecular weight, approximately of the same cut as kerosene, to ensure maximum absorption. The ethane and the higher-order hydrocarbon components are absorbed by the oil, and the solution is removed from the bottom of the absorption tower. The gas from which the ethane and higher hydrocarbons have been removed leaves the top of the tower and consists principally of methane, with small amounts of ethane that were not absorbed.

The absorption oil containing the absorbed hydrocarbons is passed to ''stripping'' towers, where heat is applied by means of steam, and ethane (or ethane and propane, if propane is to be used also) is separated from the higher components.

The ethane, at a pressure of between 80 and 100 psi, is mixed with steam and sent through the tubes of the ''cracking'' furnace. The effluent from the furnace is at a temperature of 1400 to 1500F and consists of ethylene, hydrogen, unreacted ethane, methane, and impurities. This stream is quenched to 200F and compressed, after which the gas is scrubbed with caustic soda to remove carbon dioxide and then passed over a catalyst to convert acetylene (formed as a result of a side reaction) to ethylene and ethane. The catalyst is regenerated by passing hydrogen over it. After acetylene removal, the gas is compressed and dried, with the extent of drying depending on the type of process subsequently used to purify the ethylene.

The purification of the ethylene is generally carried out by one of two processes, each involving operation at low temperatures. One is an oil absorption process, which operates between minus 40F and 0 F; the other is a low-temperature fractionation process (a type of distillation), operating at about minus 165F. The selection of one process rather than the other requires a detailed study during the preparation of plant specifications, but the differences encountered are not considered to materially affect the process

economics. The use of the oil absorption process has been selected for purposes of this evaluation because more data is available on this particular method.

For purification, the dried gas is passed to a unit called a demethanizer (for methane removal), which operates at a pressure of 430 psi. The refrigerated oil that is used as the absorbing medium in this unit is pentane; this absorbs the ethane, ethylene, and heavier components. The gas stream that is vented from the top of the demethanizer contains hydrogen, with methane as the principal contaminant. Any absorption oil that is lost also appears in this stream. The vent stream can be used as a fuel or as a basic source of hydrogen, for example, for use in ammonia manufacture.

The stream leaving the bottom of the demethanizer is passed to a stripping tower, where the ethane and ethylene are separated as a single stream from the absorption oil, after which the ethylene and ethane are separated from each other. Depending upon the design of the system, ethylene purity can be varied between 95% and 98%. Any ethane that has not reacted is recycled to the cracking furnaces after separation from the ethylene. Over-all plant yield of pure ethylene is about 72%, based on the fresh ethane used.

d. Costs and Investment

Estimates have been prepared of the investment cost of constructing a plant to produce ethylene, and of its costs of manufacture. These are to be considered order-of-magnitude estimates that may be modified by further detailed study. As capital charges represent about 60% of the cost of producing ethylene, a detailed evaluation based on actual conditions of selected plant site, integration with other units, etc., must be made prior to the final decision.

Based on the cost estimates that have been prepared, it appears that a plant to produce 40 million lbs of ethylene annually is the smallest plant that should be considered in Iraq. Although a plant of this capacity is only one tenth to one fifth the size of those now being constructed in the United States, the estimates indicate that a plant of such size in Iraq would be able to produce ethylene at costs comparable with those in the United States.

It is estimated that a plant to produce 40 million lbs of ethylene from the ethane in natural gas would require a total capital investment of about ID 2,240,000, of which ID 1,965,000 would represent permanent investment, ID 250,000 working capital, and ID 25,000 startup expense. This does not allow for any costs of collecting natural gas, as these costs have been included in the price at which natural gas is charged to the process. Based on a natural gas charge of 8 fils per 1000 cubic feet to cover collection costs (6 fils) and transportation costs (2 fils) from Zubair to the plant site, it is estimated that it would, as shown in Table 44, cost 12.2 fils per

pound to produce ethylene. If ethylene were sold at a price of 18.5 fils per pound, a 10% return on the total capital could be realized (see Table 45). The price of 18.5 fils per pound compares favorably with the United States price of 18 to 21 fils.

No credit has been allowed for the sale of the hydrogen-rich off-gas that results from the manufacturing process. Sale of this gas, which can be used for a process such as ammonia manufacture (which requires hydrogen) or for fuel purposes, would, of course, reduce production costs, but as the use for this off-gas would depend on plant location selections, timing of construction of other plants, power-generation considerations, etc., no credit has been included. No allowance has been made for the conversion of the propane in the natural gas to ethylene. Use of the propane fraction would reduce production costs slightly.

Table 46 shows the effect of the price at which natural gas is charged on the total production cost. It will be seen that the effect is small and that only about a 4% variation in production cost results for each 10-fil change in the natural gas price. As no prices have been established for natural gas that is used for industrial operations, collection and transportation costs only have been used here.

e. Special Problems and Considerations

(1) Plant Location. The ethylene plant should be located as near as possible to its principal consumers. Transportation of ethylene is difficult because of its high vapor pressure, and it is desirable to have the ethylene production unit located adjacent to the polyethylene and polyvinyl chloride plants, or at least within economical pipeline distance. Erection of the ethylene, polyethylene, and polyvinyl chloride plants on the same property would reduce investment costs by effecting a sharing of certain common facilities, but this matter must be decided at the time specifications are being drawn.

Another factor that will enter into the selection of the plant location will be the decision regarding the use of the off-gases from the ethane extraction and ethylene production. As an example, if the off-gases, either the methane-rich gas from ethane extraction or a blend of the methane-rich gas with the hydrogen-rich gas from the ethylene production process, are to be used as fuel for power generation, the location of the ethylene plant should be as close as possible to the power plant, or within economical pipeline distance from it. Thus the location of the plant must be studied in relation to other plants that are to be erected in the near future.

(2) Use of Propane Fraction of the Gas. For purposes of evaluation, it has been assumed that only the ethane fraction of the gas would be used to produce ethylene. It will be necessary, however, also to use the propane fraction to reduce the natural gas requirements, if additional supplies of

pound to produce ethylene. If ethylene were sold at a price of 18.5 fils per pound, a 10% return on the total capital could be realized (see Table 45). The price of 18.5 fils per pound compares favorably with the United States price of 18 to 21 fils.

No credit has been allowed for the sale of the hydrogen-rich off-gas that results from the manufacturing process. Sale of this gas, which can be used for a process such as ammonia manufacture (which requires hydrogen) or for fuel purposes, would, of course, reduce production costs, but as the use for this off-gas would depend on plant location selections, timing of construction of other plants, power-generation considerations, etc., no credit has been included. No allowance has been made for the conversion of the propane in the natural gas to ethylene. Use of the propane fraction would reduce production costs slightly.

Table 46 shows the effect of the price at which natural gas is charged on the total production cost. It will be seen that the effect is small and that only about a 4% variation in production cost results for each 10-fil change in the natural gas price. As no prices have been established for natural gas that is used for industrial operations, collection and transportation costs only have been used here.

e. Special Problems and Considerations

(1) Plant Location. The ethylene plant should be located as near as possible to its principal consumers. Transportation of ethylene is difficult because of its high vapor pressure, and it is desirable to have the ethylene production unit located adjacent to the polyethylene and polyvinyl chloride plants, or at least within economical pipeline distance. Erection of the ethylene, polyethylene, and polyvinyl chloride plants on the same property would reduce investment costs by effecting a sharing of certain common facilities, but this matter must be decided at the time specifications are being drawn.

Another factor that will enter into the selection of the plant location will be the decision regarding the use of the off-gases from the ethane extraction and ethylene production. As an example, if the off-gases, either the methane-rich gas from ethane extraction or a blend of the methane-rich gas with the hydrogen-rich gas from the ethylene production process, are to be used as fuel for power generation, the location of the ethylene plant should be as close as possible to the power plant,or within economical pipeline distance from it. Thus the location of the plant must be studied in relation to other plants that are to be erected in the near future.

(2) Use of Propane Fraction of the Gas. For purposes of evaluation, it has been assumed that only the ethane fraction of the gas would be used to produce ethylene. It will be necessary, however, also to use the propane fraction to reduce the natural gas requirements, if additional supplies of

gas are not available in the Basra area when the plant is established. Use of only the ethane fraction of the gas would require a gross usage of 18.8 million cubic feet per day to produce 40 million lb of ethylene annually. Of this total, about 75% would be recovered as off-gas, principally methane, at a heat content of about 1100 Btu per pound instead of the original 1420 Btu per pound. An additional 2 million cubic feet of off-gas hydrogen per day would be available for blending with the methane.

Use of propane would reduce the gross natural gas usage to 12.6 million cubic feet per day. Of this, about 10 million cubic feet per day would be recovered as methane off-gas, and about 2.2 million cubic feet per day as hydrogen off-gas. Thus the use of propane will be very important if natural gas requirements for power generation are as high as forecast by 1973, and if no new gas supplies are available prior to that time.

(3) Additional Products. In the absorption of ethane from natural gas, higher hydrocarbons, such as propane, butane, pentane, and hexane, will also be absorbed. These will be later separated from the ethane (although it may be desirable to use the propane in ethylene manufacture), and substantial quantities can be recovered. These are natural gasoline fractions that have substantial markets in the United States and are used for blending with regular gasoline. If adequate domestic and/or export markets can be developed, the additional income would reduce the cost of ethylene manufacture. If propane is not used to manufacture ethylene, it would be possible to extract both it and butane for the production of LPG.

A by-product of the ''cracking'' of an ethane-propane mixture is propylene. The availability of this chemical might offer an opportunity for additional chemical manufacture. There are indications, for example, that some of the new polyethylene formulations may require the addition of propylene. Other chemicals that might ultimately be manufactured are isopropyl alcohol and propylene oxide. Effective separation of the propylene would require additional separation equipment, costing on the order of ID 100,000 to ID 200,000

f. Priority

The establishment of an ethylene plant would have to be coordinated with that of a polyethylene plant, so that a use would exist for the product when the plant came into operation. The establishment of a polyvinyl chloride plant of the proposed size would have little bearing on the timing of the ethylene plant, as only about 12% of the ethylene production would be required for this purpose. During any interim period between the establishment of the ethylene and polyethylene plants and that of a polyvinyl chloride plant, production of ethylene could remain slightly below capacity.

TABLE 44

ESTIMATED MANUFACTURING COST OF ETHYLENE FROM NATURAL GAS ETHANE

Production Capacity: 40 million lb per year
Operation: 330 days per year, three 8-hour shifts per day
Investment: ID 1,965,000

Item	Units	ID per Unit	Units per Pound	Cost (Fils Per Pound)
Raw Materials				
Ethane	Gal	0.0054[1]	0.466	0.250
Chemicals and Catalyst	-	-	-	0.540
General Supplies	-	-	-	0.040
				0.830
Utilities				
Boiler Feed Water	1000 gal	0.038	0.0011	0.042
Cooling Water (Makeup)	1000 gal	0.007	0.0036	0.025
Power	KWH	0.002	0.0200	0.040
Fuel	10^6 Btu	0.008	0.0166	0.133
				0.240
Operating Labor	Man-hr	0.125	0.0022	0.274
Supervision				
30% of Operating Labor	-	-	-	0.082
Plant Administration and Overhead				
100% of Labor and Supervision	-	-	-	0.356
Laboratory	-	-	-	0.360
Maintenance				
4% of investment	-	-	-	1.960
Depreciation				
10% of investment	-	-	-	4.910
Miscellaneous				
2% of investment	-	-	-	0.980
				9.992
Interest				
4% of Total Capital (ID 2,240,000)	-	-	-	2.240
TOTAL PRODUCTION COST				12.232

1. Based on net heat value equivalent to natural gas at 8 fils per MCF.

TABLE 45

REQUIRED PRICE OF ETHYLENE TO YIELD 10% RETURN ON TOTAL CAPITAL

COSTS OF PRODUCTION AND SALE	
Operating Costs (40 million x 12.23 fils per pound)	ID 489,000
Expenses connected with Sales	10,000
Administrative Costs	18,000
	ID 517,000
REVENUE REQUIRED	
For breakeven operation	ID 517,000
Additional for 10% return on Capital (2,240,000)	224,000
TOTAL	ID 741,000
SALES PRICE	
$\frac{\text{ID } 741,000}{40,000,000}$ = 18.5 fils/pound	

TABLE 46

EFFECT OF NATURAL GAS PRICE ON PRODUCTION COST OF ETHYLENE

	COST (FILS PER POUND) AT STATED NATURAL GAS PRICE (FILS PER 1000 CUBIC FEET)					
	0	8	10	20	30	40
Raw Material						
Cost (Ethane)	0	0.250	0.312	0.624	0.936	1.248
Fuel Cost	0	0.133	0.166	0.332	0.498	0.664
Other Costs	11.849	11.849	11.849	11.849	11.849	11.849
TOTAL PRODUCTION COST (ID PER METRIC TON)	11.849	12.232	12.327	12.805	13.283	13.761

3. Polyethylene Manufacture

a. Present and Potential Markets for Polyethylene

(1) Domestic Markets. Although there are, for all practical purposes, no domestic markets for polyethylene at the present time, it should be possible to develop rather substantial markets in the years ahead, particularly if supplies are available at reasonable prices. Initially, markets could best be developed in the building and the agricultural fields, where the experience and assistance of architects, construction engineers, and sanitary engineers would be most valuable.

The building industry elsewhere has found polyethylene to be suitable for many uses. For example, it has found use in the form of unsupported film as a moisture barrier and has been used beneath concrete-slab foundations to prevent deterioration of wood or structural members by ground moisture, and as a covering for materials stored in the open air. It has also found widespread use in pipe form in rural household-piping systems. About 80% of all plastic pipe manufactured in the United States today is made from polyethylene. Polyethylene pipe has found use in wells and sprinkling systems. Although its flexibility in relation to other pipe materials has made it readily adaptable to use in rough terrain, only one type of polyethylene (low-modulus) is flexible enough for such use. The other type (high-modulus) is more suitable for household and industrial piping, as it is more rigid and has a higher softening point than the low-modulus type.

Agricultural applications that might be possible in Iraq, based on experience elsewhere, would be its use as polyethylene film for irrigation pond and ditch liners; as a sunshade for tobacco plants; as a covering for small field plants to prevent weed growth; as a cover for seed beds during fumigation; and as a protective wrapping for roots and other delicate parts of plants and trees during transportation and handling.

Other markets might be developed for polyethylene, but these would probably follow the development of the agricultural and industrial markets. Because articles can be molded from polyethylene in small installations, such items as housewares (bowls, baskets, etc.) and toys fabricated in small workshops have become a small but important outlet for polyethylene. Considerable promotion and sales expense is necessary to achieve acceptance for goods of this kind, and a new industry might well wish to leave the development of such markets for future years.

(2) Export Markets. It is not possible to provide detailed information on the export markets that exist for polyethylene, although it is possible to indicate the magnitude of the total world markets and the growth that has taken place in them. The principal growth in demand and production that has taken place to date has involved the low-modolus type of polyethylene, but the major share of future consumption will probably be met by the newer, high-modulus type.

Production of polyethylene first began in the late 1930's and sizable quantities were produced during World War II for use in high-frequency electronic equipment as wire insulation. In the United States, production rose from an estimated 15 million lb in 1946 to about 420 million lb in 1955, and production lagged behind demand until 1955. Table 47 shows an estimate of United States markets for both low-modulus and high-modulus polyethylene in 1955 and 1960.

The United States has not been the only country to show a rapid increase in demand for polyethylene. Table 48 lists the estimated total world production capacity of polyethylene in 1955 and 1960. The United

States is currently exporting about 50 million lb of polyethylene annually, while the United Kingdom is exporting 10-20 million lb. Western Germany, France, and Italy have all announced intentions of erecting polyethylene-producing facilities to supply their domestic markets and to permit the establishment of export markets. All projected facilities that have been announced to date will probably be in operation by 1960.

TABLE 47

ESTIMATED UNITED STATES MARKETS FOR POLYETHYLENE, 1955 AND 1960

(Millions of Pounds)

	1955	1960
Conventional, Low-Modulus Type		
Unsupported Film and Sheet	125	300
Wire and Cable Insulation	42	60
Pipe	40	80
Molded Housewares, Toys, and Industrial Goods	83	60
Laminates	20	50
Bottles, Jars, Tubes, and Closures	12	20
Other	48	-
TOTAL LOW-MODULUS TYPE	370	570
High-Modulus Ethylene		
Molded Houseware, Toys, and Industrial Goods	Nil	110
Unsupported Film	Nil	50
Pipe	Nil	40
Sheet	Nil	30
Laminates	Nil	30
Wire and Cable Insulation	Nil	25
Bottle, Jars, Tubes, and Closures	Nil	15
TOTAL HIGH-MODULUS TYPE	-	300
TOTAL POLYETHYLENE	304	795

Source: Arthur D. Little, Inc., estimates.

TABLE 48

ESTIMATED WORLD PRODUCTION CAPACITY OF POLYETHYLENE, 1955 AND 1960

(Millions of Pounds)

	1955	1960
Conventional, Low-Modulus Polyethylene		
United States	300	600
United Kingdom	50	100
Canada	25	50
Western Germany	11	40- 50
France	5	15- 20
Italy	5	15- 20
TOTAL LOW-MODULUS POLYETHYLENE	396	820- 840
High-Modulus Polyethylene		
United States	Nil	300
Western Germany	Nil	50- 100
Italy	Nil	25- 50
Other	Nil	100
TOTAL HIGH-MODULUS POLYETHYLENE	-	475- 550
TOTAL POLYETHYLENE	396	1295-1390

SOURCE: Arthur D. Little, Inc., estimates based on field work and published material.

Thus, although world demand for polyethylene will continue to increase at substantial rates, production capacity will also continue to increase, with the result that competition will be keen. Iraq would have to produce polyethylene of a quality comparable with that made in the United States and the United Kingdom in order to compete favorably in world markets. Considerable development work would be necessary to gain entrance to existing world markets and to stimulate the growth of markets for polyethylene in countries where its use has not yet become popular.

Iraq's best markets would probably be in the Near and Far East and possibly in Eastern Europe. Data are not available at this time on the magnitude of markets for polyethylene in these areas, but its wide applicability and the past and anticipated growth in demand for it elsewhere indicate that markets can be developed.

b. Types and Uses of Polyethylene

Two basic methods of polyethylene production exist, and each results in products having different characteristics and thus, in many cases, different

markets. Production until recently has been by the conventional high-pressure process. This process is patented by Imperial Chemical Industries, Ltd., whose patents are due to expire very shortly. It produces what is known as low-modulus polyethylene. More recently two newer, low-pressure processes have been developed, one by Dr. Karl Ziegler of the Max Planck Institute for Coal Research, Mulkeim, Germany, and the other by the Phillips Petroleum Company, Bartlesville, Oklahoma, U.S.A. Both are generally available for licensing. These two processes produce a high-modulus polyethylene. The greater part of future market growth will probably be captured by the newer, high-modulus polyethylene, and this is the type that probably should be selected for use in Iraq, although final decision must await further market data and information on operating experience with both processes. The uses of both types will be reviewed in this report, however, as they are similar, despite the fact that in many cases separate and distinct markets will exist for them.

(1) Conventional, Low-Modulus Polyethylene. The principal use of this type (see Table 47) has been and will probably continue to be as unsupported film for packaging consumer goods, mainly food products and textiles. About 80% of the total amount of film produced of this type is used for packaging purposes (see Table 49). The manufacture of film requires exacting techniques and high-quality polyethylene, and it is not uncommon for manufacturers to spend three to six months solving various operational problems before a satisfactory film is produced. Other uses of film are found in the building industry and in agriculture, where the excellent moisture-barrier characteristics of the film are very valuable. Such uses, although small in volume in comparison with packaging uses, are expected to grow in the future. Another use of conventional polyethylene, and one of the first to be developed because of its excellent dielectrical properties at high frequency, is as wire and cable insulation. This market is not expected to grow appreciably in the future.

TABLE 49

END-USES OF POLYETHYLENE FILM

1954	
End-Use	% of Total Polyethylene Film Consumed
Bags for Food Products	45
Bags for Textiles	25
Other Packaging Uses	8
Moisture Vapor Barriers	6
Miscellaneous	16
	100

Source: Arthur D. Little, Inc., estimates.

The use of conventional polyethylene to produce pipe represents a substantial market. Although the low softening point of polyethylene (below the boiling point of water) limits its use somewhat, it has found extensive use in the building industry as household piping, in sprinkler system installations, etc., and in the agricultural field for water-transportation purposes. Low-grade resins can be used effectively in pipe manufacture where temperature or pressure requirements are not critical.

Conventional polyethylene has also been used to manufacture articles that can be produced by injection molding. Toys and household articles, such as mixing bowls, tumblers, and waste-paper baskets, are now produced. The use of polyethylene to produce laminated materials has shown fair growth, but considerable skill is required to produce such laminates, and other uses have been more attractive to most manufacturers.

Although there was initially high hope on the part of manufacturers that polyethylene would be used in large volume to produce bottles, jars, tubes, and closures, conventional polyethylene is too flexible for general use and it is very permeable to odors and flavors (and is thus eliminated from many food, drug, and cosmetic uses). The newer, high-modulus type of polyethylene may overcome this objection of conventional polyethylene.

(2) High-Modulus Polyethylene. Although 1955 production of the new, high-modulus polyethylene was negligible, considerable expenditure on new plants has been made and capacity by 1960 is predicted to exceed the present capacity of conventional, low-modulus polyethylene.

The unsupported film that can be made from high-modulus polyethylene is expected to replace the use of low-modulus film in the building industry and agricultural uses. The rate at which the new type of film transmits moisture is significantly less than the rate for conventional polyethylene film, and the strength of the new type of film is greater. As a result, thinner sheets of the new film can be used. Although this newer film is not expected to replace conventional film in consumer packaging, since the conventional type has greater consumer appeal and a higher bursting strength, it may, as the clarity of the film is improved, compete with cellophane in certain applications.

The higher heat-resistance of high-modulus polyethylene and the lower rate of moisture-vapor transmission make it a better material for wire and cable insulation, but there are environmental-stress-cracking characteristics that appear at this time to make it inferior to the conventional polyethylene and may limit its uses as buried or aerial wire.

One of the major uses foreseen for high-modulus polyethylene is that of pipe manufacture. The increased strength and higher softening point over those of conventional use should enable it to find appreciable markets in industrial and household piping applications.

The largest market for the new type of polyethylene is expected to result from its use for molded goods. This type should not only obtain part of the market now held by conventional polyethylene, but should also capture a considerable portion of the plastics applications now held by polystyrene, since the latter is generally more brittle.

Provided that certain problems concerning its permeability to some materials, its clarity, and its speed of molding can be solved, high-modulus polyethylene is expected to become an important material for rigid containers. Much depends, of course, on consumer acceptance, but the advantages of high-modulus polyethylene over low-modulus suggest very promising prospective markets.

c. Resources

The principal raw material for polyethylene manufacture would be ethylene produced as described in the preceding section. Other raw materials would consist mainly of catalysts and minor chemicals that would have to be imported.

d. Method of Producing Polyethylene

Three principal methods of producing polyethylene are in use today. A method developed by Imperial Chemical Industries, Ltd., employs high-pressure techniques and is responsible for the bulk of the polyethylene produced in the past. Two other methods employ relatively low pressures, and most of the future production capacity to be installed is expected to employ one of these two newer processes.

For purposes of this evaluation, the newer, low-pressure processes have been considered, although more detailed consideration of polyethylene manufacture may indicate that the older, high-pressure process would be more desirable for production in Iraq. To illustrate the type of process required, a description of the Phillips Company low-pressure process has been selected.

In this process, the ethylene is first treated in a ''demethanizer'' unit to remove any methane impurity that may be present, and then in a ''de-ethanizer'' unit to remove any unreacted ethane impurity. This results in a product of 99+% purity. Lower-purity ethylene could be used, but the higher-purity product is more desirable. Oxygen, water, and carbon dioxide are then removed by passing the gas through appropriate treating materials (hot metallic copper for oxygen, anhydrous calcium sulfate for water, and caustic soda for carbon dioxide).

The purified ethylene is then dissolved in a hydro carbon solvent; the resulting solution is brought to the desired temperature and pressure (350 to 500F and 500 to 1500 PSI) and sent to a reactor vessel, where it comes into contact with a catalyst, such as molybdenum oxide supported on an alumina base. The reaction that takes place in the presence of the catalyst results in the formation of polyethylene, as the molecules of ethylene are joined together.

The product from the reactor is sent to a separator, where the pressure is reduced and the gas and hot solution separated. The gas is returned to the reactor and the solution is sent to a filter to remove the entrained catalyst. The filtrate from the filter unit is cooled, causing the high-molecular-weight polyethylene to separate as a solid and to form a slurry with the solvent. Filtration of this slurry results in a polyethylene product for final finishing treatment.

e. Costs and Investment

Estimates have been prepared of the cost of erecting a polyethylene plant in Iraq and of producing the polyethylene by the low-pressure Phillips process. These costs, which would have to be confirmed by more detailed study, indicate the return that could be expected on the investment involved. The price at which ethylene can be produced will have a significant bearing on the cost of polyethylene production and thus the return on investment, but for purposes of this estimate, a price of 18.5 fils per pound has been used.

It is estimated that the total capital cost to erect a plant with an annual capacity of 35 million lb of polyethylene would be ID 3,800,000, of which ID 3,500,000 would represent permanent investment, ID 270,000 would represent working capital, and ID 30,000 would represent startup expense. The estimated cost of producing the polyethylene (see Table 50) would be 71 fils per pound. A selling price of 108 fils per pound has been selected to represent a realistic future price, because of the increasing volume of polyethylene production. The present price of high-grade polyethylene in the United States is about 146 fils per pound, and that of low-grade polyethylene about 111 fils to 132 fils per pound. The present selling price of high-pressure polyethylene in Europe is about 178 fils per pound, while that in Great Britain is 168 fils per pound.

Based on a sales price of 108 fils per pound and a production cost of 71 fils per pound, it is estimated that a return on the total capital on the order of 17% could be realized (see Table 51). Detailed costs have not been presented for the high-pressure method, but total capital requirements for a plant of this type would be on the order of ID 4,500,000.

The profitability that is possible in relatively small polyethylene-fabricating operations is indicated in Tables 52 and 53, which show the order-of-magnitude costs and profits of plants fabricating polyethylene film and pipe. As indicated, each type, with a total production of 1 million lb of polyethylene film or pipe, would earn a return of almost 35% on total capital invested. Such operations are attractive to many businessmen because of their high profitability and could do much to encourage polyethylene usage in Iraq.

f. Special Problems and Considerations

(1) Selection of Process. As indicated in the information presented on the types of polyethylene, there are three basic processes for polyethylene production, one a high-pressure process and the other two relatively low-pressure processes. For the purposes of this report, evaluation has been based on the newer, low-pressure technique, as it is anticipated that this will be the type most widely used in the future. Production by this process is, however, relatively new, and further investigation and experience may indicate that in Iraq's case the older process might be more suitable.

As the products of the two processes are slightly different and their applications vary somewhat, final decision should take into account the domestic as well as export markets that could be developed for the particular type chosen.

(2) Plant Location. A polyethylene plant should be erected adjacent to or within economical pipeline distance of the ethylene plant. Both should be located in the Basra area, since the polyethylene would for the most part have to be exported, at least in the early stages of the new industry's life, and since its location near the port would reduce transport costs.

g. Priority

The polyethylene plant must come into operation simultaneously with an ethylene plant. Each plant could be under separate management, but their planning and construction should be very carefully coordinated.

TABLE 50

ORDER-OF-MAGNITUDE MANUFACTURING COST OF POLYETHYLENE

Investment: ID 3,500,000
Plant Capacity: 35 million lb per year
Operation: 330 days per year

Item	Units	ID per Unit	Units per Pound	Fils per Pound
Raw Materials				
Ethylene	Pounds	0.0185	1.08	19.98
Catalysts and Supplies	-	-	-	10.80
				30.78
Utilities				4.00
Labor	Man-hr	0.125	0.04	5.00
Supervision				
50% of Operating Cost				2.50
Plant Administration & Overhead				8.20

TABLE 50 (Continued)

Item	Units	ID per Unit	Units per Pound	Fils per Pound
Maintenance				
4% of Investment				4.00
Depreciation				
10% of Investment				10.00
Miscellaneous				
1% of Investment				1.00
				65.48
Interest				
4% of Total Capital (ID 3,800,000)				5.48
Total Production Cost				70.96

TABLE 51

ESTIMATED PROFIT FROM POLYETHYLENE OPERATION

Sales Income	
35 million lb annually at 108 fils per pound	ID 3,780,000
Cost of Sales	
Production costs of 35 million lb at 71 fils per pound	ID 2,485,000
Sales expense at 7% of sales	264,000
Administration, research, royalty at 10% of Sales	378,000
	ID 3,127,000
Profit	ID 653,000
Return on Permanent Investment	
$\frac{653,000 \times 100}{3,500,000} =$	18.6%
Return on Total Capital	
$\frac{653,000 \times 100}{3,800,000} =$	17.2%

TABLE 52

ORDER-OF-MAGNITUDE PROFITABILITY OF SMALL POLYETHYLENE-FILM FABRICATION PLANT

Production: 1 million lb of polyethylene film per year
Investment: ID 20,000
Working Capital: ID 20,000

Raw Material Costs (polyethylene at 108 fils per pound)	ID 108,000
Operating Costs	
Assumed to be 50% of raw material costs	54,000
Selling, General Administrative Expense	
Assumed to be 20% of Operating Costs	10,800
Total Costs	ID 172,800
Sales Revenue (at 186 fils per pound)	186,000
Gross Profit	ID 13,200
Return on Total Capital	33%

TABLE 53

ORDER-OF-MAGNITUDE PROFITABILITY OF SMALL POLYETHYLENE-PIPE FABRICATION PLANT

Production: 1 million lb of polyethylene pipe per year
Investment: ID 20,000
Working Capital: ID 20,000

Raw Material Costs (polyethylene at 84 fils per pound[1])	ID 84,000
Operating Costs	
Assumed to be 50% of Raw Material Cost	42,000
Selling, General Administrative Expense	
Assumed to be 20% of Operating Costs	8,400
Total Costs	ID 134,400
Sales Revenue at (148 fils per pound)	148,000
Gross Profit	ID 13,600
Return on Total Capital	34%

1. Low-grade.

4. Manufacture of Polyvinyl Chloride

a. Markets for Polyvinyl Chloride

(1) Present and Potential Domestic Markets. Consumption of polyvinyl chloride in Iraq is small at the present time, but exact figures are not available. Imports in 1955 from the United Kingdom were about 30,000 lb, almost three times the 1953 total of about 12,000 lb. The form in which it has been imported is not known, but it is probable that polyvinyl chloride imported in the form of finished goods or electrical insulation has not been included in the figures quoted.

Future markets for polyvinyl chloride in Iraq appear to be promising, but it is impossible to estimate the size to which they will grow. The many forms in which this plastic can be produced and the many uses to which its end products can be put offer numerous opportunities for successful application in Iraq. One that has found widespread use, for example, and one that could be used successfully in Iraq, is rigid polyvinyl chloride, particularly the unplasticized type. In this form, it can be used to make plastic pipe and fittings of excellent chemical resistance. These products would find ready markets in Iraq's future chemical industry. It also has agricultural applications and in certain other industries, for example, beverages and food processing, it might replace imported stainless steel and other corrosion-resistant alloys.

Another potential market for rigid polyvinyl chloride would be in the building industry, where because of its structural strength, color possibilities, and chemical resistance, it could be used for the manufacture of doors, panels, ceiling tile, drain spouts, and partition walls. Its use would be stimulated by the shortage of wood and the need for new and additional building materials.

Other forms of polyvinyl chloride might also find use in Iraq as development proceeds. Additional outlets for this plastic include its use for treating and coating textiles, for coating paper, for electrical insulation, and as protective coatings. Recently vinyl foam and sponge (similar to sponge rubber) have been developed.

(2) Export Markets. The consumption of vinylchloride resins on world markets has shown remarkable growth over the past 8 to 10 years. Complete figures are not available on world consumption, but the consumption in those countries for which figures are available indicates the magnitude of the market and the rate of growth. In the United States, for example, the largest single consumer in the world, consumption of polyvinyl chloride and its copolymer resins rose from about 136 million lb in 1947 to 550 million lb in 1955; it is expected to rise to about 700 million lb by 1960, as shown in Table 54.

Production in the remainder of the free world does not appear to approach the same level as that of the United States, but expansion has been

very rapid in the past few years, particularly in Europe, and almost as much potential capacity appears to exist in the rest of the world as in the United States. Imports and exports of countries for which figures are available are shown in Tables 55 and 56.

TABLE 54

POLYVINYL CHLORIDE-COPOLYMER RESIN PRODUCTION IN THE UNITED STATES

Year	Millions of Pounds
1950	325
1951	411
1952	356
1953	435
1954	420
1955	550
1960	700 (estimated)

Source: U.S. Tariff Commission, Synthetic Organic Chemicals.

TABLE 55

ESTIMATED IMPORTS OF POLYVINYL CHLORIDE BY VARIOUS COUNTRIES (POUNDS)

Country	1953	1954	1955
W. Germany	7,544,500	13,809,000	7,717,000
Sweden	2,482,000	6,254,000	5,773,000
France	4,235,000	3,368,000	4,106,000
Switzerland	N.A.	1,754,000[1]	2,922,000
	14,261,500	25,185,000	20,518,000

1. Approximate, based on first six months.
N.A. = Not available.

Source: Authur D. Little, Inc., estimates.

TABLE 56

ESTIMATED EXPORTS OF POLYVINYL CHLORIDE RESINS FROM VARIOUS PRODUCING COUNTRIES

(POUNDS)

Country	1953	1954	1955
U.S.A.	16,500,000	31,500,000	45,000,000
U.K.[1]	2,550,000	3,400,000	3,900,000
W. Germany	N.A.	8,930,000	8,652,000
Belgium	163,000	368,000	543,000
Sweden	1,390,000	1,820,000	2,480,000
France	3,042,000	8,181,000	9,300,000
Switzerland	N.A.	2,776,000	4,324,000
Italy[2]	N.A.	5,000,000	15,000,000
Japan	658,000	832,000	N.A.
	24,303,000	61,975,000	89,199,000

1. Very conservative estimate. Other data indicate three to five times that amount.

2. Estimated. Exports to United States in 1955 about 10 to 12 million lb.

Source: Arthur D. Little, Inc., estimates.

England has at least doubled its production capacity since 1953 and further expansion is planned. It is estimated that present capacity is between 80 and 100 million lb annually. Other countries, for example Western Germany, France, and Italy, are also increasing their production capacities to meet growing demands. Many countries that produce and export polyvinyl chloride also import it. The United States, for example, imports large amounts (estimated at 21 million lb in 1955) and Sweden, France, and Switzerland import and export polyvinyl chloride. It should be possible for Iraq to obtain a share of this expanding market, but further information and investigation are required to determine its probable magnitude and location.

b. Resources

The principal ingredients used in the manufacture of polyvinyl chloride are chlorine and either acetylene or ethylene. Whether acetylene or ethylene is used depends on the availability of the raw materials at the point of manufacture. An examination of reports on manufacturing facilities for vinyl chloride throughout the world reveals that the acetylene route is

generally adopted. It is estimated that 60% of the vinyl chloride manufactured in the United States and about 90% of that manufactured elsewhere is based on acetylene. The principal reason for the selection of acetylene is that the capital investment requirements for a polyvinyl chloride plant using acetylene are lower than for one using ethylene. Acetylene also serves as a starting point for the manufacture of other chemicals, such as acrylonitrile, vinyl acetate, and trichloroethylene. Selection of the acetylene route requires, however, that reasonably low-cost acetylene be readily available.

On the other hand, if ethylene can be made available at low cost near a chlorine-producing plant and selection between the two can be made, ethylene is usually selected, despite the large plant size required to produce it at low cost, because of its versatility as a raw material for chemical manufacture. Practically all chemicals that can be derived from acetylene can also be derived from ethylene. In addition, the by-product hydrogen evolved in ethylene manufacture can be used in operations, such as ammonia synthesis, that require a hydrogen supply and can be used at a lower cost than the by-product stream from acetylene manufacture.

(1) Acetylene. The bulk of acetylene produced throughout the world is derived from the reaction of calcium carbide with water. Iraq has no domestically manufactured calcium carbide at present and domestic manufacture is not considered practical because of the need to import coke at relatively high cost. Coke made from petroleum might supply the requirements and, in fact, is generally preferred because of its low ash content, although about 90% of the calcium carbide that is made uses coke from coal. Petroleum coke is prepared from heavy residual stocks and might offer a method of consuming excess residual production in the future.

The installation cost of a plant to produce petroleum coke would depend upon whether the substantial amounts of distillate products that would result in addition to the coke were to be recovered or flared. Decision to flare the products would reduce the required investment but would result in coke production bearing the entire capital and production costs. Selection of the proper charge stock for coke production would require considerable care, since most crude oils in the Middle East are high in sulfur and sulfur is undesirable in coke. In the case of acetylene manufacture, the presence of sulfur in the coke leads to the eventual production of a contaminant, vinyl sulfide, in the acetylene, which tends to make the gas unstable and explosive. Theoretically it is possible to scrub the vinyl sulfide from the gas if it is not to be stored, but the operation is a difficult one.

Acetylene can also be manufactured from natural gas, but the investment costs for a plant to produce it are high and a considerable degree of technical skill is required to reduce costs to the level of those obtainable via the calcium carbide route. The most important processes for producing acetylene from natural gas are the Sachse Partial Oxidation Process, the Shock Electric Arc Process, and the Wulff Thermal Cracking Process, none of

which has proven popular in the United States, despite the availability of large amounts of natural gas. Of the three processes, the Wulff Process appears to require the lowest capital investment and to result in the lowest production costs, but no large-scale commercial operations have been established and it is uncertain whether the estimated low costs will be realized in large-scale installations. Acetylene is produced on a large scale in two plants in the United States using a partial-oxidation type of process developed by Badische Anilin and Soda Fabrik of Germany.

(2) **Ethylene.** In view of the difficulties involved in the production of acetylene and the availability of plentiful supplies of natural gas in Iraq, ethylene seems to be the more satisfactory raw material for the manufacture of vinyl chloride in Iraq. Its manufacture is discussed in a separate section of this report.

(3) **Chlorine.** The production of polyvinyl chloride would serve as an excellent outlet and the only major one at present discernible for the output of the caustic soda and chlorine plant recommended elsewhere in this report. It would have to be available from domestic production sources, since the cost of chlorine represents a large portion of the total cost of polyvinyl chloride production, and since imported-chlorine costs are far too high to permit low-cost production, principally because of the need to import small quantities in special steel containers.

c. Types of Vinyl Chloride Resins

Vinyl chloride resins can be produced and used as polyvinyl chloride without any additives, or as a mixture of at least 50% vinyl chloride and another resin (such as vinylacetate, vinylidene chloride, or acrylonitrile). The mixtures are called copolymers. The trend in recent years has been toward an increasing use of polyvinyl chloride alone, as compounding techniques have been improved so as to obtain the desired product from one type of resin, usually the general-purpose grade.

A variety of resin types is currently produced; they are classified as general-purpose, electrical-grade, dispersing-grade, solution-grade, and miscellaneous. About 60% of the resin produced is of the general-purpose type, and it is expected that this percentage will hold in the near future. About 17% of the production is electrical-grade, used almost exclusively for wire and cable insulation. Little difference exists between the general-purpose and electrical-grade resins, although production of the electrical grade is probably somewhat more closely controlled. The effectiveness of the electrical grade as an insulating material is considered to be a function more of the proper compounding of the resin after production than of the properties of this grade of resin.

The dispersing grade, which finds its principal use for plastisols and organsosols that find application as fabric and paper coatings and pro-

tective coatings, is expected to increase in demand in the next few years. By 1960 it will, if present trends continue, probably account for about 20% of total vinyl resin consumption. Solution-grade vinyls, used mainly for protective coatings, and miscellaneous grades, which include unplasticized polyvinyl chloride, are only a small part of total vinyl resin production. New applications of rigid unplasticized polyvinyl chloride should, however, increase the demand for this type of resin.

d. Manufacture of Polyvinyl Chloride

The manufacture of polyvinyl chloride involves the production of vinyl chloride from ethylene and chlorine, and the polymerization, or linking, of the molecules of vinyl chloride to form a chain. The first step in the manufacture, once the ethylene has been obtained in a manner described in the preceding section of this report, is to add chlorine to the ethylene to form ethylene dichloride. This chlorination, which generally takes place in the presence of a catalyst, can be carried out as a gaseous- or liquid-phase reaction. No economic advantage is considered to be attributable to either system. The main reaction is carried out in a stainless steel tubular reactor at atmospheric pressure and at a temperature of 105F. Refrigerated water that is circulated through the tubes maintains this low temperature.

Chlorine and ethylene are bubbled through liquid ethylene dichloride that has been previously formed and is contained in the reactor on the outside of the refrigerated tubes. A small stream of ethylene dichloride, containing dissolved ferric chloride as a catalyst for the reaction, is also fed to the reactor. During the reaction, in addition to the ethylene dichloride that is formed, small amounts of hydrogen chloride, trichloroethane, and another form of ethylene dichloride (called unsymmetrical ethylene dichloride to differentiate it from the desired form, also called 1, 2 dichloroethane) are formed.

The ethylene dichloride and any unreacted ethylene are drawn off the top of the reactor and sent to a degassing tower, where the ethylene is stripped from the liquid and recycled to the reactor. A small purge stream of ethylene is withdrawn and is scrubbed with water to remove hydrogen chloride, after which this purge stream may be used as a fuel. The solution containing ethylene dichloride, after the gas has been removed from it, is distilled (rectified) to separate it from the trichlorethane and unsymmetrical ethylene dichloride. After distillation the product contains about 98% ethylene dichloride and is pure enough for further processing.

The ethylene dichloride is then subjected to a reaction of pyrolysis (chemical decomposition by heat), wherein one half of the chlorine present in the ethylene dichloride is converted to by-product hydrogen chloride, which is either used in other processes or discarded. The pyrolysis reaction is carried out in a tubular stainless steel reactor operated at about one atmosphere of pressure and maintained at a temperature of about 660F. The discharge from the reactor is cooled to condense the bulk of unreacted ethylene dichloride for recycle to the reactor. Further cooling to liquefy the vinyl-

chloride, followed by fractionation (a form of distillation), permits separation of the hydrogen chloride from the vinyl chloride. A second fractionation permits removal of the remaining ethylene dichloride and other impurities. Final purification of the vinyl chloride consists of washing it with caustic soda to remove all traces of hydrogen chloride and drying it with a drying agent, such as calcium chloride or alumina. If the vinyl chloride is not to be polymerized (a joining of vinyl chloride molecules to form a chain or polyvinyl chloride) immediately, an inhibitor such as phenol is added before storage to prevent any undesired polymerization. Polymerization of the vinyl chloride to form the polyvinyl chloride consists of linking a series of vinyl chloride molecules together under specified conditions of temperature and pressure until the desired molecular weight has been obtained. The vinyl chloride can be handled either as a water suspension or as a water emulsion during polymerization. The suspension process, however, has come to be preferred, since the particle size of the polyvinyl chloride that results is larger than that produced by the emulsion process, and the product is therefore easier to handle for water removal, washing, and drying, which take place after the polymerization reaction. The emulsion process is generally used whenever a latex is desired.

The actual polymerization is carried out in an autoclave, and unreacted vinyl chloride is recycled after removal from the polyvinyl chloride. The water is removed from the polyvinyl chloride and the latter is then washed and dried. The resultant product is ready for use alone or with plasticizers, to form the desired plastic products.

e. Costs and Investment

Estimates have been prepared of the investment required for and the cost of producing polyvinyl chloride in Iraq from ethylene, obtained from natural gas, and chlorine. The estimates have been based on the costs of producing the basic polymer, polyvinyl chloride, and do not include the addition of plasticizers, fillers, or other polymers. For purposes of the estimate, it has been assumed that 18 hours are required to polymerize the vinyl chloride to polyvinyl chloride, and that the packaged yield from the vinyl chloride is 90%. The costs are also based on production of the polyvinyl chloride in a plant that is an integrated unit from the beginning of the point of manufacture of ethylene dichloride through the operation of packaging the finished polyvinyl chloride.

The estimated investment costs are based on the erection in Iraq of a complete polyvinyl chloride plant (exclusive of ethylene recovery from natural gas, which is handled in a separate plant and for which costs are shown separately in the preceding section), with all normal auxiliary facilities necessary for the operation, maintenance, and administration of the plant. Wherever possible, allowance has been made for the use of outdoor type of construction for process facilities, furnaces, and boilers. Adjustment has been made in the estimates to account for the differences between

erection in Iraq and erection in the United States, but as capital costs are liable to vary from plant to plant, actual costs may differ from those estimated for purposes of evaluation, and more detailed estimates based on actual conditions would be required to confirm them before final decision is made. The effect of the capital costs on the total production cost of polyvinyl chloride is small, however, as raw material costs represent a large portion of the total costs. A 50% increase or decrease in the total capital requirements would alter the total production cost by only about 16%.

The estimates indicate that a total capital of ID 1,215,000 would be required to establish a plant to produce 10 million lb per year of polyvinyl chloride. Of the total capital, ID 965,000 would be as permanent investment, ID 214,000 would be as working capital, and ID 36,000 would represent start-up expense. The capacity of the plant has been selected to utilize almost all the chlorine produced in a caustic soda and chlorine plant of the size recommended for establishment elsewhere in this report.

Estimated operating costs, detailed in Tables 57 and 58, are based on the use of ethylene at a cost to the polyvinyl chloride operation of 18.5 fils per pound and of chlorine at a price of 13.7 fils per pound (ID 30/200 per metric ton). Both prices allow for a 10% return on the total capital required by the plants that produce them. The method of establishing the chlorine price is discussed in the report section on the production of caustic soda and chlorine. Based on the above assumptions, it is estimated that polyvinyl chloride could be produced in Iraq at a cost, including packaging, of 61 fils per pound.

Table 59 shows that an estimated profit of ID 200,000 per year and a return on investment of 16.5% could be realized from polyvinyl chloride production. It has been assumed for the purposes of this estimate that a sales price of 90 fils per pound fob plant would represent a realistic one for Iraq's production. The present selling price of polyvinyl chloride in the United States is 111 fils per pound, a recent drop from a price of 136 fils per pound. This price drop is thought to have been caused by increased production capacity, increasing imports, and the integration moves on the part of plastic users. It is anticipated that prices will now remain stable for one or two years, but that within four to five years the price will drop further, to about 90 fils per pound. Further price reductions are considered to be unlikely, in view of the rapidly increasing demand for the product and the general trend in the world of increasing raw material prices.

Polyvinyl chloride is currently selling (1956) in Europe at a price ranging from 75 to 87 fils per pound (depending on resin type). It is probable, in view of the estimated manufacturing cost of 61 fils per pound, that profitable exports of polyvinyl chloride could be made to European markets. Higher returns, however, would probably be secured from exports to Middle and Far Eastern markets, where substantial increases in demand can be expected and to which transport costs would be substantially less than from Europe or America.

During the formation of vinyl chloride, hydrogen chloride is released as a by-product. Whenever possible, manufacturers sell this by-product or use it in other operations, applying a credit to the vinyl chloride manufacturing operation. Iraq has no existing markets for by-product hydrogen chloride, and potential markets are not foreseen at this time. In the event that markets are later developed for this hydrogen chloride, it would be possible to reduce polyvinyl chloride manufacturing costs by 4 to 5 fils per pound and thus to increase annual profits by ID 40,000 to ID 50,000.

f. Special Problems and Considerations

(1) Production of Polyvinyl Chloride via Acetylene. In the event that further investigation fails to confirm the economic feasibility of manufacturing ethylene in Iraq, consideration should be given to the manufacture of acetylene, as it is an alternative raw material.

Two possible routes should be evaluated. Production via calcium carbide using petroleum coke would have the advantage of using excess residual oil and contributing towards the over-all economical use of Iraq's full resources. Marketing problems involved with the distillate products that result would arise and the high sulfur content of the charge stock might make the operation difficult, but the benefits that would result, particularly by permitting the establishment of a polyvinyl chloride and a caustic soda and chlorine plant would make it a possibility worthy of further investigation. It could also be produced from natural gas, particularly if the Wulff process proves to be economical on a commercial scale.

(2) Technological Skill. The manufacture of polyvinyl chloride, particularly the polymerization step, requires considerable technological skill and knowledge. This will be an extremely important factor if Iraq is to produce the high-quality, low-cost polyvinyl chloride that will be needed to compete in world markets. Product uniformity is essential and requires close control of operating variables. Continuous development of the product will also be necessary if Iraq is to keep abreast of world developments. The technology of polyvinyl chloride manufacture is available and the necessary arrangements should be made to obtain the services of persons experienced in polyvinyl chloride manufacture, to construct and operate the plant and to train Iraqi personnel.

(3) Technical Service. The producer of polyvinyl chloride must be prepared to supply technical service to the consumer. This is necessary since consumers often have difficulties in processing the resin and attribute the difficulties to the resin, although in fact the difficulties often lie with the application to which it is being put or to the equipment handling it. Unless technical service can be provided, the consumers become dissatisfied and buy their resins elsewhere. Arrangements would have to be made, therefore, to supply this service with the help of experienced personnel. The

TABLE 57

ESTIMATED MANUFACTURING COST OF VINYL CHLORIDE FROM ETHYLENE

Plant Capacity: 11 million lb of vinyl chloride per year
Operation: 330 days per year, 3 eight-hour shifts per day
Investment: ID 615,000

ITEM	UNITS	ID PER UNIT	UNITS PER POUND	COST (FILS PER POUND)
Raw Materials				
Ethylene	Pounds	0.0185	0.49	9.06
Chlorine	Pounds	0.0137	1.25	17.12
Other Chemicals	-	-	-	1.40
				27.58
Utilities				
Electricity	KWH	0.002	0.0186	0.04
Cooling Water	1000 gal	0.007	0.0215	0.15
Fuel	10^6 Btu	0.008	0.0024	0.02
Steam	1000 lb	0.270	0.0021	0.56
				0.77
Operating Labor	Man-hr	0.125	0.0045	0.56
Supervision				
50% of Operating Labor	-	-	-	0.28
Labor Overhead				
25% of Labor and Supervision	-	-	-	0.21
Factory Overhead				
50% of Labor and Supervision	-	-	-	0.42
Maintenance				
4% of Investment	-	-	-	2.24
Depreciation				
10% of Investment	-	-	-	5.60
Miscellaneous				
2% of Investment	-	-	-	1.12
TOTAL COST OF PRODUCTION[1]				38.78

1. Interest on Total Capital included in polyvinyl chloride Costs, and credit for hydrogen chloride not included.

TABLE 58

ESTIMATED MANUFACTURING COST OF POLYVINYL CHLORIDE FROM VINYL CHLORIDE

Plant Capacity: 10 million lb of polyvinyl chloride per year
Operation: 330 days per year, 3 eight-hour shifts per day
Investment: ID 350,000

ITEM	UNITS	ID PER UNIT	UNITS PER POUND	COST (FILS PER POUND)
Raw Materials				
Vinyl Chloride Monomer	Pounds	0.0388	1.11	43.07
Chemicals	-	-	-	3.60
				46.67
Utilities				
Electricity	KWH	0.002	0.22	0.44
Cooling Water (makeup)	1000 gal	0.007	0.002	0.01
Process Water	1000 gal	0.038	0.001	0.04
Steam	1000 lb	0.270	0.002	0.54
				1.03
Packing and Other Direct Supplies	-	-	-	1.52
Operating Labor	Man-hr	0.125	0.0035	0.44
Packaging and Shipping Labor	Man-hr	0.062	0.0011	0.07
Supervision				
50% of Labor	-	-	-	0.25
Labor Overhead				
25% of Labor and Supervision	-	-	-	0.19
Factory Overhead				
50% of Labor and Supervision	-	-	-	0.38
Maintenance				
4% of Investment	-	-	-	1.40
Depreciation				
10% of Investment	-	-	-	3.50
Other Costs				
2% of Investment	-	-	-	0.70
				56.15
Interest				
4% of Total Capital (ID 1,215,000)	-	-	-	4.86
TOTAL PRODUCTION COST				61.01

sales and administration costs that have been allowed in the estimates have been made high (10% of sales value) to allow for this.

(4) Resin Type. During planning for the establishment of a polyvinyl chloride plant, it would be necessary to determine the type or types of polyvinyl chloride to be produced. Although the general-purpose grade accounts for 60% of total world production, the increasing demands for other grades may indicate at the time of establishment that another grade should be produced.

(5) Plant Location. The plant would have to be located near the caustic soda and chlorine plant and the ethylene plant, to avoid heavy transport costs. As these plants will have to be built in the Basra region and a substantial part of the output would be exported, an alternative location cannot be considered.

g. Priority

The polyvinyl chloride plant should begin operation at the same time as a caustic soda and chlorine plant and no sooner than and preferably after, an ethylene-polyethylene operation has begun. Careful timing and coordination will be necessary at the planning stage.

TABLE 59

ESTIMATED PROFIT FROM INTEGRATED VINYL CHLORIDE AND POLYVINYL CHLORIDE PLANT

Plant Capacity:	10 million lb of polyvinyl chloride per year
Plant Investment:	ID 965,000
Working Capital:	ID 214,000
Startup Capital:	ID 36,000
Total Capital:	ID 1,215,000

		ID
Annual Sales Income		
10 million lb of polyvinyl chloride at 90 fils per pound		900,000
Costs of Manufacture and Sales		
Production cost of 10 million lb at 61 fils per pound	610,000	
Sales and administration at 10% of sales	90,000	700,000
Gross Profit		200,000
Return on Total Capital		16.5%

H. GLASS MANUFACTURE

1. Introduction

An investigation has been conducted into the economic feasibility of establishing a glass plant in Iraq. All the glass products - carboys and bottles, flat glass, and other glassware - at present consumed in Iraq are imported. The economic feasibility of producing each of these types of glass has been considered, but this report is principally concerned with the manufacture of glass bottles, as this offers the most promising possibility of economic success. It is not possible to produce flat glass economically in quantities that could be absorbed in Iraq at the present time, and it is considered that manufacture of any of the large number of items contained in the other glassware group should not be attempted until experience has been gained in the problems of making glass bottles.

2. Recommendations

1. Further study of bottle glass manufacture in Iraq should be deferred for two or three years, and flat glass manufacture should not be considered until demand is at least three or four times greater than it is at present.
2. The Geological Department of the Ministry of Economics should be informed that there is no immediate intention to establish a glass industry in Iraq and that its search for suitable glass sand should be given a low priority. It should not, however, be discontinued, as further consideration may be necessary in two or three years.

3. Present and Potential Markets

Iraq's imports of glass and glass products have shown a steady increase over the past five years. Imports which in 1950 totalled 2807 metric tons of all kinds of glass, valued at ID 185,426, increased to 8319 metric tons, valued at ID 585,162 by 1954.

Imports fall into three principal categories: carboys and bottles; flat glass unworked; and ''other glass and glassware.'' Of the total 1954 imports, these three categories represented 89% of the tonnage and 72% of the value. The remainder of the imports consisted of such things as mirrors, safety glass for automobiles, glass tile, thermos flasks, special laboratory glassware, glass beads, and glass bulbs for electric lamps. Table 60 shows the imports for 1950 through 1954 for these three principal categories.

In this report, these three major categories only will be considered in evaluating the potential market in Iraq for glass and glass products. Other categories are small and represent, for the most part, specialty items with which a new glass industry should not be concerned because of the small individual markets.

TABLE 60

IMPORTS OF THREE PRINCIPAL CATEGORIES OF GLASS PRODUCTS

	FLAT GLASS UNWORKED		CARBOYS AND BOTTLES		OTHER GLASS AND GLASSWARE	
YEAR	METRIC TONS	VALUE (ID)	METRIC TONS	VALUE (ID)	METRIC TONS	VALUE (ID)
1950	1,005	51,060	999	27,659	526	61,596
1951	1,814	76,347	1,475	45,395	1,644	220,241
1952	1,321	67,237	2,075	87,099	1,163	148,762
1953	2,114	78,303	1,778	58,219	1,132	136,112
1954	3,380	114,109	1,756	63,741	2,243	239,641

Source: Customs and Excise Department, Government of Iraq.

a. Carboys and Bottles

Imports of carboys and bottles have increased during the past five years, although the rate of increase has not been as great as for flat glass. One of the principal reasons for the growth that has taken place has been the establishment of a number of soft-drink plants. The requirements for bottles by the soft-drink industry should continue to grow in the next five years. The rate of growth of the bottle requirements will not be in direct proportion to future growth of the industry, since a large portion of anticipated bottle requirements has already been ordered from abroad and will satisfy much of the industry's needs for the next few years. Nevertheless, it is estimated that bottle requirements of the soft-drink industry will be about 75% higher by 1960 than they were in 1954.

Other large current users of bottles include the brewery and distilling industries, but the bottles used by the brewery industry are a

specialty item, since they are made from colored glass. There will be a growing demand in the future for bottles to serve as milk containers. A dairy, jointly operated by UNICEF and the Iraq Government, will commence operation in the near future to produce 100,000 liters of milk per day. This will be the beginning of a dairy industry that may ultimately require a large and increasing number of bottles. Another potential use for bottles and jars will be as containers for food, but this demand will come into being only with further development of the agricultural industry and cannot be predicted at this time.

It is estimated that total tonnage of bottle glass will reach 2500 to 3000 metric tons per year by 1960. One of the difficulties in a bottle glass plant is the variety of bottle types that must be produced under current market conditions. The greater the number of shapes and sizes, the greater the production cost, and Iraq is in a poor position in this respect. The two really large bottle consumers represent only about 20% of the total capacity of a 3000-ton plant, which is considered to be the minimum-sized economical plant for Iraq. The rest of the capacity would be devoted to small numbers of a large variety of bottles.

b. Flat Glass

Imports of flat glass have approximately tripled in the period 1950 through 1954. Increased use of flat glass will probably continue, particularly with the marked increase in building contruction foreseen by 1960. As indicated in the building materials section of this report, the rate of new and rebuilt houses will probably increase rapidly during the next five years. It has been assumed that private and Government-sponsored building will reach a rate of 22,000 per year by 1960, and that houses built as part of the Government program will use only one half as much glass as the privately contructed houses, because of their smaller size. On this basis, total use of window glass by 1960 would be 110% above the current rate of use. Assuming also that other uses of flat glass, for replacements, stores, public buildings, etc., continue to increase at more or less the same rate, flat-glass usage by 1960 should reach about 7000 tons per year.

c. Other Glass and Glassware

In this category of glass products are such items as drinking glasses, oriental tea cups (isticans), ash trays, and lantern chimneys. Imports of these items in 1954 were four times the imports in 1950. Two of the largest items are oriental tea cups and drinking glasses, and these items will probably increase in demand with a rising standard of living. Breakage is quite high, necessitating frequent replacement. It is estimated that demand for items in this general category will increase by 1960 to 3000 to 4000 tons per year.

In summary, the market for glass and glass products, which has risen from 2800 metric tons in 1950 to 8300 tons in 1954, should increase to a total

of 14,500 to 16,000 metric tons by 1960. This total would be divided about as follows:

	METRIC TONS
Flat Glass	7,000
Bottles, Jars, etc.	2,500 to 3,000
Other Glassware	3,000 to 4,000
Specialty Items	2,000

4. Resources

The principal raw materials for the manufacture of container glass and window glass are sand, soda ash, and lime. Other raw materials used are cullet (broken glass obtained from previous manufacture or from an outside source), sodium sulfate, nepheline syenite (or feldspar and fluorspar), barium sulfate, arsenic, and decolorizers. These latter ingredients serve as oxidizing and fining agents and help to control the properties of the finished glass. The availability of the necessary raw materials in Iraq is discussed below.

a. Sand.

Some work has been done in the past by consultants hired by the Industrial Bank and by the Development Board to evaluate the suitability of Iraq's sands for glass manufacture, but the work to date has been of a preliminary nature. Further work must be done to determine the homogeneity of the most promising sand deposits and the extent of the reserves, before plans could proceed for the establishment of a glass industry in Iraq.

The most promising deposits of glass-quality sand appear to be located at Fetha, near Najaf; at Khan Musalla, just north of Najaf; at Wadi Amij, 150 kilometers west of Ramadi; and in the vicinity of Rutba. The locations in the vicinity of Najaf would be the most suitable from the point of view of plant location, since Najaf is close to large limestone deposits and is relatively close to Baghdad and Basra. The deposits at Wadi Amij and Rutba, however, are far from Baghdad, in an isolated area without rail transportation facilities.

Surveys should be made to determine the homogeneity of the sand deposits and the extent of the deposits at Fetha. A large number of representative samples should be obtained and analyzed, and arrangements should be made to have glass samples made from the samples of sand. If work at Fetha indicates that the quality, homogeneity, or reserves are inadequate for a glass industry, work should then proceed on the sands at Khan Musalla. Work on the Wadi Amij and Rutba deposits should not take place unless suitable glass-sand deposits cannot be located in the Najaf area.

b. Limestone

The second principal ingredient required in the manufacture of glass is limestone. Discussions with the Geological Department indicate that there

should be no difficulty in finding a suitable and adequate supply of limestone. One of the most promising reserves of limestone is located near Qal' at Mazlum, 15 kilometers south of Najaf, where it has been estimated that possibly 4 million metric tons of rock might be present. This location would be very convenient for a glass plant using Najaf-area sand. Further work appears necessary to ascertain the homogeneity of this deposit as well as to determine its extent. It is recommended that additional funds be provided for this purpose.

c. Soda Ash

Quantities of soda ash (620 tons per year for a 3000-ton-per-year bottle glass plant) would have to be imported, as is currently the case for soda ash required for other uses. The minimum economical size of a plant to produce soda ash is too large for Iraq's requirements. (See discussion in the report section on caustic soda.) Importation of the required soda ash should present no problem.

d. Miscellaneous Raw Materials

The other raw materials required for glass manufacture, with the exception of cullet, are currently unavailable in Iraq and will not be available for some time in the future. These raw materials are required in small quantities and can be imported.

e. Cullet

Cullet is broken glass obtained from previous melts of glass or from outside sources. Obtaining cullet should present no particular problem, since when insufficient broken glass is available from outside sources, the plant can supply its own cullet by using imperfect glass and glass containers broken in the plant.

f. Labor

Total employment in a bottle glass plant to produce 3000 metric tons per year is estimated to be 135 to 150 persons. Until such time as Iraqi personnel have been trained to operate a plant and to service the complex equipment, it would be necessary to employ technical personnel from other countries. These technical personnel would be required to train a maintenance force to a relatively high degree of skill, as well as to train workers in operating procedures. Allowances for these foreign technical personnel have been made in cost estimates prepared.

g. Power

The power requirements for a glass plant are high. A 3000-ton-per-year plant requires about 3200 kilowatthours per day, which represents a demand of about 200 - 250 kilowatt generating capacity. It would be necessary,

in drawing up specifications, to examine the power situation at the selected location of the glass plant. If enough power were not available, it would be necessary to build generating facilities with the glass plant, at a cost of about ID 10,000 to 15,000.

5. Manufacture of Glass

As the manufacture of flat glass in Iraq is not economical and probably will not become so for some years, a description of the manufacturing process is not presented in this report. However, as bottle glass manufacture will probably be economically feasible in a few years, a description of bottle glass manufacture is presented below.

A flow sheet of the basic glass bottle manufacturing process is shown diagrammatically in Figure IV. The basic type of glass used in modern bottle manufacture is soda-lime-silica glass. Principal raw materials are sand, lime, and soda ash. In addition to these raw materials, the mixture for glass manufacture contains cullet, in amounts of 14% to 16% of the mix, and one or more of the following materials: oxidizing agents, decolorizing agents, coloring agents, and fining agents, which aid in freeing the fused glass of undissolved glass. The ingredients listed above are thoroughly mixed, accurately proportioned in the ''batch plant,'' and then delivered to a ''batch charger.''

The ''batch charger'' is used to deliver the batch at a controlled rate to the melting portion of a furnace. The glass, after melting and after being freed of bubbles in the ''fining section '' of the furnace, flows into the unfired section for cooling and conditioning prior to forming into specific shapes.

The feeding of charges of molten glass to forming machines was formerly a hand operation, but is now invariably done automatically. The feeding cycle is timed to the speed of the forming machine and is adjustable in phase. The speed is adjustable over a wide range. Forming of glass may be accomplished either by pressing it between metal mold parts or by blowing a bubble of glass within a confining mold. Blowing, which nearly always requires some pressing at the start, is used for making bottles, jugs, and jars. A combination of pressing and blowing is used generally for making ware such as jars, in which the opening is wide in relation to the diameter. The process of forming glass consists of shaping it by pressing or blowing, or a combination of the two, while at the same time extracting heat to increase the viscosity of the glass until the formed shape is set and self-supporting. This process is usually completed in a very few seconds.

From the forming machine, ware is carried on a continuous belt conveyor to the annealing oven or lehr. The transfer from the conveyor to the belt of the lehr is usually automatic, although, in rare instances, hand transfer is used. The lehr is a continuous oven designed to cool the glass slowly to practical rigidity, and then to further cool it more rapidly so that it can be handled comfortably for inspection. As the glassware emerges from the lehr, it is examined for imperfections. Ware passing inspection is packed in cartons;

rejected ware is returned to the ''batch plant,'' to be used as cullet in later glass melts.

FIGURE IV.

FLOW SHEET OF BOTTLE MANUFACTURING

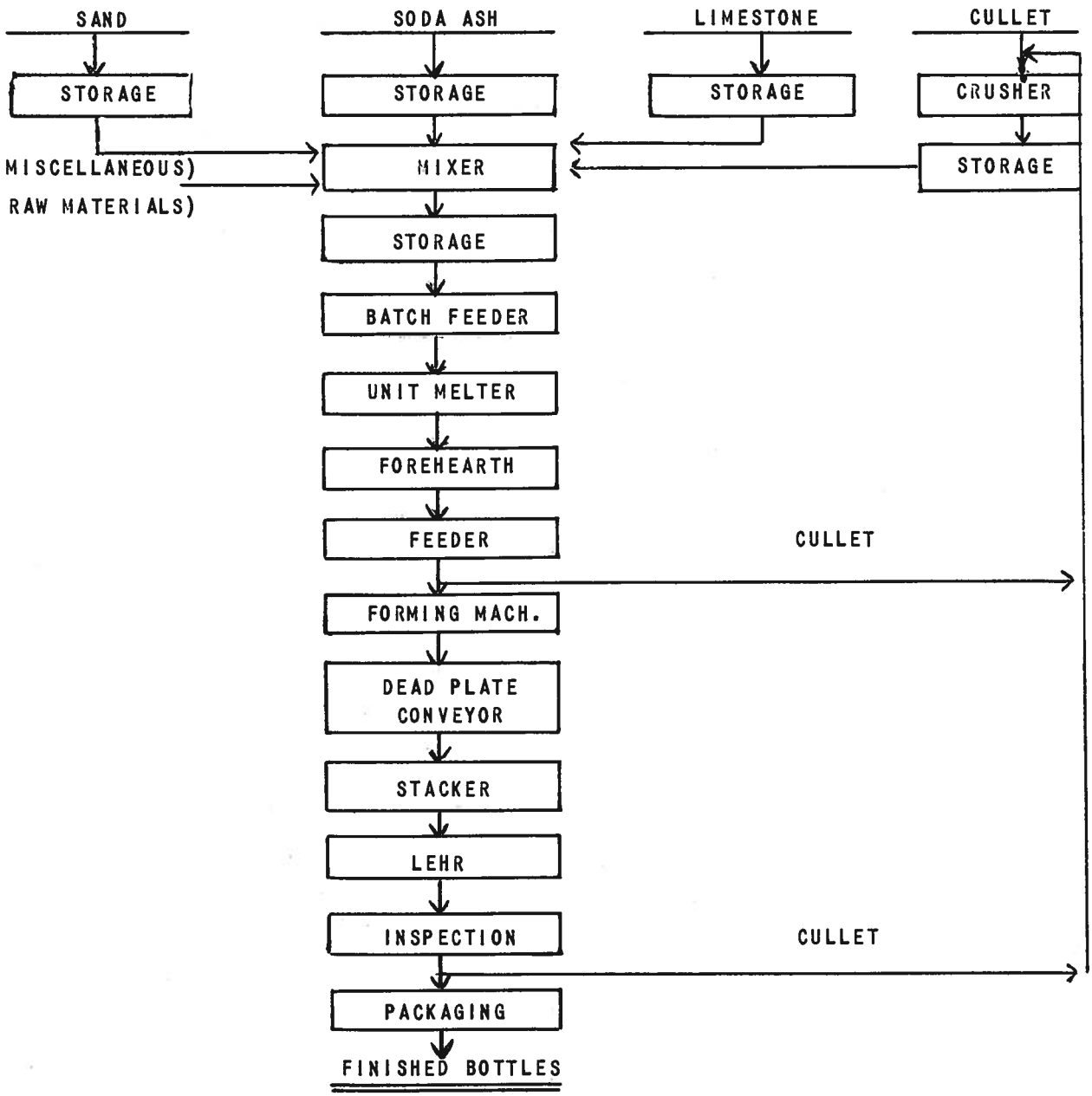

6. Costs and Investment

a. Bottle Glass

Estimates have been prepared for the cost of producing bottle glass in Iraq in a plant having a capacity of 3000 metric tons per year. A plant of this size corresponds to the estimated 1960 market for bottle glass in Iraq.

The estimates detailed in Tables 61 and 62 are based on U. S. practices and costs, and must be considered as order-of-magnitude. They indicate that a total capital of about ID 218,000 would be required, of which ID 170,000 (see Table 61) would be as permanent investment, and ID 48,000 would be as working capital. Estimates of labor requirements have been based on U. S. practice, but they have been adjusted to allow for the different conditions prevailing in Iraq. In addition, working-capital requirements, and costs for cartons and closures have been based on U. S. practice, and may therefore require further adjustment for Iraq conditions.

The estimated production costs detailed in Table 62 are based on long continuous runs of only two or three types of bottles, and mold costs are also based on this assumption. However, the small numbers of a large variety of bottle types required in Iraq would necessitate a much larger number of molds and their frequent change. The two types of soft-drink bottles for which there is the largest demand in Iraq (Pepsi-Cola and Coca-Cola bottles) represent only 20% of the total tonnage of bottle glass demand. The rest of the tonnage would consist of short production runs, with attendant increased production cost. The mold changes required would absorb a large amoung of nonproductive time, thus increasing the costs above those indicated in the estimates.

Based on the estimates prepared and detailed in Table 62, it is estimated that bottle glass could be produced in Iraq for ID 61 per metric ton. This production cost makes no allowance for operating profit nor for changes in investment figures to allow for erection in Iraq, but does include allowances for cartons and closures and interest on capital. The price of bottles landed in Iraq varies from ID 50 to ID 100 per metric ton, as bottles can be supplied at a relatively low price to Iraq by countries whose glass industries depend upon such low-price exports for economical production of their domestic requirements.

The production cost quoted above is based on the use of automatic bottle-making equipment. Some operations, namely, batch mixing, batch charging, and bottle transfer, could be done manually, but a reduction in investment of only about 5% would result, and this would reduce the operating cost by only ID 0.680 per metric ton. The use of automatic bottle-making equipment has resulted in high-quality, uniform bottles and allows countries with high labor rates to produce bottles as cheaply as, or more cheaply than, countries producing by old, manual methods. But to do this requires long, continuous production runs of one type of bottle.

Although it is possible to produce bottles at reasonable cost in Iraq, the absence of a market for long runs and the ability of other countries to export at a very low price prevent it from offering an attractive industrial opportunity for immediate adoption.

TABLE 61

ESTIMATED PLANT INVESTMENT:
BOTTLE-MANUFACTURING PROCESS

Capacity: 3000 metric tons per year

ITEM	INSTALLED COST (ID)
A. Unit Melter and Equipment	
Raw Material Storage, Mixing Plant, Batch Storage	25,000
Unit Melter, Including Batch Feeder and Auxiliaries	19,000
Forehearth, Feeder, Forming Machines, Stackers, Conveyors, Lehrs	32,500
Auxiliary Equipment (for forehearth, mold shop, laboratory, carton-making equipment, warehouse equipment, etc.)	16,500
TOTAL INSTALLED EQUIPMENT COST	93,000
B. Buildings and Auxiliaries	
Buildings	43,500
Utility Equipment	10,000
Railroad Siding, Site Improvement	7,500
TOTAL PHYSICAL COST	154,000
Engineering and Contingency at 10% of Total Physical Cost	15,400
TOTAL PLANT INVESTMENT	169,400 (say ID 170,000)

TABLE 62

ESTIMATED MANUFACTURING COST OF BOTTLE GLASS

Plant Capacity: 3000 metric tons per year
Operation: 300 days per year, 3 eight-hour shifts per day
Investment: ID 170,000

ITEM	UNITS	ID PER UNIT	UNITS PER TON	COST (ID PER TON)
Raw Materials				
Sand	Metric tons	2.750	0.588	1.620
Soda Ash	Metric tons	23.000	0.206	4.740
Dolomitic Lime	Metric tons	1.900	0.161	0.306
Nepheline Syenite	Metric tons	21.000	0.044	0.925
Cullet	Metric tons	3.950	0.1675	0.662
Miscellaneous	-		-	0.360
				8.613
Utilities				
Power	Kwh	0.002	322	0.644
Light Fuel Oil	10^6 Btu	0.051	2.4	0.122
Bunker "C" Oil	10^6 Btu	0.035	16.25	0.569
Water	1000 gal	0.038	5.18	0.197
				1.532
Operating Labor				
Skilled	Man-hr	0.125	50	6.250
Unskilled	Man-hr	0.031	50	1.550
				7.800
Operating Supervision				
50% of Operating Labor				3.900
Maintenance Labor				
Skilled	Man-hr	0.125	15	1.875
Unskilled	Man-hr	0.031	15	0.465
				2.340
Maintenance Supervision				
75% of Maintenance Labor				1.755
Maintenance Supplies				
100% of Maintenance Labor				2.340
Overhead				
75% of Total Labor and Supervision				11.847

TABLE 62 (Continued)

ESTIMATED MANUFACTURING COST OF BOTTLE GLASS

ITEM	UNITS	ID PER UNIT	UNITS PER TON	COST (ID PER TON)
Depreciation				
7% of Investment				3.960
Mold Cost				0.950
Miscellaneous Expenses				
3% of Investment				1.700
TOTAL OPERATING COST				46.737
Cartons, Closures				
25% of Operating Cost				11.684
				58.421
Interest				
4% of Total Capital (ID 218,000)				2.910
TOTAL PRODUCTION COST				61.331

b. Flat Glass

Estimates have not been prepared for the establishment of a plant to produce flat glass. Detailed cost information on flat-glass manufacture is difficult to obtain since flat-glass manufacturers guard this information very closely, but general cost information available indicates that the minimum size plant in the United States to produce flat glass economically would be about 24,000 tons per year. Even assuming that an economical size plant in Iraq would be substantially smaller, Iraq's present demand of 3400 tons and its 1960 estimated demand of 7000 tons would still be too small to justify domestic production. Attempts to produce flat glass by other than automatic mechanical means would result in expensive, poor-quality glass, and this procedure is not recommended. Future and unexpected demands for flat glass may be such that further investigation of flat-glass manufacture in Iraq will be warranted, but investigation should be deferred until that time.

Consideration has been given to the establishment of an integrated plant to manufacture both bottle and flat glass, since in some cases this has been done. Investigation disclosed, however, that the bottle glass produced in such a plant is green, because raw material requirements are somewhat different for flat glass than for bottle glass. Since production of a green bottle glass would make it impossible to meet the specifications of the largest present and potential bottle consumers, it is recommended that an integrated plant not be considered.

7. Priority

Further consideration of a glass plant in Iraq should be deferred for two or three years, when another study of the market situation should be made. Reasons for deferring this project are summarized below:

1. The market indicated for flat glass is not sufficient to ensure economical operation.
2. The wide variety of bottles and jars that would have to be produced in short runs would severely reduce the prospects of profitable bottle glass manufacture.
3. Other projects, of greater benefit to the Iraq economy and showing a better return on resources invested, are available. Such projects make glass manufacture less attractive at this time.
4. In two or three years, the demand for milk bottles may have increased substantially, and this new and important development may greatly improve the prospects of economical glass bottle production.

Nevertheless, work should proceed to prove a reserve of suitable glass-sand and limestone, although the geological work need not have a high priority. In any case, a survey of limestone deposits will be required for other purposes, particularly for the building-materials industry.

As a comparatively small investment is involved, it is likely that private interests will take up this opportunity when it becomes apparent that

good chances of economic success exist. In the meantime, the Board should indicate to the Industrial Bank that funds will not be made available for glass manufacture in Iraq for some years to come.

I. PHARMACEUTICALS

1. Introduction

An investigation of the feasibility of manufacturing pharmaceuticals in Iraq indicates that this should be made the subject of a more detailed survey, since inadequate information is currently available. The lack of domestically manufactured raw materials and containers will require that these be imported. Because pharmaceuticals are so important to health, a thorough study of the economics of production as well as of the legislation required to protect the consumer from improperly manufactured or dispensed drugs should be made before the industry is established in Iraq.

This report, therefore, indicates the type of further information required and the special problems that would face a domestic pharmaceutical industry. Although further study should be made, its priority should not be high, since Iraq's pharmaceutical requirements are well supplied at present by a large number of foreign manufacturers, who supply a wide variety of pharmaceuticals at reasonable prices.

2. Markets for Pharmaceuticals

Iraq's imports of pharmaceuticals of all kinds have increased steadily but slowly during the past five years, rising from a total value of ID 757,775 in 1950 to ID 1,334,732 in 1954. The most significant increase occurred in 1951, when the value of pharmaceuticals imported rose to 50% over that imported in 1950. Since that time, the increase has been less, averaging about 6% per year. The total value of pharmaceuticals imported does not, however, completely describe the market situation, as the increased competition from foreign manufacturers has, no doubt, resulted in lower prices and larger imports for the same value.

Total imports are made up of a large assortment of pharmaceutical preparations. About 40% of the imports can be classified as antibiotics, 40% as patent medicines, 10% as sulfa drugs, and 10% as chemicals. With the increase of public-health measures and education and a rise in living standards, the use of pharmaceuticals will undoubtedly increase, but it is difficult at this time to forecast the extent of this growth. Antibiotics will probably show the greatest increase in the near future.

3. Resources

The manufacture of pharmaceuticals depends largely upon a ready supply of numerous complex chemical compounds. Based on information supplied by importers of the types of pharmaceuticals imported, it is estimated that about 800 to 1000 chemicals are represented, some of which are used in more than

one preparation. It will be many years before Iraq will be in a position to supply even a few of these, and they would have to be imported if pharmaceutical manufacture were undertaken.

4. Pharmaceutical Manufacture

The manufacturing methods used to produce pharmaceuticals will, of course, vary with the type produced. Some methods are relatively simple while others require a great amount of technical knowledge together with a close control of processing conditions. The broad range of pharmaceutical production covers such simple operations as sterile-ampule filling, tube-filling, and various simple blending processes and the more complex manufacturing techniques required to produce antibiotics and sulfa drugs. Because of the lack of domestically produced chemicals required for pharmaceuticals production, three approaches are possible.

a. Importation of Basic Pharmaceutical Ingredients in Bulk

This method would involve importing the basic ingredients required for the manufacture of pharmaceuticals and performing the actual preparation of pharmaceuticals in Iraq. This method requires more technical knowledge than the packaging of bulk pharmaceuticals, but would permit more value to be added to the products in Iraq. Importation of containers would be required until such time as they can be produced domestically.

b. Importation of Pharmaceuticals in Bulk

This would involve importing pharmaceuticals in bulk and packaging them in Iraq for distribution. Such an operation would require the use of tableting machines, sterile-ampule filling equipment, bottle- and tube-filling equipment, etc. Since the jars, bottles, and other containers required are not available in Iraq, these, too, would have to be imported. As a result, little value would be added to the product in Iraq and little, if any, savings would result.

c. Importation of Finished Pharmaceuticals

This method, currently employed by Iraq, does not permit the addition of any value to the products. It does, on the other hand, offer a selection of a wide range of pharmaceuticals at competitive prices and gives Iraq the benefit of lower costs resulting from large-scale production in foreign countries.

The first method offers chances of success in the future but a very careful evaluation should first be made. The information available on the types of pharmaceuticals currently imported is limited, but it is known that a wide variety is imported. A careful analysis will have to be made of the types most in demand in Iraq, the ingredients required, the resultant production cost, and the return on investment. The technique of production must be

available and it must be certain that pharmaceuticals of the required purity, potency, uniformity, and cost can be produced, before action is taken.

Of the three methods outlined above, it is felt that the second method should not receive consideration at all at this time. The value that can be added is small and the preparation of relatively small quantities, together with the use of imported containers, may well result in a higher price for the products.

5. Costs and Investment

The costs of pharmaceutical manufacture will depend on the types of products produced. The equipment required for manufacture is relatively inexpensive when compared with the cost of the building. The need for sterile areas and air-conditioning would account for a large proportion of the cost of establishment. A plant to produce a relatively complete line of pharmaceuticals in Iraq would probably require an investment in the range of ID 200,000 to ID 300,000. Production costs would depend on the quantity and diversity of output and the cost of imported materials.

6. Special Problems and Considerations

1. Foreign competition in Iraq has resulted in very low prices. The principal manufacturers of many countries sell pharmaceuticals in Iraq today, and a broad line is readily available. In order to compete, a domestic industry would have to supply high-quality pharmaceuticals at low prices.
2. It is essential that pharmaceutical products be of very high quality immediately manufacture begins. Poor-quality products might be fatal both to the industry's future and to its consumers. Very careful evaluation should therefore be made before domestic manufacture is undertaken. Tariff and other limitation of imports should not take place except perhaps in the case of certain patent medicines, as they would constitute a tax on the health of the people.
3. Careful regulations covering manufacturing conditions, product purity, distribution, and personnel qualification must be drawn up and the necessary legislation for their enforcement enacted before manufacture begins. Without such action, poor-quality drugs and/or misapplication would inevitably result. Advice on these matters could be obtained from governments and professional pharmaceutical societies in a number of countries.
4. The preference of the local population for imported goods, commented on elsewhere in this report, is likely to be particularly strong in this field.

Because of the need for a high degree of technical knowledge in pharmaceutical manufacture, it is recommended that if in the future it is decided to establish this industry, it be accomplished in one of two ways: A large, well-known pharmaceutical manufacturer should be asked to establish a subsidiary company or branch plant in Iraq, or a license agreement should be arranged with such a manufacturer. Either method would permit the production of well-known brands, with the advantage of proven methods, adequate controls,

technical skills, and continuing research. A proper evaluation of the economic feasibility of establishing an industry based upon the importation of pharmaceuticals ingredients in bulk should include the following:

1. Reports from the Ministry of Health and other medical sources in Iraq should be obtained in order to classify the types and the incidence of common diseases in Iraq.
2. The various types of medications required for the treatment of each of the diseases disclosed by the survey should be determined from public-health officials and other medical sources.
3. The market potential for each product, based upon both of the above points, should be established. In this work, import figures should be used to complement and to confirm the market information developed.
4. The basic drugs and/or chemical ingredients required for the formulation of the most promising products, from a market standpoint, should then be determined.
5. The approximate amounts of basic drugs and/or chemicals required for these products should then be calculated, as should their total imported costs. The possibility of obtaining certain of these ingredients within Iraq should also be examined.
6. Analysis of physical requirements needed to produce the most promising pharmaceuticals should then be made, and schedules showing the approximate investment cost required drawn up.
7. The cost of producing selected finished products should then be compared with their imported cost. Such a comparison, carried out for those pharmaceuticals for which market analyses have indicated a favorable growth pattern, should establish the economic feasibility of various pharmaceutical plants for Iraq.

7. Recommendations

1. The feasibility of establishing an industry to manufacture pharmaceuticals in Iraq, using imported raw materials, should be made a subject of further investigation in two or three years. Careful evaluation is necessary to be certain that high-quality, low-cost drugs can be produced to compete with those currently imported.
2. A careful study should be made of the regulations required to control manufacturing standards, distribution methods, product purity, etc., and the necessary legislation enacted <u>before</u> any pharmaceutical operation is established.
3. Pharmaceuticals should be manufactured in Iraq by either a subsidiary company or branch plant of a reputable foreign manufacturer, or under a license agreement with such a company. This method would provide technical skills, brand names and the benefits of research by the parent company.
4. Funds should not be made available by the Development Board for the establishment of a pharmaceutical industry in Iraq until a thorough evaluation has been made to ensure that production can result in high-quality, low-cost products, and until necessary protective legislation has been enacted.

II. BUILDING MATERIALS AND CONSTRUCTION

A. INTRODUCTION

In all countries, construction and its attendant material industries form an important section of the national economy and provide a substantial proportion of the industrial employment. Iraq's rapid economic development has reinforced this natural tendency: Building, directly or indirectly, provides employment for at least 25% of Baghdad's industrially occupied population, and a somewhat smaller, but still very significant percentage of the working population in Iraq's other major cities. Many potential industrial opportunities in Iraq are severely restricted because of the limited domestic market, but this restriction does not exist in the building industry. The present market is almost unlimited, because of the great need for improving the housing conditions of the people. In this case the restriction is upon the ability of manufacturers to produce enough building materials of good quality at a reasonable price. Another limitation upon some of the other potential opportunities is that they must, in order to be profitable, be operated as single, large-scale units, with a very heavy initial capital investment. The typical production unit in the building-material industry, on the other hand, is of medium or small size; and although many may be required, they may be located in many parts of the country. Thus, the building industry is free from two of the most serious obstacles to industrial growth in economically underdeveloped countries: limited domestic markets and heavy initial capital investments. As is to be expected, it has already grown to a position of considerable importance.

Industrial expansion, which usually results in a higher standard of living for the population as a whole, carries with it an additional demand for more and better housing. This demand, coupled with a scarcity of building materials, results in inflated prices and may limit or restrict construction to more expensive residential houses and public buildings. This danger must be guarded against in Iraq. Nevertheless, the building-materials industry does offer the Development Board an important opportunity for industrial development and improvement while at the same time providing adequate quantities of low-cost building materials to support an expanded building program. In this way employment can be created for many thousands of workers and greatly improved living standards provided for the people of Iraq.

The rapid growth of the construction industry has already placed severe demands upon the present building-materials industry, demands which, in many cases, far exceed supply. In addition to a rising rate of private construction, a large-scale Government housing program is being planned. The needs of this program, superimposed upon the growing private demand, will create a critical shortage in building materials. In fact, the shortage of some materials is already being felt, although the Government housing program is not yet in effect. This shortage must be alleviated if badly needed

construction is to be begun and completed on schedule. Further, at this time both improved and new materials can be introduced at great benefit to the building-materials and the construction industries. Such new materials, described below, would not only represent more economical use of Iraqi resources, but would provide the basis for improved construction as well.

B. MARKET DEVELOPMENT AND MATERIALS REQUIREMENTS

It is estimated that 8000 new and reconditioned houses a year are now being built in Iraq. These are in the medium- to large-size category and are, for the most part, privately financed. There is evidence that construction is severely limited by a shortage of materials. An examination of recent trends, coupled with extensive interviewing of local contractors and building planners, indicates that this total will rise to 12,000 by 1960 and will require at least a 50% increase in building-materials production. Provision of additional production capacity, therefore, is vitally important.

It is possible to calculate the additional capacity needed, both in terms of new plants and amounts of material, based on the above estimate. It should, however, be emphasized that the following calculations assume that only the present type of building materials will be used. The expansion shown, therefore, is simply an indication of the possible magnitude of growth of the building-materials industry, as it is anticipated that not only will new types of materials be used but that plant improvements will add substantially to the capacity of existing factories. It is proposed to show first the total needs by 1960 in terms of present types of materials and plants that produce them, and then, in subsequent sections dealing separately with the various building materials, to indicate how establishment of factories for the manufacture of new materials as well as improvements in present plants and methods can provide alternate ways of meeting these needs. Detailed calculations are included in the Appendix. Building-materials production capacity required, over and above present capacity, based on the present rate of growth of house construction and based on the use of present types of materials, is:

1. 40 new brick factories.[1] A total of 12,000 houses, at an average of 75,000 bricks per house, would require the output of 40 additional brick plants of the same average capacity as Iraq's present 80 factories (7.5 million bricks per year).
2. 72 new juss plants. At an average of 90 tons per house, 12,000 houses would require the output of 72 plants of the same average capacity (25 tons per day for 200 days per year) as the existing 150 factories.
3. 10,000 tons of steel per year. 12,000 new houses at an average of 2.5 tons of steel ''I'' beams per house would require an additional 10,000 tons of

[1] According to the 1954 Industrial Census of Iraq there are altogether 203 brick plants in Iraq. The greater part of these, however, are of very small size and only 80 are considered to be economically significant.

steel per year over and above present usage. Provision of this material is discussed in a separate report section dealing with steel-plant construction in Iraq.

4. 76,000 tons of cement per year, based upon an estimated 19 tons of cement per house. This increase in cement requirements is less than the capacity of one cement kiln (350 tons per day for 300 days per year) and is discussed below in relation to Iraq's total projected cement capacity.
5. 300,000 cubic meters of gravel and 160,000 cubic meters of sand per year, based upon 75 and 40 cubic meters per house, respectively. These materials are used as aggregate with cement to form concrete, and are considered in detail below.

It is understood that the Development Board, the Ministry of Social Affairs, the Mortgage Bank, and other Government agencies are formulating plans to build large numbers of small and medium-size houses during the next few years for workers in lower-income groups. The social benefits of such improved housing will be far-reaching, but the industrial implications will also be very important. A large number of new plants for the production of building materials will be needed, in addition to improvements and extensions in existing factories. Estimated needs for additional housing of this type have been variously stated to range from 5000 to 20,000 units per year. As a basis for the following estimates it has been arbitrarily assumed that the rehousing program will reach 10,000 units per year by 1960. These, of course, will be in addition to private construction of 12,000. These somewhat smaller houses have further been assumed to require 40,000 bricks each, and other materials requirements have been scaled down accordingly. Again, estimates are based upon continued use of present types of materials and are offered only to indicate the magnitude of industry expansion required to meet the needs of a substantial rehousing program. Should planning on a larger or smaller scale take place, estimates can be readily revised. Additional requirements for a 10,000-unit-per-year rehousing program by 1960 are:

1. 53 additional brick factories. 10,000 houses at 40,000 bricks per house would require the output of 53 additional plants of the same average size as present units (7.5 million bricks per year).
2. 120 new juss plants. 10,000 houses at an estimated 60 tons per unit would require further expansion of juss manufacture, if continued on present lines, amounting to 120 units (25 tons per day for 200 days per year).
3. 15,000 tons of steel per year. Assuming 1.5 tons of steel per unit.
4. 125,000 tons of cement per year. This estimate is based upon an average use of 12.5 tons per unit and would require the total annual production of 1.19 cement kilns.
5. 500,000 cubic meters of gravel and 280,000 cubic meters of sand per year, based upon 50 and 28 cubic meters per house, respectively.

Thus, if private building continues to grow at its present rate and a subsidized rehousing program of the magnitude indicated is undertaken, very great increases in the present building-materials industry will be necessary.

It is also believed that the projected 1960 rate of construction, with its attendant high level of materials usage, can be maintained for a number of years to come and that little danger of creating excess capacity exists. Iraq's very great need for housing provides ample justification for this belief. Current usage, estimated 1960 requirements for both private building and the rehousing program, and subsequent total 1960 capacity are summarized in Table 63.

At the moment, the quality of materials and the methods of construction in Iraq are poor. Iraq is paying a high price for poor-quality buildings. The building industry throughout the world is very conservative and adopts new materials and methods reluctantly. Despite this inherent difficulty, Iraq now has an opportunity greatly to improve material and construction quality as well as to increase the variety of materials available. The relative scarcity of materials and the probable continuance of high prices should have two important and beneficial effects:

1. To attract new businessmen to the industry who will be more willing to adopt new methods.
2. To encourage builders to experiment with better and cheaper materials. Industrial improvement is frequently stimulated by shortages and high prices.

Despite these effects, it is likely that the adoption of improved methods and materials will not be fast enough to prevent a considerable expansion in the production of traditional materials as well, so that advances will take place on all fronts. Further, there is a danger that the expansion that will be necessary to sustain an ambitious rehousing program will be checked by a shortage of both enterprise and capital. While the Development Board itself should enter the building-materials industry only with great reluctance, it should, nevertheless, be prepared to do so. It should further (and more desirably) be prepared to make capital available to private enterprise for the construction of new plants and the extension and improvement of old ones. Indeed, such a policy is implicit in a large-scale housing program. The Industrial Bank should be instructed to provide medium- and long-term loans to the building materials industry on a liberal basis. If sufficient capital is not made available, opportunities for industrial growth will be neglected and the Development Board's own housing plans delayed.

In the sections that follow an attempt has been made to indicate not only the extent of the industrial opportunities offered by various segments of the building-materials industry, but also to suggest how improved materials and construction standards can be attained at the same time. On the basis of the assumption that 10,000 small houses will be built annually as part of a Government rehousing program, in addition to increased construction of private houses, it was possible to estimate probable future building-material needs. But cheaper and better buildings could be obtained through the use of superior alternative materials. Further expansion of certain segments of the industry will depend upon the speed with which builders adopt new and improved materials and methods. While over-all needs were estimated

TABLE 63

IRAQI BUILDING-MATERIALS INDUSTRY

Item	Present Annual Utilization	New Requirements by 1960			
		Normal Growth	Rehousing Program	Total	Total 1960 Capacity Needs
Bricks (millions per year)	600	300	400	700	1,300
Brick plants	80	40	53	93	173
Juss (tons per year)	750,000	360,000	600,000	960,000	1,710,000
Juss plants	150	72	120	192	342
Steel (tons per year)	20,000	10,000	15,000	25,000	45,000
Cement (tons per year)	150,000[1]	76,000	125,000	201,000	351,000
Cement kilns required[2]	1.43	.72	1.19	1.91	3.34
Gravel (cubic meters per year)	600,000	300,000	500,000	800,000	1,400,000
Sand (cubic meters per year)	330,000	160,000	280,000	440,000	770,000

1. Estimated one-third of present annual domestic production and imports.

2. Estimated kiln capacity required to produce sufficient cement for housing needs.

Table 63 assumes continued use of present materials; alternate materials are not shown. Figures indicate possible magnitude of growth, but are not intended to imply a recommendation that all plants listed should be constructed.

above, it is impossible to say in what proportions new materials will be needed. The estimates presented in following sections therefore should be treated with some caution as they are, at best, only indications of what might be accomplished in terms of industry expansion. They are, however, presented in terms of the degree to which new materials and methods could replace or improve the needed supplies of traditional materials, so that their value to the industry can be judged. Recommendations fall into two main groups:

1. Those for the expansion of existing plants and the building of new ones. Comparatively small-scale operations are envisaged, although large numbers of new plants are recommended. The Board itself should enter this field only if private interests fail to do so; nevertheless, it can take very important and positive steps to facilitate and encourage new ventures and assist in raising the quality of building materials and methods of construction.
2. Those for the positive steps the Board can take to facilitate, encourage, and improve the building and construction industry, by providing capital and setting up organizations designed to improve material and constructional standards.

C. RECOMMENDATIONS (FIRST GROUP)

1. A large proportion of the existing brick plants should be induced to install steam-heated drying equipment. This equipment would be used to replace the present sun-drying method and would permit extension of the production period to 300 days per year from the present 200 days. Thus, a 50% increase in the capacity of each plant so equipped would be effected, and far better bricks could also be produced. The cost of alteration of an existing plant is in the ID 20,000 - ID 30,000 range. It may also be necessary to build a number of new plants, but these should not be encouraged until substantial numbers of dryers have been installed in the existing plants.
2. A number of small plants to manufacture concrete blocks, tiles, pipes, beams, and other products should be established. Concrete-block-making equipment can be purchased for ID 2000 - ID 3000, and equipment costs for other concrete products should not exceed ID 5000 - ID 6000. It may be possible during the next few years to absorb the output of up to 40 plants situated in Baghdad, Basra, and Mosul, and steps should be taken to encourage engineers and contractors to use larger quantities of concrete products.
3. Plants for the production of light-weight aggregate from local clays should be established. A plant of this kind, consisting of a kiln and auxiliary equipment, should cost in the order of ID 100,000. Immediate steps should be taken to encourage the use of lightweight aggregates and further plants established if a satisfactory demand results.
4. Immediate steps should be taken to increase the number of sand-lime and cement-brick plants, and the use of these greatly superior bricks should

be strongly encouraged. Equipment costs for a plant with a daily capacity of 50,000 bricks would be up to ID 75,000, as compared with ID 55,000 - ID 65,000 for a dryer-equipped clay-brick plant of similar capacity. However, it should be noted that this plant equipment could also be used to produce concrete blocks and other products, giving the plant great flexibility.

5. Plants for the production of calcined gypsum for use in the manufacture of gypsum concrete and gypsum blocks should be established in Iraq. A plant with a daily capacity of 100 tons would cost approximately ID 50,000, and block-making equipment of twenty-tons daily capacity would cost an additional ID 15,000 - ID 20,000.
6. A lime industry should be established in Iraq. Lime would provide an important material for the production of superior bricks and a greatly improved mortar. It would also have uses in the agricultural and chemical industries. A modern lime plant with a daily capacity of 100 tons would cost up to ID 100,000. This need not be given a high priority, as lime production by the present small-scale methods can be expanded to meet the immediate needs.

D. RECOMMENDATIONS (SECOND GROUP)

1. The Development Board should immediately indicate to the Industrial Bank that it will be willing to provide funds for the Bank, to encourage private businessmen to take up the opportunities listed above. The highest priority should be given to installing dryers in existing clay-brick plants and the lowest priority to building new clay-brick plants and establishing a large-scale lime industry. In the event of an Industrial Development Finance Co. being established, it should take over this function.
2. Additional funds should be appropriated to the Geological Department of the Ministry of Economics, to enable it to carry out extensive surveys into Iraq's building-material resources. The department should search for new deposits of sand and gravel for use as aggregates; locate and evaluate deposits of clay for use in the manufacture of lightweight clay aggregates; examine and furnish analyses of Iraq's gypsum deposits to interested manufacturers; and search for limestone deposits suitable for the manufacture of limes, natural cements, and hydraulic limes in the years to come. Costs of these necessary surveys will, of course, depend on the intensity and scope of the work, and estimates for appropriation purposes should be obtained at once from the Geological Department.
3. A Building Materials Advisory Board should be constituted to have overall charge of establishing policy on all matters pertaining to building construction in Iraq. This Board should delegate authority and issue directions to the various subordinate committees and laboratories recommended below.
4. A Materials Specifications Committee should be established to prepare adequate and realistic specifications for construction materials in use in Iraq. This committee should be subordinate to the Board recommended

above, and should have at its disposal the services of the testing Laboratory recommended below. It should work closely with manufacturers, but should be completely independent of them.

5. A Building Code Committee should be formed to establish a suitable building code based upon materials and construction methods in use in Iraq. This Committee should also be subordinate to the Advisory Board and should be able to use the testing laboratory facilities recommended below.
6. A Building Material Research Laboratory should be established in Iraq. It should be distinct from the routine testing laboratory and should be directly subordinate to the Advisory Board. It should also be instructed to work closely with the Geological Department of the Ministry of Economics.
7. A Routine Testing Laboratory should be established, which while subordinate to the Advisory Board, should work in close coordination with the two Committees mentioned above. This laboratory, designed primarily for routine testing of materials to determine compliance with specifications, should work with the Research Laboratory but should be distinct therefrom. Research and routine testing are entirely separate functions requiring different facilities and different personnel. Attempts in other countries to combine the two laboratories into one have frequently resulted in the gradual elimination of either research or routine testing, depending upon the interest of the administrator.

E. INDUSTRIAL DEVELOPMENT OF BUILDING MATERIALS

1. Clay Bricks

Clay-brick production in Iraq should be considerably expanded by increasing the capacity of existing plants immediately and by installing new ones as they are required. At the same time special attention should be paid to improving the quality of the bricks produced.

Clay brick is the major material, in point of volume, used in ordinary house construction in Iraq. It is made in about 80 brick factories in various parts of Iraq and is generally of poor quality, particularly in Basra. As is indicated above, the demand for brick will probably increase by 50%, and could be increased by over 100%, within the next five years. This increase in demand may be met in either of two ways: (1) New plant construction may be undertaken that would supplement the present production. Preferably these new plants should produce a better brick than is now being produced in Iraq. (2) A better course of action would be to increase the capacities of the existing plants. Most of the existing plants rely on sun-drying of the brick; consequently, they are limited to about 200 days' production per year. By introducing steam-heated dryers to take the place of sun-drying, the plants may be operated for at least 300 days per year. This then would result in a 50% increase in a total volume of production of brick in any plant that would install the automatic dryer.

The installation of drying equipment to replace the present sun-drying would also result in a better-quality brick. The brick produced by

drying in a modern dryer would be better shaped; the corners and edges would be true; the brick would be laid up in a wall using less mortar, and in general, the quality could be made as high as is possible with the particular clays available in Iraq. The cost of alteration of an existing plant might be in the order of ID 20,000 - ID 30,000. This would provide for wheeled racks to receive the bricks as they come from the extrusion machine and to convey the bricks to the dryer. The bricks would not have to be handled by hand until they are removed from these racks and placed in the kiln. It should be noted that while there would be a saving in hand labor through the use of these dryers, there would be an over-all increase in the amount of labor used per year as a result of the fact that a 300-day year could be worked instead of the present 200-day year. As a result of this greatly increased output, overhead charges per unit of output would fall, and it should be possible to reduce the selling price of clay bricks from 6 to 5 fils each and to provide a better product at the same time.

At present, one plant in Baghdad has installed a dryer and is selling its superior bricks at a premium of ID 1 for 1500 bricks. Since this equipment would, in effect, produce the greatest volume of building material in the shortest time and for the smallest capital investment, it should have the highest priority in the field of building materials.

It is, therefore, recommended that many of the existing brick plants be induced to install dryers, as an alternative to the construction of new plants. Such installation can greatly reduce the estimated 1960 requirement of 173 plants. The 50% increase in individual plant capacity made possible by dryers would permit estimated 1960 total brick requirements to be supplied by 115 plants, provided that all were equipped with dryers. Thus, if the present 80 plants were so equipped, only 35 new plants, rather than 93, would be needed. This estimate assumes that the rate of new construction will reach that projected for 1960, and does not take into account the possibility that new materials will to some extent replace bricks and further reduce the need for new plants.

2. Concrete and Concrete Products

It is recommended that the use of concrete and of concrete products be expanded, both by establishing new plants and by encouraging engineers to use the products of these plants in place of the clay bricks or in addition to the clay bricks and other materials now being used.

In an over-all development of the building industry, such as will take place in Iraq within the next five years, it is not only necessary to expand the present building-materials industry but it is also desirable to provide alternative materials that may be superior in performance to some of the present materials. Concrete and concrete products are within this category. It is generally recognized that the bricks produced in Iraq are poor in comparison with European or American standards. This is not necessarily the fault of the brick manufacturer, but is dependent upon the characteristics

of the clay from which the bricks are made and over which the manufacturer has little or no control. Iraq, however, can make excellent cement, and by the use of concrete and concrete products can make building materials that will be superior to the present brick. There are already a number of individual plants making blocks, tile sewer pipe, curbstones, and other concrete products. These plants should be encouraged to develop and produce a wider variety of concrete products.

As examples of new products, the use of concrete beams prefabricated in a concrete-products plant, to replace the steel ''I'' beams now being used for roof construction, may be cited. Concrete beams use about 1 lb of reinforcing steel per square foot of roof construction, whereas the present ''I'' beam and jackarch construction uses about 5 lb of steel per square foot. Another example might be the use of an interlocking ''T''-shaped block, which may be laid up without mortar by unskilled labor and could become the basis of an industry to furnish the sarrifa dwellers with a cheap building material. A third new product has been developed in the form of a concrete block used for the exterior facing of buildings.

Concrete blocks, some 7½ times the volume of the present brick, are being produced at present for 70 fils, and it may be possible to reduce this to 50 fils. A further cost reduction could, of course, be made if the price of cement were reduced. It may therefore be some time before concrete blocks can be sold as cheaply as bricks, but it should not be forgotten that there is a considerable saving in labor costs and that a much better construction is obtained.

Equipment investment costs are very low. The equipment for a block-making plant can be purchased for ID 2000 to ID 3000, and for a beam-making plant for ID 4000 - ID 6000. A considerable number of such plants should be established, and it should be possible during the next few years to absorb the output of 40 additional plants - 15 to 20 in Baghdad, and 10 each in Mosul and Basra. Labor requirements are modest, probably about 50 men in each plant.

It should be noted that private industry must have some encouragement to produce these new materials. This encouragement may be provided through research and development, which is considered below, and possibly through the provision of financial assistance. It should also be noted that additional supplies of sand and aggregate will be necessary for the development of these products. This also is considered in a later section, dealing with the geological resources of Iraq.

It is estimated that by 1960 the output of an additional 1.91 cement kilns, with a capacity of 350 tons per kiln per day, will be required to provide the building industry with sufficient cement for house-construction needs over and above present levels. Total required kiln capacity was estimated at 3.34 kilns. It is quite probable that the present scheduled expansion of the cement industry is adequate to take care of this anticipated new demand. Known plans of present and prospective cement producers indicate that Iraq will have a capacity of approximately 4000 tons per day by 1960. On a basis of 350 tons per day per kiln, this is equivalent to 11.4 kilns. The 3.34-kiln

requirement therefore is slightly less than one third of the total capacity, leaving the remainder for the various heavy-construction projects.

This estimate was based however, on the continued use of present types of materials, and does not take into account the probable increase in demand for the concrete products mentioned above. It was also estimated above, on the same basis, that 93 new brick plants of the present type and capacity or 35 new dryer-equipped plants would be required to meet the demands of increased house construction. It is entirely possible that 20% of the material volume represented by this new capacity may be replaced by the adoption of concrete block and other new concrete products. This would reduce the need for new, dryer-equipped brick plants from 35 to 23, provided that the present 80 also install dryers. Further, this degree of replacement would require 41,257 tons of cement per year (0.39 kilns), assuming that the new concrete products replaced a portion of the bricks used in wall construction. Total estimated cement kiln requirements may now be calculated:[1]

1.	Present rate of construction	1.43
2.	New construction (1960)	1.91
3.	Brick replacement (1960)	.39
4.	Total	3.73

This additional requirement would bring total cement requirements for house construction to one third of Iraq's predicted 1960 cement capacity, a level not considered sufficiently high to interfere with the requirements of planned heavy-construction projects.

3. Lightweight Aggregates

It is recommended that an industry for the production of lightweight aggregates from clays native to Iraq be established.

The use of lightweight aggregate in modern construction, to replace conventional aggregates, such as sand and gravel, has proven to be very beneficial. Buildings can be made less heavy; settlement and cracking are less prevalent; poured concrete walls provide more flexibility in construction; and lightweight concrete roofs can be made thinner than the present roofs and still maintain equal insulation value. In a climate such as Iraq's, where insulation is of great importance, a 10-inch wall of lightweight concrete has the same insulation value as a conventional 14-inch brick wall or a 19-inch wall made of heavy concrete. See Table 64:

1. For detailed calculation, see Appendix.

TABLE 64

INSULATION VALUES OF BRICK, REGULAR CONCRETE, AND LIGHTWEIGHT-AGGREGATE CONCRETE

	Brick	Regular Concrete	Lightweight Aggregate Concrete
1. Thermal Conductivity (U)	0.343	0.343	0.343
2. Wall thickness to satisfy point 1 (inches)	14	19	10
3. Unit weight (pounds per cubic foot)	120	150	90
4. Allowable working stress (tons per linear foot)	3.4	39.9	18.0

The lightweight aggregate most suitable for production in Iraq is the ''Haydite'' type, made by expanding or bloating clay in a rotary kiln. Such aggregates are widely used in other parts of the world, particularly the United States, and at least one Iraqi manufacturer has sent clay samples for test to the United States for bloating. The product was fully equal to those aggregates produced from U. S. clays. Further, Iraq's clays actually appear better suited to aggregate production than to brick making. From the standpoint of the most economically suitable use for domestic raw materials, this furnishes another reason for shifting from brick to lightweight concrete construction.

At the moment gravel is used extensively as an aggregate and in many parts of Iraq a high transport cost is involved. For example, the cost, including transportation, from Habbaniyah to Baghdad amounts to ID 1.650 per cubic meter. The cost of lightweight aggregate (including machinery capital charges) is likely to be considerably below this figure and should be in the region of ID 1 per cubic meter. As tests have shown local clays to be suitable, it is recommended that immediate steps be taken to establish plants for the production of lightweight aggregate.

A common plant capacity in the United States is based on a kiln that will produce from 200 to 300 cubic meters per day. Such a kiln, with its auxiliary equipment, would cost in the order of ID 100,000. A disadvantage of this industrial development is that very little labor - possibly not more than 50 men - is required. This is a very small amount of employment to provide by the expenditure of ID 100,000, but it is considered that the advantage to building and construction costs and standards would provide more than adequate justification.

In order to estimate the impact of the establishment of production facilities for lightweight clay aggregate on the building-materials industry, it is assumed that for 1960 building-construction needs over and above present levels (see Table 63), one third of the additional bricks required could be replaced by lightweight concrete. Three consequences would follow:

1. Replacement of one third of the bricks needed for additional wall construction would require 370,000 cubic meters of clay aggregate per year (based on 10-inch rather than 14-inch walls and assuming 1 cubic meter of aggregate to every cubic meter of concrete; see Appendix for detailed calculations). In turn, this would require the construction of five plants, each with a capacity of 250 cubic meters per day and operating 300 days per year.
2. An additional one third of the new brick plants projected for 1960 would no longer be needed. Assuming that all plants (present and new) are dryer-equipped, the 35 new plants, already reduced to 23 through adoption of new concrete products, would be further reduced to two. Thus the grand total of dryer-equipped brick plants would be 82.
3. As one cubic meter of lightweight concrete requires 0.224 ton of cement, 370,000 cubic meters of wall construction, equivalent to one third of new brick construction projected, would require 83,000 tons of cement annually, equal to the production of 0.79 kilns. Future kiln requirements, taking into account estimates of both concrete product and lightweight concrete utilization, may therefore be shown:

1.	Present rate of construction	1.43
2.	Additional new construction (1960)	1.91
3.	Brick replacement: concrete products (1960)	.39
4.	Brick replacement: lightweight concrete (1960)	.79
	Total	4.52

This is approximately 40% of estimated 1960 total capacity, and if heavy-construction project requirements so indicate, may demand the planning of additional cement kilns.

4. Sand-Lime and Cement Bricks

It is recommended that additional sand-lime and cement brick plants be established.

The Basra area in particular has poor clay for brick production. It would be a great improvement to supplement clay-brick production with sand-lime and cement bricks, which are extensively used in the United States and elsewhere. In Iraq, sand-lime and cement bricks are delivered at prices competitive with the lower-grade clay brick, although they are of much greater strength and have better moisture-resisting properties. At present, only one local manufacturer of these products is known to exist, although it is understood that equipment for a second factory has been ordered.

Sand-lime bricks are made by mixing about 10% of high-calcium lime with about 90% of sand; pressing this slightly damp mixture in a hydraulic press under pressures of about 100 to 150 tons per brick; and placing the brick in an autoclave, where it is subjected to live steam at a pressure of about 150 psi. When removed from the autoclave, the brick are ready to use.

Cement bricks can be made in the same general manner, using Portland Cement instead of lime, but these are slightly more expensive. Cement bricks are also ready for use upon removal from the autoclave.

Both sand-lime and cement bricks can be made of low porosity and of high strength. Strengths are of the order of 3000 to 5000 psi, as contrasted with the present strength of Iraq clay bricks, which are reported to be of the order of 500 psi. Low absorption makes the brick more attractive in appearance since the tendency towards effloresence (formation of salt, due to evaporation of water) is reduced. Both sand-lime and cement bricks could be made from the fine river sand available widely in Iraq, and would not require the coarser, better grade of sand that is desirable for mortars or for concrete use. Since only a small amount of the mass of the brick is composed of the cementing material, the brick plant may be established at the source of the sand and close to the city where the bricks are to be used. Lime or cement can be transported to the plant at a low unit cost. At the moment, Iraq has relatively little lime production but production can be expanded - first by the expansion of present plants, and as demand increases, by the installation of a modern lime plant. This possibility is discussed in detail in a later section of this report.

The cost of the equipment for a plant to produce 50,000 sand-lime or cement bricks per day or an equal volume of block materials would be approximately ID 75,000, as compared with ID 35,000 for a clay-brick plant of similar capacity; costs of production would be similar to those for clay bricks. It would be desirable to establish these plants, instead of traditional clay-brick plants, on as large a scale as possible, and it is believed that a start should be made without delay.

It should be noted that the same equipment used for the production of sand-lime and cement bricks is widely used in the United States for the production of other autoclaved cement products. This includes such products as concrete blocks, door lintels, and a wide variety of concrete specialties. The great advantage of this process is that a cement product that has been steamed under pressure over night has its full strength upon removal from the autoclave; it is not necessary to cure and age the product further before transporting it to the consumer It should also be noted that despite possible reduction of the future quantity of clay bricks required as a result of the adoption of concrete products and lightweight concrete, a very large demand for clay brick will remain.

If as a result of the substitution of concrete products and lightweight aggregate for brick the 1960 demand for bricks does not rise above a level that can be supplied by 82 dryer-equipped plants (the assumption made in the section dealing with lightweight aggregate), it will still be necessary to increase brick production by approximately 50% over the next five years. There will undoubtedly be a market for a greatly increased production of both traditional clay bricks and substantial quantities of the superior sand-lime and cement bricks. The extent to which clay bricks will be replaced by the new products depends entirely upon the initiative of local businessmen, but

in view of their desirability, the Development Board should encourage the establishment of as large a number of concrete and sand-lime brick plants as possible.

5. Gypsum Products

It is recommended that plants for the production of a good grade of calcined gypsum for use in the manufacture of blocks and gypsum concrete be established in Iraq.

Iraq's predominant use of gypsum, which occurs widely in large deposits, is for the production of juss, a crude gypsum product manufactured under antiquated methods throughout the country. It is completely uncontrolled as to properties and is of a very highly variable nature. Despite widespread use it is not desirable as a material for mortars for exterior walls, because it is slightly soluble in water. If a good grade of gypsum rock is calcined in modern industrial equipment (either in rotary kilns or in kettles), a moderately high-strength product can be produced. This calcined gypsum would have its major use in Iraq as blocks suitable for interior-partition walls. It would be very desirable to lighten the over-all weight of buildings in Iraq, because of the low load-bearing capacity of the soil.

At present, almost all interior-partition walls are made of bricks that weigh about 120 lb per cubic foot. Introduction of gypsum block or other lightweight materials for this purpose has been retarded by the lack of a building code. If these same walls were made of gypsum block, the weight of the wall would be less than 50 lb per cubic foot, so that a large saving in weight in the over-all building would result.

Another use for good calcined gypsum would be in the manufacture of poured gypsum-concrete roofs. The use of this type of roof construction has expanded rapidly in the United States over the past 10 or 15 years. Gypsum concrete consists of a mixture of 85% calcined gypsum with about 15% of a fibrous binder. This is poured as a roof slab to a thickness of six or eight inches, and when set and dry, weighs only about 70 lb per cubic foot, as contrasted with brick at 120 lb per cubic foot, or concrete at 150 lb per cubic foot. It has good insulating value and is fire proof. A gypsum-product industry would use large volumes of gypsum, and would form a market for the present juss producers in the desirable event of their present market for mortar juss being replaced by superior lime or cement-lime mortars.

The equipment for a plant with a capacity of 100 tons per day of good calcined gypsum would cost approximately ID 50,000. The selling price should not exceed ID 5 per ton. It would also be advisable to install a fabrication plant initially of 20-tons-per-day capacity to produce blocks. The equipment would cost about ID 15,000 to ID 20,000, and the product would be considerably cheaper to use than brick, largely because of the greatly reduced labor costs. Employment for approximately 150 men would be provided by each combined plant of this kind.

Again, construction of such plants is considered highly desirable

and should be encouraged in every way by the Development Board. No estimate can be made as to the eventual number to be established, but it can be said that the building industry could certainly absorb the output of at least 10 to 20 plants, provided that initial use of the material proved satisfactory and the results become widely known. In view of uncertainties regarding the rate at which this new material will be adopted, no estimate can be made as to the effect of its introduction upon future requirements for bricks and cement. It is, however, unlikely that the use of other materials will be seriously affected by the use of gypsum products.

6. Lime

It is recommended that a lime industry be established in Iraq.

The present use of juss as a mortar ingredient is widely recognized as being undesirable. Juss is soluble in water, and in time of flood there is a serious danger that many buildings may collapse. This would not happen if lime or cement-lime mortar were used. A straight cement mortar is not only expensive but will not work at all well with the highly absorbent clay brick now produced in Iraq. On the other hand, a mortar made from slaked quick-lime putty mixed with sand will be only slightly more expensive, or possibly no more expensive, than a juss mortar. It will be much more durable and give rise to less danger in case of flood conditions. Mortar of this composition has been used throughout Europe for centuries. In England, for example, the Houses of Parliament, Westminster Abbey, and Buckingham Palace were constructed with mortars made from lime and sand. Lime would also be needed for the production of sand-lime brick and will find uses in the chemical and agricultural markets. Iraq should therefore look upon the establishment of lime production as a desirable objective.

This does not have to have high priority, since lime may be produced by extremely old-fashioned methods, such as those used near Kirkuk. As the lime industry develops, however, it will be highly desirable to modernize the plants and consider installing a plant that would have a capacity of 100 tons per day or more. A modern 100-ton-per-day lime plant would cost approximately ID 100,000, and would employ about 100 men.

As pointed out above, the estimated 1960 building-materials requirement might require the construction of an additional 192 juss plants (making a total of 342) of the present capacity (25 tons per day for 200 days per year). The introduction of traditional and lightweight aggregate concrete and concrete products would reduce the use of brick, and hence, juss, substantially, but on the basis of the assumptions made in Table 65 (additional brick production replaced to the extent of 20% by concrete products and 33% by lightweight cements), there would still be a need for 90 new plants by 1960 - a 60% increase in the present size of the industry. This estimate is of course low, since it does not include the use of juss as wall plaster, a use that will continue regardless of the wall material used. Therefore, 60% is regarded as the minimum expansion in mortar production that will be necessary by 1960.

TABLE 65

EFFECTS OF INNOVATIONS ON 1960 BUILDING-MATERIALS REQUIREMENTS

FROM TABLE 63 Present material and requirements	BRICK- 80 Plants		JUSS- 150 Plants		CEMENT- 1.43 Kilns		STEEL- 20,000 Tons		SAND- 330,000 Cu. M.		GRAVEL- 600,000 Cu. M.		
	Need	1960 Tot.	Need	1960 Tot.	Need	1960 Tot.	Need	1960 Tot.	Need	1960 Tot.	Need	1960 Tot.	
From Table 63, based on present Materials and estimated new const.	93	173	192	342	1.91	3.34	25,000	45,000	440,000	770,000	800,000	1,400,000	
INNOVATIONS: effects of innovations listed below on Table 63 requirements.													New plants and/or equipment required by innovation only
1. Steam-drying equipment for brick plants will reduce plant estimates to:	35	115	-	-	-	-	-	-	-	-	-	-	1. 80 dryers at ID 20/000 - 30,000 each, plus 35 new dryer - equipped plants
2. 20% replacement of new brick requirements by concrete and products will alter plant req's to:	23	103	154	304	2.30	3.75	Concrete beams will reduce steel demand		532,000	862,000	984,000	1,584,000	2. Uncertain, possibly 35-40 new concrete-product plants at ID 2,000 - 6,000 each
3. Assuming Innovations (1) and (2) take effect, an additional 38% replacement of new brick needs by lightweight concrete will alter req's. to:	2	82	90	240	3.09	4.52	-	-	660,000	990,000	-	-	3. 370,000 Cu.M. of clay aggregate -- five plants at ID 100,000 each
4. Production of sand - lime and cement bricks	-	-	-	-	Some increase		-	-	Will require fine sand		-	-	4. Will replace clay-brick plants (ID 55,000 - 65,000 with dryer) with new brick plants (ID 75,000)
5. Manufacture of calcined gypsum and gypsum block	Gypsum will reduce brick demand		-	-	Some Reduction		-	-	Some Reduction		Some Reduction		5. Industry could absorb 10-20 plants at up to ID 70,000 each
6. Production of lime for mortar and other uses.	-	-	Will reduce demand for Juss		-	-	-	-	-	-	-	-	6. Industry could absorb several plants of 100-ton-per-day capacity each _ plants cost up to ID 100,000
TOTAL POSSIBLE EFFECT OF ALL INNOVATIONS:	2	82	90	240	3.09	4.52	25,000	45,000	660,000	990,000	984,000	1,584,000	
	Less reductions caused by use of gypsum block, and provided dryers are adopted.		Less reductions caused by use of lime mortar, which may be offset by increased use of both as wall plaster.		House-construction needs may total 40% of Iraq's estimated 1960 cement capacity.		Less reductions caused by use of concrete beams.		Possible increase of 200% over present usage, less reduction caused by gypsum roofs replacing concrete.		Less some reduction caused by replacement of concrete by gypsum.		

This minimum growth, which is equivalent to over 450,000 tons of mortar annually, should justify the erection of several lime plants of the capacity indicated.

A summary, showing the possible effects of all of the above innovations, is given in Table 65.

7. Marble

Iraq has available in the north, particularly in Erbil Liwa, quantities of marble of varying types and colors. Small amounts are currently used domestically, but a marble industry as such has not been established. Very little information is available on the quantity and quality of Iraq's marble, and it is the purpose of this report to indicate the steps that must be taken before a decision can be reached on whether to establish a marble industry in Iraq.

The development of modern marble industries both in Europe and in the United States has been based almost entirely upon domestic demand. Italian producers, for example, sell their marble primarily on the home market, and export only small quantities of very high-quality varieties, to other European countries and to the United States. There are, unfortunately, no large foreign markets for marble. The United States' annual imports of high-quality special marbles amount to only ID 40,000 - ID 50,000 - an insignificant fraction of total U. S. consumption - and European imports are obtained from Italy. It is possible, however, that the quality of Iraqi marble is such that it could command a special place in world markets and secure a very high price. High-quality marble imported into the United States ranges in price from ID 35 to ID 350 per cubic meter, averaging ID 66.5 per cubic meter. Varieties of this kind could be exported very profitably, but more knowledge of the exact nature of Iraq's deposits must be obtained before an assessment of potential export markets can be made.

Present domestic demand for marble is very small and the potential demand is impossible to calculate. Some indication of potential use may, however, be obtained from an examination of U. S. consumption statistics. In the United States, annual per capita consumption of blocks is 0.00018 cubic meters, and of two-inch slabs is 0.0004 square meters. If Iraq's annual domestic demand for marble rose to this rate, there would be an annual demand for about 1000 cubic meters of blocks and 2200 square meters of slabs, which would be sufficient to absorb the output of one small to medium-size plant. It must be emphasized that the U. S. demand is derived from a very advanced buildings-material market that does not exist in Iraq. If encouragement were given to the domestic use of Iraq's marble, particularly as a decorative facing, it might be possible to stimulate its use, in view of the large amount of public and private building foreseen for the future. If high-quality varieties are discovered to exist, it may be possible to develop export markets.

It is therefore recommended that the Geological Department of the Ministry of Economics be requested to report on the extent and quality of the

Rowanduz deposits and prepare polished samples for inspection by foreign importers and Iraqi architects and contractors. If the deposits are found to be satisfactory in extent and if their quality is attractive to foreign buyers and Iraqi builders, it may prove to be economically desirable to establish a marble industry in Iraq. Although a final decision cannot be made until this investigation has taken place, the preliminary cost estimate shown in Table 66 has been prepared to assist the Board in its future planning. The estimated investment of ID 107,500 allows for a plant to produce 1000 cubic meters of marble as either blocks for export or as slabs for domestic use, and includes an allowance of ID 15,000 for housing at the quarry site. Operating costs have been based on the production of 1000 cubic meters as block marble for export and show that the estimated cost is ID 37/800 per cubic meter. If the entire production were produced as slabs for domestic use, additional labor and supervision would be required to saw and polish the marble. This additional labor would raise the cost of production to ID 48/600 per cubic meter.

If the quality of the Rowanduz deposits is attractive to foreign importers, it should be possible to develop export markets, but transportation and handling charges will be very heavy. Transportation to Basra would be difficult and expensive and would result in an fob price of at least ID 50 per cubic meter. Shipment to European and American ports would raise the price at which Iraq's marble could be sold to a substantially higher figure that would be competitive only if the quality proves to be very high.

TABLE 66

ESTIMATED OPERATING COSTS FOR MARBLE PLANT TO PRODUCE 1000 CUBIC METERS OF MARBLE ANNUALLY

Investment:	Plant and Equipment			ID 92,500
	Housing at Quarry			15,000
Production:	1000 cubic meters			
Operation:	250 days per year			
Item	**Units**	**ID per Unit**	**Units per Cubic Meter**	**ID per Cubic Meter**
Labor				
Quarrying	Man-days	0.350	32	11.200
Supervision				
20% of Direct Labor				2.240
Maintenance				
5% of Plant and Equipment Cost				4.625
Depreciation				
10% of Total Investment				10.750
Allowance for Depletion				0.250

TABLE 66 (continued)

ESTIMATED OPERATING COSTS FOR MARBLE PLANT TO PRODUCE 1000 CUBIC METERS OF MARBLE ANNUALLY

Item	Units	ID per Unit	Units per Cubic Meter	ID per Cubic Meter
Overhead				
25% of Labor and Supervision				3.360
Other Charges				
1% of Total Investment				1.075
Interest				
4% of Total Investment				4.300
				37.800

8. Other Materials

A large segment of the Iraq population, the Sarrifa dwellers, have now an income so low that they cannot afford anything but the cheapest type of housing - the mud hut made by their own labor from materials at hand. While economic development will raise living standards, it will probably be many years before the present Sarrifa dwellers can afford to purchase much material for house construction, or before new houses can be built for them. To improve the living conditions for these people, it is highly desirable to develop a good method for stabilized-mud construction. Other countries, including the United States and Egypt, are already using stabilized mud and studying its problems.

Ordinary dried mud provides a temporary shelter from sun, wind, and cold but does not provide suitable protection from rain or flood, as water softens it and causes the buildings to collapse. Mud stabilized by the addition of small amounts of a stabilizing agent, such as portland cement, lime, asphaltic emulsions, or other chemicals, is much more resistant to the action of water.

Unfortunately, the experiences of other countries cannot be directly applied in Iraq. Each clay is a separate problem, and stabilizing agents applicable to one type of clay have not been suitable for other types. The production of stabilized mud products in Iraq therefore, requires research to develop the best combinations of stabilizers for the local clays. Further reference to this problem is made in the recommendations for the Building Materials Research Laboratory which appear later in this report.

Development of hardboard, a rigid nonmineral product made from reeds, is a promising possibility. This product is discussed more fully in the report section dealing with paper, but its chief use should be in the building-materials field. If produced at a reasonable price it could replace

both steel and wood as shuttering (formwork) for concrete. At present, shuttering is expensive either in wood or steel. Another use for hardboard would be as a wall finish. Several manufacturers are known to be interested in developing interior-partition walls or possibly using this board as a ceiling finish if it is made available.

Samples of softboard made from rice husks and from reeds have shown considerable promise for another type of board for structural purposes. These boards, while not as hard as the hardboard, have better thermal characteristics and are better from the standpoint of sound absorption. They resemble ''Celotex'' in their general characteristics and would have use as interior-wall finishes.

Iraq also has supplies of bitumen or asphalt that might very well become the basis of an asphalt-tile industry. Asphalt tile is particularly well adapted for laying on top of concrete floors. It can be produced in a range of the darker colors, and provides a softer, more resilient floor covering than the concrete tile now used so extensively in all parts of Iraq. The new bitumen refinery could well serve as a source of supply for this industry.

F. DEVELOPMENT OF BUILDING MATERIALS

Throughout this study it has been apparent that many Iraqi businessmen are aware of the new materials and methods available, and are willing and competent to enter into their production and to improve the building situation in Iraq. They need, however, capital and methods of stimulating the use of new materials. The following sections outline one method by which this may be accomplished. They are based to a considerable extent upon observations of the performance of similar organizations in the United States and Great Britain. In a short investigation of this nature, it is difficult to offer a fully rounded program, and the procedures listed should be taken only as an outline of a suggested method of procedure.

1. Finance

The opportunities set out above are of the type which the Development Board itself should not attempt to take up. The individual plants are small in size and the number required will probably exceed 100. Nevertheless, they are of the greatest importance both to Iraq's industrial program and to the Board's own housing plans. The Development Board should therefore take immediate steps to make capital available to businessmen who are willing to improve their existing plants or establish new ones. The Industrial Development Finance Company, which is recommended elsewhere, would be the appropriate agency, but action should not be delayed pending a decision to establish the company. As an interim measure the Industrial Bank should be provided with funds for this purpose. The order of priority is made clear in the discussion of the opportunity recommendations, where it is indicated that the highest priority should be given to the installation of dryers in existing traditional-type brick plants, and the lowest to the building of new traditional brick

plants (although some additions will probably be necessary) and the establishment of a lime plant.

2. Geological Survey

It is recommended that additional funds be appropriated for the use of the Geological Department of the Ministry of Economics.

The Geological Department has a very heavy task to carry out in evaluating the mineral resources of Iraq, work that will be additional to the current Mineral Survey. With only a small staff, it has done excellent work in determining the availability of suitable limestones for Portland Cement manufacture. It has also handled other problems, such as searching for mineral reserves, but the staff is entirely inadequate for the projects necessary for the development of the building-materials industry.

One item in particular needs immediate attention. The cost of sand and gravel aggregates of quality suitable for making concrete in the Baghdad area is extremely high. This is due to the location of the only known suitable aggregate at Lake Habbaniyah, a distance of about 100 kilometers, which makes the cost of freight far more than the cost of the aggregate itself. Washed, coarse aggregate, for example, is delivered in Baghdad for ID 1.650 per cubic meter, of which ID 1.200 is transportation cost. If suitable deposits of sand and gravel of gradations suitable for use in concrete could be located closer to Baghdad, it would result in great savings in the cost of construction in Baghdad. Unless it is known where the sand and gravel is located and unless the companies interested in the development of the sand and gravel resources can obtain this information, the cost of concrete will continue to be almost prohibitively high in Iraq.

It should be noted that as listed in Table 63, new-construction demands for aggregate will by 1960 be more than 100% above present requirements. The introduction of new building materials will not reduce the demand for sand and gravel aggregates, since they will replace wall-construction materials not requiring cement. In fact, the use of traditional and lightweight concrete products will sharply increase the need for sand and gravel, thus increasing the necessity of finding new and more favorably located sources of supply.

In a previous section, a recommendation was made for the establishment of lightweight-aggregate plants. These plants are contingent upon having a supply of clay of suitable bloating characteristics. Here again, the Geological Department can be of great assistance to manufacturers in locating and evaluating deposits of clays suitable for the manufacture of lightweight aggregate.

Another recommendation involves the establishment of gypsum-manufacturing plants for the production of calcined gypsum. While gypsum is reported to be generally available throughout Iraq there is little information on the quality of the gypsum. Again the Geological Department can render a very valuable service to the building industry of Iraq by locating suitable

deposits for the manufacture of superior gypsum products.

An item of potential interest is natural cement which is widely used in the United States as a mortar-making ingredient. It has not been recommended, simply because it is not known whether natural cement-rock exists in Iraq. It is quite probable that natural cement-rock does exist, particularly in the northern areas of Iraq. Rocks that are primarily calcium carbonate and contain approximately 20% of silica, iron, and aluminum as impurities will make natural cement. Many of these natural cement-rocks are not suitable for Portland Cement manufacture, because of the high magnesia content, but this is not considered a detriment to natural-cement manufacture. In fact, most of the rocks in the United States that are used for its manufacture do contain large amounts of magnesia. There is a great need for further geological information on the location, extent, and analysis of these various low-priced commodities used for making building materials. The Geological Department is the proper agency for this development, and it is therefore recommended that this Department be expanded to enable it to provide the information on which manufacturers may base their plant expansions. A substantial increase in the annual budget of this department is considered necessary to finance this broad scope of activities, and cost estimates for new appropriations should be requested from the Geological Department.

3. Building Materials Advisory Board

It is recommended that an advisory board be constituted to have over-all charge of the direction of the items pertaining to building construction in Iraq. This board should consist of technical men with an interest in construction; they should be men of very high caliber. It is suggested that the board be composed of the Director General of Public Works, the Director General of Industry, the Dean of the Engineering College, and a high-level representative of the Development Board - possibly with the addition of a technical representative from the Industrial Bank. The duties of this Board would be to supervise the work of subordinate committees and laboratories, all of which would be interested in the development of the building industry in Iraq. This Board should be a policy-making organization and should delegate much of its authority.

4. Material Specifications Committee

It is recommended that a mechanism be provided whereby adequate and realistic materials specifications will be developed for the Iraq building-materials industry.

At present, the type and quality of building materials in Iraq are specified in building contracts (particularly in Government construction), but these specifications are rarely, if ever, enforced, because there is no adequate testing laboratory to discover whether the materials meet the requirements of the specifications. Furthermore, specifications are frequently based upon British or American practice, and these specifications are not

necessarily applicable to Iraq materials. It is not fair to the Iraq producer of brick, for example, to demand that he produce a brick that will meet British specifications, because it is absolutely impossible for him to do so with the clays that are available to him. He is forced, by the quality of raw materials, to make a brick that has a higher porosity than would be permitted in England and that has a lower compressive strength and modulus of rupture.

Three developments are necessary to ensure the necessary improvements. First, an adequate and realistic specification for materials; secondly, enforcement of the specifications and testing of the materials (particularly on Government contracts with provision for testing for private industry when necessary); and thirdly, laboratories with facilities for such testing.

A committee should be charged with the duties of preparing realistic specifications for materials for use in construction. In order to do this, it should be composed of men with an interest in materials, with a knowledge of materials testing, with some background in the preparation of specifications, and with a knowledge of the use of materials. The committee might very well be composed of designated officers of the organizations participating in the Building Materials Advisory Board, but should remain subordinate and responsible to it. An independent consultant, experienced in materials specifications and in building codes, might well be added to this committee, possibly as chairman. The committee should be charged with preparing specifications for all construction materials. It should be concerned with materials only and not with construction, which is properly the function of the Building Code Committee (discussed below). This group should work closely with the manufacturers and should have authority to call upon manufacturers for advice whenever a material is under consideration. It must not, however, be dominated by manufacturers and should be completely independent of them or of any other outside influence. This committee must also work closely with a proposed Testing Laboratory and must have the power to request the laboratory to carry out tests when they are needed in the preparation of specifications.

5. Building Codes Committee

It is recommended that Iraq establish a building code based upon the materials and methods of construction used in Iraq.

Most nations have found it necessary to provide building codes to protest the safety and health of the inhabitants. Building codes are necessary to ensure that safe load limitations are not exceeded in the design and erection of buildings; to permit and encourage new building materials by providing adequate construction tests and approval for their use as adequate data become available; and to insure that buildings are erected with due regard to sanitation, fire laws, and safety. It would not be satisfactory for Iraq to adopt the building codes of any other country. The codes of the United States, for example, could be used as a guide showing what materials and types of construction might be considered in the Iraq code, but should

not be used to control the code. Iraq should develop its own code, based upon its own practices and resources. Such a code must be developed by a committee of engineers who are familiar with Iraq's building construction. This committee must also have available to it a laboratory for testing the compliance of the materials with the code. The routine testing laboratory might carry out this function. Furthermore, the work of the code committee must be based on adequate materials specifications.

A building code is of no value unless it is enforced. The enforcement of a building code in the cities would be relatively easy and could be gradually extended to smaller urban areas as experience grows. Architects or engineers should be required to submit plans for review in advance of receiving a building permit. After the plans have been approved as being in conformity with the code, an occasional inspection of work in progress will be necessary.

A properly designed building code can greatly encourage the manufacturers of new materials to proceed with their projects, since they know that if a material is once approved and accepted by some Governmental agency, such as the Building Code Committee, sales to private builders are likely to increase.

6. Building Materials Research Laboratory

It is recommended that a laboratory for research and development of building materials be established in Iraq. A research laboratory would make an important contribution toward the solution of many building problems. It might perhaps be patterned on the Building Research Station in London, which serves British industries in extremely able fashion. Any British building materials supplier or contractor can call upon this Laboratory for advice and help. The Laboratory should be established at Baghdad, probably in conjunction with the Routine Testing Laboratory mentioned below, and the Laboratory Director should be responsible directly to the Building Research Advisory Board. The duties of this laboratory would be as specified by the Building Research Advisory Board, but should consist primarily of research and development on building materials. This is distinct from the problem of routine testing. It would need certain major items of equipment, for example, a rotary kiln, with which problems pertaining to cement, lime, gypsum, and bloated clay aggregates could be handled. A few of the suggested problems may give a better idea of the type of work this laboratory would be expected to do.

One of the problems to which attention has already been drawn is that of producing bloated clay aggregates. This laboratory could be charged with the duty of studying the clays available in Iraq and their potentialities for the production of lightweight aggregate. In this and other fields, the laboratory should work in close conjunction with the Geological Department of the Ministry of Economics and should make exploratory physical and chemical tests to determine which clays were suitable for this aggregate production. Another problem that might fall within the scope of the laboratory's work would be a

study of the limestones in Iraq to determine their suitability for making hydraulic limes or natural cements. Hydraulic limes can be made at a price much lower than Portland cement. They will produce mortars that are much superior to juss in durability, and when properly sanded, are probably no more expensive than juss. The location of suitable deposits of hydraulic lime or of natural cement and a study of the methods of burning, grinding, and hydrating these materials would be extremely valuable to Iraq.

Another problem that could be studied by the Research Laboratory would be methods of making watertight roofs. This is a serious problem in Iraq and requires careful study. In many cases, roofs are waterproofed with a layer of bitumen. It is well known that the use of bituminous felt for a built-up roofing would be more satisfactory, but the problem is to obtain a continuous permanent waterproof membrane at a reasonable cost. This would require a very thorough investigation.

The problem of producing a stabilized-mud construction for use by the Sarrifa dwellers has already been mentioned in this section of the report. Since it is impossible to translate directly to Iraqi conditions the experience of other countries, because of the variation in types of mud and clay, this becomes a problem for the Research Laboratory, to develop the best and most economical stabilizing agent for use with the local raw materials. This problem may require several years for its ultimate solution, but the value of a satisfactory type of stabilized-mud construction to Iraq would be incalculable.

Many other problems might be handled by the Research Laboratory, and it is very important that it should be established as soon as possible. Initially it could be established on a very small scale, but it should be enlarged as it demonstrates its worth and ability.

7. Routine Testing Laboratory

It is recommended that a routine testing laboratory be set up to provide control tests for materials used in all Governmental construction and to develop information for the use of the Building Code Committee and the Materials Specifications Committee. The routine testing laboratory should be set up in Baghdad, but it is possible that subsidiary Laboratories should be set up for control purposes in Basra and in Mosul. The duties of this laboratory should be to test materials as required for any Governmental Construction; to test materials for private manufacturers or organizations if, in the opinion of the Advisory Board, such tests should be carried out; to develop methods of tests; and to make tests upon any materials, as requested by either the Building Code Committee or the Materials Specifications Committee. It must work in close coordination with both of these Committees, and its activities should also be coordinated with the Research Laboratory. It would be very inadvisable to combine this laboratory with the Research Laboratory recommended above, as the two types of work are very different from each other and require men with different training and outlook.

G. APPENDIX

1. Probable Expansion of Private Housing Construction

(Estimates based upon Baghdad construction data - doubled for the entire country)

BAGHDAD CONSTRUCTION RATE

Year	New Houses	Houses & Buildings Expanded	Total
Apr. 52 - Mar. 53	1,941	550	2,491
Apr. 53 - Mar. 54	2,145	1,491	3,636
Apr. 54 - Mar. 55	2,304	1,876	4,180
Apr. 55 - Mar. 56	2,500 Estimated	2,100 Estimated	4,600 Estimated
Apr. 56 - Mar. 57	2,700 "	2,300 "	5,000 "
Apr. 57 - Mar. 58	2,900 "	2,450 "	5,350
Apr. 58 - Mar. 59	3,100 "	2,600 "	5,700
Apr. 59 - Mar. 60	3,300 "	2,700 "	6,000

Assume Iraq total for 1960 is double that for Baghdad, or 12,000 houses.

2. Materials Estimates: Current Private Construction

a. Bricks

Iraq's 80 brick factories produce 600 million bricks per year. Average annual capacity is therefore 7.5 million bricks per plant. Baghdad's construction of approximately 4000 houses during the last recording period required 300 million bricks, or an average 75,000 bricks per house (confirmed by contractors' estimates).

b. Juss

Iraq's 150 juss plants produce 750,000 tons of juss per year, based upon industry estimates. Average annual capacity is therefore 5000 tons per plant, or 25 tons per day for 200 days' operation. Iraq's construction of an estimated 8000 houses in the last recording period required an average of 90 tons of juss per unit (confirmed by contractors' estimates).

c. Steel

Iraq's construction of an estimated 8000 houses required an average of 2½ tons of imported steel ''I'' beams per unit, or a total of 20,000 tons.

d. Cement

Domestic cement capacity plus imports total 450,000 tons per year. It is assumed that one third of this amount, or 150,000 tons, is used for house construction. For calculation purposes, it has been further assumed that one cement kiln similar to those now being installed has a total capacity of 105,000 tons per year, or 350 tons per day for 300 days' operation. Thus, current house construction in Iraq requires an equivalent kiln capacity of 1.43. Iraq's construction of an estimated 8000 houses required, therefore, an average of 19 tons per unit.

e. Gravel

Approximately four cubic meters of gravel are required for each ton of cement used in concrete manufacture. For calculation purposes, it has been assumed that each house requires 75 cubic meters of gravel.

f. Sand

Slightly more than two cubic meters of sand is required for each ton of cement used in concrete manufacture. For calculation purposes, it has been assumed that each house requires 40 cubic meters of sand.

3. Materials Estimates: Government Rehousing Program

Building-material requirements per unit for a Government rehousing program of 10,000 units per year are estimated below. It has been assumed that these will be both smaller and lower in cost than the private dwellings considered above.

1.	Bricks	40,000 per house
2.	Juss	60 tons per house
3.	Steel	1.5 tons per house
4.	Cement	12.5 tons per house
5.	Gravel	50 cubic meters per house
6.	Sand	28 cubic meters per house

4. Calculations: Total New Materials Requirements by 1960

The calculations shown below furnish the basis for Table 63. They show annual building materials requirements for 1960 over and above present construction levels. Thus, they take into account both estimated demands for additional private construction and a projected Government rehousing program, for which materials estimates per unit were made above.

a. Bricks

4,000 units/yr x 75,000 bricks/unit	=	300,000,000 Bks/yr
10,000 units/yr x 40,000 bricks/unit	=	400,000,000 Bks/yr
Total		700,000,000 Bks/yr

$$\frac{700,000,000 \text{ bricks}}{7,500,000 \text{ bricks/plant}} = 93 \text{ new brick plants}$$

b. Juss

4,000 units/yr x 90 tons-unit	=	360,000 tons/yr
10,000 units/yr x 60 tons/unit	=	600,000 tons/yr
Total		960,000 tons/yr

$$\frac{960,000 \text{ tons}}{5,000 \text{ tons/plant}} = 192 \text{ new juss plants}$$

c. Steel

4,000 units/yr x 2.5 tons/unit	=	10,000 tons/yr
10,000 units/yr x 1.5 tons/unit	=	15,000 tons/yr
Total		25,000 additional tons of steel/yr

d. Cement

4,000 units/yr x 19 tons/unit	=	76,000 tons/yr
10,000 units/yr x 12.5 '' ''	=	125,000 tons/yr
Total		201,000 tons/yr

$$\frac{201,000 \text{ tons/yr}}{105,000 \text{ tons/kiln}} = 1.91 \text{ additional cement kilns}$$

e. Gravel

4,000 units/yr x 75 cu. m./unit	=	300,000 cu. m./yr
10,000 units/yr x 50 cu. m./unit	=	500,000 cu. m./yr
Total		800,000 additional cu. m. of gravel/yr

f. Sand

4,000 units/yr x 40 cu. m./unit	=	160,000 cu. m./yr
10,000 units/yr x 28 cu. m./unit	=	280,000 cu. m./yr
Total		440,000 additional cu. m. of sand/yr

5. Calculations: Effects of the Introduction of New Materials and Methods upon Total New Materials Requirements by 1960

The calculations shown below furnish the basis for Table 65. They

show the extent to which Iraq's total new material requirements by 1960 could be met by the introduction of new building materials and production methods. In order to show the effect of this introduction upon the new plant and material requirements calculated above, it has been arbitrarily assumed that fixed percentages of present materials will be replaced by new materials. Calculations may be readily revised when (as it undoubtedly will) replacement takes place to a greater or lesser extent than that assumed.

a. Introduction of steam drying equipment in brick factories

173 brick factories x 7.5 x 10^6 bricks/yr = 1,297.5 x 10^6 bricks. Introduction of steam dryers would permit a 300-day-per-year operation instead of the present 200 days, or a 50% increase in annual capacity. This increase would raise average annual plant capacity from 7.5x10^6 to 11.25x10^6 bricks.

Therefore: $\frac{1,297.5 \times 10 \text{ bricks}}{11.25 \times 10^6 \text{ bricks/plant}}$ = approximately 115 plants.

That is, if the present 80 factories were all equipped with dryers, an additional 35 dryer-equipped plants would have to be built to supply Iraq's estimated 1960 needs for brick.

b. 20% replacement of new-brick requirements by concrete and concrete products

(1) **Effect upon estimated new brick plant requirements.** Total new bricks needed by 1960 = 700 x 10^6. 20% replacement of this amount would eliminate new plant capacity required to produce (.20 x 700 x 10^6) = 140 x 10^6 bricks.

This is: $\frac{140 \times 10^6 \text{ bricks}}{11.25 \times 10^6 \text{ bricks/dryer-equipped plant}}$ = approximately 12 plants.

Therefore, the need for new brick plants could be reduced from 35 to 23, provided that the present 80 also install dryers.

(2) **Effect upon estimated new juss plant requirements.** This calculation assumes that a 20% replacement of bricks used in wall construction would cause a corresponding reduction in the amount of juss required. This reduction would not take place to the extent indicated, since juss in lesser amounts would be required for concrete block, and would continue to be used as wall plaster. However, the calculation is shown in order to furnish a reasonable indication of what could take place if concrete products were to be used more widely.
192 new juss plants required x 20% reduction in juss use = elimination of approximately 38 plants. Therefore, 192 - 38 = 154 new plants would still be required.

(3) **Effect upon new cement kiln requirements.** A 20% replacement of conventional wall materials by concrete and concrete products would not reduce the need for cement, since this is currently used in foundation,

floor, and roof construction. Rather, it would increase the need for cement by that amount of cement required for the new concrete products. The following calculation again must be taken as a rough approximation, in view of uncertainties regarding types of new products and their rate of adoption.

Total new bricks needed by 1960 = 700×10^6.

Assume 460 bricks per cu. m. of wall. Therefore, new brick requirements are equivalent to:

$$\frac{700 \times 10^6}{460} = 1.52 \times 10^6 \text{ cu. m. of wall.}$$

20% replacement of this amount by concrete = $.20 \times 1.52 \times 10^6$ cu. m. of concrete wall.

However, for equivalent insulation, concrete walls must be 19 inches thick as compared with 14 inches for brick. Therefore, total concrete requirement would by $19/14 \times 3.04 \times 10^5$, or 4.125×10^5 cu. m.

0.2 tons of cement are required for each cu. m. of concrete. Therefore, the cement requirement is:

0.2 tons/cu. m. x 4.125×10^5 cu. m. = 82,500 tons of cement.

However, cement block is assumed to require only 50% of this material needed for a solid concrete wall. Therefore, the total cement requirement is estimated to be:

.50x82,500 tons = 41,250 tons of cement.

Therefore, additional kiln capacity required is:

$$\frac{41{,}250 \text{ tons}}{105{,}000 \text{ tons/kiln}} = 0.39 \text{ kilns.}$$

(4) **Effect upon gravel requirements.** Estimating 4.46 cu. m. of gravel for each additional ton of cement required indicates that 4.46 cu. m./ton x 41,250 tons, or 184,000 cu. m., of gravel will be needed.

(5) **Effect upon sand requirements.** Estimating 2.23 cu. m. of sand for each additional ton of cement required indicates that 2.23 cu. m./ton x 41,250 tons, or 92,000 cu. m., of sand will be needed.

c. **One-third replacement of new brick requirements by lightweight concrete, employing clay aggregate as a basic raw material**

(1) **Effect upon new-brick-plant requirements.** Total new bricks needed by 1960 = 700×10^6.

A one-third replacement of this amount would eliminate new plant capacity required to produce $(1/3 \times 700 \times 10^6) = 233 \times 10^6$ bricks.

This is: $\frac{233 \times 10^6 \text{ bricks}}{11.25 \times 10^6 \text{ bricks/dryer-equipped plant}} =$ approximately 21 plants

Therefore, the 35 new plants, already reduced to 23 by the introduction of concrete products, could be further reduced from 23 to two, assuming that the present 80 also install dryers.

(2) **Effect upon new-juss-plant requirements.** A one-third replacement of bricks used in wall construction by lightweight concrete walls would reduce the need for juss as a mortar. Again, the reduction would not take place to the extent indicated, since juss might still be required as wall plaster. The calculation, therefore, shows a more severe reduction than that anticipated. 192 new juss plants required x a one-third reduction in juss use = elimination of 64 plants.

Therefore, the 192 plants, already reduced to 154 through increased use of concrete products, could be further reduced to a requirement of 90 new plants.

(3) **Effect upon new-cement-kiln requirements.** Again, replacement of bricks by lightweight-concrete walls would increase, rather than reduce, the need for cement. Total new brick-wall requirements are estimated at 1.52×10^6 cu. m. Of this amount, it is assumed that 0.52×10^6 cu. m. is replaced by lightweight concrete. However, for an equivalent insulation value, lightweight-concrete walls need be only 10 inches thick, as compared with 14 inches for brick. Therefore, total concrete requirements would be $10/14 \times 0.52 \times 10^6$ cu. m., or 3.7×10^5 cu. m. 0.224 tons of cement are required for each cu. m. of lightweight concrete. Therefore, total cement needed is .224 tons/cu. m. x 3.7×10^5 cu. m. = 83,000 tons of cement. Therefore, additional kiln capacity required is:

$$\frac{83{,}000 \text{ tons}}{105{,}000 \text{ tons/kiln}} = 0.79 \text{ kilns}$$

(4) **Effect upon sand requirements.** 1.54 cu. m. of sand is required for each additional ton of cement. Therefore, total new sand requirements are: 1.54 cu. m./ton x 83,000 tons = 128,000 cu. m. of sand.

CHAPTER III

INDUSTRIES BASED ON DOMESTIC AGRICULTURE

CHAPTER III TABLE OF CONTENTS
INDUSTRIES BASED ON DOMESTIC AGRICULTURE

	Page
I. INTRODUCTION	197
II. NEW INDUSTRIAL OPPORTUNITIES	198
A. Date Product Industries	198
1. Introduction	198
2. Recommendations	198
3. Date Syrup and Invert Sugar	199
4. Animal-Feed Concentrate	202
5. Date Alcohol	205
6. Date-Research Program	207
B. Production of Pulp and Paper in Iraq	214
1. Introduction	214
2. Recommendations	214
3. Market for Paper and Paper Products	215
4. Resources	216
5. Manufacture of Paper from Reeds	219
6. Costs and Investment	221
7. Special Problems and Considerations	224
8. Means of Establishment	227
9. Alternate Processes of Pulp Productions	229
10. Hardboard from reeds	229
11. Appendix	231
C. Sugar Industry	244
1. Introduction	244
2. The Cultivation of Sugar Beets	245
3. The Refining of Sugar Cane	248
4. The Prospects for a Sugar Industry in Iraq	248
III. IMPROVEMENT AND DEVELOPMENT OF EXISTING AGRICULTURAL INDUSTRIES	249
A. The Recommended Programs	249
1. Agricultural Extension	249
2. Capital and Credit	250
3. Health and Hygiene	250
4. Commodity - Grading Improvement	251
B. Animal-Product Industries	251
1. Introduction	251
2. Dairy Product Industries	252
3. Slaughterhouses and Meat Preparation	255
4. Leather and Leather Products	259
C. Grain-Storage, Flour-Milling and Baking Facilities	264
D. Vegetable Oil and Soaps	266
1. Development of the Industry	267
2. By-Products of Vegetable-Oil Industry	268
E. Textiles Other than Rayon	269
1. Cotton Textiles	269
2. Wool Textiles	271
3. Ready-Made Clothing	271
F. Miscellaneous Industries	272
1. Fruit and Vegetable Production	272
2. Alcohol and Beverage Production	274
3. Fish Resources	275
4. Wood and Wood Products	276
5. Tobacco	277
6. Miscellaneous Food Manufacture	277
7. Appendix	277

I. INTRODUCTION

In recent years, numerous studies have been made of various aspects of Iraqi agriculture. They have all emphasized the great and growing importance of Iraq's agricultural resources to the whole economy, and this study makes no attempt to cover the ground again. Its purpose is to examine Iraq's agricultural resources from the point of view of their industrial potentialities. An all-inclusive review of Iraq's agricultural resources is not presented, although pertinent statistical data have been included where they bear upon industrial opportunities. An important point to bear in mind is the high degree of interrelationship between various types of industrial development in the agricultural field. Benefits to one phase of agriculture can often lead to considerable results in other and apparently unrelated phases. For example, improvements in livestock raising would have a direct effect upon the dairy industry and the leather industry, and an indirect effect upon the shoe industry. Developments in the cultivation of dates, cotton, and rice could affect the future growth of the vegetable-oil industry, and consequently influence Iraq's future chemical industry. These and similar interrelationships that are of great importance to Iraq's future industrial development are examined in this report.

Certain agricultural industries have already made an excellent start, but others have not yet been established. This section of the report, therefore, falls into two main parts:

1. An examination of new industrial opportunities that can be based on Iraq's agricultural resources. Industrial plants to produce syrups and animal feed from dates; paper from reeds; and sugar from sugar beets to be grown in Iraq appear to be economically feasible. Recommendations are also made to initiate research programs that may lead to further industrial opportunities.
2. An examination of existing industries from the point of view of their improvement and growth. A large number of proposals are put forward concerning ways and means by which the tempo of both Government and private developments now taking place can be increased.

II. NEW INDUSTRIAL OPPORTUNITIES

In this section recommendations are made for the immediate establishment of the following new plants to process agricultural materials:

1. A paper mill to use reeds from the southern marshes.
2. A plant to make syrup (dibis) from dates.
3. A plant to make animal feed, primarily from dates.

In each case subsequent expansion will probably be possible either by increasing the plants' capacity or by establishing further units as experience is gained and markets grow. In a few years, it may be possible to expand the productive capacity of the paper mill and to add the production of invert sugar to the manufacture of syrup in the dibis plant. If animal feed is produced and marketed satisfactorily, it may be desirable to build two larger plants; and a further dibis plant, located in Basra, may eventually be justified.

As the decision to establish a sugar industry in Iraq was taken before work on the survey began, the recommendations offered have been limited to the problems that the new industry will face. The possibility of ultimately establishing a beet-sugar plant in Basra, based on winter beets, is, however, suggested.

A. DATE-PRODUCT INDUSTRIES

1. Introduction

Date production constitutes one of Iraq's most important economic activities and plays a major role in the agricultural economy. The date, however, is primarily an export crop and is subject to competition from other fruits and to fluctuations in market demand, which cause great hardship to farmers. The industry's fundamental problem is to improve marketing channels and procedures, but this lies somewhat outside the scope of this report. Nevertheless, attention is drawn to the report on date marketing presented to the Ministry of Economics by Professor S. Cabell Shull in July, 1954, in which very valuable suggestions were made. An improvement in marketing procedures would greatly reduce the date growers' problems, but substantial quantities of medium- and poor-quality dates would inevitably remain. The possibility of using dates for industrial purposes has, therefore, been examined. The proposals that follow are designed not only to further the Development Board's desire to expand industry in Iraq, but also to diversify and strengthen the demand for dates and thus bring relief to an important sector of Iraq's agriculture. The force of this consideration has led to a less rigorous application of the criteria of economic feasibility to potential industries using the date and some other agricultural commodities, than to most other industrial possibilities.

2. Recommendations

1. A date syrup (dibis) plant with a capacity of 20-30 tons per day should be

constructed, provided that:

(a) the plant can produce natural, clarified, and bleached syrup in any desired proportions. The services of an independent engineering consultant should be employed to examine the proposals for a plant of this kind made to the Date Association by a German firm. The consultants should be instructed to evaluate the proposal from the point of view both of operating costs and the practicability of the technical processes envisaged.

(b) the equipment is capable of conversion, during the date off-season, to the production of fruit and vegetable concentrates.

2. The services of an experienced market-research organization should be secured to investigate the possibilities of creating an export market for the three date-syrup products and for liquid sugar. This proposed investigation would form part of the comprehensive research program recommended below. In the light of the market information provided and the experience gained in the new factory, consideration should be given to the building, at a later date, of a second date-syrup factory in Basra.
3. Consideration of the proposal to manufacture invert sugar from dates should be deferred until a careful study has been made of the costs and technical processes available. If after the syrup factory has come into operation, the production of invert sugar is considered to be desirable, the additional equipment should be installed in the syrup plant.
4. A small-scale plant to produce animal-feed concentrates from dates and other food stuffs should be constructed. As date feed would be a new and untried product that might encounter serious marketing and production difficulties, more experience should be obtained before a plant of larger capacity is built.
5. A substantial sum should be set aside to finance a program of date research, both in Iraq and abroad. This program, into which the activities of the Date Association's new research laboratory should be integrated, should include pure and applied research. An important position in the applied research program should be given to market-research investigations, which experienced agencies would carry on in the European and Near Eastern markets for date feed, invert sugar, and the three types of natural syrup.
6. No further consideration should be given to increasing alcohol-producing capacity or at the moment to the production of chemicals from dates, as it is considered that reasonable chances of economic success are not present. If domestic industrial demand for alcohol increases in the future, existing distillery capacity should be utilized more fully before additional capacity is considered.

3. Date Syrup and Invert Sugar

a. Date Syrup

For some years a small factory in Baghdad has produced natural syrup from medium-quality dates for local consumption. The capacity of the plant is 6-8 tons per day, and the production season, which depends on a supply of fresh

dates, lasts for about 100 days, during which period about 600 tons of syrup is produced. The management of the plant is confident that at least three times this amount could have been sold in the 1954 season at the current price of 750 fils for a four-gallon tin. This indicates a strong demand for factory-made natural syrup, as it is in competition with a similar although inferior syrup, sold at 400 fils, made in a large number of small establishments throughout the country. The Date Association has estimated that approximately 16,000 tons of date syrup is consumed annually in Iraq, and it seems likely that some of this demand could be supplied by a new plant. Total domestic demand is likely to increase, and it is considered that a new factory should also be able to achieve a reduction in costs sufficient to secure export markets. At the moment, foreign markets are negligible, since the price is high; the C.I.F. price Europe of ID 43 per ton is thought to be about ID 7 more than European importers are prepared to pay. There is, however, little doubt that a potential foreign market exists.

A new plant, unlike the present one, should be able to produce both clarified and bleached syrup, for which it should also be possible to find substantial foreign markets. The clarified syrup might find an outlet as a table syrup and in confectionery manufacture. The bleached syrup, which is a water-white, odorless, and tasteless syrup, might be sold on world markets to mix with sugar liquor, in order to produce a heavy-body canning syrup. In addition to canning uses, markets may exist for this product in the field of sweet making. It does not have the excessive sweetness of sugar syrups and has the added advantage of bringing out the natural fruit flavors. It is therefore recommended that the services of an experienced market-research organization be employed to examine the possibility of establishing market outlets in foreign countries. Consideration should also be given to marketing these products under a recognized brand name. Although date syrup would primarily be sold on the domestic market, export possibilities should be fully investigated, as they may, together with the rising domestic demand that higher living standards in Iraq will bring, justify the building at a later date of a second syrup factory in Basra.

The Date Association has, it is understood, received proposals for the building of a plant of this capacity from a German concern. It is recommended that they be examined by an independent industrial consultant, from the point of view of both operating costs and the technical process recommended. Unfortunately, the proposals are not yet in a definitive form and estimates of operating costs are not available; nevertheless, the following comments are offered for consideration.

Costs in the proposed plant should be very substantially lower than those achieved in the present factory, as several special cost-reducing advantages will be added to the more general advantage of larger-scale operation. At the moment, the plant-utilization factor is very low, since dates in suitable condition are available only for about 100 days each year. The Date Association is of the opinion that clarified and bleached syrup can be produced from inferior dates, which are available for a much longer period, and that

their use would reduce overhead costs per unit of product by permitting a longer production season. As poor-quality dates are available at ID 3 to ID 5 a ton in comparison with ID 7 for the currently used medium-quality dates, an economy in raw material costs can also be obtained. When refrigeration facilities are expanded, the productive season might be even further extended.

Recently the syrup factory has produced quantities of fruit-juice concentrates. Production of a raisin concentrate has been raised from 400 to 700 bottles a day, and it is believed that production could be extended to citrus fruits, pomegranates, tomatoes, and perhaps tomato paste. This development seems to offer possibilities not only of improving the financial results of date-syrup manufacture by providing fuller plant utilization, but also of establishing a further industrial use for agricultural commodities. It is important that a new syrup plant possess this productive versatility.

It is impossible to say what the cost of production of date syrup should be, without detailed knowledge of the proposed plant and the relative quantities of the various possible products it would manufacture. It is, however, necessary that the general level of costs permit a substantial reduction in the selling price. An examination of the market for natural syrup indicates that if foreign markets are to be found, the export price C.I.F. Europe should not exceed ID 35 per ton. This would, on the basis of the present relationship between domestic-price and export-price quotations, give a retail price in Iraq of ID 30 per ton. Allowance should, of course, be made for adequate profit and capital charges when the price is calculated. At this figure, it should also be possible to obtain a considerable increase in domestic markets, as it represents a 20% reduction in the current price; substantially better results should, in fact, be possible.

Increased production of date syrup in a new plant should not appreciably reduce the markets available to the numerous small primitive plants now scattered throughout the country. Their production is largely destined for home consumption in the smaller towns and villages, and will still supply over 80% of the estimated present market for 16,000 tons of syrup. A rising rate of domestic consumption throughout the country is forecast as living standards increase, and the smaller plants will have ample opportunity to increase their production. The presence of a modern producing unit would serve as an example of good manufacturing and distributing practice, and the recommended plant can perform a very real service in helping to upgrade the entire industry.

b. Invert Sugar

There is no doubt that invert sugar, a type of liquid sugar, can be made from dates and that a domestic market exists for it. The Date Association's internal market survey, carried out on the use of sugar in confectionery making late in 1953, revealed the following average daily rate of consumption:

	Baghdad	Total-Iraq
	(kilograms per day)	
1. Sugar for sherbet manufacture	1500	
2. Sugar for ice-cream manufacture	1500	
3. Sugar for sugar solution	2000	
4. Sugar for biscuits and baking material	1000	
5. Other (Halwa)	500	
TOTAL . . .	6500	. . . 13,000[1]
6. Coca-Cola, Pepsi-cola, and other beverage manufacturers		6,000
7. Other sweet products (marmalade, etc.)		15,000
TOTAL		34,000

equivalent to approximately 10,000 tons per year.

1. Assumed by Date Association to be twice Baghdad's consumption

The Date Association assumes that a similar amount of sugar is consumed in households for domestic confectionery making, and that at least 80% of the total estimated domestic usage—approximately 16,000 tons a year—could be replaced by liquid sugar. This estimate is considered to be too high, as it will be very difficult to introduce liquid sugar into household consumption. Nevertheless, it is reasonable to assume that a potential domestic market of at least 8000 tons a year exists. Export possibilities should not be neglected, and a market-research investigation should be conducted.

The German proposals for the syrup plant include additional equipment for liquid manufacture from bleached syrup. They envisage an ion-exchange process that is technically complex; the equipment, however, is not an integral part of the syrup plant and could be added to it later.

In view of the technical complexity of the productive process recommended and the complete absence of cost data, it is recommended that the proposal to make liquid sugar from dates be deferred for further study. Investigation of costs and productive processes should, however, be undertaken with a view to eventually installing the necessary additional equipment in the new syrup plant where the raw material for liquid sugar production is to be manufactured.

4. Animal-Feed Concentrate

The manufacture of animal-feed concentrate from dates offers important advantages in addition to providing a further use for dates. The Iraqi

farmer would be offered an improved feed for his animals that would lead to an improvement in agricultural income by reducing costs and increasing meat supplies, and possibly also by increasing milk yields. It may be possible and desirable to develop export markets, but this is not certain and the immediate task should be to produce a product for domestic consumption and to promote its use in Iraq. To the extent that the traditional feeding stuffs are replaced by the date feed, their export to established markets can be increased. Nevertheless, the market-research program should include an investigation into the possible overseas outlets for the new feed and the marketing and transport problems involved.

Research into the production, composition, and use of date feed has been conducted at the Abu Ghraib experimental station, and very encouraging results have been obtained. In the report on The Use of Dates and Date Pits for Livestock Feeding, published by the Department of Animal Husbandry on June 15, 1955, an animal feed consisting of 53% barley, 34% dates, and 13% sesame-oil meal shows very attractive results when fed to sheep. The cost of 100 lb of gain in animal weight was ID 3.033, in comparison with ID 4.446 in the case of barley. Incomplete experiments revealed the possibility of substantially raising the proportion of dates contained in the feed, provided that an adequate amount of protein is added. The experiments with feeder calves and lactating cows have also shown promising results, and the report concludes that "it seems likely that the use of dates in livestock rations will find its largest market in the ration of dairy animals (cattle and buffalo) in Iraq."

Although further research work is necessary to determine the best composition of date feed for various purposes, it seems clear that the most serious problems to be solved will concern the technique of manufacture and the promotion of the new product. It is understood that certain technical difficulties in the mixing of the feed ingredients have been encountered in the production of experimental quantities at Abu Ghraib, and it is important that they be solved before a large-scale plant is constructed. A more serious difficulty will be to convince the farmer of the value of the new animal food. Sale at a very low, subsidized price might provide the necessary encouragement, but it is considered that this would be a premature step to take with an untried product still in the experimental stage. It is also considered that the productive problems that remain to be studied and the need to secure the very best results strongly favor the immediate setting up of a small-scale plant, with a capacity of 5-15 tons per day as an initial step toward the establishment of a new and important industry. In this way, production difficulties can be overcome before expensive machinery is purchased, and the initial use of the feed properly controlled by the Ministry of Agriculture. The use of the plant's output should be very carefully planned to ensure that farmers become aware of its value as quickly as possible. This can best be done by issuing it both to the Agricultural Research Stations for demonstration purposes and to selected farmers in as many parts of Iraq as possible. Agricultural Extension Service officials should carefully supervise its use and ensure that its value is made known to as many farmers as possible. Controlled use may be necessary as the composition

of the feed may from time to time be modified in the light of experience, thus making it desirable to modify the quantities and proportions of other feeding stuffs fed to the animals. It is important that the farmers see for themselves, at demonstration centers and on the farms of those who are willing to take part in the promotional campaign, that good results can be obtained. In addition, demonstration of the feed at the new UNICEF - Government Dairy should be planned.

It may be possible to secure export markets in the Middle East and perhaps in Europe, but possible storage, transport, and marketing difficulties are foreseen. German interests are said to be interested in importing either date feed or the dates themselves. This possible outlet should be further investigated and a market-research program undertaken, as a part of which an effort should be made to send trial quantities of the feed to countries where potential markets exist.

It is not envisaged that the recommended small-scale date plant could initially be a profitable venture, but it is recommended that as it would have important experimental and promotional work to do, it should be subsidized from funds set aside for date research. Although the prospect of success is bright and in a few years time it may be desirable to establish a large-scale date-feed industry in Iraq, it is considered that the recommended modest beginning is a prerequisite of success.

One of the important functions of the proposed plant would be to discover methods of animal-feed manufacture from dates that are suitable for commercial production. Unlike the research already done, which must of course continue, this type of work is unsuitable for a government department and in other countries is usually carried out by private firms. The businessman is usually skilled in keeping costs to a minimum and has more knowledge of the economical use of productive equipment than the government official or director of research. In addition, it is very economical of both time and cost to draw on the administrative and other services of an established business.

It is recommended, therefore, that one of the companies engaged in the manufacture of vegetable oil be invited to establish and run this plant under contract to the Government or the Date Association. The firm chosen should not be responsible either for selling the output, which should be handed to the Ministry of Agriculture, or for the purchase of dates. It should be paid a fee for its work and perhaps a small commission varying inversely with the level of operating costs. It is considered that an arrangement of this kind would offer the following advantages over and above the operating and administrative economy, to which reference has already been made:

1. Provide the company with a cheap supply of date stones from which vegetable oil could be extracted, and so establish a further industrial use for dates. It is understood that the date stones contain 8-9% vegetable oil, the extraction of which is economically attractive if a supply of cheap stones is assured.
2. Save transport costs on the sesame-oil meal that can be produced in the vegetable-oil plant and that constitutes an important ingredient of date

animal feed.

3. Provide a management and labor force that is experienced in the manufacture of somewhat similar products.

5. Date Alcohol

Alcohol of good quality can be, and at the moment is being made from dates in Iraq. Three distilleries in Baghdad produce a total of more than 1000 tons of 95% proof spirit each year—mainly for conversion into Arak. Average costs of production appear to be very high, to a large extent as a result of the low plant-utilization factor and the high cost of raw materials. There is evidence to suggest that production costs are in the neighborhood of 280 fils per Imperial gallon, at least in the older plants. Fuller plant utilization would substantially reduce the figure, but there is little possibility of reducing costs sufficiently to obtain oversea markets.

An up-to-date, 1000-ton-per-year plant purchasing dates at ID 5-ID 10 per ton and working at full capacity might succeed in producing alcohol at from 175-200 fils per gallon, including overhead and capital charges. This compares with the American fob price, which at the moment is about 170 fils per gallon. The cost of alcohol produced in Iraq, therefore, would probably be somewhat higher than the American price, which included the manufacturer's profit. For this reason, it is believed that finding world markets of sufficient size to justify construction of additional alcohol-producing capacity would be difficult, if not impossible.

Further, the world market situation is such that export possibilities are not encouraging. While a thorough analysis of world markets and new industrial capacities has not been made, certain general characteristics make it appear highly unlikely that date alcohol, produced by fermentation, could obtain a place in world markets. U.S. production of industrial alcohol in 1954 amounted to 2600 million lb. This included 240 million lb of ethanol produced by fermentation of sugar-containing raw materials, 1360 million lb of ethanol of petrochemical derivation, and 1000 lb of isopropyl alcohol, also of petrochemical derivation. All three products are, to a large extent, interchangeable in industrial uses, and hence have closely related and similar market prices. Of this volume of U.S. production, only very small quantities, of the order of 1%, are exported. For many years, exports have been steadily declining as the result of the increase in foreign self-sufficiency, and it is thought that the export market for American alcohol will completely disappear in a few years.

It is known that substantial isopropyl alcohol capacity is being built elsewhere in the world, particularly in Europe. The amount of this additional capacity is not yet known, but it is certain to be sufficient for European domestic use and will probably eliminate the possibility of export to Europe. At the same time, substantial European supplies for world markets may become available. An investigation into increasing Eastern markets might reveal somewhat brighter prospects, but at present, their total requirements are comparatively small.

Further study of the U.S. alcohol industry shows that there is consid-

erable surplus capacity. It is estimated that the total demand for fermentation and petrochemical ethanol will be 1800 million lb by 1955, and that production capacity will be 2250 million lb. This surplus capacity consists almost entirely of fermentation-plant capacity that has become uneconomical as a result of the high cost of raw materials, which are being increasingly used for other purposes.

The increasing availability of low-cost petrochemical raw materials has steadily driven the manufacturers of fermentation alcohol either out of production or into a situation where profits are very low. Alcohol derived from agricultural products has always been considered to be an expensive chemical material, and is therefore avoided wherever possible. In recent years, the petrochemical industry has succeeded in producing large quantities of oxygenated hydrocarbons, which include ethyl alcohol and more notably isopropyl alcohol, which can be substituted for ethyl alcohol in almost every use. Petroleum-derived ethyl alcohol is fairly expensive; its cost approximates that of the agricultural-derived product. On the other hand, isopropyl alcohol is considerably cheaper, with the result that world ethyl alcohol prices are pegged to the isopropyl alcohol price. Current prices of these materials in the United States are approximately 170 fils per Imperial gallon—which leaves a very narrow profit margin for the fermentation industry, particularly where heavy capital charges are involved (as they would be in the case of a new plant). It is clear that excess American producing capacity and currently rising European output potential provide a strong deterrent to the construction of further plants to produce alcohol from dates in Iraq, where the considerable distances from the major markets provide further difficulties. It cannot, therefore, be recommended that an attempt be made to produce alcohol for foreign markets.

On the other hand, domestic uses for alcohol may increase. At the moment, they are very limited, apart from Arak, and they do not seem likely to grow substantially in the foreseeable future. Additional demand could, however, be met from the existing plants. The cost of production of this additional output would not greatly exceed the cost of raw materials and manufacturing costs, since the capital and overhead charges are already being met at the current rate of output. It would be possible, by using existing plants more intensively and by adopting a two- and at times a three-shift working system, to obtain this additional production. In this way, a use for 7000 or 8000 tons of surplus dates would be found. On the assumption that they could be purchased at ID 5-10 per ton, the cost of production should be somewhat less than the landed price of alcohol in Basra. It is therefore recommended that if increased markets for alcohol arise, the existing distilleries be used as the source of supply for industrial alcohol. A new plant should not be considered until present capacity is more fully utilized.

If major alcohol-consuming operations are established in Iraq in the future, alcohol, as an important industrial raw material, should not be required to bear a heavy excise duty. Such duties would inflate the price of products manufactured for local consumption. It is therefore recommended that exemption from excise duty be given to alcohol used

for future industrial purposes. The method employed to give relief to the perfumery industry—by which a drawback refund is given—would not be satisfactory, since it would absorb a considerable amount of working capital. This adds to costs of production, in the form of interest charges, and reduces the availability of capital to other industries.

6. Date-Research Program

a. Research Program

The date industry is in great need of additional market outlets. A well-planned and comprehensive program of both technical and market research aimed at discovering new products and new market outlets does not exist. It is recommended, therefore, that such a program be formulated and put into effect immediately, since fragmentary research is of comparatively small value and the coordination of all efforts is most important to ensure good results.

Responsibility for planning, authorizing, and putting into effect the results of research clearly rests with the Date Association. However, the importance of this work to the future of the date industry and consequently to the economy of Iraq indicates that financial and other aid should be granted to the Date Association by the Development Board.

Particular research projects devoted to expanding or establishing industries utilizing dates are outlined in the following sections, and a summary indicating the appropriate type of research agency is provided.

b. Date-Syrup Research

If the German proposals satisfy the criteria set out in the section on date syrup, it is recommended that a foreign market-research firm be employed to make a thorough quantitative survey of European confectionery, canning, and other markets for date syrups. It should also be required to introduce samples and establish commercial contacts.

Particular attention should be paid to the export possibilities of clarified and bleached syrups, for the following reasons:

1. They have wider markets than natural syrup.
2. They can be produced from poorer-quality dates, which are available for longer periods of the year.
3. Demand may eventually justify the erection of a second plant in Basra.

This study should be begun as soon as export prices for all three syrups—on the basis of costs in the new plant—have been estimated, and good-quality samples are available. It is difficult to estimate the exact cost of such a study, but it should not exceed ID 10,000.

Additional research of a technical nature may eventually be performed by the Date Association laboratory, although it is believed that the greatest initial contribution of the laboratory will be through aiding the new plant in such matters as quality control and product improvement. The need for further technical research to develop new forms of date syrup cannot be determined now, but such research should certainly be considered after the results of the market

survey are analyzed and after the new plant is in successful operation.

c. Invert Sugar

Iraqi markets would exist for invert sugar, if it were available at a competitive price. Equipment to produce this product, using bleached syrup as a raw material, could be added to the proposed date-syrup plant, and it has been recommended that the decision to install such equipment be deferred pending an investigation of costs and alternate production processes. In addition, export markets may also exist for this product. In view of the substantial overlapping of markets for this product and those for date syrups (confectionery, canning, bakery products, beverages, and perhaps others), it is recommended that a study of European markets for this product be carried out simultaneously with that for date syrups. Such a study should determine not only the quantitative demand for the product but also the price at which the product would be acceptable. The same firm should be retained to do both studies and it is estimated that an additional ID 3000 would be required. The results of this study will be of particular value in helping to determine eventual capacity and necessary price levels. Again, it may well be that substantial additional capacity will be required and should be included in additional plant construction or expansion plans.

Additional technical research on sugar will be discussed in the section on basic research.

d. Fruit Juice Concentrates

The present date-syrup plant has recently begun production of a juice concentrate. It is believed that this line of business can be profitably expanded in the future. In view, however, of Iraq's shortage of suitable fruits and the experimental nature of the development, it is considered that large-scale research in this field be deferred until suitable agricultural commodities are in greater supply and until local markets are more firmly established. What is needed immediately is a limited development program to determine concentrate-production possibilities for other fruits—citrus, pomegranates, tomatoes, and tomato paste. This program, which is of an application rather than a research nature, can best be carried out by technical personnel of the new plant together, perhaps, with the new Date Association laboratory. Eventually, as a line of products is developed and the Iraqi market expanded, export possibilities should be considered. At that time market research may be authorized, or a more limited market investigation may be made through European date-syrup importers.

e. Animal Feeds

Immediate research needs in this field include further work to discover newer and perhaps better feed compositions for cattle and sheep. Guaranteed-formula feeds should be developed that can be purchased by the farmer and mixed in certain proportions, with the expectation of definite results in

terms of weight or butterfat gain. In addition, research is needed to establish correct manufacturing methods, since the present experimental method is not suited to larger-scale production.

Longer-range needs include the development of additional feeds for water buffalo and poultry. Furthermore, a market study is needed to obtain information on the nature and extent of European and other markets for animal feed and the conditions under which date feed would be acceptable.

The search for improved feeds is now being carried on both at Abu Ghraib and in German laboratories, with the latter conducting experiments on nutritional and digestive values, feeding results, and proper methods of manufacture. The Abu Ghraib program should be continued until results are certain enough to justify the production of fixed-composition feeds in the proposed small-scale plant. However, in no case should such results be taken as final until they are compared with results of the German experiments. It is most important that these two research projects be coordinated. For the future, it is believed that long-range development work, specifically that on water buffalo and poultry feeds, be conducted at Abu Ghraib, although the German laboratory should certainly be used if experience at Abu Ghraib indicates its need.

Development of correct manufacturing methods should be assigned to the consulting firm entrusted with the construction of the small-scale feed plant. However, this firm should be required to take into account the findings of the German laboratory in this matter. The small-scale plant will be used, among other purposes, as a testing ground for these methods. If they prove satisfactory they should be used as a basis for the design of a larger plant; if not, further research on manufacturing methods should be assigned to the consulting firm.

A market study is needed to determine potential European users of date animal feed. However, such a study is not required immediately. It should be planned and carried out by a competent market-research organization when:

1. The small-scale plant is in production and a line of tested products is available.
2. The testing program, to be planned and administered by the Department of Agriculture, possibly through the Agricultural Extension Service, has begun to show favorable results.
3. Results of the German experiments are known and German interest in purchasing feed has been determined.

Results of the market-research program may have a direct bearing on the future capacity of a large-scale plant and may indicate that an additional large plant should be constructed for export purposes. As a result of the special nature of a project of this type, involving as it does the setting up of extensive feeding tests in various countries and a measuring of the competition to be encountered from indigenous animal feeds, it should be considered as somewhat larger in scope and more complex than the market studies on syrups and invert sugar. It is estimated that the cost of such a program, thoroughly carried out, would be not more than ID 20,000.

f. Basic Research

In addition to the specific projects mentioned above, there is a definite need to commission immediately a long-term, comprehensive research program that would be directed not toward deriving specific products from dates, but toward adding to scientific knowledge concerning the structure, composition, and possible derivatives of the date at all stages of growth. Immediate results from such a project should not be anticipated, nor should any specific long-term results be expected. Nevertheless, the project should eventually result in the development of marketable products. There is sufficient precedent in the results of numerous similar research programs conducted on agricultural products in other countries, to indicate that this may well be the case.

As a supplement to this pure-research program, applied research should be conducted to investigate the following possibilities:

1. The separation of special sugar products from date invert sugar. This sugar is known to have a natural composition of 50% glucose and 50% fructose, and it may be commercially possible to isolate them so that their production could eventually take place as a subsidiary process to invert-sugar production. Glucose and fructose have special and separate markets and a further market investigation will be necessary.
2. The production of sucrose (ordinary domestic sugar). Previous tests show that there is a period in the date's growth (Khalal, or yellow stage of ripening) at which the date contains from 20%-30% sucrose. If its extraction becomes economically feasible, it will provide an opportunity for the large-scale use of dates prior to their becoming surplus. Further, examination should be made of the possibility of using beet-sugar-extraction equipment to process dates for the extraction of sucrose.
3. The production of starch. It is known that dates contain a high percentage of starch at a certain stage in their growth. Investigation should be made to determine whether its extraction is commercially feasible and whether it should be used in that form or stored and converted to sugar in the new beet-sugar plant.
4. The production of improved vegetable oils and other products from date pits. It is known that a satisfactory vegetable oil can be produced, but the search for further products should be continued.
5. The production of chemical products. It is difficult to comment on these possibilities because there is a complete lack of relevant fundamental knowledge. Clearly the research program should include research for possible chemical products.

Immediate discussion should be undertaken with various well-qualified foreign research laboratories concerning the setting up of this basic-research program. The work should be organized by means of a long-term contract, subject to periodic review and, an annual budget of approximately ID 20,000 should be considered. An important part of the program would be the assignment of Iraqi scientists to the chosen research laboratory for training and liaison purposes. These men, upon return to Iraq, should be assigned to the new Date Association laboratory, where they would be of substantial aid in setting up

basic research in Iraq and in carrying on the promising lines of research that may begin in foreign laboratories. In addition, the broad research experience gained by these men may find eventual application in organizing and carrying out research projects on other agricultural products.

It is understood that the new laboratory will have a staff of three to five, and may work initially on both pure and applied research as well as on such practical matters as the development of improved insecticides and fumigation methods. In view of the newness and relative inexperience of this laboratory, it is recommended that much of its initial work be devoted to:

1. Date-syrup quality control and product improvement.
2. Development and improvement of fruit- and vegetable-juice concentrates.
3. Technical liaison between foreign laboratories and the Date Association.
4. Providing technical aid to the new animal-feed plant, if this is considered necessary.
5. Continuing work on insecticides and fungicides.

It is envisaged that, as results begin to emerge from the foreign laboratory research program and as Iraqi scientists return to Iraq from the foreign laboratory, basic research designed to carry forward foreign work may be carried on. However, this should not be attempted initially.

g. Additional Market Research

Need for continuing liaison with various market-research organizations is foreseen if additional markets for dates are to be developed. In addition to the specific market-research projects listed above, additional market research may be required, for the following reasons:

1. Research laboratory results will be of little value unless markets are found for newly developed products, and the market conditions that the product must satisfy are determined. Additional market research should be commissioned periodically in the light of laboratory findings.
2. Expansion of existing or newly founded date-product industries may be difficult unless a periodic determination of market needs and conditions of demand in foreign countries is made.
3. As a result of these investigations, demand for new date products may be found. Such discoveries, in turn, may stimulate further technical research and influence production.

It is also believed that little market research has been done to determine other edible uses for dates. Cooperation of exporters (who hold exclusive rights to various market areas) should be obtained, and they should be induced to share the cost of making special surveys, to find possible uses for dates for such products as:

1. Substitution of dates for figs in fig newtons.
2. Cakes, breads, and other bakery items.
3. Date sweets and date nut bars.
4. Caramel flavoring produced from date syrup.
5. Ice cream, mince meat, cheese, date, and milk combinations.

Since the exporters have firsthand market knowledge of various areas

and will be the agency through which dates for such uses will pass, their co-operation and opinions on the value of special surveys is considered essential.

h. Administration

Proper coordination of a far-reaching research program is vital to its success. It is recommended that a Research Committee be set up within the Date Association to carry out the following functions:

1. Negotiate with foreign laboratories and research organizations and review the results of commissioned research.
2. Coordinate research activities carried on in the fields of syrup and sugar, and make recommendations to the Date Association and the Development Board to:
   a. Extend research.
   b. Establish new or expand present plant capacity.
3. Maintain liaison with the new date-feed plant and its administration; recommend both further research and/or erection of a larger plant when justified by research results.
4. Supervise the activities of the Date Association laboratory, recommending alterations and expansions in its program.
5. Ensure that market-research results are made known and acted upon.
6. Plan the entire research program on an annual basis, based on research requests received and its own recommendations; request and administer annual research appropriations from the Development Board.
7. Contact date exporters regarding possible additional edible uses for dates, examine their needs for market research, and help set up joint programs.

As indicated in the Table 67, portions of the necessary research can be paid for by the regular budgets of existing institutions. The remaining projects should be financed as follows:

1. An annual appropriation for the basic research program, plus a contingency allocation to be spent only for additional market research, if the latter is found necessary.
2. Special appropriations for the specific market-research projects.
3. By including the development of proper feed-manufacturing methods in the tender for construction of the small-scale plant.

TABLE 67

SUMMARY OF RESEARCH NEEDS

Necessary Research	Recommended Method or Agency	Timing	Estimated Cost
Examination of European markets for date syrups	Foreign market-research firm	As soon as export prices are estimated and samples are available	Up to ID 10,000
Examination of European markets for invert sugar	Foreign market-research firm	Simultaneously with date-syrup study	Up to ID 3,000
Study of European markets for animal feed	Foreign market-research firm	As soon as testing samples are available and results in Iraq and Germany are known	Up to ID 20,000
Additional market research, as may be required for juice concentrates and other edible uses for dates, and as indicated by results of other work	Foreign market-research firm	As required	Annual budget of ID 4,000, to be used as required
Basic-research program including specific research on special sugar products, sucrose, starch, date-pit products and chemicals, and training of Iraqi scientists	Foreign research laboratory, eventually by Date Association laboratory	Immediately	Annual Budget of ID 20,000, subject to periodic review
Work on insecticides and fungicides, liaison with foreign laboratories, special assignments from date industries, and eventual development of basic-research program	Date Association laboratory	When facilities are available	Covered by laboratory budget
Date-syrup quality control and product improvement	Date Association laboratory	Upon completion of new syrup plant	Part of laboratory budget
Development of additional fruit-juice concentrates	New syrup plant facilities and Date Association laboratory	As soon as facilities are available	Part of laboratory budget
Continuation of Abu Ghraib and German animal-feed experiments	Abu Ghraib and German laboratory	Immediately	Continue present allocations
Development of poultry and buffalo feeds	Abu Ghraib	Schedule immediately	Part of Abu Ghraib budget
Development of proper feed-manufacturing methods	Consulting engineering firm that will build plant	Immediately, taking into account German findings	As part of tender

B. PRODUCTION OF PULP AND PAPER IN IRAQ

1. Introduction

An investigation into the economic feasibility of establishing a pulp and paper industry in Iraq using reeds as a raw material has been conducted. Preliminary work had been conducted by consultants engaged by both the Industrial Bank and a local company. Further intensive investigation has been made in the United States for this survey. Discussions have taken place with paper-testing laboratories familiar with reeds of the type grown in Iraq, and with companies experienced in building pulp and paper mills that use such reeds. Cost estimates have been prepared to serve as a guide in future planning and to establish firmly the economic feasibility.

The general conclusion is that it is feasible to establish in Iraq a pulp and paper industry based on "qassab" reeds (phragmites communis), supplemented by rice straw and imported chemical pulp, using a soda pulping process. The mill should be a small one, capable of expansion as experience is gained and as local markets accept the domestically manufactured products. Considerable field work, in particular a survey of reed availability, is required, but plans should proceed at once for the establishment of a pulp and paper industry.

2. Recommendations

1. A pulp and paper mill with a nominal capacity of 15 tons per day should be established in Iraq using "qassab" reeds (phragmites communis) as the basic raw material, supplemented by rice straw and imported chemical pulp, using the soda process of pulp manufacture. This recommendation is contingent upon a survey to confirm that a minimum of 9000 tons of air-dry "qassab" reeds are available annually at a cost of about ID 2 to ID 3 per metric ton. Funds should be made available through the Industrial Bank for the establishment of the mill, provided that plans are in general agreement with the points outlined in this report.
2. Funds should be made available to the Ministry of Agriculture or other appropriate agency, to make a survey of the availability of "qassab" reeds in the Basra area.
3. The pulp and paper mill should be located in the Basra area because of the proximity of the reed supply. Actual site location, which will be dependent upon water and waste-disposal facilities as well as on the possibilities of future expansion, will require a field study by paper-mill specialists.
4. Long-term agreements for the supply of reeds and straw should be made before the construction of the mill is begun, to prevent a sudden rise in costs of raw material.
5. The pulp and paper mill project should be handled by one contractor responsible for turning over to the proprietors a complete operating mill, with capable personnel hired from abroad and with the entire local labor force adequately trained. The contractor should be prepared to guarantee the quality and quantity of production and to operate the plant for a specified

period of time, if required.

6. "Birdi" reeds (typha augustata) should not be considered as a paper raw material at this time, but further work on evaluating their suitability should be carried on once a pulp and paper mill has been established. These reeds, as well as "qassab," may eventually serve as a raw material for hardboard manufacture, but further tests are necessary.

3. Market for Paper and Paper Products

a. Present Market

Iraq is currently importing over 13,000 metric tons per year of paper and paper products, valued at about ID 1.2 million. Per capita consumption is 5.5 lb, which compares with 9.5 lb for Egypt, 100 lb for Great Britain, and about 300 lb for the United States. Table 68 shows the rapid increase that has recently taken place in paper imports, and Table 69 indicates the types and quantities involved.

TABLE 68
IRAQ IMPORTS OF PAPER AND PAPER PRODUCTS

Year	Metric Tons	Value (ID)[1]
1950	5,434	472,382
1951	5,486	758,124
1952	8,611	1,336,617
1953	9,558	884,066
1954	13,296	1,215,672

1. Values shown are C.I.F. Basra, plus landing charges.
Source: Figures from Department of Customs and Excise.

b. Potential Market

The use of paper and paper products will undoubtedly continue to grow with the growth of the economy during the next five years, and this growth can be further stimulated by the establishment of a local source of paper of adequate quality and reasonable price. An extrapolation of the figures for the period 1950 through 1954 indicates that by 1960 the market will be about 25,000 tons, or about 9.0 lb per capita, assuming a population of 6.1 million. Extrapolation of the figures of Table 69 and those of 1950 through 1953 indicates that the 1960 potential market for paper and paper products, in terms of types and quantities, will be about as shown in Table 70.

Not all the imported products lend themselves to immediate production by a local paper mill, particularly as the mill must operate on reeds. In considering a paper mill for Iraq, only those products most easily made on a Fourdrinier-type machine have been considered as suitable for initial mill production. The output of the mill could be readily increased after experience had been gained.

TABLE 69

TYPES AND QUANTITIES OF 1954 IMPORTS OF PAPER AND PAPER PRODUCTS

TYPE	METRIC TONS	
Cardboard		
Common Cardboard	1,868	
Cardboard for building purposes, including fiberboard	1,895	
Bobbins and tubes of cardboard.	161	
Wares of Cardboard, such as papier-mâché	156	
Other	273	4,353
Paper in Rolls, Not Made Up		
Common packing paper	1,156[1]	
Kraft Paper for cement bags	500[1]	
Newsprint	1,016	
Other	585	3,257
Paper in Rolls or Sheets, Made up or Cut for Special Purposes		
Glazed, ruled, lined, or checkered	1,057	
Oiled or waxed paper or cellophane	196	
Indigo or carbon paper	53	
Other, including writing and printing paper	2,567	3,873
Boxboard		
Fashioned for packages for dates, cigarettes, etc.	350	
Boxes, cases of cardboard	538	888
Blotting Board and Filter Paper	2	2
Cigarette Paper	153	153
Paper Bags, Sacks, etc.	770	770
TOTAL		13,296

1. Estimated, since total of 1656 metric tons given for packing paper includes Kraft paper for cement bags.
Source: Department of Customs and Excise.

Specific sections of the market will best be supplied by imports, particularly specialty items, such as cigarette, filter, blotting, oiled, and waxed papers, and notebooks and special boxes. Reeds are not suitable for the manufacture of newsprint.

4. Resources

a. Reeds

The principal ingredient for paper manufacture is a cellulose-containing material, from which it is possible to manufacture a pulp that can then be converted into paper by further treatment. The usual source of cellulose for

TABLE 70

ESTIMATED 1960 MARKET FOR PAPER AND PAPER PRODUCTS

TYPE	METRIC TONS	
Cardboard		
Common cardboard	3,500	
Cardboard for building purposes, including fiberboard	3,600	
Bobbins and tubes of cardboard	300	
Wares of cardboard, such as papier-mâché	300	
Other	500	8,200
Paper in Rolls, Not Made Up		
Common packing paper	2,000	
Kraft paper for cement bags	1,000[1]	
Newsprint	1,800	
Other	1,200	6,000
Paper in Rolls or Sheets, Made up or Cut for Special Purposes		
Glazed, lined, ruled, or checkered	1,800	
Oiled or waxed paper or cellophane	400	
Indigo or carbon paper	100	
Other, including writing and printing paper	3,300	6,600
Boxboard		
Fashioned for packages for dates, cigarettes, etc.	800	
Boxes, cases of cardboard	1,200	2,000
Blotting Board and Filter Paper	10	10
Cigarette Paper	390	390
Paper Bags, Sacks, etc.	1,800	1,800
TOTAL		25,000

1. This category may grow much more rapidly, because of proposed cement plants.

papermaking is wood, but Iraq's forests are at present inadequate and it will be many years before a supply is available. Iraq does, however, have in the reeds that grow in southern Iraq near Basra a cellulose-containing material considered to be entirely satisfactory for paper manufacture. There are two principal types of reeds growing there: "qassab" (phragmites communis) and "birdi" (typha augustata). Of the two reeds, considerable test work has been conducted on "qassab," but only one series of tests is known to have been conducted on "birdi." A number of consulting organizations engaged by the Industrial Bank have used "qassab" to make paper samples that appear to be quite satisfactory. In addition, groups in the United States who have had occasion to investigate "qassab" as a raw material for paper have found that paper made from it should be equal to or better than most of Iraq's present imported

papers, particularly when the reed is blended with rice straw or imported pulp. The one series of tests conducted on "birdi" indicates that further investigational work is required, but it appears that future work may well indicate that the "birdi" can be blended with "qassab," thus increasing the available reed supply.

It is extremely difficult to obtain firm estimates of the availability of reeds. In a report by the Food and Agricultural Organization of the United Nations, it was estimated that enough "qassab" reeds exist to supply a paper mill with an annual capacity of 12,000 tons. Another estimate indicates that there are a minimum of 1000 square kilometers containing one-half kilogram of dry "birdi" per square meter (or 500,000 metric tons). The amount of "qassab" is reported by another observer to be greater than the amount of "birdi."

Visual observation of the reed area near Basra indicates that there is probably an adequate supply, but whether the area is primarily "qassab" or "birdi" is not definitely known. It will be necessary before the paper mill is established to make a detailed survey of the reed area to discover whether enough reeds exist to provide at least 9000 metric tons per year of air-dry "qassab" reeds. Additional quantities would be required to permit later expansion. In the survey, samples of reeds should be cut over a wide area and they should be air-dried and weighed to determine the average weight per square meter. The samples must be so taken as to be representative of the area under survey.

Further investigation will be required to discover whether adequate quantities of reeds can be collected during the six- or seven-month collection period, which begins in August or September. Reeds in excess of the normal monthly requirements of the mill will be stored at the mill for use during the noncollection period. The reeds must be gathered, bundled, and transported to the plant site near Basra. The estimated cost of gathering and delivering the reeds is ID 2 to ID 3 per metric ton of air-dry reeds, but further investigation of these costs will be necessary. Arrangements should be made for long-term agreements on the delivery methods and price, to prevent a sudden rise in price once the mill has started operation.

According to information received from the Agricultural Station, it will also be necessary to control reed cultivation. To ensure continued growth of the reeds, it will be necessary to leave some areas uncut, probably 10 square meters uncut for each square kilometer cut. This will permit seeding of the cut areas by the uncut areas.

b. Rice Straw

It will be desirable to blend rice straw with the reeds to improve the quality of the paper. Although it is not necessary, its addition results in a finer paper. Rice straw is now used extensively elsewhere in the world and its utility has been amply varified. Requirements would be 3000 to 5000 tons per year, delivered to the paper mill in bales. This amount should be readily obtainable in view of Iraq's current production of 150,000 to 160,000 tons of rice per year. Rice is grown in large amounts in U'mara, fairly close

to Basra. Arrangements would have to be made to have the rice straw cut and baled according to specifications and to conclude long-term agreements for the supply of the long-fibered rice required. An arrangement that has proved satisfactory elsewhere is to have the paper company use its own baler and crew to prepare the straw as it is purchased from farmers. A price of ID 3 per ton delivered to the mill has been assumed for purposes of the cost calculations for rice straw. Current price is ID 2 per metric ton, based on available figures.

In the event that rice straw is not available, wheat or barley straw could be used in its place. Barley is grown just north of the rice-growing area and would offer a good alternative. Wheat, on the other hand, is grown principally in the north, and transportation problems and costs would probably prevent its economical use.

c. Imported Chemical Pulp

In order to produce strong, unbleached papers and white writing and printing paper, it will be necessary to import chemical pulp of both unbleached and bleached varieties. This type of pulp is available on world markets, particularly from Sweden and Finland. The use of bleached sulfite pulp to make white writing and printing papers is preferred to the bleaching of the reed pulp, because of the relatively small market for these types of paper and the high cost of carrying out bleaching operations on a small scale. Growth of the printing and writing paper market may warrant installation of bleaching facilities at a later date.

d. Waste Paper

The blending of waste paper with reeds and straw will help improve the quality of the finished paper. It is difficult to estimate the amount of waste paper available in Iraq, but it should be possible to collect 4-5 tons per day. Facilities for collection, grading, and storage will have to be provided.

e. Caustic Soda

About 1500 metric tons of caustic soda will be required annually. Until it is available from domestic producers, it will have to be imported.

f. Other Ingredients

Other materials that are added to the pulp to obtain desired paper properties are alum, clay filler, and rosin size. These ingredients, required in small amounts (125 to 150 tons annually), will have to be imported but are readily obtainable.

5. Manufacture of Paper From Reeds

There are numerous processes available for paper manufacture, but the

method discussed here is considered to be the best one for producing paper from reeds of the type available in Iraq. This process has been selected as a result of discussions with organizations experienced in paper manufacture from reed materials and also familiar with the tests carried out on "qassab" reeds.

There are two distinct phases in the conversion of reeds to paper:

1. The manufacture of pulp from the reeds (and cereal straw mixed in).
2. The conversion of the pulp to paper.

1. Pulp Manufacture

The reeds in bundles and the straw in bales are received from the supplying area and either put into storage (depending upon the season and rate of supply) or sent directly to the pulp mill. After cutting and screening, the reeds and straw are mixed with the chemical "cooking" liquor, consisting of caustic soda and water of predetermined concentration. The use of the caustic soda "cooking" liquor (the soda process) has been found to yield satisfactory results with reeds of the "qassab" type, and has been recommended rather than the other well-known processes, such as sulfate and sulfite and any of the newer, specially modified processes, although a blending of a certain amount of sodium sulfide may be found to be desirable as experience is gained.

The mixing of the reeds and/or straw with the "cooking" liquor is carried out under specified conditions of time, temperature, and pressure. This part of the process, called digestion, is conducted in an apparatus called a spherical rotary digester. After the period of digestion is complete, the "cooked" reeds or straw have excess liquid removed, after which the consistency of the pulp is regulated, the pulp is washed, and the undigested portions of the reeds are removed. After being thickened further by liquid removal, the pulp is sent to storage for mixing with imported chemical pulp (or rice-straw pulp if rice straw is handled separately, as it might be).

The imported chemical pulp, which is received in bales, is treated in an apparatus called a Hydrapulper, wherein the pulp is brought to the proper consistency before being sent to storage. The same apparatus is equipped to handle the rice straw separately if desired. In this latter case, the rice straw would, after treatment in the Hydrapulper, be mixed with the reed pulp after the reeds had been digested.

2. Conversion of Pulp to Paper

The various pulps described above (reed, rice straw, and imported chemical pulp) are blended as required, depending upon the type of paper to be manufactured. At the time of blending, various ingredients are added to the pulp to prepare the pulp fibers to yield the desired quality of paper. A filler such as clay is added to occupy the spaces between fibers, and to obtain a paper having a smoother surface, a more brilliant whiteness (in the case of bleached papers), and a better printability. Rosin sizing is added to impart to the finished paper a resistance to penetration by liquids, when such a property is desired. Alum is added to produce coagulation of the sizing and to

produce the desired coating of the fibers. Coloring might also be added.

After the various ingredients have been added, the pulp passes through what is known as a jordan machine, a special machine with rotary and stationary bars, between which the pulp fibers pass, resulting in a uniform, well-mixed pulp for the papermaking machine. After the pulp passes through the Jordan machine, its consistency is adjusted and it is screened to remove any dirt or impurities and to obtain a better separation of the fibers, so that when it is delivered to the paper machine, better felting of the fibers results.

The machines used for actual formation of the sheet are of two general types: the Fourdrinier machine and the cylinder machine. The Fourdrinier machine is the type recommended as the first machine to be installed; a cylinder machine may be added to it at a later date. In the operation of the Fourdrinier machine, a dilute solution of pulp in water flows onto a moving, endless, bronze-wire screen. The pulp fibers remain on the screen while a great portion of the water drains through. As the screen moves along, it has a sidewise shaking motion which serves to orient some of the fibers and give better felting action and more strength to the sheet. While still on the screen, the paper passes over suction boxes to remove water and under a roll that smoothes the top of the sheet. Rubber straps travel along the sides of the screen at the same speed and thus serve to form the edges of the paper.

The paper then passes over a series of steam-heated drying rolls to remove the remaining water. Heavier calender rolls (a series of smooth, heavy, steel rolls) impart the final surface to the paper before it is wound onto a reel. The paper is then trimmed and cut.

The cylinder machine is used for the manufacture of heavy paper, cardboard, or nonuniform paper. It enables several layers to be united into one heavy sheet. Pulp is fed to the cylinder machine by a series of vats. A wire-wound cylinder dips into each vat, and as the water drains into the interior of the cylinder, the dewatered pulp forms a sheet on the surface of the cylinder. The sheet is discharged from the cylinder by means of an endless woolen felt or blanket, which carries it through a series of rolls that remove excess water and form a composite sheet. After the pressing operation, the sheet passes over steam-heated drying cylinders and calender rolls, and onto a reel as in the case of the Fourdrinier machine.

6. Costs and Investment

Estimates of the cost of constructing a paper mill in Iraq using reeds as the basic raw material have been prepared after discussion with groups in the United States familiar with the properties of "qassab" reeds, and with organizations experienced in paper manufacture from reed materials. The costs prepared are conservative, but should provide figures on which future planning can be based. The data discussed below and shown in detail in Tables 71 through 74 indicate that paper can be economically produced in Iraq using "qassab" reeds as a raw material, supplemented by rice straw and imported chemical pulp.

Costs were prepared for a pulp and paper mill to produce 4500 metric tons of assorted paper per year. Only unbleached pulp will be made from the

reeds, with imported sulfite pulp serving as the raw material for white writing and printing papers. The output of a paper mill of this size would be well below the total potential market, but the selection of the smaller capacity is based on a consideration of the types of paper most easily made, the variety of products a mill should make, and the need for a new paper mill to gain experience in paper manufacture from reeds before expanding to provide for a larger portion of the market.

The following is a rough guide to the types and quantities of paper that should be manufactured at first, although final proportions can be determined when the mill is established:

Type	Annual Metric Tons	Raw Materials
1. White printing & writing papers	500 - 1,000	Imported sulfite pulp
2. Light wrapping paper and miscellaneous unbleached paper, light brown in color	500	Qassab and rice straw, with up to 25% imported Kraft pulp as required, selected waste paper added
3. Boxboards for date & cigarette boxes; light-brown papers with good folding strength	1,500	Qassab and rice straw
4. Stiffer cardboards for miscellaneous use	500	Qassab, low-grade waste papers; possible birdi in the future.
5. Strong, heavier wrapping paper for industrial & retail trade uses & for small paper bags	200	Half qassab, half imported Kraft pulp
6. Cement-bag papers	1,000	Imported Kraft pulp, with not more than 25% qassab pulp cooked, to give strongest fiber
	4,200 - 4,700	

The equipment for the pulp and paper mill on which costs have been based is the simplest reliable equipment available. The papermaking machine is of the Fourdrinier type, having a nominal capacity of 15 tons in 24 hours. It has a width of "trim" adaptable to the manufacture of cement-bag paper as well as other types. It is considered to be the best type with which to start operation of a paper mill, since it produces strong flexible papers suitable for wrapping and bag papers, for writing paper, and for many special uses. The cylinder machine produces heavy papers generally stiffer than those from the Fourdrinier, and is used particularly for boxes and stiff sheets of cardboard. As a Fourdrinier machine can produce a wider variety of products, it is more suitable for the initial installation. In estimating the cost of a Fourdrinier

machine, it has been assumed that a high-grade, reconditioned machine of adequate capacity will be purchased, since the size required is small and a small machine should be available from a mill in Europe or the United States which is increasing its capacity by replacement of Fourdrinier machines. This type of paper machine has a long operating life, and a reconditioned machine will give completely satisfactory service at a considerable saving in the purchase price. Quicker delivery can also be obtained. There are many cases in which countries have been able to reduce paper-mill investment costs by buying reconditioned machines. Most of the auxiliary equipment would be new, but its cost is small in relation to the cost of the Fourdrinier machine.

The mill should be so constructed as to permit ready expansion in the future. The machine room, that is, the area of the mill containing the paper-making machine, should be planned to permit the installation of a cylinder-type machine beside the Fourdrinier. This would permit a wider variety of paper and paper-product production, and would make possible the production of most grades of folding boxboards. Pulping digesters and the washing and refining equipment should be selected initially to supply the requirements of the Fourdrinier machine only, but allowance should be made in the planning of the mill to permit installation of additional equipment of this type as other machines are added.

Allowance has been made in the cost estimates for the provision of deepwell pumps to supply the large amount of water required, a filtration plant for water preparation, an elevated water-storage tank, and a steam generator. No provision has been made for the purchase of land or for waste-disposal, but it is felt that these two costs will be relatively small. No allowance has been made for bleaching facilities, since imported bleached pulp will be used for white writing and printing paper. It has been assumed that electric power will be available at the plant site at a cost of 2 fils per KWH.

The cost estimates prepared do not allow for the production of excess pulp, but only enough for the production of paper. There is, however, a possibility that local demands may arise for a supply of pulp to be made into hardboard. Some test work has been done by a company in Iraq on the possibility of making hardboard from "birdi" reeds. The results of this test work are discussed later in this report. Further work is required on this possibility as well as on the possibility of making paper from "birdi" reeds. If additional pulp should be required for hardboard manufacture, it would be possible to add the pulp-making facilities to those of the paper mill or to establish a separate unit. An evaluation of the problem would have to be made in the light of the then prevailing circumstances.

The investment cost of the paper mill erected in Iraq is estimated to be ID 686,000, exclusive of working capital, costs for land, and cost of waste-disposal. Details are shown in Table 71. Working-capital requirements are difficult to estimate because of the need for some imported raw materials, but about ID 100,000 should be adequate. If electric power is not available, investment costs would increase by about ID 40,000.

An estimate of the cost of producing wrapping paper has been prepared

to give an idea of the probable cost per ton. The cost of such paper, which would require about 25% of imported Kraft pulp, would be higher than papers of lower grade, but the relative import price is higher.

Wrapping paper is estimated to cost ID 66.620 per metric ton to produce, as compared with ID 90 per metric ton landed at Basra. (Table 75 shows approximate import prices of various types of paper.) This production price makes no allowance for profit, for which an allowance would be made in establishing the selling price of the paper. Details of estimated operating costs are presented in Tables 72 through 74.

It must be pointed out that the cost estimates discussed here and detailed in the tables of the report are based on available knowledge and pulp and paper mill experience elsewhere. As such, they may have to be revised after detailed studies have been conducted in Iraq on the actual site location, water supply, waste-disposal, housing requirements for foreign personnel, etc. However, it is felt that the estimates are realistic and will serve as a helpful guide in the establishment of a pulp and paper mill in Iraq.

No allowance has been made in the estimates for equipment for converting paper to boxes, bags, etc. This would represent a fairly small investment and would probably evolve under private interests as required. At present, one of the cement companies has equipment to manufacture cement bags, and there are indications that this equipment would be expanded to take care of Iraq's needs as demand grows.

7. Special Problems and Considerations

The following items will require special consideration in the planning of a pulp and paper mill.

a. Site Location

The plant should be located in the Basra region, since the principal raw materials, reeds and rice straw, are available in this general area. When caustic soda is manufactured in Iraq, the plant will be at Basra, making the supply of this raw material readily available. Until caustic soda is manufactured in Iraq, it will be landed at Basra, as will other imported raw materials.

The actual location site of the plant must be carefully selected because of the requirements of large amounts of water and of waste-disposal facilities, discussed in further detail below. In addition, ample storage space for reeds, straw, and imported pulp must be available, as well as sufficient area for doubling or possibly ultimately quadrupling the capacity of the mill.

b. Water Requirements

A fresh-water supply capable of delivering at least 1 million gal. of fresh water per day must be available. The water can come from either the river or wells, but it must be reasonably soft water. A small amount of color or sediment will not be objectionable for most of the production, but for white

TABLE 71

ESTIMATED FIXED CAPITAL REQUIREMENTS FOR IRAQ PULP AND PAPER MILL

		COST(ID)
I.	Cost of Equipment, C.I.F. Port of Entry	
	A. Reed and Straw Preparation	30,500
	B. Cooking, Washing, and Screening Plant	70,000
	C. Preparation System for Purchased Pulp and for Cooking Straw	16,000
	D. Final-Pulp-Preparation Plant and Metering Instruments	17,500
	E. Paper Machine and Machine-Room Auxiliaries	110,000
	F. Finishing-Room Equipment	16,000
	G. Pipes, Valves, and Fittings	23,000
	H. Electrical Equipment	20,000
	I. Steam Plant	35,000
	J. Water-Treatment Plant	50,000
	K. Mill Service Department and Repair Shop	27,000
	L. Engineering and Technical Services, to Include Over-all Supervision	36,000
	Total Cost of all Equipment and Services as Scheduled in "A" through "L," C.I.F. Port of Entry	451,000
II.	Local Expenses	
	M. Labor for Erection of Equipment	57,000
	N. Development of Site, and Labor and Materials of Construction for Buildings and Structures	55,000
	O. Construction Overhead	44,000
III.	Allowances for Contingencies	25,000
	Total Items II and III.	181,000
	All Items "A" through "L"	451,000
	Total Items I through III	632,000
IV.	Interest on Capital During Construction	54,000
	GRAND TOTAL	686,000

papers a part of the water may need clarifying by treatment and settling.

c. Disposal of Mill Wastes

The disposal of waste from the mill, especially the wash water from the pulping operation, will require field study. The study will be particularly important if the mill is to be located near any public water supply or near a location from which irrigation water would be drawn from the river below the mill. Special treatment of the waste may be required to prevent contamination.

d. Employment

It is anticipated that a pulp and paper mill of the size discussed will probably employ about 100-150 persons. In addition to the workers employed in the mill, however, there will be many more persons engaged in the

TABLE 72

COST OF PRODUCING PULP

The following figures are based on the production of 3,400 tons of pulp annually from reeds and straw, using 20% of caustic soda for cooking and assuming a yield of 45% from the reeds. (The 4,500-ton capacity of the paper mill includes the use of imported pulp, thus accounting for a smaller pulp-production figure.)

ITEM	UNIT	ID PER UNIT	UNITS PER METRIC TON DRY PULP	COST PER METRIC TON AIR-DRY PULP(ID)
Raw Materials				
Reeds & Straw	Metric tons	4.100[1]	2.2	9.020
Caustic Soda	Metric tons	30.200[2]	0.4	12.080
Utilities				
Steam	1000 lb	0.135	6.6	0.890
Power	KWH	0.002	400	0.800
Water	1000 gal	0.0180	20	0.360
Direct Labor (Raw Material Handling & Cooking)				
Labor	Man-days	0.750	4.5	3.375
Foremen	Man-days	1.500	0.5	0.750
Maintenance, Labor, & Supplies	-	-	-	1.450
Basic Cost of Pulp Delivered to Unrefined Storage Chest (Exclusive of Overhead)				28.725
Cost of Refining and Delivery to Paper-Machine Chest				1.100
TOTAL COST DELIVERED TO PAPER-MACHINE CHEST				29.825

1. Includes storage and handling at the mill.
2. Based on selling price from domestic caustic soda and chlorine plant operating at full capacity of 10,000 tons per year of caustic soda.

gathering and transportation of reeds. The latter group will probably comprise many persons who hitherto have not had a steady source of employment.

e. Pulp for Rayon Manufacture

If rayon is manufactured in Iraq, a supply of bleached pulp will be required. As it is not known whether a satisfactory bleached pulp could be made economically from the reeds, rayon manufacture would initially have to be

TABLE 73
COST OF PRODUCING WRAPPING PAPER

ITEM	UNIT	ID PER UNIT	UNITS PER METRIC TON PAPER	COST PER METRIC TON PAPER (ID)
Raw Materials				
Domestic Pulp	Metric tons	29.825	0.74	22.070
Imported Un-bleached pulp	Metric tons	50.000	0.24	12.000
Rosin Size	Metric tons	65.000	0.02	1.300
Alum	Metric tons	37.500	0.03	1.125
Miscellaneous	-	-	-	0.360
Paper-Machine Conversion Cost, Including Labor	-	-	-	9.000
Finishing & Shipping	-	-	-	1.800
Overhead (See Table 74 for Details)	-	-	-	18.965
TOTAL COST				66.620

based on imported pulp. Once a pulp and paper mill has been established and experience gained in unbleached manufacture, however, experimental work could be undertaken to try to make a bleached pulp for rayon use.

8. Means of Establishment

The project for the establishment of a pulp and paper mill should not be the direct concern of the Development Board. The amount of capital required for its establishment is small in relation to other projects requiring Board assistance, and the time and energy required for its establishment and operation could be more rewardingly devoted to other projects. It is recommended that the Development Board advise the Industrial Bank to make funds available for the purpose of establishing a paper mill, provided that due consideration is given to the principles outlined in this report.

The erection of the mill should be entrusted in its entirety to one contractor, responsible for turning over to the proprietors a complete operating mill, with capable personnel hired from abroad and with the entire local labor force trained and smoothly working. The contractor should be prepared to cooperate with local authorities in arranging for the flow of raw materials to the mill and the provision of all the various facilities, such as power and water supply and mill-waste disposal. The adequate provision for storage and

TABLE 74
OVERHEAD ALLOWANCES

The figures presented below include salaries, administration charges, selling costs, and depreciation on equipment and buildings. Charges per ton are based on the production of 4,500 tons of paper per year.

ITEM	ANNUAL CHARGE(ID)	CHARGES PER TON PAPER(ID)
Administrative, Supervision, and Selling	21,000	4.670
Building Depreciation - 3% on ID 71,000	2,130	.475
Equipment Depreciation - 5% on ID 615,000	30,750	6.830
Total, Exclusive of Interest on Capital	53,880	11.975
Interest at 4% of Total Capital (ID 786,000)	31,440	6.990
Total Overhead Allowances	85,320	18.965

TABLE 75
PRICES OF SOME IMPORTED PAPERS AND PAPER PRODUCTS

TYPE OF PAPER	LANDED PRICE AT BASRA (ID PER METRIC TON)	TRANSPORTATION BASRA TO BAGHDAD (ID PER METRIC TON)	IMPORT TARIFF
Kraft Wrapping Paper	90	3	ID 24/Metric Ton
Newsprint	70	3	-
Writing Paper	107	3	15%
Printing Paper	100	3	15%
Heavy Duplex Cardboard	80-90	3	ID 10/Metric Ton

handling of the raw materials should be his direct responsibility. Adequate housing for foreign personnel should also be a prime concern of the contractor.

In addition to constructing the mill, the contractor should be prepared to hire the necessary skilled personnel to operate it and to manage it for a reasonable period-up to six or even 12 months. The contract should cover the responsibility of the contractor to deliver a successfully operating plant with all equipment satisfactorily working and with the staff trained for the guaranteed production of 4500 tons annually.

Only a company with a history of satisfactory performance in this type of project should be considered for the contract. Preferably the mill should be designed and supervised by a company with papermaking experience in the United States, England, Canada, or the Scandinavian countries, as these countries have made the greatest progress in papermaking practice in recent years. The individual pieces of equipment can be manufactured to the contractor's specification in any country where quality and cost is most advantageous.

9. Alternate Processes of Pulp Production

In addition to the soda process of pulp manufacture recommended in this report, there are other types, such as sulfite, sulfate, and newer modifications of basic processes. Of the standard proven processes, the soda process has been found to be the best for the pulping of "qassab" reeds, and the mill can be arranged to permit the addition of sodium sulfide to provide a variation of cooking conditions.

Care must be taken that "simple" processes or trick machinery are not incorporated into the pulp and paper mill. Other countries have been penalized by the purchase of such equipment, which later proved to be unsatisfactory. Only proven processes and methods should be used.

10. Hardboard from Reeds

Another possibility exists for using reeds effectively, namely, their use as a raw material for hardboard. Experiments have been made by an American company for an Iraqi export firm to evaluate the suitability of reeds as a hardboard raw material. So far, only "birdi" reeds have been the subject of investigation, but the results of the initial tests indicate that a satisfactory hardboard can be made. Whether "qassab" can also be used is not known, although it is quite possible. Further tests would be required, in addition to other tests on the "birdi."

If hardboard can be satisfactorily and economically produced, many uses are foreseen for it, such as construction shuttering, decorative wall or ceiling paneling, and table-top surfacing. Its adaptability as construction shuttering (that is, the forms for holding the cement during pouring) will require both experimentation and publicity. The cost of shuttering depends upon the original cost of the material and the number of times it can be used before discarding. At present, steel and wood shuttering is used in Iraq. Steel shuttering in Baghdad costs 45 fils per square foot per time used, while wood

shuttering costs 72 fils per time used. A material such as steel, plywood, or hardboard requires a strengthening or supporting framework, usually made of 2"x3" or 2"x4" lumber, but it may also be made of 1" or 1½" steel angle irons.

The use of hardboard as shuttering will depend primarily on its use cost, that is, its original cost divided by the number of times it can be used. To enter the field in competition with steel and wood, it must be cheaper (on a use basis) than the materials presently used, and equally satisfactory. Below is an indication of the maximum permissible cost of hardboard, if a market is to be found for it:

No. of times used	Maximum permissible cost per square foot (fils)
1	36
2	72
5	180
10	360

The preliminary work done indicates that these prices are within reach, but it is not known how thick the hardboard would have to be for shuttering use. To select the most suitable thickness would require experimentation and cooperation with the building industry.

With the exception of the use of hardboard as table covering, other uses would also require cooperation with the building industry to promote its use. Hardboard can also be used as decorative wall and ceiling paneling. One method of roof construction, widely used in the United States, is to clip wallboard to the bottom of steel "I" beams, and then to pour either lightweight aggregate or gypsum concrete on this formwork, leaving the wallboard in place to form the finished surface.

The greatest use of wallboard in the United States is as a wall covering. In this application, it is nailed directly to wood partitions. Because of the lack of wood in Iraq, and the use of solid masonry partitions, this would be impractical. Nevertheless, by inserting wood plugs at appropriate spacings in the masonry, hardboard could be attached as a thin, permanent wall finish, which might be very attractive in appearance.

Private interests in Iraq have carried on the expensive, preliminary experimental work in this area. They are interested in the establishment of a hardboard-manufacturing plant and a paper mill, both using reeds as a raw material. It may be, however, that because of the large investment involved, financial assistance through the proper financial agencies will be required.

Additional work is required to:

1. Determine equipment specifications for a plant to manufacture hardboard.
2. Prepare sufficient hardboard for contractor experimentation in Iraq.
3. Evaluate the suitability of "qassab" as a raw material, as well as the advisability of blending the two reeds.
4. Evaluate the erection of a hardboard plant with its own pulping mill, versus

expansion of the pulp mill of the paper plant.

II. Appendix.

a. Capacity of Proposed Plant

The capacity of the paper mill recommended for establishment was based on careful consideration of the amount of paper that is currently used in Iraq and on estimates of future needs. Although the proposals contained in the report envisaged that a mill with a capacity of 30-40 tons of paper daily would probably be possible in the future, it was considered that the project should be planned for the larger capacity but that construction should be carried out in stages. Initial plans should, of course, provide for certain facilities, such as water supply, waste-disposal, raw material storage, and certain of the machine units of sufficient size to take care of future requirements. As soon as production gives promise of being fully sold, the management can install a second papermaking machine and additional digesting equipment, and make additions to the stock preparation and refining equipment.

Of the total market for paper and paper products, some of the grades are best made on a Fourdrinier machine while others are more satisfactorily produced on a multicylinder machine. In some cases it is possible to produce on a Fourdrinier machine substitutes for items such as boxboards and harder, stiffer boards that are more suitably made on the multicylinder machine. Thus, the Fourdrinier machine can provide a rather broad range of products. In other cases, it is difficult to produce, from the raw materials available, grades of paper that are now imported from foreign mills that specialize in cylinder-made boards. It would be unwise to attempt to make all types of imported papers in one mill in Iraq and to forego the advantages of drawing upon the output of many different and specialized plants.

Nevertheless, it was recommended that the mill be designed so as to permit expansion by means of the addition of a cylinder-type machine. The output of this additional machine together with the extra production that could be obtained from the Fourdrinier machine in excess of the nominal 15-ton-per-day production would give the plant a potential daily output of 30 to 40 tons. Some of the individual pieces of equipment that would be used in the mill would readily handle the increased load although certain additions would be necessary. It is common practice in the United States to have a machine-room layout with a Fourdrinier machine on one side of the aisle and a cylinder machine on the other and to begin operations with a machine room of sufficient size to install a second machine at a later date.

b. Use of Rice Straw

It is stated in the report that it would be desirable but not necessary to blend rice straw with reeds to improve the quality of the paper. Comparative data on the physical properties of papers made from reeds and reeds mixed with rice, wheat, and barley straw are not available, but tests show that although phragmites reeds are best for strong papers with Kraft and that no

significant strength improvement is obtained by adding rice straw, it is desirable for the finer grade. Wheat, rye, oat, and rice straws have approximately the same length of fibers, but rice is about two-thirds the diameter of the others and generally makes a better-formed paper. Satisfactory papers have been made from phragmites reeds with 25%, 50%, and 75% rice straw, and there is little doubt that it is a suitable supplement.

It is recommended that straw be used to supplement the reeds, because of its beneficial effect on quality and because of the absence of definite information, in the form of a physical survey, as to the extent of the reeds. Wheat or barley straws would, to some extent, be superior to rice straw, and very considerable papermaking operations have been based on them. Selection of rice straw for use in Iraq, however, was based on ready availability and economics. Rice straw is generally grown in the southern areas, principally in U'mara Liwa, and its nearness to the reed supply and paper-mill location favor its use because of the lower transport costs. Barley straw is grown just north of the rice-growing area and would make a good second choice. On the other hand, wheat straw is grown mainly in the north, where it is used extensively as animal food and as fuel. The cost of transporting the wheat straw would rule out its use as an economic supplement, and in view of the fact that the extra cost would result in no major improvement in the paper product, the use of wheat straw was not recommended as the prime supplement. It is estimated that rice straw could be delivered to the plant at the same price as the reeds, although a slight extra cost would be involved because the higher silica content of rice straw requires a somewhat higher consumption of cooking chemicals.

c. Manufacture of Paper from Reeds

There are few, if any, pieces of equipment that go exclusively with any of the common paper-pulping processes, and there are few, if any, secret or exclusive processes that can be claimed by any one company or group of machinery or process promoters. Different equipment manufacturers may rightly claim, at times, some patentable modification of standard units, but in almost every case the same or equivalent effect can be obtained with competitive equipment. For instance, in refining units, there are many, each of which bears the inventor's name or the company's trade name, none of which are exclusive in their basic performances. Salesmen often attempt to create the impression of a special or exclusive process of papermaking, but the time for such sales efforts has passed. People not familiar with fundamental techniques may be influenced, but any overemphasis of exclusive or superior processes or equipment combination should be critically examined.

Before answering the specific questions of the Ministry on equipment, it may be helpful briefly to outline the several important steps in making papers from chemically treated raw materials:

a. The first stage: a treatment with chemicals in a water solution. Usually, this is carried out in a closed vessel, in order that by raising the pressure the temperature can also be raised to a point that performs the double function of softening the lignins and other fiber-binding materials and at

the same time increasing the activity of the cooking chemicals. The action is practically independent of the shape or type of the enclosed vessel that is used, provided that a rotating motion or a liquor-circulation system prevents dead spaces. A recent modification is to use an open kettle (which limits the temperature to 100C or under) and to aid chemical action by violent agitation. This is usually referred to as the mechanico-chemical method of pulping. Another modification that has been studied is to use nitric acid as the pulping chemical, which is so active that it will accomplish pulping at low temperatures in an open vessel without violent agitation. A nitric acid process is possible with special stainless steel equipment, but it raises practically insolvable corrosion difficulties.

b. The second stage: washing the softened cooked material with water to remove the noncellulosic rejects. To aid in the washing, the pulp is often agitated as in a beater or by passing through a device that gives moderately violent movement.

c. The refining, or fiber preparation, to make the type of paper desired. Although pulps from different sources and, to lesser extent, pulp from different methods of cooking, behave differently and require modified treatment, the fundamental action is called hydrating the fibers. The degree of hydration or beating, speaking in general terms, produces a sheet of paper varying in characteristics from a soft sheet like felt or blotting paper, to the thin, transparent, easily torn sheet of glassine. In between these extremes of treatments are papers that have maximum strength, like wrapping and bag papers, and those that are finely formed and smooth, for writing or for printing, etc. The refining operation is still carried out, for the most part, in hollanders or beaters, although new types of machines, bearing such names as fibrators or fibrillators, are coming into use. In Europe, the Khollergang is still used for the purpose, but is practically nonexistent in the United States, where the technology of beating has moved to more efficient methods of fiber preparation.

d. A fourth step, used for certain types of paper, is fiber shortening or cutting without hydrating. This step is usually performed in a jordan. To produce the uniform, fine formation of the sheet that is desirable for many papers and required in other cases to modify the tear and strength characteristics, it is necessary to cut or shorten long-fibered pulps. This can be done in the slow, time-consuming treatment in a beater while hydrating, but it is difficult to control. The jordan is a machine equipped with cutting bars on a rapidly revolving central shaft in an enclosed casing. The shortening action is accomplished practically instantaneously without hydration. Hence, mills making a variety of papers usually include a jordan in the flow sheets. In the case of the short-fibered pulps from reeds or straws, the jordan action is not so often necessary, but when using long-fibered pulps, such as kraft or sulfite, it may be necessary when they are used alone or blended with others. Other machines available do not go under the name of "jordan," but their action is basically the same and the efficiency of action is not greatly different. The jordan in one sense is not

an outstanding piece of equipment in size or in cost, and for many grades of paper it may be by-passed entirely, but for the production of many of the grades that this mill will make, it or its substitute is practically essential.

e. The final step before delivering to the headbox of the Fourdrinier or the forming vats of the cylinder machine is to add a rosin or wax sizing material; alum to set the size; and fillers or a dye, if colored paper is desired. These materials are usually added in the beater or the agitated holding chests, or at any convenient place in the line between the refining step and the paper forming.

In the light of the foregoing five-step description of pulping and preparation, it will be easier to comment upon the questions regarding digesters, hydropulpers, and jordans.

Continuous digesting is a fairly recent development in the United States, although it was used earlier in some European installations. It was introduced into the United States about 15 years ago as an adjunct to the Asplund Defibrator, a machine first developed in Sweden. The Asplund consists of rotating discs enclosed in a pressurized casing, in which wood chips can be softened by high-pressure steam while being rubbed between the rough or flinted surface of the discs. The outstanding feature of the machine is a pressure lock at the entrance and exits of the pulping chamber that permits the stock to pass through without escape of the steam. This device permitted the addition of enclosed, horizontal, digester-like tubes leading to the pulping chamber, through which the chips could slowly travel while being heated and subjected to the action of cooking chemicals. Several adaptations of the idea are offered for sale in the United States, notably the Pandia, or chemi-pulper; the process of the American Defibrator Co.; and a process used in bagasse at the Grace mill in Peru, developed by the Process Evaluation and Development Corporation.

Antedating these, of course, are the Pomilio and Celdecor processes and adaptations of the basic idea. This process has often been studied in the United States in the past by paper manufacturers who might have used it, and by manufacturers of caustic and chlorine who thought they saw new markets for their chemicals. It has never been found economically competitive with other methods of pulping, and as far as is known has never reached the point of a pilot-plant test.

Initially, the possibility of using a continuous digestion process was considered for use in Iraq, but it was decided that if the mill used the standard rotary (or even cylinder) digester, operating troubles would be reduced and there would be the assurance that it would always do what it was required to do. The small size of the mill seems to favor the use of the non-continuous digestion, but if it can be shown that modifications of equipment in use in the United States or alternative and more adaptable designs of the continuous method are available from Europe with a record of economically successful performance on straws and reeds, consideration might well be given to the installation of such a system. It is understood that a continuous pressure digester system of 15 tons' capacity, making unbleached pulp from sugar cane

bagasse, has been found to be economical in South America, and it seems probable that equally satisfactory results could be obtained with phragmites.

Spherical digesters are almost exclusively used for digesting light, fluffy materials, like straws, in the United States. No one company or manufacturer can claim merit or priority in their use. They are easy to fill, have good circulation when rotated, and can be dumped practically without manual labor, simply by rotating them, with the cover of the filling manhole removed. On the other hand, there are greater percentages of cylindrical-shaped digesters in use in Europe and in the older mills in the United States. Their cooking results are the same, but they require more labor and time for filling and emptying because manpower must be used to distribute the charge over the cylindrical length and also to rake it out at the time of dumping.

The hydropulpers, a patented development, came on the U.S. market 15 or more years ago, being introduced by the Diltz Machine Co. of Fulton, New York. These machines consist of an open tank with a rounded bottom, on which rotates a high-speed disc equipped with projections or dull cutting edges. They function on the principle of the disintegrating action of friction between the fibers and the cutting edges, plus the shearing action of vortex flow in highly agitated water. They are produced in sizes from 4 to 14 or more feet in diameter, and their adoption by all kinds of paper mills has been sweeping. Their value lies in their ability to break up or pulp all kinds of fibers from mixed waste papers, ranging up to action on smoothing out and to some degree refining many kinds of the higher grades of pulp furnishes. There is nothing exclusive about hydropulping any more. Several rival machines are on the market, such as the Dyrapulper and the so-called Jones hydrapulper. Recently a mill in Puerto Rico built its own machine without the help of any manufacturer.

Generally speaking, the original hydropulper design and shape seems preferable, and by far the greatest number of mills have adopted it. A machine of this type is recommended because of its adaptability to many uses. It is superior to the beater for breaking up unrefined pulps. It is an excellent mixing device for different pulps and would be especially adaptable to the use of the mechanico-chemical process to make low-cost medium grade papers from growths like phragmites or straws. It is probable that high-yield, low-chemical-cost papers or boards made by this process can supply some of the customers who now import low-grade boxboards, etc.

Although boxboard mills, or mills making container board, have been the most enthusiastic users of the hydropulpers because of their adaptability to breaking up waste paper and baled stock, other mills have widely adopted them as a supplement to, or in some cases a substitute for, old-fashioned beaters. Experience of the U.S. Department of Agriculture Laboratory at Peoria indicates good results with hydropulpers.

The jordan has already been discussed. Because stock preparation for certain grades of paper requires the cutting and smoothing-out action of jordaning, a machine of this kind is indicated. Equipment of another name would be equally acceptable if offered as a substitute. If a typical jordan, it would be of the smaller sizes, which can sometimes be picked up at very low

cost. These machines almost never wear out and replacement of the worn cutting bars (a periodic operation in any case) is about all that is necessary to make a small machine serviceable.

As to the question of regeneration or reuse of the cooking liquors in what is ordinarily called a recovery plant, that step is uneconomical in so small a pulping operation. For the type of cooking or pulping that would be carried on, the amount of chemical used would be less than for an operation making fully bleachable or highly purified pulps, and it is cheaper to discard the cooking liquors than it is to recover them for reuse. Recovery plants are costly to build and to operate and are not adaptable to small-scale operations such as this.

In this connection, attention is called to the item of caustic soda requirements in Table 72: the figure of 0.4 ton of chemical per metric ton of dry pulp applies very conservatively to fully cooked and bleachable pulps. For the pulps that will be mostly produced, the amount of caustic will be less. The mechanico-chemical process gives satisfactory pulps for some uses when lime is used as the principal chemical. The bleached papers prepared from phragmites from Iraq made at the U.S. Department of Agriculture Laboratory used 185% caustic to produce a bleached pulp. The figure of chemical cost in the table is, therefore, on the conservative side for a great deal of the expected production. Likewise, it may be noted that the item of raw material represents the highest unit costs. Efficiency of fiber yield is taken at 45%, whereas 65% may be expected from many cooks.

d. Process

For comments on process, it is first necessary to know whether a mill is to produce pulp of high purity for bleaching and for the production of white papers, or whether the aim is to use less drastic cooks and to produce a pulp of high yield but satisfactory strength for a wide range of unbleached papers. Because of the small size of the pulping operation, both for the present and potentially, this mill could not economically support a chemical-recovery plant or a bleaching operation. Likewise, a plant for fully bleaching a part of the output to make white papers would be out of the range of economical operation. If and when chlorine is available at reasonable cost, it may be desirable to do a partial bleach to lighten the color of some orders that will pay for it. This can be done with a small expenditure for equipment.

A plant utilizing soft growths, such as reeds and straws, to be cooked in closed digester systems, may use chemical combinations like the following: (1) leave lime alone or in combination with small amounts of caustic soda, sodium sulfite, or soda ash; (2) caustic soda by itself; (3) kraft- or sulfite-process chemicals in combinations of caustic and sodium sulfide or caustic and sulfur; (4) sodium sulfite with lesser amounts of either soda ash or caustic used as buffers; (5) Celdecor cooking using caustic soda and chlorine; and (6) the recently developed mechanico-chemical methods of pulping, utilizing lime or lime combinations with soda ash and caustic, or caustic alone, or kraft chemicals alone.

The U.S. Department of Agriculture Laboratory has found that pulps produced by the mechanico-chemical technique using lime or lime combinations give high yields, but are suitable only for boards or coarse, unbleached papers. Proper selection of chemicals or cooking conditions in the other processes listed above will produce stronger pulps, suitable for use in the range of unbleached coarse papers up to fine.

Tests of Celcedor pulps from Pakistan from sugar-cane wastes have shown lowered strength characteristics as compared with similar pulps prepared in the United States by soda or kraft cooks. Straight soda cooks usually give slightly softer pulps than those from sulfate. As between soda and sulfate cooks, many tests have been run in the United States on the pulping of agricultural wastes. For cooking strengths using 12% to 14% chemicals, the averages of many tests show that yields of fiber are almost exactly the same. Tensile and tear tests are very slightly in favor of sulfate, but folding resistance is in favor of the soda treatment. For stronger or weaker cooks, there may be slight modifications in these comparative results, but they would be very slight.

The following table gives a few representative strength tests taken from tables of a great many pulping tests made at the U.S. Department of Agriculture Laboratory at Peoria, Illinois. The data are for bagasse, not reeds, but bagasse behaves very similarly to straws and very likely very similarly to phragmites reeds. It is necessary to bear in mind that papers are made to meet specific tests, with either burst, tear, fold, or tensile strength the most important. Beating, hydrating, or jordaning the pulp can, to a certain extent, modify any one at the expense of the others. Therefore, the results of these tests cannot be taken too literally.

	% of Chemicals	Yield of Pulp	Burst	Tensile	Tear	Folding
Hawaiian Bagasse	12% soda	62	82	162	68	300
	12% sulfate	64	84	165	62	350
Florida Bagasse	12% soda	61	110	190	55	900
	12% sulfate	61	115	194	60	1120
Florida Bagasse	Neutral sulfite 13%	62	113	188	63	920

One objection to the sulfate cook is odor. The mercaptans resulting from sulfur compounds during pulp digestion may be an industrial nuisance in residential communities or where the plant is near a city.

Cooks with lime are, of course, the lowest in cost, but the uses for these pulps are restricted. There is very little difference in chemical cost as between straight soda and sulfate cooks, the latter differing in composition only by having a part of the caustic soda replaced by sodium sulfide. The cost data given in the report was made up with reference to the soda cook used to make bleached sheet from the reeds from Iraq and Egypt. This test demonstrated

that a satisfactory paper could be made of phragmites with a soda cook, but in actual practice in the mill the superintendent would determine whether to use straight soda or sulfate chemicals. The plant layout with either the closed digesters or the hydropulper available will permit varying the time, the temperature, the choice of chemical treatment, and the strength of chemicals. A short period of operation will make it possible to determine the best procedure for the various grades of paper that the mill will be called upon to make.

e. Costs

It is difficult to make cost comparisons between a proposed mill in Iraq using a reed as raw material, and mills in other parts of the world using wood. There are many small mills in South America, but details of their financial history are not known. It is certain that a 15-ton-per-day mill in the United States, attempting to supply a mixed market, would not be profitable. This is mainly because competing products from the nearby large mills are lower in price.

For the mill in question, investment costs are on the whole conservatively estimated and the operating costs are liberally stated. In comparison with local selling prices, there appears to be an attractive margin of profit.

Referring again to the tables of unit production cost, the figures given there may be misleading without explanation. With intent to make the figures conservative, a high-cost grade of paper was chosen for the example, namely, a wrapping paper having 24% imported kraft. Also, the pulp cost was predicated upon a use of 20% chemical and a yield of only 45%.

It is to be expected that for coarse, heavy papers and boards, the yield will be nearer 60% (requiring only 1.67 tons of reeds instead of 2.2 tons) and the chemical will be nearer 12% (thus reducing chemical cost from ID 12.000 to ID 7.200).

White papers from imported bleached pulps will be higher in production cost than indicated by the example, but they will be in much smaller volume. A large proportion of the market will use papers costing less than the example.

It would be difficult and almost impossible to determine minimum selling prices for the various grades of paper now being imported; to estimate all tariffs, import duties, or taxes; and to take into account only the C.I.F. delivery costs, plus internal transportation, plus a guess of what the producer's satisfactory profit would be.

Perhaps that could be done by a local study. The estimates assume that raw materials in sufficient quantity can be obtained at about the unit figures stated in the report. Supervisory labor and management requiring imported personnel may be expected to be higher than average during the early months of starting, but these costs should be reducible to normal by the training abroad of local technicians, who would take over as soon as the operating period is passed.

It is planned that this 15-ton installation is only a nominal starting capacity, that there will be steady progress toward expansion to double or

possibly to triple this size, and that operating costs will drop correspondingly. Fixed charges and some overhead costs will, of course, increase as the plant's capacity is expanded, but in a smaller proportion; paper-machine-room wages, one of the big labor items, will not increase as the output of the machines steps up. The same crew will run the machine. Unit labor costs will, therefore, be reduced.

The allowance for maintenance costs may be considered slightly low. Although no separate maintenance item is shown for the papermaking portion of the mill, a small portion of the "conversion cost" will be required for maintenance. In view of the fact that the costs for felts and wires on the paper machine may run high, especially in warm weather if the water is bad and bacterial action occurs in the felt, and in view of the desire to keep costs on a conservative basis, a doubling of the maintenance allowance would be in order. Likewise, it might possibly be desirable to increase the depreciation allowance to account for a shorter life for Iraq's mill.

The increase in maintenance and depreciation allowance would increase the over-all production cost of the sample paper selected. However, as indicated in the answer to question 5, the reed and chemical costs are felt to be very conservative and their slight reduction might be in order. It is thus considered that although individual items in the estimate might be altered slightly, over-all costs should remain about the same and the mill should be a profitable operation.

f. Foreign Markets

Table 76 shows imports of paper and paperboard for India, Iran, Jordan, Lebanon, Pakistan, Syria, and Turkey.

g. Reason for the Recommendation that Bleaching Facilities Should Not Be Installed

The principal reason for the recommendation that bleaching facilities should not be installed is an economic one. The amount of white paper that would be produced to supply Iraq's market is small. Cooking for bleaching is costly unless there is a recovery system. Bleaching equipment is costly and is not standard in sizes that could economically serve a mill of this size. In the event that the market for bleached paper expands to a size that would permit economical bleaching, and if chlorine for the bleaching operation is then readily available, a bleach plant can be easily added to the mill at that time.

h. Use of Waste Paper as Supplement to Reeds and Rice Straw

It is considered that as much waste paper as possible should be collected and mixed with the reeds and straw as required. While collections of high-grade kraft wrapping paper, cement bags, etc., would be the most valuable and, in fact, for some uses would be almost equivalent to virgin pulp, the use of old newspaper, old boxboard containers, and corrugated containers would also

be valuable. Stock of the latter type can be reworked into boxboards, or what many people call "cardboards." Fears of weakening the waste-paper supply are not borne out by experience in the United States, where as much as 30% of all papers used is repulped, with much of this being old newspaper. Any stock that would be used in Iraq for date boxes, for example, would probably leave the locality. Experience will dictate the proportion of waste paper to be used and much will depend on the demand for and production of boxboards.

i. Storage of Pulp

The recommended mill makes no allowance for a dryer for drying pulp for storage. Stored pulp will be in very small quantities, if required at all, and it will not be costly. Except for a few days' storage, the mill manager must plan his production schedule to avoid it. To store pulp in piles, it is necessary to run it off on what is called a "wet machine," which produces thick, damp sheets that are folded like blankets and stacked, often in the open. These stacks would have about 60% moisture and if kept for any length of time it would probably be necessary to treat the pulp, while in a slurry form, with a fungicide.

In fact, the storage of pulp in this "wet lap" form is common practice in the paper industry, and pulp is often stored for indefinite periods of time. Frequently, where water shipment is available and the excess weight is not very important, the wet pulp is transported over long distances in ships and barges.

Table 76.
IMPORTS OF PAPER AND PAPERBOARD INTO SELECTED COUNTRIES, LATEST AVAILABLE YEAR

(Quantity in metric tons; value in thousands of dollars)

Commodity	Year	Quantity	Value
India[1]	1954[2]		
Newsprint paper		80,057	13,226
Machine-glazed poster printing paper.		1,475	438
White printing paper, other than machine-glazed poster or litho . . .		4,679	1,323
Printing paper, other		4,178	1,261
Writing paper and envelopes:			
Azurelaid or woven and ledger. . . .		395	153
Cream.		290	83
Other sorts of writing paper, including writing pads and boxed stationery.		5,402	1,725
Packing and wrapping paper:			
Kraft, including imitation kraft . .		5,316	1,155

Table 76. (continued)

Commodity	Year	Quantity	Value
Manila, machine-glazed or unglazed and sulfite envelopes.		1,006	254
Fancy, including embossed		40	22
Oiled, waxed, and other waterproof wrapping		123	54
Other		5,724	1,939
Blotting paper		87	49
Other kinds of paper		3,787	1,942
Straw boards		66	11
Other pasteboard, millboard, and cardboard		4,836	1,164
Iran	1953[3]		
Paperboard in rolls or sheets, whether made up and worked or not		1,344	247
Common packing or wrapping paper, in rolls or sheets, not made up or worked, weighing 35 grams or more per square meter		2,361	426
Paper consisting of several sheets of paper or several layers of pulp pasted or pressed together, in rolls or sheets, not made up or worked, weighing 35 grams or more per square meter.		1,856	449
Newsprint, weight in 35 grams or more per square meter.		5,839	909
Other paper in rolls or sheets, of natural color, white or dyed in the pulp, not made up, weighing 35 grams or more per square meter, n.e.s.		5,768	1,520
Paper, in rolls or sheets, neither made up nor worked, weighing 35 grams or less per square meter		186	69
Surface-coated paper in rolls or sheets, made up		53	26
Oiled, waxed, or paraffined paper in rolls or sheets, made up.		117	52
Carbon and similar paper in rolls or sheets, made up		10	17
Parchment paper and its imitations, in rolls or sheets, made up.		55	24
Gummed, colored, varnished gilt, metalized, silvered, micaceous, velveted, marbled, and color printed paper, transparent and other like paper, in rolls or sheets, made up		37	29
Other paper in sheets or rolls, made up, n.e.s		10	10
Special paperboard and paper, in rolls, sheets, or plates, covered or impregnated with artificial resins or similar			

Table 76. (continued)

Commodity	Year	Quantity	Value
materials.		213	35
Other special paperboard and paper in rolls, sheets, or plates, n.e.s. . . .		28	10
Paperboard and paper cut for medical or sanitary uses		16	11
Other paper and paperboard cut out for specific purposes or uses, n.e.s . . .		91	29
Other paper and paperboard, n.e.s . . .		29	11
Jordan	1953		
Cardboard not worked.		194	28
Cardboard worked.		47	9
Wrapping paper.		327	80
Newsprint		103	20
Newsprint for other uses.		303	81
Cigarette paper		16	18
Writing and duplicating paper		156	45
Other kinds of paper.		148	36
Ordinary wrapping paper ornamented or glazed		41	19
Other special cardboard or paper. . . .		100	25
Cigarette paper in booklets		18	40
Other paper, cardboard and products . .		356	146
Lebanon	1953		
Paperboard in rolls or sheets		570	95
Packing or wrapping paper, in rolls, not printed, sulfured, glazed, or otherwise made up.		1,311	209
Kraft paper, in rolls, not made up, intended exclusively for making bags for cement, ochre, asphalt, salt, and fertilizer		1,154	228
Newsprint for use in printing daily or weekly newspapers.		787	140
Newsprint other than for use in printing daily or weekly newspapers		2,056	384
Cigarette paper, in rolls, not made up.		27	23
Writing and copying paper, in rolls, not made up.		90	28
Thin paper for wrapping fruits, in rolls, printed or not.		256	68
Other paper of natural color, white or dyed in the mass, in rolls, n.e.s. . .		192	45
Ruled or lined paper in rolls or sheets		31	11
Wrapping or packing paper, in rolls or sheets, printed, sulfurized, glazed, or otherwise made up		44	11
Cellophane, parchment, or oil-treated paper, in rolls or sheets, printed or not.		108	87

Table 76. (continued)

Commodity	Year	Quantity	Value
Paper coated with mineral materials (art paper).		57	21
Other paper in rolls or sheets, made up or worked, n.e.s.		244	132
Pressed paperboard in rolls, sheets, or plates for trunk and suitcase manufacture.		69	12
Other special paperboard and paper in rolls, sheets or plates, n.e.s		38	21
Paperboard and paper, cut to size for particular purposes, n.e.s		274	83
Other paper and paperboard, n.e.s . . .		53	16
Pakistan[4]	1954[5]		
Glazed paper.		211	49
Newsprint		6,639	1,094
Printing paper, n.e.s		1,574	376
Writing and ledger paper.		1,931	557
Kraft paper		927	269
Brown wrapping, n.e.s		49	14
Packing and wrapping, n.e.s		343	138
Paper, n.e.s.		3,546	1,594
Cardboard and strawboard.		8,088	1,161
Syria	1954		
Paperboard in rolls or sheets		1,444	204
Wrapping or packing paper, in rolls, not printed, sulfured, glazed, or otherwise made up.		1,249	282
Kraft paper in rolls, not made up, to be used exclusively in making bags for cement, ochre, asphalt, salt, and fertilizers.		815	158
Newsprint for use in printing daily or weekly newspapers.		258	63
Newsprint other than for use in printing daily and weekly newspapers. . . .		393	152
Cigarette paper in rolls, not made up .		70	89
Writing and copying paper		101	20
Other paper in rolls of natural color, white or dyed in the mass, n.e.s . . .		795	207
Ruled or lined paper in rolls or sheets		381	125
Cellophane, parchment, or oil-treated paper, in rolls or sheets, printed or not		145	96
Other paper in rolls or sheets, made up or worked, n.e.s		1,289	411
Duplicating paper, cut for a particular purpose.		163	60

Table 76. (continued)

Commodity	Year	Quantity	Value
Turkey	1953		
Newsprint paper.		10,725	1,519
Printing and writing paper in rolls or sheets other than newsprint		7,488	1,933
Common packing and wrapping paper. . . .		8,741	2,038
Paperboard, including corrugated cardboard, but not building boards.		2,822	391
Building board of paper or of pulp, not impregnated		65	16
Paper and paperboard, bituminized or asphalted, including coated and reinforced with graphite in imitation of slate		225	49
Paper and paperboard, coated, impregnated, vulcanized, etc., other than bituminized or asphalted.		1,346	372
Wall paper, including incrusta		14	10
Cigarette paper in bulk, rolls, or sheets		565	394
Paper and paperboard, in bulk, rolls, and sheets, n.e.s		125	92

1. Excludes land imports of "paper and pasteboard" amounting to 2 metric tons, valued at $1,000.
2. Fiscal year beginning April 1 of stated year.
3. Fiscal year beginning March 21 of stated year.
4. Excluding land imports of "paper and pasteboard" amounting to 189 metric tons, valued at $59,000. Excludes government imports.
5. Fiscal year ending June of stated year.

n.e.s.: Not elsewhere specified.

Source: Bureau of Foreign Commerce,
United States Department of Commerce.

C. SUGAR INDUSTRY

1. Introduction

The decision to establish a sugar industry in Iraq was taken by the Development Board before work on this survey began. It was, therefore, decided not to subject this industrial possibility to the market and resource analysis that has been undertaken in other cases. Nevertheless, careful attention has been paid to the new sugar industry's problems, and a series of suggestions designed to contribute to its success are offered. These suggestions are incorporated into the various sections to which they refer.

Demand for sugar has been increasing rapidly in recent years, rising from 76,000 tons in 1951 to 120,000 tons in 1954, and it is clear that this demand is sufficient to sustain a beet-sugar industry in Iraq. The new industry's chances of success will depend almost entirely on its ability to obtain

adequate supplies of raw materials at satisfactory prices, and it is to this problem that attention has been paid.

Agricultural conditions are favorable for growing beets in the Liwas of Mosul, Kirkuk, Sulaimaniya, and Basra. Climatic conditions are satisfactory, soils are good, and there is a supply of irrigation water. Particular attention has been paid to conditions in the Mosul region, since the first factory is to be erected there. Careful consideration has also been given to the Basra region as, contrary to general belief, conditions for growing winter beets are better than for growing sugar cane, because of salty soil conditions. Sugar beets are one of the most tolerant crops for salty soil, while sugar cane is quite sensitive to salt.

2. The Cultivation of Sugar Beets

a. Mosul

Although sugar-beet cultivation has begun in the Mosul Liwa, it is doubtful whether at the moment enough beets could be obtained to supply the proposed Beet Sugar Factory with raw material for a single day's operation. So far, only 100 donums of land have been planted. On the assumption that an average yield of 13% is achieved, approximately 80,000 tons of beets would be required each year to obtain the projected annual output of 10,000 tons of sugar. On the basis of the present annual yield of 6 tons per donum, this indicates that approximately 13,400 donums (almost 25% of the irrigated land of the Liwa) must be planted with beets to sustain the plant's operations. In view of the considerable beet requirements of the proposed plant and the high proportion of the currently available irrigated land that would have to be planted, it is clear that Government plans designed to secure the cooperation of the local farmers will be of the greatest importance. Only by immediate and effective Government action can sufficient beets be obtained to ensure effective operation of the new plant. The following suggestions are offered to the Board to assist it in formulating policy in this important matter:

1. Beets should be planted as early as possible in the spring and grown throughout the summer, although some beets planted in the autumn may also be raised.
2. Whenever winter beets are grown, varieties that are resistant to bolting should always be used. Recent experiments have shown that varieties US-75 and US-56 are most suitable and that the German Klein Wanzleben N variety shows only a little bolting. Experiments with other varieties should, of course, continue.
3. Extensive fertilizer tests should be conducted. Yields obtained in the experimental growing of beets in Iraq have averaged only 13%. Experience in other countries suggests that it might be possible to increase this to 17% or 18% by the use of nitrogen and phosphate fertilizers. This and other research work should be carried out in the Experimental Stations at Nineveh and Bakrajo, where the research program should be encouraged and broadened.
4. A large number of small beet fields of from one-half to one donum in size,

scattered throughout the region among many different farmers, are likely to achieve the best results. Agricultural extension and educational work, including demonstration plots, should be supervised by officials of the experimental stations. Visits to these fields by farmers should be arranged.

5. Experimental work carried out at the Agricultural Research Stations at Nineveh and Bakrajo indicates that beets should be planted in ridges, as flat planting has shown less satisfactory results.
6. The price policy that will be employed to make beet growing attractive to farmers should be determined and declared as soon as possible. A sufficiently high price has to be paid to farmers in order to make the crop competitive with vegetable growing, which may present a serious threat to the development of beet growing. The recommendations made to the Development Board's Sugar Committee in July, 1954, by the Point IV expert, Mr. Barnes—concerning the early assignment of cultivation areas to farmers, the advancing of funds for the sowing and weeding of the beet crop, specifications governing Government provision of insect control, guaranteed purchase at minimum prices, and the establishment of minimum cultivation areas—should be acted upon. As a result of these measures, a supply of beets might be available before the factory is ready to begin operation. This difficulty cannot be avoided, but the beets need not be wasted, as they can be used for the feeding of sheep and cattle. (See Appendix, Section III-F-7.) If they are fed along with clover, straw, and cottonseed meal, sugar beets make excellent animal food. Small amounts of steamed bone meal should be added to the ration, since sugar beets contain very little phosphate. Farmers should be warned to introduce them into the ration gradually, because they are somewhat laxative. When the factory is in operation, the sugar-beet tops can be fed to animals, and it may be possible to use the crushed residue as a cattle-feed ingredient.

b. Basra

Until recent years it has been the generally held opinion that sugar beets could not be successfully grown south of the 36th parallel, but this view is now being revised. During the last 20 years there have been many developments in breeding beets for disease-resistance and bolting-resistance. Other qualities and varieties are now available which are sufficiently flexible to meet widely different climatic conditions. Another recent development has been the very successful growing of winter beets in the Imperial Valley of California, where summer temperatures reach 120F, and winter temperatures fall below 30F. This area is comparable in many ways to parts of the Basra Liwa. In the Imperial Valley the beets are planted in September and October and harvested in June and July. The normal grade there now averages 17.6 short tons per acre (9.6 metric tons per donum), with a sugar content of 17.5%. The main factor in making this a successful operation was the breeding of two new varieties, US-56 and US-75, which bolt very slightly after being exposed to winter temperatures of 30F and below.

Sugar cane grown at the Basra experimental stations shows a poor

growth due to sensitivity to salts; unfortunately, many of the soils in the region are salty, with a high pH ranging from 7.5 to 8.2. Temperatures show extreme minima of 24-28F, which are dangerous to sugar cane. It would appear, therefore, that sugar beets offer more promise than sugar cane, and it is recommended that during the next few years a thorough study of beet growing in the area be made, using varieties US-56 and US-75 and any others that may show resistance to bolting. These varieties should be planted in August, September, and October, and not in the spring, but a few years' experience will determine the best times of planting and harvesting. On the basis of experience in Egypt, beets planted in the autumn reach maturity in five and one half to six months, and such beets are now being harvested in Egypt at the age of six months, with a sugar content of 17½ - 18%. There is no apparent difficulty that would prevent the obtaining of similar yields in the Basra area, and such yields would, of course, be considerably in excess of the 13% being experimentally obtained in the Mosul area. The latitude of Basra is the same as that of the Delta of the Nile in Egypt, but the fall in winter temperature is lower than Cairo, and these lower temperatures are desirable for sugar beets. It is considered that sugar beets could probably be planted in the Basra area every month from August to December, and harvested at the age of five or six months. This would give a much longer campaign or slicing period than would be possible in the northern area of Iraq. Precautions would have to be taken, however, to ensure that the beets harvested in May during the hot weather would be brought to the factory within two days of harvest. It is therefore suggested that if further tests are satisfactory and the experience gained in Mosul does not reveal unforeseen difficulties, the establishment of a further beet-sugar factory in Basra be considered. This factory would in all probability be able to operate for four or five months each year, but it would be advisable to establish with it a small raw-cane-sugar refinery, as current plans envisage at Mosul. In this case, in addition to the advantage of employing the capital equipment and labor force more intensively, the advantage of location on tidewater would be obtained.

c. Kirkuk

Development Board plans also include the possibility of building a beet-sugar plant at Kirkuk. If the operation of the Mosul plant is successful, plans for the erection of additional plants at Kirkuk and perhaps Sulaimaniya may be considered. The area of irrigated land in the Kirkuk Liwa is considerably larger than that in Mosul and it appears to be comparable to that in the Mosul region. In order to determine more precisely the beet-growing potentialities, a policy of experimental cultivation in addition to agricultural extension and educational work similar to that proposed for Mosul should be carried out. The lessons learned in the irrigation and operation of the beet-sugar plant in Mosul will be of value, and the investigation of beet-sugar possibilities in this Liwa should be by all means continued.

d. Sulaimaniya

From a strictly agricultural point of view, the Sulaimaniya Liwa is undoubtedly the most promising part of northern Iraq. It has considerable rainfall during the winter months, and there is ample irrigation water for the large area of irrigable land. At the moment, however, transportation is inadequate. During the next 10-20 years, the highway system should be improved, so that the excellent Sharasoora Valley can have the transportation it needs for further development. The Valley has excellent loam and clay soils, which are very suitable for sugar beets. Considerable areas of land are available, some of which are not at present cultivated, because of the high transportation cost to Kirkuk, the nearest railway point. Much of the cultivable land is in large holdings, so that it should be possible to convince local land owners of the value of sugar beets as a crop and ensure enough beet acreage to supply a factory within a reasonable period of time.

3. The Refining of Sugar Cane

Plans for the Mosul sugar plant include additional equipment that will permit it to be converted to sugar-cane refining during the period when beets are not available. In most parts of the world, sugar refineries are located in port areas, where the raw sugar can be directly unloaded from the ship to the factory, but special circumstances seem to justify the Board's decision. The additional investment involved seems to be very small, and if the output can be absorbed in the Mosul area, there is no serious transport disadvantage. On the other hand, the advantage of giving year-round employment to the labor force of the beet plant and more fully utilizing at least the equipment that can be converted to refinery use, is obvious. A similar procedure should be considered if a beet factory is established in Basra.

4. The Prospects for a Sugar Industry in Iraq

Agricultural conditions are favorable for growing sugar beets in several regions of Iraq, including the Basra area. There are thus good prospects of success, but they will depend almost entirely upon the promotional and educational work carried out and the farmers' response to it. At present there are too many unknown factors (for example, the price to be paid to the farmers, the average yields, and the operational methods of the factory) to permit reliable estimates of the cost of beet-sugar production in Iraq to be made. However, on general grounds it should not be difficult for domestic sugar to compete with imports that have to bear very heavy transport charges. In any case, if domestic costs are somewhat higher than import prices for the first few years, this must be accepted as an inevitable cost of establishing a sugar industry in Iraq. It should be borne in mind that not only will employment be created and foreign exchange saved, but a new and important agricultural crop introduced.

III. IMPROVEMENT AND DEVELOPMENT OF EXISTING AGRICULTURAL INDUSTRIES

Flourishing industries have already been established in many agricultural fields, and the problem with which this part of the report is concerned is to improve them and to assist them to grow at a faster rate. In many cases it has been found that a far higher rate of development could be attained if Government work already begun were expanded in scope. Frequently, the framework for successful development has been formed, and only a little further effort is required to bring forth many additional benefits. This is also true in the case of many private developments. Successful industries have been established and are now at the point where their expansion and extension into related fields could easily be achieved.

A large number of recommendations are made in this section of the report and it is unlikely that the Development Board would wish to implement them all itself. Nevertheless, the Board's plans for irrigating large areas of land and developing Iraq's agricultural economy demand that immediate steps be taken to expand and encourage industries based on agricultural products. To achieve this end most satisfactorily, the Board should call upon existing financial and Governmental institutions to undertake the necessary measures. The measures can be grouped into four programs:

1. An Agricultural Extension Program.
2. A Capital and Credit Program.
3. A Health and Hygiene Program.
4. A Commodity Grading Improvement Program.

The Board should allocate funds to the various agencies concerned to enable them to carry out these programs. To ensure that the necessary measures are carried out, legal enactment should be sought where it is necessary, and follow-up and inspection procedures should be devised.

A. THE RECOMMENDED PROGRAMS

1. Agricultural Extension

The Agricultural Extension Service of the Ministry of Agriculture has achieved excellent results, and its services will be required on a fairly large scale to secure the success of the new agricultural industries recommended above, particularly the animal-feed and sugar industries. The improvement and growth of Iraq's existing agricultural industries will also make demands upon the services of this extremely important organization. It is recommended that the Development Board make funds available for the following purposes:

1. To extend the present work in improving the quality of Iraq's livestock. Further work is necessary to improve livestock nutrition and to reduce the incidence of diseases that are inimical to the growth of the dairy, wool,

leather, and meat-product industries.

2. To improve the quality and yields of the cotton crop and increase plantings. Iraq's new textile industry is unable to obtain adequate supplies of raw cotton, and planned extensions will aggravate this difficulty.
3. To administer a number of experimental, mobile, cheese-making units. Their successful operation may lead to a substantial extension of the present dairy industry.

2. Capital and Credit

The success of the Agricultural Extension Service Program is a fundamental prerequisite of the further growth and development of the industries based on agriculture. Success in this field is not, however, a sufficient condition for industrial expansion. Further progress will depend on industry's ability to obtain capital, and it is recommended that the Industrial Bank be enabled and instructed to provide financial assistance for the following purposes:

1. The establishment of centralized milking operations.
2. The establishment of equipment to sterilize milk.
3. The establishment of cold-storage facilities.
4. The establishment of a model farm for the cultivation of such oil-bearing crops as peanuts, soybeans, and sunflowers, all of which could serve as raw materials for the expanding vegetable-oil industry.
5. The expansion of the wine industry.
6. The expansion of the ready-made-clothing industry.
7. The establishment of improved slaughterhouses in Baghdad and elsewhere. Mechanized flaying and carcass handling and the building of adjacent hide- and skin-curing centers should be encouraged.
8. The expansion of the leather industry, with the exception of the semitanning segment.
9. The expansion of flour-milling and baking facilities.
10. The establishment of sea-fishing fleets and fish-preparation plants.

3. Health and Hygiene

Improvements in health and hygiene would have important industrial consequences, and it is recommended that the relevant authorities be assisted to initiate the following steps:

1. Improvements in the quality of Iraq's milk supplies, by the introduction of milk inspection and identification. Greater confidence in milk and milk products must be established before expansion in the dairy-products industry will take place.
2. Improvement of slaughterhouse conditions. Iraqi hides and skins have a poor reputation in world markets; it could be improved if more careful attention were paid to hygienic conditions in the slaughterhouses. Meat-product industries would also benefit.

4. Commodity-Grading Improvement

The advance of agricultural industries in Iraq is seriously impeded by the absence of adequate and enforced systems of grading. To ensure the industrial growth of the industries concerned, grading and grading-enforcement procedures are necessary, particularly in:

1. Cotton.
2. Hides and Skins.
3. Grains.

The advice of marketing experts in these fields should be sought and acted upon without delay.

If these four programs are implemented, Iraq's agricultural resources and the industrial activities based upon them will be greatly improved, and important medium- and long-term benefits for agriculture and industry will follow.

It is impossible to calculate the expenditure that they will involve, as this will depend on the rate at which development proceeds and on which opportunities are taken up, but it is considered that the great importance of Iraq's agricultural industries to the economy of Iraq would justify expenditures of up to ID 1 million annually, with substantial increases in later years. These amounts would be exclusive of the investments required in date-product, paper, and sugar industries. A number of further recommendations are offered in this section that are designed to improve specific segments of Iraq's agricultural industries and to facilitate their growth.

B. ANIMAL-PRODUCT INDUSTRIES

1. Introduction

In no other sector of the agricultural economy can effective Government aid provide benefits to as wide a group of dependent industries. Industries directly dependent upon the future development of Iraqi livestock resources include dairy products; animal slaughtering and by-product utilization; production of hides, leather, and leather products such as shoes; woolen textiles; and even the proposed new animal-feed plant.

Estimates of the total number of livestock in Iraq vary widely, but it is less important to establish absolute numbers than to establish whether they are sufficient to produce an adequate basis for an expanding group of animal-product industries. Fortunately, all the estimates that have been made indicate that herds are increasing; nevertheless, Government action to improve both quantity and quality will be necessary to ensure rapid industrial growth in this section of the country.

Animal-based industries provide an excellent example of evolutionary growth and interrelationships among industries. In no other agricultural field is it possible to improve or aid the establishment of so many industries through improving their common base. In addition, many industries resting upon this base are already in various stages of development, and the question is not one of establishing new industries but rather one of improving the framework within

which these existing industries may grow and diversify. The approach to this sector of the agricultural economy should therefore be one of seeking ways and means whereby established industries can be encouraged to increase their own efforts, by Government aid being directed toward the provision of capital resources, the improvement of raw materials, and the provision of technical assistance. In many cases, the Government has led the way with good results, and private enterprise has followed its example. It is considered that Development Board policy should be to initiate a positive program of encouragement, and to establish additional industrial units only if private enterprise fails to do so. In this way a much more effective and pervasive influence upon industrial growth can be assured.

2. Dairy-Product Industries

The dairy industry in Iraq is seriously underdeveloped. With the exception of major population centers, where several small but growing dairies exist, there are no modern dairies, despite the danger to the community's health of the present raw-milk supplies provided by the "peddler" delivery system. The slow growth of the dairy industry, particularly in the north, has been due to a shortage of dairy cattle, a lack of adequate transportation from farm areas to the cities, and in most areas, a failure to appreciate the need for improved milk products.

Baghdad is more fortunate than other municipal areas in that it has several small and growing private dairies and two Government milk-provision programs. A small, Government-operated milk station, with a capacity of 1500 pint bottles of milk per day as well as capacity for butter and cheese production, makes good-quality milk available to schools, hospitals, and commercial establishments. This dairy obtains its milk supply from the Abu Ghraib Experimental Station and other milk producers whose herds are certified and who produce milk under sanitary conditions. The joint UNICEF-Government Dairy, supported by the Development Board, represents a still more significant development. The products of this dairy, which will product 20,000 liters of milk per day (80% sterilized, 20% pasteurized), will be distributed, one third free to children and nursing mothers, and two thirds for sale to the public. It will include milk production and collection centers, indispensible to any modern dairy, and will make available advanced facilities for the technical training of personnel needed to develop dairy operations in other parts of the country. Since this project is the first real attempt to develop a major dairy industry in Iraq, its operation will be of great value as an example to private industry.

It is estimated that a minimum of 100,000 liters of milk per day is consumed daily in Baghdad. As the new UNICEF-Government Dairy, together with the existing dairies, will not supply more than 30% of this minimum, substantial opportunity for the expansion of the dairy industry in Baghdad exists. Development in other areas will be considerably slower than in the major centers, since milk is not generally considered to be a basic and important food product. Here the development of the dairy industry is dependent upon the

creation of new demands for improved dairy products. An opportunity now exists to stimulate these new demands by promotional campaigns, as rising income levels are likely to be reflected in increased consumption of food.

At present, per capita consumption of dairy products is very low in Iraq. In Baghdad it has reached one third of America's average level of 447 lb a year, but throughout the rest of the country it is very substantially below this. Although it would be unreasonable to expect Iraq's per capita consumption to rise to that of the United States, it is clear that considerable increase in the demand for dairy products can be expected to follow increases in income levels.

a. Development of the Dairy Industry

Until comparatively recently, many of the economically advanced countries possessed dairy industries very similar to that in Iraq today. Higher levels of income, urbanization, and the growth of new industrial techniques have been accompanied by the slow evolution of modern, hygienic dairy industries. A similar evolutionary process will in all probability take place in Iraq as a result of improvements in herds and fodder, the growth of transport facilities, the increased use of refrigeration, and many other factors. The Board should encourage and facilitate this process in as many ways as possible. By means of the four programs outlined, the following developments should be brought about as soon as possible.

a. An improvement in the general quality of the milk sold in Iraq. Lack of a basic feeling for cleanliness in milk handling among farmers, together with an equally serious lack of refrigeration, creates serious danger of milk contamination. The most practical method of meeting this problem appears to be through the establishment of centralized milking operations. Centers, located first in villages near major distribution areas and eventually, as transportation improves, in more remote villages, would permit milk gathering under hygienic conditions, provide an opportunity for thorough inspection, and act as focal points for the dairy education of participating farmers. The new UNICEF-Government Dairy includes two such centers as an integral part of the operation. Certainly this project should serve as an outstanding example, and the practice should be adopted at future private dairies. Encouragement of private dairy operations should not be given unless the Development Board satisfies itself that adequate provision has been made for hygienically satisfactory supplies of milk.

b. An increase in the proportion of milk that is sterilized. Sterilized milk can be kept fresh for practically unlimited periods without refrigeration, while pasteurized milk must be kept in refrigerated storage. The advantages of sterilized milk at this stage of Iraq's development are obvious, for example, its ability to be transported long distances in nonrefrigerated trucks and its suitability for households without refrigeration equipment. There is a slight loss in food value through sterilization, but this is not considered a major disadvantage. Dairy owners should be encouraged and assisted to include sterilizing equipment in their plants.

c. An improvement in methods of milk inspection and identification. General distrust of the peddlers' milk has undoubtedly contributed to the consuming public's lack of confidence in milk as a food product. New dairies should prevent identification of their product with that of the peddlers', and should attempt to distribute their products in distinctively marked vehicles.
d. An improvement in the general quality of dairy herds is most important, and the Ministry of Agriculture's plans for this should be endorsed and if necessary given financial assistance.

b. Dairy By-Products

While milk production itself is the basic business of a dairy, planned development of the industry should certainly include increased production of other dairy items. Demand for butter, yoghurt, cheese, ice cream, and other products will increase together with the increased demand for improved milk, and new dairies should plan for their production. Cheese and butter production should be particularly encouraged as a means of utilizing excess milk and butterfat.

While increased manufacture of butter and cheese in dairies can be expected, a special opportunity for operating and expanding cheese making is seen. Seminomadic tribes in the northern and north eastern regions of Iraq have traditionally manufactured a poor-quality cheese from sheeps' milk. Primitive methods of manufacture could be supplanted by extensive establishment of central collecting and processing stations and cold-storage facilities, but a less advanced program, as a practical first step, should be instituted at once. This step would be to introduce the use of mobile cheese-making units to follow the herds. Simple units, consisting of small vats, mixers, and presses, can be employed with a capacity of up to 300 lb of cheese per day. Similar units, operated either in mobile or stationary form, have been employed in other Middle Eastern countries, particularly in Syria.

These units are currently under study by the Fourth Technical Section of the Ministry of Development, and it is recommended that they be introduced as soon as possible. Units should be purchased by the Development Board and a program to teach farmers and herdsmen their proper use should be planned and administered through the Agricultural Extension Service. Even this initial step should permit production of cleaner, better cheese, and will provide higher incomes to those participating in the program as well as pave the way for more comprehensive developments in the future.

The manufacture of powdered milk would provide a market for milk during periods of seasonal oversupply and for quantities that might be in excess of local requirements. This is a development for the future, but domestic demand already exists in the rapidly expanding ice cream industry. Bakeries provide an additional potential market, and export possibilities probably exist. The production of powdered milk would provide additional diversification and might eventually lead to the production of a paint vehicle known as Casein.

3. Slaughterhouses and Meat Preparation

The expansion and improvement of Iraq's leather industries and the growth of meat-preparation industries depend upon a great improvement in slaughterhouse buildings, equipment, and procedures. At the moment animals are slaughtered under conditions that are detrimental to the growth of animal-product industries and dangerous to public health; recommendations designed to improve this highly unsatisfactory situation are offered in the following pages.

Present slaughtering facilities are described in Table 77, which indicates the total animals slain in each Liwa during 1954 and the status of the principal slaughterhouses. Slaughterhouses shown are those located in the major cities in each Liwa; 61 additional slaughterhouses are located in smaller municipalities. Table 77 also shows the daily average number of animals slain in the three selected Liwas of Baghdad, Mosul, and Basra; the maximum number of animals killed daily in each Liwa is about three times the daily average.

The slaughterhouses are owned and operated by the various municipalities, supervised by the Ministry of Interior. They are used by individual butchers, who slaughter their own animals and sell the meat, hides, and animal by-products in local markets. Slaughterhouse inspection is currently carried out by three Government agencies:

a. Municipality inspectors: sanitary conditions.
b. Department of Veterinary Services: meat quality.
c. Iraq Hides and Skins Association: hide and skin quality.

The individual butchers pay no fees for the use of slaughterhouses, although the municipalities are responsible for all maintenance and operating expenses. The present system provides no opportunity for profit to the municipalities and there is little incentive for the provision of improved facilities.

The design of the slaughterhouses is inadequate in comparison with modern standards in other countries. Facilities for cold storage, mechanized carcass handling, handling and disposition of by-products, and improved flaying and hide removal are lacking. This industry should be upgraded and new buildings should incorporate improvements in slaughterhouse design. As it is unlikely that the present individual method of slaughtering will be replaced for many years, new slaughterhouses should provide as great a degree of mechanization, sanitary handling, and by-product utilization as is compatible with it. In attempting to upgrade the industry, considerable improvements in slaughterhouse design should be attempted and repetition of present designs in new construction should be avoided. The fundamental problem in planning new slaughterhouses is to design a system compatible with the present individual method of slaughtering, and at the same time to provide as great a degree of mechanization, sanitary handling, and by-product utilization as possible. In addition, the design must be such that further mechanization can be added as the present slaughtering system evolves more closely toward the Western method of slaughterhouse ownership of livestock and distribution of meat products.

Although the proposals in this report are in line with the present

TABLE 77

LIVESTOCK SLAIN AT SLAUGHTERHOUSES OF IRAQ, 1954, ACCORDING TO LIWAS

LIWA	CAMELS	BUFFALOES	COWS	GOATS	SHEEP	DESCRIPTION
Baghdad	162	5,283	37,656	150,669	540,221	3 old Slaughterhouses
Mosul	52	234	15,173	77,150	1,255,000	1 old Slaughterhouse
Basra	26	1,684	20,827	2,606	86,321	1 new Slaughterhouse
Amara	85	1,281	9,854	2,486	18,891	1 built in 1951
Muntafik	49	673	8,739	1,856	25,047	1 built in 1949
Diwaniyah	133	488	10,565	4,437	42,120	1 old slaughterhouse
Hilla	45	580	8,699	6,946	44,800	1 built in 1949
Karbala	1,694	1,343	8,555	5,252	66,883	1 built in 1951
Delaim	319	665	5,915	6,438	32,278	1 built in 1951
Dialah	2	56	3,462	22,975	44,622	1 built in 1953
Arbil		40	2,605	29,076	22,455	1 old slaughterhouse
Kirkuk		6	5,888	50,567	80,771	1 new (not completed)
Sulaimaniya		44	2,258	47,201	25,677	1 old slaughterhouse
Kut	18	49	8,326	15,529	23,281	1 built in 1953
GRAND TOTAL	2,585	12,416	148,562	423,188	1,198,867	

DAILY AVERAGE NUMBER OF ANIMALS SLAIN IN THREE SELECTED LIWAS

	Baghdad Liwa	Mosul Liwa	Basra Liwa
Sheep	1500	348	240
Cattle	105	42	58
Goats	418	214	7
Water Buffaloes	15	2/3	5
Camels	1/2	1/6	1/12

situation, it is recommended that serious consideration be given to the introduction of more effective methods. The encouragement of butchers co-operatives might lead to their operating municipal facilities or building their own modern slaughterhouses. A recent development in Turkey is worthy of note. An autonomous Government agency, Etvebalik, owns and operates two slaughterhouses and has two others under construction. The organization purchases all livestock slaughtered, and this centralized handling permits the installation of completly modern, mechanized slaughterhouse facilities. Etvebalik maintains 70 refrigerated railway cars and a fleet of refrigerated trucks for meat distribution, operates an extensive department for by-product processing and sale, and is considering the establishment of retail outlets. As the new slaughterhouses have come into operation, local slaughterhouses, of the older type, have been closed down. New constructions in Iraq should be designed so that they can eventually be operated by a centralized organization.

It is the purpose of this section of the report to indicate the need for new slaughterhouse facilities and the opportunities for industrial advance that they would provide. Detailed specifications for new constructions are not,

therefore, offered, but observations on the type of facilities that are necessary and their costs and methods of operation are made in the following pages, to assist the Board to improve this important section of the economy.

It is recommended that a single modern slaughterhouse, of a capacity large enough for Baghdad's needs, be planned and erected immediately. This building should serve as a model for additional slaughterhouses, which should first be constructed in the major centers listed in Table 77, beginning with replacement of the oldest, and eventually in all cities where inadequate facilities exist. It is further recommended that a firm of engineers competent in the field of slaughterhouse design and management be appointed. They should develop designs for construction of a new slaughterhouse in Baghdad and should prepare a long-range construction plan for similar slaughterhouses in other cities. Ways and means of encouraging the growth of meat-packing and by-product companies should be examined, and they should recommend facilities for the processing and sale of by-products. In addition, the consultants should be prepared to provide competent plant management to train local employees and to demonstrate experimental equipment. Finally, the firm should assist in setting up overseas training programs for selected future employees.

The fundamental considerations in the construction of this first slaughterhouse should be:

a. That the design be such as to permit continued operation of the present individual butchering system, although providing the means for increased mechanization of operations as the slaughtering and meat-preparation industry becomes more centralized.
b. That the design be such as to permit adequate means of training for both butchers and slaughterhouse attendants.
c. That adequate means of securing a profit for the slaughterhouse operation, whether public or private, be secured.

Slaughterhouses in which the owner of the animals performs his own slaughtering are found in many countries and a certain degree of mechanization is provided through the installation of simple, labor-saving equipment. This equipment is adequate to handle all species of animals, by standard methods widely used in the United States and Europe. This type of installation with a crew of trained butchers substantially reduces the labor cost of slaughtering. The owner of the animals pays a slaughtering charge and retains the carcass, hides, skins, edible offal, and any other commercially valuable residue. Such products as blood, heads, feet, hoofs, and certain parts of the viscera are given to the slaughterhouse operators for conversion into bone meal, animal feed, or fertilizer. The numerous slaughterhouses throughout the world that operate on this principle are known as custom slaughterhouses, or in some cases, municipal abattoirs.

It would undoubtedly be a serious error to introduce completely mechanized methods of slaughtering animals in Iraq at the moment, but a small experimental mechanized installation should be built for demonstration and training purposes. New slaughterhouses should be designed to contain a simple type of equipment for the demonstration of advanced methods of slaughtering

large and small animals. The slaughtering room should also be designed so that it could be converted into a completely modern operation at the time that the training of butchers is completed.

The use of refrigeration to preserve all types of food products should also be encouraged in Iraq, and the design of the new slaughterhouse should include a small installation that would permit meat to be refrigerated for from six to eight months. Carcass meat could be placed in the freezers during the period when slaughtering is heavy, and removed in slack seasons. This type of arrangement could be made available at a small charge to butchers, and would permit a more even distribution of meat and meat products throughout the year. The butchers can be expected to make little use of cold storage at first, but its use would grow as the economic advantage of cold storage for fresh meat products reserved for the army, police, hotels, restaurants, and other large customers becomes apparent.

By-products from the slaughtering operations that could be used for industrial purposes include:

1. Fertilizer, produced from rendering operations. Alternatively, meat scrap could be produced from condemned organs and carcasses and sold as an animal-feed ingredient. (See Appendix, Section III-F-7.)
2. Dried blood. The collection and drying of blood would make available a high-protein product, which could also be sold for use in animal feeds or fertilizers. (See Appendix, Section III-F-7.)
3. Manure. This product can also be dried, converted, and sold as a dried fertilizer material.
4. Tallow and grease. These residues from slaughtering operations can be stored and sold for soap making.
5. Sausage casings from sheep intestines. At present, various concessionaires purchase, prepare, and export sausage casings under extremely crude conditions. Exports have averaged ID 171,770 annually over the past five years. Provision of modern cleaning and handling facilities would provide this important by-product industry with an opportunity to expand.
6. Inedible by-products, hides, and skins. Sale of these items is currently conducted by the individual butchers, and it is assumed that this practice will continue in the future. Slaughterhouse management should handle the utilization and sale of all inedible by-products, with the exception of hides and skins. It is considered that arrangements can be made whereby by-products can be processed and sold to private firms. Profits from this type of slaughterhouse operation should be in excess of all normal operating costs and could be used to defray expenses. Any excess could be returned to the individual butchers, either by keeping slaughtering fees to a minimum or by direct profit sharing.

For the larger slaughterhouses, two slaughtering floors are recommended—one for cattle, buffalo, and camels, the other for sheep and goats. Each floor should be large enough for the maximum slaughter by individual owners. Considerable floor area will be required, since the average daily kill is only one third of the maximum slaughter in a peak season. For calculation

purposes, it has been assumed that peak-season kill is performed in a daily 10- to 12-hour operation, and that the average kill takes place in four to six hours. On this assumption, the Baghdad plant should contain one killing floor for 350 large animals per day, and one killing floor for approximately 5700 sheep and goats per day. This would indicate an hourly slaughtering rate of 35 large animals and 570 sheep and goats during the peak killing season. At the end of the two killing floors an experimental installation should be placed that would handle 10 large animals per hour and 100 sheep per hour. The equipment arrangement should not exceed ID 11,000 installed, and would find its principal use in demonstration during the off-peak season.

Standard slaughtering equipment for cattle on the main floor would be a simple triple-hoist operation, without conveyor. A small conveyor would be suitable for sheep and goats, together with a viscera-inspection table that could be enlarged to handle 600 sheep per hour. As an alternative, two conveyor and table installations could be introduced, with a capacity of 300 sheep or goats per hour each. The latter arrangement would provide flexibility in operation.

The cost of a slaughterhouse of this kind, sufficiently large to handle Baghdad slaughtering requirements, would be approximately ID 360,000. This would include the central plant with ample facilities for inspecting and holding livestock; two killing floors and the experimental installation; space for separating and washing all edible offal and casings; a modern rendering or by-product-processing building; a separate one-story building for carcass storage that would include cold-storage and freezer space; auxiliary facilities such as an employees washroom, a repair shop, a laboratory, and an administration building; and all necessary equipment required for slaughtering and by-product preparation.

A similar plant, although on a smaller scale, should be installed at Mosul. Based on the figures in Table 77, facilities would be required to kill 562 sheep and goats and 43 cattle, buffalo, and camels on a basis of a six-hour daily kill. A 10-hour maximum daily kill would require space for 1689 sheep and goats and 129 larger animals. In this case only one killing floor would be necessary. This smaller plant, which would also include an experimental equipment installation, cold-storage and freezer space, and by-product-processing equipment, would cost an estimated ID 150,000.

All cost estimates are based on the assumption that the plant would be completely convertible to modern, mechanized operation. This involves more costly construction than would be necessary for a nonconvertible plant. An estimated saving of 10% on the above estimates could be made if no consideration were given to eventual complete modernization. The estimates do not include provision of modern curing yards and facilities for hides and skins, which are discussed in the following report section. Layout drawings for the proposed Baghdad and Mosul plants have been submitted to the Board.

4. Leather and Leather Products

Substantial opportunity exists for expanding and improving the

production of hides, skins, leather, and leather products. The industry, which is of considerable present and potential importance, consists of two segments:

1. A large number of facilities that prepare cured, pickled, or semitanned hides largely for export markets.
2. Less than 10 relatively modern tanneries that prepare finished leather for the domestic shoe industry and other markets.

The relative importance of these two segments may be judged from the fact that exports of cured, pickled, and semitanned skins have been at a rate of approximately ID 350,000 annually for the past three years, while tannery sales to domestic industry have been approximately ID 1 million.

The normal flow of materials is as follows:

1. Livestock are taken from grazing areas to local slaughterhouses by butchers. Resulting hides and skins remain the property of the butcher and are disposed of by him.
2. Hides and skins are delivered by the butcher to one of the number of commission merchants who undertake to cure and sell them for a 1% fee.
3. Semicured and cured products are either purchased by a tanner on the basis of personal selection or remain in the hands of the merchants. The latter may export them or sell them locally in cured form or may semitan them in their own tanneries, exporting them in this form.
4. Shoe factories and other leather users obtain the bulk of their material from domestic tanneries, but they normally import additional quantities.

The efficiency of this important industry is impaired and its development hindered by a number of serious difficulties. Its natural growth would proceed at a faster rate if Government action could be secured in the following fields:

1. Nutrition of livestock. Countries in Iraq's position have traditionally had difficulty in up-grading the quality of livestock. The Government's long-range program for improving both cattle breeds and forage will greatly improve the quality of hides and skins, but more intensive work in this field is desirable.
2. Livestock diseases. Diseases and insect infections cause serious skin blemishes, which eventually appear as defects in finished leather and thus decrease its value. Veterinary authorities are facing this problem, but more extensive work needs to be done.
3. Careless and faulty flaying. Permanent damage to hides and skins as a result of improper slaughtering methods and defective curing techniques causes an estimated 25% loss in the value of hides and skins. Such economic waste is due to lack of skill on the part of the butchers and commission merchants, and to a lack of proper facilities in the slaughterhouses.
4. Drying, curing, and storage of hides and skins before sale. There is general agreement that merchants who purchase hides and skins from butchers pay far too little attention to proper curing methods. Present techniques are unsanitary, crude, and in some cases, dishonest. Bacterial decomposition and other defects are the inevitable result and contribute a great deal to the present poor quality of Iraqi leather.

5. Leather tanning. Some improvement in techniques is desirable, but the industry can be expected to accomplish this itself if the quality of its material can be improved.

a. Development of the Industry

Iraqi tannery owners claim and shoe manufacturers confirm that current supplies of domestic leather are inadequate for present needs, that Iraqi leather is inferior in quality, range of finishes, and colors to imported leather, and that it is generally more expensive. Typical prices of Iraqi and imported upper leathers are shown below.

TYPE OF UPPER LEATHER	PRICE (FILS PER FOOT)
Iraqi	130 - 160
Indian	70 - 120
Lebanese	120
Egyptian	100 - 140
European	150 - 200
American	150 - 200

Since the domestic shoe industry is the largest consumer of tanned leather in Iraq and can be expected to grow substantially in the future, it is in the best interest of the tanning industry to modernize and expand production to meet its needs. The tanners recognize this situation and are moving to meet it. Again, Government action seems to be unnecessary.

The preparation and export of cured, pickled, and semitanned skins is more widespread and far more backward than the leather-tanning segment of the industry. Exports have been declining for some years, from ID 289,746 in 1952 to ID 197,457 in 1954, but it is believed that they could be raised to far higher levels if it were not for the poor reputation Iraqi hides and skins hold in world markets. For example, the leading U.S. tanner has found Iraqi semitanned sheepskins inferior to others imported (both in respect to butchering procedures used and in the type of tanning). This tannery has to remove as much of the tanning as possible before it can process the leather. Sulaimaniya-type cured goat skins, which sell on world markets at a price less than one third of the price of Indian skins, reflect this serious inferiority.

This section of the industry needs considerable improvement, and the provision of technical assistance by the Board would be of great value. Pickled sheepskins are recognized as an important commodity in international trade, and trade in them is 20 times greater than the trade in semitanned sheepskins. Unless Iraqi producers of semitanned skins are willing and able to make drastic improvements in their processes, it is recommended that they increase their production of pickled skins in preference to semitanned skins. A shift to pickled skins could do much to restore the reputation of Iraqi skins in world markets, and when semitanning techniques have been properly learned, it may again be possible to produce this more advanced product for export. This sec-

tion of the industry may be in danger of being supplanted by the establishment of modern, competitive facilities for the production of semitanned skins. At least one modern tannery has indicated its intention of installing equipment to produce semitanned skins for export. This development, which in all probability will be followed by others, may lead to the up-grading in Iraq's leather exports.

To assist the leather industry to expand and improve the quality of its products, Government action should proceed along three main lines:

1. The various livestock improvement programs and the work of the Veterinary Department in checking disease should be encouraged and increased. The benefits of an increase in effort in this field would influence not only the leather industry but also the meat and dairy industries. Higher livestock standards required by the growing dairy industry provide an additional reason for such work, and the future location of dairy herds adjacent to milk-collection stations should facilitate its being carried out.
2. Specific Government action is required to improve slaughterhouse facilities and the conditions under which the subsequent handling and sale of raw hides and skins are carried out. In preparing designs for the slaughterhouses, consulting engineers to the Development Board should make certain that building designs and equipment specifications provide for adequate space for slaying and mechanical flaying. Current, nonmechanized practice does not permit hoisting of the carcass and subsequent removal of the hide without damage. Simple mechanical devices, such as hoists, can be procured which would eliminate this problem, and the training of butchers in proper flaying techniques should be carried out. In addition, the slaughterhouses should include adequate facilities for the inspection and handling of hides. Detailed suggestions along these lines have been made by an FAO expert working with the Hides and Skins Association. Proposals for instituting systems of inspection, grading, and greatly improved flaying methods have been made and should certainly be taken into account when new slaughterhouses are designed. It is considered that the degree of mechanization required to achieve improvements in the handling of hides and skins is in no way incompatible with the present system of ownership.
3. Substantial improvement is required in present methods of curing and selling hides and skins. Present materials, initially inferior, are further damaged by the treatment they receive after slaughtering. It is recommended that in planning the details of the slaughterhouse program, allowance be made for the establishment of modern curing centers located adjacent to the slaughterhouses. Such curing centers could include facilities for storing and curing hides under sanitary conditions, and could be operated under the technical supervision of the Hides and Skins Association. The FAO study has revealed that many private hide and skin merchants are interested in improving the present arrangements and could be encouraged to construct and operate their own curing center provided that land is supplied close to the slaughterhouse. This possibility should be further expanded with the help of the Hides and Skins Association, but in any case, the Government should

plan their construction. FAO reports to the Hides and Skins Association again supply detailed information. Should it become necessary for the Government to construct the centers, income could be provided by leasing space in the centers to the various commission merchants who control the business. It is also believed that when an adequate system of grading and curing hides is established, it should be possible to abolish the present system of purchasing by weight and replace it with a system of purchasing by number and quality, as practiced elsewhere. In fact, such an approach is inherent in a grading system and will of itself supply incentive, not only to the merchants, but to butchers, to improve their procedures and products. The Hides and Skins Association should take the lead in establishing such a system as soon as modern facilities have been provided.

b. Relation to the Domestic Shoe Industry

The leather industry can not be considered apart from the domestic shoe industry, which at present constitutes the chief market for tannery products. The shoe industry is well established, progressive, and expanding, but its further growth will be hindered unless it can obtain larger supplies of improved leather in wider selections at somewhat lower prices.

Shoe manufacturing in Iraq takes place in more than 1000 small establishments and in 10-15 larger factories, which employ from 25 to 300 workers each. The growth in output can be judged from domestic leather shoe consumption, which rose from an estimated 300,000 to 350,000 pairs in 1930 to approximately 960,000 pairs in 1953, and between 1 million and 1.2 million in 1954. Annual imports have been very small, providing little more than 3% of domestic consumption in recent years.

While total growth has been impressive, the industry has by no means reached maturity. Annual consumption of shoes in Iraq amounts to only 0.2 pair per capita, as compared with 3.5 pair in the United States. Growth in demand in Iraq has been irregular and has taken place mostly in the larger cities, but as income levels rise, it can be expected to rise throughout the country. Consumer education may be required, but it is not unreasonable to assume that per capita consumption will rise to at least 1.0 pair over the next few years. This would require, in turn, a 500% to 600% increase in shoe manufacturing and consequently, in the production of leather. Shoe manufacturers, both large and small, point out that they are unable to satisfy all the requirements from local sources, because of limitations in quality, range of colors, and in some cases, the higher cost of Iraqi leather. They admit that this may be due largely to the relative newness and inexperience of modern Iraqi tanneries as well as to inadequacies in hides and skins. While conditions in the leather industry can be expected to improve in the future, it is considered that freer competition from foreign leather should be permitted. Increased competition would provide a strong incentive to local tanneries to improve their techniques. At the moment, shoe manufacturers can import less than 10% of their requirements; while the Government should make every effort to follow the recommendations made for improving leather raw materials, it is

further recommended that import restrictions be lifted somewhat in order to force tanneries to provide the necessary improvements. Certainly some assistance to new industries, such as modern tanneries, is neceesary, but protection to the extent of reducing the incentive to improve is economically undesirable.

Import restrictions on leather shoes are also severe. The import quota was raised from ID 60,000 in 1953 to ID 100,000 in 1954, but further quota increases should be considered. Shoe manufacturers, as well as those in other "style" industries, need the stimulation of competition in order to maintain and improve both quality standards and shoe styling. Several shoe manufacturers have commented on this necessity and it is considered that quota increases would be beneficial.

c. Shoe Industry Expansion and New Products

The shoe industry is fully aware of the large potential market for its products and for the most part is taking the necessary steps to expand and modernize production facilities. While overcapacity, in the true sense, does not exist, the nature of the industry is such that present capacity can readily be expanded to meet increased demand. There is no real need for Government aid to the shoe industry except as described above. Of course, the ready availability of capital would be as valuable here as in other parts of the economy.

An interesting development has taken place in the consumption of another shoe product, rubber and canvas shoes. Imports increased rapidly in 1953 and 1954, amounting to 195,978 pairs in the latter year. This is nearly four times the 1952 imports and it illustrates the great increase in public demand for low-cost footwear. While rubber shoes are produced primarily for sport wear, it is believed that the great majority of those sold in Iraq are purchased by people to whom the low cost means an opportunity to own a pair of shoes.

An example of the shoe industry's readiness to expand capacity to meet increased demand is seen in its quick response to the rising imports of rubber shoes. One major leather shoe manufacturer has increased production of rubber shoes from a fairly low level in 1953 to an amount slightly exceeding the 1954 imports. Further expansion of production is contemplated, and at least one other manufacturer has plans for producing rubber shoes in the near future. The shoe industry is by no means slow to respond to market demand, and in the future can be counted on to fulfill its role as a leading example of modern industry.

C. GRAIN-STORAGE, FLOUR-MILLING, AND BAKING FACILITIES

Development of grain-storage facilities, additional flour mills, and modern bakeries is well under way in Iraq. The evolution of grain-based industries has been such that establishment of additional plants should not be of direct concern to the Development Board at this time. There remain opportunities for increased production of flour and bread, but both Government and private plans are being advanced to meet this situation.

Present and proposed Government silo capacity is summarized in the following table:

CITY	CAPACITY (tons)	STATUS
1. Baghdad	5,000	In use.
2. Baghdad	5,000	Planned.
3. Baghdad	11,200	Constructed, to be in operation shortly.
4. Basra	56,000	Being designed.
5. Mosul	10,000	Proposed.
6. Arbil	3,500	Proposed.
7. Hilla	3,500	Proposed.

This capacity is in addition to existing Government grain-receiving stations and to several privately owned silos, either under construction or planned. Government construction of additional modern silos is also under consideration. While the increased availability of modern grain-storage facilities will be of great benefit to the industry, it is of equal importance that the need for an adequate system of grain grading be recognized. Such a system is badly needed by the industry, since it would establish a firm basis for grain pricing and permit farmers to store grain in silos withou fear of being returned grain of inferior quality. In addition, it would greatly aid the flour industry by assisting it to produce more standardized grades of flour. It is desirable that legislation to permit establishment of such a system, proposed by the Minister of Economics, be approved in the near future.

There are seven modern flour mills in Iraq, five of which are located in Baghdad, one in Basra, and one in Hilla. In addition, a new private flour mill is being planned for Mosul. Capacities range from 50 to 100 tons of flour per day. There are also a number of smaller, older mills, with daily capacities ranging up to 25 tons, located throughout the country. Government stimulation of this industry is provided by the operation of three of the larger mills and 18 of the smaller by the Department of Supply, to produce flour for the Government bread program. Expansion of the bread program is being hindered by a shortage of adequate flour supplies, but this shortage, together with increased demand for flour from modern bakeries now being planned or constructed, should stimulate the building of new capacity. Again, direct Development Board participation does not appear to be required, although requests for funds for this purpose should certainly be given consideration.

In Baghdad, expansion of modern bakery facilities has recently taken place with the opening of a new bakery at a cost of ID 130,000. This facility is owned by the Baghdad Municipality, the Industrial Bank, and the public-25%, 25%, and 50%, respectively-and has an initial capacity of 50 tons of bread per day. Baghdad's estimated daily bread consumption is 400 tons, 50 tons of which is supplied by a total of 85 small bakeries, an additional 50 tons by the new bakery, and the remainder by bread baked at home. It is clear that substantial opportunity exists for the establishment of additional capacity in Baghdad alone, if the preference for home-baked bread is supplanted by both the desire

and the ability to pay for improved bakery products. As income levels rise, this demand will undoubtedly increase, and private enterprise should respond by construction of additional bakeries. Similar opportunities exist in other cities, and as demand evolves, new bakeries should be established.

An additional stimulant to progress is seen in a recently announced Government program. The Department of Supply has purchased, at ID 7000 each, 10 semiautomatic bakeries with an individual daily capacity of 15 tons. These bakeries will be installed in Baghdad, Mosul, Kirkuk, Arbil, Sulaimaniya, Hilla, Kerbala, Najef, Nazara, and Basra, and should make available quality bakery products at competitive prices. The establishment of these new bakeries will be an example to guide and encourage the industry to build additional modern bakery facilities.

D. VEGETABLE OIL AND SOAPS

The Iraqi vegetable-oil industry includes two well-equipped private plants, which produce a broad line of vegetable oils, soaps, and by-products. There are, in addition, several smaller plants, which manufacture soap. Current annual domestic production, including both edible oils and fats, such as synthetic ghee, is in the 7000-ton to 7500-ton range. Soap, derived from domestically produced vegetable oils and small amounts of imported fatty acids, is currently being produced at an annual rate of approximately 7000 tons. This domestic production contrasts with 1954 imports of 3500 tons of vegetable ghee and 750 tons of edible oils. An additional 750 tons of edible oils were imported but were reprocessed rather than sold directly. During the same year 4569 tons of soap were also imported. However, 1954 vegetable-oil imports were abnormally high, due to a reduction of the import duty on ghee. Recent increases in the import duty, as well as rising domestic production, should reduce future imports considerably. A current estimate of the amount and sources of Iraqi consumption of fats and oils is summarized as follows:

Product	Amount (tons)	Source
Edible Oils & Fats	7,000	Domestic production. Includes further processing of 750 tons of imported edible oils.
Soap	7,000	Domestic production.
Ghee	3,500	Imported.
Soap	4,569	Imported.
Edible Oils	750	Imported.
	22,819	

Iraq's *per capita* consumption of fats and oils is 4.3 kilograms per year. This compares with the world average of 10 kilograms, the U.S. average of 30 kilograms, and an estimated Egyptian average of 7.08 kilograms. Clearly, the Iraqi vegetable-oil industry may achieve considerable future growth.

Domestic markets for vegetable oils and fats are expanding slowly by about 5-10% per year. This fact, when considered in relation to present capacity, makes the establishment of additional plants at this time economically unattractive. The industry is currently operating at well below 50% of capacity. Adequate facilities exist for annual production of an additional 12,000 tons of vegetable oil and ghee, and an additional 4500 tons of soap. Minor equipment modifications and additions, at a cost of far less than that of a new plant, could further raise capacity to a level four times that of present production. Therefore, Development Board interest in constructing additional facilities cannot be recommended at this time.

I. Development of the Industry

A major hindrance to normal expansion of the industry has been limited supplies of domestic raw materials. Current production depends to a great extent upon supplies of cottonseed, although domestic sesame and flaxseeds are also used. One company reports that its present capacity could absorb five times more cottonseed (which yield 20% oil) than it is presently processing. It has not been able to obtain additional supplies, because of cut-backs in the cotton crop. Were it not for such limitations, production would have reached a much higher level. One of the most important contributions the Government could make to the future of the industry would be to secure for it a stable and assured supply of raw materials. Cotton production, after a decline from 26,000 tons in 1951 to an estimated 9000 tons in 1954, is expected to increase again next year. Government introduction of insecticides to combat the spiny boll worm is of major importance, and this action, together with flood control programs, should remove the farmer's two worst fears and result in greatly increased cotton yields in the future.

Major producers of vegetable oils and fats, such as Unilever and Proctor and Gamble, have established large plantations in various parts of the world in order to assure themselves of a stable source of raw materials. It is recommended that steps be taken to establish a model farm in Iraq for similar purposes. Such a farm would devote itself to the cultivation of peanuts, soybeans, and sunflowers, all of which are high in oil content. All three commodities have been grown on a small scale in Iraq, but have not progressed, because of hitherto limited markets. Establishment of a farm of this kind would, in addition to serving as a raw material source, accomplish the following:

1. Serve as an additional means of demonstrating modern farming methods to nearby farmers and also provide them with an incentive to grow these new crops themselves.
2. Serve as a channel for new-crop introduction into Iraq, and provide a means of broadening the agricultural base of the economy. This aim is entirely consistent with both the Development Board and the Ministry of Agriculture policies.

It is known that at least one of the major vegetable-oil companies is interested in undertaking such a scheme, but that it has been hindered by

lack of capital. It is recommended that the Board examine this possibility and consider making funds available through the Agricultural or Industrial Bank.

Raw material supplies could be further increased through the utilization of domestic oil-bearing materials not now being processed. Rice bran is considered a distinct possibility; oil yields from rice bran range from 13% to 15%, and experiments conducted in Iraq have indicated that extraction is feasible although certain technical problems remain to be solved. While analysis of raw material supplies for this process has not been made, it is probable that the industry will eventually be able to process rice bran in addition to present raw materials.

2. By-Products of Vegetable-Oil Industry

Present industry operations can be expected to absorb wider varieties of raw materials and produce a growing number of new products. In this area a substantial contribution to the future of the industrial economy may be seen. New or increased production of the following commodities can be expected:

1. Vegetable oil from date stones. As explained in the section on the Industrial Uses for Dates, date stones contain 8-9% oil. This oil can be processed and sold, but it is not commercially attractive at present price levels. Date stones can be purchased at ID 5 per ton, but unless the process residue can be sold for ID 3 to ID 4 per ton, the operation would not be profitable. As there are large quantities of surplus dates available in Iraq that are completely wasted, it would appear that Government action to reduce the price of date stones for this purpose would assist both the date farmers and the vegetable-oil industry.
2. Cottonseed cake. At present, the largest company in the industry produces 5000 tons of cottonseed cake annually, but its capacity is sufficient for three to four times this output. Of present production, 30% i sold in Iraq as cattle feed; the remainder is exported for the same purpose. (See Appendix, Section III-F-7.) The company's management anticipates that, pending the development of the domestic cattle-feed industry, increased production would have to be exported. Cottonseed cake and sesame meal are important ingredients in superior animal feeds, and their use for this purpose should certainly be promoted. For this and other reasons it is recommended elsewhere that one of the leading vegetable-oil companies be invited to establish and run the proposed animal-feed plant, under contract to the appropriate Government agency.
3. Detergents. Iraqi detergent imports in 1954 were 471 tons—more than 10 times the imports in either of the previous two years. Detergents have become very popular in many other countries; in the United States, 60% of the laundry-soap market has been captured. A substantial potential market exists in Iraq, and one company is proceeding with plans to install 1000 tons' annual capacity. Additions to this may be expected from other sources.
4. Furfural. This chemical, used extensively in the manufacture of nylon, can

be produced from cotton husks. Unfortunately, current supplies of husks are too small and irregular to justify the erection of a plant of minimum economical capacity. As the vegetable-oil industry grows, it can be assumed that production of furfural will become feasible and that facilities should be established.

5. Potassium carbonate. This chemical can also be produced from cotton husks, but its production awaits the development of domestic and industrial markets and a more assured supply of raw material.
6. Oxygen. Electrolysis of water to produce hydrogen for use in the hygrogenation of vegetable oils also produces oxygen. This product, previously discarded, is bottled by the two major vegetable-oil companies and sold for welding purposes. An estimated 350 to 400 cylinders per day will eventually become available to the metal-fabrication and construction industries.
7. Glycerin. This industrial chemical is a by-product of the soap-making process. An estimated 250 tons a year is produced. At present, this is sold in world markets, but it may eventually be of great importance to Iraq's future chemical industry.

E. TEXTILES OTHER THAN RAYON

During recent years Iraq's textile industry has expanded considerably. The spinning and weaving of cotton and wool has become an important industry and Iraq's dependence on foreign supplies has been greatly reduced. The Mosul Textile Plant, at present under construction, will make a substantial addition to domestic capacity. In another section of this report a recommendation is made to establish a rayon industry. Although these developments will not make Iraq independent of foreign supplies, further expansion in this direction should not be immediately contemplated.

1. Cotton Textiles

Iraq's consumption of cotton textiles, amounting to approximately 51 million square meters in 1954, seems to have fallen slightly in recent years, largely because of competition from rayon. Average imports for 1953 and 1954 were 37 million square meters, in comparison with 54 million square meters in 1950. Present domestic production of about 14 million square meters, primarily of coarse fabrics, has been to a large extent responsible for this fall in imports. In addition, the Mosul plant will product 18.5 million square meters of medium-count fabrics. This will leave a balance of about 18.5 million square meters to be imported, of which about 4 million square meters are fine-count fabrics and the remainder both coarse and medium.

It might, at first sight, seem desirable to increase the domestic cotton textiles production capacity, particularly for fine-count cotton fabrics, since they are not, at present, scheduled for production in Iraq. However, an investigation of this possibility indicates that it would not be worthwhile. Imports of fine-count cottons have averaged only 3 million to 5 million square meters annually during the period, 1950 - 1954. The consumption of this type

of fabric will probably continue in this range since it is a "luxury" item among cotton fabrics, and as such will find only a limited market in Iraq.

With the small market for fine-count cotton goods, the variety of styles, colors, etc., that could be provided by a textile mill would be limited. To produce economically a given design or color requires long production runs; a wide variety of designs could be provided only at a very high cost. At the present time, Iraq can import fine-count cotton fabrics from a number of countries and can select them from manufacturers who are producing extremely large quantities of various styles at low costs.

The production of fine-count cotton fabrics requires the use of extra-long-fibered cotton, which is unavailable in Iraq and has to be imported from Egypt. In addition, production requires a considerably higher degree of textile skill than is necessary for coarse or medium-count fabrics. A proposal now before the Board recommends the manufacture of fine-count cottons in conjunction with the production of rayon fabrics, but it is not endorsed by Arthur D. Little, Inc. The production capacity would be better devoted to the manufacture of rayon fabrics.

Fine-count cotton yarn can be produced in a rayon-spinning mill, but the ease of production will depend upon the type of rayon yarn for which the plant is designed. If coarse and medium-count yarns are being produced, expensive alterations of equipment are required to permit production of fine-count yarn. In view of the fact that industrially underdeveloped countries that are installing textile mills usually try to produce coarse and medium-count fabrics, which generally constitute about 90% of the market, it is undesirable to make the expensive alterations to produce fine-count yarn.

Increased production of coarse and medium-count goods is not recommended, for the following reasons:

1. Further Government ventures in the textile field should not take place until experience has been gained in the Mosul textile plant and the proposed new rayon mill.
2. There is already a serious shortage of skilled textile workers in Iraq, and present plans will aggravate this situation.
3. Fairly substantial imports of textiles are necessary to provide an adequate variety of designs and qualities and to ensure competitive conditions.
4. Private interests may enter the industry if a reasonable share of the market is available for them. Further Government-sponsored textile factories would probably discourage private investors from entering this field, which is particularly suitable for small and medium-size private operation.

Development Board action in two other directions is, however, necessary. The present cotton crop is inadequate in quantity and poor in quality. Government plans to increase the amount of irrigated land to provide flood control and to support insecticide programs will probably increase the area planted and improve yields, but further action is necessary. A careful study of cotton requirements and availability should be made and the assistance of the Agricultural Extension Service enlisted to ensure increased plantings. Acreage subsidies and price guarantee programs may also have to be considered.

An improvement on the quality of the crop will be necessary if a flourishing textile industry is to develop. Satisfactory machine operations require standard lengths of cotton fabrics; when they vary even within bales, as they do in Iraq, operating efficiency and product quality suffer. In this, as in several other important cases, properly enforced grading procedures are a prerequisite of industrial efficiency.

Very great increases in production and improvements in the quality of cotton have been achieved by the Gezira Cotton Scheme in the Sudan, by cooperation between the government, the Cotton Board, and the farmers. This scheme was designed to suit conditions in the Sudan and would not necessarily be suitable for Iraq, but it demonstrates very clearly that cotton production can be expanded and improved in a comparatively short time. It is suggested that the Development Board carefully study the lessons of this very successful project.

2. Wool Textiles

The domestic consumption of woolen textiles is very small. In 1954 it amounted to only 2.5 million square meters, of which 1.75 million square meters was imported. Military clothing, blankets, and suit materials account for a large portion of the total sales of woolen goods. Substantial increases in demand for these or other items in excess of current ability to supply are not likely during the next few years.

The large proportion of imports suggests that an opportunity to expand domestic production exists, but further examination casts serious doubts on its prospects of success. Distributors and consumers have very strong preference for foreign-made cloth which the low prices offered by local manufacturers have done very little to reduce. Improvements in the quality of woolen products have taken place, but a substantial reduction in the preference for foreign cloth has not been achieved.

Expansion possibilities are clearly limited because of demand considerations, and considerable overcapacity provides a further justification for refraining from investing Development Board funds in this industry. Iraq's larger mills are operating at about half of capacity at present; substantial increases in demand could easily be met from present plants.

As in the case of cotton, domestic supplies of raw wool are of poor quality and adequate grading procedures do not exist. Government livestock-improvement programs are likely to lead to substantial improvement, and the Development Board's encouragement and assistance in this direction would make an important long-range contribution to Iraq's industrial future.

3. Ready-Made Clothing

A ready-made clothing industry making various types of garments from cotton, woolen cloth, and rayon has grown up in Iraq. It consists of a large number of small handicraft establishments and a small number of medium-sized plants equipped with automatic machinery. Competition, particularly in the shirt and underwear sectors of the industry, keeps prices at a very low level,

but the preference for foreign-made clothing has not been substantially reduced. A further difficulty is that a substantial part of the market for low-priced suits is supplied by the import of second-hand suits. It is estimated that no more than one third of the total market for ready-made clothing is supplied by local manufacturers.

Government-sponsored factories that have been established to make military and police uniforms have aggravated the industry's difficulties; excess capacity now exists. Some of the large establishments are nevertheless expanding their output, and plans for the construction of future factories have been made. As income levels rise, further expansion can be expected to take place. Development Board action should be confined to encouragement and assistance. The following measures are recommended:

1. Legislative or administrative action to limit the purchase of imported clothes by Government departments to items that cannot be made in Iraq.
2. Promotional and advertising campaigns should be initiated. There may be an opportunity to establish outlets for domestic products in the country areas, where preferences for imported brands have not yet become firmly established
3. The reduction or abolishment of import duties on fabrics and cloth that cannot be manufactured in Iraq. Where materials can be made in Iraq, their use should, of course, be encouraged.

F. MISCELLANEOUS INDUSTRIES

1. Fruit and Vegetable Production

Iraq's production of vegetables and fruits other than dates in a recent year is summarized in the following table; the figures shown are believed to be typical of the present cultivation pattern:

CROP	AREA CULTIVATED	PERCENT OF TOTAL ANNUAL CULTIVATION	PRODUCTION
Fruit	148,640 (donums)	1.5%	232,880 (est) (tons)
Vegetables	169,850	1.7%	754,571 (est)

Iraq also imports an estimated 6000 tons of fruit and 300 tons of vegetables annually, at a total value of approximately ID 200,000.

Combined import and production figures do not, however, give a true picture of market demands. Wholesale merchants are unamimous in their opinion that present demand is far greater than they can supply and that the limiting factor is the lack of adequate supplies. The development of broader markets awaits an increase in yields and the areas under cultivation and, of great importance, the improvement of facilities for bringing the crops to the market. The Ministry of Agriculture has recently organized a special branch to raise vegetable production; increased citrus fruit plant uses are also being promoted by the Government. Government activity in providing pest control and improved farming practices and in introducing fertilizers will also serve to increase production.

In addition to the obvious benefits of making available greater amounts

of fruits and vegetables, such crops can serve as a basis for new industry. Of the several possibilities, the most practical immediate one is further establishment of more extensive cold-storage facilities. Present Baghdad storage facilities contain space for 1500 tons of food products of which 500 tons is used exclusively by one food-marketing organization. An additional capacity of 400 tons in Basra will be made available shortly. However, local food distributors estimate that total available capacity is less than one third of actual requirements. At the present time, limited quantities of produce are further reduced by a high rate of spoilage. This problem is aggravated by two other factors, which also require urgent attention. Since crops are frequently not picked until they are fully ripe, they quickly deteriorate. In other countries, picking usually takes place before the state of full ripeness, so that ripening can take place in transit. Transport facilities are completely inadequate in most areas and add further to the rate of spoilage. These two problems are receiving attention, but their solution will not materially improve the position unless cold-storage facilities are improved and expanded.

Construction of cold-storage warehouses, first in the Baghdad area and eventually in other major centers, is recommended, for the following reasons:

1. To reduce the present high rate of spoilage.
2. To make available storage space for crops temporarily in excess of supply. Thus fruit and vegetables will be available for a longer period of the year.
3. To permit storage of eggs, which also lack preservation facilities and are always in short supply during the winter.
4. To lay the foundation for the ultimate establishment of a canning and preserving industry.

The major distributors of fruits and vegetables have considered the construction of a cold-storage warehouse in Baghdad to furnish space to various interested parties, but no firm plan has yet been put forward. Immediate steps should be taken by either the Industrial Bank or the Agricultural Bank to encourage the formulation of such plans and to provide the necessary financial assistance for their implementation.

Food canning does not present an immediate industrial opportunity at the moment, for the following reasons:

1. Canned foods would be a luxury to the majority of the people. Only a very limited market would await them and the development of larger markets will require substantial increases in income.
2. Supplies of fresh fruits and vegetables are inadequate to meet demand at present; production and storage facilities should be developed first.
3. There is a serious lack of containers. Imports of tin plate or cans and bottles would be expensive. Domestic manufacture of these items may be possible in a few years.
4. Public taste is geared to the consumption of fresh and dried fruits and vegetables. Preferences, together with low income levels, again preclude any immediate prospects of large-scale market development.

A food-canning industry may eventually be established if the shortage

of containers and cold-storage capacity can be overcome. Market limitations will probably remain for many years and only small-scale industrial opportunities seem likely to arise. Small, special-purpose canning facilities can be obtained for ID 3000 to ID 5000, while minimum-sized, general-purpose canneries can be installed for ID 30,000 to ID 40,000.

Meanwhile, it would be in order to consider alternate methods of supplying preserved produce to the Iraqi market. Dried fruit currently finds ready acceptance and is imported in considerable quantities from nearby countries. Local market sources again indicate that demand far exceeds supply. Further, drying techniques are simpler and investment is lower than for equivalent canning capacity, and the container problem does not exist. It is believed that fruit-drying facilities could be established immediately, in crop-growing areas. Production could utilize existing local surpluses, which at the moment never reach the market but would find ready acceptance in Iraq. Such a project could either be undertaken directly by the Date Association or by private enterprise provided with financial and other assistance.

2. Alcohol and Beverage Production

a. Alcohol and Beer

Both industries have greater productive capacity than the market conditions justify. Alcohol is produced from dates in three large distilleries in Baghdad and one small one in Mosul, principally for conversion into Arak. Present annual production is in the range of 1000 to 1200 tons of 95%-proof spirit alcohol. As output is at a rate that does not exceed one third of the productive capacity, further industry expansion would be wasteful. If industrial uses of alcohol are developed, considerable quantities can be produced from the existing plants; if very large quantities are needed, it will probably be more economical to obtain them from petrochemical sources.

Demand for beer has been increasing at a rate of 10% per year since 1948, and current annual production is an estimated 2 million liters. In the absence of greatly improved transport facilities, promising export markets, and rapid changes in social habits, it is unlikely to rise at a significantly faster rate in the future. It is, therefore, difficult to understand why, when the present brewery is producing at only 50% of capacity, private interests have decided to build two further breweries. If they are, in fact, constructed and brought into operation, it seems unlikely that the industry will remain a profitable one.

In neither field are further realistic industrial opportunities discernible. The Development Board should indicate to the Industrial Bank that Development Funds should not be made available to these industries.

b. Wine Production

A rudimentary wine industry exists in the north of Iraq. Although the wine is not of high quality, it commands a ready market and production has increased 10% to 20% each year. Current demand is stated to be three to four

times the amount available from present production. A major industrial opportunity does not appear to be present, but financial and technical assistance to improve and expand production is recommended. This would increase the demand for grapes and encourage the development of the industry. Direct Development Board interest is not recommended at this stage.

3. Fish Resources

Annual fresh fish production in Iraq is an estimated 8000 to 10,000 metric tons, which when prorated over the area covered by Iraq's permanent inland waters, compares unfavorably with fish production from waters of similar nature in other parts of the world. Domestic demand for fresh fish is high and in many cases is in excess of supply. There is evidence to suggest that increased demand for fresh fish has resulted in a serious overfishing, but that the waters of Iraq have a high potential for increased fish production, provided that proper conservation measures are applied.

There is an opportunity for increasing both the amount and variety of food supplies available in Iraq through improving conditions in the inland waterways. At least one expert has suggested that the situation will be beyond repair by 1957 unless immediate steps are taken. These matters are thoroughly covered and specific recommendations made in the excellent FAO report to the Government of Iraq entitled, The Development of Inland Fisheries, submitted in April, 1954.

Improving the fresh-fish supply will initially promote commercial rather than industrial activity. Nevertheless, it may well be that small industries concerned with the filleting, preserving, and selling of fresh fish can eventually evolve as the growth of fish supplies and domestic refrigeration creates favorable conditions. For this reason and because of the potential contribution to the nation's food supply, immediate steps should be taken by the Government to implement the FAO recommendations.

Industrial opportunities based on sea fish may be greater. Commercial fishing in the Persian Gulf is very limited at present, providing an estimated 270 tons annually to Iraqi markets. In contrast to Iraqi efforts in this field, commercial fishermen in the Kuwait and Bahrein areas produce 2500 to 3000 tons annually. In addition, a company has recently been sponsored by Iranian and Japanese interests that will undertake large-scale fishing operations in Persian Gulf waters. This company will have an initial capital of ID 350,000, 20% of which will be provided by the Iranian Government and the remainder by two Japanese companies. Two 350-ton ships and a harbor refrigeration plant are planned.

Extensive sea fishing could provide the basis for three possible industries: fish filleting and packing; fish drying; and fish-meal production. Fish meal, a substance rich in protein and vitamins, is a valuable additive to animal and poultry feeds and also has possibilities as an export commodity. (See Appendix, Chapter III-F-7.) Normally, fish-meal plants are established to utilize residues from fish filleting and packing plants; this possibility must be deferred until markets for prepared fish products are found, transportation

is better developed, and refrigeration facilities are more widespread.

If it is found that fish meal is a desirable additive for Iraq's proposed animal-feed industry, it is probable that a fish-drying plant together with a fish-meal plant could be successfully established. Fish could be dried easily in the Basra area and sold for human consumption, with the residue used for fish meal. In addition, the plant could process rough fish, such as sharks, for fish-meal purposes only.

This possibility is quite speculative at the moment and will primarily depend upon:

1. The need for fish meal as an animal-feed ingredient.
2. The development of markets for dried fish (in view of demand for fresh fish, this may not be overly difficult to cultivate).
3. The availability of fish resources in sufficient quantity to make the operation economically feasible. However, it is considered of sufficient importance to be recommended for future investigation.

Direct Government participation is not recommended, although further investigation by the Industrial Bank may be appropriate. If economically feasible opportunities are revealed, they should be given financial and technical assistance.

Investigation into the possibility of producing fish oil should also take place. This commodity is far more valuable than fish meal and could be processed in Iraq's existing vegetable-oil hydrogenation plants.

4. Wood and Wood Products

Iraq's timber resources are very limited; new industrial opportunities based on the use of wood are not at present desirable. Considerable imports of wood, rising from 9850 cubic meters in 1950 to more than 40,000 cubic meters valued at slightly more than ID 1 million in both 1953 and 1954, are necessary to sustain the present wood-using industries. There are already more than 150 small furniture factories and 352 carpenter shops in Baghdad, and more are likely to come into existence as house construction increases and income levels rise. It will probably not be difficult to obtain adequate supplies of imported wood, but it is likely to continue to be very expensive. Development Board action in this field should, therefore, be designed to encourage the production of substitutes made from local materials, and to render all possible help and assistance to the Forestry Department in its plans to increase domestic timber supplies.

In other sections of this report the possibility of producing steel, plastic material, or a hardboard in Iraq is considered and certain recommendations are offered. The need to replace expensive imported wood produces a further justification for their careful study. Development Board assistance is already being given to the Forestry Department to further its excellent work in afforestation and other spheres. This assistance should be continued and, if necessary, increased. In this way a resource upon which future industrial development may be based will be developed.

5. Tobacco

The tobacco industry faces certain problems, but they appear to be fully appreciated by the Tobacco Administration and the Ministry of Agriculture. Present plans to improve the quality of the crop, its grading, and its handling are appropriate and will undoubtedly lead to great improvements. The industry is likely to grow in importance as the improvements come into effect; later it may be possible to consider entry into export markets. Direct Development Board interest is not recommended.

6. Miscellaneous Food Manufacture

Factories producing sweets, grain products, fruit-juice preparations, tomato paste, and sesame food preparations have been established and are growing satisfactorily. Sweet making, for example, is carried out in more than 60 establishments. Annual output is estimated to be between ID 1 million and ID 1.5 million. Development Board action is not necessary, but the Board should note that the consumption of sugar and starch is rising rapidly. Sugar production has been examined elsewhere in this report, where increasing markets, including the confectionery-trade market, have been indicated. A substantial quantity of imported starch, approximately 1000 tons per year, is now being used; this is below the quantity necessary to ensure the economic operation of a plant to produce starch from maize, but an industrial opportunity may arise in the future. Investigation of the possibility of producing starch from dates has been recommended elsewhere; the domestic demand and the fact that it might be possible to convert starch into sugar in the beet-sugar plants might eventually justify development.

7. Appendix

a. Animal Feed Substances that are or will be available in Iraq

The report suggests that various substances should be used for animal-feeding stuffs, and this appendix provides information on the nutritive and other aspects of the materials available in Iraq.

Industrial development in Iraq will, during the next few years, make available a large number of substances that are suitable for feeding to animals either alone or in the form of mixed feeds. An investigation carried out by Arthur D. Little, Inc., in Egypt revealed that the development of an animal-feed industry could play a major role in raising the living standards of the people, by increasing egg production by 80% and milk production by 75%, so raising the protein derived from animal sources by 19%. On the basis of the data collected in this investigation and information[1] available in Iraq it seems likely that the market for balanced ration feeds in Iraq would exceed 500,000

1. Chicken Industry of Iraq, Anis J. El Sosi and George B. McLeroy, Abu Ghraib Agricultural College, 1955.
   Agricultural and Livestock Census 1952-1953.

tons annually. The desirable composition cannot be determined without substantial further research, as the composition of animal-feeding stuffs throughout the world depends on local conditions of raw material supply. The following notes on the nutritive and other aspects of the substances that will be available in Iraq are, however, offered for the Board's guidance. (See also Table 78).

(1) Macerated Dates and Date Pits. Macerated dates appear to be a good source of carbohydrates, but are low in protein and fat content. Little information is yet available on the use of macerated dates, but initial experimental work in Iraq indicates that the dates can form an excellent and inexpensive source of carbohydrates for fattening sheep, fattening calves, and lactating dairy cows, when used to make up one third of the concentrate mixture and when properly supplemented with protein. There are indications that higher proportions may be possible for feeding sheep and dairy cattle. Experiments indicate that macerated dates can be readily mixed with good barley and other concentrates to form an easily handled mixture, although special mixing equipment may be required. Feeds containing macerated dates are palatable to the stock and appear to cause no digestive difficulties.

Date pits are higher in protein and fat than macerated dates, but they are also low in protein content. Experiments in Iraq indicate that date pits may be used in about the same way as macerated dates, but evidence on the relative value of dates and of pits is not yet available.

(2) Dried Beet Pulp and Dried Molasses-beet Pulp. These substances are palatable, slightly laxative, bulky, and storable. They are rich in carbohydrates, relatively low in protein content, and poor in fat content. Dried beet pulp averages 9.2% protein, 0.5% fat, 19.8% fiber, and 57.2% nitrogen-free extract. The fiber content is well digested. The total digestible nutrients of dried beet pulp–67.8%–are almost equal to those of oats. The feeding value of the dried molasses-beet pulp is about the same as that of the pulp alone, but it is slightly higher in protein and nitrogen-free extract. Both have a fair amount of calcium but are low in phosphorus content, with the result that a phosphorus supplement is required when these feeds make up a considerable portion of the ration. The pulp has a fair niacin content, but is low in other B-complex vitamins and has no carotene or Vitamin D.

Because both types of feeds are of a bulky nature and have a high palatability, they are popular for dairy cattle and are used mostly for this purpose. They have a relatively high value when mixed with more concentrated feeds, but if used alone are worth no more than corn or oats, as they are too bulky and too low in digestible nutrients to be very efficient if used as the only concentrate.

In sugar-beet-growing districts these feeds are used as substitutes for part of the grain in fattening cattle or sheep and may replace part of the grain for horses. Dried pulp is not generally liked by horses, but if it is mixed with other feeds to a maximum of one third of the content, it can be used. Both feeds are used for fattening lambs, and when used to not more than one half of the concentrate mixture, are worth as much per ton as barley or grain sorghum and about 95% of corn. Both are too bulky to be used as a

poultry feed.

(3) Wet Beet Pulp. The sugar-beet pulp that is not dried is often stored at the factories as wet pulp in large open silos, where it undergoes acid fermentation similar to that occurring in corn silage. It is then transported to farms and fed at intervals frequent enough to prevent spoilage. The drainage of the water from the wet pulp and the loss of nutrients in fermentation cause a shrinkage of about 30% when the pulp is ensiled in trench silos. The wet pulp is very watery, containing only about 11.5% dry matter. Its chief value lies in its carbohydrate content and the fact that its fiber and nitrogen-free extract are well digested by cattle and sheep. The dry matter in the wet beet pulp is about equal in feeding value to that in roots. The wet beet pulp is low in protein and especially low in phosphorus. It is usually fed with alfalfa but should have a phosphorus additive such as steamed bone meal, although if cottonseed meal, linseed meal, or wheat bran are also fed, they may supply sufficient phosphorus.

The wet pulp is fed chiefly to fattening cattle or lambs or to dairy cattle. It is liked by dairy cows and produces good-quality milk when fed under proper conditions. In order to avoid impairing the flavor of the milk, the pulp should be fed after milking and in a sanitary manner. Another use of the wet pulp is as part of the feed for beef cattle and sheep.

(4) Sugar-Beet Molasses. Sugar-beet molasses contains a large amount of sugar along with mineral salts and other constituents. It has as much sugar as cane molasses and is considerably higher in crude protein, but much of this consists of simpler compounds than protein. It is very low in phosphorus so that it is necessary to add this element when the molasses makes up a considerable part of the ration. When used properly, beet-sugar molasses has as high a feeding value as cane-sugar molasses but is more laxative, because of the high content of certain alkaline salts and other laxative substances. The stock must be accustomed to the molasses gradually and the amount fed must be strictly limited.

As with cane molasses, beet-sugar molasses is usually used in various mixed feeds, especially in alfalfa-molasses mixtures. Its chief value is in the improvement it can make in feed palatability. Its use can often induce stock to eat roughage of rather poor quality with less waste of the stems and coarser parts than would otherwise be the case. It is usually diluted in this case with one to two parts of water and sprinkled over the roughage. Beet molasses is popular for fattening cattle in sugar-beet-growing areas. Best results are generally secured when the molasses replaces not more than one half of the concentrates ordinarily fed. When not fed in excessive amounts, beet molasses is worth as much per ton as cane molasses for beef cattle.

Because of its laxative effect, the maximum amounts that should be fed daily, as advised by various authorities, is, per 1000 lb of live weight:

Dairy cows	2.5 to 3 lb
Fattening cattle	4 to 5 lb
Fattening sheep	3 to 5 lb
Driving horses	2.5 lb
Draft horses	Up to 4 lb
Fattening swine	5 to 10 lb

Breeding animals should be fed less than fattening animals and the amount should be reduced materially six weeks before the young are born.

(5) Cottonseed Meal. Cottonseed meal of the usual grades contains 41% or more protein, or nearly as much protein as soybean oil meal. It usually contains 6%, or slightly more, fat if it is produced by hydraulic or expeller methods, and a much smaller amount if it is produced by a solvent extraction process. Cottonseed meal of high grade supplies slightly less digestible nutrients than linseed meal. The solvent-process meal will be slightly lower in digestible nutrients than expeller-process or hydraulic-process meal because of its lower fat content.

Cottonseed meal is one of the richest feeds in phosphorus, containing 1% or more, but it is low in calcium (0.2%) and lacks vitamin D, as do other seed products. It has little or no carotene (Vitamin A value) but has a fair content of B-complex vitamins. The nutrients that are lacking in cottonseed meal can be supplied by including in the ration a sufficient amount of well-cured legume hay or a mixed hay that is high in legumes. Cottonseed meal may be slightly constipating in its effect, but not noticeably so when fed with such feeds as legume hay or silage. Its use may be advantageous when considerable amounts of laxative feeds such as beet molasses or sugar-beet tops are used.

The feeding of cattle, sheep, and horses with cottonseed meal will supply protein of satisfactory quality when it is the chief or only supplement, but for nonruminants the protein is not of high quality and it is necessary to combine the meal with meat scraps, fish meal, or milk products. Cottonseed meal is one of the best protein supplements for dairy cows, beef cattle, and sheep, but only limited amounts should be fed to poultry because of the danger of injury from the gossypol contained in the meal. This substance is poisonous to certain animals if consumed in sufficient amounts. The danger of injury from gossypol can be reduced by heating dampened meal under steam pressure or by treatment with a solution of ferrous sulfate.

In feeding calves less than three to four months old, not more than 20% cottonseed meal should be included in a concentrate mixture. Horses and mules should be fed 1 to 2 lb daily per head along with good-quality roughage. Sheep may be fed as much cottonseed meal as is needed to balance their rations but should not be fed large amounts for long periods.

Cottonseed meal is one of the most widely used protein supplements for dairy cows. If fed with roughage of first quality there are no ill effects, but it should not be fed as the sole ration if this can be avoided. Combination with grain and other feeds is better, since if cottonseed or cottonseed meal

forms too large a part of the concentrates, the butter is apt to be hard, sticky, and tallowy. Although it is not as palatable as linseed meal, it is fairly well liked by cows, particularly if it is mixed with linseed meal and wheat bran.

(6) Whole-pressed Cottonseed. This by-product, also called cold-pressed cottonseed cake, is made by pressing whole cottonseed, including hulls, in oil expellers. Because it contains all the hulls, it is much lower in protein and higher in fiber than cottonseed meal. Generally, whole-pressed cottonseed contains 25 to 28% protein, 22 to 25% fiber. It may be fed to stock in the same manner as cottonseed meal.

(7) Cottonseed. Very little cottonseed is used as feed, because of its high oil value for other purposes and because cottonseed meal usually gives better results.

(8) Cottonseed Hulls. In the southern United States, cottonseed hulls are used as a roughage, especially for cattle. They supply about 43.5% of the total digestible nutrients or about as much as late-cut grass hay or oat straw. They are low in protein, almost none of which is digestible; they are low in calcium and very low in phosphorus, and lack carotene. If properly fed, cottonseed hulls are about equivalent in feed value to fair-quality grass hay and are worth more per ton than corn or sorghum stover, straw or poor hay. They are well liked by cattle. When cottonseed hulls are used for feed, they should be fed with protein-rich feeds and only as part of the roughage, along with good-quality legume hay or other forage that will supply carotene and minerals. Unless considerable legume hay is supplied, a calcium supplement such as ground limestone or oyster shells should be added. Additional phosphorus should be supplied unless a phosphorus-rich supplement such as cottonseed meal is used.

(9) Sesame oil meal or cake. Sesame oil meal or cake is rich in protein, containing about as much protein as cottonseed meal. It averages 42-48% protein and is high in calcium and phosphorus. The protein it supplies is of good quality. This meal is well liked by stock, keeps well in storage, and is highly regarded in Europe. It is satisfactory for all classes of stock.

(10) Blood Meal. Of all packing-plant by-products, dried-blood meal has the highest protein content, averaging over 80% protein, but the protein is less digestible and of poorer quality than that in high-grade meat scraps. The calcium and phosphorus content of blood meal is quite low, on the other hand. Its chief use is in the preparation of "calf starters" or calf meals for the raising of dairy calves on a minimum of milk. Although calves generally do not like it at first, they gradually accept it. Blood meal is occasionally used in poultry feeds, but poultry generally find it unpalatable.

(11) Fish Meal. Fish meal has proven to be of high value for the feeding

of swine and poultry, because of the excellent quality of protein that it supplies. The average protein content of fish meal is about 64% and the protein is of high nutritive value. Too large a percentage of fish heads reduces its value, however, because much of the protein in the heads is less digestible and of lower nutritive value than that in the flesh. The bones that are used result in a high calcium content of about 4.1% and a high phosphorus content of about 2.7%. The total mineral matter content usually averages about 17.5%. Fish meal usually has a fair amount of riboflavin and a considerable amount of niacin. There is also usually an appreciable iodine content. Fish meal that is processed under partial vacuum may have considerable amounts of vitamin A and D, while that processed in other ways may have none.

Several types of fish meal differ both on account of the raw materials used and the methods of processing employed. The most common kind in the eastern United States, for example, is menhaden fish meal, which is made from menhaden herring, a very fat fish not suitable for human consumption. White fish meal is made chiefly from the waste of the cod and haddock industry, not including the entrails, which except for the livers are dumped at sea. Other fish meals are made from sardines, herring, tuna, salmon, etc. Fish meal made by a vacuum drying process is superior to that made by a flame drying process in that it has a higher vitamin content and its protein is more digestible.

In addition to its use in feeding swine and poultry, fish meal has been used as a good practical substitute for milk in raising dairy calves and as a protein supplement for dairy cows, beef cattle, and sheep. Its use does not impart a fishy taste to the eggs, milk, or meat, provided that the fat content is not too high. Fish meal can affect the flavor of turkeys, however, during the fattening period, and it should not be fed to them for at least eight weeks before marketing. Most fish meals are not palatable to poultry and therefore not more than 5 to 10% should be included in the ration.

Fish meal is not generally fed to cattle (except calves), sheep, or horses where protein supplements of plant origin, linseed meal, soybean-oil meal, or cottonseed meal are available at economical prices. It is not often palatable to cattle or sheep, although sometimes they can be made to eat a concentrate mixture containing 10-15%.

b. Fruit and Vegetable Canning in Iraq

At the present time Iraq does not seem to have a sufficiently large supply of fruit and vegetables to justify the installation of a canning plant. Even a small modern cannery must produce very large numbers of cans to ensure economical operation. Further, it is necessary that fruits and vegetables be available near a major market area on a nonseasonal basis. Overhead costs are very high unless more or less continuous operation can be achieved with a constant supply of products for canning. It seems unlikely that this condition could be satisfied in Iraq for some years and the report proposes that seasonal surpluses should, for the time being, be dried and not canned. The following information on the economics of can-making is, however, offered for the Board's future guidance.

TABLE 78. AVERAGE COMPOSITION AND DIGESTIBLE NUTRIENTS

	Total Dry Matter	Dig. Protein	Tot. Dig. Nutrients	Nut. Ratio	Average Total Composition (%)				
					Protein	Fat	Fiber	N-Free Extract	Mineral Matter
	%	%	%	1:					
Green roughages, roots etc.									
Beet tops, sugar	17.8	1.7	10.4	5.1	2.7	0.2	2.0	9.0	3.9
Beet (roots) sugar	16.4	1.2	13.7	10.4	1.6	0.1	1.0	12.6	1.1
Concentrates									
Beet pulp, dried	90.1	4.3	67.8	14.8	9.2	0.5	19.8	57.2	3.4
Beet pulp, molasses, dried	91.9	7.1	72.1	9.2	10.7	0.7	16.0	59.4	5.1
Beet pulp, wet	11.6	0.8	8.8	10.0	1.5	0.3	4.0	5.3	0.5
Cottonseed, whole	92.7	17.1	90.8	4.3	23.1	22.9	16.9	26.3	3.5
Cottonseed, whole, pressed, 25% protein guarantee	93.5	20.3	59.8	1.9	28.2	5.8	22.6	32.2	4.7
Fish meal, all analyses	92.8	56.2	72.8	0.3	63.9	6.8	0.6	4.0	17.6
Sesame-oil meal	93.7	38.9	70.9	0.8	42.8	9.4	6.2	22.8	12.5
Blood meal (dried blood)	91.8	60.0	61.3	0.02	84.5	1.1	1.0	0.7	4.5
Macerated dates (pits removed)[1]	73.9	-	-	-	3.0	0.2	2.1	67.3	1.3
Ground date pits[2]	92.7	-	-	-	6.7	7.4	15.5	59.4	3.7

1. From Iraqi Dates - Culture, Industry, Trade and Delicious Recipes, 1953.
2. Analysis by Soil and Chemical Laboratory, Abu Ghraib Agricultural Experiment Station, Iraq. All other analyses compiled by Feeds and Feeding, F.B. Morrison.

AVERAGE COMPOSITION AND DIGESTIBLE NUTRIENTS (Cont.)

	Mineral and Fertilizing Constituents (%)				Digestion Coefficients (%)			
	Calcium	Phosphorus	Nitrogen	Potassium	Protein	Fat	Fiber	N-Free Extract
Green roughages, roots etc.								
Beet tops, sugar	0.18	.04	.43	1.03	64	35	67	80
Beets (roots) sugar	0.04	0.04	0.26	0.25	72	0	34	97
Concentrates								
Beet pulp, dried	.67	.08	1.47	0.18	47	0	75	85
Beet pulp, molasses, dried	0.62	0.09	1.71	1.63	66	0	80	88
Beet pulp, wet	0.09	0.01	0.24	0.02	55	0	82	88
Cottonseed, whole	0.14	0.70	3.70	1.11	74	92	64	59
Cottonseed, whole, pressed, 25% protein guarantee	-	-	4.51	-	72	97	32	61
Fish meal, all analyses	4.14	2.67	10.22	0.40	88	95	-	-
Sesame-oil meal	2.02	1.61	6.84	1.35	91	65	55	65
Blood meal (dried blood)	0.33	0.25	13.52	0.09	71	38	18	25
Macerated dates (pits removed)	-	-	-	-	-	-	-	-
Ground date pits	-	-	-	-	-	-	-	-

Automatic canning lines, such as are normally established in the United States, require an investment of about ID 130,000 to 170,000 for each line. This equipment requires a nonseasonal market of about 16 million cans for economical operation, and should not be considered for installation in Iraq. It might be possible, however, to manufacture cans on a hand-operated line, or on a semiautomatic line. Equipment for a hand-operated line, would cost in the order of ID 30,000 as new equipment, and ID 10,000 as used equipment; a semiautomatic line would cost about ID 100,000 to ID 130,000 as new

equipment, and ID 70,000 to ID 100,000 as used equipment. Because of Iraq's low wage rates, it appears that with a market of about 800,000 cans per year on a nonseasonal basis, labor costs of can manufacture would be about the same as those in an automatic line with a nonseasonal market of 16 million cans annually: about 1.1 to 1.4 fils per can.

Although there is a great difference in the output of an automatic line and a manual line, the operations are essentially similar. These include:

1. stamping tops and bottoms
2. slitting body stock
3. forming body hooks (side-seam flanges)
4. forming body stock into cylinder
5. locking the side seam
6. soldering side seam
7. flanging top and bottom
8. crimping bottom to can body
9. testing for leaks

In an automatic line, all of these operations are peformed mechanically with elaborate conveyor systems between the various operating stations. In a manual line, however, each operation is performed by individual workers who present the material to various stamping and bending machines. Soldering on a manual line is done by hand with gas-heated soldering irons. Between the extremes of the automatic line and the manual line are varying degrees of mechanization. For instance, a semiautomatic plant might stamp the tops and bottoms by hand while forming and soldering the bodies on an automatic machine. It would be possible to design a line uniquely suited to any particular situation.

Raw materials represent one of the largest cost factors in can manufacture. In the United States, about 50% of the cost of a completed can is attributable to them. The necessary materials are tin plate (both plain and lacquered), solder, and flux. The usual tin plate is 1/4 lb electrolytic with a lacquer applied to one side. There are different tempers and thicknesses of plate required for different types of cans and for the different parts of an individual can. Iraq would have to import the necessary raw materials and the price at which they would be available on a long-term basis would have an important influence on the economic feasibility of can making in Iraq.

Can manufacturing is a regional industry because of the high cost of transporting completed units. Tin plate, on the other hand, is relatively inexpensive to transport and there is no comparison between the storage space required for a ton of cans and a ton of tin plate. In some parts of North America, transport costs of cans amount to about 20% of their total value.

Although costs of European can manufacturers are not known, an indication of approximate costs can be obtained from the fact that in the United States, a can 3 inches in diameter and 4-7/16 inches in height sells for about 8.5 fils at the factory.

c. Manufacture of Margarine

At the present time margarine as it is known in the West is not manufactured in Iraq. A product called margarine is made, but it is not of the same texture and appearance as butter. The use of butter and margarine is relatively small in Iraq and seems to be limited to the wealthier section of the indigenous population and to the foreign groups. These consumers would not be likely to purchase domestically made margarine even if it became available at substantially lower prices than imports. Discussions with the vegetable-oil industry revealed that this market limitation had prevented the industry from taking up this opportunity, as margarine production would be a relatively simple operation to carry out. The necessary equipment is already available and shortage of capital does not seem to be a limitation.

Import statistics for 1952, 1953, and 1954 give an indication of the present market. Imports of "Crude tallows, melted tallows; premier jus fat from bones, offal and the like; oleomargarine and oleostearine" totaled 400 tons in 1952, 2177 tons in 1953, and 3936 tons in 1954. Another import category lists "Margarine, artificial lard and other alimentary fats obtained by similar treatment" as 2 tons in 1952, 17 tons in 1953, and 16 tons in 1954.

It appears that if the demand for domestically manufactured margarine arises, the existing vegetable-oil companies will be prepared to meet it and that its manufacture will require no direct interest on the part of the Development Board.

CHAPTER IV

INDUSTRIES BASED PRIMARILY ON IMPORTED MATERIALS

CHAPTER IV TABLE OF CONTENTS

INDUSTRIES BASED PRIMARILY ON IMPORTED MATERIALS

	Page
I. IRON AND STEEL	291
A. The Production of Pig Iron	292
B. The Rolling of Steel	293
1. Market for Rolled-Steel Products	293
2. Resources	295
3. Costs and Investment	296
4. Conclusion	297
C. Steel Production	297
1. Methods of Steel Production	299
2. Costs and Investment	300
3. Conclusion	301
4. Special Problems	301
5. Means of Implementation	302
D. Steel Founding	303
E. Recommendations	303
II. METAL PRODUCTS	304
A. Introduction	304
B. Recommendations	305
C. Products used in Buildings and Construction	306
1. Metal Windows and Doors	306
2. Pipe Fittings	307
D. Household-Products Market	307
1. Air Coolers	308
2. Kerosene Water Heaters and Stoves	308
3. Furniture	309
4. Refrigerators	309
5. Aluminum Kitchen Utensils	310
6. Solar Stoves	311
E. Products for Agriculture	311
F. Service Industries	312
1. Central Machine Shops and Foundries	312
2. Mobile Repair Units	313
3. Central Garage	313
G. Department of Standards	314
1. Functions of the Department of Standards	314
2. Personnel and Facilities	315
3. The Establishment and Operation of a Department of Standards	315

I. IRON AND STEEL

An examination of Iraq's mineral resources and the present and potential needs of her economy indicates that a steel industry should be established in Iraq based on domestic scrap supplies and imported semirolled products, but that raw iron production does not offer chances of economic success. In the steel industry very large investments are necessary; for this and several other reasons a cautious approach is strongly recommended. Establishment of a medium-size integrated plant offers little possibility of economic operation, but there are good chances of success for a series of carefully considered separate projects.

Before a detailed analysis is offered, it is necessary to point out that an iron and steel industry is made up of four distinct stages of production. Sometimes, where local circumstances are appropriate, all four stages are carried out in a single plant, but in many cases each productive process is carried out in a different place. The feasibility of establishing each of the following stages of iron and steel production in Iraq is examined in this section of the report:

1. The smelting of iron ore to produce pig iron. This is usually carried out in a blast furnace where supplies of metallurgical coke, limestone and certain other chemicals are needed in addition to iron ore. Other ore reduction methods are possible where quantities of less than about 150,000 tons of iron are required each year, or where unusual local conditions prevail.
2. The conversion of pig iron into steel. A mixture of pig iron, either molten or cold and steel scrap is refined in a furnace to produce steel. It is possible to manufacture steel entirely from scrap, although the addition of small amounts of pig iron is desirable. This conversion step can be integrated with the production of pig iron and a considerable fuel economy be realized. The molten steel produced is cast into blocks known as ingots.
3. The rolling of steel ingots, first into blooms or billets and then into bars, rails, angles, strips and many other products. This operation can be integrated with stage 2 or with stages 1 and 2 together.
4. The fabrication of rolled products into a wide variety of other products. This stage is discussed in detail in a separate section of the report devoted to metal products.

An iron and steel industry often contains two other additional operations:

5. The casting (or founding) of iron. This operation is already carried out in Iraq, based on cast iron scrap melted in small furnaces.
6. The casting (or founding) of steel. This is a more difficult operation which has not yet been attempted in Iraq. Further discussion of this possibility will be found at the end of this section.

There have been many proposals to establish a steel industry in Iraq, ranging from a fully integrated iron and steel plant to a small rolling mill. A middle course is most appropriate. Examination of raw material requirements and sources indicates that pig iron cannot be produced economically in Iraq, and for the present precludes the possibility of an integrated steel plant or a large tonnage iron foundry. A brief statement of the reasons for this view is presented below and is followed by a detailed analysis of the more attractive opportunities.

A. THE PRODUCTION OF PIG IRON

There is a small market for pig iron in Iraq provided by numerous small iron foundries. At the moment, these foundries obtain supplies of domestic iron scrap at ID 18 per ton, and import small quantities of pig iron at prices ranging from ID 25 - ID 40 per ton. This foundry demand will grow in the future, but is not likely to be a significant market for many years; in any case, this market alone would by no means justify establishment of pig iron producing facilities. The important demand for pig iron would come from a steel-making furnace or a large-scale iron or steel foundry.

The most serious objection to making pig iron in Iraq is the absence of proven iron ore and coal deposits of suitable extent and quality. Evidence presented by the Ministry of Economics indicates that iron ore deposits are inadequate. A letter from the Third Technical Section of the Development Board and Ministry of Development states that, ''So far, investigations of the availability of local iron ore have shown that there are not enough resources in the country to support an iron and steel industry, and it is said to be unlikely that new ore bodies may be found in sufficient quantities to contradict the above statement.''

Several schemes for the production of iron from imported ores have been proposed, but it is believed that they do not offer much possibility of economic success, because of very high transport costs. Even when rich ore bodies are used, it is necessary to assemble at the smelter at least three tons of raw materials for each ton of iron produced. Further, it is not clear where imported iron ore would be obtained or exactly how much it would cost: inquiries have revealed that supplies from Turkey, India, or Pakistan may not be available; those countries have definite plans to increase their domestic consumption substantially. North Africa seems to be the most likely source of supply, but freight costs and the Suez Canal charges would be high. The British steel industry, which uses large quantities of imported ores to supplement inadequate, low-grade, domestic ores has had to develop oversea sources of supply and transport facilities itself. It is also important to note that the cost of pig iron is so high in England that users have to be paid a subsidy, a subsidy obtained by a levy on steel producers who use cheaper domestic scrap.

The location of a plant in Iraq would have to be near tide water at Basra to avoid further freight costs and transport extensions, but this would be unsatisfactory from the point of view of the necessary domestic materials. Limestone production could probably be expanded to meet the need (somewhat less

than 50% in weight of the iron produced), but the nearest source of supply is at Najaf, and the present industry is in the North. Petroleum coke could be made in Iraq, but a certain amount of metallurgical coke would also have to be imported from Europe.

Iron production from imported ores is not recommended, and it is unlikely that adequate domestic ore reserves will be discovered in the future; nevertheless, the following brief comments on the methods of ore production are offered to assist the Board.

The traditional method of ore reduction is to smelt iron ore in a blast furnace with coke and limestone, but for a country such as Iraq, with its limited market for pig iron and steel, its remoteness from sources of coke and coal, and its resources for power generation, the best proven method of producing pig iron would be electric smelting. Electric furnaces of the Tysland Hole type have proven to be most satisfactory. These require only about 50% of the coke used by a blast furnace, 0.45 lb of coke per pound of iron produced, and are available in much smaller capacities than conventional blast furnaces. In addition, the coke required does not have to be of as high a quality as is required by the conventional blast furnace. Petroleum coke could be used to meet a large portion of the electric furnace's requirements. A furnace of about 20,000 tons annual capacity can be obtained, but power requirements are too high (they exceed 2500 KWH per ton of pig iron) to permit serious consideration of installation until Iraq's power resources have been further developed.

A number of other reduction processes are possible, but very few of them have been economically successful, largely because of excessive labor requirements. Nevertheless, Iraq's low wage rates and her supplies of low-cost natural gas might make a fluidized-bed technique or some other gaseous reduction process economically more attractive than electric smelting. Should future investigation indicate that iron-producing facilities in Iraq appear feasible, it is urged that these latter techniques be evaluated before electric smelting is adopted.

B. THE ROLLING OF STEEL

Iron making does not appear to offer reasonable chances of economic success in Iraq, but steel making and steel rolling remain for consideration. Steel can be made from imported pig iron and domestic and foreign scrap, but before this possibility is examined, it is necessary to consider the advisability of a rolling mill. Without a rolling mill there would be no demand for the steel ingots produced. However, a rolling mill can and frequently does re-roll steel that has been made elsewhere.

1. Market for Rolled-Steel Products

The importation of rolled-steel products has been increasing steadily since the war and by 1954 had reached 41,350 tons. Table 79 indicates the extent to which demand may grow if current trends continue.

TABLE 79

ACTUAL AND ESTIMATED FUTURE IMPORTS OF ROLLED PRODUCTS

Year	Bars	Aver. Price, C.I.F. Basra	Beams, Joists, & Pillars	Aver. Price, C.I.F. Basra	Totals
1949	7,626	-	7,135	-	14,761
1950	2,802	-	4,243	-	7,045
1951	4,936	ID 53	6,538	ID 51	11,474
1952	12,145	ID 62	10,582	ID 60	22,727
1953	16,777	ID 43	22,013	ID 45	38,790
1954	20,771	ID 47	20,579	ID 40	41,350
1955[x]	21,900	-	24,300	-	46,200
1956[x]	24,500	-	27,900	-	52,400
1957[x]	27,200	-	31,500	-	58,700
1958[x]	29,800	-	35,000	-	64,800
1959[x]	32,400	-	38,600	-	71,000
1960[x]	35,000	-	42,800	-	77,800

[x] Estimated.

There has been a very clear upward trend in the demand for rolled steel since 1950, and indications are that the demand will increase at a faster rate in the future.

1. Building and construction is increasing rapidly and the demand for rolled steel - particularly concrete reinforcing rods - is likely to increase. Government and private house construction may amount to 22,000 dwellings by 1960, a total that could raise the demand for steel roof construction joists from 20,000 to 50,000 tons a year. On the other hand, the full force of this increase may be to some extent reduced as a result of the replacement of steel joists by reinforced concrete beams (which use only about one fifth as much steel) in house construction. This possibility is discussed elsewhere in the report.
2. If low-cost domestic steel products become available, additional domestic uses will develop. For example, low-cost, readily available bars would almost certainly stimulate the development of industrial machine shops that base their operations essentially on a supply of bars. Wire rod could also be produced to provide a raw material for wire- and nail-making plants. The extent to which new uses for rolled products will grow cannot be accurately estimated; but if industrial expansion is successfully promoted by the Development Board, substantial new markets will appear during the next five to ten years.
3. It might be possible to develop export markets in nearby countries. The full effect of those factors on the rate of growth in the demand for steel cannot be estimated, but it seems probable that by the early 1960's the

total annual domestic demand, together with a small export market, may amount to 100,000 tons.

This total is sufficient to justify a small rolling mill in Iraq, but two additional considerations remain:

1. Discussions with steel importers indicate that approximately 40% of the present demand for steel-rolled products in Iraq is for sizes and shapes larger than those which can be made on a small rolling mill. Although the pattern of future demand will depend to a large extent upon local conditions, the immediate availability of certain smaller sizes would stimulate their use in place of the larger sizes now employed, and should reduce import requirements to something less than the 40% mentioned above. For example, the building construction industry employs 4-inch, 5-inch, and 6-inch ''I'' beams in house roof construction, the size depending largely upon importer's stocks. Should 4-inch beams, but not 5-inch or 6-inch, be produced in Iraq, there is little doubt that, despite lower load-bearing characteristics, they would be used to a greater extent in house construction than at present. This is particularly true in view of government plans for increased construction of small low-cost houses. There is no technical reason why house designs cannot allow for such substitution, although 5-inch and 6-inch beams would still be required for office buildings and other large structures. Further, the knowledge that a dependable source of beams is available would encourage architects and contractors to include such beams in their specification. It seems likely, then, that total demand for products that could be produced on a small merchant rolling mill will be approximately 65,000 tons by the early 1960's.
2. Many different shapes and sizes of steel are needed. Thus short production runs are required and frequent changes of the rolls. This problem would make economical operation difficult.

2. Resources

The rolling of steel products requires three major resources: a supply of ingots or billets, substantial amounts of electric power, and a group of well trained and disciplined workers. This last requirement is particularly important because the equipment is very expensive, and difficult to repair. Comparatively few workers are required but they must be trained to work as a team.

Billets can be made in Iraq or imported. Steel is usually cast in fairly large ingots that are reduced to billets by rolling in a heavy break-down mill. It would be uneconomic to build a mill of this kind in Iraq where only a small proportion of its potential output could be absorbed. This difficulty could be overcome by casting small billet-sized ingots that could be rolled on a small merchant mill without preliminary rolling on a break-down mill, or by purchasing billets from abroad. For the first few years of operation it would be preferable to rely primarily upon imported billets. Because it is often difficult to obtain supplies, a long-term contract with a European exporter would have to be negotiated before final plans to build a steel mill

were approved. Steel producing sources indicate that a supply of billets may be available from West Germany within a year or two, and this source should be tried as final plans are formulated.

It is impossible to say at what price billets could be imported in two or three years, but the general relationship between billet- and rolled-product prices is such that there are good prospects of economical operation. For example, the current differential in the United States between re-rolling billets and semifinished products such as bars and light structural shapes is ID 9.600 per metric ton. Mill cost of re-rolling billets is ID 26.900 and mill price of bars and structural shapes is ID 36.500. Small quantities of billets (approx. 10,000 tons a year) might be made from domestic scrap. Present and projected scrap suggest that it would probably be less expensive to produce billet-sized ingots than to purchase billets. However, scrap supplies are inadequate to supply – at the most, more than one sixth of the requirements, based on present cost and availability.

Dependable electric power is needed for the motors that drive the rolls, as well as for the melting furnaces, and is essential to the success of a steel mill. Billets must be reheated before rolling, but this can be done with either oil or gas.

3. Costs and Investment

The high capital costs of rolling mills, the limited market for steel, and the wide range of products that must be produced by a rolling mill in Iraq, all impose serious limitations on the type of mill that could be operated with profit. The rolling mill that is economically feasible for Iraq is a combination rod and merchant mill. Such a mill could use either billet-size ingots or imported billets produced from larger ingots. The mill would cost about ID 2 million complete, including electrical equipment, reheating furnaces, cooling pits, cranes, and warehousing and despatch facilities. It would roll up to 4-inch ''I'' beams and channels, up to 3-inch rods and bars; up to 2½-inch wire-rod, squares, hexagons, octagons, and plate up to 5 inches. The capacity of the mill would be as high as 30 tons an hour on the larger-size sections, with capacity dropping off as section size decreased. It is estimated that average production per shift, making the necessary wide-product line and including substantial quantities of 4-inch beams and concrete reinforcing rod, could average approximately 165 tons per day or 60,000 tons per year of rolled products. This capacity is based on an 88%-90% over-all yield from ingot and billet to finished product.

Operating costs (based on a yield of about 90%) would depend on the types of products and sizes rolled, but they will be between ID 6 and ID 7 per ton. When operations begin it will probably be impractical to operate the mill for more than one shift each day, but as demand grows, two-shift operation, which would probably reduce rolling costs to less than ID 5 per ton, might become possible. Three-shift operation will never be practical, because of rolling-mill operating requirements, and the need for a large range of products in Iraq.

In order to roll beams, channels, and other structural sections larger than 4 inches in size, an entirely different rolling mill would be required. Four-inch beams are approximately the maximum size that can be rolled on a merchant-type mill. Beams as large as 6 inches must be rolled on a light structural-type rolling mill. In fact, a light structural mill might well roll sections as large as 7-8 inches, but these sizes are not considered here because of their extremely limited use in Iraq. The cost of a light structural mill that would supplement, but not replace, the merchant mill discussed above would be about ID 1,070,000 complete. A larger capital investment would increase the average cost of steel rolled, and the only economic justification for a light structural mill would be a very substantial increase in the demand for larger steel sections. The addition of the light structural mill can be made at a later date if demand for sections larger than 4 inches warrants it. Unless larger tonnages of steel are made, the addition of the light structural mill would increase the average cost per ton of steel rolled by at least ID 1.800.

The capital and operating costs quoted are based on preliminary investigations and calculations; while they are approximately correct, they should not be regarded as exact calculations. They are based on present-day U. S. costs. European costs may possibly be somewhat lower, although this is not very likely, because U. S. rolling mill manufacturers frequently build and install rolling mills in Western Europe.

A substantial proportion of the billets that would be rolled in the mill would have to be imported. Thus the relative prices of billets and re-rolled products in world markets is an important factor to be considered. The American margin of ID 9.600 is high enough to ensure very profitable operation, but the Western European price structure is, unfortunately, less satisfactory. The merchant-bar price is the same as in the United States, but the re-rolling billets are much more expensive. The official Brussels price, for example, is ID 32.850, leaving a rolling margin of only ID 3.650. The present prices of steel in Western Europe are from ID 3.500 to ID 5 above the official Brussels prices because of very heavy demand. Supplies of re-rolling billets have in fact been unavailable and their price can not be considered realistic. Nevertheless, a long-term contract to supply re-rolling billets at a price below ID 30 per ton should be assured before the steel mill is built.

If a supply of billets can be obtained, it should be possible to obtain lower freight rates than are charged for steel products. A reduction of 50% is possible and might reduce the freight charge to ID 3 per ton. Billets purchased at ID 30 could then be converted into steel products at a total cost of ID 40, which is about 10% less than the average import price. Less expensive billets and two-shift operation would, of course, improve this position and provide Iraq with steel products at considerably lower prices than present imports.

Substantial further reductions in cost could be achieved by the use of domestically produced billet-sized ingots, and a recommendation is made that the building of a rolling mill should be followed by the installation of an electric furnace to use domestic scrap. In this way, 10,000 tons of ingots could be produced at about ID 18/800 per ton.

It is impossible to estimate the return on this investment; it depends on the level of output and the prices paid for imported materials. There appears, however, to be a good chance of economic success in the early stages of operation, and considerable improvement would follow as demand and output increased.

4. Conclusion

There is a substantial and growing demand for steel-rolled products that can be met in part by the establishment of a steel rolling mill in Iraq. The recommended capacity of 60,000 tons is somewhat larger than the present demand justifies, although demand should increase to that level by the time operations begin. An examination of the factors that would influence future demand indicates that the prospects of growth - in part stimulated by the mill itself - are such that reasonably full-capacity operation could be achieved fairly soon after the mill is installed.

Steel billets, the raw material of the steel mill, can either be produced in Iraq or imported from abroad. The advisability of producing steel in Iraq is examined below, and it is recommended that this should not be attempted until the rolling mill is in operation. Imported billets can be used in the early stages. The most serious problem is likely to be the difficulty of obtaining regular sources of supply.

C. STEEL PRODUCTION

If the decision to roll steel in Iraq is made, production of steel from domestic scrap and imported pig iron becomes an immediate possibility. Steel can be produced economically in small quantities and a new mill would provide a satisfactory demand. Whether steel production is economically justified depends almost entirely upon whether adequate supplies of domestic scrap and imported pig iron can be secured at satisfactory prices.

It is very difficult to obtain reliable information about the present and future supplies of scrap in Iraq. Considerable accumulations are now available and supplies will inevitably increase each year. It is impossible to offer a reliable estimate of the annual flow of domestic scrap, but it would probably not exceed 10,000 tons for some years. This figure includes the circulating scrap that the steel mill itself would make. It is estimated that circulating scrap would amount to about 10% of the mill's output. Considerably large quantities might be available initially, but it would be unwise to make plans on the basis of a higher figure. The current price of steel scrap in Baghdad is ID 2 - 5 per ton, but this would rise if a demand appeared. Experience in other countries suggests that in the absence of a government-imposed maximum, the price would rise almost to the level of the alternative material for steel making, pig iron. Certainly, if a demand for steel arose in Iraq, the price of scrap would rise very substantially and might reach several multiples of its present price. Indications are that steel production in Iraq on this basis might require the large-scale use of imported billets. Further examination, however, is necessary. Scrap comes into existence naturally and without cost, and the costs of

assembling it amount to very much less than the price of imported pig iron. Alternatively, and more fundamentally, the value of scrap in Iraq can be considered equal to the price that could be obtained if it were exported. Scrap has a high value in Europe but transport charges to Basra and freight to Europe would reduce the ex-Basra price substantially. It is doubtful whether scrap ex-Baghdad would rise much above ID 5 or 6 even in the absence of the present export ban. This is very much less than the price that European steel makers have to pay and would give a substantial cost advantage to an Iraqi steel-making plant. In addition, recycle scrap is also obtained for the actual cost of collecting and preparing it for re-use.

By processing what is in fact a waste material that has a low export price, Iraq could produce steel at substantially lower cost than it can import it. Additional but more expensive supplies of steel could be made if scrap were supplemented with supplies of imported pig iron. Unfortunately, the world price is high and regular supplies are difficult to obtain; it might, however, be possible to make long term contract arrangements with a European exporter to provide the necessary supplies. The maximum requirements would be comparatively small in relation to the total world production.

I. Methods of Steel Production

Scrap and pig iron can be refined into steel either in open hearth or electric furnaces. The Bessemer Process can also be used, but only where large quantities of molten metal are available. It is widely used in European plants that produce iron and steel on an integrated basis. The question of which type of furnace to use in Iraq has been decided in favor of the electric furnace for a number of reasons. Most important is that an electric-furnace plant costs only about one half as much to build as an open-hearth furnace plant with a similar capacity. Also, because of the small tonnages of scrap to be refined, it seems desirable to run the furnace on an intermittent basis. This is accomplished more easily and economically with an electric furnace. Operating costs for the electric furnace would be somewhat higher per ton of steel produced; but they would be more than offset by the higher product yields and the lower capital charges. In addition, the flexibility of the electric furnace, its faster refining time, and its ability to produce any and all grades of steel, make it a much more desirable choice for a small steel plant.

It has been conservatively assumed that the total amount of scrap available in Iraq is 10,000 metric tons per year, of which about 60% is recycle scrap from the rolling mill. Based on a price of ID 5.700 per metric ton for purchased scrap and ID 1.070 per ton for home scrap (this is assumed to be the average handling and preparation charge for recycled scrap), it is considered that billet-size ingots could be produced at a rate of 31 metric tons per day (9300 tons per year) at an average cost of ID 18/800 per metric ton.

2. Costs and Investment

a. Capital Cost

ID 715,000 for the complete plant, including one 18-ton electric furnace, complete ingot pouring facilities, ingot storage space, scrap storage space, scrap preparation yard, and complete materials handling facilities.

b. Raw Material Requirements

For 31 tons of steel ingots per day:

2,370 lb of scrap per ton of ingots	=	34 tons
14 lb of electrodes per ton	=	440 lbs
55 lbs of lump ore per ton	=	.8 tons
33 lbs of limestone per ton	=	.5 tons
83 lbs of burned lime per ton	=	1.2 tons
600 KWH of electric power per ton	=	18,600 KWH
4 man-hour per ton	=	124 man-hrs

c. Raw Material Costs at Plant

Scrap, average	ID 2.930 per ton
Electrodes	ID .089 per lb
Lump Ore	ID 5.360 per ton
Limestone	ID 1.070 per ton
Burned Lime	ID 8.930 per ton
Electric Power	ID .002 per KWH
Labor, Average	ID .090 per man-hr

d. Operating Costs

For 31 tons of ingots per day

Scrap	ID 100
Electrodes	ID 39.300
Lump Ore	ID 4.280
Limestone	ID 0.715
Burned Lime	ID 10.700
Electric Power	ID 37.500
Labor	ID 11.100
Refractories, Furnace, and Ladle (at ID 0.446 per ton)	ID 13.900
Repairs and Maintenance (at ID 0.890 per ton)	ID 27.800
Furnace Additions (at ID .625 per ton)	ID 19.300
Utilities, Overhead, Slag Disposal, etc. (at ID 1.070 per ton)	ID 33.200
TOTAL	ID 297.795

e. Manufacturing Cost per Ton

Manufacturing Cost per Ton of Ingots = ID 9.610

e. Manufacturing Cost per Ton (continued)

Fixed Charges - Includes Interest, Amortization, etc. Computed on the Basis of 12% of Total Capitalization =	ID 9.180
TOTAL COST	ID 18.790

The above tables indicate that steel can be produced economically from scrap in Iraq. The low economic value of scrap gives steel production a considerable natural advantage that should not be neglected. Whether pig iron should be used to supplement scrap, and thus increase steel output, depends upon whether or not adequate supplies of pig iron can be imported at reasonable prices. A final decision should not be made to install additional steel-refining equipment until long-term supplies of pig iron have been assured. It is apparent from the above tables that the fixed charges from the steel-melting plant are extremely high. This results from the fact that expensive facilities are necessary in order to produce high-quality steel. The plant envisioned would produce only two heats of steel per day. If additional scrap could be obtained, the cost per ton of steel produced would be substantially reduced because of smaller fixed charges per ton of product. The plant described above could produce about 25,000 to 30,000 tons per year, and achieve a considerable reduction in capital charges; but in the absence of additional suppliers of domestic scrap, the importation of expensive pig iron would be necessary.

3. Conclusion

The following important considerations indicate that although it would probably be possible to produce steel economically in Iraq, a steel furnace should not be installed until the rolling mill is in successful operation:

1. The establishment of a rolling mill has a clear logical priority. Without it there would be no demand for the steel produced. The possibility of establishing a steel foundry is considered below, but large quantities of steel are not likely to be required.
2. New labor and management skills would be required by a steel mill; and, although they could be developed, it would be better not to impose too heavy an initial burden.
3. The investment outlays involved are large and it would be preferable to spread the investment spending over a period of several years. Similar considerations indicate that additional equipment for smelting imported pig should not be installed until the scrap refining furnace is in operation.

4. Special Problems

Although there are good prospects for ultimate economic success, several factors may seriously affect the chances of immediate commercial profitability:

1. The technique of manufacture is comparatively advanced and requires good management, scientific knowledge, and technical skill. Some years may pass before these are successfully developed.
2. The high investment cost of a modern steel plant imposes very high capital charges. Although firms that have established new plants in other countries face the same difficulties, many companies operate equipment purchased many years ago when prices were much lower, and now reap the advantages of very low capital charges.

These dangers must be carefully weighed by the Board, but it should be remembered that skills will never be developed until plants are built. Also, investment costs are more likely to rise than fall. A larger market would be a considerable advantage and, although a case might be made for postponing the construction of a steel mill until demand grows, the existence of a steel mill in Iraq would itself contribute to an expansion of demand. It is impossible to forecast satisfactory economic results in the early stages of operation. Such results seem likely on the basis of the assumptions made in this report, but firmer statements are not justified. As the demand for steel products grows, however, profitable operation and a satisfactory return on the capital invested seem to be assured.

5. Means of Implementation

The manufacture and rolling of steel is a comparatively advanced industrial operation and requires skillful management, metallurgical and engineering knowledge, and a body of reliable workers. There is little doubt that successful operation is possible, and the following procedure is offered as a guide to the successful establishment of a steel industry in Iraq.

1. Tenders for a rolling mill of the type described above should be sought. Particular specifications need not be drawn up because Iraq's needs can be satisfied with a mill of standard manufacture. Tenderers should be asked to allow for the future addition to the plant of:
   a. An 18-ton electric furnace to smelt scrap and a small steel-casting shop.
   b. An ultimate increase in furnace capacity and the addition of equipment that would make it possible for the plant to use pig iron as well as scrap.
2. An agreement with one or more European exporters should be obtained that supplies of steel re-rolling billets at a maximum annual rate of 57,000 tons will be available for at least five years from the opening of the mill.
3. A group of at least three or four students trained in chemistry, physics, or engineering to university-degree level should immediately to sent to European or American universities to take courses in metallurgy. After their training, an arrangement with a steel company should be made by which these students can gain practical experience in mill and furnace operation.

D. STEEL FOUNDING

The casting of steel is a more difficult operation than the casting of iron and so far has not been attempted in Iraq. It is impossible to estimate the market demand for steel castings. They are reported in the import returns with cast iron and several other items, but it is very probable that Iraq is currently using steel castings in quantities that would not justify the establishment of a foundry. Potential demand, however, may be significant. At the moment, machines are often repaired by installing iron castings that cannot be relied upon to withstand even minor strains and shocks. If steel could be cast in Iraq, there is no doubt that engineers would use increased quantities of steel castings for many different purposes. The railway workshops would have substantial requirements and the Central and Mobile Machine Shops recommended elsewhere in this report could undoubtedly absorb increasingly large quantities.

It would be impossible to estimate what tonnage of castings would be required, and difficult to justify an electric furnace to melt local scrap for foundry use. On the other hand, if the recommendation to install steel furnaces to provide ingots for a rolling mill is accepted, it would be wise to install a small foundry at the same time. Comparatively little additional equipment is needed, the cost of which would not exceed ID 10,000. Founding on only one or two days each week, largely on the basis of consumer's patterns and core boxes, would provide a valuable service to Iraq's industry that might soon become very profitable. A serious limitation, however, remains. Steel scrap availability is unlikely to exceed 10,000 tons a year for some time, and an additional use for domestically made steel would require larger imports of more expensive foreign billets.

E. RECOMMENDATIONS

1. It is recommended that no further consideration be given to proposals to produce iron in Iraq because domestic ore deposits are inadequate, and the use of imported ores does not offer any possibility of economic success. If larger high-grade ore deposits were discovered in Iraq, further consideration would determine whether their iron content and location justified the establishment of an iron making industry.
2. It is recommended that a steel rolling mill be established in Iraq.
3. It is recommended that a furnace to make 9,300 tons of steel from domestic scrap each year should be added to the steel mill at a later date to make billet-size ingots. A small steel foundry might be established at the same time.
4. It is recommended that, when the furnace is in successful operation, additional steel furnaces and equipment to melt imported pig iron or scrap should be considered in the light of import prices and world supply conditions.
5. It is recommended that the present ban on the export of steel scrap be maintained. Steel scrap that is melted and eventually cast or rolled into steel products will save Iraq many multiples of the foreign exchange that its export would secure.

II. METAL PRODUCTS

A. INTRODUCTION

The term ''metal product industries'', as it is used in this report, includes an extremely broad variety of manufacturing plants, ranging from primitive, one-man establishments to large factories which produce complicated metal products requiring the use of advanced manufacturing techniques and modern equipment. It is difficult to define the exact place of these industries within the economy because metal products are produced for consumer, agricultural, and industrial markets and thus form an important base for industrial growth in nearly every field under study. This report deals with metal product industries from the point of view of similarity of markets and marketing channels. Products that find their end use in the same or similar markets and which reach them through similar or identical channels have been discussed together. It is possible to group metal product markets into four main categories:

1. Products used by the building and construction industries.
2. Products supplied to the household market.
3. Products and services for agriculture.
4. Other service industries.

This method of treatment shows very clearly the close relationships between many apparently different types of metal products and, in terms of industrial opportunities, serves to point out possibilities of manufacturing various products within individual plants.

Metal product industries play a vital role in economic growth. Not only do they provide very large numbers of products that would otherwise have to be imported with consequent delay and loss of foreign exchange, but they provide a most valuable support to other segments of the economy. They produce spare parts for and services to other industries and provide important external economies. In the industrial countries their growth was necessary before modern methods of large scale production could be introduced, and modern large scale industry depends upon the existence of thousands of small metal product plants that can supply sub-assemblies and specialized components. While modern methods of mass production would not be appropriate in Iraq for many years, the growth of metal product plants will be prerequisite to their ultimate establishment.

A field as broad and diverse as that of metal product manufacture cannot be treated in great detail, but an effort has been made to indicate the immediate and potential industrial opportunities and at the same time to outline the nature of the general measures that should be taken to ensure the healthy and rapid growth of the metal-using industries. It is unlikely that the Board will wish to take a direct interest in the industrial opportunities outlined below. Individually they are comparatively small. Development Board action is, however, necessary in this important field and should be directed towards the three following problems:

1. Skilled labor supply. A comparatively high level of labor skill and training is necessary in almost all branches of the metal products industries. The problem of skilled labor availability and training is discussed elsewhere in this report; and here it is necessary only to point out that without a considerable increase in the quantity and quality of skilled workers, the development of the metal product industries will be very adversely affected.
2. Provision of technical information and assistance. Metal product industries have a continuing need for advanced technical information and assistance if competition with imported products is to be successful. Advances in various fields of technology must be brought to the attention of manufacturers, and technical assistance must be provided for them. In other countries, the flow of ideas is facilitated by trade journals, professional societies, and many other means; in Iraq the Development Board should assist in this very important matter by strengthening the existing technical departments of the government, establishing additional agencies for the propagation of up-to-date technical information, and maintaining and improving manufacturing standards.
3. The provision of financial assistance. Comparatively large investments are involved. Machine tools and other types of equipment will have to be imported at high cost. Many companies in the industrial countries have purchased their equipment over a very long period from the profits they have earned. In Iraq a much quicker process is necessary, and financial assistance through the appropriate financial institutions should be made available by the Board.

B. RECOMMENDATIONS

1. It is recommended that the Development Board indicate to the Industrial Bank that it will be willing to provide funds at an annual rate of ID 300,000 for the Bank to encourage well-considered plans to establish and expand the following manufacturing and service facilities.
   a. Metal doors and windows.
   b. Pipe fittings.
   c. Air coolers.
   d. Kerosene-fired water heaters and stoves.
   e. Metal furniture.
   f. Refrigerators.
   g. Aluminum kitchen ware.
   h. Solar stoves.
   i. Agricultural machinery spare parts.
   j. Central machine shops and foundries in Baghdad, Kirkuk, Mosul and Basra.
   k. Mobile Agricultural Repair Shops.
   l. Central garage in Baghdad.
2. It is recommended that technical assistance be provided by the Development Board, through the appropriate agencies discussed elsewhere in this report,

to businessmen who wish to expand or establish metal products industries. This technical assistance should be provided for both large and small enterprises.

3. It is recommended that a Department of Standards be established in Iraq to develop and enforce a Manufacturer's Code in cooperation with manufacturers. This code should serve to increase the acceptance of domestically manufactured products by the Iraqi public. The Department of Standards should become a part of the Department of Industry, but should call upon the agencies providing technical assistance for guidance in developing the codes and improving manufacturing techniques.

C. PRODUCTS USED IN BUILDING AND CONSTRUCTION

1. Metal Windows and Doors

An immediate opportunity exists for expanding and improving the production of metal windows and doors in Iraq. At present the production of metal windows and doors is carried on in numerous small plants throughout Iraq and in one large factory. Domestic production has increased and now satisfies about 80% of the total demand. Demand is, however, likely to increase very rapidly during the next five years as a result of increased private building and government rehousing plans. In the section of this report that deals with the building industry, it has been assumed that by 1960 total house construction will have risen to 22,000 each year. This would lead to the increase in the demand for steel doors and windows shown in Table 80:

TABLE 80

STEEL DOOR AND WINDOW DEMAND

		METRIC TONS	
		1954	1960
Steel Windows -	Private Housing	3,650	5,450
	Government Housing	-	2,250
Steel Doors -	Private Housing	1,100	1,630
	Government Housing	-	900
TOTAL		4,750	10,230

At present, about 30% of the total domestic output is supplied by one large factory and the remainder by numerous small shops located in various parts of the country. Unfortunately, the smaller manufacturers are responsible for the inferior quality of much of present window and door production. Manufacture of standard, high-quality products requires the use of jigs, fixtures, and welding machines which, because of cost and space requirements, are beyond the means of many of the smaller shops. In some cases, however, smaller manufacturers could expand and improve their facilities if capital and technical assistance were available to them. The Development Board should encourage the growth of

these smaller manufacturers by well-directed financial and technical aid that would provide the construction industry with an improved source of supply of metal doors and windows. Future expansion of housing construction will provide a market base adequate to sustain increased output from a number of expanded smaller shops and additional larger plants. Competition from low-cost products made possible by large-scale production methods might drive a number of smaller shops out of business, but it is to the interest of the economy as a whole that the general level of productive efficiency should be raised. The small quantities of labor released in this way would be immediately absorbed by other metal product plants.

2. Pipe Fittings

Total annual sales of cast iron and steel pipe fittings are estimated to be about ID 85,000. Increased building and construction and a higher level of industrial activity will raise this figure substantially; by 1960 it is likely to amount to at least ID 150,000. Cast iron pipe fittings are simpler and less expensive to produce than steel fittings, but the iron would have to be imported. This should not prove to be a serious difficulty: only comparatively small supplies of pig iron would be necessary. The production of cast iron fittings should be increased immediately and the production of cast steel fittings left to the casting shop recommended in the steel section of the report.

It is possible to produce cast iron pipe fittings in any medium-sized metal product plant that possesses foundry and machine shop facilities. A separate plant is not recommended at this stage.

D. HOUSEHOLD-PRODUCTS MARKET

Increased building construction will lead to a substantial increase in the demand for household goods. It is impossible to offer detailed recommendations because future demand cannot be estimated, but important industrial possibilities will undoubtedly arise. Although fairly high investments and a skilled labor force are required, the industrial equipment itself is in most cases very versatile; plants can produce a wide range of products and when it is necessary, make a very rapid change to other products. Suggestions are offered as indications of some of the opportunities that should be encouraged.

Many of the products in this group are likely to meet serious consumer resistance as a result of the marked preference for imported consumer goods that exists in Iraq. This situation is commonly met in countries that are industrially underdeveloped, and special steps must be taken if the domestic production of consumer goods is to be expanded. Detailed proposals to overcome this difficulty are presented in the section of the report that deals with market development, but attention is drawn at this point to the possibility of manufacturing goods under license agreements. It might be possible to arrange with established foreign manufacturers to produce in Iraq goods with well-known foreign trade names. Agreements of this kind make it

possible for newly industrialized countries to draw upon established technical knowledge and avoid the costs and delays of research or consumer education. They frequently offer the additional advantage of providing the services of foreign technicians to train local labor and may in some cases offer sources of foreign capital and management. The normal procedure is, however, to pay a license fee based on the number of products sold and to undertake to maintain certain standards of quality in return for the right to use well-tried specifications and trade names. Assistance in negotiating license agreements should be given by the Government Departments responsible for technical assistance to industry; the Industrial Bank, and the Directorate General of Industry of the Ministry of Economics should be requested to offer their services.

1. Air Coolers

Sales of air coolers in Iraq amounted to 1,700 in 1954; of these almost 45% were manufactured by the one local manufacturer and the remainder were imported from the United States. Because of the particular suitability of air coolers for Iraq's climate, domestic demand is likely to grow substantially in the future. Export possibilities also exist. Although at the moment only 5% of the domestic output is exported, it should be possible to compete with American models in Middle Eastern markets and establish an important export trade.

Production in the present plant could be expanded and an additional plant should be considered. Shortage of skilled labor is already causing difficulty, but it should not be impossible to expand the labor force through the extension of the present training program. Marketing channels are not well developed. They should be improved as a part of a wider program to bring locally manufactured goods before the public.

The quality of the locally made cooler is high and steps should be taken to safeguard this position by the establishment of a Government Standards Department that would lay down minimum standards of quality for domestic and imported products. A recommendation that a Government Standards Department should be established is made elsewhere in this report.

2. Kerosene Water Heaters and Stoves

In 1954 approximately 2,600 water heaters and 8,000 stoves were imported. Neither product is manufactured in Iraq but demand is growing and consideration should be given to this industrial opportunity. Both products could be manufactured in the same plant. Marketing channels are similar. As in so many other fields, skilled workers would be needed, and the difficulty in finding them is likely to be a limiting factor. Investment costs for a plant to produce Iraq's entire current demand for stoves and heaters should not exceed ID 20,000. Manufacturing, marketing, and labor factors strongly favor a license agreement in this case and a plant should not be planned until such an agreement has been negotiated.

It might be possible to produce kerosene-fired wall or floor furnaces in the same plant. These products are not at present sold in Iraq; but they

find a ready market in many other parts of the world, and Iraq's building program, winter climate, and rising income levels indicate that markets may be developed in the foreseeable future.

3. Furniture

The metal-furniture industry was established in Iraq on a large scale less than 10 years ago. There are now several large factories manufacturing a variety of products that range from inner-spring mattresses to office desks, and it is understood that another factory will be established shortly. Exact details of the industry's output are not available but according to manufacturers' estimates, it is within the ID 300,000 to ID 400,000 range. In spite of rising domestic production, imports have increased rapidly (Table 81):

TABLE 81
FURNITURE IMPORTS

	TONS	VALUE ID
1950	496	70,749
1951	378	44,159
1952	548	86,633
1953	817	149,176
1954	1,173	186,569

The shortage of wood in Iraq precludes serious competition from wooden furniture, and substantial growth in demand for metal furniture seems assured. Recent growth is estimated at an annual rate of about 15%. Present plants should be expanded and new ones established.

In contrast to the practice in the wood furniture industry, custom manufacture is the exception. Standardized products are manufactured on what approaches a production-line basis. Investments of from ID 50,000 to ID 100,000 are involved for medium-sized plants. Production is on a fairly large scale and the demand for skilled labor is high.

An interesting recent development of laminated plastic coverings for tables has been introduced. This material can be used with wood or metal furniture and has been in great demand in other countries, particularly for kitchen use. It is at present imported into Iraq and its domestic production must await the development of a basic chemical industry and the growth of the advanced skills that its manufacture requires.

4. Refrigerators

Middle East climatic conditions make domestic refrigeration essential for the preservation of food and the maintenance of health. Demand for domestic refrigerators has increased substantially in recent years and reached a total of 2,756 imported units in 1954. Demand will probably continue to increase in future years, and the manufacture of small, low-cost refrigeration units in Iraq should be considered. General manufacturing techniques are similar to those required for stoves, water heaters and room heaters, with the

important exception that certain components such as motors and controls would have to be imported for some time to come. Imported components for a small refrigerator that could be sold for ID 60 to ID 70 would amount to about ID 25. Investment costs for a plant to produce 3,000 units each year should not exceed ID 15,000. An existing metal product manufacturer should be encouraged and assisted to take up this opportunity. Manufacture could be conveniently combined with the manufacture of stoves and heaters.

5. Aluminum Kitchen Utensils

An aluminum utensil industry has recently been established in Iraq. At present five manufacturers convert approximately 1,000 tons of imported aluminum sheets into cooking utensils of various kinds. The growth of the industry can be seen from Table 82. Almost the entire tonnage of imported aluminum is used by this industry.

TABLE 82

IMPORTS OF ALUMINUM[1]

Year	Metric Tons	Value ID
1950	541	118,296
1951	449	110,630
1952	475	136,402
1953	651	169,489
1954	956	229,655

[1]Unworked in bars, wire, sheets, slabs, leaves, granulated or powder form.

There is considerable competition among manufacturers, and some excess capacity. However, future growth of the home market for cooking utensils seems assured, and there is a healthy base upon which the industry can readily expand. No immediate attention is required by the Development Board, however, because a nucleus of experienced manufacturers exists, and it can be assumed that these manufacturers will increase the rate of production as market demands grow.

An interesting and important development in the field of aluminum is the recent establishment of an aluminum sheet rolling mill in Baghdad. This plant will roll sheet aluminum from imported ingots and will thus serve as a source of raw material for the aluminum kitchen utensils manufacturers. In addition, rolling mill facilities will permit expansion into the production of aluminum pipe and corrugated aluminum sheet, items that will find considerable use in the construction industry. Such expansion plans have been made and they should be regarded as a strong contribution to the future growth of a diversified aluminum metal product industry. Development Board interest in this form of expansion is not required on a direct basis, but additional capital or technical assistance should be provided when it becomes necessary.

6. Solar Stoves

The solar stove is a new product which may have large-scale application in Iraq. World technology has in recent years evolved a number of simple types of solar stoves that are designed to utilize the sun's energy for the cooking of food. A well-designed product could find a broad market among large segments of the population that, at the moment, are unable to afford kerosene stoves. Manufacturing techniques are quite simple; a solar stove is now being produced and sold in India for approximately five dinars. Recent work in the United States has indicated that a simple type of solar cooker could be produced to sell for about two to three dinars. In view of the apparent suitability of this product to both climatic and income conditions in Iraq, it is recommended that immediate investigation of the possibility of manufacturing it locally be undertaken.

E. PRODUCTS FOR AGRICULTURE

In 1954, total imports of agricultural equipment amounted to ID 617,000. A large number of items were included in this figure and the demand for individual items was comparatively small. Approximately 20% of the imports were in the form of spare parts. Government action in the fields of irrigation, land reclamation and distribution, and the provision of agricultural credit will undoubtedly lead to an increase in the demand for agricultural machinery. However, it is impossible to predict the size or pattern of future requirements - which will depend, to a very large extent, on greatly improved maintenance facilities, and on success of Government demonstration and promotional activities designed to convince the farmers of the value of agricultural equipment to them. The recent transfer of the Directorate of Agriculture Machinery and its conversion into a training school for drivers and mechanics will lead to a desirable improvement in maintenance; but the closing down of its rental and demonstration activities will leave a serious gap in the Government's agricultural program. Nevertheless, the demand for agricultural equipment will probably expand during the next few years and an important industrial opportunity will ultimately appear. At the moment, demand is insufficient to justify the establishment of plants to produce agricultural machinery in Iraq.

Manufacturing techniques are advanced and require large numbers of skilled workers and fairly heavy capital investment. A well-developed metal products industry is also necessary to provide the large proportion of components that are usually purchased from outside by manufacturers. For these reasons the production of agricultural equipment in Iraq is not recommended at the moment. An industrial opportunity in this field does, however, remain. Probably half the imports of agricultural equipment spare parts could be produced in Iraq with considerable saving in time and foreign exchange. Spare part manufacture could be begun more modestly than equipment manufacture and would provide the knowledge and skill upon which an agricultural machinery industry could be built in the future. Many spare parts could be made in shops possessing machinery facilities. New plants would not be necessary.

It is recommended, therefore, that manufacturers, and the Central Machine Shops when they are established, be assisted in obtaining license agreements to produce agricultural equipment spare parts in Iraq. If this venture proceeds satisfactorily, production can be expanded to include the manufacture of attachments and a certain number of items of equipment.

F. SERVICE INDUSTRIES

The pace of industrial development is dependent upon the development of a broad variety of service industries that are difficult to classify. Frequently the line between maintenance and small-scale manufacture, particularly of spare parts and sub-assemblers, is very difficult to draw. There are many cases in the industrial countries of small repair shops growing into full-scale manufacturing plants. Thus, the successful development of Iraq's future industries will depend on the availability of large numbers of small- and medium-sized plants that can provide spare parts, machine servicing and vehicle maintenance. The Board should take positive steps to assist this essential segment of the industrial economy by the provision of capital and technical assistance. Action of this kind will have valuable results; but the successful implementation of an industrialization program requires more urgent measures, and it is recommended that the Board should take immediate steps to facilitate the establishment of Central Machine Shops and Foundries in Baghdad, Kirkuk, Mosul and Basra. These plants should be required to provide mobile repair units for the maintenance of agricultural machinery. A Central Garage should also be established.

1. Central Machine Shops and Foundries

Iraq's industry depends for its spare parts on foreign suppliers and a small number of generally inefficient local machine shops. The imported supplies are very expensive, frequently involving long delays, and the local products are of very poor quality. Manufacturers have consistently pointed out that one of their major problems is in obtaining spare parts, subassemblies, and product components. A well equipped and staffed Central Machine Shop and Foundry could make an important contribution to its solution.

There is an immediate need to establish a Central Machine Shop and Foundry in Baghdad that should be followed by the establishment of smaller shops in Kirkuk, Mosul and Basra. A fully equipped shop suitable for Baghdad's needs would require an investment of between ID 200,000 and ID 250,000 and a somewhat smaller sum in the other three towns. It would be very difficult to find a sufficient number of skilled workers for these shops, which would therefore have to begin operations with a small group of foreign and Iraqi mechanics who should be responsible for training larger numbers of semi-skilled men. After the initial difficulties had been surmounted, it might be possible to produce by apprentice and training schemes a continuous supply of trained labor for Iraq's expanding industries. This supply would provide further justification for financial assistance both in the form of a training grant and the provision of capital to entrepreneurs.

Financial success could be assured by the adoption of the following procedures:

1. Agreements should be signed between the Central Machine Shops and local manufacturers, heavy equipment dealers, contractors, and Government Departments to carry out repairs and maintenance. These agreements should lay down the minimum number of hours of work that would be paid for each month in return for guaranteed priority services. Such arrangements have worked well elsewhere because they ensure a minimum income for the repair shops and priority service for the customer.
2. The Machine Shops should undertake the manufacture of spare parts and certain manufactured products. Lack of spare parts has seriously hampered the use of agricultural equipment in Iraq. The annual imports of spare parts for agricultural equipment amount to about ID 125,000. It would be impossible to manufacture domestically all the spares required, but it should be possible to produce some of them on standard machine-shop equipment. Eventually, more complicated items could be manufactured, including cultivators and plows that could be produced under license or under special brand names.

2. Mobile Repair Units

The Central Machine Shops should organize Mobile Repair Units to maintain agricultural equipment in the Liwas. Mobile units consisting of trucks, and trailers containing light metal-working tools, welding equipment, and a supply of spare parts, should operate from each of the Machine Shops to service agricultural areas that could not justify permanent repair facilities. Further Government assistance might be initially required to establish these mobile units, but eventually they would probably be self-supporting.

An arrangement of this kind exists in Turkey. The Turkish Government Agency, DONATIM, maintains eighteen Central Repair Shops in the agricultural districts from which Mobile Repair Shops and a fleet of lightly equipped jeeps operate. Their operations, with the financial support of the government, are considered to be very satisfactory. These repair shops are not capable of servicing total agricultural maintenance requirements, but as demonstration centers they have served to stimulate entry into the field of numerous private organizations. This activity is supplemented by a recently opened mechanical training school that will produce 150 automotive and agricultural repair teachers each year. These newly trained teachers will be able to add substantially to the skilled labor force within a fairly short period of time.

3. Central Garage

The number of motor vehicles in Iraq has grown from 19,000 in 1950 to 29,900 in 1954, and further rapid expansion will undoubtedly take place during the next few years. Repair facilities have not kept pace with this increase in numbers and serious difficulties in maintaining heavy transport vehicles have already arisen. Inability to maintain transport fleets would

seriously reduce the rate of industrial advance and would prevent the successful outcome of the Board's industrial plans.

A Central Garage could provide comprehensive repair facilities with a large range of spare parts, and reduce both costs and wasted time. It should try to introduce preventive maintenance procedures for private and industrial customers; a large proportion of vehicle breakdowns are due to the absence of scheduled maintenance. It would be an important training ground for skilled labor, and would provide an additional justification for Development Board assistance.

An investment of about ID 50,000 would be necessary. Some private capital would probably be available. It is recommended that the Development Board encourage and assist this important venture.

G. DEPARTMENT OF STANDARDS

An important contribution to the future growth of the metal product industries could be made by the establishment of a Department of Standards in Iraq. It has been found in many other countries that the establishment of a department, the principal function of which is to develop and enforce a Manufacturer's Code with the cooperation of the manufacturers themselves, is of considerable importance. A Department of this kind appears to be particularly appropriate for Iraq because of widespread mistrust of domestically manufactured products. The reputation of Iraqi products would be improved if a procedure were developed by which specific manufacturing standards could be developed for various products together with facilities for comparison testing of domestic and imported products.

This proposal complements the proposals made elsewhere in this report to extend the technical assistance facilities of the Industrial Bank and to undertake a market development program. Although the Department's work should be carefully coordinated with that of the Industrial Bank, its main function should be to raise the general level of manufacturing efficiency, and to improve product acceptance throughout industry rather than assist particular firms and plants.

1. Functions of The Department of Standards

The Department of Standards would be concerned with drawing up product specifications and standards, testing and endorsing standards of quality, and assisting manufacturers to overcome their difficulties with equipment. The inspection and testing of imported manufactured products is now carried out by the Department of Industry of the Ministry of Economics; the new organization should be constituted as a new sub-department.

The specific functions of the proposed body should be:

1. To establish and supervise domestic standards by laying down, in cooperation with manufacturers, a code of manufacturing and quality standards for domestically manufactured goods.
2. To set up a product evaluation service. Products that satisfy the required standards might be given a Seal of Quality, but it would be very important

to ensure that this seal was awarded only to products that would prove their worth to consumers. If this were not done, the whole scheme would soon fall into disrepute and fail entirely to achieve its purpose.

3. To supply manufacturing information and product specifications to manufacturers or prospective manufacturers free of charge or at very low cost. In this connection it might keep lists of foreign concerns that were prepared to negotiate manufacturing license agreements and/or to consider establishing plants in Iraq themselves in joint venture with Iraqi businessmen.
4. To collect information and statistics about products manufactured in Iraq and disseminate information concerning new product opportunities.
5. Generally, to forward and foster the interests of manufacturing concerns in Iraq.

2. Personnel and Facilities

It would be necessary to appoint a small group of men of high technical competence and wide industrial experience to the Department of Standards. They should have had experience in several manufacturing industries, preferably in the metal working field. At least one of them should be competent to make product evaluation studies and develop product manufacturing codes.

Adequate clerical assistance and a small testing laboratory should be provided. The laboratory would be used for testing and evaluating the goods brought for approval and comparing them with imported items. Certain tools and testing instruments would also be required.

3. The Establishment and Operation of a Department of Standards

The establishment and initial development of the proposed organization could be completed in about one year. During this period, it would be necessary to make contacts with manufacturers, collect details of all products, and to make initial comparisons with imported products. On the basis of this work the specifications or codes could be laid down. It would be necessary to obtain the complete cooperation and understanding of the manufacturers, although the Department should at all times maintain its complete independence. Even during this early stage certain manufacturing inadequacies might be remedied and a beginning made in the Department's task. Final success can only be assured if manufacturers can be convinced of the eventual benefit to themselves of improved standards. The task of convincing them of this should be an important part of the first year's work.

After the quality supervision function has been established and results appear in terms of product improvement, manufacturers who meet the required standards should be awarded a Government seal that would be offered to the product. The strict adherence to the manufacturing codes must be assured, by means of a quality testing procedure, for continued qualification to retain the seal. In addition to product quality standards, the Department could also establish and supervise product safety standards in terms of user

health and safety.

There are several products to which a Manufacturer's Code could be applied with profit. The first of these are metal windows and doors. Large amounts are now sold to contractors despite their low quality. By drawing up manufacturing and product specifications for metal windows and doors, it would be possible both to aid those manufacturers responsible for the poor quality product and to provide a standard of comparison that would enable a contractor to select a better quality window or door. If he prefers the poorer product, he could adjust his purchase price accordingly. The production of coolers is another field that would benefit from the establishment of the Department of Standards. Domestic coolers, despite their high quality and lower price, are at a disadvantage in the market in comparison with imported coolers. There is substantial belief that domestically manufactured coolers are considerably inferior to products of foreign manufacture, a belief which could be largely dispelled by the provision of standards of comparison.

CHAPTER V

ADMINISTRATION AND FINANCE OF THE INDUSTRIALIZATION PROGRAM

CHAPTER V TABLE OF CONTENTS

ADMINISTRATION AND FINANCE OF THE INDUSTRIALIZATION PROGRAM

		Page
I.	INTRODUCTION	321
II.	DEVELOPMENT BOARD'S POLICY-MAKING FUNCTIONS	322
III.	RECOMMENDED PROGRAMS	324
	A. Stage One	324
	B. Privately Managed Projects	324
	C. Plants that are Suitable for Private Development and that cannot be Privately Financed	324
	D. Stage Two	325
IV.	THE INDUSTRIAL BANK OF IRAQ	327
V.	PROPOSED INDUSTRIAL DEVELOPMENT FINANCE COMPANY	330
VI.	APPENDIX - THE INDUSTRIAL DEVELOPMENT BANK OF TURKEY	334

I INTRODUCTION

The establishment and operation of industrial undertakings requires methods and judgments which are radically different from those for engineering projects such as dams, irrigation systems, highways, schools, and public buildings. Engineering projects deal primarily with physical units. Industrial projects deal with engineering considerations only in part. They also require complex, day-to-day decisions involving markets, financing, personnel, and many other subjects. The ultimate test of the engineering project is whether it will do the job for which it was designed. The usual test of an industrial project is its profitability. An industrial project may result in a very fine product that meets all the specifications for which the plant was designed and yet may be a failure for the simple reason that the product cannot be sold in sufficient volume at a high enough price to make the project profitable.

The establishment of an industrial project involves much more than building a plant and installing machinery. Ordinarily the design of an industrial plant should be accomplished in cooperation with the management that will run it. A plant in which the latest automatic machinery is installed may not be well adapted to a country with low wages and a small, perhaps uncertain, market. Under these conditions, which are often found in Iraq, good managements may prefer a minimum investment in fixed capital and a maximum of flexibility, at some sacrifice of efficiency; they may prefer something less than the latest model of automatic equipment. Flexibility is required because the plant must produce for a market which is small, uncertain, and subject to change. Some of the most spectacular failures in the American textile industry involved plants that were designed to produce a certain line of products at the lowest possible cost. The failure lay in the fact that the market would not absorb the products of these large and expensive plants at profitable prices.

For all these reasons, organizations and procedures for designing, building, and operating industrial plants are proposed in this report that are different from those employed by the Development Board for engineering projects. The organizations and procedures proposed have been effective elsewhere in the world and have the highest promise of success. The plan proposed draws upon experience in Puerto Rico, New England in the United States, in Canada, Great Britain, Turkey, and other countries. It draws heavily upon experience of areas that have been successful with industrialization. It would be unwise for Iraq to pattern its program upon that of other countries but little farther advanced in industrialization and with little or no history of successful methods.

II. DEVELOPMENT BOARD'S POLICY-MAKING FUNCTION

The Development Board is established by law as the major center of responsibility for formulating and directing programs for the country's economic development. The studies which it must conduct and review, the policies which it must determine, and the construction of projects which it must contract for and supervise will absorb a great proportion of its time. As Lord Salter has ably stated in his recent review of the Board's program, the Board will be more than fully occupied doing those things which Governments must do without at the same time taking on tasks which can be and have been performed elsewhere by private citizens. It is concluded, therefore, that with respect to the industrialization program, the minimum task of the Board should be the following:

a. To determine whether, to what extent, and with what priority the development of specific industries fits into its overall program for the economic development of the country;
b. To determine the approximate dimensions of the project in terms of investment and location, together with the need for additions to such facilitating services as power, water, fuel, transportation, and means of marketing;
c. To decide whether the importance of the project in the development program requires that it be carried out by Government, or whether it can be entrusted to development by private persons.
d. The setting up or approving of the organization (public authority or joint stock corporation) which will be charged with the execution of the project - from construction to operation and management.

It should be noted that these minimum demands of the industrialization program upon the Development Board do not include design, construction, or operation of any plants by the Board itself. With respect to the industrialization program, the Board would be well advised to follow Lord Salter's suggestion and to keep policy and administration separate. It is widely recognized that good business management requires that those responsible for the success or failure of an undertaking be given the authority, subject to applicable laws and regulations, to make the business decisions that will determine the success or failure of the undertaking. If the Board makes some of these decisions and the management makes others, responsibility cannot be fixed; friction will result, and ultimately the blame for any shortcomings of the project will be placed upon the Board because it is within the Board's power to delegate and to place responsibility where it belongs.

Ideally, industrial projects can be set up more rapidly and at less cost to the Government if they can be undertaken and financed privately. In view of the limitations on the supply of private capital and the genuine scarcity of a large group of business entrepreneurs and managers, at the beginning of industrialization, a two-stage program is proposed. In the first stage, the initiative and direction would rest largely with the Development Board and the Government-owned and controlled Industrial Bank. In the second

stage, which might be expected to begin in a few years, the bulk of the new industrial projects could be undertaken privately, with some assistance in most cases in the form of loans from a proposed Industrial Development Finance Company. In the second stage as in the first, the Development Board would be the policy-making body determining the scope and direction of the industrialization program, but the Finance Company would take over the function of the Industrial Bank with respect to privately financed projects.

III. RECOMMENDED PROCEDURES

A. STAGE ONE

The successful execution of the Industrialization Program requires that a full measure of resources, both financial and administrative, be brought to bear. This should be done by the Development Board with the assistance of of the Industrial Bank that should be provided with additional powers and funds in the manner recommended below. These steps to strengthen the Industrial Bank should be taken immediately and the following procedures adopted.

B. PRIVATELY MANAGED PROJECTS

1. The Development Board should decide, after studying the recommendations made in this study, on a list of the industrial projects that are suitable for operation by private enterprise. It will also have a list of projects not suitable for private operation, such as electric power, gas, and similar public utility projects. The method proposed here does not apply to such projects, which can be handled like other quasi-Governmental projects now in operation; for example, the petroleum refinery and the bitumen plant.
2. The Development Board will then transfer this list to the Industrial Bank, together with a line of credit to that institution. The line of credit will permit the Bank to obtain loans from the Board as funds are needed for putting specific projects into operation. The Bank will lend or invest the funds of the Development Board to finance joint stock companies that will design, build, and manage the plants on the list submitted by the Development Board. The Development Board might safely delegate to the Industrial Bank the power to approve arrangements for all projects in which the private portion of the total capital is greater than 50%.
3. The type of organization required to build and operate privately managed plants should be left to the determination of the owners, provided they are financially and morally responsible. The Industrial Bank should, of course, assure itself that its interests are protected when it helps to finance a project.

C. PLANTS THAT ARE SUITABLE FOR PRIVATE DEVELOPMENT AND THAT CANNOT BE PRIVATELY FINANCED

1. After a reasonable time for study and investigation, the Industrial Bank should report back to the Development Board on projects that could not be successfully established under predominantly private ownership. The procedure for handling this work should be developed in detail through discussion between the Industrial Bank and the Development Board.
2. The Development Board should review the findings of the Industrial Bank on projects that, in the Bank's opinion, cannot be established under private ownership. It will direct the Industrial Bank to establish with Government funds those projects that in its opinion are necessary for the proper

economic development of the country. It will, at the same time, furnish a line of credit on which the Industrial Bank can draw for the purpose of financing these projects.

3. The Industrial Bank will employ experts and consultants and arrange management as required by each project, and it will advance credits or buy shares in each enterprise as may be necessary. It is recommended that the Bank establish joint stock companies in such cases, and that it dispose of its shares in such companies as soon as a profitable market develops for them. So long as the Bank owns a majority of the shares, it should in consultation with the Development Board appoint the Board of Directors.
4. The Development Board should receive periodic reports from the Industrial Bank on its progress in carrying out the tasks that have been assigned to it by the Development Board. In the case of large and important projects, it is possible that the Development Board may wish to require that the Industrial Bank secure final approval on arrangements for financing and managing the project from the Development Board.

It should be noted that this plan is broad enough to provide for the administration of the industrial projects presently under construction by the Development Board. For those projects listed in the letter of H. E., the Minister of Development (reference number 90/2/1930, dated February 12, 1955), except the Northern Power System,[1] a procedure in keeping with the general plan outlined above would be as follows:

The projects under construction or contracted for would be submitted with all details, studies, and reports to the Industrial Bank. The Development Board should request a proposal by the Bank as to how, in its judgment, each project could be managed and operated.

After a reasonable length of time, the Industrial Bank should report back to the Development Board a suggested program that it would carry out as agent for the Development Board and for a commission either (1) to put the plant under private management, or (2) to put it under the management of a company whose shares are owned by the Bank.

If the second alternative only is feasible, the Industrial Bank should be prepared to accept the responsibility for completing the project, obtaining the management, and securing the project suitable operating procedures. The type of management contract best suited for projects that will be Government owned cannot be specified in advance, but advice on the form that management contract should take is offered in the management section of this report.

D. STAGE TWO

Although the procedure outlined in stage one will enable the Board to implement a number of industrialization measures, the Industrial Bank alone

[1]The Northern Power System is a part of the country's power system and should not be considered alone. The planning of the country's power system is a function which belongs properly to the Government of Iraq, and the execution and administration of its plans probably should remain with the Development Board.

would probably not be able to handle all the public and private industrial projects that would be required by the Board. Because Iraq's capital market is under-developed, and sources of private investment funds likely to be limited for many years, there is a serious gap in the financial structure that must be filled if industrialization is not to be impeded. It is, therefore, recommended that an Industrial Development Finance Company be established before the end of the first stage. This proposed new organization should take over the function of the Industrial Bank for privately managed projects and leave the Industrial Bank free for projects that the Board wishes to keep under public control or for which private shareholders cannot be found. This proposal is made with the firm conviction that its adoption would lead to the following results:

1. The development and expansion of economically sound industries in Iraq at a faster rate than could be achieved by present methods.
2. Industrial progress without a severe drain on the resources of the Development Board or its technical and professional staff, whose time is already taxed by other essential projects.
3. Accomplishment of the industrialization program at less cost to the Government than under present procedures; more industry would be achieved for the amount of money available.
4. The attraction of more private capital into industry than the present program under which it is not clear whether private enterprise will have competition from government-owned plants. Thousands of intelligent private people would thus be attracted to work on these problems while, at the same time, the Development Board would keep control of essential policies.

If some such program is not adopted by the Development Board or the appropriate ministry to which the project has been delegated, there will be increasingly difficult decisions on questions of selecting management, determining rates of pay and tenure, deciding which products to make, where to sell them, what prices to charge, how to finance the operations of the project, whether to expand the enterprise and for what purpose, and whether to promote or raise the pay of management personnel employed in the project. The industrialization program could in fact, unless it were delegated in some such manner as that proposed, so occupy the Development Board and the Government that other activities, widely recognized as legitimate functions of government, would suffer and the development program would be seriously retarded.

If the procedures recommended above are adopted, the role of the Industrial Bank will be somewhat changed and a new financial institution will have to be created. Recommendations to this end are made below.

IV. THE INDUSTRIAL BANK OF IRAQ

The Industrial Bank does not pursue a policy of granting loans that are consistent with the Development Board's program; in fact it has virtually no contact with the Development Board. It simply decides each application on its own merits. This is a very unsatisfactory situation that would be greatly improved if the above recommendations were accepted. The Industrial Bank would become a lending agency, subject to the policy direction of the Development Board, for making loans and putting together companies to operate industrial projects that could not be operated privately. It would eventually hand over its function in regard to private financing to the Industrial Development Finance Company. In addition, it would take on the further function of stimulating reorganization, growth, and development of existing industrial enterprises. Its function would be analogous to that of a combination of the former Reconstruction Finance Corporation and the present Small Business Administration in the United States. Similar functions are performed, at least in part, by government owned or financed institutions in several other countries.

The following changes should be made in the control, organization, and operations of the Industrial Bank:

1. The Industrial Bank should be owned by the government but should be under the jurisdiction of the Minister of Development rather than the Minister of Finance. So long as the Minister of Finance advances the funds which the bank employs, he should have the authority to appoint the Board of Directors. It seems inappropriate, however, to the function that the Industrial Bank serves that its board should be appointed by or subject to the control of the Minister of Finance. The Industrial Bank was established to assist industry. The assistance of industry should be consistent with the whole development program of the Iraq government. The Development Board has been charged with establishing policy, and the Minister of Development and the other departments of the government have been given the administration of economic development projects. It would be appropriate for the Minister of Development to appoint the members of the board of directors of the Industrial Bank. A way out of the difficulty, therefore, would be for the Development Board to buy out the interest of the Ministry of Finance in the bank and delegate to the Minister of Development the function of nominating members of the board of directors to the Industrial Bank.
2. The board of directors of the bank should be given final authority on all loans and investments and all the activities of the bank. The relation of the government to the bank should be limited to appointment of the board of directors and to prescribing the basic statutes under which the bank operates. The bank's officials now claim that the bank is independent of government pressure, but it is hard to believe that considerations other than those of sound financing do not enter into some of the decisions when final authority lies with the government.
3. The capital of the bank should be increased to a minimum of ID 5 million

with the understanding that when this sum is paid and fully employed, additional funds will be available in the form of long-term loans at low rates of interest. The additional funds should be supplied by the Development Board.

4. Analysis of loans made by the Industrial Bank indicates that the average term is unusually short in view of the lack of alternative sources of funds. The bank should develop adequate principles for determining what the term of a loan should be and should apply these principles in a systematic way. The present limit of 10 years on industrial loans should be reconsidered and raised to at least 15 years.
5. The limit of ID 10,000 on loans to any one person should be removed. This limit does not apply to advances in which the bank acts as agent for the import of raw materials or the export of products, but it is unnecessarily restrictive. As in the case of the determination of the term of loans, the bank should develop principles by which to judge the appropriate amounts to be loaned.
6. Even in highly industrialized countries it has been found necessary to supply technical and management aid to new and growing enterprises, both to assist them to grow and to improve their ability to raise capital. Experience in the United States, and under the Point 4 program in various countries, demonstrates that assistance of this kind cannot be paid for by the recipients. There are many enterprises in Iraq that could be expanded if proper managerial and technical advice and analyses could be supplied without charge by the Industrial Bank. In many cases the Industrial Bank will make or will be considering loans to these enterprises, and a program of such aid will improve its lending operations. It is recommended, therefore, that the present new enterprises section of the bank be reorganized and expanded to provide management and technical assistance to new enterprises in fields of marketing, production control, budgeting and accounting, engineering, cost analysis, management organization, personnel relations, and such other fields as experience demonstrates may be required. Inasmuch as these services cannot be paid for by the small enterprises in need of them, it is further recommended that the Development Board make an annual appropriation to the Industrial Bank to support such services. An appropriation between ID 25,000 and ID 50,000 per year would appear to be justified. Personnel should be selected after consultation with the technical departments of the Ministry of Economics, the Development Board, and with the Industrial Development Finance Company when it is established. All the organizations concerned with technical assistance should endeavor to co-ordinate their activities and cooperate with each other.
7. The Industrial Bank should consider very carefully whether its operations in the commercial banking field are consistent with the position of the bank proposed in this report. It would seem to be inconsistent for the bank to be carrying on activities in competition with the commerical banks, if these activities can be performed by the commercial banks. The financing of import and export trade, for example, could be conducted by the commercial banks for customers of the Industrial Bank unable to secure credit

on their own names if the Industrial Bank were willing to guarantee the credits. A policy under which the Industrial Bank does not compete with either the commercial banks or the proposed Finance Company would make for better working relations among all institutions concerned.

8. The Industrial Bank should be staffed by, and its salaries sufficiently high to attract, the most capable people who can be obtained. Continuity of employment for a long period of years should be sought because of the great value of experience in this work. The Industrial Bank salary structure should be completely divorced from the salary structure of the government. Its salary structure should be in line with that of private organizations having similar positions. The Industrial Bank has a very important function to perform in assisting the development of industry in the Iraq economy. The foregoing recommendations are the minimum needed to allow the Industrial Bank to perform its function with reasonable adequacy.

V. PROPOSED INDUSTRIAL DEVELOPMENT FINANCE COMPANY

A survey of the financial institutions and the capital market in Iraq indicates that there is a very large gap in the financial organization of the country. This gap is in the supply of equity capital (capital available for the ownership of shares) and in intermediate and long terms loans (for example, loans with a term from one to twenty years). The sources of funds that are available in more highly industrialized countries are undeveloped in Iraq or do not exist at all. The principal source of such capital is, and must for some time remain, the Government itself, and in particular the Development Board to which a large proportion of the oil revenues are allocated for economic development. Iraq must develop means for providing equity capital and loans to private enterprises operating or proposing to operate industrial projects. While the Finance Company proposed here and the Industrial Bank will probably meet the needs of the next few years, additional sources of funds will eventually be needed. Advice on this problem is offered in the section of the report dealing with capital.

The experience of other countries, particularly the United States, Britain, and Turkey demonstrates that industrial development will proceed most rapidly if the talents already available in the Iraq banking system, particularly the commercial banking system, are utilized. Banks have organizations and personnel already well acquainted with many problems of investments and loans. The banks have branches throughout Iraq that are in close touch with local conditions. The banks also have a system of foreign correspondents that can be utilized to investigate foreign managements and to interest foreign capital in Iraq's industrial development. Moreover, businessmen both in and outside Iraq are already accustomed to disclosing to their bankers confidential information about the operations of their businesses, information that they would probably refuse to a government institution until they have done business with it for many years. The benefits available from the private banking system, and from private investors generally, will be obtained by establishing the proposed Industrial Development Finance Company. The purposes of such a company seem to be so consistent with the objective of the National Bank that it would be entirely appropriate for the Governor General of the National Bank to assume the leadership in promoting the company.

The powers and duties of the proposed Industrial Development Finance Company of Iraq would be similar to those of the Industrial Development Bank of Turkey, with some changes designed to fit conditions peculiar to Iraq. The Finance Company would (1) obtain sound management and give business-like supervision to certain industrial projects which the Development Board wishes to establish, and would secure private ownership and management for such projects as soon as possible; (2) make loans with a term longer than one year in order to establish new industries or to expand existing industries in Iraq; (3) participate in the ownership of new enterprises in Iraq with the object of eventually transferring such participation to private investors when the enterprise proved

its ability to operate at a profit; (4) encourage and finance facilities for supplying raw materials to Iraq industries and for providing adequate and efficient marketing of products; and (5) encourage the accumulation of private savings and the investment of them in Iraq industries.

The first problem which will be encountered in any attempt to establish a Finance Company to supply equity capital and term loans to industry is that of obtaining the initial share capital. It should be remembered that the share capital would control the Finance Company, and this should be supplied predominantly from non-government sources if the benefits of wide participation are to be realized.

There is already a precedent in the banking statutes of Iraq that may provide a means for obtaining the share capital of the Finance Company. The commercial banks are required to keep reserves equivalent to 15% of their deposits with the National Bank. However, one third of these reserves may be invested in Iraq Government loans of specified types. This option given the banks with respect to one third of their reserves provides a precedent which might be employed to raise the capital for the Industrial Development Finance Company. The commercial banks of Iraq might have an option of investing one third of their reserves either in Government loans or in the shares of the Industrial Development Finance Company.[1] Inasmuch as the Finance Company is likely to earn a rate of return higher than the rate on Government loans, there will be some incentive for the commercial banks of Iraq to invest in the proposed Finance Company. There should be sufficient incentive to obtain the participation of all the commercial banks in Iraq because the help of all is needed. Shares of the proposed Company could also be offered to the public, and it is to be expected that some business concerns and individuals would find these shares attractive, particularly those who stood to profit by further industrialization of the country, such as suppliers of equipment and construction contractors. To ensure coordination of operations, the Industrial Bank should also be permitted to invest in the Finance Company, provided it acquires only a minority interest, and to have representation on the board of the Finance Company.

It is proposed further that the Development Board advance loans to the Finance Company when it is established. (A creditor who advances loans does

[1]If it should be decided that this is more incentive than is needed, an alternative would be to permit the commercial banks to invest one sixth (or some other proportion less than one third) of their reserves in the Finance Company's shares, provided that an equivalent amount of their other resources were also invested in the Finance Company's shares. The consequences of such an investment in terms of monetary policy would be similar to the consequences of the permitted investment in Government loans, and no new principle of monetary policy would be involved. In fact, the right to invest in the Finance Company might, in part, be left to the discretion of the National Bank and used as an instrument of monetary policy.

not own or control the company, but has special claims on the assets of the borrower in case the loan is not repaid.) The Development Board can advance loans to the Finance Company in a way which will provide the maximum incentive to the banks and to others to invest in the Finance Company. The Development Board should offer a line of credit of ID 6-8 for every dinar raised privately in the form of the sale of shares by the Finance Company up to a maximum total of, say, 20 million dinars. The Development Board might also, as a special incentive, make its loan to the Finance Company at a very low rate of interest for the first five years. Loans made by the Development Board to the Finance Company might be made at a rate of one half of one percent, as in the case of the recent loan to the Industrial Bank by the Development Board. After an initial period, however, consideration should be given to charging a rate of interest to the Finance Company related to market conditions.

The affairs of the Finance Company should be subject to audit and examination by the National Bank, the agency presently charged with performing a similar function with respect to private banks.

It is important to point out that a Finance Company must achieve considerable size and must have considerable funds at its disposal if it is to be successful. It will be necessary for the Finance Company to employ executives of great ability and a staff of professional experts.[1] It will require a staff of technically qualified officials not only to carry out its ordinary banking operations but to offer technical assistance to its customers. The appointment of the technical staff should be co-ordinated with that of other agencies with which it should work in close cooperation. It cannot afford to employ such executives and staff on an adequate scale unless it achieves considerable size. For this reason the Development Board should be generous both in setting the maximum loan that it would make to the Finance Company, and in determining the rate of interest that it would charge. In this connection, the Development Board should keep in mind that (1) the Finance Company will be saving the Development Board cost and delays, and (2) the Development Board, as a creditor, will be entitled to receive interest on any loans which it advances to the Finance Company.

If the Development Board accepts this recommendation, it will not be embarking upon an untried experiment. There has been in existence sine 1950 an Industrial Development Bank in Turkey sponsored jointly by the Turkish Government and the World Bank that will afford considerable guidance to Iraq. Details of the history, constitution and operation of The Industrial Development Bank of Turkey are provided in the appendix to this section. Similar institutions (although differently financed) exist in England, Canada, and in several of the states in the United States. The Small Business Administration and the Reconstruction Finance Corporation in the United States have similar objectives.

[1]A guide for the type of organization and staff needed is to be found in the Industrial Development Bank of Turkey.

Inasmuch as the Industrial Development Bank of Turkey was set up upon the recommendation and with the assistance of the International Bank for Reconstruction and Development, the International Bank for Reconstruction and Development should be requested to assist the Development Board to carry out this recommendation.

VI. APPENDIX

THE INDUSTRIAL DEVELOPMENT BANK OF TURKEY

The Industrial Development Bank of Turkey originated in the desire of Turkey to facilitate the growth of small- and medium-scale private manufacturing enterprises.

At the conclusion of World War II, Turkey requested a half billion dollars of American aid from the United States and received in return an offer of a line of credit of $25 million from the Export-Import Bank, together with a request that Turkey furnish to the bank a description of projects acceptable to it. Turkey, therefore, was early made aware of the necessity for developing a well thought out program.

In 1947, Turkey became a member of the International Monetary Fund and the International Bank for Reconstruction and Development; and the International Bank began work toward formulating a definite program for the economic development of the country. Late in 1948, Turkey was made eligible for aid under the Marshall Plan and at the same time opened negotiations with the International Bank for the financing of projects totalling some $240 million. After discussions, it was agreed that Turkey would prepare a program totalling no more than $50 million, and that the bank would send a mission to Turkey to study the importance of the projects to the Turkish economy.

The International Bank's study of Turkey, issued in 1949, came to the following conclusions: (1) Turkey needed first to improve the transportation and preservation of Turkish produce, and (2) the participation of private enterprise and capital in the development of Turkey should be secured. With respect to the second point, the bank concluded that help should be given toward the development of private enterprise through an intermediary institution. The bank suggested further that the help given to private enterprise should not only be financial, but should also be administrative and technical.

In October 1949, the International Bank sent to Turkey Mr. Harold Johnson, an investment banker, to investigate the means of establishing an industrial credit institution in Turkey. This background together with Mr. Johnson's report contributed much to the original draft for the Industrial Bank of Turkey.

The final draft of the charter was worked out by Mr. Johnson together with a committee composed of the chairmen of some of the national banks, and representatives of the Ministry of Finance and the Ministry of Economy and Commerce. In March 1950, charter members of the new institution accepted the articles of agreement and elected the first board of directors and auditors.

The Grand National Assembly of Turkey authorized the corporation (Law 5660) on March 24, 1950. This law gave certain special privileges to the bank, of which the first was the most important.

1. If the net profits of the bank were not sufficient to pay a dividend of 6% to the shareholders, the Minister of Finance was empowered for a period

of five years, beginning with the date of creation of the bank, to make up the deficiency in the net profits of the bank. Any deficiency so made up would be repaid by the bank to the Treasury out of subsequent profits in excess of a 6% dividend and allowances for legal reserves.

2. As long as the bank did not accept deposits, it should not be subject to Bank Law 2999, the basic law governing banks of deposit.
3. The bonds issued by the bank should not be subject to certain of the limitations of the Turkish commercial code.

The statutes (charter) of the bank set forth the following purposes of the institution:

''A. To support and stimulate the establishment of new private enterprises and the expansion and modernization of existing private enterprises in Turkey.

''B. To encourage and assist the participation of private capital, both domestic and foreign, in industry established in Turkey.

''C. To encourage and promote the private ownership of securities pertaining to Turkish industry, and to assist in the development of a securities market in Turkey.''

In order to attain these purposes, the bank is permitted to engage in the following activities:

1. To extend credit facilities in the form of medium- or long-term loans with or without security, and, when necessary, short-term loans against security.
2. To participate in all types of private industrial enterprises.
3. In certain exceptional cases to establish new enterprises with funds of the bank.
4. To provide technical and administrative aid to clients of the bank.
5. To engage in all types of activity with regard to movables and immovables for its own account or in cooperation with others; to accept and release mortgages taken as security for its claims; and to acquire real estate.
6. To effect the sale of its participations or ownership in industrial enterprises as rapidly as possible in order to make its funds revolve.

The bank was further empowered to ''deal in every kind of banking transaction related to the subjects involved.'' It was also empowered to establish branches, appoint correspondents, and to issue bonds.

The authorized capital of the bank was 25 million Turkish lira (about $9 million), of which 12.5 million was to be paid in before the bank commenced business. In October 1953, an additional 12.5 million lira was raised, bringing up the paid-in capital to TL 25 million, the amount authorized.

The original subscribers to the bank included 13 Turkish and foreign banks[1] and, in addition, a Chamber of Commerce and a few private firms. The

[1]These banks were Is Bank, Ottoman Bank, Yapi ve Kredi Bankasi, Turkiye Garanti Bankasi, Bank of Salonika (Fr.), Turk Ticaret Bankasi (Turkish Commercial Bank), Ak Bank, Banca Eommercials Italiana, Banco di Roma, Tatus Bankasi, Hollantse Bank (Du.), Imar Bankasi, Turkiye Kredi Bankasi.

Is Bank, which is partly owned by the government and in which government influence is strong, subscribed 3 million of the original 12.5 million capital. Approximately 16 million of the present 25 million lira capital of the bank was furnished by the commercial banks.

Upon being established, the Industrial Development Bank immediately began negotiations with the International Bank for a loan. Subsequent to these negotiations, Mr. Norman Tucker, a nominee of the International Bank, was designated general manager of the Industrial Development Bank. The negotiations were concluded and the International Bank granted a loan of $9 million to the Industrial Development Bank in October of 1950. Mr. Tucker unfortunately died in February of the next year. The original loan of the IBRD was for 15 years and carried a rate of interest of 3-3/4%, with the first instalment payable after five years. When the capital of the bank was increased in October of 1953, a further $9 million loan was obtained from the International Bank, this one at a rate of interest of 4-7/8% and a term of 15 years.

From the beginning, the bank has also had a third source of funds - counterpart funds resulting from Marshall aid and subsequent programs. These counterpart funds have been employed with the consent of the ECA and successor organizations, by the bank as agent for the Turkish government and the ECA. About TL 54 million of counterpart funds are currently administered by the Industrial Development Bank of Turkey. For this work the bank receives a commission.

As of December 31, 1953, the total assets of the bank were slightly over TL 152 million.

A fourth source of funds available to the bank (Provided by Article XV of the statute) is the issuance of bonds. The Industrial Development Bank in 1951 floated a bond issue of TL 12.5 million carrying a rate of 4.5% and payable in 15 years. In 1952, another bond issue was made by the Industrial Development Bank at 5%.

The bank availed itself for one year of the privilege of drawing on the Treasury for its dividend. A 6% dividend for 1951 was paid from Treasury funds and the bank is retiring this advance. The government's claim to the repayment of this advance is subordinated to the stockholders' right to the minimum 6% dividend. It should be noted in passing that the advance of the dividend from the government has occurred only once. In subsequent years the bank has earned enough to pay the minimum of 6% and more to its stockholders.

The attractiveness of the bank's shares as an investment medium was demonstrated when the second issue of stock was put on the market in 1953. Six million of the second TL 12.5 million financing was bought by private individuals. The number of shareholders now stands at about 300, whereas the original capital was furnished by only 18 banks and others. The TL 100 share of the bank is currently (February 1955) quoted on the market at TL 108.

The bank is governed by a board of directors of seven members who are elected by the shareholders. One of the members of the board must be elected from a list of candidates selected by the Central Bank of Turkey and must be a member of the banking profession. The others are elected from among the other

shareholders. At present two of the directors are from the Is bank. One is a legal adviser of the Standard Oil Company; one is an agricultural equipment dealer; one is the general manager of the bank (Egeli); one is an architect; and one is an electrical engineer. Government influence in the bank is strong presently, probably through the two directors from the Is Bank.

The history of the bank's operations demonstrates that it has been carrying out its purpose of financing industrial development through private enterprise. In the past year, a special purpose has been added which was not emphasized in the earlier discussions: financing for the purpose of saving foreign exchange by manufacturing goods which were formerly imported. This business may turn out to be less sound than its earlier business because of the artificial advantage created by import restrictions. However, the bank's activities are not limited to this field even at present.

The bank has the field of term loans to industry virtually to itself. There is no conflict between the bank's operations and the operations of the commercial banks that hold the majority of its stock because the latter make no term loans. The average loan runs for about seven years, and the great bulk of the loans is in the category five to nine years. The maximum term is about 12 years. Eventually the bank plans to enter the shorter-term credit field, operating at terms of 9-20 months. Even nine months' credits would not be competitive with commercial bank credits in Turkey, according to a leading Turkish commercial banker.

The great need for longer-term credits is evidenced by the fact that according to the manager of the Industrial Bank's financial department, no project has been financed which did not promise to yield a profit of 20% to 25% after taxes. The term to be given the loan allows for a profit of 10% to 15% on investment to the owner. The profit in excess of the allowed per cent is regarded as available for the repayment of the loan. This remainder divided into the amount of the loan provides a quick calculation as to what the term should be.[2]

Generally the bank lends against the security of a mortgage on immovable property or the guaranty of a bank. In the case of mortgage security, the bank will not advance in excess of 50% of the appraised value of the property. Under Turkish law, chattel mortgages cannot be used, but machinery installed in a building owned by the borrower can be included in the mortgage on immovable property. The owner's equity, which must be 35% to 40% of the total financing required, is usually concentrated in the building to provide the kind of mortgage security that the bank requires. The remaining 10% to 15% of the total financing required is usually furnished by a commercial bank or other lender.

The standard rates of interest are a 1% commitment fee for the unutilized portion of the credit and 7% on the loan. Until September 1953, the going rate was 6%. Since many of the loans are to new enterprises, the loan agreement usually provides that no repayments on the loan are required for the

[2]The calculation often regards depreciation as available for loan repayment; this may account for the higher range of return allowed the owner.

period during which the plant is being constructed, machinery installed, and the plant is being broken in (usually less than 18 months). After this foundation phase is completed, the loan becomes repayable in two semi-annual instalments per year.

In addition to granting loans, the bank also participates in new enterprises. The first participation was in a fish canning plant on Marmora Island. The bank now owns shares in four enterprises, although it does not interfere in the management of them, according to the general manager of the bank. As the market for shares in these enterprises develops, presumably upon the establishment of an earnings record, the bank will sell off the shares it holds.

Banking activities are not limited to loans and participations. The bank also issues letters of credit and guaranties, discounts bills, and performs other operations in connection with the import or export of merchandise. It does this primarily for its own customers. In connection with these commercial banking operations it has available to it the rediscount facilities of the Central State Bank.

The bank has suffered no loss on any loan. In one case, the borrower's business was liquidated, but the security on this loan was a guaranty and the guarantor made good.

This satisfactory experience, however, does not mean that the bank does not have problems. It has had collection delays on about 4% of its loans. In almost one quarter of the loans, the customer has underestimated the length of time that it would take to get the business organized and capable of making repayments. One of the greatest difficulties has been lack of reliable information on which to base judgments. Applicants are usually reluctant to furnish the detailed information required by the bank, and in many cases they simply do not have it. They also resent the credit checks as being unwarranted prying into their personal affairs. A further difficulty arises from the fact that the credits are granted in lira, but to a considerable extent require the import of machinery to be paid for with foreign exchange. The bank has developed a program for protecting its customers in such transactions by use of the forward exchange market.

The scope of the bank's financing operations can best be indicated by a few cumulative figures.

	Number	Value
Loan applications received (to end of 1953)	1335	TL 455,361,942

The largest number of applications, 276, were received from repair shops; the second largest number, 249, from food and food products industries; the third largest number, 227, from the textile industry; and the fourth largest number, 181, from the chemical industry. In value, more than a third was accounted for by the textile industry, followed by food and food products, and stone clay and glass (which includes cement).

	Number	Value
Applications cancelled (to end of 1953)	524	TL 155,925,124

Reasons for cancellation were ineligibility because of the purposes of the bank or of the Marshall Plan private enterprise fund priority list, or insufficient information.

	Number	Value
Applications rejected (to end of 1953)	279	TL 72,520,491
Loans granted or approved (to end of 1953)[3]		

The composition of the bank's loans by industry is indicated by the following table, which shows the number and volume of loans in six largest categories that had been granted to the end of 1953:

	Number	Value (TL)
1. Repair and Maintenance Shops	55	1,393,823
2. Food and Food products	43	17,855,534
3. Textiles	40	42,104,931
4. Stone, earthenware, glass, ceramics	21	21,650,091
5. Chemicals	16	4,860,850
6. Timber and wood products	6	4,166,733

Some officials of the bank feel that the textile and cement businesses, which account for a large part of the total volume of loans, are becoming poor risks.

The great bulk of the loans were small. At the end of 1953, more than 34% of the loans were under TL 50,000, and more than 33% were in the category TL 100,000 to TL 500,000.

The amount financed by the bank is multiplied by the amount of private investment that is encouraged. For example, for the period from the bank's formation to the end of 1953 while the bank's loans to industry totaled a little over TL 100 million, the borrowers' own financing amounted to more than TL 89 million, and the working capital used by these borrowers but acquired from other sources totaled nearly TL 52 million. Thus, loans of TL 100,625,000 by the bank resulted in a total investment of TL 241,849,000. From information received from an officer of the bank, these figures had been increased by the end of 1954 to aggregate loans of about TL 130 million, with a total investment including such loans of TL 250 million. The total of projects financed to the end of 1954 was about 292, of which 60 were small repair shops.

Inasmuch as the bank does not have branches and is located in Istanbul, the question may logically be raised as to how it got its business. A good deal

[3]There is a discrepancy in the figures which is not explained in the bank's statement. There were 1,335 applications, of which 524 were cancelled and 279 rejected, leaving a total of 532 which were either granted, withdrawn, or otherwise disposed of. It is assumed that loans in process, voluntary withdrawals, and revisions of loan agreements account for this discrepancy.

of it comes by referral from the commercial banks which are both owners of the Industrial Development Bank and have an extensive branch organization of their own. Much of the business, of course, originates in the Istanbul area. The bank does not hesitate to send out specialists for on-the-spot visits with the applicants. It has a regular policy of following up at least once a year on loans already made; and investigations of new applicants are often made in connection with this follow-up work.

The steps involved in the processing of a loan start with a detailed application form calling for such information as whether there are imports of the commodity in question and where they are coming from, the extent of domestic competition, the size of the market, and estimated cost and sales prices. The purpose of this application is to make sure that the applicant has thought through his own problem. If it is a new venture, a cost breakdown and a pro forma operating statement are required, together with evidence of how the applicant expects to repay the loan and in what period of time. For an established enterprise, a balance sheet and profit and loss statement for the last three years are required.

When an application has been received it is given a preliminary screening from an investigations group who look for obvious flaws, such as a criminal record of the applicant, and whether on the face of the application it appears that the request should be seriously considered.

At the next stage, the application goes to the so-called eliminating committee, which consists of one representative of each of the major departments - financial, technical, and economic. This committee determines whether the applicant's business is eligible: for example, whether it is industry or only trade; whether the loan is for the longer-term financing done by the bank, or whether it is for meeting working capital needs only; whether the idea is reasonable, or whether it is an impractical proposal from an engineering, marketing, or financial point of view. It is at this stage that most of the cancellations occur. Of the 1,335 cancellations listed above, 524 were cancelled at this stage. If it is decided to process the application further, the applicant may be asked for additional information.

The next stage for the surviving applications consists of a study by the three special departments. The economic group goes into such matters as the volume of imports and the foreign exchange that would be saved as well as required by the project. It also checks costs, prices, wage rates, the market for the product, and similar economic information. The technical department reviews the plant layout, the machinery, operating rates, and cost estimates. Finally, the financial department checks the financial statements or estimates. Both the technical and financial departments make a kind of management check. The investigating group also makes a credit check, a procedure that is difficult since there is no central credit bureau or Turkish Dun & Bradstreet which provides credit ratings. Many applicants feel that it is perfectly all right for them to borrow from as many banks as possible without disclosing their indebtedness.

After reports have been prepared by the three departments, and the investigating group's report is also in hand, the whole file goes to the credit

committee. The credit committee consists of the heads of each of the three special departments, the head of the commercial banking department, and the assistant general manager, Bulent Yazici. The assistant general manager is chairman of the group. The economics department has three representatives on this committee, and has three votes. Upon reviewing the evidence, this committee either recommends that the loan be refused and makes a very brief report as to why it should be refused, or it recommends that the loan be made and in so doing recommends the amount and the terms and conditions, including any special conditions that should be attached to the loan. All recommendations whether for refusal or for granting of the loan go to the board of directors for final action. Inasmuch as not all loans are recommended unanimously, any member of the committee who dissents expresses his view in writing and no pressure is brought upon the nonconformist to join with the majority. Similarly, in no case so far has the board of directors, regardless of its own action, ever requested the credit committee to revise a report on a loan that it has recommended or refused, even though the board in a number of cases has overridden the credit committee. The assistant general manager represents the credit committee at the meetings of the board of directors and presents the loans for the board's consideration.

The credit committee also has two special functions other than processing loan applications. With the mechanization of Turkish agriculture and transportation, and with the growth of industry in the country, it became obvious that there was great need for conveniently located and properly equipped repair shops. Since most of these shops were small, it was impractical to give requests for loans from such shops the same treatment as would be given larger projects. There is, therefore, a special program for repair shops. Loans to repair shops up to TL 50,000 may be finally approved or disapproved by the credit committee without reference to the board of directors.

The procedure followed in the repair shop program is to send an engineer and sometimes an analyst for an on-the-spot investigation of the shop. The field investigation determines the adequacy of the shop's equipment, the market that it serves, the ability of the proprietor, and determines the equipment that might be needed. For the most part, the formal application with its detailed financial information is dispensed with in these cases. Repair shop loans are not limited to 50% of the value of the property, and they are not secured by mortgages. As a matter of fact, they are virtually unsecured loans except for a claim on machinery which does not have the force and effect of a chattel mortgage.

Another function that is being undertaken by the bank is investigation of investment opportunities for large investors seeking to put their money into industry. The bank apparently takes on these jobs on a more or less ad hoc basis and uses its investigating machinery to turn up opportunities in which the bank may participate with the large private investor. This function is becoming increasingly important as the capital market develops.

Once a loan is made, the proceeds are disbursed only as outlays are required by purchase or installation of machinery. The bank prefers to make these disbursements directly to the supplier or the contractor and not through

the borrower.

After the loan or such amount of it as may be required has been disbursed, the bank has a program for following the loans depending upon the type and size. For the small repair shops, a field investigator visits the shop at least once a year to make sure that the machinery financed is still in place and is being used, and generally to appraise the operation of the shop. No financial statements are required from repair shops, largely because they could not be furnished anyway. For other smaller loans, the bank requires an annual statement and determines by a field investigation that the loan proceeds are being used as projected by the applicant. The field investigation also appraises the management and its use of equipment, and the bank has not hesitated to bring pressure upon management to make corrections when they are needed. For the large loans or loans to large businesses, the follow-up consists of obtaining semi-annual reports, or in the case of loans using International Bank funds, quarterly reports.

The operating results of the bank demonstrate that it is not only meeting a need, but that industrial lending in Turkey is a profitable business. The bank was hardly organized before the end of 1950, and was building up its volume in 1951, the first full year of operations. For 1951, as has been pointed out, the 6% dividend was borrowed from the Ministry of Finance. For 1952, net profits after taxes were TL 681,767, and the first dividend of 6% amounting to TL 375,000 was paid. For 1953, the bank had profits of TL 980,549 after taxes, and again paid a first dividend of 6% amounting to TL 750,000 (the paid-up capital having been increased from that of the previous year-end). The loan from the Ministry of Finance for the 1951 dividend of about TL 375,000 had been reduced to 198,000 by the end of 1953.

The potential profits of the bank appear to be excellent, and the return to the stockholders is not limited to 6%. The charter provided that after deduction of 10% of profits for reserves and contingencies, a first dividend of 6% would be paid. If profits allow, the remainder, after providing for the items above, shall be distributed 5% to founders' shares (100 of them), 2½% to the board of directors, and 5% to employees (if the directors so vote). From any remainder after these distributions, a second dividend not to exceed 6% may be paid.

From this study of the Industrial Development Bank of Turkey, there are some conclusions that are of special interest to the industrialization program of Iraq. Iraq, like Turkey, has a very large gap in its financial system. The supply of savings is small, and investors generally prefer agricultural land and real estate to other forms of investment, because these are the types with which they are familiar; and also for other reasons, including preferred tax treatment. The commercial banking system in Iraq, as in Turkey, limits itself to very short-term advances so that it is not equipped by tradition, practice, or desire to finance the needs of industry for equipment or plant. Neither Turkey nor Iraq has the usual alternative sources of intermediate and long-term credits, such as insurance companies or a securities market. Both countries have set up government institutions to fill this gap.

There is an Industrial Bank (Sumer Bank) in Turkey just as there is one in Iraq. The Industrial Bank in Turkey (not to be confused with the Industrial Development Bank) is concerned primarily with the financing and management of state enterprises. In Iraq, the Industrial Bank spreads itself over both the government financed and the privately financed field.

Private industrial development probably cannot be fostered as effectively through a state-owned bank as it can through privately owned and managed institutions. State banks are owned by the government, which, of course, is always interested to know what their funds are used for. State banks are subject to pressures from government in making their loans. State banks, being a part of the government, become involved in the administrative red tape and salary classification system of the government; they are not likely to be able to attract or to hold the kind of people required to give the most effective management to banking institutions. State banks do not command the full respect of banking and business interests either at home or abroad, and for this reason much of the business which they might well do is not referred to them. State banks are likely to be the target for unsound ventures that would never be seriously proposed to private banks. Much time and effort of the administration of state banks, if such administration is conscientious and competent, will be devoted to disposing of unsound ventures that may have strong political support. State banks, being a part of the government, are probably less concerned to get out of the financing business than private banks that, if the need for their services in one direction is satisfied, can easily move into other lines that may also be profitable. For example, a state bank is much less likely to be interested in developing a capital market than a private bank; and is similarly likely to be less effective in developing a capital market because private investors generally have less confidence in enterprises originating with state funds than in enterprises having a heavy private investment to begin with. Finally, state banks are not likely to attract leaders of the financial and business community to be members of their boards. Private interests are likely to be in the minority on the boards of state banks, whereas they are in the majority or constitute the whole of the boards of private banks.

The disadvantages of state banks and the advantages of privately financed banking institutions were realized in Turkey and led to the establishment of the Industrial Development Bank as a privately owned and managed institution. The advantages of a privately owned Industrial Development Bank were apparent to the government of Turkey and to the Economic Cooperation Administration, which used the Industrial Development Bank for administering the counterpart funds allocated to industrial development. These advantages were, of course, also obvious to the International Bank for Reconstruction and Development, which has made substantial funds available to the Industrial Development Bank. Iraq would be well advised to give every encouragement possible to the establishment of a similar institution along the lines set forth in the foregoing section. The contribution that such a bank could make to the economy of Iraq would be incalculable. Means for securing such a contribution to Iraq's industrial development are already at hand. All that is lacking is the knowledge and the will to put private financial management to work in this field.

CHAPTER VI

PROMOTION OF INDUSTRIAL DEVELOPMENT

CHAPTER VI TABLE OF CONTENTS

PROMOTION OF INDUSTRIAL DEVELOPMENT

	Page
I. MARKET DEVELOPMENT	349
A. Introduction	349
B. The Proposed Market-Development Program	350
1. Demand Identification	350
2. Quality Improvement	351
3. Development of Distribution Services	351
4. The Promotional Campaign	352
II. FUEL AND POWER	353
A. Introduction	353
B. The J. G. White Company Proposals	353
C. Use of Natural Gas as a Fuel for Power Generation	354
D. Price Policy	356
III. TRANSPORT	357
A. Demountable Bodies	357
B. International Communications	358
IV. LABOR AND LABOR TRAINING	359
A. Availability and Need of Skilled Labor	359
1. Availability	359
2. Need	360
B. Methods of Training	360
1. On-the-job-Training	360
2. Vocational Training Schools	361
3. Company and Agency Training Schools	361
4. Cooperative Education	362
5. Apprenticeship System	362
V. MANAGEMENT OF INDUSTRIAL PLANTS	363
A. Introduction	363
B. Projects over which the Government Wishes to Retain Control	363
C. Projects Suitable for Private Management	363
D. Management Agency Contracts	364
VI. CAPITAL AND INVESTMENT CLIMATE	368
A. Private and Corporate Savings in Iraq	368
B. Improvement in the Investment Climate	370
C. Improvement in Investment and Financial Mechanisms	371
D. Working Capital for Industrial Plants	372

I. MARKET DEVELOPMENT

A. INTRODUCTION

One of the most serious obstacles to industrial development in Iraq has been the very limited domestic market for manufactured goods. Probably the most important aspect of new industry evaluation in Iraq is the study of the markets that will exist for the products of a new industry. In most cases, the technology of production is readily available from foreign countries, but unless there are adequate present or potential markets, there can be no economic justification for the establishment of a new industry.

The lack of adequate domestic markets has prevented, in many cases, the establishment of modern, low-cost methods usually associated with production on a relatively large scale. This in turn has weakened the incentive to invest in industrial projects, incentive that has been further weakened by a shortage of capital and by the existence of profitable uses for capital in trade and real estate. Although the Development Board can itself overcome one aspect of this difficulty by providing the necessary investment funds, it cannot overcome the fundamental difficulty that modern industrial production cannot be successfully based on very small markets.

Steps can be taken, however, to reduce this difficulty. Many other countries with a similar problem have solved it by producing on a large scale for export markets; thereby, at the same time, they supply their limited domestic markets with cheap products. The foreign exchange earnings also realized are used to import the goods that cannot be made at home. Iraq's resources are particularly suitable for export, and petroleum is already a very important source of wealth. Proposals are contained in this report to enable Iraq to obtain further wealth from the production of products associated with petroleum. The export of manufactured goods to nearby countries is also recommended.

Fortunately, the demand for some industrial products is already adequate to justify domestic production by modern methods, and the continuous increase in income will soon bring other products into this group. Proposals for the manufacture of goods and materials for the domestic market are made in this report, but manufacturing success, particularly in the case of consumer goods, will depend to a very large extent on the willingness of the Iraqi consumer to purchase them. Experience indicates that very distinct preferences are shown for imported products by all classes of the population. The reason for this comes in part from the poor quality of many locally made goods and in part from the social distinction that the possession of foreign-made goods seems to confer. It would be possible to overcome these difficulties by imposing tariff or quota restrictions on the import of goods that compete with domestically made products, but the result would probably be the sale of low quality domestic goods at very high prices. The importation of foreign goods can perform the valuable service of inducing local manufacturers to provide high quality goods at competitive prices and therefore should be prevented

only in very special circumstances.

Development Board action in this matter is necessary. Every effort should be made to improve the quality of domestically made goods. It is felt that certain measures are required to encourage and enable the consumers to purchase such goods. A four point market development program that will help to guide Iraq's industrialization and ensure its success is recommended. The recommended program, which should extend over several years and require the special services of expert practitioners in many fields, draws on extensive experience in the field of market development, and in particular the programs that have been successful in Puerto Rico and the State of West Virginia.

B. THE PROPOSED MARKET-DEVELOPMENT PROGRAM

A market development program for an industrially awakening country like Iraq must be many sided, flexible and continuous. The development of demand and of facilities to meet it should take account of the country's economic resources and the needs and tastes of its people. A complex of related but diverse forces must be developed more or less simultaneously so that buying power and the supply of products and market facilities remain within reasonable balance. The central purpose of the program would be to educate demand and improve marketing channels.

A four point market development program is proposed:

1. Identification of products that are suitable for the general needs and desires of the community. In some cases guidance can be obtained from the habits of the more advanced segments of the economy and in other cases from nearby countries, but it is most important that demand creation should always be related to the needs and the economic conditions of the country.
2. Improvements of the quality of the local products so that demand creation is firmly based.
3. Development of distribution services, including both the physical handling, transportation, and warehousing of the goods, and the establishment of sound practices of retail distribution. Costs and markups should be commensurate with the various services rendered.
4. Development of a many sided promotional campaign to stimulate the Iraqi consumer to purchase the products of the country's industry.

1. Demand Identification

The identification of products towards which demand promotion efforts should be directed is a very important part of the total program. The whole program would be endangered by promotional activity directed towards goods in which the public is neither interested nor likely to become interested, or which cannot be made in Iraq of good quality and at appropriate cost.

Products chosen should satisfy the desire and needs of the Iraqi people and at the same time support the country's growing industry. The Ministries of Health and Social Affairs will be able to offer guidance on the identification of products for which there is a welfare need in Iraq. Many products suitable for manufacture in Iraq are identified in this report, and

further advice can be obtained from the Ministry of Economics, the Industrial Bank, and other agencies at a later date. The problem of anticipating the direction in which demand may be most easily led is more difficult. Consumption habits in other Arab countries where the per capita level of income is somewhat higher, particularly in Egypt and the Lebanon, would indicate the direction of future trends more satisfactorily than European or American consumption patterns. On the other hand, the film, radio, and press are introducing all parts of the world to alien consumption habits at a rapidly increasing rate. Better guidance perhaps can be obtained from comparisons between consumption habits in the large towns and the villages in Iraq itself.

2. Quality Improvement

Recommendations to establish a Bureau of Standards and to provide technical assistance to Iraq's industry have been made elsewhere in this report. The possibility of eventually establishing a seal of approval for satisfactorily manufactured and tested products should be carefully considered. The whole market development program will be seriously endangered unless the products promoted give satisfaction. A "Buy Iraqi" slogan would soon cease to be effective if locally made products were consistently of lower quality than imported ones. A program that would justifiably raise the pride of the Iraq people in their country's products would have much better long-run success than a policy of import restrictions.

3. Development of Distribution Services

When goods have been identified and satisfactorily produced, they should be moved from the manufacturer to the consumer cheaply and efficiently. Proposals to improve transport and cold storage, and to provide financial assistance, have been made elsewhere in this report but further measures will be necessary. In most economically underdeveloped countries, the established patterns of trade hinder the effective movement of goods and are responsible for costly inefficiencies in the shape of market uncertainties, undue profit margins, price haggling, small-scale operations and a lack of modern facilities. The whole system of distribution, beginning with manufacturers and importers and working through wholesalers to individual retailers, should be thoroughly examined in order to find starting points for further improvement and modernization. The possibility of achieving very satisfactory results in the fields of wholesale and retail marketing is currently being demonstrated in Puerto Rico, where, within a very few years a system of small stores, credit, family patronage and careless storekeeping is giving way before the directed competition of modern stores, including super markets, and a rationalization of wholesale activities. The key to the successful initiation of this development is in the setting up of demonstration stores and in the introduction of one or two outside super-market operators. These people are demonstrating the economy and attractiveness of modern store operating methods and are causing local merchants to re-examine and reorganize their own activities. It would probably be useful to find one or two store merchants who would cooperate in a program of experimentation to modernize their own operations. These tests would demonstrate

both the attractiveness to consumers and the better profits to be had from efficient merchandising procedures. It is unlikely that developed merchandising ideas from other countries could be satisfactorily introduced into the Iraq economy. Such ideas could, however, stimulate manufacturers, wholesalers, and retailers to experiment with new ideas.

4. The Promotional Campaign

Efforts must be made to demonstrate to the consumer that goods manufactured in Iraq can be, and are, as good as imports. Successful promotion of some locally produced goods has already been achieved in Iraq and experience in these cases indicates that impressive results can be obtained by attracting the attention of wholesalers to new products; but promotion must be increased as more new industries are established.

When products have been identified, they should be brought to the attention of the consuming public and the various marketing agencies involved. Advertising through the press, radio, cinema and other media should be encouraged, and goods should be demonstrated in use wherever possible. A Central Promotional Agency to advise Iraq Government officials, merchants, and manufacturers on promotion techniques should be established. This agency might itself undertake certain campaigns and should continuously encourage and assist manufacturers and merchants by supplying them with a flow of new ideas. It would probably be necessary for the Agency to employ the services of a consulting organization with experience in the fields of advertising and market promotion to assist it in its work.

It is recommended that the Development Board, in cooperation with the Chamber of Commerce and leading manufacturers, should undertake a market development program along the lines outlined above. A comprehensive program would probably involve the expenditure of between ID 100,000 and ID 150,000 to which sum manufacturers and others who would benefit from the program's success should be invited to contribute.

II. FUEL AND POWER

A. INTRODUCTION

Iraq has ample resources for the generation of low cost electric power. Natural gas can be used to generate electricity in Baghdad, Dibis, and Basra at very low costs; at a later date it may also be economically attractive to supplement thermally generated electricity with hydro generation at the site of the projected new dams.

Successful industrial development depends in very large measure on the availability of plentiful supplies of cheap and readily available electric power. Although Iraq's power resources greatly exceed her current and foreseeable needs, they are very seriously under-developed and are inadequate for meeting industrial demands. Industry has therefore been led to generate its own electric power. In the case of large enterprises with substantial investment funds, the absence of cheap power supplies is not always very important, but when small- and intermediate-sized projects are being planned it may be of vital importance. In those cases, capital is usually limited, and the additional financial strain of building captive generating capacity may prevent new enterprises from coming into existence. These smaller units are of the greatest importance to industrial development; they supply consumer goods and consume the products of the larger establishments.

Captive power plants have not been recommended in this report because they are generally expensive, wasteful, and do not permit high load factors except in continuous operation industries. They are utilized in the daytime when municipal generators may be idle and are themselves idle at night when the domestic and town lighting demands are highest. Industrial development in Iraq can be greatly assisted by the provision of plentiful supplies of low cost electricity. The Board is urged to carry forward its power generation plans as quickly as possible and to take immediate steps to increase capacity in Basra where a large part of Iraq's future chemical industry will be located. It is estimated that about 25,000 KW of generating capacity will be required to carry out the proposals contained in this report and that as much as 12,000 to 14,000 KW may be required in the Basra region.

B. The J. G. White Company Proposals

Estimates of Iraq's power requirements during the twenty-year period ending in 1973, and proposals to meet them, have been made by the J. G. White Company. The estimates were based on a rate of growth of 11% per annum during the first 15 years and 8% thereafter, excluding the requirements of the Board's Industrial projects and the needs of irrigation and drainage pumping, which were estimated separately. The White Company recommended that the power requirements be reviewed at intervals of at least every three years, and it is understood that this recommendation has already been put in effect by the Board.

The need for such reviews becomes evident when it is realized that

total electricity consumption in the Baghdad area alone has been growing since 1952 at a rate exceeding 20% per annum. The generating capacity required over the next six to seven years to carry out the proposals in this report amount to one third of the total generating capacity estimated by the White Company to be required for the Board industrial projects by 1973.

Proposals to generate electricity from crude oil at Baghdad and from natural gas at Basra and Dibis are also made by the White Company. Although hydro-electric power would be more costly than thermal power at the present time, a very conservative approach seems to have been taken. For example, in the case of a Sammarah hydro-electrical installation, only the firm power (available throughout the year) was used in the calculations, and no consideration seems to have been given to the secondary power that would be available over a reasonably long part of the year. The use of a certain amount of secondary power and the interconnection with thermal plants at Baghdad might achieve considerable reduction in cost. On the other hand, thermal power generated in Baghdad from crude oil would be substantially more costly than is estimated if an economically realistic price for fuel were charged. It is not, however, recommended that a hydro-electric installation be installed at Sammarah at this time; natural gas piped from Kirkuk to Baghdad would be still more attractive, but further con-sideration should be given at a later date to the possibility of using hydro-electric power as the second-stage power supply for the northern and central zones.

C. USE OF NATURAL GAS AS A FUEL FOR POWER GENERATION

Iraq's cheapest fuel for power generation in Dibis, Baghdad, and Basra is natural gas and it is economically wasteful to burn other fuels that have alternative uses. The White Company states in its report that it was instructed by the Development Board to make calculations on the basis of the price of 455 fils per metric ton for crude oil delivered in Baghdad and the use of this uneconomic price to some extent obscures this important fact.

Natural gas was evaluated on the basis of a cost (to cover collection only) of 6 fils per MCF and is shown, in spite of the low price for crude oil, to be the cheapest fuel for power generation at Dibis and Basra. It was recommended that the power plants at these locations should be equipped to burn natural gas and to use crude oil for pilot burners for safety reasons.

The White report estimates annual power requirements of natural gas at Dibis and Basra as follows:

MCF PER YEAR

	DIBIS	BASRA
1958	1,327,000	1,105,000
1963	1,784,000	4,328,000
1968	2,520,000	5,699,000
1973	3,140,000	7,375,000

The amount of natural gas estimated to be available annually is 29.2 million MCF at Kirkuk and 7.3 million MCF at Basra. Thus, the use of Kirkuk gas for power generation at Dibis would require only a small portion of the amount available, while the use of Zubair gas for power generation at Basra would account by 1973 for the total amount considered to be available.

The costs of power generation and the availability of natural gas may well change in the future. The use of natural gas as a fuel for power generation is economically attractive, and other future uses, particularly for Zubair gas, must be coordinated with future uses for power. Unless additional supplies of gas are made available in the Zubair area, it will be necessary whenever possible to burn the off-gases from petrochemical operations in power plants. Failure to coordinate the use of gas in its various applications might result in the need to burn a more expensive fuel, such as Bunker ''C'' oil.

The White report also evaluated the possibility of piping natural gas from the Kirkuk fields to Baghdad to serve as a fuel for power generation at the two power stations proposed for the area. The evaluation indicated that the cost of natural gas delivered in Baghdad would be 16.7 to 22.2 fils per thousand cubic feet, depending on whether depreciation reserve charges were included. Since this price was higher than the 16.2 fils per thousand cubic feet considered to be the price equivalent to the crude oil price of 455 fils per metric ton, the use of natural gas was not recommended. As the crude oil can be refined at considerable profit or conserved for future export, with an ultimate gain of ID 2 per ton to the Iraq Government, its economic value is greatly in excess of 455 fils and its use for power generation cannot be justified. Re-evaluation on the basis of an economically realistic price for crude oil shows natural gas to be very substantially the cheapest fuel for power generation.

The specifications recently prepared for the Baghdad power stations call for equipment to operate on Bunker ''C'' oil. Based on equivalent heat values and prices, this procedure is more expensive than natural gas unless there are no alternative uses for it in Iraq or abroad. It should be possible to develop domestic markets for Bunker ''C''; and, as residual oil prices are rising throughout the world, it should also be possible to develop export markets. It is understood, however, that the export of Bunker ''C'' would require an alteration in the present agreement with the oil companies. This situation should be thoroughly reviewed and every effort made to find suitable outlets for Bunker ''C'' oil, so that Iraq's petroleum resources can be used in the most effective manner.

Work on the power stations should proceed as planned, for the power they will generate is urgently needed. However, as new domestic and foreign markets are developed for Bunker ''C'' oil, steps should be taken to transport natural gas from Kirkuk to Baghdad for power generation at a capital investment of the order of ID 3 million. This recommendation presupposes the oil countries' confirmation that large amounts of natural gas will continue to be available at or near the costs that have been used for evaluation purposes. Decision as to whether the gas transported to Baghdad should also be used for a public gas supply system would not have to be made at the time the line is constructed,

but the pipeline system should be so designed as to allow for this additional gas use at a later date.

Future developments in the field of gas operated turbines may improve the position of natural gas still further by making possible its use in gas turbines. At the present time, however, development work is incomplete and operating experience insufficient to justify serious consideration, particularly for gas with a high sulfur content.

D. PRICE POLICY

The price at which power is made available for industry is very important and can exercise the greatest influence on industrial growth. As the World Bank has pointed out, Government policy in this matter has discouraged industrial advance; apart from Baghdad and Basra, electric current for industrial use has been very expensive. Even in Baghdad the price has been so high that profits after depreciation, but before taxes, have exceeded 50% of the gross receipts of the Power Company. The Government's share in these profits has been, in effect, a tax on electricity consumption, a tax that may be justified in the case of private consumers but is clearly detrimental to the growth of industry.

Other countries have successfully encouraged industry by making supplies of cheap electricity available in both the towns and the countryside. It is recommended that the Development Board should give its support to a policy of cheap electricity for industry and ensure that the price to regular industrial users should not exceed 2 fils per unit. Together with the availability of capital at low rates of interest and improvements in transport, this measure would do much to stimulate economic development and raise the level of national income. It might be necessary to delay the introduction of this policy or introduce it by stages until additional generating capacity becomes available, but the principle should be accepted as soon as possible. Initially, Development Board's financial assistance might be necessary but the plentiful supply of cheap fuel, particularly in the form of natural gas, makes the price of 2 fils KWH economically realistic in Iraq. As 2 fils per KWH is considered to be a conservative estimate of the long-run cost of both thermal and hydro electric generation (including capital charges), it has been used to calculate operating costs in the industries evaluated in this report.

Two fils per KWH is an estimate of the maximum long-run economic cost of power in Baghdad and Basra; if higher prices are charged, the estimates made elsewhere in this report would not in any way be invalidated. The use of a higher figure would merely hide Iraq's economic advantage in her plentiful supplies of low cost fuel and her hydro generation potential. Reduced profits made by the industrial enterprises would be compensated by the increased profits of the power generating authority.

III. TRANSPORT

The importance of improved transport to successful economic and industrial development in Iraq is well understood by the Board, and substantial allocations for transport extensions and improvement have already been made. Advice with which Arthur D. Little is in agreement has recently been offered by Lord Salter. Therefore, it does not seem necessary to give extended treatment to this basic resource. The following comments are made to underline Lord Salter's proposals and to offer certain additional suggestions.

The proposals made in this report for the establishment of new industries will not themselves require immediate large-scale transport extensions. The Basra-Baghdad railway line is not, however, adequate to handle present needs, and the building of a second line of standard gauge would be desirable even without industrialization. Decisions to extract sulfur from the Kirkuk natural gas and to establish a fertilizer plant at Kirkuk would probably raise serious transport problems; but pending the extension of rail facilities, it might be possible to employ road transport for shipment to Basra although this would be very costly. Long distance North-South and South-North traffic should, whenever possible, be handled by rail. Road transport should be used to supplement the rail system. This would involve the construction of many small feeder roads giving access to the present and projected road and rail systems.

The importance of an extensive program of minor road construction has been explained by Lord Salter. He has pointed out its importance both to facilitate the collection of agricultural products and to distribute manufactured goods to the rural population. This would be of great value to industrial development by providing raw materials and markets and to the agricultural regions themselves by raising income levels and providing a supply of manufactured goods. The Sharasoora Valley near Sulaimaniya provides a very good example of regional under-development. In spite of its excellent climatic and soil conditions, it remains comparatively under-developed because of the high cost of transport to Kirkuk. Considerable agricultural extension, including the growing of sugar beets, is likely to follow improvements in transport in this region.

A. DEMOUNTABLE BODIES

The development of rail transport to provide feeder lines has the disadvantage of increasing the amount of handling and trans-shipment. Standard and meter gauge systems further aggravate this problem. To reduce costs and delays, it is recommended that serious consideration be given to the possibility of using demountable bodies and containers that could be transferred from one vehicle to another. Containers of this kind have proved very successful in other countries and they are now available in many types: open, covered, refrigerated, etc. Their main limitation is that they require cranes to effect the transfer from vehicle to vehicle, but this is not likely to be very serious in Iraq; the bulk of the traffic is between larger cities and the inability to load

and off load containers at the small stations would not be a very serious disadvantage.

Climatic conditions in Iraq are such that considerable waste of agricultural products takes place in transport during the summer months. This difficulty could be greatly reduced by the increased use of insulated and refrigerated bodies and trucks, and the Board should encourage their use.

B. INTERNATIONAL COMMUNICATIONS

Iraq is linked with other countries by road, rail, air, and sea but at present the greater part of the country's commerce passes through the Port of Basra. This is by no means an unsatisfactory situation for trade with Eastern countries, but it involves long and costly journeys by way of the Suez Canal to many of Iraq's markets and from her principal supplies of manufactured goods. Air transport is well developed, but improvements in road and rail communications with neighboring countries would do much to stimulate the free exchange of goods. Manufactured goods made in Iraq might well find markets in other Middle Eastern countries if transport facilities were improved.

IV. LABOR AND LABOR TRAINING

The establishment of new industries and the expansion of existing ones will require far greater supplies of skilled labor than are currently available. Shortages of unskilled labor are not foreseen, but the task of training a sufficient number of workers in the skills necessary to operate and maintain modern industrial equipment will present perhaps the most serious difficulty in the path of industrial advance. Interviews with the managements of many of Iraq's industrial establishments have very clearly revealed the seriousness of the problem. Fortunately, the Iraqi worker can be trained with care and attention to a very satisfactory level of skill. Many companies have succeeded in doing this and building up an adequate labor force. The process is expensive and the cost is frequently increased by the competitive bidding for skilled workers the result of which is that trained men move from the plants in which they were trained to alternative and better paid employment. The purpose of this section of the report is to suggest the steps that are necessary to provide a continuous and increasing supply of skilled workers.

A. AVAILABILITY AND NEED OF SKILLED LABOR

It is very difficult to provide estimates of either the amount of skilled labor that is available and is being trained or the amount that will be required in the future. Much will depend on the rate at which training schools are established, the amount of on-the-job training that is carried out, and the rate of establishment of new industries. It is possible, however, to indicate the general magnitude of the problem.

1. Availability

At the present time there are three principal methods of training labor. Each method has its advantages and disadvantages, but all make a contribution to the supply of skilled labor. The three principal methods are: the Vocational Training Schools; the training schools and shops of such large organizations as the Iraq Petroleum Company, the Basra Port Authority and the Iraq State Railways; and the on-the-job training provided by numerous manufacturing enterprises.

The Vocational Training Schools that are operated by the government at Baghdad, Basra, and Kirkuk are graduating about 50 men each year trained in one of the fields of carpentry, foundry, metalworking, turning, fitting, automobile, and electrical repair. The training schools run by the Iraq Petroleum Company graduate a total of about 100 men each year trained as skilled artisans, clerical, or technical personnel. The Basra Port Authority and Iraq State Railway graduate about 20%-30%.

Data are not available on the number of skilled workers that result from the on-the-job training conducted by individual companies nor on the degree of skill to which the workers are trained. Undoubtedly, however, the number of

persons so trained appreciably exceeds the total number produced by the training schools and represents one of the most significant contributions to the supply of skilled labor. Thus, excluding on-the-job training, only about 200 skilled or technically trained men are being graduated annually.

2. Need

In addition to skilled labor needed by existing industries, the establishment of new industries would, of course, require even more. Once again it is not possible to provide more than estimates of the amount of skilled labor required, but it is estimated that requirements will amount to about 15% of the total labor needs of the program. Thus, approximately 5,000 additional skilled workers will be required during the next six or seven years.

Immediate steps must be taken if the industrialization program is to proceed rapidly. Action should not be delayed until plants have been built. Certain workers cannot be trained until the plant in which they will work has been constructed, but whenever possible, men should be selected and trained as foremen and skilled workers either in Iraq or abroad at a very early stage in the planning of industrial plants.

B. METHODS OF TRAINING

The measures taken to improve the supply of skilled labor in Iraq must be directed to both the immediate and long-term needs of industry. Of the three methods proposed, vocational training schemes are primarily of a long term value and as such should be given very careful attention by the Board. The immediate needs of the proposed program must, however, be met by training within industry itself.

1. On-The-Job Training

The most effective method for the training of skilled workers will be on-the-job training. With proper supervision, adequate planning, and the necessary expenditure of time and money, it should be possible to train a sufficient number of workers to a satisfactory level of skill. In many cases, the skilled workers required can be trained more satisfactorily by this method than by formal training; in the chemical and textile industries, for example, specialized training can best be learned under actual operating conditions. A certain amount of preliminary education, however, particularly in reading and writing, greatly simplifies the task of the instructors.

Despite the fact that much of the on-the-job training must wait until plants have been established, a great deal of preliminary work can and should be done immediately after the decision to establish a plant is reached. Attention should be given to the following matters:

1. Personnel who are to be employed as supervisors and foremen should be engaged during the early planning stages. Arrangements should be made where possible to send these men abroad for training in a similar plant. Arrangements can probably be made for such training with the help of the firm that is engaged to construct the plant.

2. The concern charged with construction and initial operation of a plant should be instructed as part of their contractual responsibilities to undertake the teaching of Iraqi supervisors, foremen, and labor, and to train them to as high a degree of efficiency as is necessary for satisfactory operation of the plant. Supervisors and foremen should be present during the construction of the plant so as to become thoroughly familiar with the plant equipment and layout.
3. Plans should be made early in the planning stage for a program of on-the-job training. The advice of Iraqi industrialists and foreign advisors should be sought to assist in the preparation. Allowance must be made for the cost and the delay involved, and full capacity operation of new industrial plants should not be expected for some months.

The program for on-the-job training must be the responsibility of management. This is one of the many important reasons why it is essential that the management should be selected very early in the planning stage. Without early planning for labor training, effective use of the newly established facilities cannot be made. The preparation of plans for intensive labor training should be made a condition for the granting of loans by the Industrial Bank.

2. VOCATIONAL TRAINING SCHOOLS

Iraq's Vocational Training Schools have been the subject of recent detailed study by experienced educators; and ''UNESCO'' Reports have presented the problems and made recommendations in detail. With time and the expenditure of the necessary funds, vocational schools can undoubtedly produce a growing number of well-trained and skilled workers, but for many years to come the number of graduates will remain small. The training period of five years implies that the effects of a large expansion, even assuming that an adequate number of well-trained teachers were available, would not be felt before 1961 or 1962, by which time considerable industrial development will have taken place.

Every effort should, however, be made to improve and strengthen the vocational schools so that they can provide an increasing supply of well trained men. These schools are primarily the responsibility of the Ministry of Education, but the Board is urged to encourage and assist this Ministry in its efforts. It should, for example, advise the Ministry of Education about the needs of the development program in the years ahead and the types of skills that will be required. It might also be desirable for the Board to make appropriations to be used for the establishment of improved facilities and for the purchase of materials for use in the vocational schools.

3. Company and Agency Training Schools

These schools serve to provide trained personnel principally for the company or agency operating them, and the number of their graduates will continue to be limited. Such schools will, however, play an important role in the training of skilled labor. Their experience can be used to give guidance to the Board and others on the most effective ways of establishing further training

schools and of improving the existing ones. It might be possible to arrange for certain vacancies to be filled by students on a cost basis, but in any case, the experience and knowledge of the company and agency schools should be used to assist the Board.

4. Cooperative Education

Another and more advanced method of labor training that has been recommended and has shown excellent results in the United States and in England (where it is called the ''sandwich'' system) is the cooperative method of training. Under this system, recommended for consideration in Iraq by Lord Salter, the trainee spends a specified period of time in school and is given instruction in technical subjects, and then an equivalent period of time in industry in the field for which he is being trained. The student continues to alternate between school and industry until his training is complete. This method is best suited to those employees who show aptitude for upgrading to foremen levels. The plan requires a high degree of cooperation between the school and industry; it is necessary to ensure the supervision of the students during their period in industry so that the lessons learned at school are well applied under actual working conditions.

This method of instruction can be very effective for the training of men for trades requiring the use of expensive materials and equipment. A very small investment is required to provide the class room facilities required for instruction, and classes can be kept relatively small. The building trades are particularly suitable for this type of training. Classroom instruction can cover such subjects as blueprint reading, site planning, location of facilities, interpretation of local laws and building codes, inter-relations between trades, materials estimation and costs. In the field, students can get direct experience in the particular trade for which they are best suited.

5. Apprenticeship System

For the rarer cases in which skilled craftsmen are required, Lord Salter has indicated that a system of apprenticeship training would be desirable, with perhaps a contribution by the Ministry of Education during training. For the immediate purposes of the development program, this system would contribute comparatively little of the skilled labor that will be required, but it seems to offer important long-term advantages and should be given serious consideration.

V. MANAGEMENT OF INDUSTRIAL PLANTS

A. INTRODUCTION

This section of the report discusses the machinery and procedures necessary for the establishment and operation of the industrial projects approved by the Development Board. The appropriate form of organization and procedure will depend primarily upon whether the Board wishes to keep the project under the control of the Government or whether it will eventually be sold to private persons. In either case the selection of the Management should take place before the freezing of designs or the letting of contracts for construction. A company or public board given a plant that has already been built will be tempted to absolve itself from the major responsibility of making a success of the operation. A claim could be made that the plant was of an inappropriate size or that the design was unsuitable for the products it had to make, and that the possibility of achieving profitable operating results had been precluded by incompetent planning for which the new Management was not responsible.

B. PROJECTS OVER WHICH THE GOVERNMENT WISHES TO RETAIN CONTROL

If the project is to be developed and to remain under the direction of the Government, public bodies such as the Iraq State Railways and the Government Oil Refineries Administration should be established. In cases of this kind, the Management body may appoint its own managing personnel and assume direct responsibility for the detailed operation of the venture. As an alternative, it may, as in the case of the newly constituted Baghdad Electricity Services, obtain professional management in the form of a Management Agency Agreement. Guidance on the points that should be covered in a Management Agency Contract, which can also be adopted for the management of private industrial plants, is offered later in this section.

C. PROJECTS SUITABLE FOR PRIVATE MANAGEMENT

In the section of this report dealing with the administration and finance of the industrialization program, it is pointed out that few industrial projects are suitable for Government-controlled management and operation. Proposals have been made to transfer the Industrial Bank to the control of the Ministry of Development, and to increase its administrative and financial strength so that it can be used as the Development Board's agency in the establishment of new industrial ventures by setting up companies to plan, construct and manage them. A further proposal is made to establish an Industrial Development Finance Corporation to take over an important part of this work.

One of the important advantages of this procedure is that it will attract private capital and management into the framework of the Development Board's industrial planning. This can be done most satisfactorily by assuring sufficient loan capital to make equity investment attractive to private investors. It is suggested that loan capital made available to an individual

enterprise should, if necessary, be commensurate with the equity capital supplied by private sources.

The Industrial Bank should also provide equity capital in appropriate cases; where this exceeds half the total equity, the Board and the Bank would naturally be unwilling to permit the control of the enterprise to pass into private hands. However, no change in procedure need be adopted. The Board and/or the Industrial Bank can nominate their officials or nominees as directors of the company. There are important advantages in this procedure:

1. Industrial plants are divorced from Government procedural and salary limitations but remain subject to the policy direction of a department of state or semi-government agency.
2. Industrial plants can be sold to private persons at a later date, freeing the Government funds invested in them for further ventures. Public bodies are unlikely ever to be transferred to private ownership because of the legal changes that would be involved and the low level of profitability at which they usually operate.
3. Administrative and legal difficulties are reduced to a minimum. It is not necessary to initiate special legislation and constitute new public bodies with their own special statutes and powers. The companies can be registered under the terms of the Company Law of Iraq in the same way as private companies.

An alternative procedure would be to establish a sub-board - a management sub-board - that would be charged with the responsibilities of establishing the enterprises that in the opinion of the Development Board could be wholly or partly entrusted to private persons. It would be necessary to give this sub-board powers that would enable it to invest both equity and loan capital in the industrial enterprises approved by the Board. It should be provided with adequate funds for this purpose. The sub-board would follow the procedure recommended for the Industrial Bank and establish joint stock companies to build, operate and manage the projects. A possible variant of this procedure would be the establishment of a Board of Trustees under the jurisduction of the Development Board to assume the same responsibilities.

The boards of the companies established under one or more of these procedures would have to decide whether to manage the project directly by appointing its own executive subordinates, or to appoint an experienced foreign firm to take over this function on the basis of a management agency agreement.

D. MANAGEMENT AGENCY CONTRACTS

In other parts of the world serious abuses have arisen in connection with Management Agency Contracts, and great care should be taken to enforce the following:

1. The managing agency should not be allowed to give sole selling agencies to relatives or other persons or companies in whom the agency has an interest, and thereby cause the profit to be made by the selling agency and not by the company.
2. The managing agency should not be allowed to use the money of the company

to finance other enterprises in which the agency has an interest.

3. The managing agency should not be allowed to speculate for the company's raw material where the company would bear any loss.
4. The managing agency should not be allowed to manage a large number of companies so that the degree of ability that can be applied is sub standard.

Contracts should cover the following points:

1. **Preamble**

   This should set out the reasons for and purposes of the contract in general terms, state the objective of establishing and operating a profitable business, and add that an important part of the agent's duty is to train local managers and workers.

2. **Relative Responsibilities of the Board of Directors and The Managing Agent**

   It should be clearly stated that at all times the managing agent is to be subject to the overall control of the board of directors, and that the management should have representation on the board of directors in order to obtain proper attention to its recommendations and expedite decisions.

3. **Personnel and Facilities to be Supplied by the Managing Agent**

   This should cover in some detail the type of personnel and in complete detail the key personnel that the managing agent will be called upon to supply, together with the facilities, if any, that should be made available by the managing agent. There should also be provided here or in some other place the approximate salaries which the key personnel will receive.

4. **Services to be Rendered by the Managing Agent**

   a. **Scope of Services**

      A description of the area of activity in which the company is to engage together with its limitations.

   b. **Services to be Rendered**

      These should be set forth in considerable detail, under headings as suggested below. They indicate the complete services which the managing agent will be expected to render.

      (1) Selling and Merchandising of products including sales promotion, advertising, etc.

      (2) Production and Manufacturing in all its phases.

      (3) Production Planning and Scheduling. All the phases of production planning and scheduling; including planning, scheduling, and supervision of all aspects of the manufacturing process, inventory control, production scheduling, coordination between production and selling activities, and maintenance of plant and equipment.

      (4) Purchasing. This should set forth the purchasing functions including the procurement of raw materials, supplies, fuel, power, machinery, and equipment.

      (5) Engineering, Technical, etc. This should provide for the engineering, technical and research services, including design, installation, and testing of machinery; the furnishing of technical

data and knowhow; laboratory, experimental and development work, industrial engineering, and work load and time studies.

(6) Accounting. This should set forth the complete accounting function including the financial and general accounting procedures and controls, cost accounting, and all other functions of a complete accounting department, including the preparation of periodic reports and statements to the board of directors and other interested parties; and should be set up in accordance with standard accounting practices. It should require that an independent public accountant, who is appointed by or meets the approval of the board of directors, be retained to make annual audits and the like.

(7) Market Analysis and Statistics.

(8) Shipping, Trucking, and other Transportation Services. This should include all traffic control and all other functions normally performed by shipping and traffic departments.

(9) Training of Iraqi Personnel. This should provide for the establishment of a training program, the function of which is to train personnel gradually to replace the foreign staff - starting in the lower echelons at first, and pointing towards the gradual replacement of the trained executives necessary to carry on the business. The training program should be evaluated at stated periods by the board of directors.

5. **Extension of Agreement**

The agreement should probably be extended to include the management of any subsidiary that may be created to carry out a particular function, a selling agency, for example.

6. **Exclusiveness of Agreement**

This should provide that the managing agent be exclusively responsible for the performance of the contract and that he shall have the exclusive right to perform during the term of the contract all the services described in this agreement.

7. **Compensation Payment**

A. Compensation to Managing Agent. The amount of compensation that the managing agent is to receive should be set forth in clear and concise terms.

B. Advance Payments to Managing Agent. This should set forth how advance payments, if any, are to be paid to the managing agent and upon what date.

C. Reimbursement for Expenses of Managing Agent. This should clearly provide for the reimbursement of expenditures made by the managing agent on account of the company; a complete statement of these expenses should be submitted prior to approval of the board of directors.

8. **Determination of Compensation**

This should provide for the method of determining compensation, and should be subject to the review and certification of a firm of independent public accountants representing the board of directors. Gross sales should not be a measure of compensation to the managing agent; the

temptation to make unprofitable sales is too great. A flat fee should be established until the company is operating, after which time a percentage of either gross profit or net profit should be established as compensation.

9. Withdrawal and Termination
   A. Term of Agreement.
   B. Right of Termination prior to end of term by company.
   C. Right of Termination prior to end of term by managing agent.
   D. Provision of settlement in event of termination prior to end of term.
10. Miscellaneous Provisions
   A. Responsibility and Indemnity of Managing Agent.
   B. Covenants of Further Assurance.
   C. Agreement not a Partnership.
   D. Arbitration.
   E. Notices.
   F. Limitation of Assignment.
   G. Governing Law.
   H. Other miscellaneous provisions as necessary.

VI. CAPITAL AND INVESTMENT CLIMATE

The Development Board's allocation of ID 21 million for industrial development during the period 1956-1959 is adequate to finance the first two phases of the program recommended in this report. Although substantial further sums will be required in subsequent years, there should be no financial difficulty in implementing the program. Iraq's assured financial position gives her an enviably satisfactory position from which she can undertake bold and imaginative industrial development schemes. Nevertheless, several important problems remain for consideration and urgent action.

Although Development Board funds can be used for the establishment of new industrial projects, the continued organic growth of industry can be assured only by additional measures. Successful and rapid industrial progress depends on the skill and enterprise of very large numbers of people of whom many must be willing to risk their financial resources to take up new opportunities. Development Board action can facilitate and generally control this process; but unless the Government is to become the agency for planning and conducting the nation's entire industrial life, every effort must be made to decentralize the process of decision-making in industrial matters. The administrative problems involved in the centralized control of industrial undertakings are formidable and are almost certain to lead to delay and undue caution in a field where speed and decision are of the greatest importance. In other countries, industrial advance and expansion is initiated by industrialists and financed from profits that are constantly searching for new employment.

The proposed new Industrial Development Finance Company would make a significant contribution to this fundamentally important process of self-generating industrial advance, both by channeling Development Board funds into profitable industrial opportunities and by helping to mobilize the nation's private and corporate savings for industrial development. Further measures are, however, necessary. The process of economic development that the Board is pursuing will raise the level of national income and at the same time the level of private domestic savings. It is of the greatest importance that immediate steps be taken to mobilize those new savings and direct them towards nationally desirable industrial projects. To achieve this end, Iraq's capital market must be improved. At the moment, this essential mechanism of industrial progress is seriously under-developed and wholly inadequate for the important future role it will be called upon to play. Improvement in mechanisms must also be accompanied by an improvement in the investment climate, so that savers will be encouraged to invest their funds in local industry and foreign capital attracted to Iraq.

A. PRIVATE AND CORPORATE SAVINGS IN IRAQ

Although it is impossible to make reliable estimates of the size of current private domestic savings in Iraq at the present time, an indication of

their origin and magnitude is presented below:

	(ID MILLIONS)					
	1950	1951	1952	1953	1954	1955
Savings Deposits	-	1.5	1.5	1.67	2.36	2.48 (April)
Fixed Deposits	.7	.9	.8	1.5	1.98	2.59 (April)
Post Office Savings Bank	.9	1.0	1.2	1.55	1.93	2.12 (April)
New Capital Issues[1]	.88	N/A	3.075	3.330	4.243	7.500 (Whole Year)

Domestic building undoubtedly absorbs substantial further amounts of savings, but figures are not available. During the fiscal years 1952-1953 and 1953-1954 mortgage loans exceeded ID 1.3 million[2] - an increase of ID 1 million over 1951-1952.

The Mortgage Bank regulations permit loans up to a maximum of 60% of the value of the property involved, but in practice loans seldom exceed 50%. On the assumption that 50% of private building takes place without Mortgage Bank assistance, it seems probable that private savings currently amounting to at least ID 4 million are absorbed in house construction.

The upward movement in savings and fixed deposits, Post Office Savings Deposits, and New Capital Issues is likely to be further accelerated as income levels are raised by development spending. Private building will be joined by government-financed construction, and a shortage of raw materials will result that may seriously check the rate of expansion and the rate at which private savings are absorbed in building construction.

Corporate savings in the form of retained business profits are likely to increase somewhat for the financing of extensions and new enterprises, although the practice of distributing the entire company profits to shareholders may prevent corporate savings from becoming an important source of investment funds for many years.

In summary, private and corporate savings are almost certain to increase substantially during the next four or five years and will provide a source of investment funds for industrial development. The problem remaining is to ensure that they are directed into appropriate channels. This need requires the improvement of the investment climate and the development of institutions for mobilizing and directing the flow of savings.

1. Including small amounts subscribed by the Industrial bank.
2. Annual Report, 1953, The National Bank of Iraq.

B. IMPROVEMENT IN THE INVESTMENT CLIMATE

The complex of economic, physchological, and political factors that influence the process of investment decision is not susceptible to detailed analysis; nor is it entirely within the power of governments to control. Nevertheless, government action can do much to influence and guide the process. Of fundamental importance is the maintenance of public security and the enforcement of a well conceived and generally acceptable body of laws. In this respect, Iraq's situation is greatly superior to that of many other parts of the industrially under-developed world. Sound economic policies, particularly in regard to the public finances and policies of economic development, are also of paramount importance; and here, too, Iraq's position is satisfactory. Measures recommended elsewhere in this report that will incidentally lead to an improvement in the investment climate include the provision of low cost and plentiful power supplies, improvements and extensions in transport, improvements in labor training, and proposals to improve the quality and acceptability of domestically manufactured products. Two further measures are, however, necessary.

In other countries the process of industrial investment has been greatly assisted by the development of the corporate form of economic organization. The savings of large numbers of people and institutions have been mobilized for industry by the issue of securities that permit their purchasers to share in the profits of industry and at the same time maintain the liquidity of their savings. Corporate economic organization is becoming increasingly important in Iraq where the company law has been taken over from the Indian Company's Act of 1911, a law that is textually identical with the British Company Law of 1909. Although this code has served a useful purpose, it is badly out of date and offers inadequate protection to shareholders against improperly optimistic prospectuses and defective accounting procedures. The British Company Law has been substantially modified and brought up to date on two occasions since 1909. The development of the corporate form of business and industrial organization in Iraq would be assisted by a new and up-to-date company law drawn up for Iraq's special needs. The task of drafting a modified law should be entrusted to a foreign expert with appropriate experience in some other industrially under-developed country.

Present legislation tends to discourage foreign capital employed in industrial enterprises. It is the clear intention of the Law for the Encouragement of Industry to foster local industrial enterprise, but this intention is not, in fact, realized by discrimination against foreign capital. The privilege of duty-free importation of plant and equipment, and tax remission for new industries, is desirable; but to limit this privilege to companies in which the majority of shares are held by Iraqi nationals is to limit Iraq's participation in the free interchange of ideas and technology from which other countries - particularly Britain, America, and Canada - have gained so much. In the nineteenth century, Britain exported her capital and technical ability to the United States, among other countries, where it was used so successfully that British industry is itself now being rejuvenized by a return flow of capital, and new ideas. Iraq with her limited resources for technological and industrial research

can gain much from the free importation of capital and technical skill. Unfortunately, present legal enactments do not encourage this process. Iraq does not at present need foreign capital, but she suffers from a serious shortage of entrepreneurial ability that may, without assistance from abroad, inhibit industrial growth. It might be possible to attract a certain amount of this assistance in the form of minority interests, but many foreign concerns will be reluctant to bring their capital to Iraq unless they can retain its full control.

It is true that much foreign investment in economically under-developed countries in the past has been primarily for export industries and of comparatively small benefit to the host countries, but this has generally been bacause of limited domestic markets. Iraq's domestic market, however, is expanding rapidly and is likely to attract foreign capital to manufacture for the Iraqi market. Possible abuses can be guarded against by individual agreements to admit foreign enterprises and, if necessary, to control the remittance of profits and the repatriation of capital. When such agreements have been agreed upon, foreign capital should be free to operate on equal terms with domestic capital and to play its part in raising the output of Iraqi industry.

C. IMPROVEMENT IN INVESTMENT AND FINANCIAL MECHANISMS

Improvements in the investment climate and in the supply of private investable funds will fail to achieve maximum results unless the financial mechanisms for mobilizing and directing them are improved. Iraq does not possess a capital market for the purchase and sale of existing securities or for the issue of new ones.

It is unlikely that special institutions to organize new issues of capital and promote new companies will be needed for many years, but substantial improvement in the present situation would be achieved by the establishment of the Industrial Development Finance Company recommended elsewhere in this report. The task of this new bank would be to promote new enterprises and at the same time provide an additional mechanism and set a high standard. The Industrial Development Finance Company might be assisted in this important task by the Commercial Banks, which should be encouraged to lend their names and services to properly investigated promotions. It is not necessary that any form of guarantee should be given because the mere association of a well-trusted bank with a new venture is likely to increase public confidence.

Although stock exchanges in other countries have frequently been used for financial speculation, they have a vital role to play in industrial development. Their primary function is to provide a ready market for government and industrial securities. If the investing public is to be enlarged to include savers in the middle income groups, a market in which securities can be sold at short notice must be established. The small number of independent brokers and the share department of the Rafidain Bank provide valuable but inadequate facilities for this purpose. Professor Iversen has proposed that the National Bank ''should announce its willingness to act as an intermediary between buyers and sellers of bonds and shares and publish lists of the bond and share prices at which transactions have been carried out or at which it has orders to buy

or offers to sell particular securities.''[1] The adoption of this recommendation would be a step towards the eventual establishment of a stock exchange in Iraq. Professor Iversen has also recommended ''that the National Bank, the Treasury and the Development Board should issue interest bearing securities with the object of familiarizing the public with the holding of paper titles and providing an adequate pool of securities for the capital market.''[2] It is recommended that the Development Board in consultation with the National Bank and the Treasury should carefully consider the important problem of building up a capital market in Iraq that can play a part in the country's economic development.

D. WORKING CAPITAL FOR INDUSTRIAL PLANTS

In Iraq the Commercial Banks, with the partial exception of the Rafidain Bank, are traditionally providers of services and credits for foreign trade. To some extent this is due to their affiliations with foreign countries, and to some extent to the hitherto small demand for industrial loans and the legal difficulties involved in granting them. The Development Board will probably wish to provide the new enterprises it establishes with working capital; and, except where it is necessary to expand the scale of operations, little difficulty seems likely in these cases. Other enterprises, however, including those established by the Industrial Bank, find serious difficulty in obtaining adequate supplies of working capital. This difficulty can be overcome by the establishment of additional domestic commercial banks, as Professor Iversen has recommended, and by the removal of legal barriers to the bankers' general pledge that discourage many bankers from making short-term loans to industry. Bankers requiring security for their loans can accept mortgages only on specific stocks of goods that immediately become unusable by the borrowers, thus defeating the purpose of the loan.

1, 2 Monetary Policy in Iraq, Carl Iversen.

CHAPTER VII

RECOMMENDATIONS

CHAPTER VII TABLE OF CONTENTS

RECOMMENDATIONS

		Page
I.	THE EXTENSION AND IMPROVEMENT OF EXISTING INDUSTRIES	377
	A. Building Materials and Construction	377
	B. Date-Product Industries	378
	C. Agricultural Industries	379
	D. Metal Product Industries	380
II.	THE ESTABLISHMENT OF NEW INDUSTRIES	382
	A. Rayon Manufacture	382
	B. Manufacture of Caustic Soda and Chlorine	382
	C. Sulfur Recovery from Kirkuk Natural Gas	383
	D. Building-Materials Industries	383
	E. Date Product Industries	383
	F. Paper Manufacture	384
	G. Steel Rolling and Steel Making	384
III.	INDUSTRIAL OPPORTUNITIES THAT APPEAR TO BE SUITABLE FOR ESTABLISHMENT BUT FOR WHICH CERTAIN FURTHER DATA MUST BE OBTAINED BEFORE THE FINAL DECISION IS TAKEN	386
	A. Utilization of Natural Gas	386
	B. Fertilizer Production	386
	C. Manufacture of Plastic Materials	386
IV.	INDUSTRIAL POSSIBILITIES THAT APPEAR TO NEED NO FURTHER CONSIDERATION AT PRESENT	388
	A. Natural Gas	388
	B. Fertilizer Production	388
	C. Glass Manufacture	388
	D. Manufacture of Pharmaceutical Products	388
	E. Textile Manufacture	389
	F. Iron Manufacture	389
V.	THE FINANCE AND ADMINISTRATION OF THE INDUSTRIAL PROGRAM	390
VI.	THE PROMOTION OF INDUSTRIAL DEVELOPMENT IN IRAQ	391
	A. Market Development	391
	B. Fuel and Power	391
	C. Transport	391
	D. Labor and Labor Training	391
	E. Management	392
	F. Capital and Investment Climate	392

I. THE EXTENSION AND IMPROVEMENT OF EXISTING INDUSTRIES

A. BUILDING MATERIALS AND CONSTRUCTION

(1) A large proportion of the existing brick plants should be induced to install steam-heated drying equipment. This equipment would be used to replace the present sun drying method and would permit extension of the production period to 300 days per year from the present 200 days. Thus, a 50% increase in the capacity of each plant so equipped would be effected and far better bricks could also be produced. The cost of alteration of an existing plant is in the ID 20,000 - ID 30,000 range. It may also be necessary to build a number of new plants, but these should not be encouraged until substantial members of dryers have been installed in the existing plants.

(2) A number of small plants to manufacture concrete blocks, tiles, pipes, beams, and other products should be established. Concrete-block-making equipment can be purchased for ID 2000 - ID 3000, and equipment costs for other concrete products should not exceed ID 5000 - ID 6000. It may be possible during the next few years to absorb the output of up to 40 plants situated in Baghdad, Basra, and Mosul. Steps should be taken to encourage engineers and contractors to use larger quantities of concrete products.

(3) Immediate steps should be taken to increase the number of sand-lime and cement brick plants, and the use of these greatly superior bricks should be strongly encouraged. Equipment costs for a plant having a daily capacity of 50,000 bricks would be up to ID 75,000 as compared with ID 55,000 - ID 65,000 for a dryer-equipped clay-brick plant of similar capacity. However, it should be noted that this plant equipment could also be used to produce concrete blocks and other products; thus the plant would have great flexibility.

(4) Plants for the production of calcined gypsum for use in the manufacture of gypsum concrete and gypsum blocks should be established in Iraq. A plant with a daily capacity of 100 tons would cost approximately ID 50,000; block-making equipment with a daily capacity of twenty tons would cost an additional ID 15,000 - ID 20,000.

(5) The Development Board should immediately indicate to the Industrial Bank that it will be willing to provide funds for the Bank, to encourage private businessmen to take up the opportunities listed above. The highest priority should be given to installing dryers in existing clay-brick plants, the lowest to building new clay-brick plants and establishing a large-scale lime industry. If an Industrial Development Finance Co. is established, it should take over this function.

(6) Additional funds should be appropriated to the Geological Department of the Ministry of Economics, to enable it to carry out extensive

surveys into Iraq's building material resources. The department should search for new deposits of sand and gravel for use as aggregates; locate and evaluate deposits of clay for use in the manufacture of lightweight clay aggregates; examine and furnish analyses of Iraq's gypsum deposits to interested manufacturers; and search for limestone deposits suitable for the manufacture of limes, natural cements, and hydraulic limes in the years to come. Costs of these necessary surveys will, of course, depend on the intensity and scope of the work. Estimates for appropriation purposes should be obtained at once from the Geological Department.

(7) A Building Materials Advisory Board should be constituted to have overall charge of establishing policy on all matters pertaining to building construction in Iraq. This Board should delegate authority and issue directions to the various subordinate committees and laboratories recommended below.

(8) A materials Specifications Committee should be established to prepare adequate and realistic specifications for construction materials in use in Iraq. This committee should be subordinate to the Board recommended above, and should have at its disposal the services of the testing laboratory recommended below. It should work closely with manufacturers, but should be completely independent of them.

(9) A Building Code Committee should be formed to establish a suitable building code based upon materials and construction methods in use in Iraq. This Committee should also be subordinate to the Advisory Board and should be able to use the testing laboratory facilities recommended below.

(10) A Building Material Research Laboratory should be established in Iraq. It should be distinct from the routine testing laboratory and should be directly subordinate to the Advisory Board. It should also be instructed to work closely with the Geological Department of the Ministry of Economics.

(11) A Routine Testing Laboratory should be established which, while subordinate to the Advisory Board, should work in close coordination with the two Committees mentioned above. This laboratory, designed primarily for routine testing of materials to determine compliance with specifications, should work with the Research Laboratory but should be distinct therefrom. Research and routine testing are entirely separate functions requiring different facilities and different personnel. Attempts in other countries to combine the two laboratories into one have frequently resulted in the gradual elimination of either research or routine testing, depending upon the interest of the administrator.

B. DATE-PRODUCT INDUSTRIES

(12) A date syrup (dibis) plant having a capacity of 20-30 tons per day should be constructed, provided that:

(a) The plant can produce natural, clarified, and bleached syrup in any desired proportions. The services of an independent engineering consultant should be employed to examine the proposals for a

plant of this kind made to the Date Association by a German firm. The consultants should be instructed to evaluate the proposal from the point of view of both the operating costs and the practicability of the technical processes envisaged.

(b) During the date off-season the equipment is capable of conversion to the production of fruit and vegetable concentrates.

(13) The services of an experienced market-research organization should be secured to investigate the possibilities of creating an export market for the three date-syrup products and for liquid sugar. This proposed investigation would form part of the comprehensive research program recommended below. In the light of the market information provided and the experience gained in the new factory, consideration should be given to the building, at a later date, of a second date-syrup factory in Basra.

(14) A substantial sum should be set aside to finance a program of date research both in Iraq and abroad. This program, into which the activities of the Date Association's new research laboratory should be integrated, should include pure and applied research. An important position in the applied-research program should be given to market-research investigations, which experienced agencies would conduct, in the European and Near Eastern markets for date feed, invert sugar, and the three types of natural syrup.

C. AGRICULTURAL INDUSTRIES

(15) The Development Board should make funds available for the following purposes:

(a) To extend the present work in improving the quality of Iraq's livestock. Further work is necessary to improve livestock nutrition and to reduce the incidence of diseases inimical to the growth of the dairy, wool and leather, and meat-product industries.

(b) To improve the quality and yields of the cotton crop and increase plantings. Iraq's new textile industry is unable to obtain adequate supplies of raw cotton, and planned extensions will aggravate this difficulty.

(c) To administer a number of experimental, mobile cheese-making units. Their successful operation may lead to a substantial extension of the present dairy industry.

(16) The Industrial Bank should be enabled and instructed to provide financial assistance for the following purposes:

(a) The establishment of centralized milking operations.

(b) The establishment of equipment to sterilize milk.

(c) The establishment of cold-storage facilities.

(d) The establishment of a model farm for the cultivation of such oil-bearing crops as peanuts, soy beans, and sunflowers, all of which could serve as raw materials for the expanding vegetable-oil industry.

(e) The expansion of the wine industry.
(f) The expansion of the ready-made-clothing industry.
(g) The establishment of improved slaughterhouses in Baghdad and elsewhere. Mechanized flaying and carcass handling and the building of adjacent hide- and skin-curing centers should be encouraged.
(h) The expansion of the leather industry, with the exception of the semitanning segment.
(i) The establishment of sea-fishing fleets and fish-preparation plants.

(17) The relevant authorities should be assisted to initiate the following steps:
(a) Improvements in the quality of Iraq's milk supplies, by the introduction of milk inspection and identification. Greater confidence in milk and milk products must be established before expansion in the dairy products industry will take place.
(b) Improvement of slaughterhouse conditions. Iraqi hides and skins have a poor reputation in world markets; this could be improved if more careful attention were paid to hygienic conditions in the slaughterhouses. Meat-product industries would also benefit.

(18) Grading-enforcement procedures should be adopted in cotton, hides and skins, and grains. The advice of marketing experts in these fields should be sought and acted upon without delay.

D. METAL-PRODUCT INDUSTRIES

(19) The Development Board should indicate to the Industrial Bank that it will be willing to provide funds at an annual rate of ID 300,000, for the Bank to encourage well-considered plans to establish and expand the following manufacturing and service facilities:
(a) Metal doors and windows.
(b) Pipe fittings.
(c) Air coolers.
(d) Kerosene-fired water heaters and stoves.
(e) Metal furniture.
(f) Refrigerators.
(g) Aluminum kitchen ware.
(h) Solar stoves.
(i) Spare parts for agricultural machinery.
(j) Central machine shops and foundries in Baghdad, Kirkuk, Mosul, and Basra.
(k) Mobile Agricultural Repair Shops.
(l) Central garage in Baghdad.

(20) Technical assistance should be provided by the Development Board, through the appropriate agencies discussed elsewhere in this report, to businessmen who wish to expand or establish metal-products industries. This technical assistance should be provided to both large and small enterprises.

(21) A Department of Standards should be established in Iraq to develop and enforce a Manufacturer's Code in cooperation with manufacturers. This code should serve to increase the acceptance of domestically manufactured products by the Iraqi public, by the maintenance of high manufacturing standards. The Department of Standards should become a part of the Department of Industry, but should call upon the agencies providing technical assistance for guidance in developing the codes and in improving manufacturing techniques.

II. THE ESTABLISHMENT OF NEW INDUSTRIES

A. RAYON MANUFACTURE

(22) Rayon textile facilities should be established, consisting of two basic units. One of the units should be a weaving mill with a capacity of 12.5 million square meters, together with finishing facilities. The other unit should consist of a mill with a spinning capacity of 7 million square meters and a weaving capacity of 12.5 million square meters, together with finishing facilities. These textile facilities would at first use imported yarn and staple fiber.

(23) After the textile facilities have been established, a plant to produce viscose rayon filament yarn and viscose staple fiber should be established. This plant should have a capacity of 7 million lb of filament yarn and 3 million lb of staple fiber. Of its output, 70% would be used to supply the mills recommended for establishment, and 30% would be used to supply mills that have already been established.

B. MANUFACTURE OF CAUSTIC SODA AND CHLORINE

(24) A plant with a capacity to produce 10,000 metric tons of 100% caustic soda and 8315 metric tons of liquefied chlorine annually by the electrolytic process should be established in the Basra area. The implementation of this recommendation must be contingent upon the erection of a large chlorine-consuming plant (such as one for the production of polyvinyl chloride, recommended elsewhere in this report) to provide an outlet for chlorine.

(25) Funds should be provided to the Geological Department of the Ministry of Economics to investigate a potential salt deposit at Basra. A ground deposit of salt, the principal raw material of caustic soda production, is generally preferred as a source of supply to salt obtained by solar operation. At present, however, the only proven sources of salt in Iraq are the solar-evaporation operations, the major one being at Fao. The possibility of salt deposits at Basra is indicated by the presence of a salt plug, known to the Geological Department. Drillings and analysis are needed to determine the extent and quality of this deposit.

(26) In the event that a ground salt deposit of adequate capacity is not proven at Basra, steps should be taken to triple the capacity of the solar-evaporation operation at Fao. Specific action necessary is outlined in the report section.

(27) Production of caustic soda in the amount required in Iraq, by processes such as the Solvay Process and the Gluud and Loepmann Process (alternate methods of producing caustic soda without producing chlorine) should not be attempted. The usual minimum economical plant size is

extremely large (60,000 tons per year of soda ash, the intermediate product in these processes), and 80%-90% of the output would have to be exported.

C. SULFUR RECOVERY FROM KIRKUK NATURAL GAS

(28) A plant should be established to recover the 275 metric tons of sulfur that are currently being wasted daily in the amount of Kirkuk natural gas that is estimated by the oil companies to be surplus to their operational requirements. Export markets for sulfur are large, and it should be possible to develop markets for Iraq's output. A decision to establish a nitrogenous-fertilizer plant in Iraq would result in a substantial domestic demand for sulfur. Nevertheless, the decision to begin sulfur recovery need not be deferred until the decision to build a fertilizer plant is made. The sulfur recovered should in part be stockpiled for this future domestic use.

(29) Work should begin immediately to determine the most suitable markets for Iraq's sulfur and to arrange for its marketing and distribution. One possible arrangement would be to sell the recovered sulfur to an organization engaged in the sale of bulk chemical commodities in world markets.

(30) Exploration of ground sulfur deposits and the evaluation of suitable methods of mining the sulfur at Fatha Gorge should continue. Funds should be included in the budget of the Geological Department of the Ministry of Economics to cover this work. Any sulfur so recovered would necessarily have to be exported, since Iraq's markets in the foreseeable future could not consume all the sulfur in the natural gas.

D. BUILDING-MATERIALS INDUSTRIES

(31) Plants for the production of lightweight aggregate from local clays should be established. A plant of this kind, consisting of a kiln and auxiliary equipment, should cost in the order of ID 100,000. Immediate steps should be taken to encourage the use of lightweight aggregates, and further plants should be established if a satisfactory demand results.

(32) A lime industry should be established in Iraq. Lime would provide an important material for the production of superior bricks and a greatly improved mortar. It would also have uses in the agricultural and chemical industries. A modern lime plant with a daily capacity of 100 tons would cost up to ID 100,000. This need not be given a high priority, because lime production by the present small-scale methods can be expanded to meet the immediate needs.

E. DATE-PRODUCT INDUSTRIES

(33) A small-scale plant to produce animal feed concentrates from dates

and other food stuffs should be constructed. Since date feed would be a new and untried product that might encounter serious marketing and production difficulties, more experience should be obtained before larger capacity is built.

F. PAPER MANUFACTURE

(34) A pulp and paper mill with a nominal capacity of 15 tons per day should be established in Iraq. It would use ''qassab'' reeds (phragmites communis) as the basic raw material, supplemented by rice straw and imported chemical pulp; the soda process of pulp manufacture would be used. This recommendation is contingent upon a survey to confirm that a minimum of 9000 tons of air-dry ''qassab'' reeds is available annually at a cost of about ID 2 to ID 3 per metric ton. Funds should be made available through the Industrial Bank for the establishment of the mill, provided that plans are in general agreement with the points outlined in this report.

(35) Funds should be made available to the Ministry of Agriculture or other appropriate agency to make a survey of the availability of ''qassab'' reeds in the Basra area.

(36) The pulp and paper mill should be located in the Basra area because of the proximity of the reed supply. Actual site location, which will depend upon water and waste-disposal facilities as well as on the possibilities of future expansion, will require a field study by paper-mill specialists.

(37) Long-term agreements for the supply of reeds and straw should be made before the construction of the mill is begun, to prevent a sudden rise in the costs of raw material.

(38) The pulp and paper mill project should be handled by one contractor, responsible for turning over to the proprietors a complete operating mill with capable personnel hired from abroad and with the entire local labor force adequately trained. The contractor should be prepared to guarantee the quality and quantity of production and to operate the plant for a specified period of time if required.

(39) ''Birdi'' reeds (typha augustata) should not be considered as a paper raw material at this time; further work on evaluating their suitability should be carried on once a pulp and paper mill has been established. These reeds, as well as ''qassab,'' may eventually serve as a raw material for hardboard manufacture, but further tests are necessary.

G. STEEL ROLLING AND STEEL MAKING

(40) A steel-rolling mill with an annual capacity of 60,000 tons should be established in Iraq.

(41) A furnace to make 9300 tons of steel from domestic scrap each year should be added to the steel mill at a later date, to make billet-size ingots when the latter is in operation. A small steel foundry might be established at the same time.

(42) Additional steel furnaces and equipment to melt imported pig iron or scrap should be considered in the light of import prices and world supply conditions, when the furnace recommended above is in successful operation.

(43) The present ban on the export of steel scrap should be maintained, because the successful operation of a steel industry requires considerable quantities of scrap. Steel scrap that is melted and eventually cast or rolled into steel products will save Iraq many multiples of the foreign exchange that its export would secure.

III. INDUSTRIAL OPPORTUNITIES THAT APPEAR TO BE SUITABLE FOR ESTABLISHMENT BUT FOR WHICH CERTAIN FURTHER DATA MUST BE OBTAINED BEFORE THE FINAL DECISION IS TAKEN

A. UTILIZATION OF NATURAL GAS

(44) The use of natural gas as a raw material for producing petrochemicals for export should be further evaluated, because this use shows promise. Further information is required on markets and plant investment and operating costs for products considered to be suitable in addition to those recommended in this report. Zubair gas seems to be the better source at the present time, although further evaluation and the other requirements for Zubair gas may indicate that Kirkuk gas is also suitable, particularly if considered in conjunction with power-generation use in Baghdad.

(45) The export of natural gas as a fuel should not be considered as an undertaking by Iraq alone, since the indicated gas reserves and the rate of production are too small to justify the very large investment required (ID 120 million to ID 180 million) and since successful operation would require the cooperation of many countries. Firm evaluations of proposals are not complete, and further consideration should await the results of studies that have already been undertaken elsewhere. Participation of Iraq in such an operation should be on a short-term basis, because internal uses of gas may ultimately use the reserves that could be exported.

B. FERTILIZER PRODUCTION

(46) A plant to produce nitrogenous fertilizers should be established in Iraq, provided that:

(a) Further investigation confirms the existence of adequate export markets, or

(b) In the event that adequate export markets are not revealed by further examination, the Board considers it desirable to encourage the use of fertilizer in Iraq's agriculture in spite of the danger of unprofitable operation for a number of years.

(47) Encouragement and assistance should be given to the organizations that are studying soil conditions and irrigation practices in Iraq. On the basis of the knowledge obtained it will be possible to improve fertilizer utilization in Iraq and increase the present very small demand for it.

C. MANUFACTURE OF PLASTIC MATERIALS

(48) Plants to produce the plastic materials polyethylene and polyvinyl chloride, with annual capacities of 35 million lb and 10 million lb,

respectively, should be established, provided it is confirmed that:

(a) The manufacture of ethylene can be carried out as economically as preliminary investigations have indicated.

(b) Export markets will absorb the major share of the plants' output, as preliminary investigations have indicated.

(49) If ethylene production proves to be uneconomical, a study of the possibility of producing polyvinyl chloride from acetylene should be undertaken.

IV. INDUSTRIAL POSSIBILITIES THAT APPEAR TO NEED NO FURTHER CONSIDERATION AT PRESENT

A. NATURAL GAS

(50) The use of gas for a public gas-supply system should not be considered at the present time, because a preliminary evaluation indicates that even after five years' operation the revenue from gas sales would only defray operating expenses. The large investment required would merely provide a duplicate fuel and would divert the resources from other projects considered to be more important at this time. If natural gas has been piped from Kirkuk to Baghdad for power use, a public supply system may have a reasonable chance of economic success, and a further evaluation should be made in a few years.

(51) Consideration of the production of liquefied petroleum gas (LPG) should be deferred for some years. There are at present very limited potential domestic markets for this product, which is an expensive fuel. Evaluation of this possibility should wait until other facilities are established that will permit recovery of LPG as a joint product or by-product at lower cost. Export markets are limited since much of the present demand is supplied by existing refinery operations in the countries concerned.

B. FERTILIZER PRODUCTION

(52) Consideration of a plant to manufacture phosphatic fertilizers should be deferred for a number of years. Iraq's phosphate deposits have not yet been thoroughly evaluated and the use of phosphatic fertilizers is very small in the areas in which export markets would be sought.

C. GLASS MANUFACTURE

(53) Further study of the manufacture of bottle glass in Iraq should be deferred for two or three years, and the manufacture of flat glass should not be considered until demand is at least three or four times greater than it is at present.

(54) The Geological Department of the Ministry of Economics should be informed that there is no immediate intention to establish a glass industry in Iraq and that its search for suitable glass sand should be given a low priority. It should not, however, be discontinued, since further consideration may be necessary in two or three years.

D. MANUFACTURE OF PHARMACEUTICAL PRODUCTS

(55) The feasibility of establishing an industry to manufacture pharmaceuticals in Iraq, using imported raw materials, should be made a subject of further investigation in two or three years. Careful

evaluation is necessary to be certain that high-quality, low-cost drugs can be produced to compete with those currently imported.

(56) A careful study should be made of the regulations required to control manufacturing standards, distribution methods, product purity, etc. The necessary legislation should be enacted before any pharmaceutical operation is established.

(57) Pharmaceuticals should be manufactured in Iraq either by a subsidiary company or branch plant of a reputable foreign manufacturer, or under a license agreement with such a company. This method would provide technical skills, brand names, and the benefits of research by the parent company.

(58) Funds should not be made available by the Development Board for the establishment of a pharmaceutical industry in Iraq, until a thorough evaluation has been made to ensure that production can result in high-quality, low-cost products, and until necessary protective legislation has been enacted.

E. TEXTILE MANUFACTURE

(59) Facilities to produce fine-count cotton fabrics should not be established, because only a very small amount of this type of fabric is currently consumed. In addition, the type of raw cotton that would be required would have to be imported. The production of fine-count cottons in the variety of designs and colors that would be required would result in very high production costs.

F. IRON MANUFACTURE

(60) No further consideration should be given to proposals to produce iron in Iraq, since domestic ore deposits are inadequate and the use of imported ores does not offer any possibility of economic success. If larger, high-grade ore deposits were discovered in Iraq, further consideration would be necessary to determine whether their iron content and location justified the establishment of an iron-making industry.

V. THE FINANCE AND ADMINISTRATION OF THE INDUSTRIAL PROGRAM

(61) The Industrial Bank should be provided with additional funds by the Development Board and transferred from the direction of the Ministry of Finance to the Ministry of Development.

(62) The Industrial Bank should be charged with the responsibility of establishing joint stock companies to organize and manage the new industrial plants approved by the Board.

(63) Certain changes in the organization, powers, and methods of operation of the Industrial Bank should be made to enable it to carry out the important role in Iraq's industrial development that is recommended above.

(64) An Industrial Development Finance Company should be established to take over from the Industrial Bank its operations in regard to privately managed plants.

(65) Both the Industrial Bank and the proposed new Industrial Development Finance Company should supply technical assistance to the companies in which they are interested and appoint adequately trained staffs for this purpose.

VI. THE PROMOTION OF INDUSTRIAL DEVELOPMENT IN IRAQ

A. MARKET DEVELOPMENT

(66) A market-development program designed to increase the demand for locally manufactured products should be undertaken.

B. FUEL AND POWER

(67) Natural gas should be used for power generation at the Dibis and Basra stations. At these two locations, natural gas is the cheapest fuel available, on the basis of the prices established at the time of the J. G. White Company power study.

(68) Efforts should be made to find additional domestic and foreign markets for Bunker ''C'' oil, so that the Dora Refinery's output can be disposed of without difficulty. Natural gas should then be piped to Baghdad for power generation.

(69) Electric power should be made available for industry at a price that should not exceed 2 fils per KWH. It might be necessary to delay the introduction of this policy until additional generating capacity comes into existence, but the principle should be accepted as soon as possible.

C. TRANSPORT

(70) The recommendations made by Lord Salter should be acted upon. Particular attention should be paid to his important statement concerning the construction of minor roads giving the villages and farms access to the main transport system.

(71) Steps should be taken to increase the use of refrigerated and insulated cars for both road and rail transport.

D. LABOR AND LABOR TRAINING

(72) Principal emphasis should be placed on the on-the-job training of labor, to supply the skilled-labor needs of the industrial program.

(73) The training of Iraqi workers should be made a contractual obligation of contractors, managing agents, and foreign managers and technicians responsible for the construction and operation of industrial plants.

(74) The Industrial Bank should be instructed to ensure that adequate allowance for the costs of labor training is made by the managements of the organizations to which it grants loans.

(75) The selection of certain potential foremen and skilled workers should take place as soon as the decision to build a new plant is taken, so that they can be sent to factories in foreign countries for training or to receive training and instruction in Iraq.

(76) The Ministry of Education should be encouraged and assisted to expand and develop vocational schools along the lines indicated in the reports of UNESCO missions to Iraq.

E. MANAGEMENT

(77) The construction and planning of industrial projects should not take place until the senior persons who will be responsible for their management have been designated.

(78) An industrial project should be managed by a public body only if it is the intention of the Board to keep it under permanent Government control. In all other cases management should be entrusted to joint-stock companies registered under the terms of the company law of Iraq.

(79) The Board should pay careful attention to the terms of management agency agreements as certain abuses have arisen in connection with their operation in other countries.

F. CAPITAL AND INVESTMENT CLIMATE

(80) Steps should be taken to improve the investment climate in Iraq for both domestic and foreign capital along the lines indicated in the section of the report dealing with capital and investment climate.

(81) An attempt should be made to improve the financial institutions concerned with mobilizing domestic savings and directing them into industrial investment.