Projahnmo I sub-study:

Maternal behaviors and morbidity during pregnancy, delivery, and the early postpartum period in rural Bangladesh

Final Report

April 2007

Acknowledgements

We thank the many individuals in Sylhet district of Bangladesh who gave their time generously and the field and data management staff of Projahnmo. We thank the Bangladesh Ministry of Health and Family Welfare colleagues at the sub-district, district and central levels, and the members of the Shimantik executive committee for their valuable help and advice. The critical innovative inputs of Projahnmo Maternal Morbidity Study Group members are acknowledged.

PROJAHNMO was funded by the United Stages Agency for International Development (USAID)'s Global Health Bureau and Bangladesh mission and by the Saving Newborn Lives Initiative (SNL) of Save the Children-US, through a grant from the Bill and Melinda Gates Foundation. Funding for the maternal morbidity sub-study of the PROJAHNMO Project was made possible through support provided by the Office of Health, Infectious Diseases, and Nutrition, Global Health Bureau, U.S. Agency for International Development, under the terms of Award No. GHS-A-00-03-00019-00, Global Research Activity Cooperative Agreement. The opinions expressed herein are those of the author(s) and do not necessarily reflect the views of the U.S. Agency for International Development.

Investigators:

Principal Investigators:

JHU:	Abdullah H Baqui
ICDDR,B:	Shams El Arifeen

Co-Investigators:

JHU:	Gary L. Darmstadt, Cynthia K. Stanton, Peter Winch, Saifuddin Ahmed, Mathuram Santosham, and Robert E. Black
ICDDR,B:	Habibur R. Seraji, Istiaq Mannan, Moshfiqur Rahman, and Marjorie A. Koblinsky
ICMH :	Sameena Chowdhury
JHU Student Investigator:	Allisyn C. Moran
Field Manager:	Kazi Monira Afzal
Data Manager & Analyst Programer:	Nazma Begum

Name of Collaborating Institutions:

Department of International Health, Johns Hopkins Bloomberg School of Public Health, USA

Department of Population and Family Health Sciences, Johns Hopkins Bloomberg School of Public Health, Baltimore, MD, USA

International Centre for Diarrhoeal Disease Research, Bangladesh (ICDDR,B)
Institute of Child and Mother Health, Dhaka, Bangladesh

This report was prepared by Allisyn Moran and Abdullah Baqui

I. Introduction

Maternal mortality is a substantial burden for developing countries. Each year, 500,000 to 600,000 women die from complications related to pregnancy and childbirth, with 99% of these deaths occurring in developing countries (WHO et al., 2004).[1] Since these complications cannot be predicted with certainty or often can not be prevented, giving birth with a medically trained provider is the key intervention in safe motherhood programs (Starrs, 1997). Improving maternal mortality has received recognition at the global level as evidenced by its inclusion in the Millennium Development Goals (United Nations, 2004).

Among problems experienced by women related to child-bearing, maternal mortality is the "tip of the iceberg". The WHO estimates that 52 million women suffer from morbidity related to the five direct obstetric causes of maternal death,[2] with millions more suffering from morbidity related to non-fatal outcomes of obstetric complications as well as indirect causes of death (AbouZahr, 2003).[3]

In Bangladesh, almost all births take place at home without assistance from medically trained providers (87%) (NIPORT et al., 2003). Recent studies demonstrate that a large proportion of women report experiencing pregnancy- and delivery- related complications (NIPORT et al, 2001), and more than 80% of women giving birth in rural areas reported suffering from a postpartum illness (Goodburn et al, 1994; BIRPERHT, 1994). In the baseline survey for the project "Community-Based Interventions to Reduce Neonatal Mortality in Bangladesh" in Sylhet, 75% of women reported at least one maternal complication during pregnancy, delivery and the postpartum (Baqui & Ahmed, 2004). Maternal anemia and postpartum fever are also estimated to be high. In Bangladesh, 55% of pregnant women are anemic (Helen Keller Worldwide, 2002).

Although perceived complications and morbidity are high, few women report seeking care from medically trained providers. A national survey conducted in 2001 found that 60.1% of women reported at least one complication during pregnancy, childbirth, or the postpartum, and 62% of women who perceived their complication to be life-threatening sought treatment (NIPORT et al, 2003). However, only 32% of women with "life-threatening" complications sought care from a medically trained provider (NIPORT et al, 2003).

In the context where home-based birth is the norm, safe motherhood programs focus on improving recognition of complications and promoting care-seeking behaviors while simultaneously improving the quality of facility-based care. Community-based interventions include improving knowledge of danger signs, encouraging women and families to plan for a clean delivery with a trained birth attendant, taking iron/folate to prevent anemia, and planning for referral to an appropriate facility if a complication occurs. There is little evidence that these

[1] The World Health Organization defines a maternal death as "the death of a woman while pregnant or within 42 days of termination of pregnancy, irrespective of the duration or site of the pregnancy, from any cause related to or aggravated by the pregnancy or its management, but not from accidental causes" (WHO, 1992).
[2] Direct obstetric causes of maternal death include: post-partum hemorrhage; puerperal sepsis; pre-eclampsia and eclampsia; obstructed labor; and abortion.
[3] Due to paucity of data, estimates of morbidity related to non-fatal health outcomes of other direct obstetric complications (ectopic pregnancies, cerebrovascular accidents, embolisms, etc) as well as indirect causes of death (anemia, malaria, tuberculosis, puerperal psychoses, postpartum depression, and suicide) are not included in this estimate.

strategies are effective, and women continue to seek care too late or not at all (Koblinsky, 2003a; Koblinsky, 2003b; Fronczak et al. 2004; Stanton, 2004; Uzma et al., 1999).

Maternal morbidity is a substantial burden on the health of women in Bangladesh and throughout developing countries. There are few randomized controlled trials that examine the effects of community-based interventions on maternal morbidity or mortality (Ensor & Cooper, 2004). Further research is needed to more carefully document the community-based incidence of maternal morbidity and to evaluate program impact on maternal morbidity. These findings will inform safe motherhood programs and programs that aim to simultaneously address maternal and neonatal morbidity and mortality.

II. Study Objectives

This study addressed the following research questions:

1. What is the prevalence of self-reported pregnancy, delivery and early postpartum morbidity in a cohort of women in Sylhet district, Bangladesh?

2. What is the impact of a package of maternal care interventions on selected maternal behaviors and morbidities?

The primary objective of this study is to provide descriptive information on self-reported maternal morbidities and care seeking behaviors for future planning. These morbidities and care seeking behaviors were measured among women with perceived complications/morbidities, women who received life-saving surgery, and women who died from a maternal cause. The secondary objective is to measure the effect of a package of community-based maternal care interventions by comparing differences in three study arms on maternal behaviors (care seeking for obstetric complications among women with perceived complications/morbidities, women with life-saving surgery, and women who died from a maternal cause) as well as selected maternal morbidities (anemia).

II. Background

In the literature, there is a wide reported range of prevalence of maternal morbidities worldwide. Estimates range from 16.5 pregnancy-related complications per maternal death to more than 100 complications per maternal death (Datta et al, 1980; Koblinsky, 1995). Furthermore, the reported morbidity rates vary substantially among populations. In West Africa, for example, the incidence of morbidity during labor and delivery varied between 2.8% to 8.4% in seven cities with great variability in complications reported (MOMA group, 1998). In another study in rural Bangladesh, 26.2% of women experienced a pregnancy- or delivery-related complication (Vanneste et al, 2000).

Variability in reported rates of morbidity is due, in part, to the different methods used to measure maternal morbidity, depending on whether the measurement is community-based, facility-based, or a combination of facility and population-based data. Community-based measurements of morbidity include women's self-reports of complications/ morbidities experienced during pregnancy, delivery and the postpartum period through

surveys. Research has demonstrated that women's self reports over- or under-estimate morbidity, in comparison to medially diagnosed conditions (Fortney & Smith, 2000; Ronsmans et al, 1997; Seone et al., 1998; Stewart & Festin, 1995; Sloan et al, 2001; Danel et al, 1996). Thus, while self-reported morbidity can be useful in estimating the gross burden of maternal morbidity and women's perceptions of problems in relation to care-seeking behavior, these reports cannot be used as accurate estimates of prevalence or incidence of maternal morbidities (Fortney & Smith, 2000; Yassin et al, 2003).

The second approach to measuring maternal morbidity is facility-based. The concept of "Near Miss" was developed to identify women who experienced a "severe, life threatening obstetric complication necessitating an urgent medical intervention in order to prevent the likely death of the mother" (Filippi et al, 2000, p. 310). These women are identified through medical records, and then interviewed retrospectively to document complications experienced during pregnancy, delivery and the postpartum. In a study in Benin, women's self reports were fairly accurate in identifying eclamptic seizures, abnormal bleeding in the 3rd trimester, and episodes of hemorrhage for a recall period of two years; validity of identifying obstructed labor and postpartum infection was weak (Filippi et al, 2000). However, since the majority of women in developing countries give birth at home (52%), facility-based estimates may under-estimate the magnitude of the problem (Demographic and Health Surveys, 2004).[4] Selection bias is also an issue. Women who deliver in facilities often have more education, are of higher socioeconomic status, and may be more likely to experience complications during pregnancy and delivery (Ronsmans et al, 1997; Murray & Chen, 1992). Near Miss on admission to the facility is more accurately regarded as an indication of delayed referral, and not a population-based estimate of morbidity.

The third approach to measuring maternal morbidity utilizes a combination of population- and facility-based data to measure Met and Unmet Need. Both Met and Unmet Need look at the proportion of women who receive care for complications in an essential obstetric care facility (Ronsmans et al, 2002). The numerator for Met and Unmet Need is based on facility records of women treated for complications, while the denominator is an estimate of the percentage of women experiencing obstetric complications. For Met Need, the denominator is based on the WHO estimate of 15% of women who will experience a complication. Unmet Need was developed to measure the "proportion of major obstetric interventions (MOI)[5] performed for absolute maternal indications (AMI)[6] among all births". De Brouwere and colleagues have found that approximately 1% of all pregnant women will require a major obstetric intervention, and this serves as the denominator for the unmet need indicator (De Brouwere & Van Lerberghe, 1996; De Brouwere & Van Lerberghe, 1998). This estimate is based on extensive medical record review from urban areas in developing countries, such as Morocco (0.93%), Guinea (1.14%), and Indonesia (1.2%), and is also consistent with historical data from England and Wales.

[4] Based on DHS data from most recent surveys in: Benin; Burkina Faso; Cameroon; Cote d'Ivoire; Ethiopia; Gabon; Ghana; Guinea; Kenya; Malawi; Mali; Mauritania; Niger; Nigeria; Rwanda; South Africa; Tanzania; Togo; Uganda; Zambia; Egypt; Bangladesh; Cambodia; India; Nepal; Philippines; Colombia; Dominican Republic; Guatemala; Haiti; and Peru.
[5] Major obstetric interventions include caesarean section, laparotomy, version and extraction, symphisiotomy, and crainiotomy/cranioclasis.
[6] Absolute maternal indications can include severe antepartum hemorrhage, placenta previa, abuptia, severe postpartum hemorrhage, feto-pelvic disproportion, and shoulder, transverse or brow presentation. These severe conditions require a MOI to ensure maternal survival. The final definitions of these terms are determined in country.

There are few studies that measure the prevalence and incidence of maternal morbidity at the community-level where complications are measured by health workers and validated by physicians. Bang et al. (2004) conducted a study in the Gadchiroli district of Maharashtra, India to measure levels of maternal morbidity in a community-based setting. The incidence of maternal morbidity as recorded by village health workers and validated by physicians was 52.6% in the study area, 17.7% during labor and 42.9% during the first 28 days postpartum. The most common postpartum morbidities included breast problems (18.4%), secondary postpartum hemorrhage (15.2%), postpartum fever (12.0%), and infections of the genital track (10.2%). Overall, 15.3% of women required emergency obstetric care, and 24.0% required non-emergency medical care (Bang et al, 2004).

In Bangladesh, studies have been conducted to measure levels of maternal morbidity using community-based as well as facility-based data. In the Bangladesh Maternal Health Services and Maternal Mortality Survey 2001 (BMMS), 60.1% of women reported at least one complication during pregnancy, delivery or the postpartum periods; 27.2% of women reported headache/blurry vision/high blood pressure; 13.5% of women reported edema/preeclpasia; and 16.3% of women reported prolonged labor (NIPORT et al, 2003). In a study conducted by Goodburn et al. in rural Bangladesh, women's reports of complications were validated via physical examination conducted by a trained health worker at 28 weeks of pregnancy and 48 hours, 2 weeks, 6 weeks, and 12 weeks post partum. A total of 2.4% of women experienced pre-eclampsia, 2.7% experienced severe postpartum hemorrhage, 2.4% experienced uterine prolapse, and 16% experienced secondary postpartum bleeding (Goodburn et al, 1994). Another study conducted in a Dhaka urban slum area where women's reports of complications were validated by a physician between 14 and 22 days postpartum found similar levels of maternal morbidity: 8.6% of women experienced pre-eclampsia; 4% of women experienced severe postpartum hemorrhage; 10.2% of women experienced uterine prolapse; and 29.8% of women experienced secondary postpartum bleeding (Fronczak, 1997). A study in the ICDDR,B's Matlab study area reviewed facility reports of women who received a major obstetric intervention for a life-threatening complication (AMI) validated by physician assessment for a twelve year period. They found a 0.7% level of Major Obstetric Intervention (MOI) for Absolute Maternal Indications (AMI) (Dieltiens, 2003).

In the baseline survey of Projahnmo I in Sylhet, 75% of women reported at least one maternal complication during pregnancy, delivery or the postpartum period. Women who had given birth in the past year were prompted on four specific complications (excessive bleeding, high fever, foul vaginal discharge, convulsions). About 19% of women reported at least one complication during the pregnancy period. Thirty percent of women reported at least one complication during their delivery, while more than half of the women reported at least one postpartum complication. This study did not include physician validation.

Maternal anemia is an important cause of morbidity with serious health consequences for pregnant women and their children, leading to reduced productivity for adults and mental and cognitive impairments in children (Helen Keller Worldwide, 2002). Pregnant and lactating women suffer additional consequences; anemia increases the risk of maternal death due to cardiac failure from postpartum hemorrhage (Helen Keller Worldwide, 2002;

Stoltzfus, 2003). Children born to women with anemia are more likely to be of low birth weight (less than 2,500 grams) (Helen Keller International, 2002), which is one of the leading causes of infant mortality (McCormick, 1985).

In South-east Asia, the World Health Organization estimates that 76% of pregnant women are anemic (WHO, 2000), which leads to 12,497,000 loss in DALYs and contributes to 324,000 deaths (Stoltzfus, 2003). In Bangladesh, anemia is highly prevalent. A national survey in 2001 found 55% of pregnant women to be anemic (hemoglobin less than 11 g/dL) (Helen Keller International, 2002). Safe motherhood programs focus on iron supplementation during pregnancy to decrease maternal anemia. However, there are many barriers to taking iron/folate during pregnancy. Community-level interventions can be effective if appropriately targeted to both pregnant women and health providers, but additional research is needed (Elder, 2000).

IV. Methods

Study Site and Population

This study was nested in the project entitled "Projahnmo: Community-Based Interventions to Reduce Neonatal Mortality in Bangladesh" (CHR# H.22.00.06.B1) in Sylhet district, Bangladesh, which is three-arm cluster-randomized trial. The goal of Projahnmo – I project was to improve maternal and newborn health. The primary aim was to evaluate the impact of implementation of a community-based maternal and newborn intervention package on neonatal mortality. The study area consisted of a population of 480,000 in three rural sub-districts (Beanibazar, Zakiganj, and Kanaighat) of Sylhet district, in northeastern Bangladesh. This area was selected based on high neonatal and maternal mortality, presence of field-based NGOs, and adequate population size to satisfy sample requirements. Sylhet division has the highest rates of neonatal mortality (63 per 1,000 births) (NIPORT et al., 2005) and maternal mortality ratio (471 per 100,000 live births) in Bangladesh (NIPORT et al., 2003). (Figure 1)

Figure 1: Study area

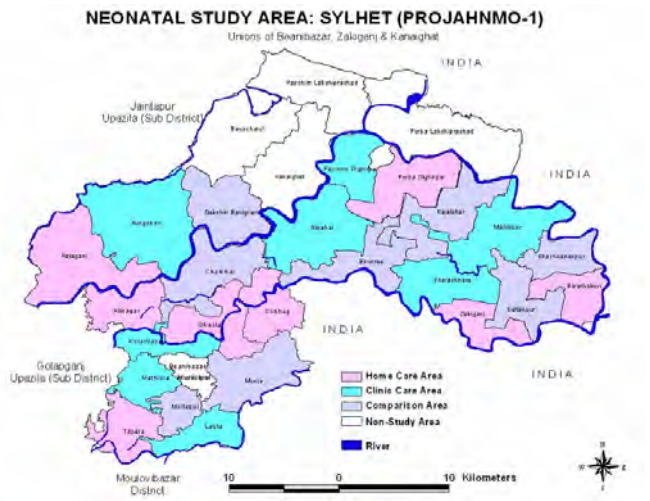

The study was comprised of three arms: home care (HC), community care (CC), and comparison. Individual-level allocation was not feasible, so geographically associated villages known as *unions*, the lowest administrative unit in Bangladesh, were randomized. Twenty-four selected unions of Beanibazar, Zakiganj, and Kanaighat sub-districts were randomly assigned to one of the two intervention arms or to the comparison arm.

The Projahnmo interventions included behavior change communication (BCC) to improve maternal knowledge and practices, promotion of services focusing on birth and newborn care preparedness (BNCP), safe and clean delivery, essential newborn care and management of serious neonatal illness. The project also strengthened maternal and newborn health services in intervention areas.

While the content of the intervention was virtually the same in both the HC and CC arms, the mode of delivery differed. The comparison arm received existing care from government and non-governmental organizations (NGO) health workers and facilities.

Delivery of intervention

In the HC and CC arms, community-based interventions were targeted at multiple levels – community, family, and individual. At the community level, twenty resident community mobilizers (CMs) (12 female and 8 male) conducted group meetings with both men (husbands of pregnant women and heads of households) and women (pregnant and senior family members). These meetings were held at clusters of households or at locations in the community (shops, mosques, etc.). During the group meetings, CMs shared information about maternal and newborn health (as discussed below); they also facilitated role-plays around improved practices. Each CM was responsible for 4000 households and covered 80 households per day. CM supervisors observed groups meetings and provided intensive feedback on these community sessions.

In the HC arm, these group-based meetings were supplemented by one-on-one counseling with pregnant women and their families. Forty resident literate women were trained as community health workers (CHWs). The CHWs conducted pregnancy surveillance in the HC arm on a two-month planning cycle (population 4,000, about 10 pregnancies per month). This catchment area was comparable to the area served by the government family welfare assistant (FWA). Once pregnant women were identified, they were visited twice during pregnancy (at 12 to 16 weeks and at 32 to 36 weeks), at delivery or within 24 hours of delivery, and three times postpartum (Day 1, Day 3, and Day 7). During the visits in pregnancy, CHWs emphasized behavior change communication messages (as discussed below), encouraged women to seek antenatal care at the health center or satellite clinic, and negotiated maternal and newborn care practices with the family. During the postpartum visits, the CHWs assessed the health of mother and baby and encouraged use of postpartum care. CHWs were supervised by 5 field supervisors and by two communication officers.

Content of the intervention

The content of the intervention was informed by review of existing evidence, extensive formative research, and discussions with the Government of Bangladesh, partners, and other stakeholders to ensure relevant, suitable, effective and culturally appropriate activities.

The main focus was birth and newborn care preparedness (BNCP). BNCP is a planning process to assist women and their families in planning for, adopting and maintaining healthy behaviors in pregnancy, delivery, the postpartum period, and for the newborn. In the HC and CC arms, CHWs, CMs, and facility-based health workers focused on the importance of antenatal care (including iron/folate supplementation and TT immunization during pregnancy), facility-based birth with a medically trained provider, postpartum care for the mother and the newborn, and identifying and referring sick newborns. If facility-based birth was not feasible, health workers encouraged selecting a trained traditional birth attendant to assist with delivery using a clean delivery kit. Messages on improving knowledge of danger signs of complications and preparing for emergency transfer to a facility for complications were also emphasized. Emergency transfer included planning for transportation and saving money to pay for admission, medicine and other related costs. Danger signs that necessitated facility-based care included: severe headache; blurred vision; swelling of hands or face; excessive vaginal bleeding; foul smelling discharge; high fever; convulsions; abnormal presentation of the fetus; prolonged labor more than 12 hours; retained placenta; severe lower abdominal pain; cessation of fetal movement; and premature rupture of membranes. Women and families were encouraged to seek immediate medical care at the district level hospital (Upazila Health Complex (UHC)) or higher level health facilities (Sylhet Osmani Medical College Hospital) if these danger signs occurred.

CHWs, CMs, and antenatal care providers promoted the concept of clean home delivery through the use of clean delivery kits. The clean delivery kit contained one clean plastic sheet, a sterile blade, a piece of thread, soap and gauze. In the HC arm, CHWs distributed these kits to pregnant women during pregnancy. In the CC arm, women were able to purchase kits during antenatal care visits. Use of iron/folate during pregnancy was also an important program message. In the HC arm, CHWs distributed iron/folate to pregnant women and encouraged them to take one tablet per day throughout pregnancy. In the CC arm, women were given iron/folate during antenatal care visits.

Projahnmo also strengthened the capacity of existing health facilities in the study area by: (1) training Family Welfare Visitors (FWVs), paramedics and doctors working in the government and NGO sectors, (2) setting up functional logistics and supply systems for obstetric and neonatal care services, (3) strengthening referral services, and (4) involving local and national managers in program review and operations.

Table 1. Summary of Interventions and Delivery Modes

Intervention strategy	Home Care	Community Care
Pregnancy Surveillance	X	
Birth and neonatal care preparedness (BNCP) visits	X	
Community mobilization meeting	X	X
Targeted advocacy meeting	X	X
Clean delivery and identification and referral of emergency obstetric cases	X	X
Newborn care visits, identification and referral of sick newborns and mothers	X	
Improved routine maternal and neonatal health care at health facilities	X	X
Management of maternal and newborn complications at health facilities	X	X
Home management of sepsis if referral fails	X	

Data Sources for Maternal Morbidity sub-study

This study included five components to address the research questions using both qualitative and quantitative data collection methods. The qualitative research was used to understand the meanings of locally-defined causes of maternal morbidity and to inform the development of the quantitative questionnaires.

Qualitative research:

1. Semi-structured interviews with women who have given birth six to twelve months prior to the interview in the study area.

Quantitative research:

2. Household survey with women with a birth two to sixteen weeks prior to the survey in the study area.
   - This survey included measurement of hemoglobin to assess anemia.
3. Facility survey of comprehensive obstetric care facilities to calculate unmet need for the study area.
   - A household survey with women who experienced a life-saving surgery in the 12 months prior to the survey.
4. Verbal autopsy with family members of women who died in the 12 months prior to the survey.

Sample size

The sample size was calculated assuming individual level randomization or a simple random sampling method, and the estimated sample size was multiplied by an appropriate design effect. For this descriptive study, we used a one-sample calculation, with precision of 5% and a 10% refusal rate. A total of 1,536 women were

enrolled in the household survey, or 512 in each study arm. All women with a life-saving surgery in the study area were enrolled (n=64), as well as all women who died an adult female death (n=193).

Procedures

Qualitative research: Twenty-four in-depth semi-structured interviews were conducted with women who had given birth within six to twelve months of the survey in 2005. All women who reported a complication during their last pregnancy were identified from a household survey conducted by Projahnmo. The study area was divided into six strata based on distance from a comprehensive obstetric care facility and four women were randomly selected from each stratum. Interviewees were asked about their most recent birth experience, any complications experienced during pregnancy, childbirth and the postpartum period, care seeking behaviors during each of these phases, and cost of treatments. If the woman reported more than one complication in a given phase of the birthing process, she was asked to select the "most serious". Care seeking behaviors were ascertained for the "most serious" complications within each phase that a given woman had experienced. Based on these qualitative findings, a series of questions was developed to measure each of the three local patterns of care seeking identified.

Quantitative research:

a. Maternal morbidity survey: Women with a recent birth in the study area were identified through a pregnancy surveillance system (June to December 2005). Female interviewers went to each household and identified women who experienced a birth outcome two to sixteen weeks prior to the survey (n=1,586). These women were administered a structured questionnaire to ascertain background information, socioeconomic status, birth history, women's reports of complications, and care seeking behaviors. Women were prompted on 27 complications during each phase of the birthing process (pregnancy, childbirth, and after delivery). They were also asked about specific care seeking behaviors (bringing treatments to the home, bring a provider to the home, going to a health facility or a provider's private office, and referral to other locations/facilities) for perceived complications. If a woman reported more than one complication, she was asked to specify the complication that occurred last. Women were then asked about perceptions of the severity of that condition (not at all serious, slightly serious, serious, or very serious so she thought she might die) and subsequent care seeking behaviors.

Hemoglobin levels were measured using the HemoCue 201+ (HemoCue AB, Ängelholm), with maternal anemia categorized as mild (Hb $\geq$ 11 g/dL and Hb < 12 g/dL) or moderate/severe (Hb<11 g/dL) (UNICEF Bangladesh, 2001). Women with a Hb<11 g/dL were given iron/folate and those less with Hb<7 g/dL were given iron/folate and referred to a facility for treatment, as per the standard of care by the Government of Bangladesh.

Secondary outcomes included preparing for birth (knowledge of danger signs, planning for a birth attendant and location, and planning for transportation and saving money in the case of a complication), using a clean delivery kit, and taking iron/folate during pregnancy.

Only women with a live or stillbirth were included in the final analysis (n=1,490). Women with a miscarriage (n=78) were excluded from the analysis to avoid differentials in pregnancy duration. Data quality was assured through supervision and dual interviewing of 20% of the sample.

b. Facility survey: The facility survey measured the unmet need for life-saving obstetric care in Sylhet district. This concept was developed by DeBrouwere and colleagues to estimate the proportion of women needing life-saving interventions for life-threatening complications who did not have access to appropriate care. Life-saving interventions include: caesarean section; laparotomy for suture of a uterine breech; version and extraction; symphisiotomy; and crainiotomy. Life-threatening complications include: severe antepartum hemorrhage; placenta previa; abruptia; severe postpartum hemorrhage requiring surgery; feto-pelvic disproportion; and shoulder, transverse and brow presentation (De Brouwere & Van Lerberghe, 1996; De Brouwere & Van Lerberghe, 1998).

Comprehensive obstetric care facilities (both public and private) in Sylhet district were identified by project staff (n=31). Two trained medical students collected data on life-saving obstetric surgeries and life-threatening complications conducted in these facilities in 2004. The medical students used a structured data extraction form. Data quality was assured through regular meetings and review of findings by the project coordinator.

c. Household Survey for Women with Life-saving Surgery: Women who received life-saving surgery in the year prior to the survey were identified through a pregnancy surveillance system. Female interviewers went to each household in the study area between October and December 2005 and asked the head of the household if any woman had experienced a Caesarean section or other life-saving surgery in the twelve months prior to the survey. Eligible women (n=64) were interviewed by female interviewers using a structured questionnaire to ascertain background characteristics, socio-economic status, birth history, perceptions of complications, and care seeking behaviors. Women were prompted on 27 specific complications during each phase of the birthing process (pregnancy, childbirth, and after delivery). They were also asked about specific care seeking behaviors (bringing treatments to the home, bring a provider to the home, and going to a health facility or a provider's private office) for complications that prompted them to seek care in a health facility.

Data quality for the household surveys was assured through supervision and dual interviewing of a percentage of the sample.

d. Verbal autopsies for maternal deaths

All households with an adult female death (women aged 12 to 50 years) in the 12 months prior to the survey (January 2005 to January 2006) were enumerated during the household listing for the Projahnmo endline survey. A total of 193 deaths were identified, and family members were administered a verbal autopsy instrument between June and August 2006. The questionnaire was adapted from the Bangladesh Maternal Health and Mortality Survey conducted in 2001 to assure comparability. Data quality was assured through extensive interviewer training, supervision, and dual interviewing of 20% of the sample.

Ethical approval for this study was obtained from the Committee on Human Research at the Johns Hopkins Bloomberg School of Public Health and The Ethical Review Committee at ICDDR,B in Dhaka, Bangladesh. This study is registered as a National Clinical Trial per the International Committee of Medical Journal Editors (ICMJE) initiative, numbers NCT00198705 and NCT00198731. All participants gave informed consent prior to enrollment and participation was voluntary.

Data analysis

Qualitative semi-structured interviews

Notes and audio recordings from the interviews were transcribed and translated from the local language into English. Analysis included several rounds of manual coding of the transcripts and discussions with the research team using the constant comparative method to synthesize the data (Boychuk Duchscher, 2004).

Unmet Need

Results were entered into MicroSoft Excel and analyzed to determine the unmet need for life-saving care in Sylhet district.

Quantitative surveys

Data quality for the three household surveys was assured through supervision and dual interviewing of a sub-sample of respondents. We reviewed the data for accuracy, consistency, and completeness and entered into a database using Visual FoxPro version 9.0 (Microsoft Corp., Redmond, WA, USA). Errors in data collection and entry were identified using range and consistency checks. All analysis was conducted using STATA Version 8.0 (Stata Corp. Inc., College Station, TX).

Descriptive analysis was conducted to assess the distribution of data. Prevalence of self-reported complications was assessed for women in each of the surveys. Bivariate analysis measured associations between covariates and care seeking behaviors using the Pearson's chi-square statistic.

An intent-to-treat analysis was conducted to assess the effect of the HC and CC models in relation to the comparison arm. Pearson's chi-square test was used to test for differences among study arms for primary and secondary outcomes for categorical variables, and t-tests were used for continuous variables. All analyses adjusted for the clustered nature of the data.

Verbal autopsies

Each verbal autopsy was reviewed by two independent physicians and cause of death was assigned based on ICD-10 codes. In case of disagreement, a third physician reviewed the case. A fourth physician reviewed the causes of death assigned by the two (or three) reviewers and assigned a final cause of death.

Measures

a) Wealth index

Principle component analysis based on the ownership of household durable goods and condition of the house was used to construct the wealth index score. The standardized first principal component of the variance-covariance matrix of the observed household assets was used to develop weights for each variable. Based on these weights, an asset index was created, and households were ranked based on the total score on the asset index and divided into quintiles from lowest to highest. For women with life-saving surgery, the data were combined with women from the maternal morbidity survey to ensure comparable results.

b) Knowledge of danger signs

Women were asked to spontaneously cite knowledge of danger signs in pregnancy, delivery, and the postpartum periods. During pregnancy, danger signs included: severe headache; blurry vision; stopping of fetal movement; high blood pressure; swelling of face; swelling of hands; convulsion; excessive vaginal bleeding; severe lower abdominal pain; swelling of legs; high fever; and premature rupture of membranes. In childbirth, excessive vaginal bleeding, foul smelling vaginal discharge, high fever, arm or leg prolapsed, abnormal position, prolonged labor, retained placenta, torn uterus, prolapsed cord, cord wrapped around baby's neck, and convulsion were included. During the postpartum, danger signs included excessive vaginal bleeding, foul smelling discharge, high fever, inverted nipples, tetanus, retained placenta, severe abdominal pain, convulsion, and breast infection. The mean number of danger signs cited during pregnancy, delivery, after delivery, and for all phases were calculated.

c) Birth preparedness

Women were asked if they prepared for delivery, and if yes, to spontaneously cite the types of preparations. Responses included: selecting a delivery site, selecting a delivery assistant, and arranging for transportation and saving money in the case of an emergency. All responses were unprompted.

d) Clean delivery kits

Women were also asked if they owned a clean delivery kit, and if yes, to name what parts of the kit were used during delivery. These items included: using a plastic sheet to cover the delivery surface, having the traditional birth attendant use the soap to wash her hands prior to delivery, using the clean blade to cut the cord, and the boiled thread to tie to cord. All responses were unprompted.

e) Iron/folate

Women were asked it they took iron tablets during pregnancy, and if yes, how many tablets were taken per day for how many days. Taking at least one iron tablet per day for at least 90 days was considered correct iron use (UNICEF Bangladesh, 2001).

V. Results

Qualitative semi-structured interviews

All women were currently married with a mean age of 26 years and an average of 3 children. Years of schooling varied from 0 to 12 years, with more than half of women (58%) having no schooling. Twenty of the women gave birth at home (83%), while four of the women gave birth in a health facility (17%).

In the interviews, women were asked about all health problems experienced during pregnancy, childbirth, and in the first 40 days postpartum. Of the 90 problems reported, 50% occurred during pregnancy, 13% occurred during childbirth, and 36% took place during the postpartum period. If more than one complication was stated, women were asked to identify the "most serious" complication in each phase. A total of 61 serious complications were reported, and care was sought for 55 of these conditions (90%). These problems were diverse and ranged the continuum of severity. Women reported lower abdominal pain, fever, and body ache during pregnancy; prolonged labor and uterus prolapse during childbirth; and fever, bleeding, and swollen legs during the postpartum period. Thirty-two (58%) complications were first addressed by bringing a health care provider at home and 23 (42%) were first addressed by seeking care outside of the home. Care was sought at multiple places for 22 (40%) of the complications, and women tended to consult doctors and pharmacy shops if the problem persisted (Figure 2).

Figure 2: Care seeking patterns for "serious" complications, by first type of care sought, Sylhet District, Bangladesh, 2005 (n=55)

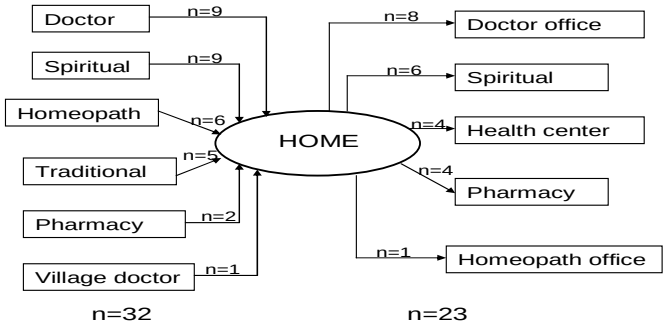

Four distinct care seeking patterns emerged from the interviews: 1) receiving traditional remedies available in or around the home, 2) sending a family member to purchase treatment to be administered in the home, 3) bringing a health provider into the home to administer treatment, and 4) care provided by health workers outside the home in a health facility or a provider's office/home.

Care seeking patterns

a) No care seeking

Of the 61 serious maternal health problems reported, six women did not seek any care. The majority of these women (n=5) reported fever in the 40 days after delivery and didn't seek care due to the local perception that postpartum *Taap* [fever] is "normal" and "helps to produce breast milk."

The other reason why women did not seek care was lack of financial resources. One woman who experienced uterus prolapse stated:

"[my uterus] it looks like an egg . . . I could not walk fast and also work fast. I put a piece of cloth inside the mouth of the vagina to set uterus inside, but it is so difficult. . . for ten months I am suffering from this . . . I could not afford my meal daily so how could I afford treatment at a facility." (5 children, far from health facility)

Local understandings of illness causation and economic constraints may be barriers to care seeking either inside or outside the household. These barriers have been noted in other studies in Bangladesh (Blanchet, 1984; Goodburn et al., 1995; Afsana & Rashid, 2000).

b) Care at home

More than half of families sought care within their own homes (58%) by using traditional remedies available in or around the home, bringing treatment/medicine to the home, or by bringing a provider to the home. Treatments varied by type of complication and type of provider.

b.1) Traditional care:

Five women reported seeking traditional care at home. One woman with *booke jolto, gola jolto* [a burning sensation in her chest and throat] ate *panta bhaat* which is boiled rice soaked in fresh water and preserved for a future meal (4 children, near health facility). Another woman with *matha bedna* [headache] poured cold water with mustard oil on her head to alleviate the pain (3 children, near health facility). A third woman reported a vaginal infection during pregnancy. She stated:

"Always water/fluid came out from that place [vagina]. . . . that place [vagina] was infected and looked like rotten place . . . . so it was painful for me. I did not seek care from anyone for this serious health problem . . . I felt shy to describe this problem to male doctor. My mother suggested me to wash that place regularly with dettol." (3 children, near health facility)

Even though these women lived relatively close to a health facility, they preferred to seek care at home. In this environment, women have control over the type of treatment, its cost, and do not need to discuss sensitive issues with male providers or male family members.

b.2) Treatment at home:

The most prevalent pattern of care seeking was administering treatment/medicine at home. Typically, a male family member was sent to a provider in the informal or formal health sector, described the woman's symptoms,

and purchased medicine or treatment. The treatments varied depending on the provider and included amulets to protect the woman from evil spirits, herbal remedies, and pharmaceuticals. By administering these treatments at home, families had control over the type and cost of treatment. The median cost of the treatments given in the home was 55 Taka (about US$1– including medicine, transportation, and provider fees). These treatments were usually sought from providers close to the home, thus decreasing or eliminating transportation costs, and families often purchased only partial medications based on their ability to pay.

One woman suffered from prolapsed uterus after delivery, so her husband visited a homeopathic doctor. The woman stated:
"My husband is very much religious person and as well as stubborn. He has no money so that he cannot provide me any treatment and take me to any pass kora doctor [medically trained doctor] . . . he would not allow me to go to male doctor for treatment . . . so he was not bothered by my sickness." (5 children, near health facility)

A second woman suffered from fever postpartum. She reported that she was cold and had body pain because of the fever. She stated:
"I did not go to any doctor, my husband went to pharmacy and discuss with him regarding my health problem. Then he gave my husband some medicine. He bought 10 to 20 Taka [US$0.15 to US$0.30] of medicine. I took this medicine only 3 to 4 days. Then I was cured." (4 children, near health facility)

By purchasing treatment at the pharmacy, her husband was in control of how much medicine to purchase and the overall cost of treatment. Even though the woman only took the medicine for 3 to 4 days, she was cured, at a lower cost.

For many women, family members sought care from medically trained providers and administered treatment in the home. One woman with pain in her abdomen after delivery stated:
"It was so painful that I could not bear that along with this I felt so weak. . . At tenth day after delivery me nephew went to Rowshon Ara [medically trained doctor] and described my problems. Then she prescribed few medicines and then my nephew purchase that medicine from medicine shop. . . My sister-in-law and also brother-in-law and dai [traditional birth attendant] also insisted them to go." (3 children, near health facility)

By sending male family members to the medically trained doctor, this woman received some of the putative benefits of medical care without leaving her home.

Another woman who reported bleeding 20 to 25 days after delivery also sought care from a medically trained provider without leaving her home. She explained:
"*During that time I felt that my head was spinning and I could not see things well. . . Actually I was waiting for 20 days to see if the bleeding was decreased or not. . . I told my brother about my problem and requested him to bring some medicine from Kalipada doctor [medical officer]. After that my brother brought some medicine*

from Kalipada doctor. . . My husband was at home during that time. But he does not understand this kind of things." (1 child, near health facility)

Women perceive bleeding postpartum to be cleansing and will often not seek care until the problem is very serious (Blanchet 1984; Goodburn et al., 1995; Afsana & Rashid, 2000). Due to her weakness, this woman was able to receive care from a medically trained provider without leaving her home.

b.3) Health provider at home:

Few women reported receiving care from a health provider in the home. A spiritual leader helped one woman with bleeding during pregnancy, while a pharmacy doctor helped another woman with prolonged labor. The other three women reported that a medically trained doctor came to their home to help with their problems. In this study, providers were often brought to the home if the condition was perceived to be serious and if women were unable to easily travel to a health facility. For example, one woman was so weak after giving birth and was having trouble eating, so her father brought a medically trained doctor to the home to examine her.

"My father brought her to the home [medically trained doctor]. I was not able to even eat food, so my father thought that if the doctor prescribed the medicine and after the medicine I might be able to eat food and then I got energy in my body." (0 children, far from health facility)

By receiving care at home, women are able to limit social and economic costs, and be less of a burden on their families. Seeking care outside the home requires the husband's permission, as well as another family member to accompany the woman to the facility. If the condition is serious, it is preferable to remain at home to avoid transport and waiting time in facilities.

c) Care outside home

A little less than half of the women (42%) sought care outside of the household from providers in the informal or formal health sector. Seeking care outside the home was influenced by the type of illness, reputation of the provider, the woman's previous experiences, and the family's ability to pay. Care outside the home was significantly more expensive than inside the home, and included additional costs for treatment and transport. The median cost was 700 Taka (about US$11 including provider fees, medication, and transportation costs).

One woman said:

"*Everyone in this community used to go to Rowshon ara [medically trained doctor] for pregnancy and delivery. She is good doctor and can identify disease properly. If the patient is not capable to go to the hospital then she comes to patient's house and also if she could not come for any reason, then she sends a nurse. . . No other doctor does these things like her*." (3 children, near health facility)

d) Care at home and outside home

Some women sought care both inside and outside the home. One woman with diarrhea, dizziness, and lower abdominal pain during pregnancy reported that her husband went to the pharmacy shop to get her medicine, and she also visited this same shop three times. Reputation of the pharmacy doctor and closeness of the shop to the home influenced these care seeking behaviors.

"*Due to diarrhea my husband went to shop and bought medicine . . . the pharmacy shop is near to Indian border. As we know him as a good doctor, we went to his shop. We had known each other for years." I also went to pharmacy shop 3 times for my treatment. . . . My husband knew him and gave me permission to go over there alone. Every one is busy with his or her own work, so I didn't disturb anyone. Another thing is Pharmacy is not far from my home so I can easily go there alone*." (7 children, near health facility)

e) Case study

Care seeking patterns varied depending on the perceived severity of the complication, access to informal and formal providers, ability to pay, reputation of the provider, and social factors. We will discuss two case studies which illustrate the dynamics of care seeking both inside and outside the household.

Fatima

Fatima is 30 to 35 years old, lives in a more remote part of the study area, and has no education. She has been pregnant 7 times and has 4 living children. Her last delivery was at home with a *dhonni/dhoroni* (traditional birth attendant [TBA]). During pregnancy, she suffered from *amasha* [dysentery]. Her husband first consulted a *moulana* [spiritual healer] who prescribed an amulet to protect Fatima from *upri* [literally wind /spirits "from above"]. When the dysentery persisted, her husband brought a pharmacy doctor to the home to administer intravenous saline. Finally, Fatima's husband accompanied her to a pharmacy (a relative) for further treatment, and the condition was cured.

During childbirth, Fatima reported *kacha rocoto* [raw blood discharge] three days before delivery, and after the baby was born, her *chal* [uterus], *auda* [placenta], and *nari vuri* [intestinal coil] came out together. Once the placenta was delivered, the *dhonni* [TBA] told Fatima's husband to bring medicine from the "doctor." Her husband went to the pharmacy (the same one used to treat the dysentery) to purchase medicine. The *dhonni* replaced the uterus and intestinal coil, and the medicine helped with the pain. Fatima didn't report any specific problems during the postpartum period.

Ayesha

Ayesha is 27 years old, lives in the central part of the study area, closer to the main road and to health facilities, and has eight years of education. Her husband works in the Middle East, and she returned to her natal home for childbirth. This was her first pregnancy, and she gave birth at a private clinic in the town of Sylhet.

During pregnancy, Ayesha went to the health facility for regular antenatal care check-ups. At seven months of pregnancy, she reported *pete bedna* [strong pain in her abdomen] and was taken to the government health

facility where she was referred to a private clinic. Ayesha was examined by a female doctor and given saline and an injection. The next morning, the doctor suggested a Caesarean section because Ayesha was seven months pregnant, but Ayesha and her family refused.

Ayesha's child was overdue. Her sister went to the government health facility and was told to wait two more days. After two days, the doctor suggested going to a private clinic where Ayesha received saline and an injection from a female physician. When labor did not start, a Caesarean section was performed. Ayesha had no problems during the postpartum period.

Ayesha's story is very different from Fatima's story, as Ayesha and her family sought care exclusively outside the home. These preferences for care seeking are shaped by Ayesha's ability to pay (the caesarian section cost 35,000 Taka or about US$537), her personal experiences (her sister had previously died during childbirth), it was her first pregnancy, and she was staying in her natal home. Ayesha also had eight years of education, which may have facilitated her ability to decide to forgo the recommended caesarean section at seven months gestation. The family had the economic means to go to a private clinic with good quality of care and a female doctor.

From these findings, it was evident that "care seeking" is perceived as being comprised of four distinct patterns. In the quantitative surveys, we developed a series of questions to capture all patterns of perceived care seeking. In addition, we used local terms to describe complications/morbidities in these quantitative instruments.

Quantitative findings

Unmet Need

Seventy-seven percent of women in Sylhet district did NOT receive appropriate life-saving care for life-threatening complications in 2004 (unmet need). For the 23% of women who received care (met need), care was mostly performed in the private sector (80%), followed by 16% in the government sector and 4% in the NGO sector. In the government sector, the majority of life-saving surgeries were conducted in Sylhet Osmani Medical College (94%).

Verbal Autopsy

Of the 193 adult female deaths, a total of 44 were classified as maternal deaths (22.8%) with an additional 3.1% from accidents, homicides and suicide. Sixty-seven percent of the deaths were non-maternal, while 7.2% had an unspecified cause of death. Of the maternal deaths, the majority were due to hemorrhage (APH/PPH; 36.4%). The remaining causes of maternal deaths were infection/sepsis (20.4%), pre-eclampsia/eclampsia (18.2%), prolonged/obstructed labor (4.5%) and septic abortion (4.5%). Seven percent of the deaths were due to indirect maternal causes (heart failure and stroke), with 4.5% from an unspecified maternal cause, and 2.3% from an other direct cause (DIC).

Background characteristics – all surveys

Background characteristics of the sample are provided in Table 2.

Table 2: Background characteristics of women in the maternal morbidity survey, the women with life-saving surgery survey, and maternal deaths by selected characteristics, Sylhet, Bangladesh, 2005-2006

Characteristic	Maternal morbidity survey (N=1,490)		Women with life-saving surgery (N=64)		Maternal deaths (N=44)	
	%	n	%	n	%	n
Woman's education						
None	36.6	545	14.1	9	40.9	18
Primary	36.6	546	23.4	15	34.1	15
Secondary +	26.8	399	62.5	40	25.0	11
Age[1]						
15-19	6.3	94	1.6	1	9.1	4
20-24	30.1	449	31.3	20	15.9	7
25-29	30.9	461	31.2	20	25.0	11
30-34	22.3	332	25.0	16	22.7	10
35-39	8.5	126	9.4	6	22.7	10
40 +	1.9	28	1.6	1	4.5	2
Religion						
Islam	96.0	1,430	95.3	61	NA	NA
Hindu	4.0	60	4.7	3	NA	NA
Parity						
0-1	19.1	284	45.3	29	15.9	7
2-3	35.3	526	39.1	25	27.3	12
4-5	26.0	388	10.9	7	29.5	13
6 or more	19.6	292	4.7	3	18.2	8
Don't know					9.1	4
Previous complication	33.1	997	NA	NA	9.1	4
Previous pregnancy loss	23.9	356	39.1	25	25.0	11
Previous death to child	30.6	456	15.6	10	NA	NA
Husband's education						
None	40.2	599	12.7	8	38.6	17
Primary	36.4	542	30.2	19	22.7	10
Secondary +	23.4	349	57.1	36	31.8	14
Don't know					6.8	3
Wealth quintile[2]						
Lowest	20.0	298	3.1	2	NA	NA
Second	20.1	300	1.6	1	NA	NA
Middle	19.9	296	12.5	8	NA	NA
Fourth	20.0	298	20.3	13	NA	NA
Highest	20.0	298	62.5	40	NA	NA
No. ANC visits[3]						
0	75.3	1,122	14.1	9	NA	NA
1+	24.7	368	86.0	55	NA	NA
Attendant at birth						
Untrained	89.1	1,328	0.0	0	NA	NA
Medically trained[4]	10.9	162	100.0	64	NA	NA
Location of birth						
Non-facility	90.9	1,354	20.3	13	NA	NA
Facility	9.1	136	25.0	16	NA	NA
Other	NA	NA	54.7	35		
No. PP care visits[3]						
0	86.2	1,284	0.0	0	NA	NA
1+	13.8	206	100.0	64	NA	NA
Sub-district						
Beanibazar	33.49	499	53.1	34	13.6	6
Zakiganj	43.4	645	29.7	19	65.9	29
Kanaighat	23.2	346	17.2	11	20.4	9
Study Arm						
Home Care	33.8	503	39.1	25	34.1	15
Community Care	32.8	489	28.1	18	31.8	14
Comparison	33.4	498	32.8	21	34.1	15
TOTAL	100.0	1,490	100.0	64	100.0	44

Notes:
1. Age for maternal deaths, first category is 13 to 19 years.
2. Wealth quintiles for women with life-saving surgery by combining these women with the women in the maternal morbidity survey (n=1554) to more accurately display differences among these women.
3. Only includes care wi h medically trained providers. Medically trained provider Includes: doctor; nurse/midwife; paramedic; medical officer; female welfare visitor
4. Medically trained provider Includes: doctor; nurse/midwife; paramedic; medical officer; female welfare visitor

a) Maternal morbidity survey

Of the 1,490 women, one third of the women had no education (36.6%), while 26.8% had secondary or higher education. Women's husbands were less educated, with 40.2% of husbands having no education. Almost all women practiced Islam (96.0%). One-third of the women had experienced a previous complication during pregnancy and/or delivery (33.1%), and had a previous child die (30.6%). Few women gave birth in a facility for their most recent delivery (9.1%).

b) Women with life-saving surgery survey

Of the 64 women with life-saving surgery, two thirds had secondary or higher education, while 23% had primary education. Women's husband's were also well educated; 57% had secondary or higher education with only 13% with no education. Almost all women were Muslim (95%) and the majority had between zero and three births. Thirty-nine percent reported a previous pregnancy loss. These women had higher wealth status compared with women in the maternal morbidity survey. The majority (62%) were from the highest wealth quintile, with only 3% were from the lowest wealth quintile.

c) Verbal autopsies

Of the 193 women interviewed, 44 were classified as maternal deaths. Forty-one percent of these women had no education. The education level of women's husbands was similar with 39% having no education and 32% having secondary education or higher. Nine percent of women reported a previous complication, and 25% reported a previous pregnancy loss. Women tended to have two to five births.

Primary Objective: Prevalence of self-reported morbidities and care seeking behaviors

a) Maternal morbidity survey

Of the 1,490 respondents, 886 reported at least one complication during pregnancy, childbirth, or after delivery (59.5%). Nineteen percent of women reported one complication, while 81% reported more than one complication. Women with more than one complication were asked which complication occurred last. Eleven percent of women reported a pregnancy-related complication, 15.6% reported a complication during delivery, and 72.8% reported a complication after delivery. The most commonly cited complications in all phases of the birthing process were symptoms of pre-eclampsia or eclampsia (14.0%), complications of labor and delivery (8.5%), symptoms of sepsis (6.7%), bleeding (5.6%), and other (44.5%). Of these complications, 86.8% of women reported that the complication was serious or very serious, while 13.2% reported that the complication was not at all serious or slightly serious. Perceived severity varied based on the complication. Eighty percent of women with reported symptoms of pre-eclampsia or eclampsia perceived the complication to be serious, 94.0% of women with bleeding perceived the complication to be serious, while 75.9% of women with reported leg

problems perceived the complication to be serious. Women with perceived serious or very serious complications (n=769) were included in the final analysis. (Table 3)

Of the 769 women with "serious" complications, 85.7% reported seeking some type of treatment or care, with 28.2% seeking multiple sources of care. The most predominant pattern of care seeking was bringing medicine or treatment to the home (67.7%). These treatments included tablet or capsule (65.6%) followed by homeopathic treatments (10.0%) and saline injections (9.8%). Three percent of women reported receiving an intramuscular injection to increase labor, and 2.5% reported receiving treatments of a spiritual nature (spiritual water or oil). Twenty percent of women reported that a provider came to the home to provide care. Thirty-six percent of women reported receiving care at home from a village doctor, 28.6% reported receiving care from a traditional birth attendant, and 16.3% of women reported receiving care from a medically trained provider.[7]

One third of women reported seeking care outside the home (30.3%). Of these women, 28.7% went to the home of a medically trained provider, and 27.5% went to a district level hospital. Overall, 26.2% of women reported seeking care from a medically trained provider.

Patterns of care seeking varied by type of complication. For women with symptoms of eclampsia[8], half brought treatment to the home (50.5%), 42.4% sought care outside the home, and 35.3% sought care from a medically trained provider. Three-fourths of women with bleeding brought treatment to the home (70.2%), while only 40.0% of women with lower abdominal pain brought treatment to the home. Seventy-seven percent of women with prolonged labor[9] brought treatment to the home, while only 40.9% sought care form a medically trained provider. (Table 3)

[7] A medically trained provider includes doctor, paramedic, nurse, midwife, and family welfare visitor.
[8] Includes at least one of the symptoms: severe headache; blurred vision; high blood pressure; swelling of hand; puffy face; convulsion; vertigo.
[9] Self-reported labor more than 12 hours.

Table 3: Percent of recently delivered women who reported complications, perceived "serious" complications, and types of care seeking among women with perceived "serious" complications, by type of complication, Sylhet district, Bangladesh[1], 2005

Reported complication	All women (n=886)	Perceived serious (n=886)	Total	Brought treatment to home	Brought provider to home	Sought care outside home	Sought care from medically trained provider[2] (inside or outside)	Total
Symptoms of eclampsia[3]	14.0	79.8	124	50.5	19.2	42.4	35.3	99
Labor & delivery[4]	8.5	89.3	75	62.7	67.2	40.3	41.8	67
Sepsis[5]	6.7	91.8	61	71.4	17.9	23.2	21.4	56
Bleeding	5.6	94.0	50	70.2	27.7	27.7	29.8	47
Postpartum pain/ Cramping pain	3.7	100.0	33	90.9	3.0	3.0	3.0	33
Leg problems	1.4	75.9	83	47.6	9.5	55.6	36.5	63
Prolonged/obstructed labor	2.6	95.6	23	77.3	59.1	54.5	40.9	22
Loss of consciousness	1.8	100.0	16	62.5	62.5	18.7	37.5	16
Lower abdominal pain	2.0	94.4	18	64.7	11.8	70.6	35.3	17
Retained placenta	0.6	100.0	5	40.0	60.0	20.0	20.0	5
Gastrointestinal problems[6]	0.3	66.7	3	50.0	0.0	50.0	0.0	2
Urinary tract infection[7]	0.1	0.0	1	NA	NA	NA	NA	0
Other	44.5	86.8	394	74.6	9.1	21.3	19.0	342
TOTAL	100.0	86.8	886	67.7	19.9	30.3	26.0	769

Notes:
1. Cell percentages for care seeking behaviors.
2. Includes doctor, nurse/midwife, paramedic, medical officer, female welfare visitor
3. Includes severe headache; blurred vision; high blood pressure; swelling of hand; puffy face; convulsion; vertigo
4. Includes hand or leg prolapsed; irregular labor pain
5. Includes foul smelling discharge; high fever
6. Includes gastri is; oral thrush; abdominal pain; severe abdominal pain; hyperemesis
7. UTI includes: pain in urination; stop urination; urine infection; excess urination

b) Women with life-saving surgery survey

Sixty-four women received life-saving surgery (caesarean section) in the Projahnmo study area in the year prior to the survey. Indications for caesarean section included overdue delivery (40.6%), prolonged labor (18.7%), previous caesarean section (18.7%), discharge of water (7.8%) and convulsion (6.2%).

Women reported a variety of complications. More than half of the women reported symptoms of eclampsia (67%). Other reported complications included leg problems (42%), symptoms of prolonged/obstructed labor (28%), and complications of labor and delivery (11%). Only 8% of women reported bleeding. Prior to the caesarean section, 22% of women received spiritual treatments in the home and 36% brought a traditional birth attendant to the home. The majority of women ultimately sought care at a private clinic (59%), with 28% going to a Medical College Hospital. Only 6.3% sought care at a government facility.

Secondary objective: Maternal behaviors and morbidity by study arm:

a) Maternal morbidity survey

Background characteristics were comparable across study arms in the Projahnmo baseline and maternal morbidity surveys (Table 4).

Table 4: Distribution of selected characteristics of study women at Projahnmo baseline (n=5,684) and maternal morbidity survey, Sylhet, Bangladesh, 2005 (n=1,490)[1]

Characteristics	Baseline				Maternal Morbidity Survey			
	HC	CC	Comp	chi-square p-value	HC	CC	Comp	chi-square p-value
	n=1,765	n=1,959	n=1,960		n=503	n=489	n=498	
Background								
Woman's education				0.881				0.519
None	49.5	51.5	48.3		36.4	38.6	34.7	
Primary	27.9	26.9	28.7		38.0	33.1	38.8	
Secondary+	22.6	21.6	23.0		25.6	28.2	26.5	
Woman's age				0.611				0.304
15-19	4.2	4.5	5.8		8.3	4.9	5.6	
20-24	25.3	24.9	23.7		31.2	28.4	30.7	
25-29	31.7	30.0	31.0		29.0	33.7	30.1	
30-34	22.9	22.2	21.8		20.7	22.3	23.9	
35-39	11.8	13.9	13.3		9.3	9.2	6.8	
40+	4.1	4.7	4.4		1.4	1.4	2.8	
Religion				0.748				0.486
Islam	96.2	94.9	94.9		95.6	95.1	97.2	
Hindu	3.8	5.1	5.1		4.4	4.9	2.8	
Parity				0.790				0.733
0-1	19.9	19.9	21.1		18.9	19.6	18.7	
2-3	33.9	34.1	32.3		34.2	36.2	35.5	
4-5	24.7	24.0	24.0		25.2	26.0	26.9	
6 or more					21.7	18.2	18.9	
Husband's education				0.919				
None	52.0	51.9	51.0		41.9	40.1	38.5	0.828
Primary	28.6	30.1	30.3		35.8	35.0	38.3	
Secondary+	19.4	18.0	18.7		22.3	24.9	23.1	
Wealth quintile				0.923				0.860
Lowest	18.6	21.8	22.3		17.5	23.1	20.1	
Second	21.1	20.7	20.9		21.5	18.2	18.9	
Middle	20.0	19.5	19.3		20.9	19.2	19.3	
Fourth	20.1	18.5	20.2		21.1	19.8	20.3	
Highest	20.3	19.4	17.3		19.1	19.6	21.5	

Notes:
All column percentages

a.1) Care seeking

In both intervention arms, women reported contact with community workers during pregnancy (97% in HC and 46% in CC), with an average of 2.8 and 0.8 visits respectively (data not shown). In the maternal morbidity survey, there were some differences in knowledge and practices across study arms. Women in the home care and community care arms spontaneously cited more danger signs, on average, than those in the comparison arm. For all phases of the birthing process, 98% of women in HC and 92% of women in CC cited at least one danger sign, citing 5.1 (SD=2.2) and 4.4 (SD=2.6) on average respectively. Women in the HC arm cited significantly more danger signs than women in the comparison arm (mean=4.4, SD=2.5; p-value=0.000).

Clean delivery practices were also significantly higher in the HC and CC arms, compared with the comparison arm. In HC and CC arms, 88% and 27% of women respectively reported having a clean delivery kit at home prior to delivery, while only 4% had this kit in the comparison arm (HC vs comparison, p<0.001; CC vs

comparison, p<0.001). Women were also more likely to report using the clean delivery kit in the HC arm, with 25% of women using the plastic sheet for delivery, 26% using soap for the traditional birth attendant to wash her hands, 26% using the boiled thread to tie the cord, and 26% using the clean blade to cut the cord. In the comparison arm, 0.7% of women used the plastic sheet for delivery (p<0.001), 0.9% used the soap for the TBA to wash her hands (p<0.001), 1% used the thread to tie the cord (p<0.001) and 1% used the blade to cut the cord (p<0.001). In the HC arm, women were also more likely to report taking iron tablets during pregnancy. Three-fifths of women (62%) reported taking at least on iron tablet per day for 90 days of pregnancy in the HC arm, compared with 29% of women in the CC arm, and 12% of women in the comparison arm (p=0.000; p=0.004).

Birth preparedness behaviors did not differ significantly across the study arms. Three quarters of women in the HC arm reported preparing for delivery (72%), while half of women reported preparing for delivery in the CC and comparison arms (54% and 53% respectively). Women reported choosing a delivery assistant (21%, 14%, and 14% respectively) and arranging money in case of complication (6%, 5% and 3% respectively). These differences were not significantly different among the study arms. (Table 5)

Table 5: Percent of women with knowledge and practices by study arm, Sylhet, Bangladesh, 2005[1] (n=1,490)

Knowledge and Practices[2]	**HC**	**CC**	**Comp**	**chi-square p-value**	**chi-square p-value**
	n=503	n=489	n=498	[HC vs Comp]	[CC vs Comp]
Knowledge					
Knowledge of danger signs					
Pregnancy[3]				0.369	0.518
0 signs	10.9	20.2	16.1		
1 sign	15.3	21.5	18.0		
2 signs	38.6	31.1	38.5		
3 or more signs	35.2	27.2	27.3		
Mean (SD)[4]	2.1 (1.21)	1.8 (1.27)	1.9 (1.28)	0.005	0.060
Delivery[5]					
0 signs	12.1	20.6	22.1	0.060	0.883
1 sign	39.2	40.0	40.6		
2 or more signs	48.7	39.5	37.3		
Mean (SD)[4]	1.5 (0.92)	1.3 (1.0)	1.3 (0.94)	0.000	0.205
Postpartum[6]				0.237	0.590
0 signs	8.5	17.4	13.6		
1 sign	48.7	49.1	53.2		
2 or more signs	42.7	33.5	33.1		
Mean (SD)[4]	1.4 (0.80)	1.3 (0.89)	1.3 (0.78)	0.000	0.928
All phases				0.045	0.488
0 signs	2.0	7.7	6.4		
1-3 signs	18.9	32.5	27.1		
4-5 signs	37.8	28.0	34.7		
6 or more signs	41.3	31.7	31.7		
Mean (SD)[4]	5.1 (2.23)	4.4 (2.61)	4.4 (2.47)	0.000	0.666
Practices					
Birth preparedness					
Prepared for delivery	72.0	54.2	52.8	0.086	0.871
Birth preparedness actions taken (unprompted)					

Knowledge and Practices[2]	HC	CC	Comp	chi-square p-value	chi-square p-value
	n=503	n=489	n=498	[HC vs Comp]	[CC vs Comp]
Chose delivery site	3.6	5.2	4.3	0.205	0.798
Chose delivery assistant	20.9	14.2	14.4	0.155	0.863
Arrange transportation	0.8	0.7	0.2	0.082	0.505
Arrange money	6.3	4.7	3.1	0.107	0.481
Clean delivery kit					
Woman had a clean delivery kit	87.7	26.8	4.0	0.000	0.000
Clean delivery practices used (unprompted)					
Plastic sheet for delivery	24.6	6.7	0.7	0.000	0.000
Soap for TBA to wash hands	25.8	7.0	0.9	0.000	0.000
Blade to cut cord	26.3	7.1	1.1	0.000	0.000
Thread to tie cord	26.2	7.0	1.0	0.000	0.000
Iron/folate					
Took at least one iron tablet per day for at least 90 days	61.6	29.3	12.0	0.000	0.004

Notes:
1. Column percentages for knowledge of danger signs, planning for birth, owning a clean delivery kit and taking iron/folate; cell percentages for birth preparedness actions taken and clean delivery practices taken.
2. Danger signs, birth preparedness actions taken, and clean delivery practices unprompted; questions were multiple response and all responses were spontaneously mentioned.
3. Pregnancy danger signs include: severe headache, blurry vision, fetal movement stopped, high blood pressure, swelling of face, swelling or hands, convulsion, excessive vaginal bleeding, severe lower abdominal pain, swelling of legs, high fever, premature rupture of membranes (range: 0-7).
4. ttest for differences between means
5. Delivery danger signs include: excessive vaginal bleeding, foul smelling discharge, high fever, arm or leg prolapsed, abnormal position, prolonged labor, retained placenta, torn uterus, prolapsed cord, cord strangles baby, convulsion (range: 0-5).
6. Postpartum danger signs include: excessive vaginal bleeding, foul smelling discharge, high fever, inverted nipples, tetanus, retained placenta, severe abdominal pain, convulsion, burning of breast (range: 0-5).

There were no significant differences in reporting of perceived complications among the study arms. In the HC arm, 63% of women reported at least one complication, 53% of women reported at least one complication in the CC arm, and 62% of women in the comparison arm reported at least one complication (p=0.958 and p=0.552 respectively). In all study arms, the majority of complications were reported in the postpartum period (46%, 37%, and 47% respectively). Of the 886 women who reported complications, 24% of women in the HC arm, 28% of women in the CC arm, and 23% of women in the comparison arm sought care from a medically trained provider, which was not significant across study arms. (Table 6)

Table 6: Percent of women who reported complications and who sought care from a medically trained provider by study arm, Sylhet, Bangladesh, 2005[1]

	HC	CC	Comp	chi-square p-value [HC vs. Comp]	chi-square p-value [CC vs. Comp]
Complication (n=1490)	n=503	n=489	n=498		
Pregnancy	7.0	8.0	5.8	0.570	0.314
Delivery	9.9	8.4	9.4	0.829	0.641
Postpartum	45.9	37.0	46.8	0.952	0.479
Any phase	62.8	53.4	62.1	0.958	0.552
	n=316	n=261	n=309		
Of women with complication, sought care from medically trained provider[2] (n=886)	24.4	27.6	22.6	0.792	0.425

Notes:
1. Column percentages
2. Medically trained provider includes: doctor; nurse/midwife; family welfare visitor; or paramedic

b) Anemia

Of the 1,490 women in the study, 1,446 women had hemoglobin measures (97%) (44 women refused the test). Hemoglobin levels were similar across the three study arms, with a mean hemoglobin of 10.9 to 11.0 g/dL. One-third of the study women had no anemia (Hb$\geq$12 g/dL) in the HC and comparison arms (35% and 34% respectively), while one quarter of the women had no anemia in the CC arm (26%). In the HC arm, 24% of women had mild anemia and 42% had moderate or severe anemia, while in the CC arm, 29% of women had mild anemia and 45% had moderate or severe anemia. In the comparison arm, 24% of women had mild anemia and 42% had moderate or severe anemia. Anemia levels were not significantly different comparing the HC and comparison arm, but the difference between CC and comparison was significant (p=0.040). (Table 7)

Table 7: Percent of women with anemia by study arm, Sylhet, Bangladesh, 2005 (n=1,446)[1]

Anemia	HC	CC	Comp	chi-square p-value	chi-square p-value
	n=483	n=476	n=487	[HC vs Comp]	[CC vs Comp]
Hemoglobin level (g/dL)					
Mean (SD)[2]	11.0 (1.83)	10.9 (1.70)	11.0 (1.75)	0.831	0.246
Anemia status				0.999	0.040
No anemia (Hb $\geq$ 12)	34.6	26.0	34.5		
Mild anemia (Hb < 12 & Hb $\geq$ 11)	23.6	29.0	23.6		
Moderate or severe anemia (Hb < 11)	41.8	45.0	41.9		

Notes:
1. Column percentages; n=1,446 with Hb reading; 44 women refused Hemoglobin test.
2. ttest to test for differences in mean Hb levels

VI. Policy implications

Perceived maternal morbidity poses a large burden on women in rural Bangladesh. In this cultural context, home-based birth is the norm, and safe motherhood programs aim to ensure that women with potentially life-threatening complications receive care from medically trained providers. The challenge lies in identifying these women. Women's understandings of complications as well as their definitions of care seeking are essential in developing interventions to address care seeking behaviors at multiple levels.

Objective I: Perceptions of morbidity and "care seeking"

In the maternal health literature, care seeking is typically defined as "seeking" care in a health facility offering basic and/or comprehensive care. According to this definition, care seeking in rural Bangladesh is uncommon. In our study, care seeking inside the home was prevalent. Home-based treatments included spiritual water and/or oil, homeopathic medicines, and allopathic medicines provided by an untrained pharmacist or a medically trained doctor. Although home-based care by non-trained providers may not directly cause harm to women in most cases, from a medical perspective, this type of care is of limited utility as it cannot prevent mortality from hemorrhage, eclampsia, obstructed labor, sepsis or complications of abortion, and thus delays effective treatment (Sibley et al*.,* 2004; Starrs, 1997; WHO, 2005).

From the perspective of study participants, there are several advantages to home-based care. First, families have the ability to control costs of treatment. Based on findings from the qualitative semi-structured interviews, the median cost of home-based treatments was significantly lower (US $1) than care received in health facilities and/or provider's offices/homes (US $11). In addition, families were able to purchase only part of the medications, reducing their financial burden. Further, families have control over the type of treatment provided. Some women preferred homeopathic treatments; these medicines are perceived to be weaker and more easily tolerated during pregnancy. This type of treatment is also preferred to treat sick newborns in Sylhet, Bangladesh (Winch et al., 2005).

The findings of this study may be limited in that women were only asked about care seeking for the last complication (if multiple complications were cited). This distinction was chosen based on findings from the qualitative interviews where women were asked to choose the "most serious" complication. Women had difficulty choosing only one "serious" complication – thus, we asked about the last complication in the quantitative surveys. However, almost all women perceived their last complication to be serious or very serious.

These findings have important implications for safe motherhood programs. First, safe motherhood programs work under the assumption that recognition of "serious" complications will prompt care seeking from basic or comprehensive obstetric care facilities (Fronczak et al., 2005; Nachbar et al., 1998; Thaddeus & Maine., 1994; Yassin et al., 2003). In this study, although 87% of women, who reported a complication, reported a "serious" or "very serious" complication, the majority sought care at home. As illustrated in the case of Fatima, families go to great lengths to address these "serious" complications. There must be some perceived benefit for home-based care – reassurance, comfort, attention, and cost – even though such care may increase the risk for mortality from a medical perspective.

The concept of "care seeking" often has been defined in narrow terms in maternal health, with "care" denoting services provided by professionals with appropriate life-saving skills, and "seeking" denoting transfer of the woman from the home to a health facility. Local definitions of care seeking can differ considerably from definitions used by programs, making it difficult both to plan interventions to promote care seeking, and to

accurately measure the impact of these interventions. These definitions need to be incorporated in the design of household surveys to track progress toward achieving the MDG for maternal mortality, and taken into account in the design of interventions to promote care seeking.

Objective II: Maternal behaviors and morbidity across study arms

The results indicate that the Projahnmo intervention was effective at reaching women in the HC and CC arms, with 97% and 46% of women respectively reporting at least one contact with a community worker. Although care seeking from medically trained providers for perceived complications did not differ significantly across study arms, there was an effect of the intervention on knowledge of danger signs, using a clean delivery kit, and taking iron during pregnancy. Anemia rates did not differ significantly between HC and comparison arms, but there was a significant difference between the CC and comparison group.

Although three-quarters of women reported preparing for birth in the HC arm and half of women reported preparing for birth in the CC and comparison arms, few women mentioned specific birth preparedness actions taken. This may be a methodological limitation of the study since these questions were unprompted, and therefore, women may have prepared for birth but didn't remember the specific actions taken. Moreover, birth preparedness actions require complex behaviors. Unlike knowledge of danger signs, using a clean delivery kit, and taking iron/folate during pregnancy which are within the control of the woman, birth preparedness behaviors involve input and approval of the woman's family. In Bangladesh, where women have limited decision-making power and mobility outside the household (Das Gupta, 1995; Van Hollen, 2003), these types of behaviors may require more intensive interventions at the family and community levels.

Use of iron/folate was significantly higher in the HC arm compared with the comparison arm, but anemia rates were no different. Moreover, anemia rates in the CC arm were significantly higher than in the comparison arm which is difficult to explain. It may be due to baseline anemia levels; one of the limitations of this study is the lack of baseline data on anemia rates in the study area. This finding requires additional research to more fully understand the determinants of anemia in this population.

In the literature, there is much debate on the usefulness of community-based interventions to improve maternal morbidity and mortality. These interventions are effective at decreasing neonatal mortality, but evidence is less clear for maternal outcomes (Bang et al., 2005; Manandhar, 2004). In this study, the community-based interventions had little effect on primary maternal outcomes, but did have some effect on intermediate outcomes. This may have been the result of the emphasis of the project which was to decrease neonatal mortality. Program messages focused on newborn resuscitation, community-based administration of antibiotics, and referring sick newborns to facilities, and messages on maternal health may have been diluted, especially given the workloads of the CMs and CHWs. Since there are few randomized controlled trials that examine demand side factors (Ensor & Cooper, 2004), this study is an important contribution to the literature and to programs that aim to simultaneously improve maternal and neonatal health.

References

AbouZahr C. (2003). Global burden of maternal death and disability. *British Medical Bulletin, 67*, 1-11.

Afsana K, R. S., & Rashid SF. (2000). *Discoursing Birthing Care: Experiences from Bangladesh*. Dhaka, Bangladesh: University Press Limited.

Bang AT, Bang RA, Reddy HM, Deshmukh MD, & Baitule SB. (2005). Reduced incidence of neonatal morbidities: effect of home-based neonatal care in rural Gadchiroli, India. *J Perinatol, 25 Suppl 1*, S51-61.

Bang RA, Bang AT, Reddy MH, Deshmukh MD, Baitule SB, & Filippi V. (2004). Maternal morbidity during labour and the puerperium in rural homes and the need for medical attention: A prospective observational study in Gadchiroli, India. *BJOG, 111*(3), 231-238.

Bangladesh Institute of Research for Promotion of Essential and Reproductive Health and Technologies (BIRPERHT). (1994, October 1994). *Maternal Morbidity Study.* Paper presented at the Dissemination Workshop on Maternal Morbidity Study, Dhaka, Bangladesh.

Baqui A, & Ahmed S. (2004). *Community-based interventions to reduce neonatal mortality in Bangladesh - Projahnmo I*. Baltimore, Dhaka: Johns Hopkins University, ICDDR,B.

Blanchet, T. (1984). *Meanings and Rituals of Birth in Rural Bangladesh*. Dhaka, Bangladesh: United Press Limited.

Boychuk Duchscher JE. (2004). Grounded theory: reflections on the emergence vs. forcing debate. *Journal of Advanced Nursing, 48*(6), 605-612.

Danel I, Ponce de Leon R, & Lazado P. (1996). Validation study of responses to the maternal morbidity module of the 1994 Ecuadorian Reproductive Health Survey, *International Union for the Scientific Study of Population Seminar on innovative approaches to the assessment of reproductive health*. Manila, Philippines.

Das Gupta M. (1995). Life Course Perspectives on Women's Autonomy and Health Outcomes. *American Anthropologist, 97*(3), 481-491.

Datta, K., Sharma, R., Razack, P., Ghosh, T., & Arora, R. (1980). Morbidity Pattern Amongst Rural Pregnant Women in Alwar, Rajistan: A Cohort Study. *Health and Population Perspectives and Issues, 3*(4), 282-292.

De Brouwere V, Laabid A, & Van Lerberghe W. (1996). Estimation des besoins en interventions obstétricales au Maroc. Une appoche fondée sur l'analyse spatiale des deficits. [Estimating needs for obstetric interventions in Morocco. An approach based on the spatial analysis of deficits.]. *Revue d'Epidémiologie et de Santé Publique, 44*, 111-124.

De Brouwere V, & Van Lerberghe W. (1998). *Les besoins obstétricaux non couverts. [Unmet obstetric needs]*. Paris: L'Harmattan.

Demographic and Health Surveys. (2004). Demographic and Health Surveys. Retrieved 26 July 2004, 2004, from www.measuredhs.com

Dieltiens G. (2003). *Final Report: Unmet Obstetric Need (UON) in Bangladesh*.

Elder LK. (2000). *Issues in Programming for Maternal Anemia*. Washington, DC: JSI/MotherCare.

Ensor T, & Cooper S. (2004). Overcoming barriers to health service access: influencing the demand side. *Health Policy and Planning, 19*(2), 69-79.

Filippi V, Ronsmans C, Gandaho T, Graham W, Alihonou E, & Santos P. (2000). Women's reports of severe (near-miss) obstetric complications in Benin. *Studies in Family Planning, 31*(4), 309-324.

Fortney, J., & Smith, J. (2000). Measuring Maternal Morbidity. In M. B. a. T. S. Ravindran (Ed.), *Safe Motherhood Initiatives: Critical Issues*. London: Reproductive Health Matters Special Issue.

Fronczak, N. (1997). *Early Maternal Morbidity and Utilization of Delivery Services by Urban Slum Women of Dhaka, Bangladesh.* Unpublished Dissertation, Johns Hopkins University, School of Hygiene and Public Health, Baltimore, Maryland.

Fronczak N, Antelman G, Moran AC, Caulfield LE, & Baqui AH. (2005). Delivery-related complications and early postpartum morbidity in Dhaka, Bangladesh. *International Journal of Gynecology and Obstetrics, 91,* 271-78.

Goodburn EA, Chowdhury M, Gazi R, Marshall T, Graham W, & Karim F. (1994). *Maternal Morbidity in Rural Bangladesh: An Investigation into the Nature and Determinents of Maternal Morbidity Related to Delivery and the Puerperium*. Dhaka, Bangladesh: BRAC.

Goodburn EA, Gazi AR, & Chowdhury M. (1995). Beliefs and practices regarding delivery and postpartum maternal morbidity in rural Bangladesh. *Stud Fam Plann, 26*(1), 22-32.

Helen Keller Worldwide. (2002). *Bangladesh: Anemia is a severe public health problem in pre-school children and pregnant women in rural Bangladesh* (No. Bulletin No. 10).

Koblinsky M (Ed.). (2003a). *Reducing Maternal Mortality: Learning from Bolivia, China, Egypt, Honduras, Indonesia, Jamaica, and Zimbabwe*. Washington, DC: World Bank.

Koblinsky M. (2003b). *Behavior change and maternal and early newborn health: Dilemmas for safe motherhood*. Aberdeen, Scotland: University of Aberdeen, Dugald Baird Centre for Research on Women's Health, Department of Obstetrics and Gynecology.

Koblinsky M. (1995). Beyond maternal mortality--magnitude, interrelationship, and consequences of women's health, pregnancy-related complications and nutritional status on pregnancy outcomes. *International Journal of Gynecology and Obstetrics, 48 Suppl*, S21-32.

Manandhar MS, Osrin D, S. B., Mesko N, Morrison J, Tumbahangphe KM, Tamang S, et al. (2004). Effects of a participatory intervention with women's groups on birth outcomes in Nepal: cluster-randomized controlled trial. *Lancet, 364*, 970-979.

McCormick MC. (1985). The contribution of low birth weight to infant mortality and childhood mortality. *New England Journal of Medicine, 312*, 82-90.

MOMA group. (1998). *Morbidité maternelle en afrique de l'ouest. Résultats d'une enquête en population à Abidjan, Bamako, Niamey, Nouakchott, Ouagadougou, Saint-louis et Kaolack. [Maternal morbidity in West Africa. Results of a population survey in Abidjan, Bamako, Niamey, Nouakchott, Ouagadougou, Saint-louis and Kaolack.]*.Paris: Ministry of Foreign Affairs - Coopération et Francophonie.

Murray C, & Chen L. (1992). Understanding morbidity change. *Population and Development Review, 18*(3), 481-503.

Nachbar N, Baume C, & Parekh A. (1998). *Assessing Safe motherhood in the Community: A Guide to Formative Research*. Washington, DC: JSI/MotherCare.

National Institute of Population Research and Training (NIPORT), Mitra and Associates, & ORC Macro. (2005). *Bangladesh Demographic and Health Survey 2004*. Dhaka, Bangladesh and Calverton, Maryland [USA]: National Institute of Population Research and Training, Mitra Associates, and ORC Macro.

National Institute of Population Research and Training (NIPORT), ORC Macro, Johns Hopkins University, & ICDDR, B. (2003). *Bangladesh Maternal Health Services and Maternal Mortality Survey 2001*. Dhaka, Bangladesh and Calverton, Maryland (USA): NIPORT, ORC Macro, Johns Hopkins University, and ICDDR,B.

Ronsmans C, Achadi E, Cohen S, & Zazri A. (1997). Women's recall of obstetric complications in south Kalimantan, Indonesia. *Studies in Family Planning, 28*(3), 203-214.

Ronsmans C, Campbell OM, McDermott J, & Koblinsky M. (2002). Questioning the indicators of need for obstetric care. *Bulletin World Health Organization, 80*(4), 317-324.

Seoane G, Castrillo M, & O'Rourke K. (1998). A validation study of maternal self reports of obstetrical complications: implications for health surveys. *International Journal of Gynecology and Obstetrics, 62*, 229-236.

Sibley L, Sipe, TA, & Koblinsky M. (2004). Does traditional birth attendant training improve referral of women with obstetric complications: a review of the evidence. *Social Science & Medicine, 59*, 1757-1768.

Sloan NL, Amoaful E, Arthur P, Winikoff B, & Adjei S. (2001). Validity of women's self-reported obstetric complications in rural Ghana. *Journal of Health Population and Nutrition, 19*(2), 45-51.

Stanton CK. (2004). Methodological issues in the measurement of birth preparedness in support of safe motherhood. *Eval Rev, 28*(3), 179-200.

Starrs A. (1997). *The Safe Motherhood Action Agenda: Priorities for the Next Decade*. Colombo, Sri Lanka.

Stewart MK, & Festin M. (1995). Validation study of women's reporting and recall of major obstetric complications treated at the Philippine General Hospital. *International Journal of Gynecology and Obstetrics, 48 (Suppl)*, S53-66.

Stoltzfus RJ. (2003). Iron Deficiency: Global prevalence and consequences. *Food and Nutrition Bulletin, 24*(4 (Suppl)), S97-S101.

Thaddeus S, & Maine D. (1994). Too far to walk: maternal mortality in context. *Soc Sci Med, 38*(8), 1091-1110.

UNICEF Bangladesh. (2001). *National Guideline: Prevention and Treatment of Iron Deficiency Anaemia*: Institute of Public Health Nutrition.

United Nations. (2004). Millenium Goals. Retrieved 24 July 2004, from http://www.un.org/millenniumgoals/

Uzma A, Underwood P, Atkinson D, & Thackrah R. (1999). Postpartum health in a Dhaka slum. *Soc Sci Med, 48*, 313-320.

Van Hollen CC. (2003). *Birth on the threshold: childbirth and modernity in South India*. Berkeley, California: University of California Press.

Vanneste AM, Ronsmans C, Chakraborty J, & de Francisco A. (2000). Prenatal screening in rural Bangladesh: from prediction to care. *Health Policy and Planning, 15*, 1-10.

Winch PJ, Alam MA, Akther A, Afroz D, Ali NA, Ellis AA, et al. (2005). Local understandings of vulnerability and protection during the neonatal period in Sylhet district, Bangladesh: a qualitative study. *Lancet, 366*, 478-485.

World Health Organization. (1992). *International Statistical Classification of Diseases and Related Health Problems, 1989 Revision*. Geneva: World Health Organization.

World Health Organization. (2000). Malnutrition: The Global Picture. from www.who.int/nut/malnutrition_worldwide.htm

World Health Organization. (2005). *The World Health Report 2005: make every mother and child count*. Geneva: World Health Organization.

World Health Organization, UNICEF, & UNFPA. (2004). *Maternal Mortality in 2000: Estimates developed by WHO, UNICEF, and UNFPA*. Geneva: World Health Organization.

Yassin K, Laaser U, & Kraemer A. (2003). Maternal morbidity in rural upper Egypt: levels, determinants, and care seeking. *Health Care for Women International, 24*, 252-267.