Regional Infrastructure Program, 2001–2005

A USAID Initiative in South East Europe

Municipal Water Utility Modernization–Saranda

Albania
November 2002

Booz | Allen | Hamilton

04.029.03

TABLE OF CONTENTS

EXECUTIVE SUMMARY 1
1.0 INTRODUCTION 3
2.0 GENERAL BACKGROUND 4
3.0 MAP DEVELOPMENT 5
3.1 Development of Base Map 5
3.2 Incorporation of Urban Plans 5
3.3 Incorporation of Water and Wastewater Networks 6
3.4 Conclusion 6
4.0 URBAN DEVELOPMENT PLAN 7
4.1 Current Situation 7
4.2 City Zoning 7
4.4 Phased Development 8
4.5 Population 8
5.0 WATER SYSTEM 10
5.1 Design Basis 10
5.2 Existing Situation 10
5.2.1 Navarica Water Works 10
5.2.2 Vrioni Water Works 11
5.2.3 Reservoirs At Qaf Gjashta 12
5.2.4 Distribution System 13
5.2.5 Summary Of The Existing System 14
5.3 Proposed Water Supply System For Saranda 14
5.3.1 Water Demand And Production Capacity 14
5.3.2 Potential Expansion Water Resources 16
5.3.4 Design Concepts And Options For Water Distribution 17
5.4 Water Infrastructure Development Plan 18
5.4.1 Water distribution system Saranda 18
5.4.2 Storage reservoirs 19
6.0 WASTEWATER SYSTEM 21
6.1 Current Condition Of Wastewater System 21
6.1.1 Main Collector 21
6.1.2 Koder Wastewater System 24
6.1.3 Area North of the Stadium 24
6.1.4 Other Sewer Pipes in the Town 24
6.1.5 Wastewater Pumping Station and Rising Main 25
Booz Allen Hamilton, 2003 26
6.1.6 Channel to Çuka 26
6.1.7 Summary of Existing Conditions and Emergency Works 27
6.2 Wastewater System Design Development 28
6.2.1 Core Design Elements 28
6.2.2 Design Criteria 29
6.2.3 Wastewater System 30
6.2.4 Conceptual Wastewater Treatment Plan 31
6.3 Wastewater System Development Phases 33
6.3.1 Population Projection 33
6.3.2 Sewer Flow During the Out-Years 34
7.0 SUMMARY AND CONCLUSIONS 38
7.1 GIS and Map Framework 38
7.2 Urban Development 38
7.3 Water Infrastructure 38
7.4 Wastewater Infrastructure 39

APPENDIX A – CLIMATIC DATA 40
Table 19: Maximum wind velocity m/s 40
APPENDIX B – SCHEMATIC OF RESERVOIR SYSTEM 42
APPENDIX C – CALCULATED WATER DEMAND 43
APPENDIX D – PROPOSED NEW RESERVOIR SCENARIO 51
APPENDIX E – DATA OUTPUT FOR PRESSURE ZONES 52
APPENDIX F – WASTEWATER TREATMENT SCHEMATIC 57

EXECUTIVE SUMMARY

The intent of this project was to develop a framework of map (topographic), urban development, water, and wastewater infrastructure data to assist future project identification and prioritization. The framework developed consists of a series of eight (8) maps. The maps include a base map of the city, urban development maps for 5-, 10-, and 15-year planning, water and wastewater infrastructure maps for current infrastructure as well as 5-, 10-, and 15-year infrastructure expansion, and water demand maps for current, 5-, 10-, and 15-year population estimates.

The first step in the project was to establish a base map for the city and surrounding area. Of the various maps available, a photogrametric map was selected as the best option. The map was made from aerial photography taken in 2001. It also provided elevation data that was crucial for the engineering design phase. Software used for developing the maps and databases are mainly AutoCAD and ARCVIEW.

Rapid urban development in the area surrounding Saranda has increased the urgency for infrastructure planning. Urban development plans provided by the municipality formed the basis of estimating future population after they were digitized and integrated into the base map framework. The urban development plans designated land for buildings (individual constructions) and in some cases, social infrastructure (schools, parks, utilities).

Saranda currently has a resident population of approximately 29,000 and a total of approximately 40,000 tourists visiting during the summer months for a rough total of 70,000. With the development planned over the next 15 years, the municipality's residential capacity (including summer tourists) is expected to be 123,000.

The population projections were used to develop the water demand projections as well as design water and wastewater modernization and expansion infrastructure. The water demand forecasted to supply the population for 2015 is 282 l/s. This exceeds the current volume of water available to the city. Additional resources were briefly evaluated and the most likely alternative, expansion of the Navarica well field is discussed.

For the municipal water distribution system, a computer model (LOOP) was used to establish pressure zones and pipe sizes. Management of system pressure is important for improved service to areas around the city. As a result, the system has been designed for 5 pressure zones. Three new reservoirs will be necessary to serve the planned development areas and one new reservoir will be necessary for increasing the water supply for the core of Saranda where many residents do not currently have water connections.

The wastewater system was designed to receive 732 l/s and is sized based on the maximum hourly wastewater flow rate. Inflow from the storm water system was also included (45 l/sec) since a portion of the city's runoff enters the wastewater system. The sewer flows developed are based on the assumption that the all the areas will be occupied by 2027. The maximum estimated flow (2027) was used for the basic specifications for wastewater treatment and for sizing the main sewer pipes from the channel to Çuka canal where the current outfall is located (also the site for the proposed wastewater treatment facility).

Several sections of the city do not currently have wastewater connections. Main lines for adding service to these areas have been included on the wastewater infrastructure map.

Additionally, a second collector will be necessary to intercept wastewater from the existing higher portions of the city. Once the connections are made, the volume of wastewater will exceed the current pump station and Çuka channel capacity for removing wastewater. Additional capacity will be necessary either by increasing the channel capacity or by constructing a second channel.

The following chapters provide more detail on each aspect of this project.

1.0 INTRODUCTION

Saranda is located in the southern part of Albania and in 1996 had a population of approximately 23,500. The city has expanded rapidly in recent years placing severe strain on existing water and sanitation systems. Saranda's high potential for tourism development further exacerbates the situation. The water supply transmission mains were installed in the 1960's. The raw water comes from two sources, a spring source and a well field and which is of good quality. It complies with EU standards for drinking water and treatment is not required. The water supply system has been rehabilitated in recent years but this has not been completely satisfactory in terms of line pressure and supply to many parts of the city is intermittent. In addition, losses are high and the hydraulic capacity of the system is inadequate. Expansion of the town is creating greater demand causing further reduction in pressure within the mains.

The situation in regard to wastewater is similar. The system was constructed over a period of 50 years since 1944. It was initially a separate system but from various building construction and other activities, the wastewater network has now been connected to the storm water system in many locations. The main collectors have insufficient hydraulic capacity and in some areas they do not have sufficient slope. As a result, silt deposits of up to 50% of the pipeline cross section is common. Manholes are largely without covers and much debris has fallen in resulting in further blockages to the flow.

Both the EU and the World Bank are investing money in Saranda with the intention of improving the town's water and wastewater infrastructure. In Saranda, the EU is concentrating mainly on funding emergency public health measures under Quick Start 1701, which includes well field pumps and chlorination equipment on the water infrastructure, together with re-habilitation of main collectors, manholes and the cleaning of channels for wastewater.

The purpose of this project was to develop a framework to assist future project identification and prioritization by the City, the Utility and the EU, in particular for the identification and prioritization of EU near terms investments in the City's water and sanitation infrastructure. The framework consists of the following series of maps that were developed for the city.

Map 1. Base Map - City of Saranda
Map 2. Existing Water Infrastructure – City of Saranda
Map 3. Existing Sewerage Infrastructure – City of Saranda
Map 4. Existing and 5 year Water Demand Map – City of Saranda (2 line title)
Map 5. 10 and 15 year Water Demand Map – City of Saranda
Map 6. Existing, 5, 10, and 15 year Urban Development Map of the City– City of Saranda
Map 7. Existing, 5, 10, and 15 year Water Infrastructure and Design Scenario – City of Saranda
Map 8. Existing, 5, 10, and 15 year Sewerage Infrastructure and Design Scenario – City of Saranda

2.0 GENERAL BACKGROUND

The country of Albania has a sub tropical Mediterranean climate. According to the Albanian Climatic Division, Albania is made of four Mediterranean Climatic Zones:

- Lowland Mediterranean zone;
- Hilly Mediterranean zone;
- Pre-mountainous Mediterranean zone and,
- Mountainous Mediterranean zone.

Each of the zones is divided in the sub zones and Saranda within the southern part of the Lowland Mediterranean zone. Mild winters and dry summers are typical characteristics of this zone. The solar radiation in Saranda is 153.4 kilocalories /cm2/year and the average air temperature is 17.6 °C. Air temperature, wind, and precipitation data are presented in Appendix A.

3.0 MAP DEVELOPMENT

This task was specifically to provide mapping and GIS support for development of the "Master Plan for Water and Wastewater Network Project of the City of Saranda". The task also required development of a data base that can be used in the future for either implementation or variation of this plan.

3.1 Development of Base Map

Establishing the base map for the city and surrounding area was the first activity that took place. The base map was required to:

- Facilitate estimation of current and future population within Saranda and the surrounding area.
- Show the position of the roads.
- Provide terrain (elevation) information.

Several different sources of map information for the City of Saranda were evaluated. A Photogrametric map was selected as the best option. The map had been made from the aerial photos taken in 2001. Advantages of this map compared with others existing maps are:

- It was the most current.
- It provided elevation data. Contour lines for the main region are every 1 meter. This was a necessary requirement for developing water and wastewater networks.

A portion of the area surrounding the city was not included in the aerial photography. For this area, elevation data was digitized from topographic map of scale 1:10000.

Software used for developing the maps and data bases are mainly AutoCAD MAP, ARCVIEW and Extensions. Usage of these programs is becoming common in Albania, so using the data base developed for this project is not going to be difficult.

In general all map objects are in the final format form .DWG and .SHP to allow a user to use either AutoCAD or ArcVIEW GIS.

3.2 Incorporation of Urban Plans.

Scanning, georeferencing, and digitizing were conducted to extract data from existing urban plans. Data that was captured included: planned road placement, number of new buildings (population).

Neighbourhoods were divided based on the partial urban studies. For zones where either plans were not available or the plans were contradictory, assumptions were made to make the plans consistent.

After digitizing, a GIS database was created for roads, neighbourhoods, and buildings. The database is designed to be flexible for population calculation based on the number of people projected per household or for calculation based on area (per constructed m2).

The data and corresponding maps for urban development are sufficient to use for estimation of water and wastewater requirements, but is not at the same level of accuracy as the base map.

3.3 Incorporation of Water and Wastewater Networks

Both the water and wastewater networks are in digital formats (.DWG and .SHP). The networks contain line and point objects.

- Reservoirs;
- Nodes;
- Water network;
- Wastewater network;
- Discharges.

All of the elements are in separate GIS files, which allow them to be treated separately as needed. Through consistent use of object names, it was possible to linked each object with all data associated with the object including calculated engineering values). Other examples of data linked to objects are: point identifier, diameter of water and wastewater pipes, pipeline pressure, length etc. Each element of database has unique number. Updating the database can be done in common software like (EXEL, ACCESS, etc.). Establishing this type of database facilitates evaluation and modelling of the system as well as facilitates production of tender documents.

Reports and statistics can also be produced without requiring GIS software. Future preparation of thematic maps can be done easily, as long as object identification is kept consistent while changes are made.

3.4 Conclusion

Geographic base map that is used for this project has an excellent level of accuracy and the electronic files have been designed to maximize their flexibility:
Advantages:

1. The database can be used for studies in other fields of municipal activity. Examples include: management of road investments, development of urban studies, development of property address system, modernization of electrical services, etc.
2. The database can be updated digitally through software that is in common usage. (EXEL), however, use of GIS software will maximize the system capabilities. This database can be linked with the data that water enterprise have. Use of this kind of database can significantly reduce administrative costs for the municipality.

4.0 URBAN DEVELOPMENT PLAN

4.1 Current Situation

Saranda's existing urban area is clearly visible, as are the new areas that are intended for future development. The existing city has residential districts, which are bounded by roads parallel to the sea. These roads provide the main access into and out of the city, as well as the few roads that are perpendicular to the coast, which in most part are terraced roads that follow the terrain slope.

Most buildings within Saranda were built with 4-5 floors as collective residences. After 1990 and the political changes in Albania, the Local Government compiled urban plans, intending to expand the city borders while providing infrastructure access. The urban development projects designated land for buildings (individual constructions) and social infrastructure (schools, parks, utilities). Local Government, in the execution of these urban plans, sold the land where it was a state held property and allowed citizens to construct build on the property without permits or other permission.

Sale of the land has been completed for all of the proposed development areas. During recent years, some sections within the development areas have already been constructed. This new development is mainly near the city and it utilizes the existing infrastructure. Many of the recently constructed buildings have violated the predefined conditions of the Local Government regarding the number of floors and the building function.

4.2 City Zoning

The city has recently made changes to zoning. Some centres of light industry are no longer in use and have fallen into disrepair. One of centre that was light industry has now become administrative area. Designation of use zones is not practical for Saranda. Many small industries exist in residential buildings. Most buildings within the city are of mixed use where multiple uses occur within individual buildings. This is true for residential, light industry, business, and administrative uses.

A number of hotels, bars, restaurants, nightclubs, shops, parks, and avenues are built along the coast. This is a distinct and well developed tourist area. However, many new buildings in the residential area, including apartments throughout the city, are used as holiday residences during the summer tourist season.

4.3 Urban Plans

There are currently 16 urban plans that address development in various parts of the area surrounding the city. When considered together with the existing city boundaries, planned development will significantly increase the size of the city. For Saranda, the maps of the existing city together with the 16 plans that will be implemented in the future constitute the Urban Plan of city development. The planned development is expected to be implemented over the next twenty years (2002-2022).

In support of the planned development, the Local Government has completed the land sale for execution of this plan. These Projects are still conceptual and do not have substantial details

regarding aspects such as construction of roads and other infrastructure networks. In many cases this has already caused complications where construction has already taken place. For example, the urban Plan No.5 was designed and sold to the citizens without regard to the terrain. About 130 parcels should be reviewed in accordance with the terrain and also the infrastructure network.

The same situation is true for studies No.3 and No.4. Although these plans anticipate the construction of habitation districts with individual houses (2-3 floors) as well as public infrastructure, the mentality of the people is mainly to build rooms or apartments for the tourist season.

For this project, all of the existing urban plans were incorporated for the first time into the digital base city map. Necessary adjustments were made to the plans to correspond to the existing road system. This forms the main base upon which the population data and ultimately water and wastewater data are calculated.

The only studio, which follows the separation and land piquet in Saranda was trained by us and on basis of base city map has digitalized all the information on terrain.

Presently, there are requests from the community for additional land development that is outside the borders of the existing planned development. Unmanaged development could result in an urban catastrophe, for the tourist area along the coast as well as for those areas planned in the upper part of the city.

All these requests are not leaned on authentic studies, which have to do with the demographic or economic growth and are not assessed by us.

4.4 Phased Development

Based on existing construction activities, the existing infrastructure, and the infrastructure that will be either restored or built in the future, 5 development phases are anticipated. Each of the development phases are expected to span a 5 year period.

For each of the phase of construction, the number of houses was calculated and the number of people per building was developed according to the strategy discussed in section 4.5 of this report.

4.5 Population

Saranda currently has a population of approximately 29,000 residents. The Local Government does not have precise population data for either the city or the surrounding developing areas. Officials with the Local Government also must estimate population growth during the summer tourist season. According to them, population in summer increases the number of residents to between 70 and 75 thousand.

The number of individuals living within a particular area was calculated based on land parcel area, the number of buildings, the number of building levels anticipated.

Future population growth was calculated on the assumption that population growth will continue at the same rate as it has in recent years. This, combined with the maximum number of people per building was used to estimate the future population of the city. This provides a robust estimate of population for the city and assumes that the maximum occupancy is attained. The results are shown on the following table.

Table 1: Population By Region

NAME	SUP. HA	NR. HOUSES	PERIMETER	AREA OCCP.LAND	NR FLOORS PLANNED	HABIT/ /FLOOR	HABIT/ /FLOOR SUMMER	BASE POPULATION	SUMMER POPULATION
ZONE 3	8.6	117	1,575	2,233	2	3	4	758	1,236
CUKA	153.4	2021	8,120	235,824	3	3	4	13,642	22,132
STUDY 4	9.7	119	1,744	14,369	2	3	4	739	1,199
SARANDA	202.1	0	11,323	-	-	-	-	29,000	70,000
STUDY 2	11.6	216	1,746	23,519	2	3	4	1,225	1,976
ZONE 1	20.0	290	2,503	34,689	3	3	4	1,958	3,210
STUDY 5	10.4	184	1,742	18,766	2	3	4	994	1,646
STUDY 6	38.9	489	3,207	70,225	2	3	4	2,641	4,303
EXTENDED STUDY	9.6	203	1,350	20,734	3	3	4	1,370	2,233
QAFE DARDHA	6.7	120	1,098	16,859	3	3	4	940	1,514
STUDY 3	12.8	229	1,432	27,233	3	3	4	1,855	2,996
STUDY 8	11.0	83	1,582	13,062	2	3	4	403	642
STUDY 7	12.2	131	1,880	17,441	2	3	4	707	1,153
FACTORY	10.8	0	1,614	-	-	-	-	-	-
ZONE 2	20.6	328	2,390	47,815	3	3	4	2,657	4,292
STUDY 1	28.6	475	2,934	57,699	3	3	4	3,591	5,843
TOTAL									124,375

Booz Allen Hamilton, 2003

5.0 WATER SYSTEM

This report presents the results of the Master Plan study and proposed preliminary designs for the upgrading and expansion of the Water Supply system for Saranda.

5.1 Design Basis

The design objective for Saranda's water supply system is to supply water of sufficient quantity (24 hrs/day) and quality in compliance with the EU directives, to 100% of Saranda's population. Studies on population, present and future water demand, and available water resources were evaluated, and data from the reports were used as the basis of assumptions for Saranda's projected expansion of the water supply system.

The applied design criteria for the system are also based on actual system measures, professional experiences in similar Albanian cities and also from literature.

5.2 Existing Situation

This section describes the existing installations and their present operation and maintenance practices. The information is an update of the material presented in the original Master Plan and was obtained from the Saranda District Water Supply Company (SDWSC) and through field inspections.

The major existing installations are described in the following sections.

5.2.1 Navarica Water Works

The components of these water works are:
- Spring intake;
- Transmission main;
- Village connections along the transmission main.

Navarica Spring Intake
The Navarica spring is located about 15 km east of Saranda at an altitude of 255 meters above sea level (asl). The spring intake consists of a tunnel that extends inside the rock. The length of this tunnel is about 20 m and the cross section is 1.8 m x 1.2 m. The open channel in the bottom of the tunnel discharges the water into a weir chamber outside the tunnel. Chlorination occurs for the first time within the chamber.

Two discharge pipes are connected to the weir chamber. One is a steel pipe of DN 150 mm that supplies the village of Navarica. The second one is of DN 250 mm. This is the pipeline that supplies Saranda.

The intake construction is in a fair condition. Water production varies with the seasons; the yield of the Navarica spring fluctuates between 30-70 l/s.

Transmission Main
The transmission main was constructed in 1978. The pipeline is a DN 250 mm (wall thickness 7 mm) spiral wound steel plate pipeline 12 km in length. The transmission main was originally routed directly to reservoir 'R1' with a capacity of 1000 m3 located near Saranda at an elevation 79.5 m asl. Today this pipeline discharges by gravity flow into the new Qaf Gjashta distribution point located at an elevation of 125 m asl near Saranda.

Village Connections
On its way from the water source at Navarica, the water transmission pipeline supplies the villages of Ardhasova, Krane, Fitore, Tremoli, Nehor, Caush, Aliko and Vrioni. All of the villages are part of Delvina District. These villages have a combined estimated present population of approximately 5000 people. Additionally, a number of improvised (unauthorized) connections to the transmission main have been reported along the pipeline as it passes near these villages.

Actual data on consumption for the villages are not measured. However, it is reported that in the dry season not more than 25 l/s arrives at the distribution point for supply to Saranda town.

5.2.2 Vrioni Water Works

The production of water from Vrioni water works started in 1988. The components of these water works include:

- two drilled wells and submersile pumps;
- main pipeline DN 400 mm;
- distribution point at Qaf Gjashta;
- new Reservoir 'R2' of 2000 m3;
- new Reservoir of 90 m3 for Gjashta and Metoq villages.

Wells And Pumping Stations
There are currently two wells at the Vrioni location. The wells were both drilled and have a completed diameter of 400 mm and are 326 m apart from each other. The well field is located about 4 km east of Saranda. Both wells are new (one built and one renovated in 2001) and the pipelines and pumps are in good condition.

The present production capacity of Vrioni well field is estimated at 140 l/s. Each pump chamber is designed to accommodate one submersible pump with a capacity of 75 l/s.

Transmission Mains From Vrioni Well Field
The transmission main was constructed in 1996; it is a 3.3 km of DN 400 mm steel pipeline. The pipe discharges the water in the weir chamber of the Qaf Gjashta distribution point.

5.2.3 Reservoirs At Qaf Gjashta

The area where the reservoirs are located is referred to as Qaf Gjasta. Both the water supply line from the Vrioni well field and the line from Navarica meet at the treatment building prior to re-distribution to the city network. Inside this building, a weir chamber was constructed to allow mixing of the two water sources. The raw water is disinfected via chlorination in this chamber.

The Saranda water supply system has two main storage and service reservoirs located at Qaf Gjashta. Reservoir 1 (R1) was built in 1968 as part of Navarica water works. It has a capacity of 1000 m3 and is located at an altitude of 79.5 m asl. The building is a brickwork construction and the roof is of reinforced concrete. The pipeline connections allow R1 to receive its water from either R3 or directly through the Navarica main pipeline. The construction is in good condition. This reservoir is not currently in service since the entire town is supplied via R3.

Reservoir R2 was built in 1996 as a part of the Vrioni water works scheme. It has a capacity of 2000 m3 and is located at an altitude of 120.5 m. The building is a reinforced concrete construction. Pipeline connections supply R2 directly from the distribution point through a DN 400 mm inlet pipeline. The 90 m3 reservoir which serves Gjashta village is also supplied through the distribution point. A small booster pumping station with a capacity of 12 l/s has been installed at the distribution point to pump water from the 90 m3 reservoir to Gjashta village.

The Vrioni water works scheme was considered fully completed in 2002 since the distribution main line from R2 to the city was completed in 2002. R2 discharges water to R1a, R1b and supplies pressure zone No.2. A schematic of the existing system was located and is presented in Appendix B.

There is another old reservoir with a capacity of 200 m3 situated close to R1. This reservoir serves the hotel area, i.e. Hotel Butrinti. The reservoir has stone walls and a reinforced concrete roof. It was the first reservoir built in Saranda in1960.

In addition to the previously mentioned reservoirs, a 200 m3 reservoir was built in 1978 in the western part of Saranda. It was intended to balance storage and distribution performance, however it has never functioned properly and is not currently in service.

<u>Summary of the Four Storage Reservoirs</u>

- Reservoir R2 2000 m3;
- Reservoir 90 m3 for Gjashta and Metoq villages;
- Old reservoir R1a 1000 m3;
- Old reservoir R1b 200 m3.

5.2.4 Distribution System

The Saranda District Water Supply Company maintains a map of the existing distribution network (scale of 1:2000).

The distribution network for Saranda (Map 2) is divided into two systems as follows:

- The low area is supplied by gravity from reservoirs R1 and R2, 24 hours per day. This area includes the old part of the town, the hotel area, and the institutional and commercial area, up to an elevation of 40 m asl;

- The high area is supplied by booster pumping stations installed in high parts of the town with reduced supply time.

The oldest part of the distribution system dates back from 1930, however, the system has been in the process of renovation since the 1990s.

The existing DN 300 mm outlet from R1 is connected to two main distribution pipes of DN 150 mm at the access road to the city. This pipeline serves Pressure Zone 1 for the city and consists of steel and cast iron distribution pipes.

A new line of DN 300mm is under the construction. This will serve the second pressure zone that is supplied by reservoir 2 (R2) for the higher parts of the city. The new part of water distribution system is under the construction. This includes the feeder line intended for pressure zone No.2 (1100ml DM400mm CI). The other main distribution lines that are under construction will be DM 300mm CI. In addition to having a separate reservoir, distribution to the high parts of the city is supported by eight booster pumps.

The different types of pipeline present within the network serving Saranda includes:
- Oldest - cast iron (CI) up to DM 150mm
- Mid (15 – 30 yrs) - steel
- New (present – 10 yrs) - CI DM 400-300mm and PEHD 10 at D225, D180, D160.

Individual house connections consist of galvanized steel pipes with diameters of ½ -1 inches. The total network lengths of galvanized steel pipes are estimated to be 4.9 km ½ inch pipe and 4.7 km 1 inch pipe.

Individual connections have had water meters in the past, but presently, only a few of the meters are still in function. The legal number of house connections is currently more than 6,000. Approximately 2,000 inhabitants have no connection to the water distribution system.

Determination of a water balance based on supply, distribution, and system losses was not possible. There are currently no water meters to record either the volume of water supplied by the sources or the volume that arrives at the reservoir, and very few to document the volume distributed through the system.

5.2.5 Summary Of The Existing System

Principle conclusions regarding the present water supply situation in Saranda town are:

Water Supply

- Saranda is supplied by water from two sources (i) The source at Navarice (30-70 l/s); and (ii) Vrioni well field (140 l/s). The groundwater potential of the well field is sufficient to cover the present and longterm water demand through year 2018;
- The water quality from both sources complies with EU standards for drinking water.

Water transport

- From Vrioni wells, water is pumped through 3,300 meters of steel 400 mm pipeline to the main distribution reservoir. This pipeline is in good condition;
- From Navarice spring, the water is transported by gravity flow through 12,600 meters steel DN 250 mm pipeline. Along this pipeline, a number of villages in Delvina district withdraw water from this pipeline.

Water storage

- The available storage capacity of 3,300 m3 is adequate for the short term water demand.

Water distribution system

- Distribution of water from the reservoirs to the city is intermittent. The southern (lowest part) of the city receives water 24 hours per day, but the other higher parts which are supplied by booster pumps receive water only a few hours per day;
- The distribution pipe network has been developed over the years by installation of a great number of small pipes, while fewer efforts were made to increase the capacity of the main distribution lines;
- Unaccounted For Water (UFW) is high, at present estimated to be at least 45 % of production. In addition to technical losses (physical leakages) there are losses of non-technical origin (e.g. unregistered connections). It is further observed that a substantial volume of water is wasted by the consumers since water meters either do not exist or are not working;
- The system is often suffering from interruptions in service due to the poor state of the construction and connections. This is improving with the recent renovation activities.

5.3 Proposed Water Supply System For Saranda

This chapter describes the design proposals developed for the Water Supply of Saranda.

5.3.1 Water Demand And Production Capacity

Several studies have been conducted for both the water supply system and population growth estimates. Recently published water consumption figures (per capita) used for the Albanian cities ranges from a low of 120 l/c/d to a high of 150 l/c/d. For the water supply system, the following water consumption estimates are shown for three scenarios. The average scenario

was used to calculate overall water demand and wastewater discharge at an hourly peak flow rate.

Table 2: Water consumption Estimates

Water consumption data	Scenarios		
	High	Average	Low
Per capita consumption (l/c/d)	150	135	120
Seasonal peak	1.3	1.3	1.3
Day peak	1.1	1.1	1.1
Hourly peak	1.5	1.8	2.0
Institutional and Industrial % of Domestic	15%	15%	15%
Hotel tourist demand	400	300	250
Family house tourist demand	250	200	150
Tourist, % of maximum estimate)	100%	55%	40%
Technical losses	20%	20%	20%

Booz Allen Hamilton, 2003

Design criteria used as the basis for water supply demand calculation are summarized in the following table.

Table 3: Water Demand Criteria per Capita

WATER DEMAND CRITERIA per capita	
Residential Demand	**Value**
1. Domestic consumption - l/c/d	135
2. Institutional consumption - %of domestic consumption	20%
3. Seasonal peak	1.3
4. Daily peak	1.1
5. Hourly peak	1.8
TOURIST DEMAND per capita	
a. Tourists Staying With Family (l/c/d)	200
b. Tourist Staying In Hotel (l/c/d)	300
LOSES % of production	20%

Booz Allen Hamilton, 2003

The population projections developed in Chapter 4 of this report were used as the basis for establishing current and future demand, however a population growth of 3% was applied to represent the population that is expected at a particular time rather than the housing capacity, which is much greater. Demand criteria were developed and demand forecasts have been calculated. A table of calculated values (population and water demand by distribution system node) is included in Appendix C.

The required production capacity within 15 years is approximately 282 l/s.

The present installed capacity is:
Vrioni wells: 140 l/sec

Navarice spring: 30 - 70 l/s

The present production capacity is sufficient to cover the demand through 2008, provided that efforts to reduce UFW due to network rehabilitation and removal of unauthorized connections are successful. The following chart provides a plot of expected water demand.

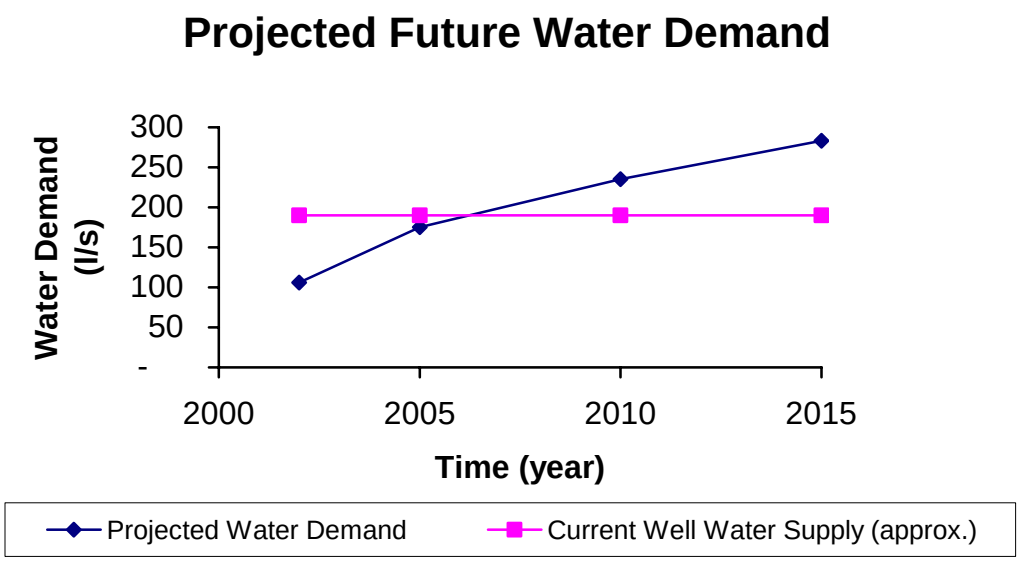

Figure 1:

5.3.2 Potential Expansion Water Resources

The following potential water sources have been considered for Saranda WS:

- Navarice spring
- Vrioni wells
- Blue eyes spring

The Navarice spring is already utilized for Saranda WS by using a 12 km transmission main that connects to the main reservoir. The supply capacity averages 50 l/s with seasonal variations between 30 - 70 l/s. However approximately 22 l/s of its capacity is utilized by villages in Delvina district, leaving a fraction of the capacity for Saranda. Consideration has periodically been given to disconnecting these villages from the Navarice transmission main and to developing individual water systems for each village. However, this may not be practical since the alternative water systems in these villages require high-pressure distribution due to substantial variations in elevation. Additionally, individual water systems for each village would require significant investments.

According to the hydrogeological studies, the Vrioni well field is sufficient to satisfy future water demand. For phase 1 of Saranda's expansion, no additional capacity is required. However, for phase 2 (2008-2013) additional wells may have to be constructed. The safe yield capacity of the well field should be verified before this alternative is selected.

Another option as a water source for the future is the Blue Eyes spring (18 m3/sec). The spring is located approximately 20 km from Saranda. However, the development (gravity

based) of this large water source is only feasible if the scope of supply is seen in a more regional context.

Conclusion: Vrioni well field is the most immediately feasible water source to supply the future water demand for Saranda, however, other alternatives may be necessary.

5.3.4 Design Concepts And Options For Water Distribution

The following design concepts for the water distribution were considered in development of the proposed water supply infrastructure network:

Division Of The Town Into Pressure Zones

The topography of Saranda varies between 5 m a.s.l. and 175 m asl As mentioned previously, the existing supply reservoirs are located at altitudes of 120 m and 80 m asl Under the present conditions, no pressure zoning is applied which is causing very high pressures in the lower part of the city and very low pressure in the high parts. As a result, there is unequal distribution of water with frequent shortages in the high part and wastage in the low parts.

To minimize the pressure variations, it is recommended that the city be divided into five pressure zones. The pressure zones modelled for this report include:

- Zone 1 0-35m asl;
- Zone 2 35-70m asl;
- Zone 3 70-105m asl;
- Zone 4 105-140m asl;
- Zone 5 140-175m asl.

The reservoirs for pressure zones No.1 and No.2 are currently supplied by gravity flow from the main distribution chamber. Three new reservoirs are recommended, one each to supply the three new pressure zones. A diagram of the proposed locations and associated reservoir data has been included as Appendix D.

Table 4:

Pumping Stations For Zones 3,4,5

PUMPING STATION No.	LOCATION	ELEVATION m asl	SERVICE ZONE	Q l/s	Hm	N kw	PHASE
1	SHPERNDARESI ne Qaf Gjashta	120	3,4,5	3*27	45	3*18	1
2	Reservuari No3	155	4, 5	2*26	45	2*18	1

3	Reservuari No4	190	5	26	45	18	2

Booz Allen Hamilton, 2003

New pumping stations will be necessary for each of the new pressure zones.
One pump will take water for three zones from Distribution chamber to R3. Another pump is intended to take a portion of the supply from R3 and supply R4. A third pump will be used to send water from R4 to supply R5. This option minimizes the required pump sizes and the length of pipeline required to supply the new reservoirs.

The existing distribution system encompasses pressure zone 1 while the new construction will address improved distribution for pressure zone 2.

The renovation works under way plan on replacing pressure zone 1's feeder line with DM 500mm. The existing pipe, DM 300mm, is enough for the present situation, but the new feeder will be necessary to provide adequate supply within 5 years.

5.4 Water Infrastructure Development Plan

The preliminary design proposal for Saranda's water supply are described in the following paragraphs. The proposals are divided over three project phases and spans of time:

Phase 1: through 2008
Phase 2: years 2008-2013
Phase 3: years 2013-2018

5.4.1 Water distribution system Saranda

Analyses have been conducted for design of the main distribution system (see Appendix E) using the "Loop" simulation computer programme. The proposed network is shown on Map 4.

The topography and corresponding elevation changes in Saranda vary from 5 m to 175 m asl. In order to facilitate even distribution of water to the service areas, the distribution system was divided into five pressure zones as indicated in the following table.

Table 5
PRESSURE ZONES, AREA, POPULATION, AND WATER DEMAND

PRESURE ZONE	Surface ha	Residents	Tourist staying with a family	Tourist staying in hotel	TOTAL
1	110	20,000	14,047	600	34,647
2	194.2	21,440	11,908	900	34,248
3	94.4	7,550	2,492	-	10,042

4	84.1	6,728	4,037	-	10,765
5	84.3	6,744	4,046	-	10,790

WATER DEMAND per Zone (l/s)		Residents	Tourist staying with a family	Tourist staying in hotel	TOTAL
ZONE 1 up to 35masl and reservoir at the elevation 70masl		57.5	38.3	1.9	97.7
ZONE 2 up to 70masl and reservoir at the elevation 120masl		64	37	1.7	102.7
ZONE 3 up to105 masl and reservoir at the elevation 155masl		22	7	0	29
ZONE 4 up to 140masl and reservoir at the elevation 190masl		19.6	6.4	0	26
ZONE 5 up to 175masl and reservoir at the elevation 225masl		19.6	6.4	0	26

TOTAL AREA ha	**567**
TOTAL POPULATION	**100,492**
MAXIMUM WATER DEMAND l/s	**281.4**

Booz Allen Hamilton, 2003

The results of the computer calculations for the main network are provided in Appendix E.

5.4.2 Storage reservoirs

The sizes for reservoirs supplying the city's pressure zones was based on calculated storage volume. The volume was determined to be 25% of the designed flow for the year 2018. This amounts to: 280(l/s) x 3.6 x 24 x 25% = 6,050 m3.

The existing reservoirs and the first proposed reservoir (R3) have a storage capacity of: Rl + R2 + R3 = 1000 + 200 + 2000 = 3200 m3. As mentioned previously, the existing reservoirs, Rl and R2 supply pressure zone 1 via gravity flow, while reservoir R3 will supply the second zone by gravity flow.

The capacity of R1 (1000m3) is not sufficient for the Zone 1. An additional reservoir, with 1000m3 capacity, will be necessary to meet the anticipated demand, particularly as new connections are established to supply areas that currently do not have water connections.

The reservoirs sizes for zones 3,4,5 are recommended to be 500 m3 each for a total of 1,500 m3. For the phased expansion of the network, construction of R3 is planned for Phase 1; construction of R4 and extension of R1 is planned for Phase 2; and construction of R5 is planned for Phase 3. The following table provides a summary of reservoir data.

Table 6:

RESERVOIRS

PRESSURE ZONE	ELEVATON	WATER DEMAND	ESTIMATED RESERVOIR VOLUME	EXISTING RESERVOIR CAPACITY	NEW RESEVOIR CAPACITY	PHASE
1	0-35	97	2095	1200	1000	2
2	35-70	103	2225	2000		
3	70-105	29	626	0	500	1
4	105-140	26	562	0	500	2
5	140-175	26	562	0	500	3

Booz Allen Hamilton, 2003

The renovation and construction of the distribution system is also divided into three phases:

Phase 1 Pressure zones Nos.1, 2
Phase 2 Pressure zone No.3
Phase 3 Pressure zones Nos. 4,5

6.0 WASTEWATER SYSTEM

The existing sewerage system in Saranda was constructed over a period of 50 years starting in 1944. The wastewater collection system is separated from the storm water system, however, some storm water inflow is common since the storm water system only exists in part of the city, specifically, near the bay. As a result, rainfall runoff flows along the sides of roads can enter the wastewater system.

Based on the current city plan and roads development, wastewater is collected from lateral sewer pipe running in the east-west direction and carried from sewer lines running in the north-south direction. There are six main lateral sewer lines that discharge wastewater to the collector. Four of the laterals originate from the town centre and two originate from the "Koder" area.

The collector is a pipeline running in the west-east direction, starting from the stadium in the "Koder" area and continuing east to the wastewater pumping station. According to the design specifications, the wastewater pumping stations (WWPS) pumped wastewater up to an approximate elevation of 27 m and from there, flow was gravity driven through a concrete box channel to Çuka channel. In front of the WWPS, an overflow outlet was constructed to allow discharge of wastewater to the sea when the pumping station was not operating.

6.1 Current Condition Of Wastewater System

A feasibility study titled "Saranda Water Supply and Sanitation", was prepared by IWACO (Netherlands) in collaboration with HUK Projekt (Albania) in 1997. In 1998, a series of projects were identified and a document, "Emergency Measures Final Design and Tender Documents" was prepared by AWT, Austria in collaboration with HUK-Projekt, Albania. These projects have been approved and construction is currently under way in Saranda for the most critical part of the wastewater system. Activities currently under way have been incorporated into the maps for this project.

Since 1997, development plans for the city have changed. Several new areas have been identified for development and were incorporated into this project's development plan. Some of the emergency works currently being performed were identified and implemented due to changes in the construction development.

The following list identifies the key components of Saranda's sewerage system.

- Collector
- Koder sewerage system
- Waste water pumping station
- Rising main from waste water Pumping station to gravity flow channel
- Channel to Çuka

6.1.1 Main Collector

Originally, a 400mm diameter waste water pipe served as the city's main collector. Flow was gravity driven up to the wastewater pumping station. The pumping station, however, was not always operated. For example, in order to save electrical energy during wintertime the

pumping station was shut down and the old collector discharged wastewater through an overflow pipe directly to the sea about 200 m far from the WWPS.

The current main collector was constructed 12 years ago in order to improve wastewater collection from Saranda. The collector's concrete sewer pipes ranged in size from 400 mm to 800 mm in diameter and have a rectangular section measuring approximately 0.7x1.0 and 1.2x 1.0. This new collector was constructed parallel and adjacent to the old waste water pipe. In some places, the interceptors were directly connected to the new line, while in others, the original collector was connected to the new line. In cases where the old and new collectors were connected, the connection is generally via concrete pipe 200 mm in diameter.

The collector is made with circular concrete pipes DN-400, DN-600, DN-800 and rectangular section 1 x 1.2 m. During the Emergency Works Study carried out by AWT, Austrian Consulting in collaboration with HUK-Projekt, a survey of the collector was conducted including:

- About 80 % of the trace of collector
- Some of the manholes construct in the collector
- Sewer pipes depth and,
- Solids height in sewer pipes

Figure 2: Collector specifications for concrete rectangular box segment.

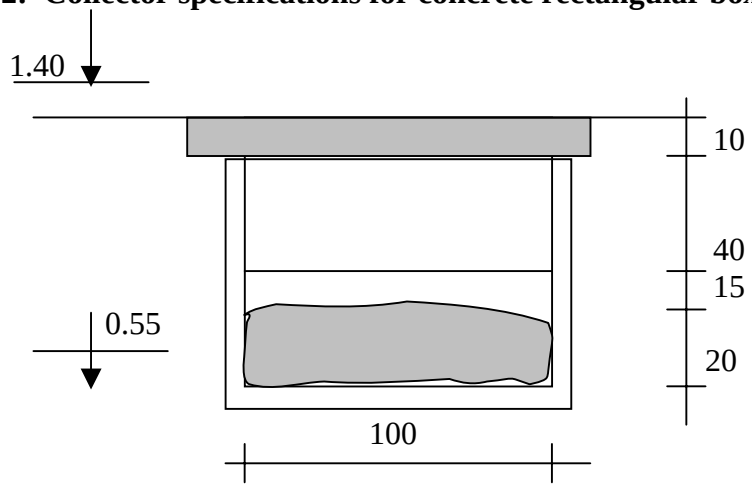

Booz Allen Hamilton, 2003

Figure 3: Collector specifications for circular reinforced concrete pipe segment (DN-800)

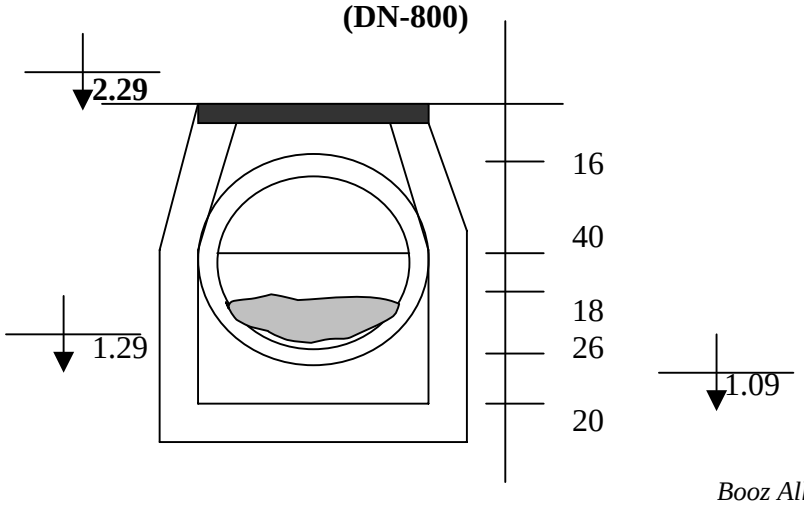

Booz Allen Hamilton, 2003

Figure 4: Collector specifications for circular reinforced concrete pipe segment (DN-600)

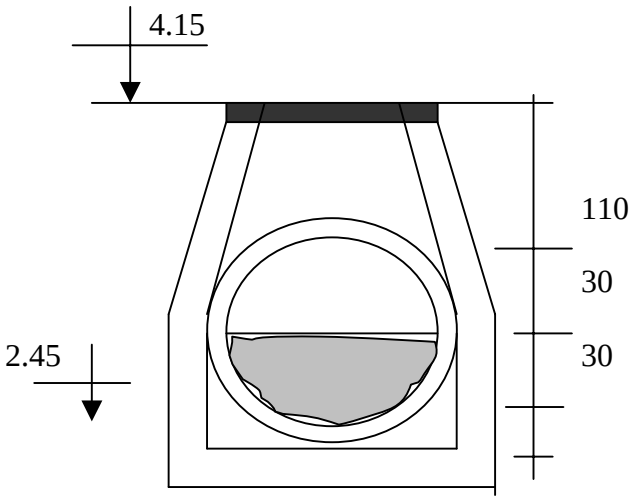

Booz Allen Hamilton, 2003

The following sections provide a description of the different parts of the collector.

Circular Sewer Pipe DN – 600 mm

This pipeline is located beneath the asphalt road. The placement of the line is irregular and varies from the right to left side of the road. Of the 11 visible manholes, only 6 can be opened. At those locations, the pipe was observed to be in good condition. The segment was also laid with an acceptable slope. The pipe length is approximately 471 m and the main problems for segment are:

- Manholes need some minor repairs, and the visible manholes that can not be opened should be repaired in order to access the pipe
- The manholes which have been completely paved over should be opened and repaired, or in some cases, as necessary, new manholes should be constructed
- Deposits, that generally block half of the pipe section, account for a total volume of 66 m3 should be cleaned

Circular Sewer Pipe DN – 800 mm

This pipeline is laid beneath the garden on the side of the promenade. It was possible to check only one manhole in between, and was not possible to see the manhole in the beginning and in the end of this pipe. The pipe was observed to be in a good condition and it is laid in an acceptable slope. The pipe length is approximately 173 m. The main problems for this pipe are:

- The connection between 600 mm and 800 mm pipes was not visible and could not be checked;
- Sedimentation in the pipe was observed at a height 26 cm, which means that a total volume of 28 m3 should be cleaned;
- The visible manhole needs some minor repairs;
- The manholes which have been covered will need to be opened and repaired, or in some cases, new manholes may have to be constructed; and

- The pipe trace should be defined so that further blockages (pipe and manhole access) are prevented.

Rectangular Segment, 70 x 100 cm and 120 x 100 cm
The total length of this pipe is approximately 430 m and it is laid mainly in the ex garden on the side of promenade. Approximately 100 m of the pipe is located beneath the promenade. Along this segment of pipeline, only two manholes were located and investigated. The main problems observed for this pipe are:

- The condition of the pipe and particularly slope of the pipe do not meet technical recommendations;
- Because of low velocity, insufficient slope, blockage of the discharge, and no maintenance, sedimentation nearly fills the pipe, about 200 m3;
- Pipe is laid mainly in the ex gardens where many illegal constructions took place;
- Most manholes are not visible manholes and the point where this pipe joins the old sewer pipe (400 mm pipe that discharged in waste water pumping station) is unclear.

Discharge pipe DN – 400 mm (in case when WWPS is not working)
This pipe is laid partially in asphalt road and partially in rock along the seashore. There are some illegal constructions along the latter portion of the pipe, however, this pipe is blocked and out of use.

6.1.2 Koder Wastewater System

This is the most problematic area of Saranda's sewer system. This is the system that serves the southwest part of the town. Topographically, the area also has a small hill from which the area's name is derived (Koder). The wastewater system within Koder is made of two parts:

- Two half ring sewers on the top of the hill with pipes DN – 200 and DN-300;
- Half ring sewer lower than the first, in parallel road with pipes DN - 400.

Two half ring sewers
This part of the wastewater system is completely out of service and in man places, collapsed. Accessible manholes were checked for pipe conditions. All of the visible half ring sewers were full with deposits as were all of the accessible pipes. This is likely due to the minimal slope for the existing pipes.

6.1.3 Area North of the Stadium

There are many construction activities going on in the west part of Saranda, specifically north of the Stadium. This area does not currently have a wastewater system and is not included in the emergency works that are currently under construction. Some buildings have pit latrines while others discharge to natural courses to the sea.

6.1.4 Other Sewer Pipes in the Town

In addition to the above mentioned main sewer pipes in Saranda, there are other sewer pipes that discharge to the main collector. These pipes are made of concrete and the diameters range from DN-300 to DN-400. The condition of these pipes seems to be better than other

pipes, probably due to the greater slope of the pipeline. However, silt deposits are present. At some point, the lines should be cleaned and undergo minor renovations.

6.1.5 Wastewater Pumping Station and Rising Main

Civil works

The wastewater pumping station is a circular reinforced concrete structure with an outside diameter of 8.25 m. A manhole is located in front of the WWPS with the following dimensions: 1.5x1.5 m and 3.5 m deep. Two gates are located within the manhole. The wall thickness above ground surface is 30 cm while submerged walls measure 50 cm. The structure's walls and concrete cover are in good condition, however, doors and windows are missing. In general, the structure is in need of some limited maintenance and repair. The pumps are located 3 m below ground surface. The basement level, according to the original drawing will be 2.5 m under the pumps. This pumping station in out of service and as a result, wastewater is discharged directly into the sea. The following sections present the available specifications for the WWPS.

Condition of Installation

The existing pumps have not operated for many years and are in extremely poor condition. Replacement of the pumps will probably be more economical than attempting restoration. The same is true for pipes inside station, fittings, and for the electrical system.

Based on the original design drawings, it is clear that the solids height is currently about 1m. For proper operation, the solids should be removed. Additionally, the manhole at the entrance of the WWPS is filled with more than 50 cm deposits that should also be removed. The feasibility study recommends the use of submersible pumps.

Figure 5: WWPS – Planar View

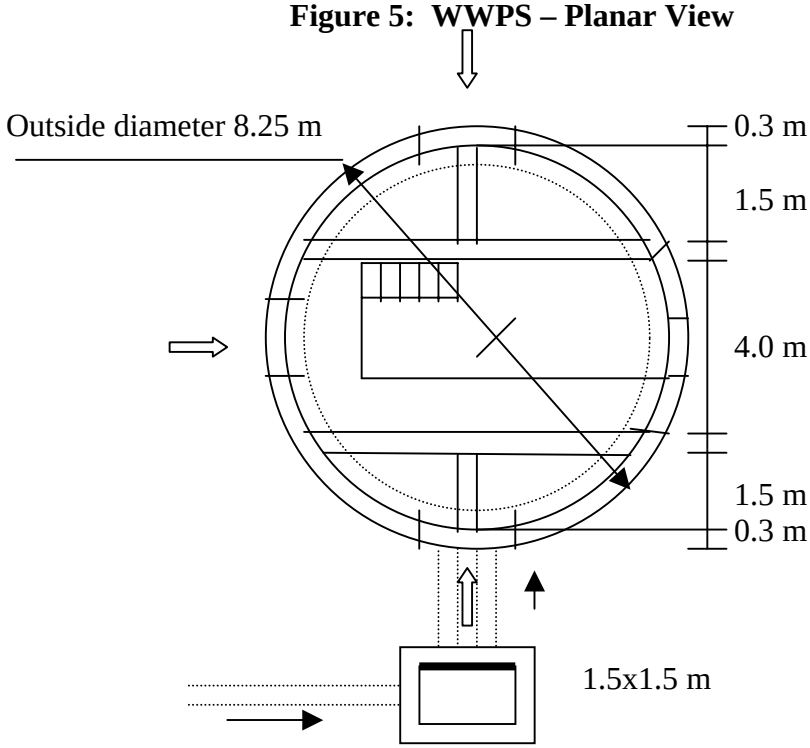

Booz Allen Hamilton, 2003

Section 1 – 1 – Figure 6 : WWPS Other Views

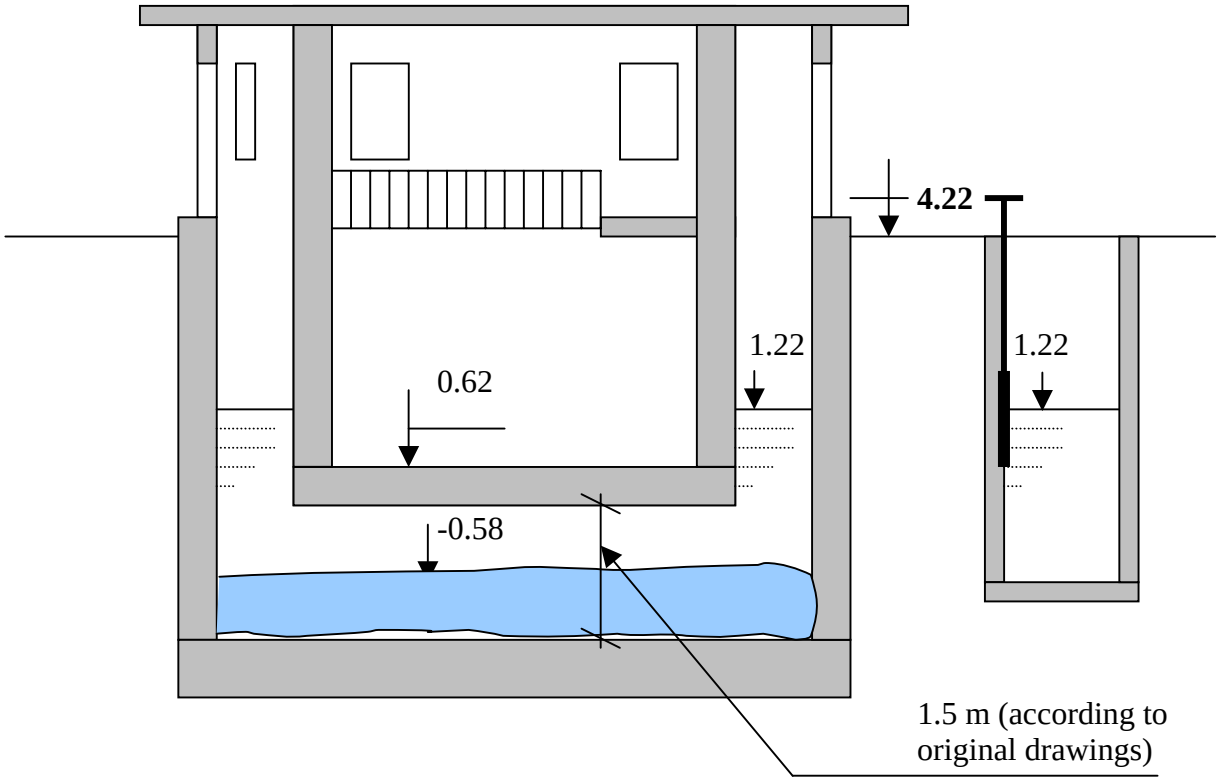

Booz Allen Hamilton, 2003

Rising Main

Pipe length is approximately 250 m and is steel DN-400. The pipe is not visible except from the outlet of the wastewater pumping station. The capacity of the rising main is approximately 250 l/s.

6.1.6 Channel to Çuka

This channel was designed and built to carry wastewater by gravity flow from the end of the rising main to Çuka channel. This channel structure consists of stone or concrete walls plastered with cement mortar and with a rectangular cross section. Along some segments of the channel, concrete covers were also built.

The discharge location, Çuka Channel, is an artificial cut in the rock where the Bistrica river was diverted from the Butrinti Lagoon to the sea.

- Discharge point of the channel is at 24 m a.s.l.
- Length of the channel is 3171 m
- The channel's gradient, originates 28 m a.s.l. and ends at 24 a.s.l., was designed to meet the minimum requirements for gravity flow to reach Çuka valley.
    1. 730 m are not visible;
    2. 125 m are in excavates areas;
    3. 450 m are now within buildings / courtyards;
    4. 310 m are damaged;
    5. 90 m no longer exist;
    6. There are no removable covers to serve for cleaning.

- Channel slope is varies along the length, ranging from 0.0008 to 0.0015;
- Elevation at the beginning of the channel (end of rising main) where wastewater is discharged is 28m a.s.l.;
- Channel cross section varies, but the main channel sections are generally 50 to 55x60 cm or 60 to 70 x110 to120 cm.
- Channel is made of concrete or stone walls plastered with cement mortar and sometimes with a concrete cover.
- The covers for the channels are concrete and fixed in position. Rehabilitation of the channel should include manholes to allow access.
- The designed channel capacity is not more than 130 l/s;

6.1.7 Summary of Existing Conditions and Emergency Works

The wastewater system of Saranda was intended to be separate from the storm water system, however a portion of storm water runoff does enter the wastewater system. The volume of water contributed by storm water (inflow) is not known. The added inflow volume could, at times, exceed the capacity of the existing sewer pipes. The following list identifies selected key system conditions.

- The pumping station, rising main, and the channel to Çuka are out of service. All wastewater is being discharged directly into the sea. The level of E-Coli in the bay has been in excess in the permissible for the classification as bathing water. This is creating both a human health risk and an environmental risk.
- Pipes have been damaged from new development;
- Some pipes have been poorly laid (slope) or damaged during construction;
- Most manholes are blocked by debris;
- Some pipes have been laid too close to land surface and as a result, have been damaged by vehicular traffic;
- In some parts of the existing wastewater system, manholes covers are missing (pathway for storm water inflow).
- In some open manholes, solid waste (garbage) is present and contributes to the sewer blockage.

Based on the conditions of the existing wastewater system the following emergency works have been contracted for completion:

<u>Main Collector</u>

1. Abandon the rectangular segment of concrete pipe and construct a new collector DN-800 instead. The length of the new collector will be 550 m. Ongoing work is replacing the original section with DN-600, with 2.5 m elevation change per thousand linear meters. The new pipe capacity will be approximately 250 l/s.

2. Renovate all existing DN-600 sewer pipe:
    - Clean all the pipes;

- Find and repair all the manholes;
- Construct new manholes in the necessary places.

Sewer in Koder Area

The new wastewater system in Koder will be the same basic design as the existing system, i.e. two half rings sewers will be constructed, discharging separately into the main collector. Sewer pipes 300 mm and 400 mm in diameter will be used and the slope of the pipes will range between 0.004 to 0.0035. Because of flat area, varying the pipe's depth will generate necessary slope. Pipeline depth will range between 1.5 m to 3.5 m.

One critical design difficulty involves the left (west) part of the ring sewer which is intended to discharge at a high part of the main collector. In order for the connection to function successfully, the main collector (DN-400) would have to have a depth 3.5 m. It was not possible to document the current depth of the main collector at that location, however, it seems unlikely that it is 3.5 m below grade. Improvement of this section of the Koder wastewater system will require replacing approximately 160 m of the main collector's pipeline in order to provide sufficient slope for the Koder wastewater pipeline.

The east part of the Koder wastewater network, the half ring sewer, is included in the ongoing emergency works and the sewer pipe will be cleaned and repaired. The manholes will also be renovated.

Sewer for the north of Stadium

For this area, no emergency works have been planned.

Rising main and Channel to Çuka

According to the emergency works program, a new rising main is under construction. The new rising main will be constructed in a slightly different location where buildings do not block the path.

Construction of a new channel to Çuka was included in the emergency works, however, buildings now occupy some of the planned path. As a result, the new rising main (under pressure) will be installed along the existing road from Saranda part of the way to Çuka. The intent is to have the pressure main extend past the region occupied by buildings to a point where wastewater can be discharged to the gravity flow channel and continue to Çuka. The gravity flow channel will also undergo renovation.

6.2 Wastewater System Design Development

6.2.1 Core Design Elements

Design elements for the sewerage system can be placed in two categories. The first category will be for renovation or replacement of the existing part of sewer that is not included in the emergency works and the second will be new pipes that will serve for the extended area of Saranda.

For the existing wastewater system and as is mentioned above, the emergency works address the following critical areas:

- Main collector,
- Waste water pumping station;
- Rising main,
- Channel to Çuka,
- New wastewater system in Koder, and
- Cleaning of some sewer pipelines.

The following criteria are taken into consideration for the development of the wastewater system:

- To include, as much as possible, the existing wastewater system, as well as the emergency works;
- To use, as much as possible, the gravity flow system;
- To reduce the operation and maintenance costs as much as possible;
- To address requirements for limiting discharge to the sea (compliance with Bathing Water Standards).

6.2.2 Design Criteria

Wastewater System

Based on data of population presented as a total of 124,369, and also on the assumption that from the total number of 61,889 population in summer 1,500 will be tourists in the hotels and the rest will be tourists staying with individual families, i.e. 60,389 tourist staying with families. The water consumption data are present in the following tables:

Table 7: Average daily demand (m^3/day)

	Scenarios		
Water consumption data	High	Average	Low
Residential	9,372	8,435	7,498
Institutional & Industrial	1,406	1,265	1,125
Hotel tourist	300	124	75
Family house tourist	7,549	3,321	1,812
net total average, m3/day	18,626	13,145	10,509
including losses, m3/day	23,283	16,431	13,136

Booz Allen Hamilton, 2003

Table 8: Daily demand in summer season (m^3/day)

Residential	12,184	10,965	9,747
Institutional & Industrial	1,828	1,645	1,462
Hotel tourist	600	248	150
Family house tourist	15,097	6,643	3,623
Net total average, m3/day	**29,708**	**19,500**	**14,982**
losses, m3/day	7,427	4,875	3,746
Total required production, m3/day	**37,135**	**24,375**	**18,728**
Total required capacity, l/s	**430**	**282**	**217**

Booz Allen Hamilton, 2003

For waste water system the following data will be used:

Table 9: Design figures for Wastewater System

Total Population	124,369 inhabitants and tourists
For the average daily water flow, 282 l/s the average daily waste water flow for 80 % of water consumption return Average daily waste water flow Maximum waste water flow (3 times) Infiltration to wastewater system, 20 %	157 l/c/d 226 l/sec. 678 l/sec. 45 l/sec.
Total design waste water flow	723 l/sec.

Booz Allen Hamilton, 2003

6.2.3 Wastewater System

The plan for establishing a wastewater system that will serve Saranda and the surrounding areas requires construction of a new collector (interceptor) that will serve the upper part of the area, while the existing collector will serve the lower part of the city. The new collector should will start from the west part of the town (lowest part of Studimi 6) and will finish at Çuka channel at an elevation of 22 m asl. This will be the same place where the existing channel to Çuka will has an endpoint. The length of the new collector will be about 7 Km.

The part of the area in Çuka area, lower than the new collector has not possibility to gravitate waste water neither to channel to Çuka nor to the new collector. For this part a small wastewater pumping stations will be constructed to pump waste water new collector.

Table 10: Maximum wastewater flow from the areas and for each collector

No	Name of Area	Max. flow l/sec.	Collector 1		Collector 2	
			From area	Flow l/s	From area	Flow l/s
1	Zone 3	7.2	100%	7.2		0
2	Çuka	128.7		0	100%	128.7
3	Studimi 4	7		0	100%	7
4	Saranda	407	60%	244.2	40%	162.8
5	Studimi 2	11.5		0	100%	11.5
6	Zone 1	18.7		0	100%	18.7
7	Studimi 5	9.6		0	100%	9.6
8	Studimi 6	25	10%	2.5	90%	22.5
9	Studimi shtese	13		0	100%	13
10	Qafe Dradha	8.8		0	100%	8.8
11	Studimi 3	17.4		0	100%	17.4
12	Studimi 8	3.7	100%	3.7		0
13	Studimi 7	6.7	100%	6.7		0
14	Factory		0	0		0
15	Zone 2	25		0	100%	25
16	Studimi 1	34		0	100%	34
17	Total	723		264		459

Booz Allen Hamilton, 2003

* This part of the flow will be pumped to collector.

According to the sewer flow the existing collector under construction will carry wastewater of the lower part of the area, 264 l/s (this pipe is DN-600 with a slope 2.5 per thousand). Some other collectors will be needed for the high part of the area. The dimensions of the new collectors upper side will be DN-400 to DN-600 and the main collector to Çuka will be DN-800 (at the end with a slope ranging from 3.5 to 3.0 per thousand). It will be very important that a collaboration between the experts, during the detailed design for the roads, where the new collector will be construct.

In this calculations is assumed that in Living area Saranda with 70000 inhabitants, is included the low part of Çuka and the some parts in the entry of the town where the construction area recently developed.

The other part of the wastewater system will be laid on the roads collecting wastewater by gravity to the collector.

6.2.4 Conceptual Wastewater Treatment Plan

For the wastewater flow system the following design criteria are used:

Table 11: Wastewater design criteria

Indication	Value	
	Summer	Winter
Population	124,369	62,480
Water return to waste water treatment	80%	80%
Infiltration	20 %	20 %
Peak flow	723 l/s	365 l/s
Per capita BOD contribution	55g	55g
Waste water BOD (mg/l)	300	300
Waste water suspended solids, (mg/l)	250	250
Waste water ammonia, (mg/l)	35	35
Waste water Phosphorus, (mg/l)	10	10
Waste water faecal coliform, (No per 100 ml)	5.00E+07	1.00E+08
Design temperature	19°C	10°C

Booz Allen Hamilton, 2003

Site of the WWTP

There is no suitable location for a WWTP in the immediate vicinity of Saranda. Previous studies indicate that the most possible site will be to the southeast, nearby lake Butrinti. This is the region where the planned channel to Çuka will discharge the wastewater.

Method of Treatment

Based on site conditions, minimal investment and operational costs, and the lack of any WWTP within Albania, an Aero-fac Lagoon system may be the most feasible approach. Compared to other methods (e.g., activated sludge, extended aeration, aerated lagoons, trickling filters, anaerobic digestion, reed beds and land application) the Aero-fac Lagoon system has lower construction costs and continued operation and maintenance is also moderate.

The Components of the Aero-fac Lagoon System may include:

Stabilisation Pond

Primary facultative pond,

Surface loading	235 Kg /ha d at 19°C
Surface loading	100 Kg /ha d at 10°C
Depth	1.8 m
BOD removal	0.184 at 10 °C

Maturation ponds

Permissible maturation pond surface organic loading not grater than 75 of the facultative pond loading,

Minimum retention time in each pond	3 days
Depth	1.5 m

25 % removal of BOD in each pond

Dimensions for each of 8 series will be:

Facultative	123x400 m
First Maturation	123x99 m
Second maturation	123x48 m
Third maturation	123x48 m

Aero- Fac lagoons

Minimum DO in Lagoon Water	2 mg/l
Winter BOD removal rate constant	0.14
Summer BOD removal rate constant	0.30
Oxygen transfer efficiency	1.5 kg per kg BOD
Factors for field oxygen transfer	alpha-0.9, beta-0.95
Pond water depth	2.44 m
Retention time in each lagoon	13.5 days
Primary cell effluent BOD	55/67 mg/l (summer/winter)
Secondary cell effluent BOD	<20 mg/l (summer/winter)

Total lagoon area required is 288000 m2 with an area per lagoon 28800 m2.
The aeration equipment includes: Aero-fac diffuser bridge modules, centrifugal fan blowers systems and related control panels, + Las Mark 3 wind/electric mixers. The number of the modules in each cell is as follows:

Each primary lagoon	2x35 kW blower + 16 LAS mixers
Each secondary lagoon	1x 15 kW blower + 10 LAS mixers

Inlet and Out fall to WWTP

The distance from the proposed location for the WWTP to the end of collector system at Çuka Channel is about 2 km. Wastewater will flow by gravity from the end of the two collectors to the proposed site of the waste water treatment plant. The effluent from the WWTP can be discharged at Bistrica river, about 400 m near by the site.

The plans for the WWTP have been included in Appendix F. Map 3 presents the existing wastewater network.

6.3 Wastewater System Development Phases

6.3.1 Population Projection

According to the urban planning study are given the areas where the town will be developed and the population during the winter and summer time. For each five years, 2005, 2010 and 2015 are present the areas that will be developed. Based on:

- The idea for the town development each 5 years and
- The population for all the areas studied.

Table 12: Population Projection

No	Study Name	2002			2005			2010			2015		
		Area from total	Population		Area from total	Population		Area from total	Population		Area from total	Population	
			Permanent	Temporary		Perm.	Temp.		Perm.	Temp.		Perm.	Temp.
1	Zone 3	0.1	75.8	47.2	0.35	265.3	165.2	0.65	492.7	306.8	1.0	758	472
2	Çuka	0.15	2046.3	1273.5	0.35	4774.7	2971.5	0.65	8867.3	5518.5	1.0	13642	8490
3	Studimi 4				1.0	739	460	1.0	739	460	1.0	739	460
4	Saranda	0.95	27550	38950	1.0	27550	38950	1.0	29000	41000	1.0	29000	41000
5	Studimi 2		0	0		0	0	1.0	1225	751	1.0	1225	751
6	Zone 1		0	0	1.0	1958	1252	1.0	1958	1252	1.0	1958	1252
7	Studimi 5		0	0		0	0	1.0	994	652	1.0	994	652
8	Studimi 6		0	0	0.6	1584.6	997.2	1.0	2641	1662	1.0	2641	1662
9	Studimi shtese		0	0		0	0		0	0	1.0	1370	863
10	Qafe Dradha		0	0		0	0	1.0	940	574	1.0	940	574
11	Studimi 3		0	0	0.5	927.5	570.5	0.8	1484	912.8	1.0	1855	1141
12	Studimi 8		0	0		0	0	0.5	201.5	119.5	1.0	403	239
13	Studimi 7		0	0	0.5	353.5	223	1.0	707	446	1.0	707	446
14	Factory		0	0									
15	Zone 2		0	0	1.0	2657	1635	1.0	2657	1635	1.0	2657	1635
16	Studimi 1		0	0	0.5	1795.5	1126	1.0	3591	2252	1.0	3591	2252
17	**Total**		**29672**	**40271**		**42605**	**48350**		**55498**	**57542**		**62480**	**61889**

Booz Allen Hamilton, 2003

According to these population figures, town population will be 62480 at year 2017, i.e. with a growth rate 5.08% per annum that appears aggressive. These figures present the capacity of the areas in the urban development studies, not the occupancy of the areas. Based on a more representative population increase for cities within Albania, the population is actually expected to be significantly less.

In order to find out the population and investments needed for the wastewater system we have assumed:

1. The constructions in each of the areas presented in the urban development studies will start as is shown in the map (for the each five years are shown the areas that will be developed and,
2. That the population (permanent population) for all areas will be increased with an annual growth rate 3%. This annual growth rate is taken into account for the emergency measures works and is the most common used as high scenario in Albanian towns.

As conclusions based on the above assumptions, the constructions will take place in all areas on year 2017, but these areas will not be occupied 100 %. The areas will be fully occupied on year 2027.

As base population is taken the current population 29672 inhabitants. According to this assumption the population of 62480 inhabitants could be met at year 2027..

In order to find out the summer time population we are based in the following data:

1. Existing summer time population is 10,000 as was estimated last summer;
2. The summer time population of 61,889 can be met at year 2027 at the same time as the permanent population of 62,480 inhabitants.
3. The increase of the summer population will be with a constant growth rate from today to the 61,889 at year 2027.

In the following table is shown the population during the years for winter and summer time based on the above mentioned criteria.

Table 13: Population Projection for the Out-Years

Population Data	Years					
	2002	**2007**	**2012**	**2017**	**2022**	**2027**
Permanent population, Growth rate 3% per annum	29,672	34,398	39,877	46,228	53,591	62,480
Summer population assuming a constant increase per annum	10,000	14,398	20,732	29,851	42,982	61,889
Total Population	39,672	48,796	60,609	76,079	96,573	124,369

Booz Allen Hamilton, 2003

6.3.2 Sewer Flow During the Out-Years

The design wastewater flows for different years were developed using design criteria shown in the previous paragraphs and the population increase during the out-years. These wastewater flows are shown in the following table.

Table 14: Sewer Flow Data

Sewer Flow Data	Year					
	2002	**2007**	**2012**	**2017**	**2022**	**2027**
Total Population	39672	48796	60609	76079	96573	124369
Average wastewater flow calculated for 157 l/c/d, as 80 % of water consumption, l/s	72	89	110	138	175	226
Maximum waste water flow, 3 times average flow, l/s	216	266	330	415	526	678
Infiltration, 20 %, l/s	14	18	22	28	35	45
Design sewer flow, l/s	**231**	**284**	**352**	**442**	**562**	**723**

Booz Allen Hamilton, 2003

The sewer flows developed are based on the assumption that the all the areas will be occupied by 2027. The maximum estimated flow (2027) was used for the basic specifications for wastewater treatment and for sizing the main sewer pipes from Çuka channel to wastewater treatment site.

The maximum estimated flow was also used for sizing the wastewater collection system.

As with the water supply system, the wastewater pipelines will be installed during different phases. The assumption made for this report and design was that the sewer pipes for a certain area will be constructed according to the sizing for a complete population occupancy (2027 year) even though it will be a number of years before the occupancy level is reached. The following table presents the calculated wastewater flows for all the areas based on projected development status by year.

Table 15: Wastewater Flows

Nr	Study Name	Design Wastewater Flow, l/s, for the Areas Developed		
		After five years (2007)	After ten years (2012)	After fifteen years (2017)
1	Zone 3	2.5	4.6	7.2
2	Çuka	45.0	83.6	128.7
3	Studimi 4	7.0	7.0	7.0
4	Saranda	386.6	406.9	406.9
5	Studimi 2	0.0	11.5	11.5
6	Zone 1	18.7	18.7	18.7
7	Studimi 5	0.0	9.6	9.6
8	Studimi 6	15.0	25.0	25.0
9	Studimi shtese	0.0	0.0	13.0
10	Qafe Dradha	0.0	8.8	8.8
11	Studimi 3	8.7	13.9	17.4
12	Studimi 8	0.0	1.9	3.7
13	Studimi 7	3.4	6.7	6.7
14	Factory	0.0	0.0	0.0
15	Zone 2	25.0	25.0	25.0
16	Studimi 1	17.0	34.0	34.0
TOTAL, l/s		**447**	**622**	**728**

Booz Allen Hamilton, 2003

As is mentioned, the interceptor (collector) under construction will take all the lower part of the area, 250 l/s. For the higher part will serve a new collector of the high part. The parts of this new collector that will serve for high part will be DN-400, DN-600 and DN- 800 respectively, 1700, 2300 and 3250 m long. The lateral sewer pipes ranging from DN-300 to DN-400 will discharge to this interceptor. The dimensioning of the last part of the collector is made for sewer flow 480 l/s (DN-800, slope 2 per thousand an 75 % full), based on the total sewer flow for the year 2027 and on the fact that the collector of the low part is calculated for 250 l/s. Çuka channel is under the renovation with capacity 130 l/s and can be used for 250 l/s if the pipe will be put under pressure. However, if Çuka channel will not be under pressure the collector of high part can carry the rest of sewer flow increasing the slope from 2 to 2.8 per thousand.

Map 8 presents the proposed wastewater system for Saranda and the surrounding area. Based on the current situation of the wastewater system in Saranda the following investment must take place to improve the existing situation and to serve for the future.

2002-2007

1. <u>Construction of the sewer pipes on the northwest of the town</u>

This sewer pipe will collect wastewater from the northwest part of the town and will discharge by gravity to the "Collector" DN-400. This sewer pipe will be DN-300 and 1300 m long.

2. Construction of the sewer pipe on the southwest part of the town

This sewer pipe will collect wastewater from the southwest part of the town and will discharge by gravity to the existing sewer pipe DN-400 that discharge to the "Collector" DN-600. The existing sewer pipe DN-400 is included in the emergency works and will be renovated and cleaned. This sewer pipe will be DN-300 and 1100 m long.

3. Construction of the sewer pipe on the southeast part of the town

This sewer pipe will collect wastewater from the southeast part of the town and will discharge by gravity to the wastewater pumping station. This sewer pipe will be laid in parallel with the rising main that is under construction. The service area of this pipe will be the area between the road to Çuka and the new collector the high part. This sewer pipe will be DN-300 and 1100 m long.

4. Construction of interceptor, "Collector" of the high part of the town

The construction of the high part collector made of sewer pipes DN-400, DN-600 and DN-800, 1,700m, 2,300m and 3,250 m long respectively. This construction will have two possibilities:

- The construction of interceptor will be made from the beginning to the end as is present above, DN-400, DN-600 and DN- 800, long 1700m, 2300m and 3250 m respectively or,
- The construction will be partially only DN-400, DN-600, 1700m, 2300m long respectively that means that this pipe will discharge waste water at the waste water pumping station that serve for low part till. In this case will be needed 520 m sewer pipe., DN-600 to make the connection of higher part to waste water pumping station.

In the first case the cost of the investment will be higher, while in the second case a increase of the capacity of the waste water pumping station will be needed. The capacity increase of the pumping station is recommended in the emergency works and seems to be more reasonable. In this case additional pumps will installed at the outlet pipe. As the investment will done step by step an assessment must be taken before the investment will start.

5. The construction of lateral sewer pipes that will serve for the respective developed areas, i.e. DN-300, 650 m in the existing Saranda town, 3500 m, DN-300 and 2400 m DN-400 in the new areas.

2007-2012

1. Construction of the first main sewer pipe from Çuka discharge point to the waste water plant waste water capacity 450 l/s and,

2. Construction of the wastewater plant with a capacity 450 l/s that will serve for the year 2017. In this case 5 sections of natural lagoons(451 l/s) or 3 sections of aero-fac lagoons (434 l/s).

3. Construction of interceptor the last part of collector of high part 3200 m DN-800 if the second option of the investment of the year 2002-2207 is approved.

4. The construction of lateral sewer pipes that will serve for the respective developed areas, i.e. 6700 m, DN-300 and 200 m DN-400 in the new areas.

2012-2017

1. Construction of the second main sewer pipe from Çuka discharge point to the waste water treatment plant, capacity 280 l/s and,

2. Extension of waste water treatment plant with 1 sections of natural lagoons (6 sections total, 542 l/s) or one section of aero-fac lagoon (4 sections total, 582 l/s).

3. Finish the construction of all lateral sewer pipes, for the respective developed areas, i.e. 2900 m, DN-300 and 200 m DN-400 in the new areas.

2017-2022

2.
Extension of waste water treatment plant with 1 section of natural lagoons(8 section total, 728 l/s) or one section of aero-fac lagoon (5 section total. 728 l/s).

7.0 SUMMARY AND CONCLUSIONS

7.1 GIS and Map Framework

The geographic base map that is used for this project has an excellent level of accuracy and the electronic files have been designed to maximize their flexibility. The database can be updated digitally through software that is in common usage, EXEL, however, use of GIS software, ArcView, will maximize the system capabilities.

The maps developed for this project include a base map of the city, urban development maps for 5, 10, and 15 year planning, water and wastewater infrastructure maps for current infrastructure as well as 5, 10, and 15 year infrastructure expansion, and water demand maps for current, 5, 10, and 15 year population estimates.

The maps and database can also be used for studies in other fields of municipal activity. Examples include: management of road investments, development of urban studies, development of property address system, modernization of electrical services, etc.

7.2 Urban Development

There are currently 16 urban plans that address development in various parts of the area surrounding the city. The planned development is expected to be implemented over the next twenty years (2002-2022) and will significantly increase the size of the city.

Saranda currently has a population of approximately 29,000 residents. The Local Government does not have precise population data for either the city or the surrounding developing areas. Officials with the Local Government also must estimate population growth during the summer tourist season. According to them, population in summer increases the number of residents to between 70 and 75 thousand. Over the next 15 years, 5 development phases are expected. The resulting capacity of Saranda is estimated at 124,300, which will more than double the permanent resident population.

In support of the planned development, the Local Government has already completed the land sale for execution of the approved plans. These projects are still conceptual and do not have substantial details regarding aspects such as construction of roads and other infrastructure networks. There are also already requests from the community for additional land development that is outside the borders of the existing planned development. The emphasis is along the coast and intended to expand the tourist industry.

7.3 Water Infrastructure

Saranda is currently supplied by water from two sources (i) The source at Navarice (30-70 l/s); and (ii) Vrioni well field (140 l/s). The water quality from both sources complies with EU standards for drinking water.

The required production capacity within 15 years is approximately 282 l/s, which exceeds the current available water supply. An evaluation of alternative water resources indicates that

expansion of the Vrioni well field is sufficient to cover the present and longterm water demand through the year 2018, but should be evaluated for safe yield before a final determination is made.

The topography of Saranda varies between 5 m a.s.l. and 175 m asl. Under the present conditions, no pressure zoning is applied, which is causing very high pressures in the lower part of the city and very low pressure in the high parts. As a result, there is unequal distribution of water with frequent shortages in the high part and wastage in the low parts. To minimize the pressure variations and facilitate distribution, the city was divided into five pressure zones according to elevation.

Four new reservoirs are recommended, one each to supply the three new pressure zones and the fourth to combine with Reservoir 1 in supplying the existing municipal area.

7.4 Wastewater Infrastructure

The wastewater system in Saranda has been out of service and directly discharging to the bay for several years. The recent and ongoing activity for the emergency works will alleviate many of the problems associated with the existing system, but it does not address expansion of the system into many of the currently occupied areas that do not have sewerage.

Historically, standard system maintenance (e.g. cleaning the lines) has not occurred and the municipality does not currently have the equipment to initiate a full maintenance program. Other difficulties are associated with manholes for pipeline access. They are frequently either paved over or damaged by vehicular traffic.

Plans for modernizing the existing system and expanding it for planned urban development were developed based on existing available system information as well as population projections.

The sewer flows developed are based on the assumption that the all the areas will be occupied by 2027. For calculations and sizing, the maximum estimated flow (728 l/s) was used for the basic specifications for wastewater treatment and for sizing the main sewer pipes from Çuka channel to wastewater treatment site.

The existing channel to Çuka has sufficient capacity for only the lower portion of the city (lower collector). Addition of new trunk lines and connections for other areas may exceed the capacity of the channel during peak flow conditions resulting in the overflow being discharged into the bay. As a result, a construction of a second connector has been built into this report and is included on Map 8. In addition to the second collector, another channel or conveyance will be necessary to transport the wastewater from the second collector to Çuka canal.

Given the volume of wastewater projected, some means of wastewater treatment should be considered. A basic design and specifications for Aero-floc lagoons have been included in this report. This represents one of many treatment options, but has the advantage that it is relatively low cost and has moderate operational and maintenance requirements.

APPENDIX A – CLIMATIC DATA

Table 16: Sunshine Data

Months												
I	II	III	IV	V	VI	VII	VIII	IX	X	XII	XII	Ann.
Sunshine hours												
123	138	164	206	271	308	257	331	246	199	130	110	2583
Sunshine days												
25	24	27	28	30	30	31	31	29	29	25	24	333

Booz Allen Hamilton, 2003

Average air temperature is 17.6 °C. Air temperatures are present in the following table.

Table 17: Air temperatures °C

Months												
I	II	III	IV	V	VI	VII	VIII	IX	X	XII	XII	Ann.
Monthly average air temperature (many years average)												
9.8	10.2	12.5	15.4	19	23.1	25.6	25.9	23.6	19.6	15.3	11.8	17.6
Maximum absolute												
19.6	21.6	27.2	27.3	31.9	35.6	36.6	40.2	34.7	30.2	25.6	22.2	40.2
Minimum absolute												
-4.6	-2.5	1.5	2.9	7.7	12.4	15.6	14.2	12.4	10.0	3.6	-1.5	-4.6
Average of monthly maximums												
17.3	18.6	21.4	24.5	28.5	32.3	34.1	34.6	32.6	27.8	23.3	19.7	35.3
Average of monthly minimum												
0.7	2.1	4.0	7.3	10.8	15.0	18.4	18.8	15.8	12.2	7.0	3.7	-0.5

Booz Allen Hamilton, 2003

Table 18: Wind data

Season	Wind direction distribution in percentage								
	Q	N	NE	E	SE	S	SW	W	NW
Winter	5.8	10.8	43.5	9.3	9.0	10.8	4.3	3.7	2.8
Spring	11.8	7.6	28.2	1.4	8.1	11.0	12.6	9.3	3.0
Summer	24.2	3.4	15.0	6.4	8.9	9.1	20.7	9.9	2.4
Autumn	9.8	8.3	39.1	8.2	6.6	9.5	12.0	4.7	1.7
Annual	12.4	7.6	31.5	8.1	8.2	10.1	12.4	6.9	2.5

Booz Allen Hamilton, 2003

Table 19: Maximum wind velocity m/s

Season	V, m/s
Winter	3.9
Spring	3.4
Summer	3.0
Autumn	3.6
Annual	3.4

Booz Allen Hamilton, 2003

Table 20: Annual average wind velocity, m/s for the different direction

Direction	Q	N	NE	E	SE	S	SW	W	NW
Velocity, m/s		3.5	3.7	3.0	3.0	3.7	4.2	4.9	3.3

Booz Allen Hamilton, 2003

Table 21: Average monthly precipitation, mm

Months												
I	II	III	IV	V	VI	VII	VIII	IX	X	XII	XII	Ann.
Average monthly precipitation mm												
234	164	134	90	62	31	13	20	93	164	254	250	1509

Booz Allen Hamilton, 2003

Table 22: Annual precipitation, mm, for different security, %

1	5	10	20	30	40	50	60	70	80	90	95	99
2060	1870	1760	1640	1560	1485	1420	1360	1300	1220	1120	1033	877

Booz Allen Hamilton, 2003

Table 23: Average number of days with rain

Months												
I	II	III	IV	V	VI	VII	VIII	IX	X	XII	XII	Ann.
Rainfall less or equal to 0.1 mm												
15.3	12.9	12.3	9.6	7.8	4.4	1.4	2.2	5.5	10.3	15.9	15.9	113.5
Rainfall more or equal to 5 mm												
9.3	7.8	5.6	4.4	3.2	1.4	0.4	1.1	3.6	5.9	10.7	9.7	63.1
Rainfall more or equal to 10 mm												
6.4	5.6	3.9	2.3	2.1	1.1	0.2	0.6	2.4	4.4	7.8	6.8	43.6

Booz Allen Hamilton, 2003

Table 24: Relative humidity

Months												
I	II	III	IV	V	VI	VII	VIII	IX	X	XII	XII	Ann.
60	62	63	65	66	63	61	60	60	61	67	65	63

Booz Allen Hamilton, 2003

APPENDIX B – SCHEMATIC OF RESERVOIR SYSTEM

Figure 7:

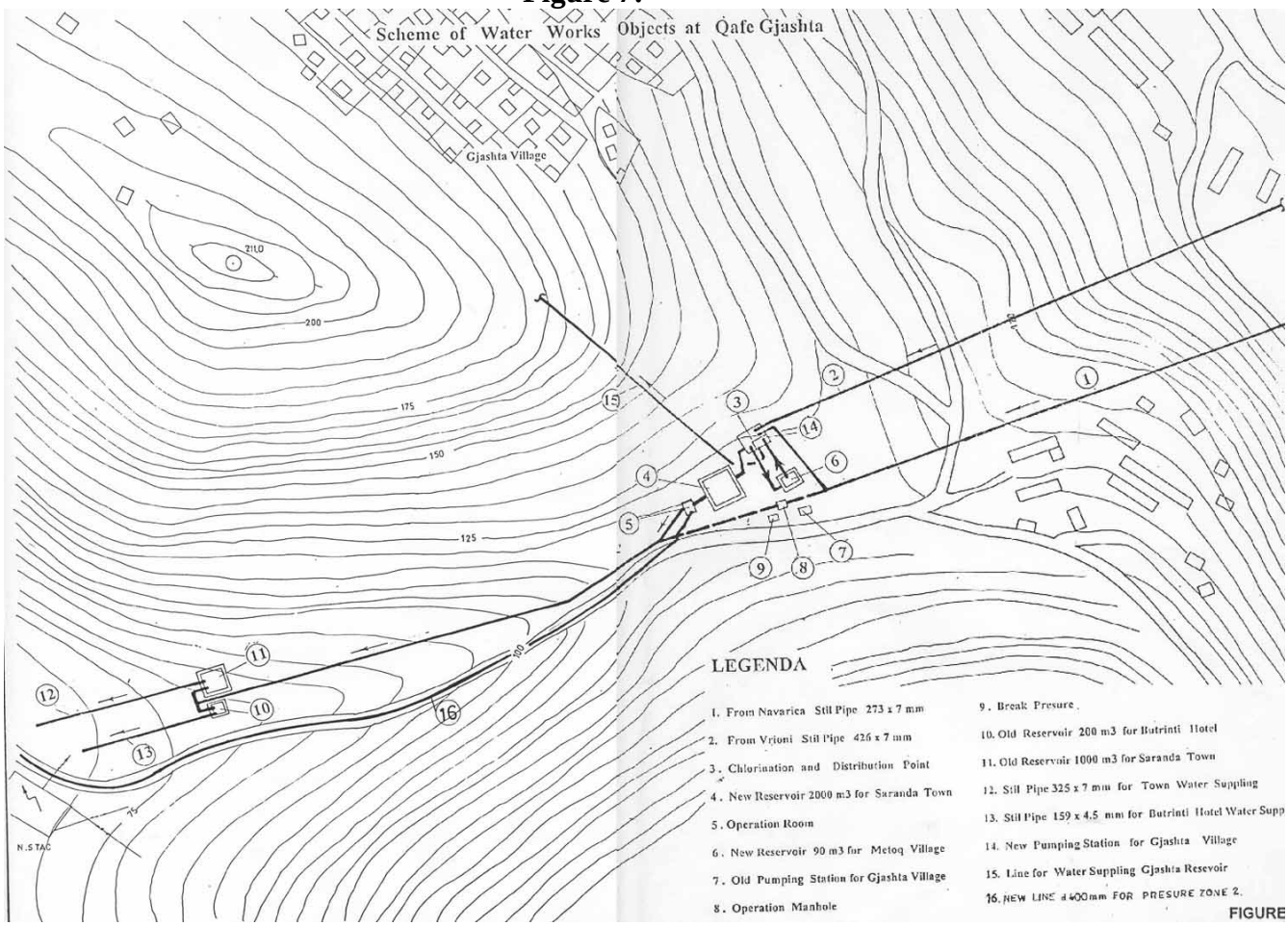

Booz Allen Hamilton, 2003

APPENDIX C – CALCULATED WATER DEMAND

Table 25

	Surface Area (hc)	Population Density (No.People/hectare)	Node Habitants Served	Population Water Demand (l/s)	Tourist Staying With Family (#/ha)	Node Tourists Served (25 yr scenario)	Water Demand Per Node for 15 yr=55% 0f 25 yr	Tourists in Hotel	Water Demand for Tourists in Hotel	Total Water Demand per Node (l/s)
1			0	0.00	0	200	0.57		0.00	0.57
2	1.2	150	180	0.53	201	241	0.38		0.00	0.91
3	4	200	800	2.34	268	1072	1.71		0.00	4.04
4	3.7	150	555	1.62	201	744	1.18		0.00	2.80
5	4.7	250	1175	3.43	335	1475	2.35	100	0.24	6.02
6	5.6	250	1400	4.09	335	1876	2.99		0.00	7.07
7	4.1	250	1025	2.99	335	1374	2.19		0.00	5.18
8	3.3	250	825	2.41	335	1106	1.76		0.00	4.17
9	4.5	250	1125	3.28	335	1508	2.40		0.00	5.68
10	3.5	250	875	2.55	335	1173	1.87		0.00	4.42
11	7.5	250	1875	5.47	335	2513	4.00		0.00	9.47
12	2.8	250	700	2.04	335	938	1.49		0.00	3.54
13	2.2	250	550	1.61	335	737	1.17		0.00	2.78
14	8.4	250	2100	6.13	335	2814	4.48		0.00	10.61
15	3.5	250	875	2.55	335	1173	1.87		0.00	4.42
16	3	250	750	2.19	335	1005	1.60		0.00	3.79
17	6.2	250	1550	4.53	335	2077	3.31		0.00	7.83
18	2.2	250	550	1.61	335	737	1.17		0.00	2.78
19	3.7	250	925	2.70	335	1240	1.97		0.00	4.67
20	5.6	250	1400	4.09	335	1876	2.99		0.00	7.07

21	5.6	250	1400	4.09	335	1876	2.99		0.00	7.07
22	7	88	616	1.80	117.92	825	1.31		0.00	3.11
23	19	88	1672	4.88	117.92	2140	3.41	100	0.24	8.53
24	20	88	1760	5.14	117.92	2258	3.59	100	0.24	8.97
25	1.2	88	105.6	0.31	117.92	142	0.23		0.00	0.53
101	3	88	264	0.77	117.92	354	0.56		0.00	1.33
102	3	88	264	0.77	117.92	354	0.56		0.00	1.33
103	5	88	440	1.28	117.92	390	0.62	200	0.48	2.38
104	3	88	264	0.77	117.92	354	0.56		0.00	1.33
105	2.5	88	220	0.64	117.92	295	0.47		0.00	1.11
106	4.3	88	378.4	1.10	117.92	507	0.81		0.00	1.91
107	3.7	88	325.6	0.95	117.92	436	0.69		0.00	1.65
108	4.5	88	396	1.16	117.92	331	0.53	200	0.48	2.16
109	5.9	88	519.2	1.52	117.92	696	1.11		0.00	2.62
110	2.2	88	193.6	0.57	117.92	259	0.41		0.00	0.98
111	8.3	88	730.4	2.13	117.92	879	1.40	100	0.24	3.77
2			0	0.00	0	200	0.32		0.00	0.32

42	2.2	88	193.6	0.57	70	155	0.25		0.00	0.81
43	2.2	88	193.6	0.57	70	155	0.25		0.00	0.81
44	2.2	88	193.6	0.57	70	155	0.25		0.00	0.81
45	7	120	840	2.45	96	672	1.07		0.00	3.52
46	3.3	120	396	1.16	96	317	0.50		0.00	1.66
47	5.2	120	624	1.82	96	499	0.79		0.00	2.62
48	6	200	1200	3.50	160	960	1.53		0.00	5.03
49	4	200	800	2.34	160	640	1.02		0.00	3.35
50	2	110	220	0.64	88	76	0.12	100	0.24	1.00
51	2.5	110	275	0.80	88	220	0.35		0.00	1.15
52	3.1	110	341	1.00	88	273	0.43		0.00	1.43
53	1.5	110	165	0.48	88	132	0.21		0.00	0.69
54	2.1	110	231	0.67	88	185	0.29		0.00	0.97
55	2.5	120	300	0.88	96	240	0.38		0.00	1.26
56	4	120	480	1.40	96	384	0.61		0.00	2.01
57	5.4	120	648	1.89	96	518	0.83		0.00	2.72
58	2.4	120	288	0.84	96	230	0.37		0.00	1.21
59	1.8	80	144	0.42	64	115	0.18		0.00	0.60
60	4.8	70	336	0.98	56	269	0.43		0.00	1.41
61	0.9	70	63	0.18	56	50	0.08		0.00	0.26
62	6.1	70	427	1.25	56	242	0.38	100	0.24	1.87
63	2.1	70	147	0.43	56	18	0.03	100	0.24	0.70
64	3	70	210	0.61	56	168	0.27		0.00	0.88
65	1.2	70	84	0.25	56	67	0.11		0.00	0.35
66	1.5	70	105	0.31	56	-16	-0.03	100	0.24	0.52
67	1.5	70	105	0.31	56	84	0.13		0.00	0.44
68	1.2	70	84	0.25	56	67	0.11		0.00	0.35
120	4.7	90	423	1.24	72	338	0.54		0.00	1.77
121	2.1	90	189	0.55	72	151	0.24		0.00	0.79
122	6.3	90	567	1.66	72	454	0.72		0.00	2.38
123	7.5	90	675	1.97	72	440	0.70	100	0.24	2.91
124	4.5	90	405	1.18	72	224	0.36	100	0.24	1.78
125	4.5	90	405	1.18	72	324	0.52		0.00	1.70

126	3.5	60	210	0.61	48	168	0.27		0.00	0.88
127	3	60	180	0.53	48	144	0.23		0.00	0.75
128	2.2	60	132	0.39	48	106	0.17		0.00	0.55
129	3.1	60	186	0.54	48	149	0.24		0.00	0.78
130	1.2	60	72	0.21	48	58	0.09		0.00	0.30
131	2	60	120	0.35	48	-4	-0.01	100	0.24	0.58
201	3.1	80	248	0.72	48	149	0.24		0.00	0.96
220	0.7	80	56	0.16	48	34	0.05		0.00	0.22
221	1.5	80	120	0.35	48	72	0.11		0.00	0.46
222	1.7	80	136	0.40	48	82	0.13		0.00	0.53
223	1.4	80	112	0.33	48	67	0.11		0.00	0.43
224	2.6	80	208	0.61	48	125	0.20		0.00	0.81
225	2.9	80	232	0.68	48	139	0.22		0.00	0.90
226	4	80	320	0.93	48	192	0.31		0.00	1.24
227	3.8	80	304	0.89	48	182	0.29		0.00	1.18
228	4.5	80	360	1.05	48	216	0.34		0.00	1.39
229	4	80	320	0.93	48	192	0.31		0.00	1.24
230	7	80	560	1.64	48	336	0.53		0.00	2.17
231	4.5	80	360	1.05	48	216	0.34		0.00	1.39
232	2.2	80	176	0.51	48	106	0.17		0.00	0.68

233	3.6	80	288	0.84	48	173	0.28		0.00	1.12
234	5.4	80	432	1.26	48	259	0.41		0.00	1.67
235	2.2	80	176	0.51	48	106	0.17		0.00	0.68
236	3.2	80	256	0.75	48	154	0.24		0.00	0.99
237	1.4	80	112	0.33	48	67	0.11		0.00	0.43
238	2.2	80	176	0.51	48	106	0.17		0.00	0.68
202	0.9	80	72	0.21	48	43	0.07		0.00	0.28
203	2.4	80	192	0.56	48	115	0.18		0.00	0.74
204	4.4	80	352	1.03	48	211	0.34		0.00	1.36
205	1.8	80	144	0.42	48	86	0.14		0.00	0.56
206	3.2	80	256	0.75	48	154	0.24		0.00	0.99
207	3	80	240	0.70	48	144	0.23		0.00	0.93
208	2.1	80	168	0.49	48	101	0.16		0.00	0.65
209	4	80	320	0.93	48	192	0.31		0.00	1.24
210	3.8	80	304	0.89	48	182	0.29		0.00	1.18
211	2.4	80	192	0.56	48	115	0.18		0.00	0.74
212	4.5	80	360	1.05	48	216	0.34		0.00	1.39
3	0	0	0	0.00	0	192	0.31		0.00	0.31
301	0	80	0	0.00	48	0	0.00		0.00	0.00
321	1.4	80	112	0.33	48	67	0.11		0.00	0.43
322	0.8	80	64	0.19	48	38	0.06		0.00	0.25

323	1.2	80	96	0.28	48	58	0.09		0.00	0.37
324	2.5	80	200	0.58	48	120	0.19		0.00	0.77
325	2	80	160	0.47	48	96	0.15		0.00	0.62
326	3.2	80	256	0.75	48	154	0.24		0.00	0.99
327	1.2	80	96	0.28	48	58	0.09		0.00	0.37
328	3.6	80	288	0.84	48	173	0.28		0.00	1.12
329	4.8	80	384	1.12	48	230	0.37		0.00	1.49
330	3.8	80	304	0.89	48	182	0.29		0.00	1.18
331	4.1	80	328	0.96	48	197	0.31		0.00	1.27
332	4.4	80	352	1.03	48	211	0.34		0.00	1.36
333	4.5	80	360	1.05	48	216	0.34		0.00	1.39
334	2.6	80	208	0.61	48	125	0.20		0.00	0.81
335	2.3	80	184	0.54	48	110	0.18		0.00	0.71
336	10.5	80	840	2.45	48	504	0.80		0.00	3.25
337	3.6	80	288	0.84	48	173	0.28		0.00	1.12
338	3.6	80	288	0.84	48	173	0.28		0.00	1.12
302	3.2	80	256	0.75	48	154	0.24		0.00	0.99
303	3	80	240	0.70	48	144	0.23		0.00	0.93
304	2.8	80	224	0.65	48	134	0.21		0.00	0.87
305	2.2	80	176	0.51	48	106	0.17		0.00	0.68
306	3.4	80	272	0.79	48	163	0.26		0.00	1.05
307	4.1	80	328	0.96	48	197	0.31		0.00	1.27
308	2	80	160	0.47	48	96	0.15		0.00	0.62

309	2.2	80	176	0.51	48	106	0.17		0.00	0.68
310	1.1	80	88	0.26	48	53	0.08		0.00	0.34
420	0.8	80	64	0.19	48	38	0.06		0.00	0.25
421	1.2	80	96	0.28	48	58	0.09		0.00	0.37
422	1.2	80	96	0.28	48	58	0.09		0.00	0.37
423	3	80	240	0.70	48	144	0.23		0.00	0.93
424	1.7	80	136	0.40	48	82	0.13		0.00	0.53
425	5	80	400	1.17	48	240	0.38		0.00	1.55
426	4.4	80	352	1.03	48	211	0.34		0.00	1.36
427	3.6	80	288	0.84	48	173	0.28		0.00	1.12
428	3.6	80	288	0.84	48	173	0.28		0.00	1.12
429	5.2	80	416	1.21	48	250	0.40		0.00	1.61
430	2	80	160	0.47	48	96	0.15		0.00	0.62
431	4	80	320	0.93	48	192	0.31		0.00	1.24
432	4	80	320	0.93	48	192	0.31		0.00	1.24
433	4	80	320	0.93	48	192	0.31		0.00	1.24
434	1.8	80	144	0.42	48	86	0.14		0.00	0.56
435	2.8	80	224	0.65	48	134	0.21		0.00	0.87
436	3.2	80	256	0.75	48	154	0.24		0.00	0.99
437	3.5	80	280	0.82	48	168	0.27		0.00	1.08
438	5	80	400	1.17	48	240	0.38		0.00	1.55
439	4.5	80	360	1.05	48	216	0.34		0.00	1.39
401	0	80	0	0.00	48	0	0.00		0.00	0.00

402	0.3	80	24	0.07	48	14	0.02		0.00	0.09
403	2.1	80	168	0.49	48	101	0.16		0.00	0.65
404	2	80	160	0.47	48	96	0.15		0.00	0.62
405	1.2	80	96	0.28	48	58	0.09		0.00	0.37
406	2.3	80	184	0.54	48	110	0.18		0.00	0.71
407	2.1	80	168	0.49	48	101	0.16		0.00	0.65
408	2.3	80	184	0.54	48	110	0.18		0.00	0.71
409	2	80	160	0.47	48	96	0.15		0.00	0.62
410	3.3	80	264	0.77	48	158	0.25		0.00	1.02
411	2.2	80	176	0.51	48	106	0.17		0.00	0.68
Number Of Residents			**62466**			**60403**		**1500**		**282.35**
Required Water Supply (l/s)				**182.39**			**96.38**		**3.58**	

Total Number of Residents	**124,369**
Total Required Water Supply	**282.35**

Booz Allen Hamilton, 2003

APPENDIX D – PROPOSED NEW RESERVOIR SCENARIO

Figure 8

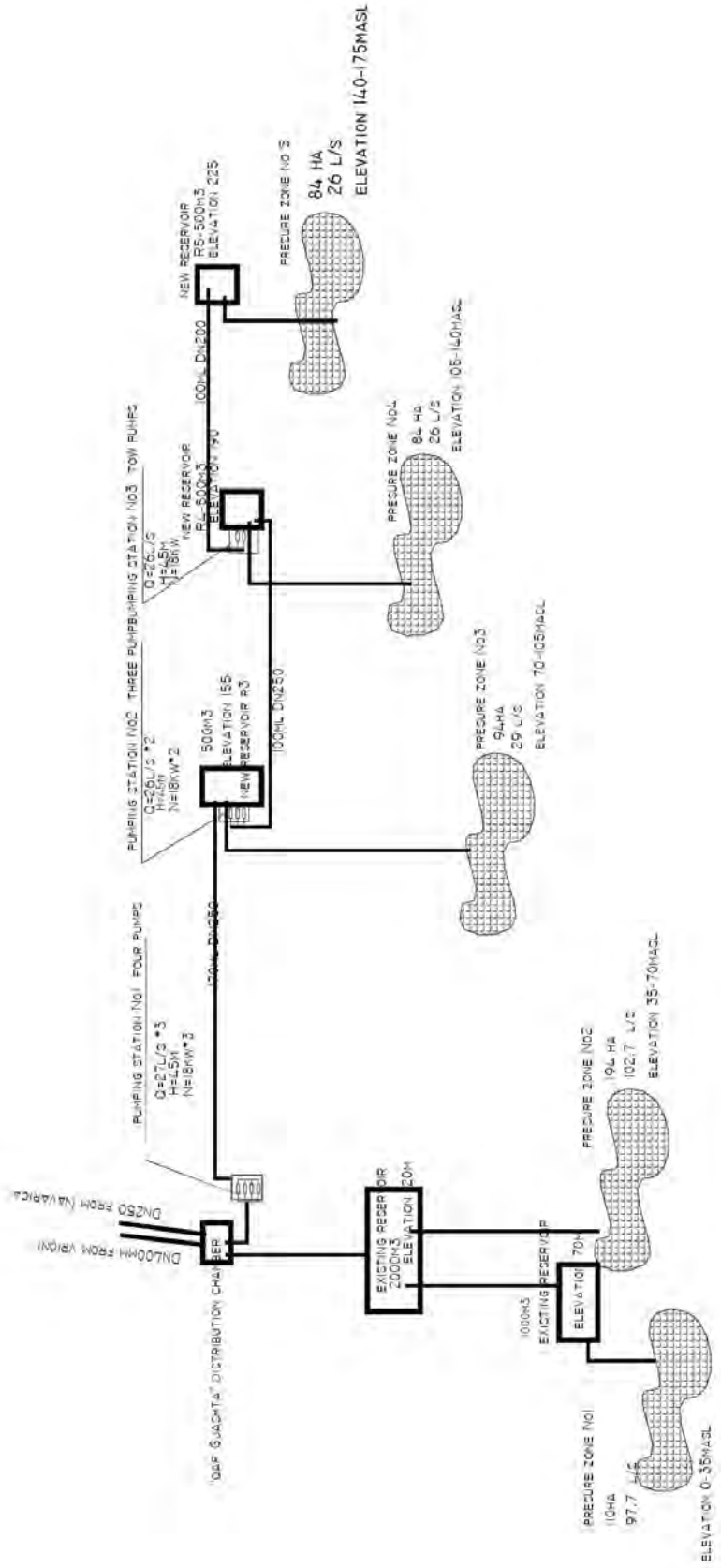

Booz Allen Hamilton, 2003

APPENDIX E – DATA OUTPUT FOR PRESSURE ZONES

Part 1: Table 26: Pipeline Data

ZONE 1

PIPE No	FROM NODE	TO NODE	LENGTH m	DIAMETER mm	HCW	FLOW l/s	VELOCITY m/s	LOW VELOCITY	HEAD LOSSES m/km	HIGH LOSSES	TOTAL LOSSES
1	1	101	936	500	120	176.00	0.90		1.78		1.67
6	101	2	41	300	120	137.54	1.95		13.59	HI	0.56
7	2	6	726	150	100	14.21	0.80		8.35		6.06
8	2	3	133	300	120	121.69	1.72		10.83	HI	1.44
9	3	5	524	150	100	14.18	0.80		8.32		4.36
10	3	4	394	300	120	100.24	1.42		7.57		2.98
11	5	6	89	150	110	8.88	0.50		2.93		0.26
12	4	5	150	150	110	16.44	0.93		9.18		1.38
13	6	7	189	150	100	10.36	0.59		4.66		0.88
14	5	8	217	150	100	10.91	0.62		5.12		1.11
15	4	9	350	300	100	78.76	1.11		6.79		2.38
16	9	8	170	150	110	3.94	0.22	LO	0.65		0.11
17	8	7	98	150	110	2.60	0.15	LO	0.30		0.03
18	7	10	310	150	100	3.64	0.21	LO	0.67		0.21
19	8	10	217	150	100	4.74	0.27	LO	1.10		0.24
20	9	11	366	300	110	30.08	0.43		0.96		0.35
21	10	11	199	150	100	0.42	0.02	LO	0.01		0.00
22	13	12	66	150	110	6.36	0.36		1.58		0.10
23	9	12	163	200	110	34.51	1.10		8.91		1.45
24	27	11	200	100	100	0.00	0.00	LO	60.00	HI	12.00
25	26	10	195	150	100	0.00	0.00	LO	10.26	HI	2.00
26	11	13	225	200	100	21.51	0.68		4.43		1.00
28	13	18	566.1	125	100	10.14	0.83		10.88	HI	6.16
29	12	19	685	200	110	34.50	1.10		8.90		6.10
31	18	19	42	150	110	5.14	0.29	LO	1.07		0.04
32	20	15	160	100	110	6.35	0.81		11.38	HI	1.82
33	15	21	427	100	110	2.39	0.30		1.87		0.80
37	19	20	368	200	110	31.23	0.99		7.40		2.72
38	20	21	500	150	110	12.15	0.69		5.24		2.62
50	101	103	401	150	110	8.69	0.49		2.82		1.13
51	101	102	298	250	120	27.38	0.56		1.67		0.50
52	102	103	135	100	110	3.94	0.50		4.70		0.64
53	103	104	594	150	110	8.35	0.47		2.62		1.56
54	102	105	613	200	110	21.04	0.67		3.57		2.19
55	105	104	64	150	110	1.24	0.07	LO	0.08		0.00
56	104	106	356	150	110	7.19	0.41		1.99		0.71
57	105	106	272	200	110	17.81	0.57		2.62		0.71
58	106	107	384	150	110	10.80	0.61		4.22		1.62
59	106	107	387	150	110	10.76	0.61		4.19		1.62
60	107	108	199	150	110	10.35	0.59		3.90		0.78
61	107	108	303	150	110	8.25	0.47		2.56		0.78
62	108	110	554	150	110	10.85	0.61		4.25		2.35
63	108	109	536	100	110	3.86	0.49		4.52		2.42
64	110	109	67	150	110	5.02	0.28	LO	1.02		0.07

65	110	111	434	100	110	4.06	0.52		4.98		2.16
66	109	111	402	100	110	4.16	0.53		5.20		2.09
67	111	112	152	80	100	1.44	0.29	LO	2.58		0.392543

ZONE 2

PIPE No	FROM NODE	TO NODE	LENGTH m	DIAMETER mm	HCW	FLOW l/s	VELOCITY m/s	LOW VELOCITY	HEAD LOSSES m/km	HIGH LOSSES	TOTAL LOSSES
2	2	120	392	400	120	184.91	1.47		5.79		2.27
70	120	42	839	400	120	157.61	1.25		4.31		3.61
71	42	43	58	300	120	132.72	1.88		12.72	HI	0.74
72	42	44	363	150	110	23.43	1.33		17.66	HI	6.41
73	43	45	455	300	120	131.26	1.86		12.46	HI	5.67
74	45	44	148	150	110	0.60	0.03	LO	0.02		0.00
75	45	47	453	300	120	124.33	1.76		11.27	HI	5.11
76	44	46	305	150	110	22.57	1.28		16.48	HI	5.03
77	46	47	232	150	110	2.73	0.15	LO	0.33		0.08
78	47	49	294	300	120	108.50	1.54		8.76		2.58
79	46	50	328	150	110	16.85	0.95		9.60		3.15
80	47	48	411	150	110	13.84	0.78		6.67		2.74
81	50	69	113	150	110	0.19	0.01	LO	0.00		0.00
82	49	48	86	150	110	7.01	0.40		1.90		0.16
83	69	52	283	300	120	95.65	1.35		6.94		1.96
84	50	54	332	150	110	14.86	0.84		7.61		2.53
85	48	51	314	150	110	11.80	0.67		4.96		1.56
86	51	52	213	150	110	9.73	0.55		3.47		0.74
87	52	53	62	300	120	102.80	1.45		7.93		0.49
88	53	56	332	300	120	97.35	1.38		7.17		2.38
89	54	55	337	150	110	17.33	0.98		10.11	HI	3.41
90	53	54	96	150	110	4.21	0.24	LO	0.74		0.07
91	56	55	105	230	130	64.25	1.55		10.45	HI	1.10
93	55	59	547	250	120	79.31	1.62		11.93	HI	6.52
92	56	60	512	200	110	29.48	0.94		6.65		3.41
94	59	22	108	200	110	90.11	2.87		52.58	HI	5.68
97	60	63	482	150	110	14.82	0.84		7.57		3.65
98	60	59	125	100	100	10.39	1.32		33.73	HI	4.22
27	11	17	447	150	100	9.63	0.55		4.07		1.82
34	22	14	397	184	130	52.06	1.96		21.00	HI	8.34
35	14	11	300	184	130	17.68	0.66		2.85		0.85
36	16	17	377	150	100	4.46	0.25	LO	0.98		0.37
40	15	16	95	130	130	11.28	0.85		6.74		0.64
41	14	15	141	130	130	15.28	1.15		11.80	HI	1.66
42	22	23	424	200	130	32.45	1.03		5.84		2.47
43	23	24	750	150	120	8.68	0.49		2.39		1.79
44	23	24	792	150	120	8.42	0.48		2.27		1.79
100	63	59	387	150	110	6.11	0.35		1.47		0.57
101	63	65	443	100	100	2.03	0.26	LO	1.64		0.73
102	63	64	494	100	100	1.92	0.24	LO	1.48		0.73
103	64	66	331	100	100	0.82	0.10	LO	0.31		0.10

104	65	67	289	100	100	0.90	0.12	LO	0.37		0.11
105	65	64	36	100	100	0.49	0.06	LO	0.12		0.00
106	67	66	73	100	100	0.11	0.01	LO	0.01		0.00
108	49	69	71	300	120	96.09	1.36		7.00		0.50
110	120	121	63	250	120	24.12	0.49		1.32		0.08
111	121	122	115	200	110	12.03	0.38		1.27		0.15
112	122	123	648	200	110	7.74	0.25	LO	0.56		0.36
113	121	124	499	200	110	10.67	0.34		1.02		0.51
114	124	123	48	200	110	2.32	0.07	LO	0.06		0.00
115	123	125	848	150	110	4.83	0.27	LO	0.95		0.81
116	124	126	757	150	110	5.14	0.29	LO	1.07		0.81
117	126	125	72	150	110	0.40	0.02	LO	0.01		0.00
118	126	127	296	100	100	3.15	0.40		3.72		1.10
119	125	128	606	100	100	2.17	0.28	LO	1.87		1.13
120	127	128	245	100	100	0.52	0.07	LO	0.13		0.03
121	127	129	426	100	100	1.29	0.16	LO	0.71		0.30
122	128	131	196	100	100	1.70	0.22	LO	1.19		0.23
123	131	129	176	100	100	0.66	0.08	LO	0.20		0.04
124	129	130	218	100	100	0.54	0.07	LO	0.14		0.03

ZONE 3

PIPE No	FROM NODE	TO NODE	LENGTH m	DIAMETER mm	HCW	FLOW l/s	VELOCITY m/s	LOW VELOCITY	HEAD LOSSES m/km	HIGH LOSSES	TOTAL LOSSES
3	3	201	402	250	110	52.61	1.07		6.56		2.64
130	201	220	86	200	110	32.78	1.04		8.10		0.70
131	220	221	59	150	110	16.05	0.91		8.78		0.52
132	220	223	259	150	110	16.33	0.92		9.06		2.35
133	221	222	252	150	110	15.23	0.86		7.96		2.01
134	223	222	37	150	110	11.57	0.65		4.79		0.18
135	222	225	461	200	110	25.84	0.82		5.22		2.40
136	223	224	556	100	110	3.98	0.51		4.80		2.67
137	225	224	20	150	110	10.92	0.62		4.30		0.09
138	225	227	668	150	110	13.31	0.75		6.20		4.14
139	224	226	642	150	110	13.44	0.76		6.32		4.06
140	226	227	66	80	110	0.10	0.02	LO	0.02		0.00
141	227	229	407	150	110	11.29	0.64		4.57		1.86
142	226	228	435	150	110	11.10	0.63		4.44		1.93
143	229	228	66	80	110	0.96	0.19	LO	1.02		0.07
144	228	231	525	150	110	9.56	0.54		3.36		1.77
145	229	230	778	150	110	8.10	0.46		2.47		1.92
146	231	230	99	80	110	0.91	0.18	LO	0.92		0.09
147	231	232	101	100	110	6.15	0.78		10.73	HI	1.08
148	230	233	684	100	110	5.10	0.65		7.57		5.18
149	232	234	591	100	110	4.93	0.63		7.12		4.21
150	233	234	42	80	110	0.68	0.13	LO	0.53		0.02
151	233	235	563	80	110	2.40	0.48		5.59		3.15
152	234	236	484	80	110	2.60	0.52		6.46		3.13
153	235	236	56	80	110	0.15	0.03	LO	0.03		0.00
154	236	238	501	80	110	0.97	0.19	LO	1.04		0.52
155	235	237	448	80	110	1.03	0.20	LO	1.16		0.52
156	237	238	69	80	110	0.25	0.05	LO	0.09		0.01
160	201	202	130	150	110	8.36	0.47		2.62		0.34
161	202	203	451	150	110	7.86	0.44		2.34		1.06
162	201	204	383	150	110	9.75	0.55		3.49		1.34
163	204	203	156	80	110	0.57	0.11	LO	0.39		0.06
164	203	205	348	150	110	7.10	0.40		1.94		0.67
165	204	206	512	150	110	6.73	0.38		1.76		0.90
167	205	206	137	80	110	1.04	0.21	LO	1.20		0.16
168	206	207	227	100	110	5.99	0.76		10.21	HI	2.32
169	205	208	335	100	110	5.04	0.64		7.42		2.49
170	207	208	48	80	110	0.29	0.06	LO	0.11		0.01
171	208	210	476	100	110	4.16	0.53		5.21		2.48
172	207	209	508	100	110	4.03	0.51		4.89		2.49
173	210	209	89	80	110	0.08	0.02	LO	0.01		0.00
174	210	211	478	80	110	1.96	0.39		3.84		1.84
175	209	212	538	80	110	1.87	0.37		3.51		1.89
176	211	212	116	80	110	0.63	0.13	LO	0.47		0.05

ZONE 4

PIPE No	FROM NODE	TO NODE	LENGTH m	DIAMETER mm	HCW	FLOW l/s	VELOCITY m/s	LOW VELOCITY	HEAD LOSSES m/km	HIGH LOSSES	TOTAL LOSSES
4	4	301	232	250	110	46.89	0.96		5.30		1.23
180	301	321	76	200	110	33.52	1.07		8.44		0.64
181	321	322	149	200	110	16.12	0.51		2.18		0.32
182	321	324	368	200	110	16.63	0.53		2.31		0.85
183	322	323	253	200	110	15.67	0.50		2.07		0.52
184	323	324	53	100	110	0.27	0.03	LO	0.03		0.00
185	324	326	419	150	110	15.51	0.88		8.23		3.45
186	323	325	461	150	110	14.73	0.83		7.49		3.45
187	326	325	36	80	110	0.03	0.01	LO	0.00		0.00
188	326	328	498	150	110	13.70	0.78		6.55		3.26
189	325	327	502	150	110	13.64	0.77		6.49		3.26
190	327	328	65	80	110	0.04	0.01	LO	0.00		0.00
191	328	330	646	150	110	11.73	0.66		4.91		3.17
192	327	329	536	150	110	12.93	0.73		5.88		3.15
193	329	330	101	80	110	0.39	0.08	LO	0.19		0.02
194	330	332	717	150	110	9.99	0.57		3.65		2.62
195	329	331	747	150	110	9.86	0.56		3.56		2.66
196	332	331	101	80	110	0.47	0.09	LO	0.27		0.03
197	332	333	471	100	110	7.07	0.90		13.88	HI	6.54
198	331	334	425	100	110	8.05	1.02		17.62	HI	7.49
199	333	334	133	80	110	2.79	0.55		7.36		0.98
200	333	335	492	80	110	1.78	0.35		3.21		1.58
201	334	335	100	100	110	4.50	0.57		6.02		0.60
202	335	336	632	100	110	5.01	0.64		7.33		4.63
203	334	336	751	100	110	4.87	0.62		6.97		5.23
204	336	338	795	80	110	1.99	0.40		3.95		3.14
205	336	337	761	80	110	2.04	0.41		4.12		3.14
206	337	338	58	80	110	0.02	0.00	LO	0.00		0.00
210	301	302	296	200	110	13.37	0.43		1.54		0.46
211	302	303	378	100	110	5.96	0.76		10.13	HI	3.83
212	302	303	421	100	110	5.63	0.72		9.09		3.83
213	303	304	47	150	110	9.92	0.56		3.60		0.17
214	304	306	560	150	110	6.86	0.39		1.82		1.02
215	304	305	503	80	110	1.49	0.30	LO	2.31		1.16
216	306	305	56	80	110	1.57	0.31		2.54		0.14
217	305	307	391	80	110	1.84	0.37		3.40		1.33
218	306	308	368	100	110	3.40	0.43		3.58		1.32
219	308	307	110	80	110	1.13	0.23	LO	1.39		0.15
220	308	309	247	80	110	1.15	0.23	LO	1.43		0.35
221	307	310	364	80	110	0.69	0.14	LO	0.55		0.20
222	310	309	92	80	110	0.07	0.01	LO	0.01		0.00

ZONE 5

PIPE No	FROM NODE	TO NODE	LENGTH m	DIAMETER mm	HCW	FLOW l/s	VELOCITY m/s	LOW VELOCITY	HEAD LOSSES m/km	HIGH LOSSES	TOTAL LOSSES
5	5	401	34	250	110	47.00	0.96		5.32		0.18
230	401	420	574	200	110	35.98	1.15		9.62		5.52
231	420	421	274	200	110	35.53	1.13		9.40		2.58
232	421	422	49	150	110	16.72	0.95		9.46		0.46
233	422	424	382	150	110	16.05	0.91		8.77		3.35
234	421	423	345	150	110	18.15	1.03		11.01	HI	3.80
235	423	424	60	80	110	0.48	0.10	LO	0.28		0.02
236	423	425	523	150	110	15.99	0.91		8.72		4.56
237	424	425	547	150	110	15.58	0.88		8.30		4.54
238	425	426	377	150	110	14.50	0.82		7.27		2.74
239	425	426	388	150	110	14.28	0.81		7.07		2.74
240	426	428	361	150	110	12.48	0.71		5.51		1.99
241	426	427	289	150	110	13.85	0.78		6.68		1.93
242	427	428	90	80	110	0.75	0.15	LO	0.65		0.06
243	428	429	562	150	110	11.21	0.63		4.52		2.54
244	427	429	587	150	110	11.09	0.63		4.43		2.60
245	429	431	453	150	110	9.84	0.56		3.55		1.61
246	429	430	407	150	110	9.57	0.54		3.37		1.37
247	430	431	46	100	110	4.12	0.53		5.12		0.24
248	431	432	435	150	110	11.73	0.66		4.91		2.14
249	430	433	433	100	110	4.33	0.55		5.59		2.42
250	432	433	25	80	110	1.38	0.28	LO	2.01		0.05
251	433	435	397	100	110	3.48	0.44		3.74		1.48
252	432	434	484	150	110	8.11	0.46		2.48		1.20
253	434	435	73	80	110	2.15	0.43		4.55		0.33
254	435	437	366	100	110	4.07	0.52		4.98		1.82
255	434	436	298	100	110	4.95	0.63		7.18		2.14
256	436	437	71	80	110	0.45	0.09	LO	0.25		0.02
257	436	438	431	80	110	2.72	0.54		7.04		3.03
258	437	439	477	80	110	2.57	0.51		6.32		3.01
259	439	438	112	80	110	0.07	0.01	LO	0.01		0.00
260	401	402	179	150	110	11.02	0.62		4.37		0.78
261	402	403	59	100	110	5.23	0.67		7.93		0.47
262	403	404	216	100	110	4.06	0.52		4.97		1.07
263	402	405	163	100	110	5.63	0.72		9.09		1.48
264	405	404	52	80	110	1.02	0.20	LO	1.15		0.06
265	405	407	398	100	110	3.94	0.50		4.69		1.87
266	404	406	380	100	110	3.97	0.51		4.76		1.81
267	407	406	57	80	110	0.16	0.03	LO	0.04		0.00
268	406	408	274	80	110	2.85	0.57		7.66		2.10
269	407	409	325	80	110	2.60	0.52		6.47		2.10
270	408	409	105	80	110	0.13	0.03	LO	0.03		0.00
271	408	410	314	80	110	1.44	0.29	LO	2.17		0.68
272	409	411	246	80	110	1.62	0.32		2.68		0.66
273	411	410	98	80	110	0.39	0.08	LO	0.20		2E-02

Booz Allen Hamilton, 2003

Part 2: Table 27: Pressure data

ZONE 1

NODE	RESERVOIR	FLOW (Q) l/s	ELEVATION	PIEZIOMETRIC PRESSURE	FREE PRESSURE
1	R	176.00	70	70	0
2		-1.64	10	67.78	57.78
3		-7.27	3	66.33	63.33
4		-5.04	3	63.35	60.35
5		-10.84	15	61.97	46.97
6		-12.73	21	61.71	40.71
7		-9.32	25	60.83	35.83
8		-7.51	17	60.86	43.86
9		-10.22	3	60.98	57.98
10		-7.96	17.5	60.63	43.13
11		-9.00	17	60.62	43.62
12		-6.37	9	59.52	50.52
13		-5.00	20	59.63	39.63
15		-3.96	23.6	48.88	25.28
18		-5.00	10	53.47	43.47
19		-8.41	5	53.43	48.43
20		-12.73	14	50.70	36.70
21		-14.54	10	48.08	38.08
26		0.00	59	62.63	3.63
27		0.00	59	72.62	13.62
101		-2.39	11	68.33	57.33
102		-2.39	25	67.84	42.84
103		-4.28	5	67.20	62.20
104		-2.39	13	65.64	52.64
105		-2.00	30	65.65	35.65
106		-3.44	22	64.94	42.94
107		-2.97	30	63.32	33.32
108		-3.89	23	62.54	39.54
109		-4.72	16	60.12	44.12
110		-1.76	30	60.19	30.19
111		-6.79	27	58.03	31.03
112		-1.44	35	57.63	22.63

ZONE 2

NODE	RESERVOIR	FLOW (Q) l/s	ELEVATION	PIEZIOMETRIC PRESSURE	FREE PRESSURE
2	R	184.91	10	120	110
42		-1.46	43	114.12	71.12
43		-1.46	63	113.38	50.38
44		-1.46	36	107.71	71.71
45		-6.34	57	107.71	50.71
46		-2.99	30	102.68	72.68
47		-4.72	59	102.60	43.60
48		-9.05	58	99.86	41.86
49		-5.40	50	100.03	50.03
50		-1.80	33	99.53	66.53
51		-2.07	68	98.31	30.31
52		-2.57	52	97.57	45.57
53		-1.24	45	97.07	52.07
54		-1.75	36	97.00	61.00
55		-2.27	41	93.60	52.60
56		-3.62	61	94.69	33.69
59		-5.71	43	87.07	44.07
60		-4.27	50	91.29	41.29
63		-4.77	65	87.64	22.64
64		-1.58	43	86.91	43.91
65		-0.63	37	86.92	49.92
66		-0.94	66	86.81	20.81
67		-0.79	35	86.81	51.81
11		-8.05	17	72.21	55.21
14		-19.10	23	73.06	50.06
15		-4.00	23.6	71.40	47.80
16		-6.82	25	70.76	45.76
17		-14.09	25	70.39	45.39
22		-5.60	22.2	81.39	59.19
23		-15.35	14	78.92	64.92
24		-17.10	15	77.13	62.13
69		-0.63	44	99.53	55.53
120		-3.19	72	117.73	45.73
121		-1.42	75	117.65	42.65
122		-4.28	64	117.50	53.50
123		-5.24	60	117.14	57.14
124		-3.20	60	117.14	57.14
125		-3.06	53	116.33	63.33
126		-1.58	73	116.33	43.33
127		-1.35	58	115.23	57.23
128		-0.99	43	115.20	72.20
129		-1.40	67	114.93	47.93
130		-0.54	75	114.90	39.90
131		-1.04	43	114.97	71.97

ZONE 3

NODE	RESERVOIR	FLOW (Q) l/s	ELEVATION	PIEZIOMETRIC PRESSURE	FREE PRESSURE
3	R	52.61	155	155	0
201		-1.73	85	152.36	67.36
220		-0.40	80	151.67	71.67
221		-0.83	100	151.15	51.15
222		-0.95	102	149.15	47.15
223		-0.77	82	149.32	67.32
224		-1.46	95	146.65	51.65
225		-1.62	105	146.74	41.74
226		-2.23	82	142.60	60.60
227		-2.12	107	142.60	35.60
228		-2.50	87	140.67	53.67
229		-2.23	98	140.74	42.74
230		-3.91	92	138.81	46.81
231		-2.50	85	138.90	53.90
232		-1.22	75	137.82	62.82
233		-2.02	103	133.64	30.64
234		-3.01	98	133.61	35.61
235		-1.22	120	130.49	10.49
236		-1.78	103	130.49	27.49
237		-0.77	115	129.97	14.97
238		-1.22	82	129.96	47.96
202		-0.50	115	152.02	37.02
203		-1.33	115	150.97	35.97
204		-2.45	90	151.03	61.03
205		-1.01	115	150.29	35.29
206		-1.78	90	150.13	60.13
207		-1.67	95	147.81	52.81
208		-1.17	110	147.81	37.81
209		-2.23	70	145.33	75.33
210		-2.12	95	145.33	50.33
211		-1.33	105	143.49	38.49
212		-2.50	83	143.44	60.44

ZONE 4

NODE	RESERVOIR	FLOW (Q) l/s	ELEVATION	PIEZIOMETRIC PRESSURE	FREE PRESSURE
4	R	46.89	190	190	0
301		0	117	188.77	71.77
321		-0.77	127	188.13	61.13
322		-0.45	110	187.81	77.81
323		-0.67	105	187.28	82.28
324		-1.39	132	187.28	55.28
325		-1.12	127	183.83	56.83
326		-1.78	145	183.83	38.83
327		-0.67	115	180.57	65.57
328		-2.02	135	180.57	45.57
329		-2.68	122	177.42	55.42
330		-2.12	155	177.40	22.40
331		-2.29	115	174.76	59.76
332		-2.45	147	174.78	27.78
333		-2.50	151	168.25	17.25
334		-1.46	115	167.27	52.27
335		-1.28	145	166.67	21.67
336		-5.85	137	162.04	25.04
337		-2.02	136	158.90	22.90
338		-2.02	150	158.90	8.90
302		-1.78	132	188.31	56.31
303		-1.67	147	184.49	37.49
304		-1.57	132	184.32	52.32
305		-1.22	125	183.16	58.16
306		-1.89	140	183.30	43.30
307		-2.29	125	181.83	56.83
308		-1.12	155	181.98	26.98
309		-1.22	155	181.63	26.63
310		-0.61	136	181.63	45.63

ZONE 5

NODE	RESERVOIR	FLOW (Q) l/s	ELEVATION	PIEZIOMETRIC PRESSURE	FREE PRESSURE
5	R	47.00	225	225	0
420		-0.45	160	219.30	59.30
421		-0.67	163	216.72	53.72
422		-0.67	182	216.26	34.26
423		-1.67	167	212.92	45.92
424		-0.95	185	212.90	27.90
425		-2.79	167	208.36	41.36
426		-2.45	172	205.62	33.62
427		-2.02	170	203.69	33.69
428		-2.02	187	203.63	16.63
429		-2.90	170	201.09	31.09
430		-1.12	165	199.72	34.72
431		-2.23	181	199.49	18.49
432		-2.23	180	197.35	17.35
433		-2.23	165	197.30	32.30
434		-1.01	187	196.15	9.15
435		-1.57	170	195.82	25.82
436		-1.78	184	194.01	10.01
437		-1.94	172	193.99	21.99
438		-2.79	193	190.98	-2.02
439		-2.50	165	190.98	25.98
401		0.00	220	224.82	4.82
402		-0.16	195	224.04	29.04
403		-1.17	175	223.57	48.57
404		-1.12	177	222.50	45.50
405		-0.67	197	222.56	25.56
406		-1.28	167	220.69	53.69
407		-1.17	185	220.69	35.69
408		-1.28	160	218.59	58.59
409		-1.12	187	218.58	31.58
410		-1.84	160	217.91	57.91
411		-1.22	173	217.92	44.92

Booz Allen Hamilton, 2003

APPENDIX F – WASTEWATER TREATMENT SCHEMATIC

Figure 9

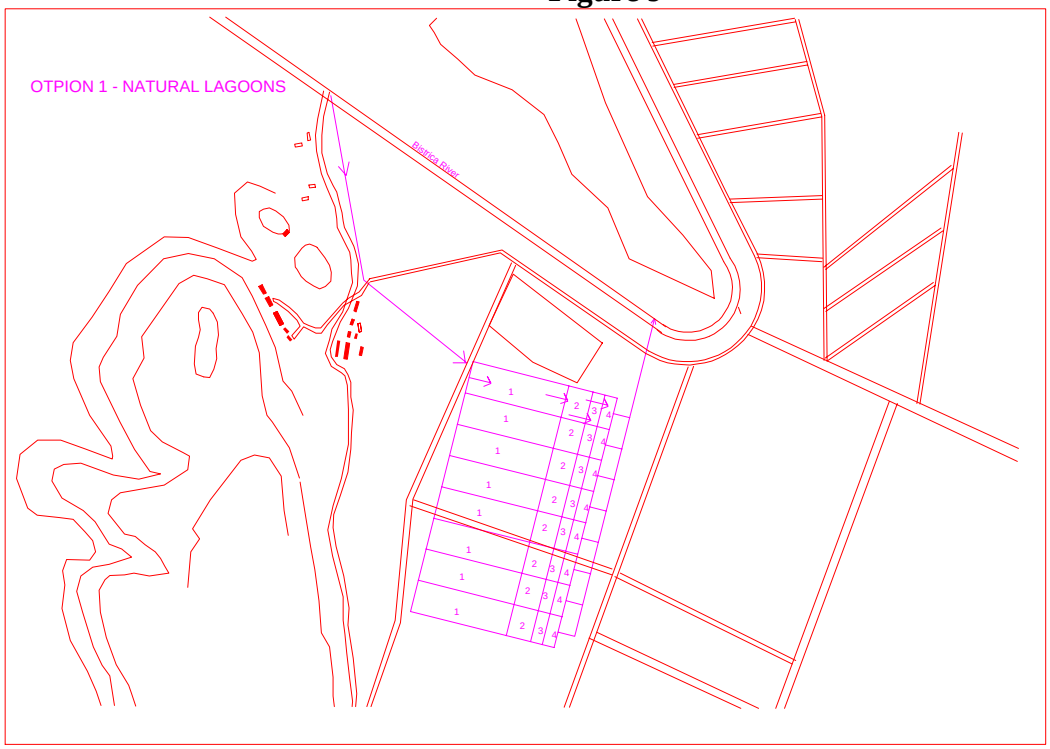

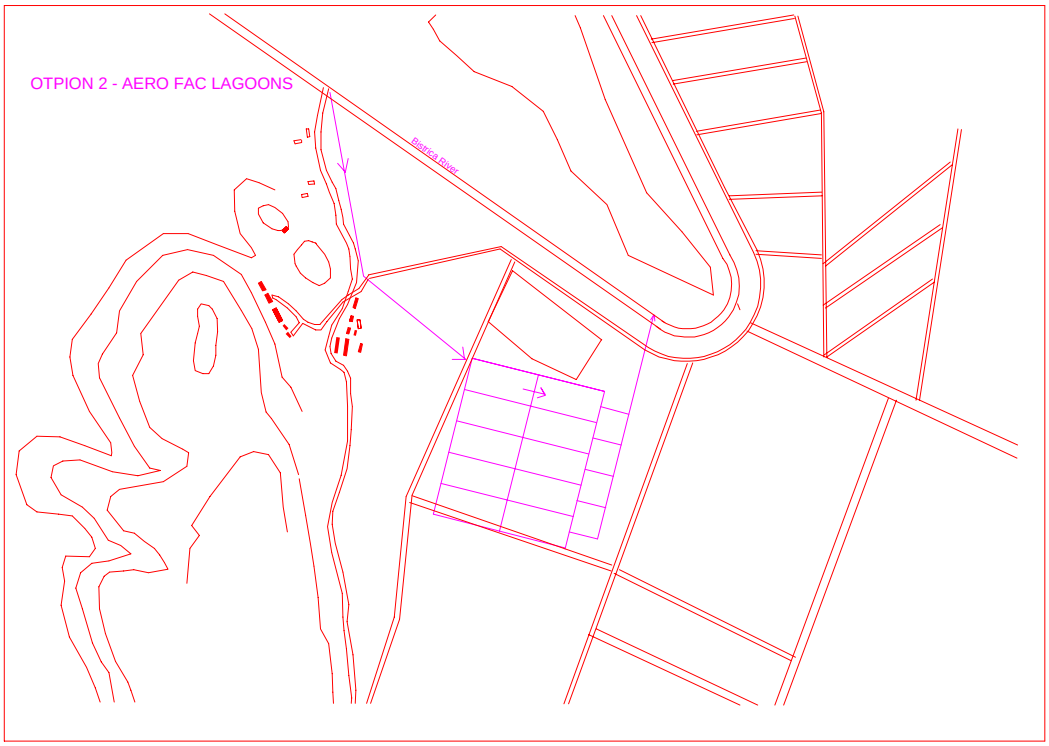

Booz Allen Hamilton, 2003