PN-ABA-105

BN 56762

WASH

WATER AND SANITATION FOR HEALTH PROJECT

Operated by
CDM and Associates

Sponsored by the U.S. Agency for International Development

1611 N. Kent Street, Room 1002
Arlington, VA 22209-2111 USA

Telephone: (703) 243-8200
Telex No. WUI 64552
Cable Address WASHAID

The WASH Project is managed by Camp, Dresser & McKee International Inc. Principal cooperating institutions and subcontractors are: Associates in Rural Development, Inc.; International Science and Technology Institutes, Inc.; Research Triangle Institute; Training Resources Group; University of North Carolina at Chapel Hill.

A WORKSHOP DESIGN FOR WELL IMPROVEMENT: PROTECTING OPEN WELLS

WASH TECHNICAL REPORT NO. 34

MAY 1988

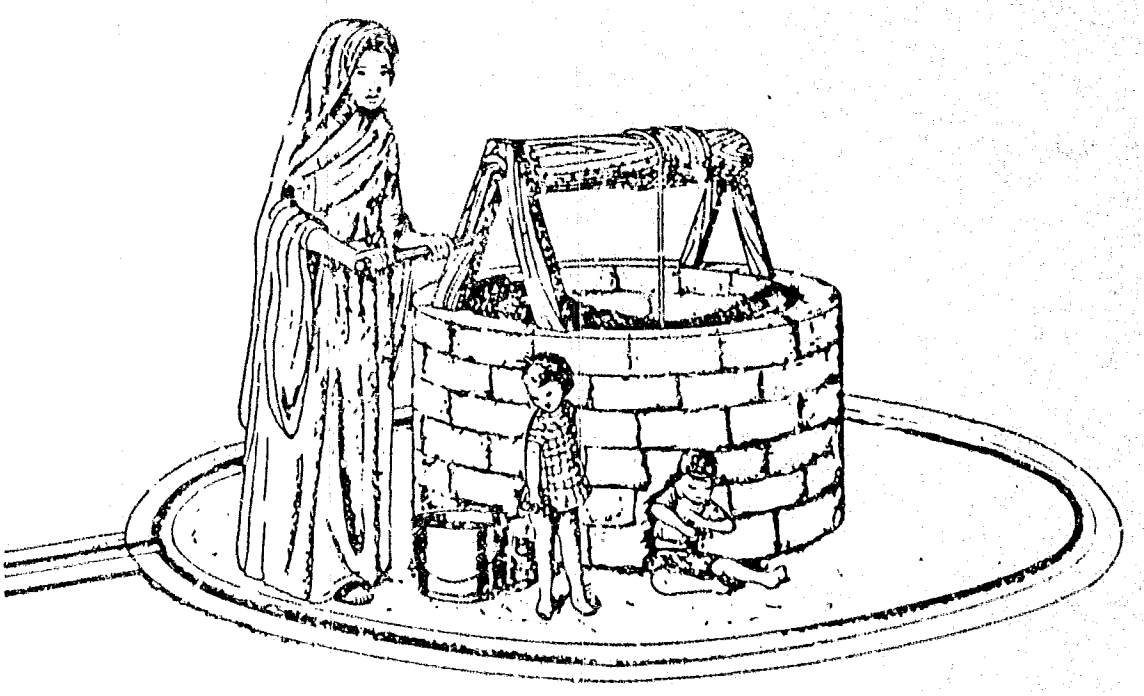

Prepared for
the Office of Health,
Bureau for Science and Technology,
U.S. Agency for International Development
WASH Activity No. 116

WASH TECHNICAL REPORT NO. 34

A WORKSHOP DESIGN FOR WELL IMPROVEMENT:

PROTECTING OPEN WELLS

Prepared for the Office of Health,
Bureau for Science and Technology
U.S. Agency for International Development
under WASH Activity No. 116

by

Maria Nagorski
and
Charles Pineo

Revised by

Scott Loomis
and
Oscar Larrea

May 1988

Water and Sanitation for Health Project
Contract No. 594?-C-00-4085-00, Project No. 936-5942
is sponsored by the Office of Health, Bureau for Science and Technology
U.S. Agency for International Development
Washington, DC 20523

TABLE OF CONTENTS

		Page
	ACKNOWLEDGMENTS	v
	INTRODUCTION TO THE TRAINING GUIDE	1
	PREPARATION FOR THE WORKSHOP	9
	LIST OF MATERIALS AND EQUIPMENT	13
SESSION		
1	INTRODUCTION TO THE WORKSHOP	15
	Handout 1-1: Workshop Goals	21
	Handout 1-2: Workshop Schedule	23
2	INTRODUCTION TO WELL IMPROVEMENT	25
	Handout 2-1: Existing and Improved Wells	31
	Handout 2-2: Types of Well Improvements	33
	Handout 2-3: Self-Assessment Inventory	35
3	PROJECT CYCLE AND PLANNING	41
	Handout 3-1: The Project Cycle	47
4	COMMUNITY WELL ASSESSMENT	49
	Handout 4-1: Overall Assessment of Community Wells	57
	Handout 4-2: Technical Assessment of Well Conditions	59
	Handout 4-3: Methods for Determining Water Depth and Well Yields	63
	Handout 4-4: Guidelines for Selecting Wells to Improve	65
5	DECISION-MAKING AND COMMUNITY INVOLVEMENT	67
6	PREPARATION FOR FIELDWORK	73
	Handout 6-1: Protection of Open Wells	79
	Handout 6-2: List of Tools and Materials Needed	81
	Handout 6-3: Glossary of Terms Used in Construction	83

TABLE OF CONTENTS

SESSION		Page
7	EXCAVATING FOR THE FOUNDATION	85
	Handout 7-1: Determining the Diameter of the Foundation Circle	91
	Handout 7-2: Locating the Well Center and the Foundation Ledge; Excavating the Ledge	93
8	BUILDING A CONCRETE BLOCK FOUNDATION	97
	Handout 8-1: Placement of Concrete Block Foundation	103
9	MIXING AND POURING CONCRETE BLOCKS	107
	Handout 9-1: Concrete Primer	113
	Handout 9-2: Making Concrete and Mortar Mixes	117
	Handout 9-3: Building Concrete Block Forms and a Measuring Box	119
	Handout 9-4: Mixing and Pouring Concrete Blocks	125
10	APRON AND HEADWALL DESIGNS	127
	Handout 10-1: Water Lifting Devices	133
11	PREPARATION FOR APRON POUR	135
	Handout 11-1: Construction Steps--Preparation for Apron Pour	141
12	MIXING AND POURING THE APRON	147
	Handout 12-1: Construction Steps for Apron Pour	153
13	USER EDUCATION	159
	Handout 13-1: User Education Topics	165
14	COST ESTIMATING AND PLANNING	167
	TRAINER NOTES: ESTIMATING FOR CONSTRUCTION	173
	Handout 14-1: Resources Checklist	179

TABLE OF CONTENTS

SESSION		Page
15	HEADWALL CONSTRUCTION AND DRAINAGE DITCH	183
	Handout 15-1: Steps in Headwall Construction	189
	Handout 15-2: Drainage Ditch Construction	193
16	PROJECT COMPLETION	197
	Handout 16-1: Well Clean-Up and Disinfection Steps	205
	Handout 16-2: Water for the World: Disinfecting Wells	207
17	EVALUATING THE WELL IMPROVEMENT PROJECT	213
	Handout 17-1: Project Evaluation Checklist	219
18	FIELDWORK REVIEW	221
	Handout 18-1: Project Learning Worksheet	227
19	BACK-HOME PLANNING	229
	Handout 19-1: My Work Plans	235
20	WORKSHOP EVALUATION AND CLOSURE	237
	Handout 20-1: Well Improvement Workshop Evaluation Form	241

ACKNOWLEDGMENTS

Many people contributed to the development of this training guide. Maria Nagorski and Chuck Pineo wrote the first draft. Scott Loomis and Oscar Larrea pilot tested the training guide in Honduras. Special thanks go to the Peace Corps, which collaborated with WASH to plot test the training guide in Honduras. In particular, Jaime Henriquez, of the Office of Training and Program Support in Peace Corps/Washington, and Guy Branch, Associate Peace Corps Director in Honduras, were instrumental in arranging and carrying out the pilot.

Based on the pilot test, Oscar Larrea and Scott Loomis made substantial revisions. Fred Rosensweig, in addition to overall management of the activity, reviewed the final draft and made the final revisions. Ellis Turner provided technical oversight of the document and made many useful suggestions.

For editing the training guide, several people deserve thanks. Diane Bendahmane did a first-rate job in editing the first draft. Ken Litt did all the graphics for the training guide, including the drawing on the cover. Finally, Betsy Andrews had overall responsibility for coordinating the editing and production.

INTRODUCTION TO THE TRAINING GUIDE

Needs Addressed by the Training

The purpose of the training workshop outlined in this guide is to provide participants with the skills and knowledge needed for assisting rural communities to organize and implement well improvement projects. The overall focus is on making shallow open wells more sanitary by making above ground improvements through constructing a headwall and an apron. The workshop does not deal with increasing the yield of the well or with installing a handpump. This guide is intended to be used by the trainer(s) who will conduct the workshop. It is not a guide for the participants, although it contains materials which will be handed out to them.

The workshop is intended for participants who work in rural areas with local communities who want to improve the sanitary conditions of their water supply. It is designed for individuals lacking the technical skills or knowledge needed to plan and construct well improvement projects, or for those who desire to practice, review, and refine their present level of knowledge and skill. At the end of the workshop participants should be able to implement successful village-based well improvement projects.

This training workshop is appropriate for project promoters, health workers, rural development specialists, and others involved in the promotion of improved water supply. They may be ministry staff members, extension workers, Peace Corps volunteers, or any individuals responsible for and interested in working to improve the quality of the community water supply.

Overall Workshop Goals

During the workshop a balance is struck between the technical skills needed to improve a well site and the community development skills needed to mobilize communities to assume responsibility for their water improvement project. In the workshop, participants will be involved in the planning and implementing of a well improvement project in the local community. They will participate in all phases of this project. At the same time, they will be learning effective methods of involving communities in planning and implementing well improvement projects.

At the end of the workshop, participants will be able to:

1. Explain the benefits of improving wells.

2. Work with village leaders and groups to initiate, implement, and follow through with a sanitary improvement project for dug wells.

3. Assist villages to assess the need for improving well conditions and identify the major categories of improvements.

4. Fabricate and make use of concrete blocks.

5. Mix and pour concrete with appropriate reinforcement.

6. Design and construct a headwall.

7. Design and construct a sloped apron with adequate backfill and an appropriate structure for draining water.

8. Develop user education strategies demonstrating clean water storage and handling techniques and well maintenance and usage.

9. Estimate and plan the type, quantity, and basic costs of material and labor needed for a proposed project.

10. Describe the importance of a continuing well maintenance program.

11. Recognize construction problems in existing wells and determine if a structure should be repaired or replaced.

Trainers

This training guide has been designed to be used by trainers who have expertise in open wells and skills in training adults. For a group of 11 or more participants, a team of two trainers will be needed.

At least one of the two must have experience in constructing and improving wells, and at least one must have prior training experience, having participated in training-of-trainers workshops and conducted previous workshops using adult learning techniques. This trainer must be skilled in facilitating groups, have experience in development work at the village level, and feel comfortable with technical material.

One trainer can handle a participant group of ten or fewer. This trainer, however, would need both the training and technical skills described above. All trainers who use this guide must be oriented toward practical hands-on training and familiar with well improvement, since much of the training will involve actual work with wells.

Approach to Training

The program for the workshop is based on the belief that the knowledge and skills required by those planning and implementing well improvement projects involve both:

- technical areas, including site selection, building a foundation apron, headwall construction, maintenance, and repair and

- community development skills, including facilitating village mobilization and decision-making, problem-solving, user education, planning, and strategy development.

The program is organized around the sequence of activities required to complete a well improvement project. The activities and their sequence are called the "project cycle" (see Session 3).

The program is based on the belief that people can learn best how to implement improvement projects from both classroom theory and discussion and "hands-on" application of this theory in an actual work setting. Trainees spend time in workshop sessions learning how to improve a well and at the project site where they actually perform the construction work. In this way, the community and its improvement project become an integral part of the training.

Since this course requires participants actually to work on a project (with a good deal of access to the trainers throughout the course), the number of participants should be small. The maximum number of participants suggested is 24. More than 24 participants can limit the effectiveness of the workshop.

The training staff should include one or two trainers (depending on the size of the group), a workshop coordinator, a project or site supervisor, and a labor force of an appropriate size. The trainers conduct the training sessions; the workshop or site coordinator arranges for the procurement of materials and labor, for the transportation and housing of participants, and for other logistical support; the project supervisor (often a mason) oversees the construction and supervises the village labor force; and the village work force prepares the site and supplements the labor of the workshop participants.

Organization of the Training Guide

This course is divided into 20 training sessions. Each session covers a specific topic. A training session may be as short as two hours or as long as eight hours. A session generally requires a half or full day, depending on the nature of the topic. The lengths given for each session and in the workshop schedule do not include breaks or lunch.

Trainer Guidelines

A synopsis of each session's steps, procedures, time, handouts/materials, and suggested flipcharts is contained in chart form at the beginning of each session. Trainer guidelines are written for each training session. These are intended to provide the training staff with detailed instructions on how to deliver the session. Specifically these guidelines include:

- session objectives,
- an overview of the session--what is contained in the session and why it is important,

- detailed instructions for conducting the training activities included in the session (i.e., lecturettes for theory, group discussions, role plays, field activities, etc.),
- a schedule showing how long each part of the session should take,
- a list of materials needed for conducting the session, and
- reference and background handouts for distribution to participants.

While the guidelines provide step-by-step instructions for the training staff, it is assumed, however, that the training staff has the technical expertise as well as the training skills necessary for conducting participatory, interactive workshops. Note that all training sessions begin with an overview of the objectives and activities of the session, and all close with a look back at the objectives to see if they have been achieved and a look ahead to the next session.

Materials for Participants

The materials to be distributed to participants are located at the end of the guidelines for each session; they have also been regrouped at the end of the guide in the section entitled Participant Reference Packet (Handouts). Thus, trainers can remove all the handouts for duplicating purposes without disturbing the individual guidelines.

Participants should be provided with a notebook in which to keep their materials. The notebook should have at least five dividers, one labeled for each phase of the project cycle. The participants can put the appropriate materials, along with their own notes, in the proper section of the notebook, and it will then serve as their "handbook" for well improvement projects.

The trainer can choose to distribute the materials in one of two ways. One method is to distribute the handouts at the time they are covered in the training session. Alternatively the training staff can assemble all the handouts and put them into the participants' notebooks prior to the workshop. Thus, on the first day, the notebooks already containing handouts for the entire course are distributed to the participants. Both methods work effectively, and the training staff should choose the preferred method.

Workshop Content and Methodology

Assumptions and Beliefs

This training program and the methodologies it uses are based on the following assumptions and beliefs:

- A successful well improvement project is one that is village-based, managed effectively over time by the village itself with minimum dependence on outside expertise, and results in the use of safer water by the majority of the village population.

- Successful projects require technical skill, skill in community work, and skill in project management.

- Necessary knowledge and skills can best be acquired through a balance of technical theory and practical "hands-on" application.

- Adults learn best when they are actively involved in the learning process--doing things, discussing, analyzing, experimenting--rather than passively listening to lectures or observing trainer-centered activities.

- Workshop participants learn from each other as well as from the trainers and therefore the learning process should include small groups of participants working together.

Well Improvement Construction Project

The construction project has two purposes: 1) to provide a laboratory for learning which simulates the situations that participants will actually face in implementing well improvement projects and 2) to improve a village well and leave a more sanitary water source for the community.

In order to accomplish the above purposes, the project and the workshop are interdependent:

- Participants actually work on the project.

- Project activities are planned so that they fit into the course schedule.

- Most workshop topics are scheduled to fit into the natural sequence of project completion (with the exception of some construction sessions which occur out of sequence to allow time for the concrete to cure). Many sessions begin in the classroom, move to the field, and are completed back in the classroom.

- The training staff is responsible for conducting the training program and for ensuring the completion of the project.

- A labor force is available to supplement the participants' labor.

Common Workshop Methods

Since this course is designed on the principles of adult learning and experiential learning methodologies, some of the common training techniques are:

lecturettes (short trainer presentations)

demonstrations

large group discussions

small group tasks

Construction Teams

The participants will be divided into two construction teams. Each team will improve one well by constructing a headwall, a sloped apron, and a drainage ditch and by installing a water-lifting device. It is recommended that the teams be formed with a good balance of construction skills and experience. To ensure that the wells are completed, work crews and local site supervisors need to be arranged before the workshop. Local laborers need to complete tasks which teams do not have time to complete or tasks which no longer provide a learning opportunity for the participants. Tasks for unskilled laborers also include transporting construction materials before and during the workshop.

Planning for the Training Workshop

Conducting an 11-day training workshop, implementing an actual well improvement project, and coordinating them effectively for maximum learning is no small task. Obviously, the planning and preparation for this event will have to be given a good deal of attention. Planning and preparation can be divided into eight categories:

- Selecting the appropriate village in which to have the training program.
- Working with the village to obtain participation and assistance.
- Adapting session sequences to participant job roles and functions.
- Selecting two well sites for the training project.

- Adapting the content of the technical sessions to the local wells.
- Preparing for the construction activities.
- Selecting and preparing the workshop facilities.
- Preparing the staff to deliver the training program.

Selecting the Village

The village in which the training program is conducted must be chosen carefully. The following are some points to consider in making this choice:

- The availability of four to six wells, at least two of which need significant improvements.
- Village interest.
- Ease of access to the village.
- Availability of workshop facilities close to wells.
- Living accommodations for participants.
- Labor force available to work on construction project.

Preparing the Staff to Conduct Training Program

For a training program of this complexity to be conducted effectively and run smoothly, the training staff must work together as a team. A vital part of teamwork is having time together before the workshop to plan and coordinate how the training activities will be carried out. These planning activities should take several days and should involve

- a concerted effort to build a good working team,
- a discussion of how the training program will be conducted so that all training staff understand,
- decisions about what each trainer will do,
- preparation for conducting workshop sessions,
- advance preparation for participant fieldwork (at the site and in the community), and
- planning the timing for classroom exercises and fieldwork.

PREPARATION FOR THE WORKSHOP

This workshop requires careful planning and many arrangements which must be made prior to the start of the training. The following table lists the key preparatory steps and the way they should be sequenced.

Activity	Time Completed Before Workshop
Recruit and select participants.	2 months
Identify/hire training staff (trainers, workshop coordinators, and site supervisor).	2 months
Identify learning needs, roles, and experience of the participants.	2 months
Select an appropriate village or community for the fieldwork.	2 months
Locate an adjacent training site.	2 months
Determine the basic workshop design and well improvements to be constructed.	1 month
Identify the quantity and type of construction materials needed.	1 month
Work with the village to obtain its cooperation and appropriate participation.	1 month
Survey water and sanitation conditions and choose the construction sites.	1 month
Arrange for participant and staff lodging and meals.	1-2 months
Arrange all necessary transportation.	1 month
Obtain all needed construction materials and tools.	1 month
Arrange for storage of supplies.	1 month
Decide how many laborers are needed and arrange to hire them.	1 month
Arrange for building or procuring the requisite number (240) of concrete blocks.	1 month
Prepare workshop materials and handouts.	1 month

Contact and work with village leader and groups affected by the construction project.	1 month
Schedule sequence of construction work with labor crew.	2 weeks
Fabricate concrete blocks and prepare the construction site.	1 week
Complete final preparations and train the staff at the training site.	1 week

Begin training

Preparation for Construction - Selecting the Wells

Two wells need to be selected for construction purposes. They must meet the following specifications:

- measure 1.5 meters in diameter,
- be located in stable soil,
- have walls which are not in danger of caving in,
- be open and shallow with no improvements,
- be in use in a village or community all year long, and
- not have a history of drying up.

Preparation for Construction

Trainers need to review each of the construction sessions to determine if all the information is correct and appropriate for the well improvement project selected for this workshop. In particular, attention needs to be paid to the team instructions, construction sketches, calculations, measurements, and materials needed. Modifications in these will probably need to be made to reflect local conditions, available materials, and resources. A list of materials and equipment required to improve two wells is included at the end of this section.

In advance, the trainers need to:

- get permission to work on the selected well from appropriate authorities and well users,
- obtain all needed materials, equipment, and tools,
- arrange for an appropriate work force, and
- make arrangements for a safe and convenient storage space for materials, supplies, and tools.

Specific preparatory construction work to be completed before the workshop includes:

- Rough grading of the ground surface around the open well. All bushes, grass, stones, and debris need to be cleared away from the well area. Holes need to be filled in and high spots evened out to leave a relatively smooth, even surface at least three meters around the well.

- All lumber needs to be pre-cut to the appropriate dimensions (see materials list).

- Concrete block forms need to be constructed in sufficient quantity to make approximately 240 concrete blocks prior to the workshop.

- Three hundred and fifty concrete blocks must be fabricated for use in the workshop.

LIST OF MATERIALS AND EQUIPMENT
(to improve two 1.5 meter diameter wells)

Materials	Unit	Quantity
Cement	sack	28
Sand	cubic meter	12
Gravel	cubic meter	21
Rebar 10 mm	bars of 6 m each	7
Rebar 3 mm	bars of 6 m each	7
Tie wire	meter	16
Nails 5 cm	kg	1
Nails 2.5 cm	kg	1
HTH Hypochloride (approx. 70% chlorine)	kg	1
Concrete blocks 15 cm x 20 cm x 40 cm	each	240
Lumber		
For two concrete block forms:		
2 cm x 29 cm x 54 cm	each	2
2 cm x 5 cm x 34 cm	each	8
2 cm x 5 cm x 44 cm	each	4
2 cm x 5 cm x 54 cm	each	4
2 cm x 15 cm x 44 cm	each	4
2 cm x 15 cm x 20 cm	each	4
2 cm x 5 cm x 5 cm	each	8
For two measuring boxes (one cubic foot each):		
2 cm x 30 cm x 30 cm	each	4
2 cm x 34 cm x 30 cm	each	4
2 cm x 34 cm x 34 cm	each	2
2 cm x 10 cm x 84 cm	each	4
For screeds:		
5 cm x 5 cm x 60 cm (leveling stakes)	each	16
2.5 cm x 5 cm x 30 cm (boards)	each	2
2.5 cm x 10 cm x 270 cm (boards)	each	4
2.5 cm x 5 cm x 50 cm (measuring sticks)	each	8
2.5 cm x 5 cm x 13 cm (measuring sticks)	each	4
5 cm x 5 cm x 75 cm (stakes)	each	16
2.5 cm x 5 cm x 150 cm (support pieces)	each	24
5 cm x 10 cm x 150 cm (screeds)	each	12
5 cm x 10 cm x 200 cm (sticks)	each	4
2.5 cm x 7.5 cm x 14 cm (pieces)	each	8
2.5 cm x 15 cm x 30 cm (pieces	each	8
2.5 cm x 5 cm x 15 cm (pieces)	each	8
5 cm x 10 cm x 250 cm (straight edge)	each	2
2.5 cm x 5 cm x 100 cm (stakes)	each	10

Materials	Unit	Quantity
For two water lifting devices		
According to method selected		
Equipment		
Plumb bobs with string	each	2
Trowels	each	6
Wheelbarrows	each	4
Buckets	each	6
Rope	40-m	1
Measuring tape (5 meters)	each	4
Axes	each	4
Carpenter levels (1 meter long)	each	4
Hammers	each	4
Crowbars	each	2
Barcutters (for rebar)	each	2
Tie wire cutters	each	4
Pliers	each	4
Hacksaws	each	2
Flat blade shovels	each	8
Round blade shovels	each	6
Paint brushes (for used engine oil)	each	4
Rakes	each	4

Equipment necessary for two water-lifting devices (according to method selected)

GUIDE TO SESSION 1: INTRODUCTION TO THE WORKSHOP

Total Time: 2 hours, 15 minutes

SUBJECT	PROCEDURE	TIME	HANDOUTS/MATERIALS	FLIPCHART REQUIRED
Welcome and Introduction	Trainer presentation	15 minutes		
Overview	Trainer presentation	5 minutes		
Getting Acquainted	Pair interviews	30 minutes		Task instructions
Workshop Expectations	Small groups	40 minutes		Group's expectations
Workshop Goals	Group exercise	20 minutes	Handout 1-1: Workshop Goals	Workshop goals
Schedule and Methodology	Trainer presentation	15 minutes	Handout 1-2: Workshop Schedule	Workshop schedule
Workshop Procedures	Trainer presentation	5 minutes		
Closure	Trainer presentation	5 minutes		

SESSION 1: Introduction to the Workshop

Total Time: 2 hours 15 minutes

OBJECTIVES

By the end of this session, the participants will

- be acquainted with one another and with the training staff and
- be able to describe the workshop goals and schedule.

OVERVIEW

This introductory session is designed to help participants get to know each other and to describe the workshop so that they understand what it will offer them. In this session participants identify their own learning goals and expectations and compare them to the goals and schedule of the workshop. Throughout the session, participants have opportunities to work with each other and begin to form a learning community.

PROCEDURES

1. Welcome and Introductions **Time:** 15 minutes

   Introduce yourself and welcome the participants. Explain who is sponsoring this workshop and introduce representatives of the sponsoring agency, if any are present.

2. Overview of Objectives and Activities **Time:** 5 minutes

   Share session objectives and provide an overview of this session.

3. Getting Acquainted - Pair Interviews **Time:** 30 minutes

   Explain that the next activity is designed to help the participants get to know one another. Write the following instructions for the activity on a flipchart.

   - For the next ten minutes, choose a partner and talk with him/her and find out his/her name, place of employment, and job.
   - Be prepared to offer the same information about yourself.

   After ten minutes, tell the participants to choose another partner and discuss this topic. What I would like to be doing in my work that is different from what I am doing now.

After approximately ten minutes tell the participants to choose still another partner and discuss this new topic: My most rewarding experience working with a village community.

4. Workshop Expectations - Small Groups **Time:** 40 minutes

Give the participants five minutes to respond individually to the following question: What do you hope to learn or do during this workshop?

Then ask them to divide into four groups. Give the groups the following task to perform in 30 minutes.

- Discuss what each member of your group hopes to learn or do during this workshop, i.e., your expectations for the workshop.
- Choose the two or three most important expectations of the group.
- Choose one person to write your group's expectations on flipchart paper.

5. Workshop Goals and Participant Expectations - Group Exercise **Time:** 20 minutes

Each participant will have his or her own expectations of what the workshop will be like and what will be learned from it. The lists of participants' expectations give the training staff an opportunity to learn what the participants want. This exercise will then clarify which expectations can and cannot be satisfied by this particular workshop.

A. Post the lists of expectations in the front of the room. Ask groups to clarify as needed.

B. Tell the participants that they will look at the workshop goals and see how close they come to matching what they said they wanted to learn.

C. Post and share workshop goals. Pass out Handout 1-1: Workshop Goals. Explain that the primary purpose of this workshop is to develop the skills and knowledge needed to assist rural communities to improve the sanitary conditions of the open dug wells in use in their areas. Be sure that the participants understand that it is beyond the scope of this workshop to teach the skills needed to increase the yield of these wells or to protect them more fully by installing handpumps.

Explain that the workshop will focus on incremental improvements which will make the wells more sanitary and thus reduce the incidence of disease caused by contaminated water. The focus is on above-ground (surface) improvements to the wells to protect the well water.

D. Compare the workshop goals with the expectations of the participants. Look at each item on the participants' lists and match it to the workshop goals. This will help to further clarify the goals.

E. Note any expectations on the participants' lists that are not covered in the workshop goals and make it clear that these will not be covered. Most of the participants will understand and be cooperative if they know what to expect. If several participants need to learn about something not covered in this workshop, perhaps an informal discussion group can be arranged or some other way to address the topic can be found.

6. Schedule and Methodology **Time:** 15 minutes

Pass out Handout 1-2: Workshop Schedule. It is important also to have the schedule written on flipchart paper and posted on the wall for use throughout the course.

Go over the schedule and explain how the training activities are arranged to meet the workshop goals.

Explain the kinds of activities that will take place each day. Make sure it is clear that the participants are at a workshop -- not a traditional course. They are going to learn by doing. The methodologies used will be field experience, group and individual problem solving, discussions, demonstrations, and hands-on activities.

7. Workshop Procedures and Norms **Time:** 5 minutes

Since the group will be working together for two weeks, it is important to discuss carefully how everyone will work together and what trainers and participants expect of each other. Have a list prepared of the expectations that the training staff has of the group. These should include:

- Everyone is expected to be responsible for his/her own learning.
- Everyone is expected to participate fully in all sessions.
- All sessions will start on time.
- Clothes should be comfortable and appropriate especially for fieldwork.
- Everyone is expected to participate in the physical work in the hands-on sessions.

Add to the list any other norms that the training staff feels are appropriate. Also, ask if the group has any norms they would like to add.

8. Closure: Review this Session and Link to the Next **Time:** 5 minutes

MATERIALS

Handout 1-1: Workshop Goals
Handout 1-2: Workshop Schedule

WORKSHOP GOALS

At the end of the workshop, participants will be able to:

1. Explain the benefits of improving wells.
2. Work with village leaders and groups to initiate, implement, and follow through with a sanitary improvement project for dug wells.
3. Assist villages to assess the need for improving well conditions and identify the major categories of improvements.
4. Fabricate and make use of concrete blocks.
5. Mix and pour concrete with appropriate reinforcement.
6. Design and construct a headwall.
7. Design and construct a sloped apron with adequate backfill and an appropriate structure for draining water.
8. Develop user education strategies demonstrating clean water storage and handling techniques and well maintenance and usage.
9. Estimate and plan the type, quantity, and basic costs of material and labor needed for a proposed project.
10. Describe the importance of a continuing well maintenance program.
11. Recognize construction problems in existing wells and determine if a structure should be repaired or replaced.

WORKSHOP SCHEDULE

DAY 1	DAY 2	DAY 3	DAY 4	DAY 5	DAY 6	DAY 7
1. Workshop Introduction 2. Introduction to Well Improvement	4. Community Well Assessment	Continuation of 5 6. Preparing for Fieldwork	8. Build Foundation	10. Apron and Headwall Design 11. Preparation for Apron Pour	12. Mix and Pour Apron	
LUNCH						
3. Project Cycle and Planning	5. Decision-Making and Community Involvement Community Meeting	7. Excavate for Foundation	9. Mix and Pour Concrete Blocks			

DAY 8	DAY 9	DAY 10	DAY 11	DAY 12	DAY 13	DAY 17
13. User Education	15. Headwall Construction and Drainage Ditch	16. Project Completion	Continuation of 16 17. Evaluating the Well Improvement Project	19. Back-Home Planning 20. Evaluation of the Workshop and Closure		
LUNCH						
14. Cost Estimating and Planning		Community Meeting	18. Fieldwork Review			

GUIDE TO SESSION 2: INTRODUCTION TO WELL IMPROVEMENT

Total Time: 1 hour 45 minutes

SUBJECT	PROCEDURE	TIME	HANDOUTS/MATERIALS	FLIPCHART REQUIRED
Session Overview	Trainer presentation	5 minutes		
Sanitary Improvements	Discussion	15 minutes		
Well-Improvement Project	Trainer presentation	15 minutes		
Types of Improvements	Lecturette	20 minutes	Handout 2-1: Improved and Existing Wells Handout 2-2: Types of Well Improvements	
Introduction to the Construction Project	Trainer presentation	10 minutes		Steps in construction process
Self-Assessment	Trainee inventory	30 minutes	Handout 2-3: Self-Assessment Inventory	
Closure	Trainer presentation	10 minutes		

SESSION 2: Introduction to Well Improvement

Total Time: 1 hour 45 minutes

OBJECTIVES

By the end of this session, the participants will be able to

- discuss the importance of improving shallow open wells,
- identify the types of improvements appropriate for open hand-dug wells, and
- assess their own skills and learning needs.

OVERVIEW

This session is designed to introduce the topic of improving shallow open wells. The participants discuss the importance of improving poorly protected wells and identify the types of improvements that will be covered in the workshop. The session concludes with a self-assessment of the skills needed to improve a well.

PROCEDURES

1. Session Overview **Time:** 5 minutes

   Share the session objectives and provide an overview of the session.

2. Sanitary Improvements - Discussion **Time:** 15 minutes

   Lead into an overview of the main focus of this workshop by having participants brainstorm a list of reasons for improving sanitary conditions around open dug wells.

   Discuss briefly the importance of improving the quality (cleanliness) of the water and the health hazards of poorly protected open wells.

   State that open wells will never be completely sanitary. In order to be more fully sanitary, wells need to be sealed and covered with a handpump. However, significant improvements in sanitary conditions can be achieved through more limited types of improvements, like the ones presented in this workshop.

3. Well-Improvement Projects **Time:** 15 minutes

   Define well improvement as any action(s) that will make a well more sanitary and/or increase the yield of the well. Although this workshop

concerns only improving the sanitary aspects, other types of improvements to increase yield will be discussed briefly.

Explain that the purpose of this activity is to identify the range of improvements which can be made to open wells and the potential benefits of such improvements.

Ask the participants how many have been involved in some type of well improvement activities in the past. Then, ask three or four participants who have been involved in improving open dug wells to describe these to the rest of the group. Get their answers to these questions:

- What type of improvements were made and why?
- What were the problems and successes of the projects?

4. Types of Improvements - Lecturette **Time:** 20 minutes

Building on the examples provided by the participants in Step 3, provide an overview of the common types of improvements which can be made to open dug wells. Point out that these can range from simple clean-up and disinfection tasks to complex construction such as building a circular headwall and apron. Distribute Handout 2-1: Improved and Existing Wells and refer to it during your lecturette. Use Handout 2-2: Types of Well Improvements as the basis for the lecturette. Distribute Handout 2-2 at the end of the lecturette.

5. Introduction to the Construction Project **Time:** 10 minutes

Ask for questions and clarify points as necessary from the lecturette.

Explain that in this workshop the participants will complete a construction project to make four major improvements on an existing well. Write the following steps in the construction project on a flipchart and explain them to the group:

- Excavate and place a concrete block foundation around the well to support the apron and headwall.
- Construct a concrete apron which will be set on the foundation.
- Build a headwall of concrete blocks.
- Dig a suitable drainage ditch.

6. Self-Assessment **Time:** 30 minutes

Distribute Handout 2-3: Self-Assessment Inventory and explain that it is based on a comprehensive inventory of all major tasks required for the well improvement project. Tell the participants that this inventory was used to develop the goals and schedule for the training workshop. The instrument is intended to help participants find out how skilled they are in the various tasks and to identify skill areas which need improvement.

Participants will have a chance to fill out the form and discuss it with a partner. The discussion provides another opportunity to learn more about another workshop participant.

Ask the participants to take 15 minutes to fill out the inventory. When all the inventories have been completed, ask the participants to pair off and take another 15 minutes to discuss the following subjects:

- their strengths and weaknesses and
- areas in which they hope to improve during the workshop.

7. Closure: Review this Session and Link to the Next **Time:** 10 minutes

Ask for comments on what the participants learned from this last exercise. See if there are common themes or new learning needs anyone wants to share with other participants.

Discuss how the participants can rely on each other and on trainers to monitor their progress during the workshop. Make it clear that you are available for consultation and assistance at appropriate free times.

MATERIALS

Handout 2-1: Existing and Improved Wells
Handout 2-2: Types of Well Improvements
Handout 2-3: Self-Assessment Inventory

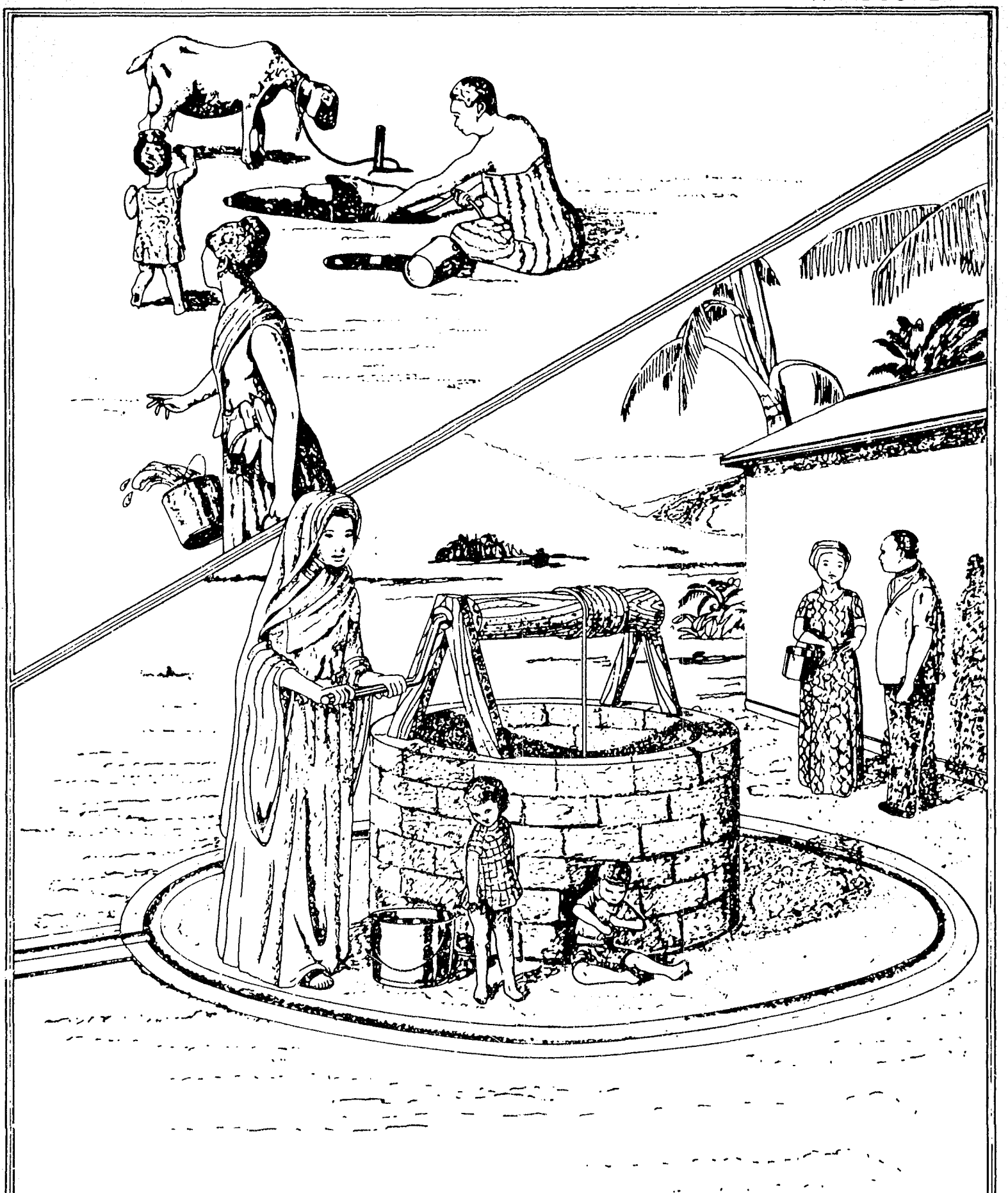

EXISTING AND IMPROVED WELLS

TYPES OF WELL IMPROVEMENTS

Deepening or Widening a Well - The purpose of deepening or widening a well is to increase the yield of the well by increasing the water supply. Both of these improvements are technically difficult and require extensive safety precautions as they include working inside of the well.

Construction of a Concrete Headwall - The purpose of a headwall is to prevent dirt and debris from falling into the well and to keep animals and people away from the well water. A headwall also makes it more convenient to draw water from the well.

Construction of a Drainage Channel - The purpose of a drainage channel is to divert spilled and contaminated water away from the well. It also prevents dirty water from seeping back into the well.

Construction of an Apron around the Well - The purpose of an apron is to help drain spilled water away from the well, keep the surface area around the well clean, and prevent contaminated surface water from entering the well. The apron is sloped to drain water away from a well.

Build, Move, or Improve Drainage or a Soakaway Pit - A drainage pit is preferable to a soakaway pit. A drainage pit siphons dirty water away from the well. If it is not feasible to construct a drainage pit, a soakaway pit can be used to soak up the spilled water. It is preferable to drain water to a field some distance from the well.

Upgrade, Replace, or Install Lining for a Well - The purpose of lining a well is to prevent groundwater from seeping into it. Replacing or installing lining requires working inside the well and therefore appropriate safety precautions must be taken. It is usually unnecessary to line a well if it is in rock or solid ground.

Sanitary Seal of the Apron to the Headwall - The sanitary seal prevents spilled water from draining back into the well through the ground.

Installation or Improvement of a Water Lifting Device - A water lifting device facilitates drawing water, protects the headwall and rope from damage, and provides a way to draw water that is more sanitary than the use of individual devices.

Handpump - The purpose of a handpump is to cover and seal the well completely so the water cannot be contaminated by any outside sources. When a handpump is installed properly, water can be withdrawn only by using the handpump.

Disinfection of a Well - The purpose of well disinfection is to purify and clean the well water periodically. It should be done as part of the on-going maintenance of the well and after any type of construction work or improvements are completed.

Develop a Maintenance and Upkeep Schedule - The apron, headwall, and area around the well should be kept clean. This requires removing debris, keeping the area around the well free of standing water, and preventing animals from going into the area around the well. Upkeep includes checking the inside of the well for leaks, caving in of walls, etc.

SELF-ASSESSMENT INVENTORY

Circle one number for each item. This inventory will help to provide you with a baseline of your skills in carrying out well improvement projects.

	DO WELL (4)	DO OKAY (3)	DIFFICULT TO DO (2)	CAN'T DO (1)
A. INITIAL CONTACT WITH COMMUNITY LEADERS				
1. Meet and discuss well improvement with appropriate village leaders and well users, especially - past projects and reasons for success/failure, - current problems with wells, and - current practices regarding water.	4	3	2	1
2. As appropriate, get the village involved in collecting assessment data. Verify the need for upgrading wells in the village.	4	3	2	1
3. Conduct an inventory of existing wells.	4	3	2	1
4. Identify and discuss the potential benefits of a well improvement project in the village.	4	3	2	1
5. Begin to analyze the costs and determine the willingness and ability to pay of the community.	4	3	2	1
6. If appropriate, use existing groups or committees in the community to help organize and monitor the well improvement project.	4	3	2	1
7. Determine the most likely villages for initial projects based on - need, - interest, - leadership, and - technical difficulty.	4	3	2	1
8. Determine who owns the wells and who will benefit from and use them.	4	3	2	1

	DO WELL (4)	DO OKAY (3)	DIFFICULT TO DO (2)	CAN'T DO (1)
9. Help the community make a preliminary decision on whether or not to go ahead with a sanitary improvement project and to determine the overall scope of the project.	4	3	2	1
B. ASSESSMENT				
10. Conduct a technical assessment of the wells targeted for improvement. Find out the method of drawing water; depth, yield, and size of the well; depth to water; quality of the water; and number and type of users. Determine the condition of the lining, headwall, apron, and drainage canal.	4	3	2	1
11. Determine which wells can realistically be improved within the scope of this project, on the basis of the assessment and user preference.	4	3	2	1
12. In consultation with appropriate local users and community representatives, decide which of the wells will be improved.	4	3	2	1
13. Evaluate the consequences to the users of the temporary loss of water from the well being improved.	4	3	2	1
14. Assess the quality and quantity and costs of available resources (materials and labor) for implementing the proposed improvements.	4	3	2	1
15. Determine the availability of material and labor needed for the project.	4	3	2	1
16. Determine the categories and costs of material that must be obtained from outside areas.	4	3	2	1

	DO WELL (4)	DO OKAY (3)	DIFFICULT TO DO (2)	CAN'T DO (1)
C. DESIGN				
17. Identify specific types of improvements needed on individual wells (lining, headwall, apron, drainage canal). Obtain the concurrence of the users for the planned improvements.	4	3	2	1
18. Identify the most appropriate methods available for implementing designated improvements. Factors to consider are costs, types of available material, labor, and equipment, and user preference.	4	3	2	1
19. Develop drawings for the designated improvements.	4	3	2	1
20. List the equipment and materials needed to complete the improvements.	4	3	2	1
21. Assess the labor requirements for the improvements and the technical knowledge needed to accomplish the work.	4	3	2	1
22. Calculate the costs of equipment, material, and labor and discuss them with responsible community leaders.	4	3	2	1
23. Determine the sanitary requirements and discuss who will be responsible for follow-up maintenance of the improved wells.	4	3	2	1
D. PRE-CONSTRUCTION PLANNING				
24. Determine the financial arrangements, including local contributions and outside resources available as appropriate.	4	3	2	1
25. Arrange the logistics of hiring and mobilizing the work force.	4	3	2	1

	DO WELL (4)	DO OKAY (3)	DIFFICULT TO DO (2)	CAN'T DO (1)
26. Purchase, borrow, or construct the necessary tools, equipment, and materials for implementing the designated improvements.	4	3	2	1
27. Arrange for the transportation of the tools, equipment, and materials to the well sites(s).	4	3	2	1
28. Assign responsibility for securing tools and equipment.	4	3	2	1
29. Help users locate alternate sources of water during the construction phase if needed.	4	3	2	1
E. CONSTRUCTION (Based on Design)				
30. Mix and pour appropriate types of concrete.	4	3	2	1
31. Build concrete blocks (if used).	4	3	2	1
32. Construct or improve a concrete headwall.	4	3	2	1
33. Place backfill.	4	3	2	1
34. Pour an apron with a slope and runoff channel.	4	3	2	1
35. Construct a drainage ditch.	4	3	2	1
36. Conduct a well disinfection procedure after the headwall has been installed.	4	3	2	1
37. Construct an appropriate water-lifting device.	4	3	2	1
F. FOLLOW-UP MAINTENANCE				
38. In consultation with responsible local users, develop a plan for periodic disinfection of the well.	4	3	2	1

	DO WELL (4)	DO OKAY (3)	DIFFICULT TO DO (2)	CAN'T DO (1)
39. Determine who will be responsible locally for the ongoing monitoring of the condition of the well.	4	3	2	1
40. Inspect the improvements for construction flaws and educate the responsible persons on how to inspect the improvements in the future.	4	3	2	1
41. Plan for how flaws will be corrected now and in the future.	4	3	2	1
42. Develop appropriate user education sessions, demonstrating clean water handling and storage techniques.	4	3	2	1

GUIDE TO SESSION 3: PROJECT CYCLE AND PLANNING

Total Time: 3 hours 15 minutes

SUBJECT	PROCEDURE	TIME	HANDOUTS/MATERIALS	FLIPCHART REQUIRED
Session Overview	Trainer presentation	5 minutes		
Introduction of the Project Cycle	Trainer presentation	20 minutes	Handout 3-1: The Project Cycle	
Project Cycle Activities	Small groups	35 minutes		Group reports
Project Cycle Activities	Group reports	50 minutes		Group reports
Community Involvement	Trainer presentation	30 minutes		Community involvement strategies
Daily Planning	Discussion	30 minutes		
Review of Learnings	Pair interviews	20 minutes		
Closure	Trainer presentation	5 minutes		

SESSION 3: Project Cycle and Planning

Total Time: 3 hours 15 minutes

OBJECTIVES

By the end of this session, the participants will be able to

- describe a well improvement project cycle,
- identify how and when to involve community members in the selection of well improvement projects, and
- describe a planning process for daily work activities.

OVERVIEW

This session introduces the participants to the notion of a project cycle with five major steps and specific substeps. Appropriate involvement of community individuals and groups in each step is stressed, and methods for securing community involvement are discussed. The importance of planning daily work activities is emphasized and a simple planning process is introduced.

PROCEDURES

1. Session Overview **Time:** 5 minutes

   Share session objectives and provide an overview of this session.

2. Introduction of the Project Cycle **Time:** 20 minutes

   Introduce the five steps of a sanitary improvement project cycle (Handout 3-1: The Project Cycle). Be sure that the project cycle is on a flipchart and posted in a part of the room where it can remain permanently displayed throughout the workshop. The project cycle should be used as a reference for other sessions and each of the construction phases to remind participants where they are in the cycle. Be sure to help the participants understand how the workshop is designed around the steps of the project cycle. In some places during the workshop there may be deviations from the cycle because of the time needed for curing concrete and the time constraints of the schedule. Assure the participants that you will point out when steps are being done out of the normal order.

   Discuss each step of the cycle briefly. Do not go into detail at this point. Emphasize the logical flow from one step to the next.

3. Project Cycle Activities - Small Groups **Time:** 35 minutes

Divide the participants into five groups. Assign each group one step in the project cycle. Each group should complete the following task for its step.

- Identify the key activities that would be included under this step.
- Record these on a flipchart and prepare a brief report (five minutes) to the entire group.
- Take 30 minutes.

4. Project Cycle Activities - Group Reports and Discussion **Time:** 50 minutes

Ask each group to present its report to the group, posting its flipchart on a wall of the room. Start with the group having Step 1 (Pre-planning and Assessment) and move sequentially around the cycle. Keep questions after each presentation to a minimum.

After the last group has finished, distribute Handout 3-1 to the participants. Review each step of the cycle, comparing the responses of the groups with the activities identified in the handout.

5. Community Involvement in the Project Cycle **Time:** 30 minutes

Explain that a major belief reflected in this workshop is that sanitary improvement projects can succeed only if the community and/or appropriate community members are actively involved. Therefore, it is critical for the project promoter to recognize from the outset that this has to be a community project; the community, not the project promoter, needs to have ownership of the project. It is very important to involve key community people from the outset. This does not mean that everyone needs to be involved in every step of the improvement of an individual well, but key people need to be involved in the overall planning, prioritizing, and organizing for the improvements to be made on all the selected wells.

For each of the five major steps in the project cycle, ask the full group to take a few minutes to write down their responses to the following questions:

> Who needs to be involved in each step of the project cycle?
>
> What are some strategies for involving them in this step?

After a few minutes, ask for volunteers to share their responses and write then on the flipchart using the following format.

Step	Who Involved?	How?

The responses need not be detailed. The point here is to begin to discuss strategies for involving community members in the project and to make the participants aware of the importance of doing so from the early stages of the project planning.

Tell the participants that the workshop will frequently deal with ways to involve local community members and strategies for mobilizing interest and support from the community. Mention that one of the next day's activities will be to plan and actually present information on the project at a community meeting.

6. Daily Planning - Discussion **Time:** 30 minutes

Explain the importance of pre-departure planning for daily field activities, particularly for work groups. Such planning improves the productivity and efficiency of the work team.

Have the participants pair off and discuss the key planning steps that need to be carried out prior to the fieldwork. Ask them to be prepared to share their observations with the large group. Give them 10 to 15 minutes to discuss and write down their conclusions.

In a large group discussion, ask for volunteers to share their observations. Record these on a flipchart. Be sure that the following planning points are covered:

- Task identification and clarification.
- Specific steps/activities to be conducted.
- Resources required, including appropriate tools and materials.
- Group organization--individual roles and responsibilities.

Explain that during the workshop, prior to going to the field, the work groups will have an opportunity to plan their activities.

7. Review of Learnings - Pair Interviews **Time:** 20 minutes

Tell participants to pair off for 5 to 10 minutes and share with their partners the most important things they have learned from this session.

Ask a few volunteers to share what they learned with the larger group. Discuss how the new knowledge might be applied in their back-home situations.

8. Closure: Review this Session and Link to the Next **Time:** 5 minutes

MATERIALS

Handout 3-1: The Project Cycle

THE PROJECT CYCLE

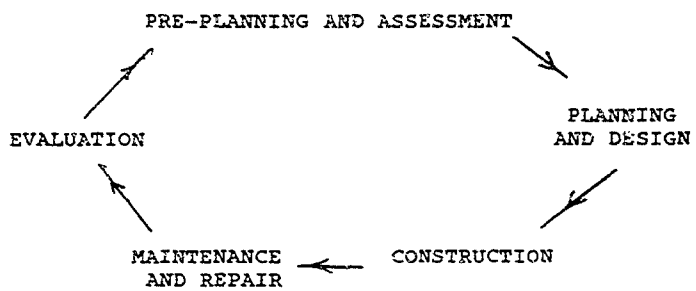

Pre-Planning and Assessment

- Meet and discuss well improvement with appropriate village leaders and well users.
- Conduct inventory of community wells to determine number of wells, general conditions and usage patterns, and overall quality and quantity of water.
- Identify and discuss potential benefits and general costs of a sanitary improvement project.
- Help community make a decision on whether to proceed with a sanitary improvement project.
- Identify with community the overall scope of the proposed project.

Planning and Design

- Conduct a technical assessment on the specific conditions of the wells targeted for improvement.
- Determine what type of improvements are needed (e.g., lining, headwall, drainage, etc.) and what type can realistically be implemented within the scope of this project.
- Design (including rough drawings) each proposed improvement.
- Determine equipment, material, and labor needs.
- Obtain user concurrence for planned improvements and make final decisions with community.
- Calculate and discuss costs.
- Develop work plan and schedule and arrange all logistics.

Construction
(based on design)

- Mix and pour appropriate types of concrete.
- Build concrete blocks (if used).
- Excavate for foundation.
- Place concrete blocks.
- Prepare foundation for apron.
- Cut and assemble rebars.
- Construct or improve concrete headwall.
- Place backfill.
- Pour apron with slope and runoff channel.
- Construct drainage ditch.
- Conduct well disinfection procedure after headwall installation.
- Construct appropriate water lifting device.

Maintenance and Repair

- Develop with responsible local users a plan for periodic disinfection of the well.
- Determine who locally will be responsible for ongoing monitoring of the well condition.
- Inspect for construction flaws and educate responsible persons on how to inspect in the future.
- Plan for how such flaws will be corrected now and in the future.
- Develop appropriate user education sessions demonstrating clean water handling and storage techniques on improved well.

Evaluation

- Reflect on project with community noting any changes which should be made before beginning next well improvement project.
- Determine ways to integrate well improvement projects with other community health and sanitation programs.
- Identify future work for improving village water resources.

GUIDE TO SESSION 4: COMMUNITY WELL ASSESSMENT

Total Time: 6 hours

SUBJECT	PROCEDURE	TIME	HANDOUTS/MATERIALS	FLIPCHART REQUIRED
Session Overview	Trainer presentation	10 minutes		
Community Mobilization Assessment	Trainer presentation	10 minutes		
Overall Assessment of Community Wells	Trainer presentation	15 minutes	Handout 4-1: Overall Assessment of Community Wells	
Technical Assessment of Well Conditions	Trainer presentation	20 minutes	Handout 4-2: Technical Assessment of Well Conditions Handout 4-3: Methods for Determining Water Depth and Well Yields	
Field Task Assignment	Trainer presentation	10 minutes		Team task
Fieldwork Preparation	Team activity	20 minutes		
Well Assessments	Fieldwork	2 hours 30 minutes	Handouts 4-1; 4-2; and 4-3	
Selection Criteria	Lecturette	10 minutes	Handout 4-4: Guidelines for Selecting Wells to Improve	
Field Report Preparation	Team activity	30 minutes		
Field Reports	Team activity	60 minutes		
Recommendations	Discussion	20 minutes		
Review of Learnings	Discussion	10 minutes		
Closure	Trainer presentation	5 minutes		

SESSION 4: Community Well Assessment

Total Time: 6 hours

OBJECTIVES

By the end of this session, the participants will be able to

- assess the general conditions and usage patterns of existing open wells,
- identify community resources available to make necessary sanitary improvements,
- conduct a technical assessment to determine the specific condition of a well and to identify potential improvements, and
- select wells for improvement based on guidelines for improving the sanitary conditions of open wells.

OVERVIEW

This session focuses initially on Pre-Planning and Assessment, Step 1 of the project cycle. The first part of the session is an assessment of the overall need for sanitary improvement of wells. This is done through the use of a survey instrument, Handout 4-1: Assessment of General Conditions of Community Wells, which looks at the general conditions and usage patterns of the wells in the community. The participants practice using this instrument by actually conducting a community survey.

The second part of the session deals with a technical assessment of individual wells being considered for improvement. The participants fill out Handout 4-2: Technical Assessment of Well Conditions for selected wells.

All fieldwork is done in teams of five or six. Upon completion of the fieldwork, each field team analyzes the collected data based on the guidelines for well improvement provided by the trainers. The total group then discusses how to make recommendations and set priorities for needed improvements.

PLANNING NOTE FOR THE TRAINERS: This session requires advance work and arrangements with the village to assure its support. Appropriate wells must be located ahead of time or the participants will waste valuable time looking for wells. In addition, the well owners/users need to be alerted ahead of time to insure their cooperation. They must understand that the purpose of this activity is for training and that it will not result in work actually being done on all of the wells being inspected. The wells selected for this activity should include some that do not meet the criteria for improvements (e.g., physical location inappropriate, wrong size, etc.) and some that would be selected, such as those to be worked on during the workshop. Be sure that the community knows when the trainees will be carrying out the assessments.

PROCEDURES

1. Session Overview **Time:** 10 minutes

Share session objectives and provide an overview of this session in your own words. Be sure to describe the field trips and stress the importance of meeting the people in the community.

2. Community Mobilization and Assessment **Time:** 10 minutes

Refer to the project cycle by stating that this session focuses on Step 1--Pre-Planning and Assessment.

Begin a discussion of how to select communities that are suitable for well improvement projects. Make clear that this discussion is about only the initial steps in the process of selecting a community likely to need/want a well improvement project. Ask what might lead a project promoter to initially explore the possibility of initiating a well improvement project. Be sure you discuss two key indicators:

- poor health and sanitation, high incidence of water related diseases, i.e., dysentery, diarrhea, etc., and
- under-utilized wells.

Explain that several information-gathering steps must be taken after a preliminary determination of need has been established. First, an overall assessment of need must be carried out. This assessment answers general questions about the number and types of wells in use, the available resources in the community for improvement projects, and the general interest in making improvements. This assessment will give a community the necessary information to decide whether or not to implement a sanitary improvement project. If and when the community makes the decision to go ahead and improve the sanitary conditions of existing wells, a more specific technical assessment of each affected well will be undertaken.

Tell the participants that in this session they will carry out both kinds of assessments.

3. Overall Assessment of Community Wells **Time:** 15 minutes

Introduce Handout 4-1: Overall Assessment of Community Wells as an instrument which collects information on the general quality and quantity of water, usage patterns, the overall sanitary conditions of the available wells, and the resources available in the community.

Pass out Handout 4-1: and point out that it is divided into four major sections:

- Types and Conditions of Wells
- Users and Uses

- Need for Improved Sanitation
- Community Resources

Briefly discuss what is included in each of the sections, making sure it is understood.

4. Technical Assessment of Well Conditions **Time:** 20 minutes

Introduce Handout 4-2: Technical Assessment of Well Conditions and remind participants that this form would normally be used only after it had been determined that there was a need to improve the sanitary conditions of the open wells.

Discuss the following:

- The technical assessment identifies the specific conditions and sanitary state of each well being considered for improvements in order to:
  - help the workshop participants and the community determine which wells can be improved and which wells are not appropriate for any improvements and
  - assist the workshop participants and the community in determining the types of improvements needed and prioritizing these improvements.

Pass out Handout 4-2, briefly go over it, and ask if there are any questions.

Pass out Handout 4-3: Methods for Determining Water Depth and Well Yields and give participants time to read it. Answer any questions. Tell the participants they will estimate the well yield as part of doing the technical assessment.

5. Field Task Assignment **Time:** 10 minutes

Divide the group of participants into four teams. Tell them about the community they will survey. Write the following task on a flipchart.

- As a team, carry out the general assessment of community wells, using Handout 4-1. Complete one form per team.
- After you complete the general assessment, carry out the technical assessment as a team, using Handouts 4-2 and 4-3. Complete one form per team for each well inspected. Each team will assess two wells.
- You have three hours.

Provide directions to the teams and tell them which communities and wells to inspect. Be sure that the wells which will actually be improved by the workshop are included in the inspections. It may be necessary for teams to inspect the same wells if a sufficient number of wells is not available in the community.

Tell each team that they will have to report on the results of their assessments when they return from the field.

6. Fieldwork Preparation **Time:** 20 minutes

Tell the teams to get organized for the fieldwork.

7. Well Assessments - Fieldwork **Time:** 2 hours 30 minutes

Have the teams go to the field to carry out their tasks. This activity will carry over into the lunch hour so arrangements for food should be made in advance.

While the participants are in the field, the trainers should be available to answer questions about the survey instrument and to observe the participants' interaction with the community.

8. Selection Criteria - Lecturette **Time:** 10 minutes

After the teams return from the field, give a short lecturette on selection criteria. Explain that in selecting wells for improvements there are many factors that need to be considered. Community resources, needs, and conditions are the primary determining factors. There are certain guidelines which can be used to eliminate wells that should not be considered for sanitary improvements. Pass out Handout 4-4: Guidelines for Selecting Wells To Improve. Base your presentation on the guidelines in Handout 4-4.

9. Field Report Preparation **Time:** 30 minutes

Give each team 30 minutes to prepare its findings from the two assessments. The teams are to present their findings as if they were speaking to a community group. For each well, specific recommendations need to be made as to the advisability of improving the well and the nature of the improvements to be made, if any.

10. Field Reports **Time:** 60 minutes

Ask each team to report its findings and recommendations. Focus on the rationale for each selection.

Make the following points:

- Methods and sources of information will vary from community to community and depend on the project promoter's style and skills in information-gathering.

- It is important that as much information as possible is collected.

- The key to information-gathering is to be sure that the information collected is relevant, valid, and sufficient to enable a community to decide whether to proceed with a sanitary well improvement project.

11. Recommendations - Discussion **Time:** 20 minutes

Lead a total group discussion on the recommendations for improvements. Try to come to agreement on which two wells to improve.

12. Review of Learnings **Time:** 10 minutes

Ask the participants to tell what were the most important things they learned from this session.

Ask what difficulties they anticipate when they begin to implement assessment and selection techniques.

13. Closure: Review this Session and Link to the Next **Time:** 5 minutes

MATERIALS

Handout 4-1: Overall Assessment of Community Wells
Handout 4-2: Technical Assessment of Well Conditions
Handout 4-3: Methods for Determining Water Depth and Well Yields
Handout 4-4: Guidelines for Selecting Wells to Improve

OVERALL ASSESSMENT OF COMMUNITY WELLS

Answering these questions will require both observation and talking to community members.

1. Types and Conditions of Wells

   A. Number of open dug wells in the village
   ___ in use ___ not currently in use

   B. Number of wells covered with handpumps
   ___ in use ___ not currently in use

   C. Describe the general sanitary conditions around the wells.

   D. Describe the general state of repair/disrepair of the wells in use.

   E. Describe the overall quality and quantity of water available.

2. Users and Uses

   Collect information and opinions on water use in the community. Interview a number of users and form your own opinion.

   A. What sources of water do people use in the community?

   B. What sources have the best water for drinking?

   C. What purposes other than drinking do people use water for? What do they use well water for?

   D. What do people use to collect water? E.g., a bucket?

   E. How do people store water in the home?

   F. Will users maintain and keep up the sanitary conditions around the wells and carry out periodic maintenance tasks?

G. Is there (or could there be) a community group able to oversee the continued maintenance of the improved wells?

3. Need for Improved Sanitation

A. What health problems are there which may relate to water?

B. Are open wells the main source of drinking water?

C. Are animals allowed to wander close to the well?

D. Are the wells adequately protected from animals and other sources of contamination?

4. Community Resources

A. What types of material are available?

___ lumber
___ tools
___ bricks
___ masonry stone
___ cement
___ sand
___ gravel

B. What types of laborers are available? How many?

___ semi-skilled
___ mason
___ carpenter

C. What type of transportation is available?

D. Are users willing and able to commit time and support to improvement projects?

TECHNICAL ASSESSMENT OF WELL CONDITIONS

Name or location of well _____

Fill out this form for each well inspected. Answering these questions requires mostly observation, except for Question 2.

1. What is the inside diameter (in centimeters) of the well?

2. Check the items which best describe the location of the well.

   A. On a hill ___; in a valley ___; in or near a wadi* ___ .

   B. Distance from privy, greater than 15 meters ___; less than 15 meters* ___ .

   Higher than privy ___; lower than privy* ___ .

   C. In village ___; in field ___; distance to village (in meters) ___ .

3. Well history (check appropriate responses). You will need to talk to some community members to answer questions 3A to 3G.

   A. Approximate age: ___ years.

   B. Built by: village ___; government agency ___; other ___ .

   C. Owned by: private ___; public with multiple use ___ .

   D. Estimated number of people depending on well for domestic use ___ .

   E. Usage: Domestic: for use in home ___; laundry near well ___ .

   Bathing near well ___ .

   Livestock near well ___ .

   Irrigation ___ .

   Abandoned* ___; why _____; when _____.

   F. Does the well go dry? Yes___; No___ .

   Every year? Yes ___; No ___ . If yes, when?

   Some years? Yes ___; No ___ .

   G. Is there enough water for all users (20 liters per person per day)? if no, how much do you estimate is available in liters per person per day?

   During wet season? _____; during dry season? _____.

4. Depth (in meters) from ground surface to water level ___; bottom of well ___ .

5. Estimated yield: _____ liters per day. (Base your answers on information provided by users.)

6. Quality of water: good ___; brackish (salty) ___; smelly ___ .

7. The well is open ___; partially covered ___.

8. Describe the methods of getting water: pump ___; bucket ___ .
   Is the rope protected? Yes ___; no ___.
   Is the bucket kept off the ground? Yes ___; no ___.
   (If yes, describe how.)

9. A. Is there an apron around the well? Yes ___; no ___.

   B. If yes, give the approximate size of the apron. _____ x _____.

   C.

Type of apron	Condition: Good	Condition: Needs Repair
___ Concrete	___	___
___ Masonry	___	___
___ Other (describe)	___	___

   If you checked "needs repair," describe conditions.

10. Is there a headwall for the well? Yes ___; no ___.

    If yes, give the approximate size of the headwall.

    C.

Type of headwall	Condition: Good	Condition: Needs Repair
___ Concrete	___	___
___ Masonry	___	___
___ Other (describe)	___	___

    If you checked "needs repair," describe conditions.

11. Is there a drainage ditch or channel carrying water away from the well?
    Yes ___; no ___.
    If yes,
    A. Is the ditch lined? Yes ___; no ___.
    B. What type of lining? _____
    C. What is the length (in meters) of the ditch? _____.
    D. Where is water drained? Open field_____;
    soakaway_____;
    other (describe)_____.

12. Is well lined? Yes ___; no ___.
    If yes, what material is used for lining? _____.
    Describe condition of lining _____.
    What is the thickness of the lining? _____.

13. Describe soil type at well:
    A. Ground surface: stable___; rocky___; unstable___.
    B. Walls of well: rocky____; stable____; unstable*_____.

14. Conditions around well. Check the appropriate descriptions.
    A. Free of standing water or muddy pools_____.
    B. Pools of standing water_____.
    C. Signs of animal droppings_____.
    D. Place for washing clothes_____; type_____; distance (in meters) from well _____.
    E. Place for watering animals_____; type_____; distance (in meters) from well _____.

15. Visible evidence of floating material in well_____; type_____.

METHODS FOR DETERMINING WATER DEPTH AND WELL YIELDS

Method for Measuring Depth to Water

(1) Acquire a string or thin (light) rope approximately 5 to 6 meters long to which a small weight (bolt, rock) can be securely tied at one end.

(2) Measure the rope and mark it off at intervals of 25 centimeters using small pieces of string, or colored paint, ball point pen, etc.

(3) Securely holding one end of the rope, drop the weighted end into the well until you hear the weight strike the water.

(4) Holding the rope against the top edge of the headwall (if there is one) or the surface of the ground, note the closest mark on the rope.

(5) Write this measurement to the closest quarter-meter mark on the inventory sheet for that well.

Method for Measuring Depth of Well

(6) Next, drop the weighted end of the rope into the water and play it out until it goes slack.

(7) Bounce (jiggle) the weighted end to make sure it has reached the bottom of the well and not just a ledge.

(8) If the same measurement is seen after several attempts, the bottom of well has been reached.

(9) Again holding the rope against the same point on the top edge of the headwall (if there is one) or the surface of the ground, note the closest quarter-meter mark on the rope.

(10) Write this measurement on the inventory sheet for that well.

Method for Determining Well Yield: The purpose of estimating the yield is to quantify the productivity of the well. This will help in deciding whether it is worth improving the well.

The simplest method for determining yield is to ask the well users if the well provides enough water for their families, especially in the dry season. An estimate of 20 liters per day per person is a generally accepted minimum, although it may be lower in some areas.

GUIDELINES FOR SELECTING WELLS TO IMPROVE

- Physical location: If the well is located in or near a stream or wadi or within 100 feet of a privy it cannot be improved by this type of sanitary improvement project, as the location is inappropriate.

- Well size: If the well is significantly less than 1.5 meters in diameter or more than 1.5 meters in diameter, improvements will probably be too difficult to implement or too costly to be feasible.

- Well usage: If the well dries up on a seasonal basis or has been abandoned, it probably needs work to increase the water yield, not sanitary improvements.

- Number of users: The well with the most users should be highest on the priority list.

- Condition of the area around the well: If the ground surface is obviously contaminated with standing pools of water and if cattle have easy access to the well area, then sanitary improvements are needed.

- Soil conditions at the well: A stable soil is necessary to sustain the foundation for the apron and headwall and also to prevent the walls from caving in.

- Attitude of users: For the project to be a success, users must cooperate in the protection of the well, particularly with labor and local materials, as well as financially.

Other guidelines may include:

- Village committee: It can be helpful for a village committee to coordinate the village participation. This may be a village health committee, a village development committee, or some other type of committee.

- Liaison between the village and the national or regional agency responsible for rural water supply and sanitation: Liaison will provide backstopping during the improvement and after the work is completed.

GUIDE TO SESSION 5: DECISION-MAKING AND COMMUNITY INVOLVEMENT

Total Time: 3 hours 30 minutes

SUBJECT	PROCEDURE	TIME	HANDOUTS/MATERIALS	FLIPCHART REQUIRED
Session Overview	Trainer presentation	10 minutes		
Introduction to Community Decision-Making	Trainer presentation	10 minutes		
Community Meeting Presentation	Small group task	40 minutes		
Community Meeting Presentation	Group preparation	30 minutes		
Community Meeting	Group presentations	90 minutes		
Evaluation of the Presentations	Discussion	20 minutes		
Application	Individual task	10 minutes		
Closure	Trainer presentation	5 minutes		

SESSION 5: Decision-Making and Community Involvement

Total Time: 3 hours 30 minutes

OBJECTIVES

By the end of this session the participants will be able to

- make recommendations to a community on improvements to be made,
- assist a community to analyze information and prioritize needs for the improvement of wells, and
- assist a community to make a decision regarding a well improvement project based on the conditions of the wells, community resources, and overall needs.

OVERVIEW

This session gives the participants the opportunity to attend an actual community meeting and make formal presentations on the proposed well improvements. Participants learn how to make recommendations to the community on the kinds of improvements to be made and how to assist the community in making a decision on whether to proceed with the project.

PLANNING NOTE FOR TRAINERS:

Before the session notify the appropriate leaders of the community concerning the rationale for and location and timing of the meeting and insure their participation.

PROCEDURES

1. Session Overview **Time:** 10 minutes

   Share session objectives and provide an overview in your own words.

2. Introduction to Community Decision-Making **Time:** 10 minutes

   Introduce the topic and state the following:

   Once the need for a well improvement project and the availability of the necessary resources are established, the community must be fully informed and allowed to decide if it wants to commit itself to such a project.

To assist the community in making the decision, it is necessary to determine in advance what kinds of information the community needs in order to make a go/no-go decision about initiating a sanitary improvement project. First, how do the people in the community feel about the need for well improvements? It is particularly important to get input from the women on this point. Other information comes from the two assessments and from a general knowledge of the community. The need for sanitary improvements and the potential benefits are often difficult for community members to understand. Selling the project based on health benefits alone may be difficult.

3. Community Meeting Presentation - Small Group Task **Time:** 40 minutes

Assign the following tasks to the same teams who conducted the assessments in Session 4:

- Based on what you learned from the community well assessment, design a presentation to be given at a community meeting set for that evening.
- Use visual aids.
- Take 30 minutes.

All relevant information must be included and the use of appropriate visual aids should be encouraged.

Assign specific subjects to the teams as follows:

Team 1. Discussion of the general health and sanitation of the community; water-related diseases, i.e., dysentery, diarrhea, etc.; problems of water contamination; and the need for water source protection.

Team 2. Findings on users and uses.

Team 3. Results of the technical assessment.

Team 4. Improvements recommended. Discuss the wells selected for improvement during the workshop. Explain the improvements to be done. Describe the need for community support with particular reference to the involvement of women.

4. Community Meeting Presentation - Group Preparation **Time:** 30 minutes

Ask each team to report briefly on what it will say during the community meeting. The purpose of this step is to make sure the teams have a coordinated presentation.

5. Community Meeting **Time:** 90 minutes

Give each group 15 minutes to make its presentation. Be sure that the community is clear that the primary purpose of the workshop is to provide a learning experience for the participants.

6. Evaluation of the Presentation **Time:** 20 minutes

On the morning of the next day discuss these topics with the entire group:

- What did you like about the presentations? Why?
- What would you have done differently. Why?
- What, in general, does a community promoter need to keep in mind about information-gathering and information-giving at this stage of the project cycle?

7. Application **Time:** 10 minutes

Ask participants to respond individually to the following questions:

- What have you learned about the community decision-making phase of a well improvement project which may be useful in your work?
- How can women collaborate in the decision-making phase and afterwards?

8. Closure: Review this Session and Link to the Next **Time:** 5 minutes

GUIDE TO SESSION 6: PREPARATION FOR FIELDWORK

Total Time: 2 hours 30 minutes

SUBJECT	PROCEDURE	TIME	HANDOUTS/MATERIALS	FLIPCHART REQUIRED
Session Overview	Trainer presentation	5 minutes		
Introduction to the Field Project	Lecturette	20 minutes		Summary of field project
Description of Major Improvements	Trainer presentation	30 minutes	Handout 6-1: Protection of Open Wells	Construction plan
Review of Construction Schedule	Trainer presentation	10 minutes	Handout 6-2: List of Tools and Materials Needed for Protection of Open Wells	Workshop schedule
Selection of Construction Teams	Group activity	30 minutes	Handout 6-3: Glossary of Terms Used in Construction	
Materials and Tools	Trainer presentation	15 minutes		
Glossary	Trainer presentation	15 minutes		
Preparation for Construction	Trainer presentation	20 minutes		Construction tasks
Closure	Trainer presentation	5 minutes		

SESSION 6: Preparation for Fieldwork

Total Time: 2 hours 30 minutes

OBJECTIVES

At the end of this session, the participants will be able to

- describe the construction steps and schedule for the field project and
- explain how the well will be improved upon completion of the project.

OVERVIEW

This session gives the participants an overview of the total construction project. Each well is described as it is and as it will be after the improvements have been made. A schedule of major construction activities is provided and major tasks are discussed. Construction teams are formed and participants work briefly in these teams. Materials and tools as well as other preparation tasks are reviewed.

PLANNING NOTE FOR TRAINERS: Prior to the beginning of the workshop, the workshop staff, the community, and any appropriate local government officials should have jointly selected the wells to be improved.

PROCEDURES

1. Overview of Objectives and Activities **Time:** 5 minutes

   Provide an overview of this session and share session objectives.

2. Introduction to the Field Project - Lecturette **Time:** 20 minutes

   Explain to the participants that for the following days they will all be involved in actual construction work to make significant sanitary improvements on two open dug wells.

   Describe the current state of the two wells, referring to the technical assessments that were carried out in Session 4. Be sure it is clear that the wells are unprotected open hand-dug wells that the villagers have been drinking water out of for some time. The participants should understand why these two wells were selected for improvements.

   Make sure the participants realize that they will actually carry out the construction tasks. This is not only a training exercise but also an actual improvement project for the users.

Provide the following information (write it on a flipchart):

The construction project will

- make all the possible improvements on the surface area of the well to make it sanitary (short of lining the entire well, closing it, and putting a handpump on it);
- result in an incremental improvement in the water supply, making it more potable by creating a more sanitary surface area and by disinfecting the well water;
- include a user education component to enable well users to maintain appropriate sanitary conditions around the well; and
- involve relatively low cost, simple construction tasks that can be accomplished during the workshop time.

3. Description of Major Improvements **Time:** 30 minutes

Give participants a drawing of the proposed improvements (Handout 6-1: Protection of Open Wells) and help them visualize the difference between the current state of the well and the improved state. Then discuss the following construction plan. (Write it on a flipchart.)

Construction Plan

A. Excavate around the upper edge of the well and place a concrete foundation there to be used as a support for the apron and headwall.

B. Fabricate some concrete blocks for use in building the headwall and apron.

C. Construct a sloped concrete apron around the well.

D. Build a concrete block headwall to surround the well opening.

E. Build and install an appropriate water lifting device.

Tell the participants you will explain each construction step in detail just before they are to carry it out. Explain that at this point, you want the participants simply to arrive at a general understanding of the construction plan; they are not yet expected to know how to implement each step of the plan.

Summarize by stating that this plan for improving an open dug well was adopted for the following reasons:

- The improvements will lead to better health among the villagers -- the quality of the water will improve and incidence of water-related diseases will decrease.

- The plan is relatively low cost.

- The necessary materials and equipment are generally available.

- The technology is relatively simple and can be mastered by the villagers.

- The plan will improve aesthetic conditions around the well.

- The well is in stable soil and can support these types of improvements, without caving in.

4. Review of Construction Schedule **Time:** 10 minutes

Go over the workshop schedule briefly, pointing out when the construction sessions will take place and explaining that these sessions will combine classroom work and fieldwork.

5. Selection of Construction Teams **Time:** 30 minutes

Tell the participants that construction teams will now be set up. They will remain in these teams for most of the construction tasks. Two teams will be assigned to each well. Tasks will be divided up between the teams so that participants will not have to stand around waiting for their turn. It is important for each team to obtain hands-on experience with each of the construction tasks.

Explain that the teams will be made up of individuals with different levels of experience. Have the participants separate into two groups: those with some construction experience and those with no construction experience.

The participants should form four teams with a roughly equal number from each group of construction experience. Assign two groups to each well.

After the teams have been formed, ask each member to tell his teammates what skills he is particularly interested in learning or practicing during the construction. Give the teams about 20 minutes for this discussion.

6. Materials and Tools **Time:** 15 minutes

Show the participants a list of the tools and materials they will be using to construct the planned improvements (Handout 6-2: List of Tools and Materials Needed for Protection of Open Wells). In particular, describe any tool which is commonly misused or unfamiliar.

7. Glossary **Time:** 15 minutes

Distribute Handout 6-3: Glossary of Terms Used in Construction and make sure all the participants understand all the terms on the list.

8. Preparation for Construction **Time:** 20 minutes

Explain the preparatory work that was completed prior to the workshop. Emphasize the importance of preparation and planning that must be done before construction can begin. Discuss the following tasks. (Write them on a flipchart.)

- Order all necessary materials and equipment (as listed in Handout 6-2).
- Clear and prepare the well site.
- Rough grade the surface area around the well.
- Build or purchase concrete blocks for the foundation and headwall.
- Cut lumber for forms and other uses.
- Arrange for the work crew to be available at the appointed time.

9. Closure: Review this Session and Link to the Next **Time:** 5 minutes

Be sure all questions have been answered about the field project and the improvements to be made for the selected wells.

MATERIALS

Handout 6-1: Protection of Open Wells
Handout 6-2: List of Tools and Materials Needed for Protection of Open Wells
Handout 6-3: Glossary of Terms Used in Construction

PROTECTION OF OPEN WELLS

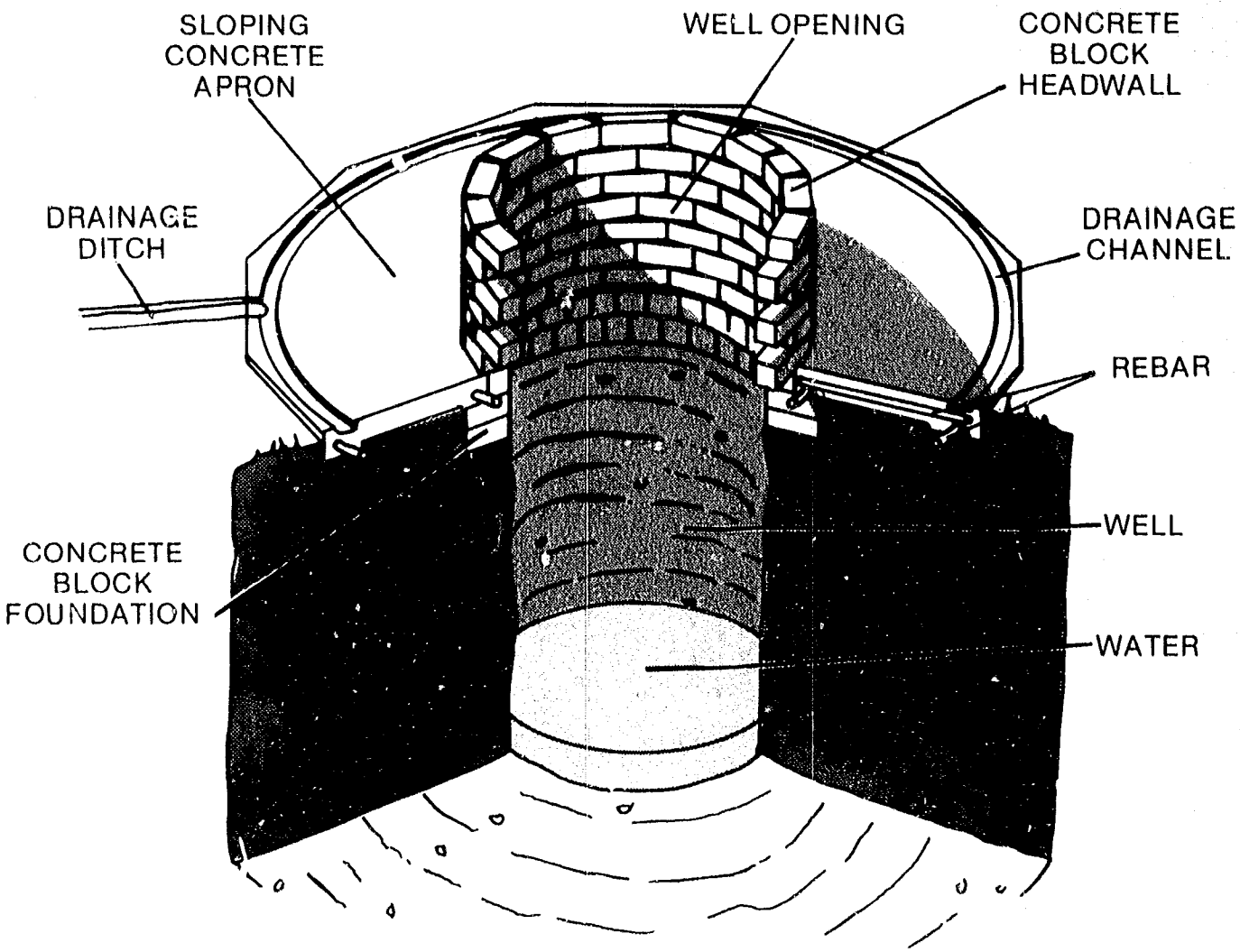

LIST OF TOOLS AND MATERIALS NEEDED

Materials needed	Tools needed for each team
cement	metric tape
sand	axe
gravel	carpenter's level
10 mm rebar	flat blade shovel
3 mm rebar	round blade shovel
tie wire	bucket
nails	hammer
wood	crowbar
rope	mixing pad
	wheelbarrow
	steel trowel
	bar cutter
	pliers
	plumb bob
	saw

GLOSSARY OF TERMS USED IN CONSTRUCTION

BERM: A narrow ridge to serve as a form for the outer edge of the concrete apron. A berm is made of a semi-dry mixture of cement and dirt and some water (1 part cement to 6 parts dirt free of vegetation).

CARPENTER'S LEVEL: A straight-edge piece of wood or metal usually about 1 meter long, with an insert containing a small bubble placed on top in the center. When the device is in a horizontal position, the bubble will be in the center of the insert if both ends are at the same level. A line drawn along the top or bottom of the device will be level.

CONCRETE MIX: A concrete mix is usually expressed as the parts of cement to sand and to stone. A 1:2:4 mix consists of 1 sack of cement (a cement sack holds about 25 liters or 1 cubic foot), 2 sacks of sand, and 4 sacks of gravel. Enough water is added to the mix to make a mass which can be worked into the forms but which is not soupy or runny. The total volume of the mix is somewhat less than the sum of the parts, as the cement and sand fill some of the spaces between the pieces of gravel. Depending on the size of the sand and gravel, the total volume of the 1:2:4 mix will probably be about five times the volume of the cement used.

FLOAT: A flat piece of wood or metal about 10 cm wide and 20 cm long, with a handle fastened to it. A float is used for the final finishing of a flat concrete surface after it has partially set but is still not hard. The worker moves the float on the concrete surface with a circular motion to draw moisture to the surface for a final finish. A metal float is used to obtain a smooth concrete surface. A wooden float is used to obtain a rather rough non-skid surface suitable for a concrete apron. (The apron would be slippery if it was finished with a metal float.)

FORMS: Forms are used to mold wet concrete to the shape desired. The forms may be made of wood, metal, or other materials. For this workshop, the forms for the concrete blocks will be made of wood, as it is easy to work with and generally available. For the apron, the top layer of concrete blocks in the foundation will serve as the inner form. A temporary berm of weak concrete made of cement and dirt will be used as the form for the outer edge of the apron.

MORTAR: A mixture of water, sand, and cement and/or lime. Mortar for this workshop will consist of 1 part cement and 3 parts of clean sand mixed with sufficient clean water to make a firm mortar mixture that will spread easily with a trowel but will not run. The mortar must adhere to the surface of the concrete blocks when applied with the trowel and stay in place between the vertical faces of the concrete blocks without running out.

PLUMB BOB: A weight attached to the end of a line used to indicate a vertical direction when hanging freely. All points on the line are vertically above the reference point at the lower end of the line.

POUR: When concrete is placed in a form it is called a concrete "pour" although it is usually shoveled into place or emptied from a wheelbarrow into the formed area.

REBAR: An abbreviation for "reinforcing steel bar" used in concrete structures to add tensile strength to concrete, which is strong when compressed but comparatively weak when pulled or bent. Rebars are often roughened on the surface to increase their bond with the concrete. Smooth bars may be used when the stress on the concrete is not too great.

SET: The chemicals in the cement react with the water and then the water begins to evaporate and the concrete hardens and is said to have set. As the moisture evaporates the concrete becomes stronger and, by the end of seven days, should have reached full strength. After one day it is strong enough to walk on but is still fragile and will crumble when struck on an edge. By the end of two days the concrete should be hard enough to walk on for constructing the headwall.

SCREED: A straight-edge piece (usually of wood) 5 cm x 10 cm or 5 cm x 15 cm for leveling and smoothing (screeding) recently poured concrete. The screed rests on two supports and is moved backward and forward over the fresh concrete surface.

TROWEL: A flat metal plate, triangular in shape, 15 or 20 cm long, with a handle fastened to it. The trowel is used for placing and working cement mortar in brick, concrete block, and masonry construction.

VIBRATE: Fresh concrete is vibrated after it is poured into place to assure that it fills all the spaces inside the form. To vibrate the concrete, the worker moves a shovel or flat stick up and down in the concrete after it has been poured. Sometimes mechanical vibrators are used, but they are expensive and require either a gasoline or electric motor to run them.

GUIDE TO SESSION 7: EXCAVATING FOR THE FOUNDATION

Total Time: 4 hours 15 minutes

SUBJECT	PROCEDURE	TIME	HANDOUTS/MATERIALS	FLIPCHART REQUIRED
Session Overview	Trainer presentation	5 minutes		
Concrete Foundation	Lecturette	30 minutes	Handout 7-1: Determining the Diameter of the Foundation Circle Handout 7-2: Locating the Well Center and the Foundation Ledge; Excavating the Ledge	
Team Preparation	Team activity	30 minutes		
Setting Leveling Stakes	Demonstration and fieldwork	2 hours 30 minutes		
Review of Learnings	Team discussion	20 minutes		
Team Reports	Team activity	15 minutes		
Closure	Trainer presentation	5 minutes		

SESSION 7: Excavating for the Foundation

Total Time: 4 hours 15 minutes

OBJECTIVES

At the end of this session the participants will be able to

- determine the center of a well and set leveling stakes,
- level and excavate for a concrete block foundation, and
- work as part of a team on construction tasks.

OVERVIEW

This session starts the hands-on construction phase of the project. The first step in the well improvement process is establishing the center of the well. All horizontal measurements will use this center point as a reference. Once this point is established the participants will excavate around the upper part of the well to get ready for the placement of a concrete block foundation.

This session begins with a classroom discussion of the method for establishing the center of the well and the procedures for leveling and excavating for the concrete foundation. The teams then move to the field where they are given a short demonstration of how to use a carpenter's level. The teams spend the rest of the day in the field excavating for the foundation. The session concludes with a review and summary of learnings.

PROCEDURES

1. Session Overview **Time:** 5 minutes

   Review the session goals and provide an overview of the activities. Remind participants that they will be working on this field project for the next seven days.

   Tell participants they will be focusing on excavating the site today, but before excavation can begin the center of the well must be established. This center point will be used as a reference for determining the placement of the foundation, the apron, and the headwall.

2. Concrete Foundations - Lecturette **Time:** 30 minutes

   Begin the lecturette by explaining the purpose of a solid foundation. State that a solid foundation at the upper edge of an open well

- provides support for the concrete apron and headwall and

- prevents dirt at the upper edge of the well from sliding into the well.

Success in protecting an open well is highly dependent on the care with which the the concrete foundation is placed. Ask the participants to review the construction sketch in Handout 6-1 to visualize the excavation work.

Distribute Handout 7-1: Determining the Diameter of the Foundation Circle and discuss how the theoretical diameter of a well can be found using two sticks/poles and the formulas in the handout. Be prepared to offer a quick demonstration, if necessary.

Distribute Handout 7-2: Locating the Well Center and the Foundation Ledge; Excavating the Ledge. Using the diagram in the handout, quickly explain each of the seven steps. Reassure the participants that you will go over this material again in the field.

Explain that excavating for the foundation has the following requirement: The bottom of the excavation must be level and deep enough so that the upper layer of blocks in the concrete foundation is also level and the top surface is at the same level as the proposed finished surface of the apron. The upper layer of blocks will serve as the inner form for the apron and as support for the screed, and for leveling the ground surface around the apron.

3. Team Preparation **Time:** 30 minutes

Give the teams 20 to 30 minutes to prepare for the fieldwork. The fieldwork will consist of setting the leveling stakes and excavating the foundation. The teams should refer to Handouts 7-1 and 7-2.

Remind participants that as team members they should

- pay attention to how the work is organized,

- give each other sufficient opportunity to have hands-on practice, and

- take into account the strengths, skills, and learning needs of each team member.

At the end of the team planning, send the teams to the field.

4. Setting Leveling Stakes - Demonstration and Fieldwork **Time:** 2 hours 30 minutes

Give a short demonstration of setting the leveling stakes. Show how to use a carpenter's level to make level reference points. If a carpenter's

level is not readily available, an alternative would be a translucent hose which allows the water level to be seen (Handout 15-2, item 2 gives an explanation on how to use a hose for leveling.) Then ask all of the teams to work on setting the leveling stakes. Handouts 7-1 and 7-2 should be used as references. Give 30 minutes to complete these tasks. During this time the trainer has three basic roles:

- to act as a resource person;
- to pose questions, such as:
  - If you continue doing that task the way you are, what do you think will happen?
  - Is there a more efficient way to organize this task?
- to observe closely the work being done to spot problems or confusion about the tasks.

Have the teams carry out the excavation for the foundation as described in Handout 7-2. It may only be possible for one team at a time to work on the excavation. Return to the classroom after the fieldwork.

5. Review of Learnings - Team Discussions **Time:** 20 minutes.

Each of the teams should discuss

- how they worked together as a team and
- what they learned about leveling and excavating.

Also they should raise any questions or concerns they have about the field project.

6. Team Reports - Group Discussion **Time:** 15 minutes

Ask for a brief report from each team. Discuss questions, concerns, and learnings as appropriate.

7. Closure: Review this Session and Link to the Nex` **Time:** 5 minutes

MATERIALS

Handout 7-1: Determining the Diameter of the Foundation Circle
Handout 7-2: Locating the Well Center and the Foundation Ledge; Excavating the Ledge

DETERMINING THE DIAMETER OF THE FOUNDATION CIRCLE

Establish two perpendicular diameters as shown in figure, by laying two sticks across the well so that they cross in the middle. Move the sticks around until they bisect each other. The point at which they bisect is the theoretical center of the well. The distance to the inside of the foundation wall will be measured from the center. With the sticks in this position, measure the diameters. Record dimensions A and B.

To calculate the diameter of the foundation circle, add the two diameters together and divide by two:

For example: 1.54 + 1.46 = 3.00 m
3.00 m ÷ 2 = 1.50 m

The radius will equal one-half the diameter: 1.50 m ÷ 2 = 0.75 m

Note: The theoretical diameter of 1.50 m will be used in the examples as the basis for calculations.

DETERMINING THE DIAMETER OF THE FOUNDATION CIRCLE

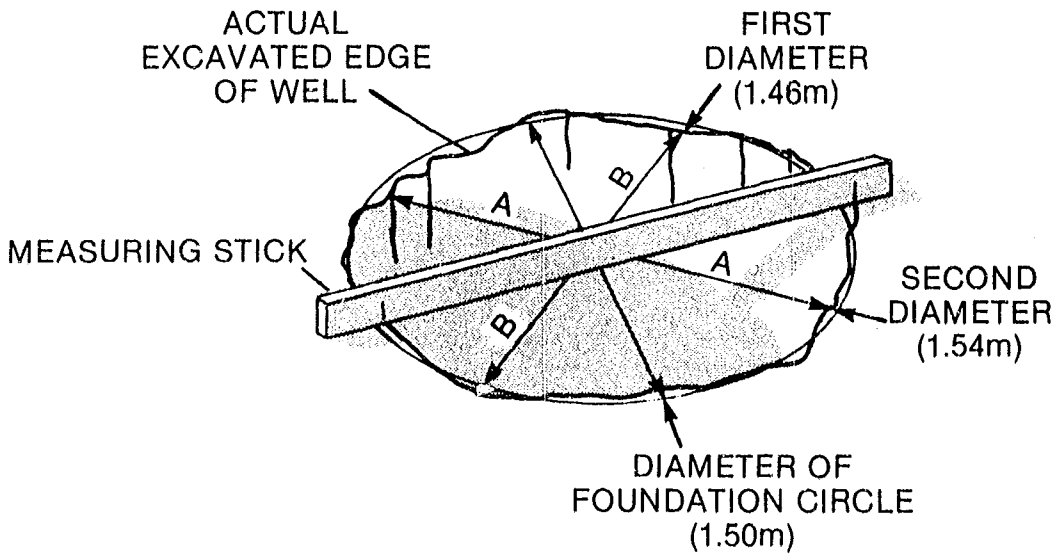

LOCATING THE WELL CENTER AND THE FOUNDATION LEDGE; EXCAVATING THE LEDGE

(Based on a well with a diameter of 1.5 meters)

Step 1: Rough grade the area around the well and establish an even, level surface.

Step 2: Set leveling support stakes 1, 2, 3, and 4. Refer to the figure on 7-2, page 3, to determine where to place the stakes.

Step 3: Measure up 13 cm from the level (rough grade) established in Step 1 and mark with a line on stake 1.

Step 4: With the long straight edge (5 cm x 10 cm x 270 cm) and the carpenter's level, mark stakes 2, 3, and 4 at the same level as stake 1. Then mark stakes 5, 6, 7, and 8.

Step 5: To make the centering cross, two pieces of wood measuring 5 cm x 10 cm x 270 cm will be needed along with a short piece measuring 2.5 cm x 5 cm x 30 cm for nailing the cross pieces together. One of the long pieces must be cut in the middle to make two pieces (5 cm x 10 cm x 135 cm). These will be butted against either side of the center of the other long piece and nailed to it using the short piece (see figure). Position the cross over the center of the well by making sure that dimensions A and B (from Handout 7-1) are duplicated. Once the cross is centered, nail the centering cross to stakes 1, 2, 3, and 4 at the level marks (13 cm in height).

Step 6: Tie a plumb bob line at the intersection of the two pieces of the centering cross (the center of the well).

Step 7: Measure in horizontally 1.20 m from the plumb bob line to determine the width of the ledge for the foundation blocks.

Step 8: Cut a measuring stick and measure down 47 cm from the bottom edge of the centering cross to determine the depth of the ledge. The ledge must be large enough to accommodate two layers of blocks and the mortar between them. (Based on concrete blocks measuring 15 cm x 20 cm x 40 cm.)

Step 9: Excavate the ledge carefully, throwing the dirt away from the well onto the apron area for use in fine grading that area. The bottom of the ledge must be level and the inner edge away from the well must be as vertical as possible.

Note: If the circumference of the well is very irregular, some of the foundation blocks may hang over the edge (see Session 8). Check the width of the foundation ledge to make sure that the first course of blocks does not hang over the edge. If there is more than 1 or 2 cm of overhang, the ledge

should be widened. However, this will increase the diameter of the foundation circle.

MATERIAL FOR ONE WELL

8 leveling stakes - 5 cm x 5 cm x 20 cm
2 centering cross pieces - 5 cm x 10 cm x 270 cm
1 short piece to nail cross together - 2.5 cm x 5 cm x 30 cm
4 measuring sticks - 2.5 cm x 5 cm x 50 cm
nails

EQUIPMENT FOR ONE WELL

1 metric tape
2 axes
2 hammers
2 carpenter's levels, about 1 meter long
2 round blade shovels
2 flat blade shovels

Note: There may be room enough for only one team to work on the excavation at a time.

DETERMINATION OF CENTER OF WELL & EXCAVATION FOR CONCRETE BLOCK FOUNDATION

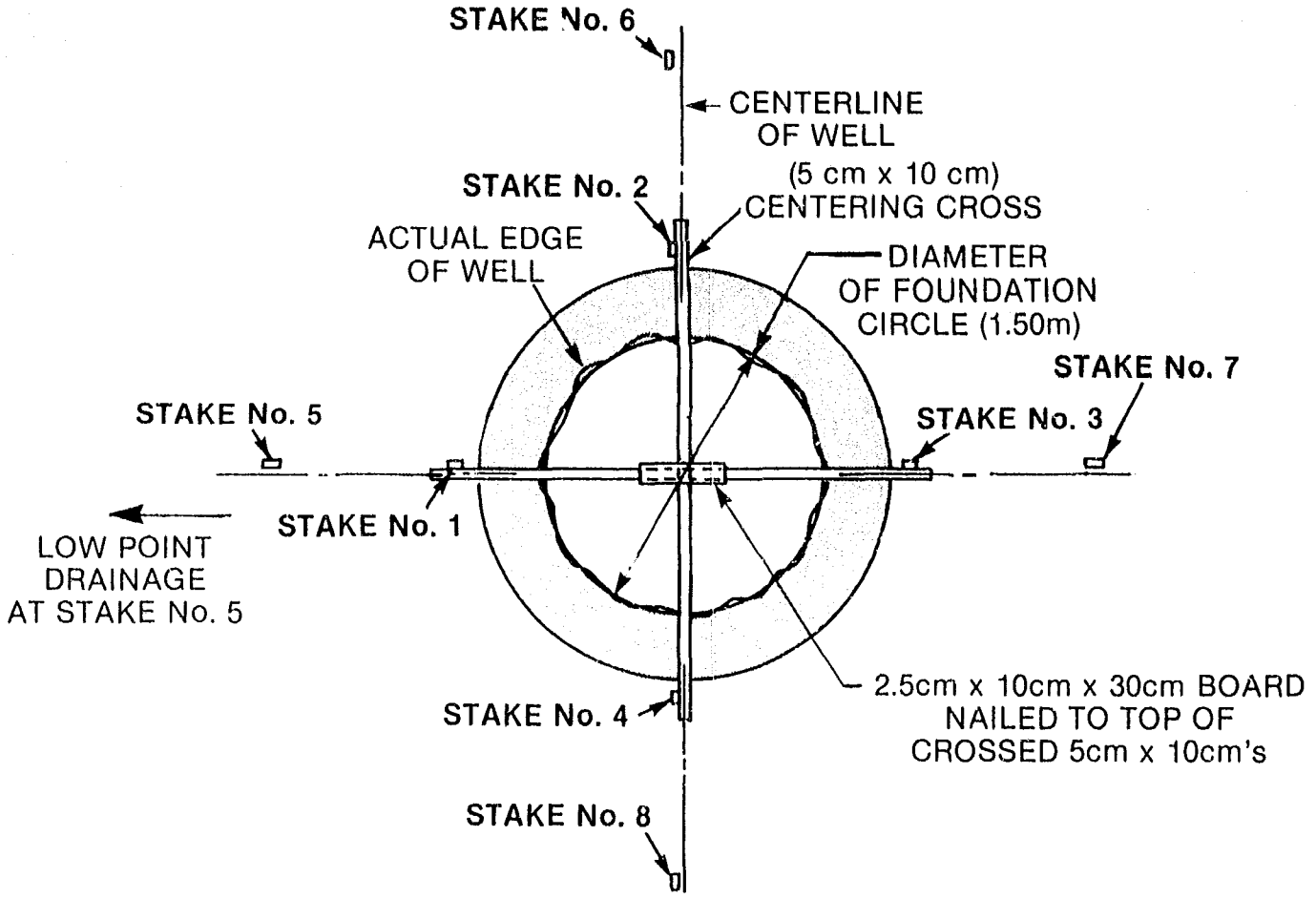

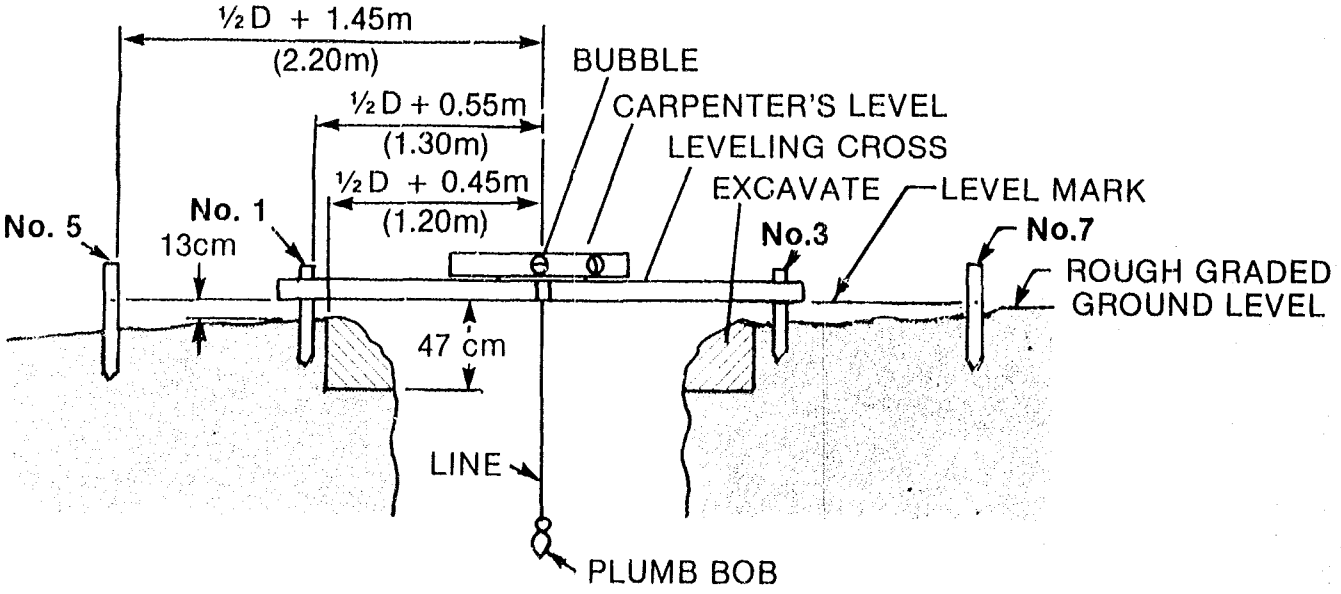

BASED ON CONCRETE BLOCK OF 15cm x 20cm x 40cm

GUIDE TO SESSION 8: BUILDING A CONCRETE BLOCK FOUNDATION

Total Time: 4 hours

SUBJECT	PROCEDURE	TIME	HANDOUTS/MATERIALS	FLIPCHART REQUIRED
Overview	Trainer presentation	5 minutes		
Placing Concrete Blocks	Lecturette	20 minutes	Handout 8-1: Placement of Concrete Block Foundation	
Team Preparation	Team activity	20 minutes		
Mixing Mortar	Demonstration	20 minutes		
Fieldwork	Team activity	2-3 hours		
Lessons Learned	Group discussion	30 minutes		
Closure	Trainer presentation	5 minutes		

SESSION 8: Building a Concrete Block Foundation

Total Time: 4 hours

OBJECTIVES

At the end of this session the participants will be able to

- place three layers of concrete blocks to construct a foundation for the apron and headwall and
- mix, prepare, and use cement mortar.

OVERVIEW

In this session the participants place the first two layers of concrete blocks for the foundation. Normally the first major construction phase is to form and pour the concrete blocks for use in the foundation. However, given the sequencing of tasks for this workshop it is necessary to build the foundation and apron early on so that there is enough time for it to cure. Therefore, pre-made or purchased blocks are used for this step. Participants will learn how to make forms and pour concrete to construct the blocks in a later session.

This session begins with a lecturette on placing the concrete blocks, followed by a short demonstration in the field of how to mix cement mortar. The participants spend the rest of the session laying the concrete blocks.

PROCEDURES

1. Overview of Objectives and Activities **Time:** 5 minutes

   Share session goals and provide an overview of the activities. Tell participants they will be spending most of the morning in the field placing concrete blocks to build the foundation.

2. Placing Concrete Blocks - Lecturette **Time:** 20 minutes

   Pass out Handout 8-1: Placement of Concrete Block Foundation and present the following steps in placing concrete blocks.

   - A bed of mortar is troweled onto the bottom of the ledge excavated for that purpose. The bottom layer of concrete blocks is laid radially and cemented together on the bed of mortar. As the blocks are laid they should be moved sideways a bit to seat them firmly in the mortar bed. They should be placed so that the vertical corners of the blocks on the well side meet and form a solid face. Mortar is troweled into the spaces between the

blocks and between the blocks and the vertical face of the ledge excavation until the spaces are completely full.

- A second layer of blocks is laid radially on a bed of mortar on top of the first layer. To provide strength to the foundation these blocks should be placed so that they come together at the center of the blocks in the first layer. Mortar is not placed between the blocks in the second layer so that rebars from the apron may be inserted between them and then embedded in the concrete when the apron is poured.

- A third layer of blocks is laid end to end on a bed of mortar on the second layer of blocks. This serves as the inner form for the concrete apron and as the support for screeding the top of the apron. Again mortar is not placed between these blocks.

Stop here for questions about placement of the concrete blocks. Go on to discuss the principles of mixing concrete mortar.

- The mortar for use in laying the concrete blocks in the foundation and headwall will be made of 1 part cement and 3 parts clean sand mixed with water to make a workable mix. It should not be soupy. You should be able to pick up a trowel full of the mortar without its running off.

- The cement and sand are measured onto a mixing pad, using a 28 liter measuring box. They are mixed until the color is uniform. Then the mix is piled in a mound and a hole is hollowed out in the center. A small amount of water is poured into the hollow area and the cement-sand mixture is shoveled into the water and mixed with it. More water is added gradually until the mixture is workable. Be careful not to add too much water. If the mixture is too wet, more sand and cement may be added and mixed in thoroughly.

- Provide the following caution: As the mortar requires some time to harden, avoid moving the concrete blocks once they have been placed and mortar has been troweled into the joints.

Tell participants they will not have time to place all three layers today. A work crew will finish this work while they begin the next task.

3. Team Preparation **Time:** 20 minutes

Divide the group into the four construction teams and ask them to review Handout 8-1 and prepare for the fieldwork.

Give teams 15 minutes to prepare for the fieldwork.

Remind the participants that as team members they should

- pay attention to how the work is organized,

- give each other sufficient opportunity to have hands-on practice, and

- take into account the strengths, skills, and learning needs of each team member.

After the team preparations are complete, have all the teams go to one of the field sites for a demonstration on mixing mortar.

4. Mixing Mortar - Demonstration **Time:** 20 minutes

Before the teams begin placing the concrete blocks, the participants should see a demonstration of preparing and mixing cement mortar. (Tell participants that there will be a lecture and further demonstration of making good concrete and the proportions to use for different mixes.) Today participants need to be able to make mortar out of a cement-sand mixture.

Demonstrate proportioning and mixing the mortar using 1 part cement to 3 parts clean sand mixed with water.

After the demonstration, two of the teams should go to the other well site.

5. Fieldwork **Time:** 2-3 hours

The teams place the concrete blocks as described in Handout 8-1. After completion of this fieldwork, the participants should have their mid-day meal and then return to the classroom for the next session.

6. Lessons Learned - Full Group Discussion **Time:** 30 minutes

Ask each team for a brief report. Discuss questions and concerns and ask them to list the most important lessons they learned.

7. Closure: Review this Session and Link to the Next **Time:** 5 minutes

MATERIALS

Handout 8-1: Placement of Concrete Block Foundation

PLACEMENT OF CONCRETE BLOCK FOUNDATION

(Based on a well with a 1.5 m diameter of 1.5 meters)

Step 1: Mix 28 liters of cement with 84 liters of clean sand (proportion 1:3). Add water until the mortar spreads easily with a trowel; it should not be runny or soupy.

Step 2: Sprinkle a light coat of sand on the ledge.

Step 3: Trowel 1 cm of mortar onto the ledge.

Step 4: Lay the first layer (course) of concrete block radially with the inner corners touching.

Step 5: Fill the spaces between the blocks and the space between the blocks and the vertical face of the ledge with mortar.

Step 6: Spread a bed of mortar 1.5 cm deep on top of the first layer of blocks.

Step 7: Place the second layer of blocks as shown in the figure, with the spaces between them over the center of the blocks in the first layer.

Step 8: Do not fill the spaces between the blocks of the second layer with mortar.

Step 9: Spread a bed of mortar 1.5 cm deep on the inner 20 cm of the surface of the second layer of blocks.

Step 10: Place the top layer of blocks as shown. Do not fill spaces between them. If a large gap exists between the blocks when the ring of blocks is closed, then it should be filled with mortar or a small block. A form for making small blocks is shown in Handout 9-3.

Step 11: Clean inner surface of the foundation, cover it, and keep it moist.

MATERIAL FOR ONE WELL

(Based on a well with a diameter of 1.5 meters.)

57 concrete blocks - 15 cm x 20 cm x 40 cm

84 liters of clean sand (2 sacks)

1 sack of cement (additional material should be on hand in case more mortar is needed)

water as required

EQUIPMENT

1 cubic foot measuring box (28 liters)

1 plumb bob with 2 meters of string (a stone tied on the end of a string may be used as a plumb bob)

3 trowels

1 wheelbarrow or head pallet

mixing pad

1 bucket

2 shovels

1 metric measuring tape

PLACEMENT OF CONCRETE BLOCK FOUNDATION

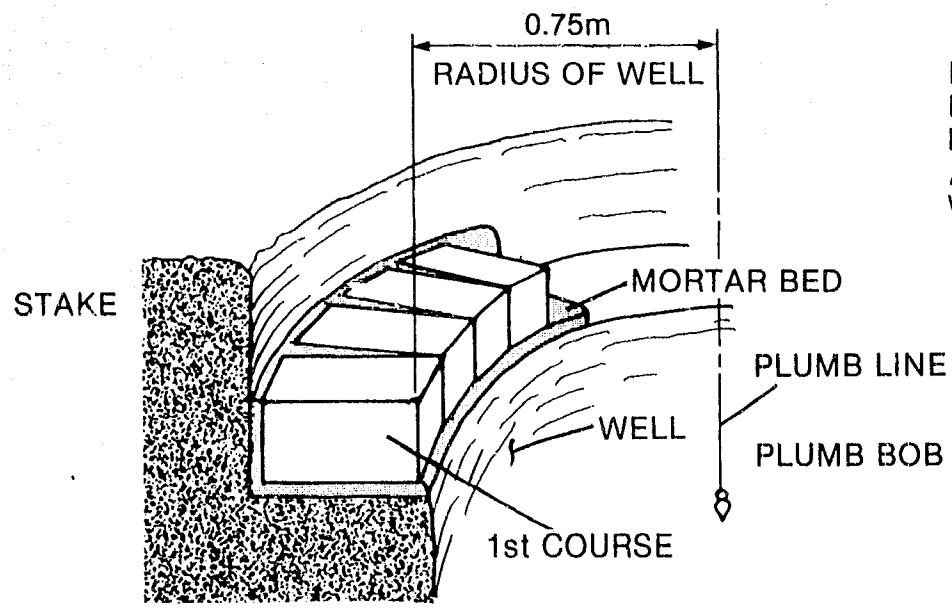

NOTE: USE PLUMB LINE ESTABLISED FOR EXCAVATING THE LEDGE TO POSITION THE CONCRETE BLOCKS IN A CIRCLE AT THE 0.75m RADIUS AND VERTICALLY IN LINE.

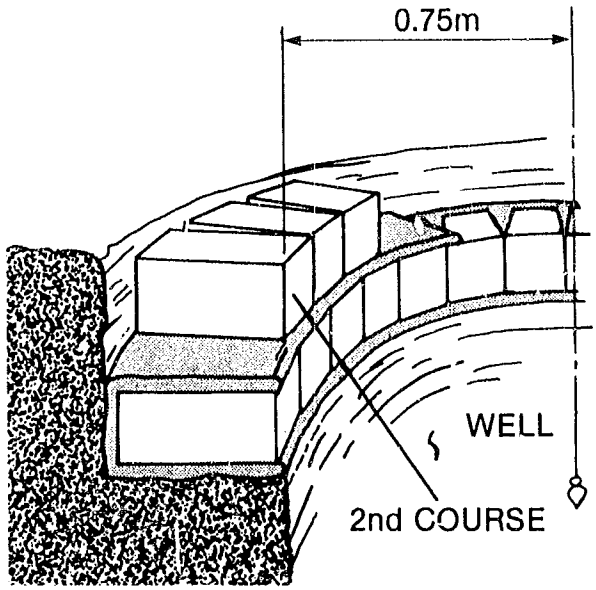

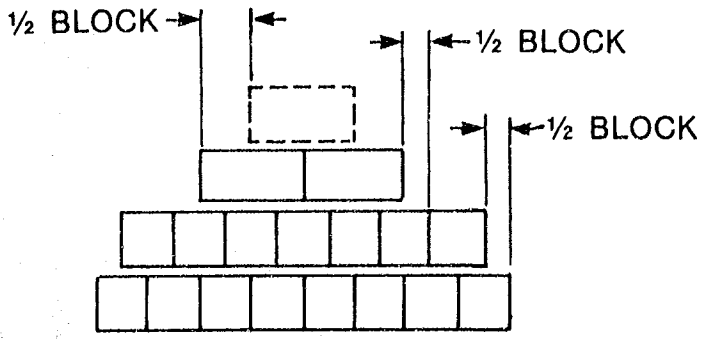

ORIENTATION OF BLOCKS

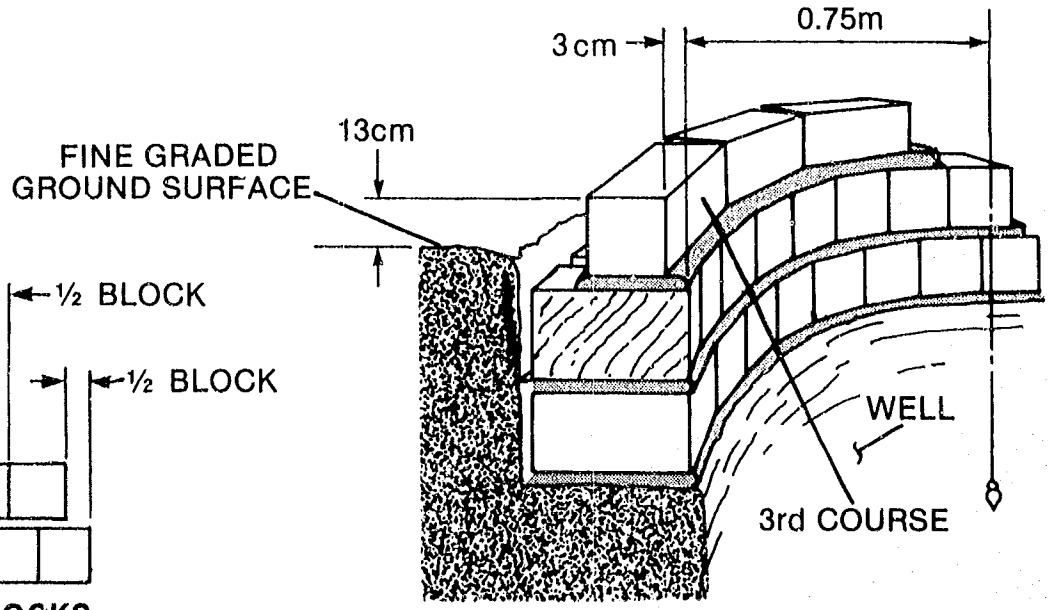

GUIDE TO SESSION 9: MIXING AND POURING CONCRETE BLOCKS

Total Time: 4 hours

SUBJECT	PROCEDURE	TIME	HANDOUTS/MATERIALS	FLIPCHART REQUIRED
Overview	Trainer presentation	5 minutes		
Concrete Blocks	Trainer presentation	20 minutes		
Making Good Concrete	Lecturette	20 minutes	Handout 9-1: Concrete Primer Handout 9-2: Making Concrete and Mortar Mixes	Steps in making concrete
Constructing Forms for Concrete Blocks	Team activity	15 minutes	Handout 9-3: Building Concrete Block Forms and a Measuring Box	
Building Forms	Fieldwork	45 minutes		
Mixing Concrete for Blocks	Demonstration	20 minutes		
Mix and Pour Concrete Blocks	Fieldwork	60 minutes	Handout 9-4: Mixing and Pouring Concrete Blocks	
Clean-Up	Team activity	20 minutes		
Evaluation of the Fieldwork	Discussion	30 minutes		Learnings from fieldwork
Closure	Trainer presentation	5 minutes		

SESSION 9: Mixing and Pouring Concrete Blocks

Total Time: 4 hours

OBJECTIVES

At the end of this session, the participants will be able to

- mix and pour concrete,
- construct forms for concrete blocks, and
- tell what concrete mix is used for concrete blocks.

OVERVIEW

This session provides participants with information and practice in mixing and pouring concrete as well as building forms for constructing concrete blocks. Concrete blocks are the primary materials used to construct both the apron and headwall foundations.

This session combines classroom lectures, discussions, demonstrations, and fieldwork in the same construction teams. Fieldwork is in two parts. First, teams construct all the necessary forms to build concrete blocks and to make a measuring box for the ingredients to mix concrete. Second, participants mix and pour concrete for blocks to use in the headwall.

PLANNING NOTE FOR TRAINERS: Most of the concrete blocks to be used for both the apron and headwall should be pre-made or purchased prior to the workshop because there is not enough time during the workshop for blocks to cure properly and there is no need for participants to spend a lot of time on the repetitive task of block-making. The three or six blocks made during the session will have five days of curing time before being used in the headwall.

PROCEDURES

1. Overview of Objectives and Activities **Time:** 5 minutes

   Give the session goals and an overview of the session.

2. Concrete Blocks **Time:** 20 minutes

   Ask the participants to think of various uses of concrete blocks in water and sanitation construction. Be sure everyone understands that in this project the concrete blocks will be used only for constructing the foundation and the headwall.

   Ask the participants why concrete blocks were selected for this

construction work. Below is a list of reasons they are likely to generate.

- Relatively simple to make.
- Forms easily built and assembled.
- Easily removable forms.
- Construction material relatively low-cost and generally available.
- Can be made ahead of time and stored.
- Can make different sizes to fit need.
- Lumber may be scarce.
- Regular bricks are too small for a foundation.

Tell the participants that, given the curing time needed before the blocks can be used and also the large quantity of blocks required, most of the blocks for the construction were pre-made or purchased for this workshop.

Explain that building the required number of blocks is normally the first step of the construction phase. Here the process is being reversed to accommodate the workshop schedule.

State that today the participants will build two to four concrete blocks which will be used in the headwall. The participants will build the forms and mix and pour concrete.

Remind the participants that the construction teams remain the same.

3. Making Good Concrete - Lecturette **Time:** 20 minutes

In your own words, state that concrete is one of the principal construction materials. It is widely used for footings, foundation walls, basement walls, walls above ground, and floors for all kinds of buildings. It is also used in making improvements on the farm and around the home, such as building cisterns, well platforms, retaining walls, and many other useful structures.

To give maximum service and satisfaction, the concrete must be of good quality. Then it will be strong, durable, and watertight.

This session describes the few simple rules to follow in making good concrete.

Review the steps to follow in making good concrete blocks. (Write them on a flipchart.)

Making good concrete involves:

selecting ingredients,

proportioning,

mixing,

making, shaping, and bracing forms,

reinforcing,

placing concrete in forms,

vibrating,

finishing,

curing

Use Handout 9-1: Concrete Primer and Handout 9-2: Making Concrete and Mortar Mixes to prepare a lecturette about concrete and concrete mixes. Distribute the handouts after the lecturette.

4. Constructing Forms for Concrete Blocks - Fieldwork Preparation **Time:** 15 minutes

Distribute Handout 9-3: Building Concrete Block Forms and a Measuring Box. Tell the participants to divide into their construction teams. Give the teams 15 minutes to read the handout and plan their work. Point out they will also be building a measuring box to use for measuring ingredients for the concrete mix.

5. Building Forms - Fieldwork **Time:** 45 minutes

Have the teams proceed to the field sites and construct and assemble the forms necessary to construct one block and build one measuring box. Your role as a trainer is to circulate among the teams, check progress, ask questions, and act as a resource person.

6. Mixing Concrete for Blocks - Field Demonstration **Time:** 20 minutes

Demonstrate (to the total group or at each site) how to proportion and mix concrete ingredients and pour the concrete into a pre-made form. The demonstration should include

- proportioning,
- mixing,
- pouring,
- vibrating, and
- finishing.

7. Mix and Pour Concrete Blocks - Fieldwork **Time:** 60 minutes

Have the teams mix and pour concrete blocks as described in Handout 9-4: Mixing and Pouring Concrete Blocks. Your role as trainer is to circulate

among the teams to check progress, pose questions, and act as a resource.

Pay special attention to

- proper mixing techniques,
- obtaining a mix of the proper consistency, and
- thorough vibration.

8. Clean-Up **Time:** 20 minutes

Have each team spend 10 to 15 minutes securing and cleaning up the work site and storing the concrete blocks appropriately. After this step, the teams return to the classroom.

9. Evaluation of the Fieldwork - Full Group Discussion **Time:** 30 minutes

Ask the participants the following questions about concrete mixing and pouring:

- What did you find difficult about concrete-mixing and pouring?
- What would you especially want to remember the next time you mix concrete?

Ask the same questions about forming and building concrete blocks.

Talk about (and list on a flipchart) how what has been learned may be useful when the participants return home.

10. Closure - Review this Session and Link to the Next **Time:** 5 minutes

MATERIALS

Handout 9-1: Concrete Primer
Handout 9-2: Making Concrete and Mortar Mixes
Handout 9-3: Building Concrete Block Forms and a Measuring Box
Handout 9-4: Mixing and Pouring Concrete Blocks

CONCRETE PRIMER

A. Selecting Ingredients

- Cement - Portland cement should be a free flowing powder. Make sure it has not gotten wet and hardened in the sack.
- Water - clean. If it is drinkable, then it is probably okay for concrete.
- Sand - uniform. From fine to 6 mm in size. Clean and hard.
- Gravel/crushed stone - Variable from 6 mm in diameter up to a diameter equal to one-fifth the thickness of the slab. Clean and hard.

B. Cleaning Sand and Gravel

If the sand and gravel are not clean, the concrete will not be as strong as if the ingredients are clean. Large stones, sticks, grass and clumps of earth and other debris need to be removed from the sand and gravel. If the sand and gravel are still not adequately clean, they can be washed with water.

C. Proportioning

There are four major ingredients in concrete. These are cement, sand, gravel, (also called aggregate) and water. A common proportion of these materials is 1 part cement to 2 parts sand to 4 parts aggregate. Proportioning can be by weight or volume. In this manual, volume measurements are used.

Note that the strength, durability, and watertightness of concrete are controlled by the amount of water used per sack of cement. In general, the less water used the better the quality of the concrete, so long as the mixture is plastic and workable. Some concrete must be stronger and more watertight than others: less water is used for such concrete. The final decision on the amount of water to be used is determined by the consistency of the concrete when it is mixed.

For normal concrete use a quantity of water equal to approximately 7 gallons (26.5 liters) per 50 kg (110 pound) sack of cement or 6 gallons (22.7 liters) per 94 pound bag.

For damp sand - which feels slightly damp to the touch, use 25.6 liters of water per sack of cement.

For wet sand - which feels wet and leaves a little moisture on the hands, use 23 liters of water per sack of cement.

For very wet sand - which is sand that leaves the hand wet and glistens or sparkles when picked up, use 20 liters of water per sack of cement.

D. Mixing by Hand

On most self-help projects, the amount of concrete needed is small and does not justify using a mechanical mixer. In any case a mechanical mixer may not be available or if it is, it will be expensive. If a few precautions are taken, hand-mixed concrete can be as strong as concrete mixed in a machine.

The first requirement for mixing by hand is a mixing area which is both clean and watertight. This can be a wood and metal mixing trough or a simple concrete floor (called a "pad").

Use the following procedures, being careful to measure all materials:

1. Spread the sand evenly over the mixing area.

2. Spread the cement evenly over the sand and mix these materials by turning them with a shovel until the color is uniform.

3. Spread this mixture out evenly, spread the gravel on it, and mix thoroughly.

4. Make a mound of the material in the center of the mixing pad, make a depression in the mound and pour the water into the depression, slowly and thoroughly mixing the material into the water with a shovel. Mix water and sand/cement/gravel mixture together twice to make sure it is thoroughly combined.

A workable mixture should be smooth and plastic, neither so wet that it runs nor so stiff that it crumbles. If it is too wet, add small amounts of sand and gravel, in the proper proportion until it is workable. If a concrete mixture is too stiff, it will be difficult to place in the forms. If it is not stiff enough, it means that too much water has been added and the concrete will be weaker than intended.

When the work for the day is finished, be sure to rinse the concrete from the mixing area and the tools to keep them from rusting and to prevent the concrete from caking on them. Smooth, shiny tools and mixing surfaces make mixing much easier. The tools will also last much longer.

E. Forming

A form is a mold into which the concrete is placed. The inside surface of the form should be sealed to prevent the concrete from sticking. This can be done by coating the inside with used motor oil. This also adds to the life of the form and makes it easier to remove.

Stakes should be driven around the sides of the forms to secure them so they will not move when the concrete is being poured.

F. Placing Concrete in Forms

To make strong concrete structures it is important to place the concrete in the forms correctly.

The wet concrete mix should not be handled roughly when it is being carried and put in the forms. It is very easy, through jogging or throwing, to separate the fine from the coarse gravel. Do not let the concrete drop freely for a distance greater than 90 to 120 cm (3 to 4 feet). Concrete is strongest when the various sizes of gravel and cement paste are well mixed.

Concrete which is too stiff is difficult to work into place in the form. Concrete that flows out when placed in a form is too wet and therefore weak.

As the concrete is being placed, it should be vibrated so there are no air holes to leave weak spots in the concrete. This can be done by agitating the concrete with some long thin tools. Agitating and vibrating can be done with a thin (2 cm) iron rod, a wooden pole, or a shovel.

Special attention must be paid to assure that the areas near the sides of the form are completely filled with concrete. If the forms are strong enough, they can be struck with a hammer on the outside to vibrate the concrete just enough to allow it to settle completely in the forms. Too much vibration, however, can force most of the large aggregate toward the bottom, thus reducing the overall strength of the concrete.

G. Reinforcement

Concrete is reinforced with various materials, usually steel rods called rebars. Steel rebars should be tied together with wire where they cross. Also common is steel wire mesh. Less commonly used and less effective is bamboo. If bamboo is used it should be completely dry (cured). The ends should be sealed to reduce water uptake. It should be split and used skin side down.

H. Finishing

Once the concrete is poured into the forms, its surface should be worked to an even finish. The smoothness of the finish depends on what the surface will be used for. If more concrete or mortar will later be placed on it, the surface should be left relatively rough to aid in bonding. If the surface will later be walked on, as for example the apron or the cover of a well on which a pump will be mounted, it should be somewhat rough to prevent people from slipping when it is wet.

A somewhat rough texture can be achieved by finishing with a wooden float or by lightly brushing the surface to give it a texture. A very smooth finish can be made with a metal trowel. Over-finishing (repeated finishing) can lead to powdering and erosion of the surface.

I. Curing Concrete

After the forms have been filled, the concrete must be cured until it reaches the required strength. The concrete must be kept moist during curing so that the chemical reaction that causes it to harden will continue for as long as is necessary to achieve the desired strength. The early stage of curing is extremely critical. Once the concrete is allowed to dry, the chemical hardening action will gradually taper off and cease. It cannot be re-wetted to re-start the hardening process.

The concrete can be kept moist by covering the exposed surfaces with canvas, empty cement bags, burlap, plastic, palm leaves, straws, and wet sand. The covering must also be kept wet so that it will not absorb water from the concrete. Covering is usually easier than continuously sprinkling or frequently dousing the concrete with water, another way to keep it moist.

MAKING CONCRETE AND MORTAR MIXES

Three different concrete and mortar mixtures will be used during this workshop. Mixtures are generally specified by the number of parts of cement to sand and to gravel (if gravel is to be used). For example a 1:2:4 mixture is made up of 1 part cement, 2 parts sand, and 4 parts gravel. The proportion of cement to the other ingredients is one of the factors which determines the strength of the hardened concrete. More cement tends to make the concrete stronger, thus, the mixture depends on the purpose for which the concrete is to be used.

There are two other variables in a concrete mix, namely, the size of the gravel (also called aggregate) and the amount of water used in making the mix. The size of the gravel depends on the thickness of the structure for which the concrete is to be used. Comparatively large rocks may be used for a massive structure such as a concrete dam. Fine gravel no larger than 1 inch in diameter should be used for thin slabs and walls.

The proposed use of the concrete also determines the amount of water which may be used. For massive structures and thin walls, a soft, plastic concrete mix is used for ease of placing (pouring). Also, with a soft mix, it is easier to make sure that the concrete fills the forms without leaving holes. However, the wetter the concrete is the weaker it will be, so the amount of water must be controlled carefully. Cement mortar should be stiff enough so that it will stay on a trowel as it is moved into place and so that it will not run out of vertical spaces between the ends and sides of adjacent concrete blocks.

For this workshop, the following concrete and mortar mixtures will be used:

1. For concrete blocks: 1:4 (no gravel), with water enough to make a mix that will fill all of the corners in the concrete block form when vibrated with a paddle. It should not be soupy or runny.

2. For the concrete apron: 1:2:4, with about the same proportion of water as used in No. 1 above. The gravel may be up to 2.5 cm in diameter.

3. For the cement mortar that is used in the joints between the concrete blocks in the foundation and in the headwall, 1:3 (no gravel). In this mixture, the proportion of water is very critical. The mortar must be stiff enough to stay on a trowel and to stay in vertical spaces between the concrete blocks.

It is important to measure the ingredients accurately for the mixtures listed above. A measuring box will be made which will hold exactly one cubic foot.

BUILDING CONCRETE BLOCK FORMS AND A MEASURING BOX

STEPS FOR ASSEMBLING THE FORMS

1. Cut the required pieces of wood for constructing the form (see Figure 1).

2. Assemble the concrete block form.

   a. Nail the baseboard and frame together.

   b. Assemble the upper frame.

   c. Nail the support blocks on the two side form boards 3 cm from the top of the form.

   d. Place the baseboard and frame on a flat surface near the concrete mixing pad.

   e. Stand the two side forms on the baseboard against the two outer strips.

   f. Wedge the two end forms between the two side forms to make a box. If the side boards do not wedge tightly, caulk along the edges with old rags, making sure that no rags protrude into the inside of the form where the concrete is to be poured.

   g. To hold the side and end forms together, place the upper frame on the assembled concrete block form so that it rests on the support blocks.

   h. Paint the inside surface of the box with used engine oil to keep the concrete from sticking to the wooden form.

   Note: Figure 2 shows how to construct a form for fabricating a small or half-sized concrete block.

STEPS FOR ASSEMBLING THE MEASURING BOX

Follow the instructions in Figure 3.

MATERIAL

For one concrete block form.

Baseboard and frame:

Pieces of wood cut to the following dimensions:

1 piece - 2 cm x 29 cm x 54 cm (baseboard)
4 pieces - 2 cm x 5 cm x 34 cm
2 pieces - 2 cm x 5 cm x 44 cm
2 pieces - 2 cm x 5 cm x 54 cm

Side and end forms:

Pieces of wood cut to the following dimensions:

2 pieces - 2 cm x 15 cm x 44 cm
2 pieces - 2 cm x 15 cm x 20 cm
4 pieces - 2 cm x 5 cm x 5 cm

nails
used engine oil

Note: Finished lumber 2.5 cm thick which is planed both sides will result in a board 2.0 cm thick.

For one 28 liter (1 cubic foot) measuring box with carrying rails.

Pieces of wood cut to the following dimensions:

2 pieces - 2 cm x 30 cm x 30 cm
2 pieces - 2 cm x 34 cm x 34 cm
1 piece - 2 cm x 34 cm x 34 cm
2 pieces - 2 cm x 10 cm x 84 cm

used engine oil
nails

Figure 1

FORMS FOR MAKING CONCRETE BLOCKS

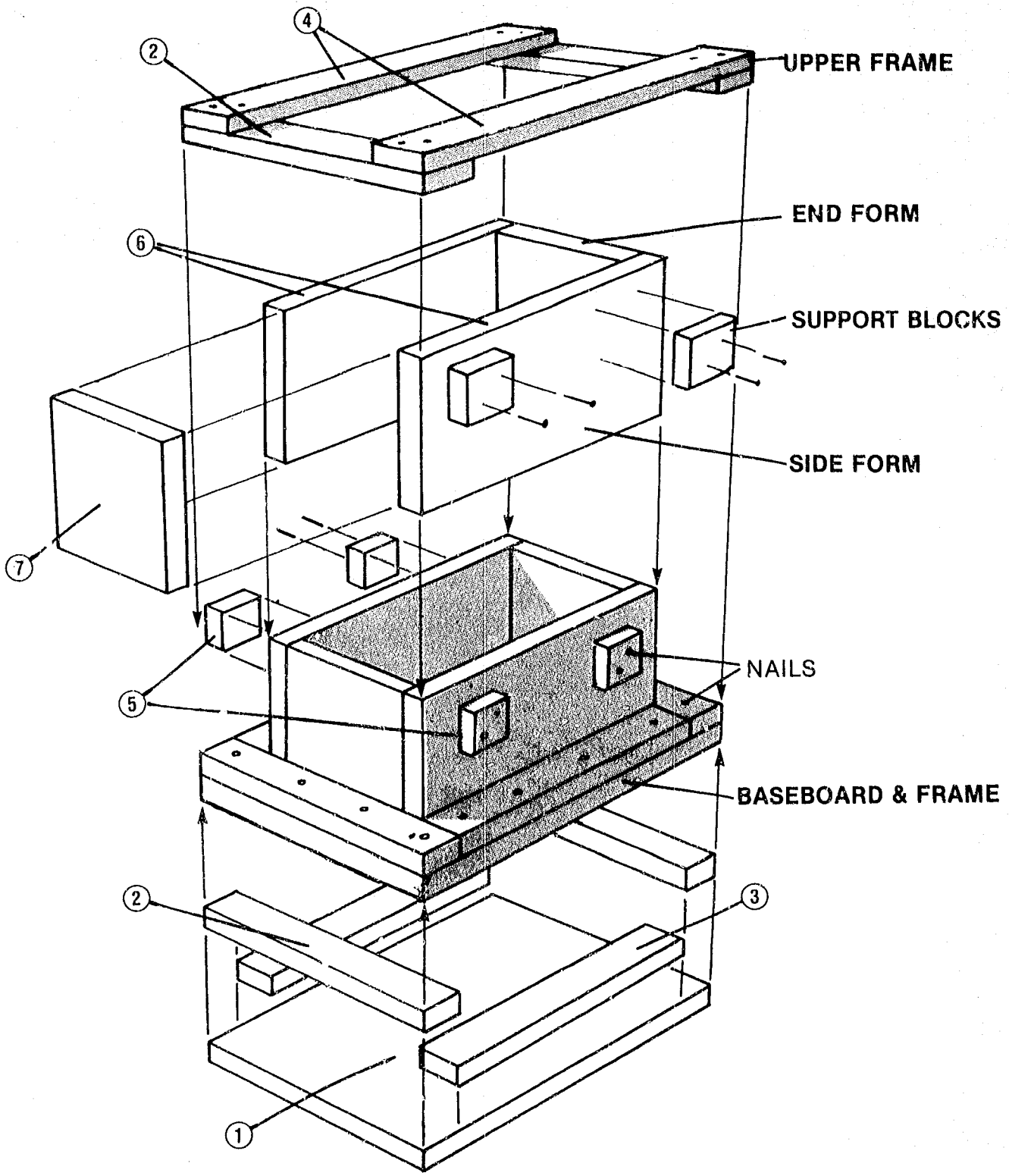

1 - BASE BOARD 2cm x 34cm x54cm (1 pc)
2 - FRAME 2cm x 5cm x 34cm (4 pcs)
3 - FRAME 2cm x 5cm x 44cm (2 pcs)
4 - FRAME 2cm x 5cm x 54cm (2 pcs)
5 - SUPPORT BLOCKS 2cm x 5cm x 5cm (4 pcs)
6 - SIDE FORMS 2cm x 15cm x 44cm (2 pcs)
7 - END FORMS 2cm x 15cm x 20cm (2 pcs)

BASED ON CONCRETE BLOCK OF 15cm x 20cm x 40cm

Figure 2

MODIFIED FORM FOR FABRICATING PARTIAL CONCRETE BLOCK

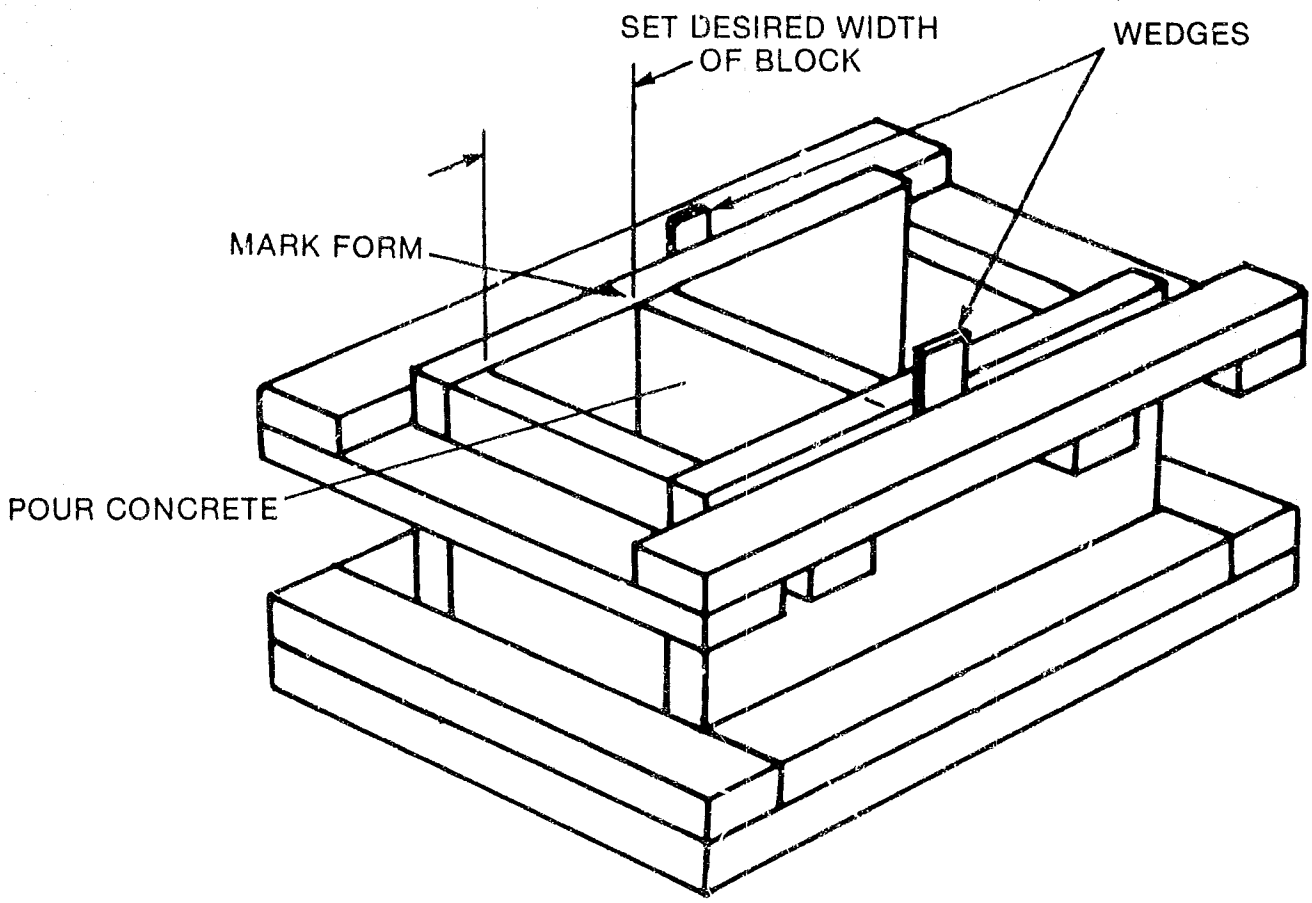

Figure 3

STEPS FOR BUILDING A ONE CUBIC FOOT MEASURING BOX

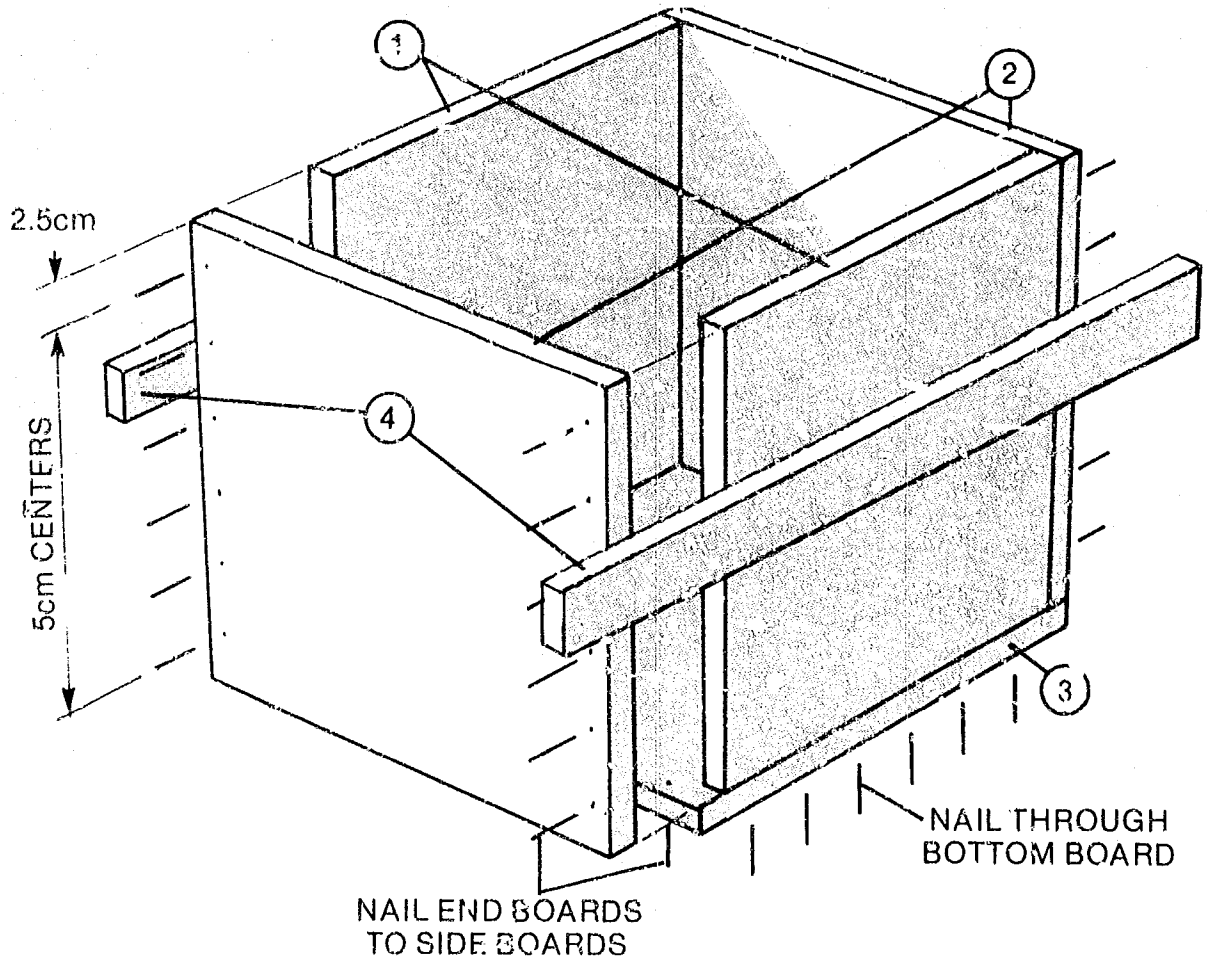

1. MATERIALS TO MAKE A 28 LITER (1 CUBIC FOOT) MEASURING BOX:

REF. DWG.	
1	2cm x 30cm x 30cm (2 pcs)
2	2cm x 34cm x 30cm (2 pcs)
3	2cm x 34cm x 34cm (1 pc)
4	2cm x 10cm x 84cm (2 pcs)
AS REQ'D	USED ENGINE OIL
	NAILS - 5cm × 6d BOX

2. PROCEDURE
   1. CUT LUMBER AS SHOWN IN ABOVE LIST.
   2. NAIL BOTTOM TO SIDES
   3. NAIL SIDES TOGETHER
   4. PAINT INSIDE WITH LIGHT COAT OF USED ENGINE OIL.

MIXING AND POURING CONCRETE BLOCKS

1. To pour the concrete block, follow these steps:

   a. Mix the concrete, using 4 parts of sand and 1 part of cement and adding only enough water to make a stiff mix.

   b. The preferred sand for concrete is sharp quartz river sand, because of its strength. It should be clean, free of dirt and rubbish. The water used should also be clean and free of debris and mud.

   c. Mix the concrete on a flat, hard, clean surface.

   d. Spread the sand on the mixing surface first, then add the cement on top.

   e. Mix the sand and cement with flat blade shovels until the mixture is a uniform color.

   f. Pile the sand-cement mix into a mound and make a bowl-like depression in its center.

   g. Pour a small amount of water into the depression and shovel the mix into it, gradually adding more water and shoveling the mix into it until the mixture is the right consistency -- in this case, stiff.

   h. It is important not to add too much water at a time, as the mix should be quite dry, not soupy and runny. If the mix is too wet, add a small amount of the sand-cement mixture to absorb the extra water.

   i. Place the concrete in the form and vibrate it by agitating it with a flat stick so that it fills the form completely.

   j. When the form is full, scrape off the top with a flat board to leave a rough surface.

   k. After two days remove the forms. The blocks should be kept moist for at least three days before being moved to the construction site.

2. To remove the concrete form, follow these steps:

   CAUTION: The concrete block has not reached its full strength by the end of two days, so it should be handled carefully to avoid breaking it or chipping off the corners.

   a. Lift the upper frame off the form.

b. Work the side forms away from the concrete block by pulling them up off the baseboard and frame.

c. Remove the end forms.

d. Take the concrete block off the baseboard and set it aside on a clean, hard surface until it is ready to be used.

e. If possible, store the concrete blocks in a shady place. Keep them covered with moistened empty cement sacks or grass for a week, either in the storage area or when actually laid in place.

MATERIAL FOR 4 BLOCKS OF 1:4 PROPORTION

paddle (for vibrating concrete)
10 liters (1/3 sack) of cement
40 liters (1-1/3 sacks) of clean sand
clean water

EQUIPMENT FOR MAKING CONCRETE BLOCKS FOR EACH WELL

2 flat blade shovels
2 buckets for carrying water
1 wheelbarrow or head pallet
2 hammers
1 paint brush for applying used engine oil

GUIDE TO SESSION 10: APRON AND HEADWALL DESIGNS

Total Time: 2 hours

SUBJECT	PROCEDURE	TIME	HANDOUTS/MATERIALS	FLIPCHART REQUIRED
Overview	Trainer presentation	5 minutes		
Apron	Group discussion	10 minutes		Notes of discussion
Types of Aprons	Lecturette	20 minutes		
Headwall	Lecturette	30 minutes		
Water Lifting Devices	Discussion	40 minutes	Handout 10-1: Water Lifting Devices	
Summary of Learnings	Trainer presentation	10 minutes		
Closure	Trainer presentation	5 minutes		

SESSION 10: Apron and Headwall Designs

Total Time: 2 hours

OBJECTIVES

By the end of this session, the participants will be able to

- describe the purposes of a headwall and an apron for an open dug well,
- select appropriate types of headwalls and aprons based on need, available resources, and cost factors,
- describe the type of headwall and apron to be constructed during the field project, and
- design an appropriate water lifting device.

OVERVIEW

This session introduces the participants to the purposes of headwalls and aprons and to the construction methods and materials which can be used to build them. The advantages and drawbacks of each method are reviewed and the factors to consider in selecting the most appropriate method are discussed. The specific construction methods to be used in the fieldwork are described. The session also introduces appropriate water lifting devices.

PLANNING NOTE FOR TRAINERS: The type of water lifting device most appropriate for the wells the participants will be improving should have been selected prior to the workshop. In this session provide sketches and an explanation of the type of water lifting device to be installed. A sketch could be reproduced and distributed to the participants as Handout 10-2.

PROCEDURES

1. Overview of Objectives and Activities — **Time:** 5 minutes

   Share the objectives of the session and provide an overview. State that it is important for the participants to understand the range of construction methods for constructing an apron or headwall even though they will become familiar with only one of them during the fieldwork.

2. Aprons - Group Discussion — **Time:** 10 minutes

   Make sure the participants understand what an apron is. Define an apron as a slab (usually concrete) covering the area surrounding a well.

Ask the participants to brainstorm on the purposes served by a well-constructed apron. Record their responses on a flipchart.

Be sure the list includes the following purposes:

- To drain spilled water and rainwater away from the well.
- To provide a place for users to stand and set their buckets.
- To help prevent the well water from being contaminated by surface water or animal and human debris.

3. Types of Aprons - Lecturette **Time:** 20 minutes

Present the following information in your own words.

Aprons are usually circular but they can be square. Circular ones are more functional and economical, but square or multi-sided ones are sometimes easier to build. The ideal width of an apron is two meters, but it must be at least one meter.

The most effective construction material is reinforced concrete, but masonry or brick may also be used.

The following advantages and drawbacks should be considered when deciding on the size and shape of the apron and selecting the construction materials.

- Reinforced concrete is the preferred material because it is
  - smooth and mostly crack-free,
  - strong,
  - very durable, and
  - impermeable.

  Reinforced concrete should be used if sand and gravel are available and cement is relatively inexpensive.

- If cement is in short supply and/or expensive, masonry should be considered for the apron. Because masonry requires only small amounts of cement to bond the stones together, it is relatively inexpensive if large stones are available. The advantages of masonry are that it is
  - not likely to crack and
  - reasonably impermeable.

  The drawbacks are that the surface will not be smooth and may have pockets or indentations in which pools of water can stagnate.

- Bricks are the least preferred option as they are

  - difficult to position for a smooth surface,
  - prone to cracks and water leakage, and
  - not very durable.

  Bricks for this purpose must be kiln fired, not adobe.

4. Headwalls - Lecturette **Time:** 30 minutes

Define a headwall as a structure built (on a foundation or on solid ground) all the way around a well and rising approximately one meter above the apron. Find out from the participants if there are other local terms used for a headwall.

Ask participants to identify the purposes of a headwall. Record their responses on a flipchart. Make sure the list includes the following purposes:

- To prevent dirt and filth from falling into the well.
- To prevent surface water from running into the well.
- To keep people and animals from falling into the well.
- To make it easier to draw water from the well.

State that headwalls can be constructed of many materials, i.e.,

- poured concrete,
- brick,
- concrete blocks (to be used in the fieldwork),
- masonry, and
- wood.

Discuss the advantages and disadvantages of each material and the factors to consider in selecting which material to use. The advantages and disadvantages are similar to information presented about aprons.

Explain why in this workshop concrete blocks were chosen as the construction material for both the headwall and the apron:

- They can be fabricated using homemade forms from readily available materials.
- Building with them is not complicated.
- They provide strong support.
- They can easily be laid to form a strong, circular structure.
- They can be fabricated in advance so that the construction project can be completed during the workshop time.

Refer to the drawings in Handout 2-1 of the headwall and apron to be constructed and discuss their main features.

5. Water Lifting Devices - Discussion **Time:** 40 minutes

Introduce the topic of water lifting devices. Ask the participants what problems arise when individual well users use their own buckets and ropes to draw water from the well. Be sure the following problems are mentioned:

- Individuals often do not use a clean rope.
- The rope is often dragged through the mud.
- There is no sanitary place to set the bucket down before or after drawing water.

Once again, remind the participants that a handpump is the only totally sanitary method of drawing water, but short of this there are several simple improvements which can be made to improve the conditions for drawing water.

Ask participants what types of low-cost water lifting devices they have seen effectively used.

Distribute Handout 10-1: Water Lifting Devices and talk about how these methods keep the rope off the ground. Other simple improvements include putting up a post for hanging buckets to keep users from putting buckets on the ground where they can get dirty or spilling water around the area.

Ask participants if they have other suggestions for simple improvements.

Introduce and discuss the type of water lifting device to be used in the field construction project. Describe why this type was selected and how it functions.

Tell the participants that they will be responsible for the construction and installation of the water lifting devices before the workshop is ended. Community involvement is important at this stage to make sure the water lifting device will be acceptable to the users.

6. Summary of Learnings **Time:** 10 minutes

Review the major purposes of aprons, headwalls, and water lifting devices. Ask participants to tell what types of aprons and headwalls they will most likely use back home.

7. Closure: Review this Session and Link to the Next **Time:** 5 minutes

MATERIALS

Handout 10-1: Water Lifting Devices

WATER LIFTING DEVICES

SIMPLE PIPE DEVICE FOR DRAWING WATER

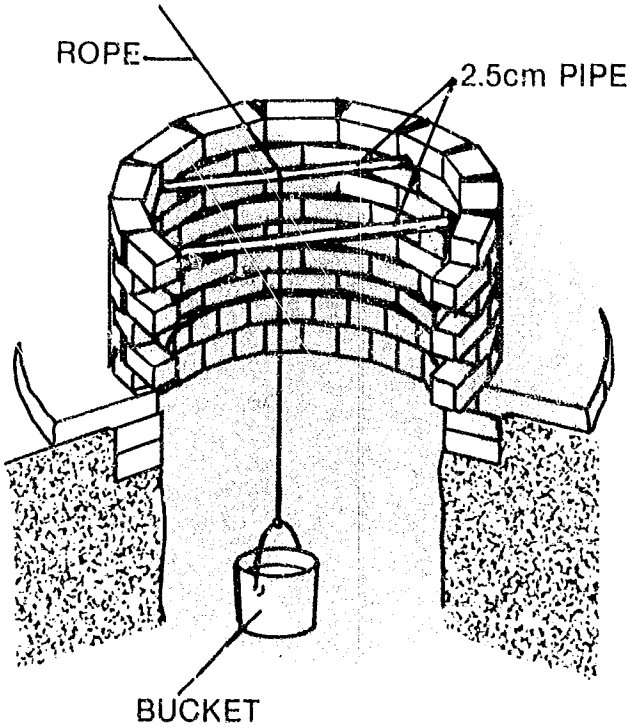

SIMPLE PULLEY DEVICE FOR DRAWING WATER

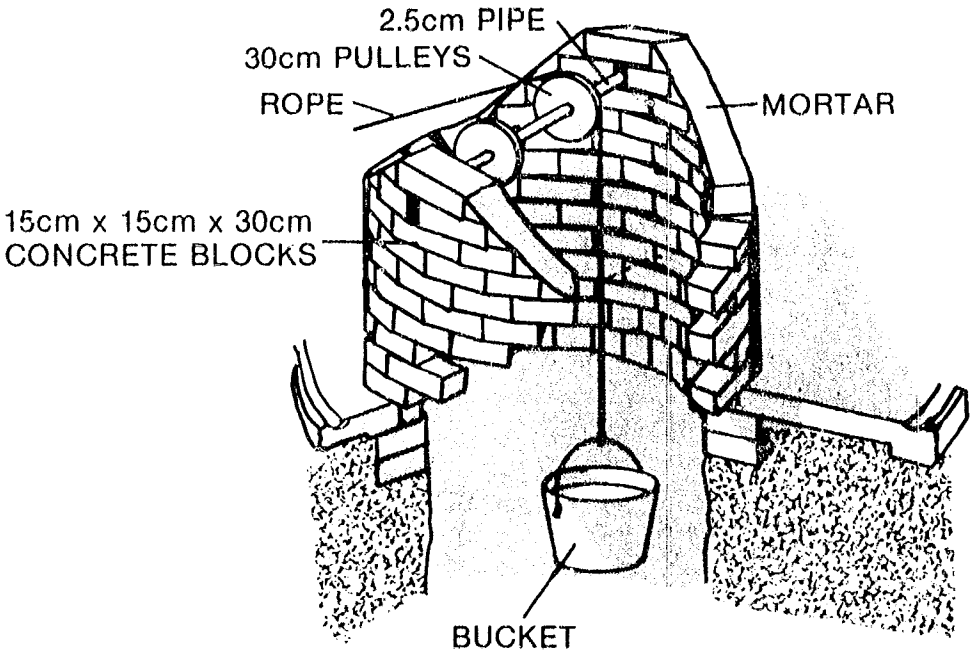

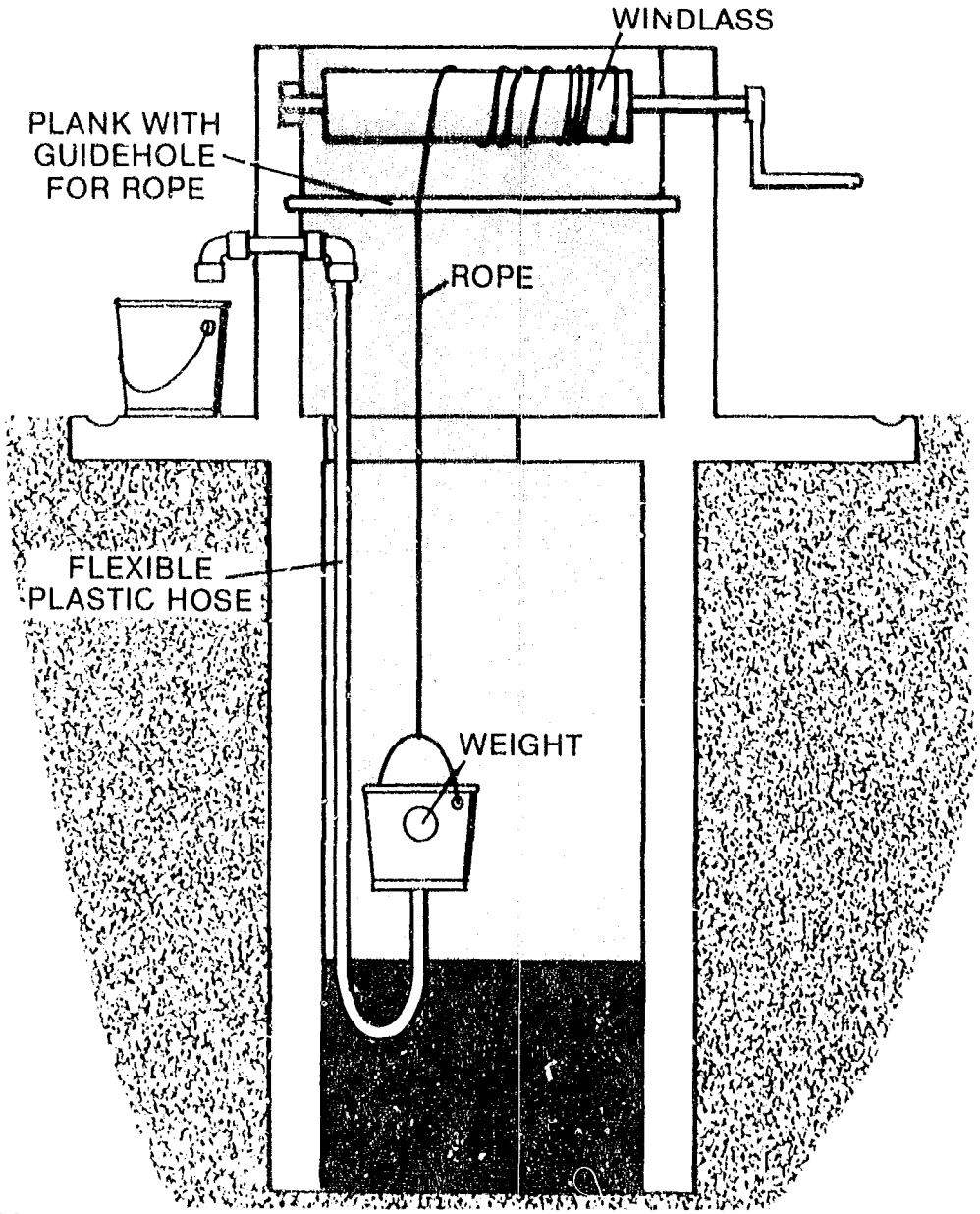

WATER LIFTING DEVICE AND WELL PROTECTION

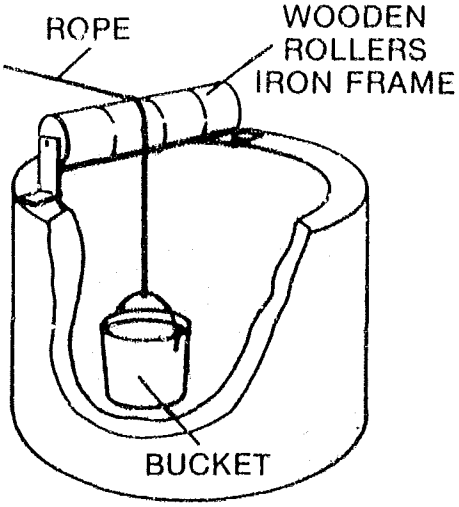

ROLLER TYPE

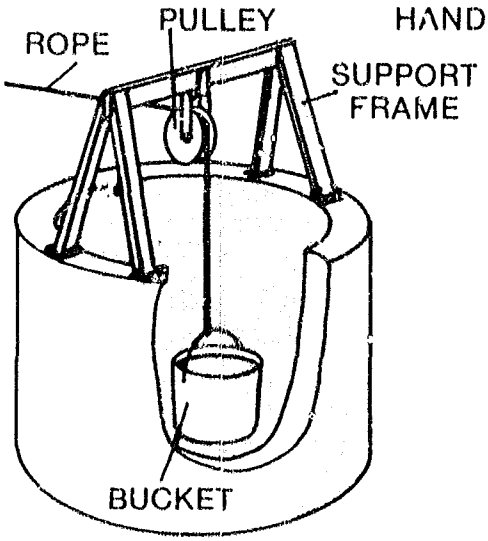

PULLEY TYPE

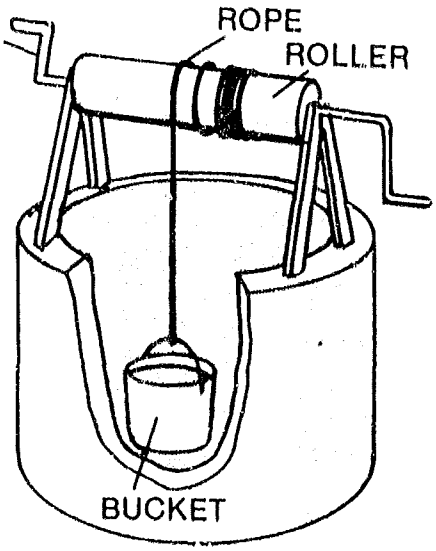

WINDLASS TYPE

GUIDE TO SESSION 11: PREPARATION FOR THE APRON POUR

Total Time: 6 hours

SUBJECT	PROCEDURE	TIME	HANDOUTS/MATERIALS	FLIPCHART REQUIRED
Session Overview	Trainer presentation	5 minutes		
Apron Preparation	Lecturette	50 minutes	Handout 11-1: Construction Steps--Preparation for Apron Pour	
Preparation for Fieldwork	Team activity	20 minutes		
Fieldwork	Team activity	4 hours		
Evaluation of Fieldwork	Small group discussion	30 minutes		
Application	Individual activity	10 minutes		
Closure	Trainer presentation	5 minutes		

SESSION 11: Preparation for Apron Pour

Total Time: 6 hours

OBJECTIVES

At the end of this session, the participants will be able to:

- describe the major tasks to be completed prior to pouring a concrete apron,
- install screed supports (apron forms),
- slope the ground evenly in the apron area, and
- build and install rebars for the apron.

OVERVIEW

Preparation for the mixing and pouring of a concrete apron is a major construction step. In this session, the participants spend most of the day in the field preparing for the apron pour to be done the following day.

The preparation work during this session involves

- preparing the the apron area so that it slopes evenly,
- constructing the screed supports which also serve as the outer form for the concrete apron pour, and
- preparing and installing the rebar.

PLANNING NOTE FOR TRAINERS: Work crews should have completed laying the concrete block foundation begun by participants in Session 8 so that the apron can be poured.

PROCEDURES

1. Session Overview of Objectives and Activities **Time:** 5 minutes

   Provide overview and present session objectives.

2. Apron Preparation - Lecturette **Time:** 50 minutes

   Tell the participants that today they will prepare the apron area for the pouring of the apron, which will be done tomorrow. Remind them that the area must be thoroughly and completely prepared and the rebars necessary to strengthen the apron concrete must be installed. Proper preparation is critical to a successful apron pour.

Go over the following information about preparing for the apron pour.

- Where the concrete is to be poured for the apron the ground must be comparatively smooth and even. The area should be free of bushes, grass, mud, and standing water. There should be no channels which allow surface water to seep under the apron and penetrate the well. (Most of this work should have already been done at the construction site by the work crew.)

- The screed supports, which will also serve as the forms for the outer edge of the apron, will be constructed. The top edge of the screed supports will slope as the apron slopes.

c. The area of the apron should be excavated to a depth of 13 cm. The ground surface should slope as the apron will slope so that the apron slab will be 13 cm thick from one side to the other.

- A channel about 23 cm wide and 2.5 cm below the graded ground surface will be dug at the circumference of the apron so that the outer edge will be thicker and stronger.

- In addition to preparing the ground surface for the apron pour, it is necessary to prepare the rebars for the pour. Concrete is strong in compression, but considerably weaker in tension. Thin slabs have a tendency to crack if not reinforced.

Pass out Handout 11-1: Construction Steps--Preparation for Apron Pour and ask participants to read it. Go over the key points in the handout.

3. Preparation for Fieldwork **Time:** 20 minutes

Give construction teams 20 minutes to organize for work and team responsibilities, and check materials and supplies.

The construction teams will continue to work on the same wells.

This will probably be a good breaking point for lunch. However, if time remains before lunch and the field site is not too far away, participants could begin their fieldwork.

4. Fieldwork **Time:** 4 hours

Direct the participants to proceed to the field sites and do the fieldwork as described in Handout 11-1.

They should return to the classroom for a discussion of the the fieldwork.

5. Evaluation of Fieldwork - Small Group Discussion **Time:** 30 minutes

Divide the group into the construction teams to discuss what they learned about

- preparing the ground surface,

- constructing the screed supports,
- excavating and constructing the outer edge of the apron,
- preparing and installing the rebar, and
- working as a team.

Reassemble the participants and lead them in a discussion about the fieldwork, eliciting comments from each team on any surprises, unanticipated problems, creative solutions, and learnings from the day.

6. Application - Individual Work **Time:** 10 minutes

Tell participants to write down in their notebooks three things they learned today which they can use back home. Tell them to be specific about how they will use these learnings.

7. Closure: Review of this Session and Link to the Next **Time:** 5 minutes

MATERIALS

Handout 11-1: Construction Steps--Preparation for Apron Pour

CONSTRUCTION STEPS
Preparation for Apron Pour

1. Make sure the apron area is cleaned of all vegetation, mud, and stone and is graded appropriately.

2. Check the location and leveling marks of the four outer support stakes (5, 6, 7, 8) set in Session 8. Make sure they are still 2.20 meters from the center of the well and that all of the level marks are about 13 cm above the rough ground grade and even with the top of the concrete blocks of the foundation.

3. Install additional stakes at the points shown in Figure 1 (i.e., stakes 6b, 7a, 7b, 8a, etc.). These will also support the screed support boards. The inside edge of each of these stakes is to be located 2.20 meters from the center of the well. The distance between the stakes should equal the length of the screed support boards. Determine the length of these boards from the chart on Figure 1. Since the apron has twelve sides, then each screed support will measure 1.14 meters (radius x 0.51764 or 2.20 x 0.51764 = 1.14 meters).

4. After placing all of the stakes, put a leveling mark (from stakes 5, 6, 7, 8) on each one as shown in Figure 2.

5. Then mark screed support elevations <u>from leveling marks</u> on each stake, as follows (see the chart in Figure 2):

Stake #5	25.4 mm below leveling mark
Stakes #5(a) & 7(b)	15.2 mm below leveling mark
Stakes #6(a) & 8(b)	5.0 mm below leveling mark
Stakes #6 & 8	at leveling mark
Stakes #6(b) & 8(a)	5.0 mm above leveling mark
Stakes #7(a) & 7(b)	15.2 mm above leveling mark
Stake #7	25.4 mm above leveling mark

Note: These elevations are the same for all wells regardless of diameter.

6. Nail the screed support boards to the stakes at the elevations marked in step 5. The top of the support boards should be even with the elevation mark. Cut stakes off so they are even with the screed supports. Put in additional stakes or place dirt behind the support boards to add support during the apron pour.

7. Use a 2.5 cm x 5 cm x 13 cm stick to measure the distance between the bottom of the screed and the ground to determine the elevation of the graded ground surface.

8. Fine grade the apron area using the 13 cm long stick to establish the correct elevation (this and the next two tasks will be divided up between teams). When finished, the entire area should be sloping, and should

allow for a constant apron thickness of 13 cm when the apron is poured to the top of the support boards.

9. While fine grading, dig the 2.5 cm x 23 cm channel.

Rebar Installation

10. Cut the rebar into pieces 6 meters long, bend them, and tie them into a circle 2.0 meters in diameter.

11. Cut the rebar into pieces 6 meters long, bend them, and tie them into a circle 3.8 meters in diameter.

12. Place the two rebar circles on the apron area and support them on rocks as shown in Figure 1.

13. Place radial rebars so that their ends fit between the concrete blocks in the top layer. Tie them to the rebar circles at each junction.

14. Place 25 cm lengths of rebar so that their ends fit between the small rebar circle and the joints between the second layer of blocks. Tie these pieces to the inner circle at each junction.

Screed Centering

15. A screed is used to ensure that the apron surface is smoothed and even with the top edge of the screed support boards and drains in the right direction. In addition, the drainage channel around the apron can be formed by a U-shaped piece of wood attached to the screed. To ensure that the channel is dug at a constant radius from the well center, a screed centering device is constructed and placed in the well.

16. The details for construction of the screed centering device and its placement are shown in Figures 2 and 3.

MATERIAL FOR ONE WELL

Pieces of wood cut to the following dimension:

2 pieces - 2.5 cm x 5 cm x 13 cm (sticks for measuring)

8 pieces - 5 cm x 5 cm x 75 cm (stakes for screed supports)

12 pieces - 2.5 cm x 5 cm x 150 cm (screed supports) (to be cut to fit in field)

4 pieces - 5 cm x 10 cm x 150 cm (screeds)

nails

4 sacks of cement

dirt (free of rubbish and grass)

water

38 meters of 10 mm rebar

10 meters of tie-wire

EQUIPMENT FOR ONE WELL

3 buckets

2 hammers

2 carpenter's levels, at least 1 meter long or a 1.5 meter hose, transparent if available

2 round blade shovels

2 flat blade shovels

2 crowbars (for prying out large rocks)

1 mixing pad

1 measuring box (1 cubic foot capacity) (made during workshop)

2 rakes

2 pairs of pliers for tying tie-wire

1 bar cutter or hacksaw for cutting rebars

2 wire cutters for cutting tie wire

1 metric tape measure

Figure 1

PLAN VIEW OF SCREED SUPPORTS AND REBAR PLACEMENT

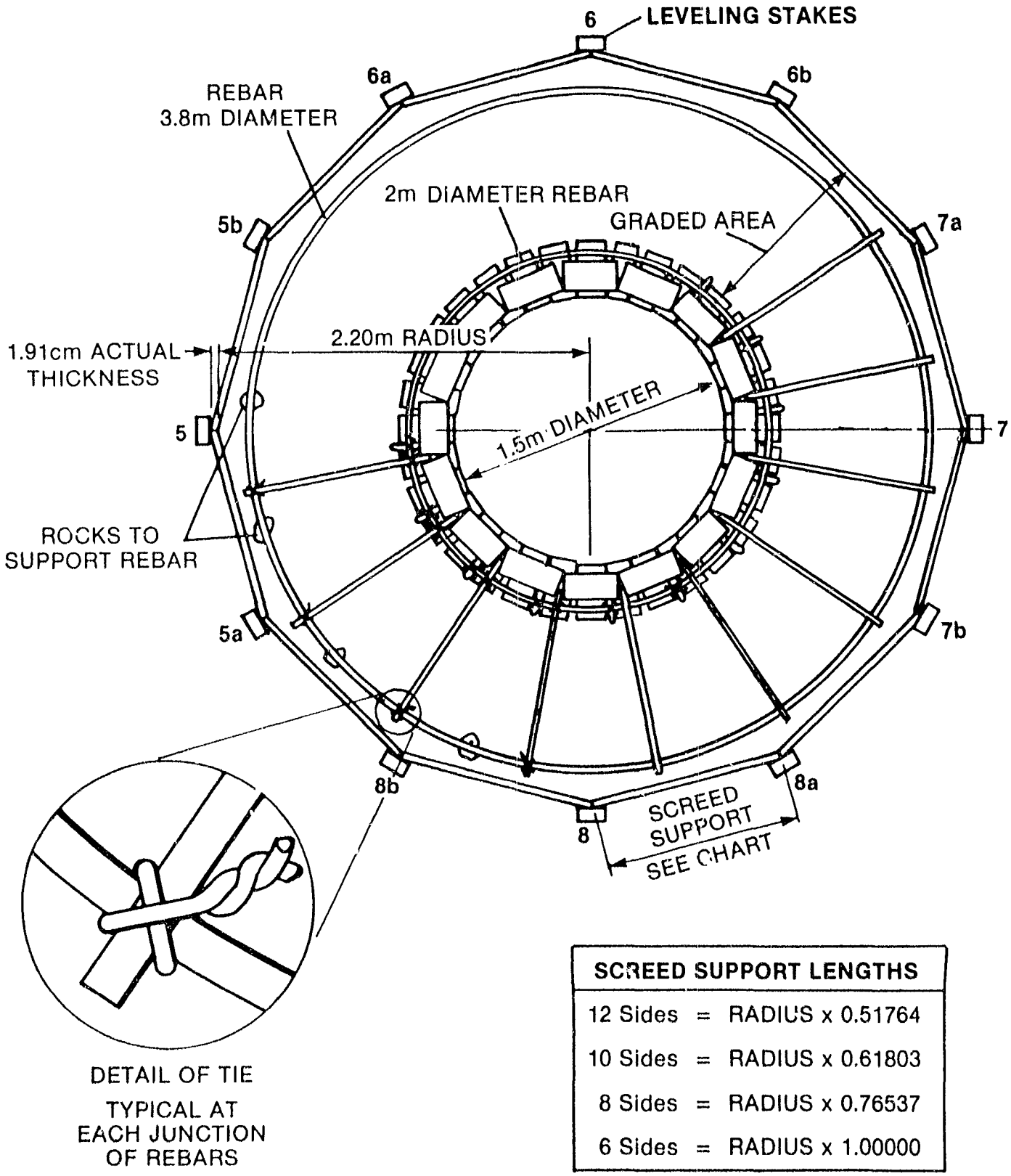

DETAIL OF TIE

TYPICAL AT
EACH JUNCTION
OF REBARS

SCREED SUPPORT LENGTHS		
12 Sides	=	RADIUS x 0.51764
10 Sides	=	RADIUS x 0.61803
8 Sides	=	RADIUS x 0.76537
6 Sides	=	RADIUS x 1.00000

Figure 2

PLACING SCREED SUPPORTS AND REBARS

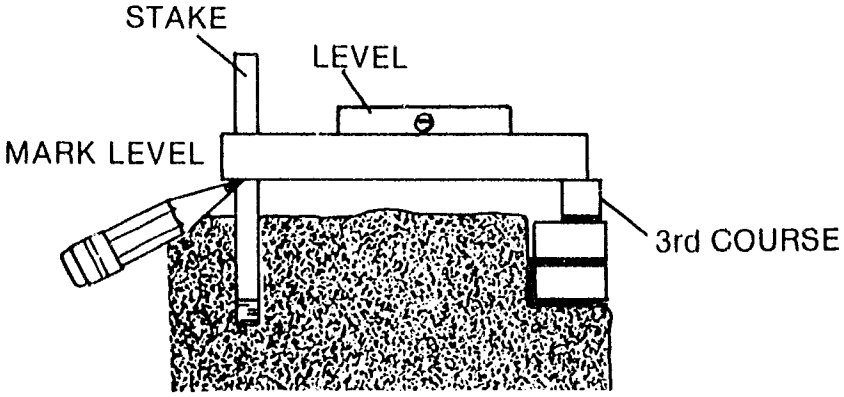

STEP 1 - PUT A LEVELING MARK ON ALL 12 STAKES. NUMBER STAKES AS SHOWN IN FIGURE 2.

ALL DIMENSIONS IN MM

STAKES	ABOVE LEVEL	AT LEVEL	BELOW LEVEL
7	25.4		
7a, 7b	15.2		
6b, 8a	5		
6, 8		0	
6a, 8b			5
5a, 5b			15.2
5			25.4

STEP 2 - MARK STAKES PER CHART FOR SCREED SUPPORT ELEVATIONS.

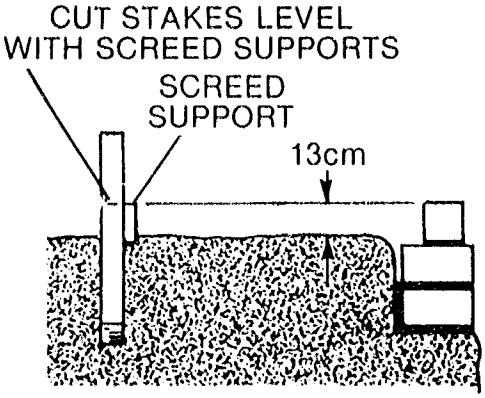

STEP 3 - CUT SCREED SUPPORTS TO SIZE (SEE CHART, PAGE 5, FOR LENGTH OF SIDES SELECTED). NAIL SCREED SUPPORTS TO STAKES IN LINE WITH SUPPORT ELEVATION MARKS.

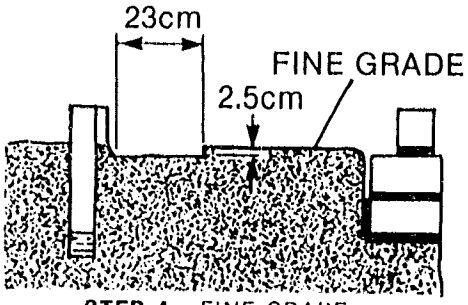

STEP 4 - FINE GRADE.

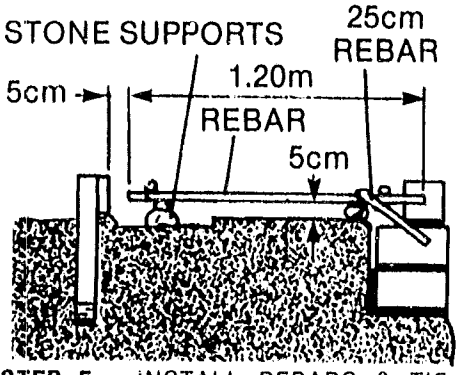

STEP 5 - INSTALL REBARS & TIE AT EACH JUNCTION OF REBARS.

Figure 3
SCREED CENTERING DEVICE

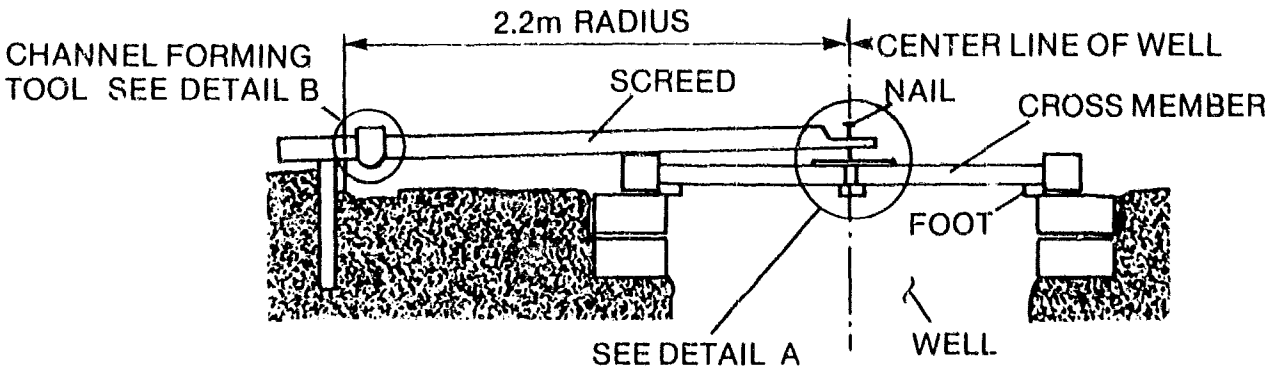

STEP 6 - MARK AND CUT WELL CROSSMEMBER TO FIT TIGHTLY INTO WELLS 3rd COURSE (MAINTAIN WELL CENTERLINE LOCATION). CUT FEET AND NAIL FEET TO ENDS OF CROSSMEMBER. CUT 5cm x 10cm SCREED PER DETAIL AND NAIL TO CENTERLINE OF CROSSMEMBER AS SHOWN. CUT CHANNEL FORMING TOOL AND ATTACH FORMING TOOL TO SCREED.

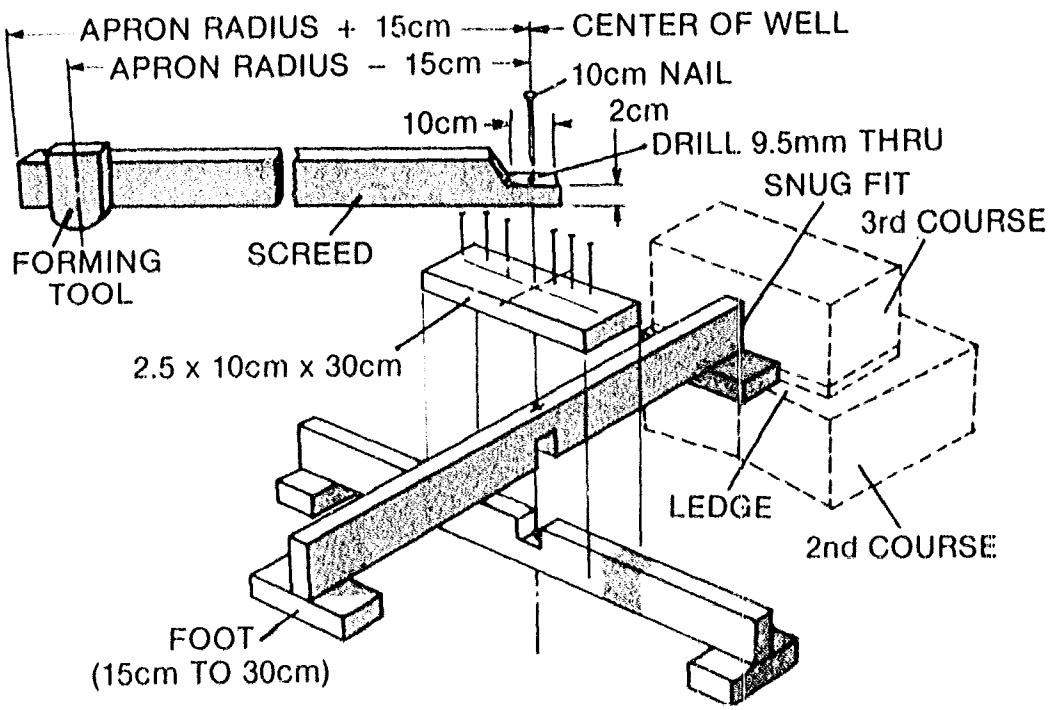

CONSTRUCTION OF CROSSMEMBER
DETAIL A

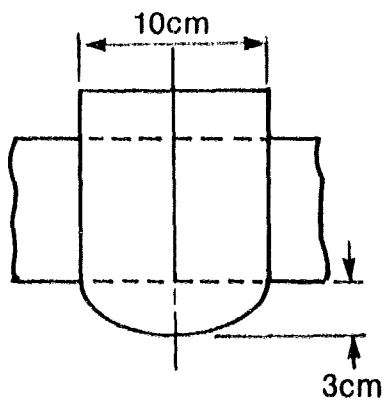

CHANNEL FORMING TOOL
DETAIL B

GUIDE TO SESSION 12: MIXING AND POURING THE APRON

Total Time: 7 hours 30 minutes

SUBJECT	PROCEDURE	TIME	HANDOUTS/MATERIALS	FLIPCHART REQUIRED
Session Overview	Trainer presentation	5 minutes		
Apron Construction	Lecturette	20 minutes		Major construction tasks
Preparation for Fieldwork	Team activity	35 minutes	Handout 12-1: Construction Steps for Apron Pour	
Mix and Pour Apron	Fieldwork	6 hours		
Question-Answer Session on the Apron Pour	Group discussion	20 minutes		
Closure	Trainer presentation	10 minutes		

SESSION 12: Mixing and Pouring the Apron

Total Time: 7 hours 30 minutes

OBJECTIVES

At the end of this session, the participants will be able to

- mix and pour concrete for an apron and
- describe construction steps and materials needed for building a circular apron.

OVERVIEW

Construction of the apron continues during this session. The participants mix the concrete, pour the apron, screed and smooth the surface, and learn how to secure the site and keep the concrete covered and moist during curing.

PLANNING NOTE FOR TRAINERS: It is important to organize in advance the transport of the construction materials to the well sites. Also the labor crew should be ready to complete the apron pour if the teams are unable to do so.

The participants also dig a drainage channel on the outer edge of the apron. The drainage ditch away from the apron will be completed during the headwall construction.

After this session the participants will not work in the field for several days to allow the cement to cure. During this session time is provided for the teams to review their learnings and fieldwork so far and to raise questions or concerns they may have.

PROCEDURES

1. Session Overview of Objectives and Activities **Time:** 5 minutes

   Present the session goals and provide an overview of the activities. Be sure the participants understand that mixing and pouring a concrete apron is a critical task, one requiring hard physical work in the field. Everyone will have the opportunity to mix, place, vibrate, and screed concrete.

2. Apron Construction - Lecturette **Time:** 20 minutes

   Review the purposes of constructing an apron and the reasons for using reinforced concrete. The following key points should be covered:

- An apron protects the well from contamination by surface water and animal and human filth.

- A well-built, reinforced concrete apron provides

  - the most effective ground cover (it prevents surface water from flowing into the well and pools of stagnant water from forming near the well),

  - a comparatively smooth surface which is sloped to drain excess water to a low point where it can be directed away from the well area,

  - a place where people can stand while getting water from the well, and

  - a clean surface where the water buckets may be set.

List the major construction tasks on a flipchart and discuss each briefly.

- Mix the concrete (continuous process).

- Pour concrete by shoveling it into the form and vibrating it.

- Screed and smooth the surface.

- Form a drainage channel on the outer edge of the apron.

- Cover and moisten the concrete.

- Clean up the site.

3. Preparation for Fieldwork **Time:** 35 minutes

Distribute Handout 12-1: Construction Steps for Apron Pour, which explains the field task. Allow time for everyone to read this handout. Have the construction teams meet to plan and prepare for the fieldwork. Proceed to the field sites.

4. Mix and Pour Apron - Fieldwork **Time:** 6 hours

Direct the teams to mix and pour the apron as indicated in Handout 12-1. Be sure there is time to clean up the site and secure it for the next several days while the concrete cures. Return to the classroom.

5. Question-Answer Session on the Apron Pour **Time:** 20 minutes

Hold a group discussion on the apron pour. If the hour is late and the participants are tired, this session may be held at the beginning of the next session, or if there is time, the discussion can be the wrap-up activity for this session. Choose the time based on the group's needs and

energy. It is important, however, to let the participants know when they will get their questions answered.

6. Closure: Review this Session and Link to the Next **Time:** 10 minutes

Ask participants to assess how comfortable they would now feel mixing and pouring a concrete apron and/or supervising a work crew responsible for the pour.

MATERIALS

Handout 12-1: Construction Steps for Apron Pour

CONSTRUCTION STEPS FOR APRON POUR

1. Prepare for the apron pour by calculating how much concrete will be needed and the quantity of materials needed to mix that amount. See Figure 1 for instructions on how to make these calculations.

2. Near the apron, assemble the sand, gravel, cement, and water that will be needed for mixing the concrete. Instructions for mixing concrete are given in Handout 9-1.

3. Prepare a concrete mix of 1 part of cement to 2 parts of clean sand and 4 parts of gravel on the mixing pad and mix with the appropriate amount of water. The mixture should be slightly wet so that it can be vibrated into all crevices, but not wet enough to run. (The concrete pour should be continuous so that the end result is a solid mass of concrete without any joints).

4. Deliver the concrete in a wheelbarrow or on a head pallet to the apron site. Shovel or dump it into the form at regular intervals so that it may be spread around to cover the whole apron area.

5. Vibrate the concrete (agitate it with 2.5 cm x 5 cm x 2 m sticks) as you spread it around evenly in the form. Do not mound it up in one place.

6. As the pour reaches the top of the form, move a straight edged screed (5 cm x 10 cm x 150 cm) back and forth horizontally to smooth the surface of the concrete. One end of the screed should be resting on the concrete block foundation and the other on the screed support at the outer edge of the apron.

7. Let the concrete settle for an hour or so or until it has stiffened a little. Then attach the channel forming tool to the screed 10 cm in from the inner edge of the screed supports (see Figure 2). Nail one end of the screed to the crossmember over the well so that the screed can be moved around the apron surface like a hand on a clock. Move the screed around the apron several times, gouging out the depression for the drainage channel. Work the surface of the drainage channel with a trowel to leave a smooth surface. Be sure to also cut out an opening from the drainage channel to the drainage ditch.

8. As the concrete sets, finish the surface using a wooden float. Move the float over the concrete surface with a circular motion to produce a roughened non-skid finish.

9. Cover the concrete with empty cement sacks and keep it moist for seven days.

10. Spread brambles on the apron to keep animals and people from walking on it. WARNING: The concrete must not be stepped on for at least two days. THIS IS IMPORTANT.

MATERIAL FOR ONE WELL

260 liters (.26 cubic meters) of cement (9.2 sacks)
520 liters (.52 cubic meters) of sand (19 sacks)
1040 liters (1.04 cubic meters) of pea gravel (38 sacks)

Pieces of wood cut to the following dimensions:

2 pieces - 5 cm x 10 cm x 200 cm (vibrating sticks)
4 pieces - 5 cm x 10 cm x 140 cm (screeds)
4 pieces - 2.5 cm x 7.5 cm x 14 cm pieces for attachments to the screeds
4 pieces - 2.5 cm x 15 cm x 30 cm and 4 pieces - 2.5 cm x 5 cm x 15 cm (wooden floats)

water
nails
empty cement sacks
20 meters of rope
brambles

EQUIPMENT FOR ONE WELL

4 flat-bladed shovels
2 wheelbarrows or head pallets
2 hammers
3 trowels
3 buckets
1 bar cutter

Figure 1

CALCULATIONS FOR CONCRETE MIX

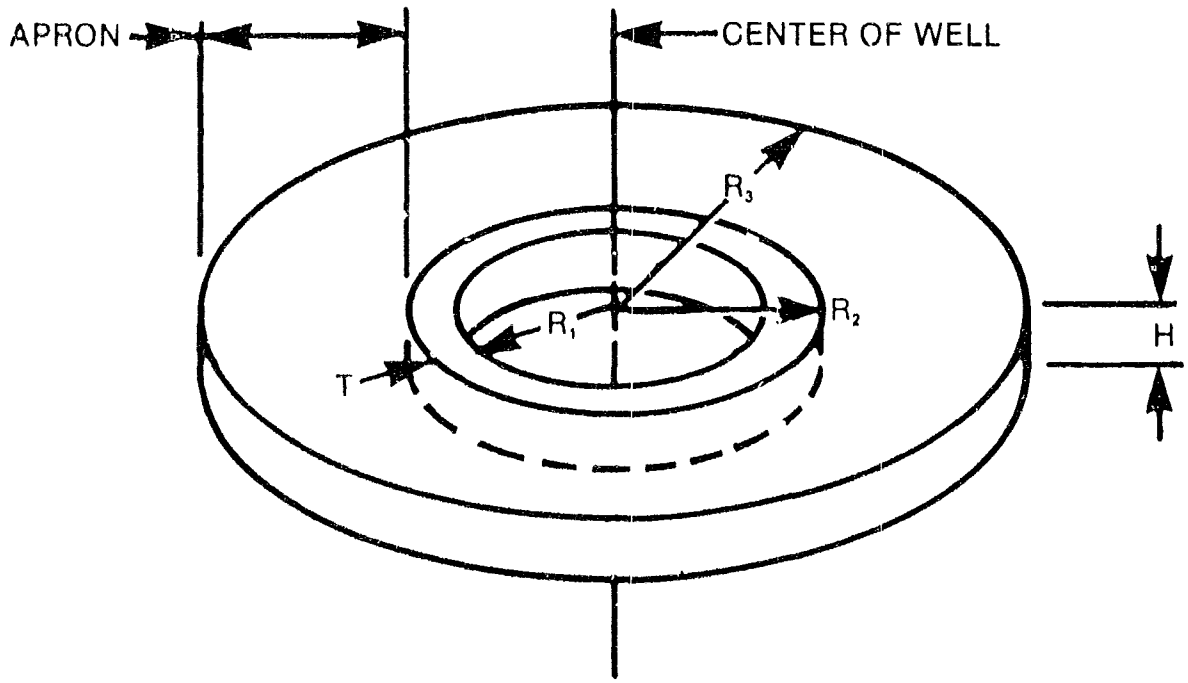

π = 3.14
H = 0.15m
T = 0.15m
R_1 = 0.75m
R_2 = R_1 + T
R_3 = 2.20m

V (APRON) = (π x R_3 xR_3 x H) - (π x R_2 xR_2 x H)

V = (3.14 x 2.2 x 2.2 x 0.15) - (3.14 x 0.9 x 0.9 x 0.15)
V = (2.28) - (0.38)
V = 1.9 (IN CUBIC METERS)

Figure 1 (Continued)

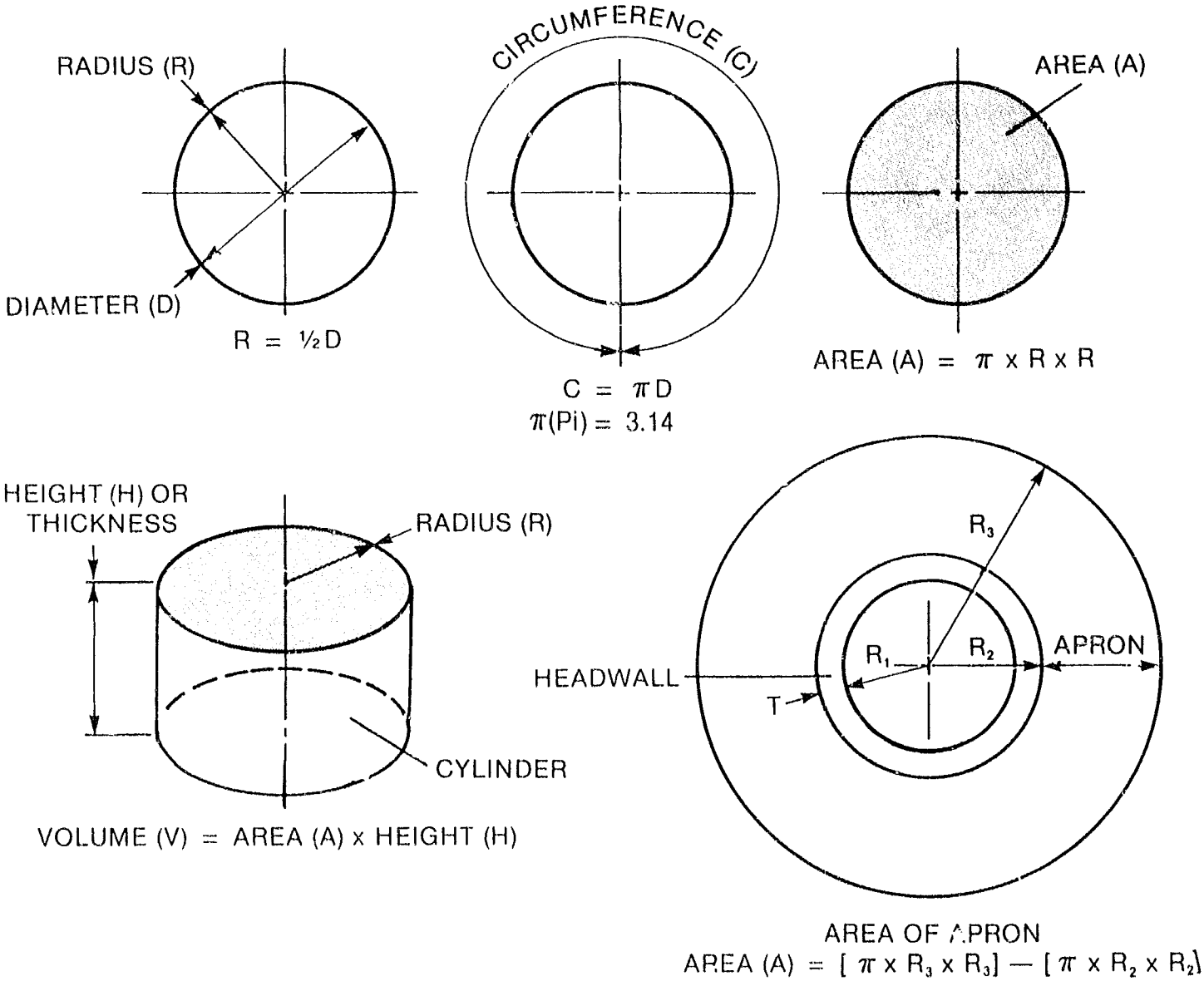

Figure 2

CONCRETE APRON POUR
(USING SCREED & SUPPORTS FOR FINISHING CONCRETE SURFACE)

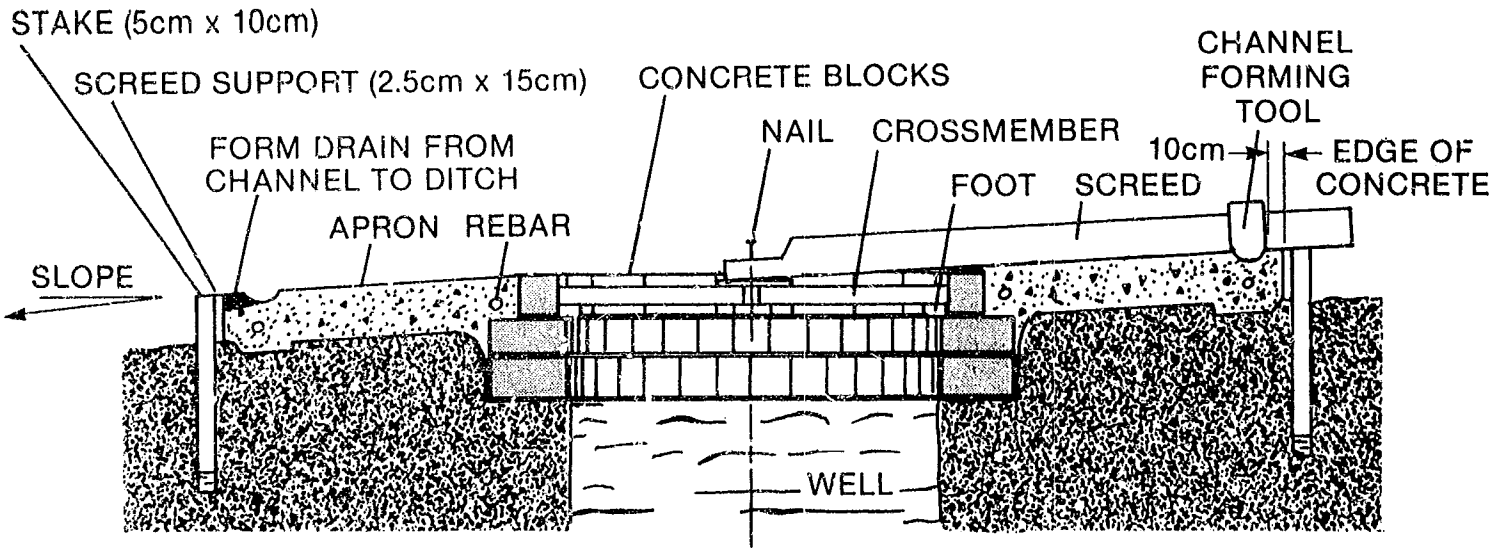

SECTION THROUGH CENTER OF WELL

GUIDE TO SESSION 13: USER EDUCATION

Total Time: 4 hours

SUBJECT	PROCEDURE	TIME	HANDOUTS/MATERIALS	FLIPCHART REQUIRED
Overview	Trainer presentation	10 minutes		
Strategy for Educating Communities	Small group activity	45 minutes		Group task instructions
Preparing the User Education Session	Small group activity	60 minutes	Handout 13-1: User Education Topics	Group task instructions
Presentation of the User Education Sessions	Small group presentation	70 minutes		
Evaluation of the Presentations	Group discussion	25 minutes		
Generalizing and Applying	Individual activity	25 minutes		Questions about user education programs
Closure	Trainer presentation	5 minutes		

SESSION 13: User Education

Total Time: 4 hours

OBJECTIVES

At the end of this session, the participants will be able to

- describe several strategies for educating users about the benefits of sanitary improvements of well conditions and
- design an educational approach to present information about the need for well improvements, handling and storing water, and maintaining a sanitary well site.

OVERVIEW

Educating potential recipients of sanitary improvement projects on the benefits, uses, and maintenance of such projects is a key aspect of any project promoter's or rural health worker's responsibilities. This session is designed to help the participants plan and implement appropriate user education strategies. Participants will plan a training session on a topic of their choice and practice presenting the session to others in the group. Participants will be able to adopt and use these training materials in their communities as appropriate.

PROCEDURES

1. Overview of Goals and Activities **Time:** 10 minutes

   Present the information contained in the overview and share the session objectives.

   Introduce the idea that an important aspect of any project promoter's work is to educate and train community people, especially in the areas of sanitation and health.

   State that participants will probably be faced many times with the need to educate and/or train a local group in effective sanitation practices. This session focuses on assisting participants to develop plans to use in educating others about improving sanitation conditions.

2. Strategy for Educating Communities - Small Group Task **Time:** 45 minutes

   Divide the participants into groups of four. These groups should be different from the construction teams. Have them discuss the following three points and prepare to share their conclusions in summary format

with the total group. Give them 25 minutes. Write the task on a flipchart.

- What strategies have you used to educate communities about health issues (i.e., presentations, discussions, home visits, home classes, etc.)?
- Which ones worked the best? Why?
- From this what can you deduce about how people learn?

Then lead the total group in a discussion based on the discussion points below.

- Ask participants to give examples of the strategies they have used and to tell which strategies worked best and why.
- Ask them for their ideas and thoughts about how people learn.
- Ask the group what kinds of methods and strategies are being used in this workshop to promote learning. Would any of these be effective for use with the community?

This discussion should take no more than 20 minutes and should culminate in a list of effective strategies and ways people learn. Point out that training and education strategies that actively involve the learner, such as discussions, planning or problem-solving meetings, and demonstrations followed by practice, are all usually more effective than lectures and presentations which put the learner in a passive role.

3. Preparing the User Education Session - Small Group Task **Time:** 60 minutes

Distribute Handout 13-1: User Education Topics. Divide the trainees into four teams and assign them the following task. Write the instructions on a flipchart.

- Plan how you would deliver a 60-minute user education session on one of the topics listed in Handout 13-1.
- Decide who your target group is (mothers, school children, a health committee, community elders, etc.) and where the session will be held (school, religious meeting, clinic, etc.).
- Select an educational activity to use for your training (skit, role-play, etc.) and prepare to present an abbreviated (15-20 minutes) presentation of your session to the full group.
- You have 60 minutes to prepare your session.

4. Presentation of the User Education Sessions **Time:** 70 minutes

Divide the participants into two groups so that two presentations can go on simultaneously. This way each group will have 20 minutes for a presentation and 10 to 15 minutes for feedback and discussion.

Ask each group to present their session. The groups should be responsible for explaining the background and the context. Keep each group's presentation to 15 to 20 minutes with a brief discussion after each session. Praise each group on points well made and ask how they felt about their presentation.

This session is designed to provoke new ideas about ways to educate others. Some groups may exceed the allotted time if they get creative about their topic. Allow some extra time for this activity if you think it would be useful. Be sure, however, to leave time for discussion after the practice session.

5. Evaluation of the Presentations **Time:** 25 minutes

Lead a discussion in the total group about the presentations. Have each group briefly summarize what worked well in their session and what improvements they plan to make based on feedback from the group.

Ask the groups how they might revise their session so that it can be used back home.

6. Generalizing and Applying - Individual Task **Time:** 25 minutes

Have the participants work individually to answer the following two questions. Write them on a flipchart:

Write answers to the following questions.

- What are the essentials of an effective user education program?
- What are some strategies I plan to use in my community in order to cover the essentials I have listed?

Tell participants to share their responses with another person.

7. Closure: Review this Session and Link to the Next **Time:** 5 minutes

MATERIALS

Handout 13-1: User Education Topics

USER EDUCATION TOPICS

Select one of these topics:

Topic A. Water and Your Life

For this topic, cover some or all of the following points:

- List/discuss uses of water.
- What is the most important use of water for people in your community?
- What kind of water can make people ill?
- What happens when you drink water that is not clean?
- Who gets sick most often?
- What can you do so children do not get diarrhea often?

Topic B. Why Improve Sanitary Conditions around a Well

For this topic, cover some or all of the following points:

- How disease spreads through contaminated water
- Effects of livestock and human waste.
- Keeping laundry and other washing away from drinking water.
- Benefits of low-cost improvements.

Topic C. Maintenance of Well-Site

For this topic, cover some or all of the following points:

- Periodic disinfection of water.
- Maintenance of rope bucket and any pulley device.
- Keeping well area clear of weeds, puddles, and debris.
- Daily or frequent sweeping and clean up of apron and ground surface around well.
- Maintenance of fence or other means of keeping animals away.
- Ensuring the water is used only for drinking.

Topic D. Collecting, Storing, and Using Water

For this topic, cover some or all of the following points:

- What sources of water do people use in your community?
- Which sources have the best water for drinking?
- Some communities have clean water but children still get diarrhea. Why?
- How do people in your community collect water?
- How do people store water?
- How can water get dirty?
- What are some things a mother can do so her child gets clean water?

GUIDE TO SESSION 14: COST ESTIMATING AND PLANNING

Total Time: 2 hours 45 minutes

SUBJECT	PROCEDURE	TIME	HANDOUTS/MATERIALS	FLIPCHART REQUIRED
Overview	Trainer presentation	5 minutes		
Estimating Materials, Equipment, and Labor Needs	Lecturette	30 minutes	Trainer Notes: Estimating for Construction Handout 14-1: Resources Checklist	
Estimating	Individual and small group activity	70 minutes	Construction Diagrams (Handouts 7-1, 7-2, 9-3, 11-1, 12-1, 15-1, and 15-2)	Small group task instructions
Results of Estimating Exercise	Group presentation and discussion	40 minutes		
Review and Generalization	Discussion	15 minutes		List of learnings
Closure	Trainer presentation	5 minutes		

SESSION 14: Cost Estimating and Planning

Total Time: 2 hours 45 minutes

OBJECTIVES

At the end of this session, the participants will be able to

- estimate the basic costs of the material and equipment needed for a specific project and
- estimate the type and amount of labor needed for a project.

OVERVIEW

In this session, the participants learn the mechanics and principles of cost estimating and planning for a well improvement project. They practice using cost estimating and planning worksheets that will be a practical tool for use back home.

PLANNING NOTE FOR TRAINER: Handout 14-1: Resources Checklist should be modified as appropriate so that it lists all resources being used in the workshop construction project. Also, local costs for materials should be researched prior to the workshop.

PROCEDURES

1. Overview of Objectives and Activities **Time:** 5 minutes

   Share the session objectives and provide an overview. Refer to the project cycle and explain where cost-estimating fits in. Be sure that participants understand that cost estimating comes in the earlier steps of pre-planning and assessment. The session is scheduled at this time so that the participants will have something to do while the concrete cures. This is not the logical sequence of activities. Cost estimating and planning should occur when the project promoter is working with the community at the decision-making stage.

2. Estimating Material, Equipment, and Labor Needs - Lecturette **Time:** 30 minutes

   Explain to the participants that they will now learn how to estimate the cost of a well improvement project such as the one being constructed in their fieldwork. The worksheets introduced in this session can also be used for estimating the cost of other improvement projects.

Using Trainer Notes: Estimating for Construction (to be found following the handouts for this session) give a brief lecturette on estimating costs and labor needs for the workshop well improvement project. Make sure to provide all the needed dimensions, referring to the construction sketches from the fieldwork as appropriate.

The lecture should give guidelines for estimating all appropriate items listed in Handout 14-1: Resources Checklist. Give examples to reinforce major points.

Discuss the difficulty of arriving at a realistic estimate of time and labor needs. Give examples of potential problems which can occur.

Ask for questions and clarify points as needed. Tell participants that they will practice doing a cost estimate right after the lecturette.

3. Estimating - Individual and Group Exercise **Time:** 70 minutes

Tell the participants that they will be doing a cost estimate. In order to save time, give them the costs for the basic materials used in the exercise. Give costs for the following:

- 1 50 kg sack of cement
- 1 piece of lumber - 4 cm x 24 cm x 400 cm
- sand and gravel - can be obtained free three kilometers away but transport is needed
- rebar - 1 meter
- nails - per kg
- skilled labor - cost per day
- unskilled labor - cost per day

Make sure participants have their handouts of the construction diagrams available. Ask each individual to take 20 minutes to complete the estimating exercise in Handout 14-1 using the costs that they have just been given.

As soon as most of the participants have completed the estimating exercise, have them meet in their four construction teams to carry out the following task. (Write it on a flipchart.)

- Compare and discuss your individual estimates.
- Agree on a final estimate as a team.
- Be prepared to present your team's cost estimate to the entire group.
- Take 45 minutes.

4. Results of Estimating Exercise **Time:** 40 minutes

Have each team give a report on its estimate. After the first team reports, other teams should merely add new or different information.

After the team reports have been given, discuss the following questions:

- Was it difficult to estimate labor resources?
- What type of information might improve the estimates?
- Were there any surprises or was anything learned which was unanticipated?

5. Review and Generalization **Time:** 15 minutes

Ask participants to give examples of what they learned about estimating and evaluating costs and labor needs. Record their responses on a flipchart.

Ask for examples of unanticipated problems. For example, market day comes and your work force leaves for the day.

Summarize by stressing the importance of accurate and proper calculations. Lead a brief discussion on the difficulty of estimating correctly the time needed for each task. Stress the importance of planning and having contingency plans.

6. Closure: Review this Session and Link to the Next **Time:** 5 minutes

Ask for any questions about the day's activities including the prior session on user education. Remind the participants that during the next session they will be working in the field all day constructing a headwall.

MATERIALS NEEDED

Handout 14-1: Resources Checklist
Participants' construction diagrams from previous sessions: See Handouts 7-1, 7-2, 8-1, 9-3, 11-1, 12-1, 15-1, and 15-2.

ESTIMATING FOR CONSTRUCTION - LECTURE NOTES

Several types of estimates are required in order to determine quantities of materials, days of labor, and costs of materials, tools, and manpower. Board feet of lumber must be determined for forms. Amounts of concrete must be figured to estimate the desired number of bags of cement, buckets of sand, and buckets of gravel needed for the project. The number of tools (saws, machetes, shovels, etc.) must be determined. Labor and transportation cost are also necessary.

To prepare an estimate one must have a set of accurate plans with correct measurements and recommended materials and mixtures. Centrally developed plans usually give exact quantities required for materials and tools. However, these plans frequently require modification due to local conditions or user preference so it is best to have some knowledge of the techniques for estimating the inputs to a project.

FREQUENT CALCULATIONS

Many estimates require the builder to determine the area and volume of components or materials. Whether these calculations are used for estimating volume of concrete, the amount of sand in a given pile, or the number of bricks needed for a wall or vent pipe, basic formulas apply.

Volumetric Formulas

These formulas are used for many of the estimates in the improvement of wells. When using these formulas it is important to remember that all measurements must be in the same units (inches, feet, centimeters, meters). Therefore if some dimensions are expressed in centimeters and some in meters they should all be converted to the same unit.

Example: A privy slab 1.2 m x 0.9 m x 10 cm

All measurements must use the same or related units

10 cm is converted to 0.1 m

$V = H \times W \times L$

$V = 1.2 \times 0.9 \times 0.1 = 0.11\ m^3$

Volumes in construction are frequently expressed in cubic yards or cubic meters. There are 27 cubic feet in one cubic yard. One cubic yard = 0.963 m^3. One Cubic foot = 0.0283 m^3 (28.3 liters).

Key: V=Volume H=height W=width L=length B=base R=radius π=3.12

1. Rectangular solid (box)

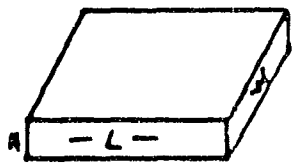

$V=H \times W \times L$

2. Extended Triangle

$V=h_1$ x area of base

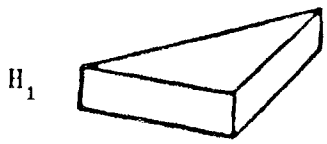

base

plan

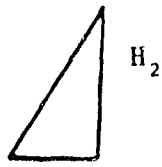

Plan

Area = $1/2B \times H_2$

3. Cylinder

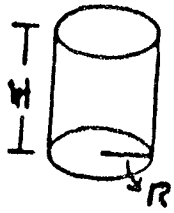

$V=H$ x area of base

Area of base = πR^2

$V=H \times (\pi R^2)$

4. Cone

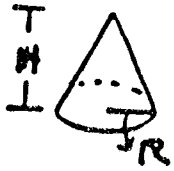

$V=1/3H \times (\pi R^2)$

ESTIMATING CONCRETE

If the volume of a component (i.e., the slab) is known, the amount of sand, gravel and cement required can be determined. These materials are always in a proportionate volume, for example 1 part cement to 2 parts sand to 3 parts gravel, generally expressed as 1:2:3. For this exercise we are using the 1:2:3 mixture rather than the more common 1:2:4 mixture. The following approximate volumes of ingredients will be required for one cubic meter (1 m^3) of concrete.

Cement 0.25 m^3

Sand 0.50 m^3

Gravel 0.75 m^3

Note that this same ratio will hold true for any volume of concrete.

The individual volumes of ingredients add up to more than one cubic meter (1.5 cubic meters). This excess allows for the spaces between the pieces of gravel and particles of sand. A pile of gravel can be 10 percent open space (voids). When sand and cement are added, the sand fills in the spaces in the gravel and the cement fills in the spaces between sand particles. In the example above a factor of 1.5 was used to increase the volume of each ingredient.

Accounting for the spaces in gravel and sand gives a fairly accurate estimate for the ideal world. Unfortunately, however, there is always some waste and loss of materials in the real world. Sand and gravel get scattered from the pile. It is difficult to get the last 10 percent of a sand pile up off the ground. Some concrete will spill out of the form, etc. So for estimating, especially for a multi-unit project, add a 15 percent margin for each ingredient.

The final volume figures need to be converted to local standard measurements (bags, buckets, etc.). The quantity held by local containers will need to be determined by filling them with a measured quantity. The volume of a locally provided bag of cement must also be determined.

Provide easy-to-follow examples of calculations.

ESTIMATING LUMBER

Lumber, timber, or poles should be estimated by figuring the number of boards or poles required in specific lengths and widths. How lumber (finished/cut boards) is estimated depends on its cost and availability. If all wood is to be purchased, then the estimate should be as exact as possible. A margin of 5 percent should be added to allow for waste and errors. If bush poles are used from a local supply, the estimates can be approximate with an added 15 to 20 percent for error.

In determining the amount of lumber/poles required, an accurate plan is essential.

ESTIMATING MASONRY

Estimates for block or brick walls are determined by dividing the surface area of the wall by the surface area of one brick/block and its mortar joints on two sides.

Example

$1\ m^3 = 1{,}000{,}000\ cm^3$

If a block is 18 cm wide x 38 cm long and 2 cm of mortar is used around the block, the total width is 20 cm (18+2) and the total length is 40 cm (38+2). The area of a block is determined by: A=height (H) x length (L)

$A = 20\ cm \times 40\ cm = 800\ cm^2 = .8\ m^2$

If the wall is 2 m high x 3 m long its surface area = 6 m^2.

Therefore, to determine the number of blocks needed divide the area of the wall by the area of a block.

$$\frac{\text{area of wall}}{\text{area of block}} = \frac{6\ m^2}{.8\ m^2} = 75 \text{ blocks}$$

Add 20 percent to allow for waste and loss.

To estimate the total mortar required, calculate the volume needed under and on the side of each block and multiply it by the total number of blocks. For an 18 cm x 18 cm x 38 cm block with mortar joints 2 cm thick, the total volume for one block would equal

$$\underset{\text{(side of block)}}{[2\ cm \times 18\ cm \times 18\ cm]} + \underset{\text{(underside of block)}}{[2\ cm \times 18\ cm \times 38\ cm]}$$

$$648\ cm^3 + 1368\ cm^3 = 2016\ cm^3$$

Total for the wall = 75 blocks x 2016 cm^3 = 151,200 cm^3 = .15 m^3 (approx.)

Therefore, if the mortar is a mixture of 1 cement to 3 sand, then approximately .04 m^3 of cement and .11 m^3 of sand are needed for each wall.

Multiply this volume by the number of walls of equal size to determine the total amount of cement and sand required.

Add 20 percent to mortar volumes to allow for waste and loss.

ESTIMATING LABOR AND OTHER NEEDS

Discuss the need for estimating labor and transportation costs and taking into consideration other factors such as time needed and weather to ensure comprehensive project planning. Fixed formulas do not apply here, instead one has to rely on experience-based judgments for a given locale.

Summarize by stressing the importance of estimating labor and other needs.

RESOURCES CHECKLIST

Materials	Quantity	Cost
<u>Mixing and Pouring Concrete Blocks</u>		
Forms for concrete blocks and measuring box		
Cement		
Sand		
Clean water		
Engine oil		
Nails		
<u>Excavation and Building Foundation</u>		
Leveling stakes and wood for centering cross, etc.		
Concrete blocks		
Cement		
Sand		
Clean water		
<u>Prepare Mix and Pour Apron</u>		
Screeds		
Stakes		
Cement		
Rebar		
Tie-wire		
Sand		
Gravel (pea)		
Nails		
Rope		
<u>Headwall Construction</u>		
Cement		
Sand		
Concrete blocks		
Rebar		
Tie-wire		
Clean water		

Materials	Quantity	Cost
Well Disinfection		
Chlorine Compound		
Clean Water		
_____		
_____		
_____		

Activity/labor	*Skills	Number of persons	Time	Cost
Mix and pour concrete blocks				
Excavate and build foundation for apron				
Prepare for apron pour				
Mix and pour apron				
Headwall construction				
Water lifting device				
Well Disinfection				
Project clean up				
Transportation of materials				
Total Labor Cost				

*Mason, laborer, carpenter, etc.

Tools and Equipment	Quantity	Cost
Carpenter's levels		
Shovels, round-and flat-blade		
Buckets		
Hammers		
Crowbars		
Wheelbarrows		
Steel trowels		
Axes		
Metric tapes		
Pliers		
Paint brushes		
Plumb bobs		
Bar cutters or hacksaws		
Total Tools and Equipment Cost		

Total Project Cost

Materials
Labor
Tools and Equipment

Total

GUIDE TO SESSION 15: HEADWALL CONSTRUCTION AND DRAINAGE DITCH

Total Time: 7 hours 40 minutes

SUBJECT	PROCEDURE	TIME	HANDOUTS/MATERIALS	FLIPCHART REQUIRED
Overview	Trainer presentation	5 minutes		
Headwall Construction	Lecturette	15 minutes	Handout 15-1: Steps in Headwall Construction	Notes for lecturette
Drainage Construction	Lecturette	15 minutes	Handout 15-2 Drainage Ditch Construction	Notes for lecturette
Preparation for Fieldwork	Small group activity	30 minutes		
Constructing the Headwall and Drainage Ditch	Fieldwork	6 hours		
Review and Generalization	Discussion	30 minutes		
Closure	Trainer presentation	5 minutes		

SESSION 15: Headwall Construction and Drainage Ditch

Total Time: 7 hours 40 minutes

OBJECTIVES

At the end of this session, the participants will be able to

- construct a headwall of concrete blocks,
- excavate an adequate drainage ditch, and
- prepare the headwall to accommodate a selected water lifting device.

OVERVIEW

This session begins with a review of the reasons for building a headwall and an overview of the construction tasks involved. The greater part of the session is spent in the field constructing the headwall and completing the drainage ditch.

PLANNING NOTE FOR TRAINER: The participants will most likely be able to complete the headwall construction during this session. If they aren't a work crew should be available to complete the final step.

Steps required prepare the headwall to accommodate the water lifting device need to be added to this session. Also the exact nature of the drainage ditch to be built needs to be decided and Handout 15-2: Drainage Ditch Construction needs to be modified appropriately.

PROCEDURES

1. Overview of Objectives and Activities **Time:** 5 minutes

   Share session goals and give an overview of how the day will be spent. Tell participants they will work on both the headwall and drainage ditch today.

2. Headwall Construction- Lecturette **Time:** 15 minutes

   Review the following information with the participants. Use a flipchart as appropriate.

   - A headwall is built above the level of the apron to

     - prevent dirt and filth from being pushed or blown into the well from the apron surface,

- prevent water from running into the well,
- keep people and animals from falling into the well, and
- make it convenient to draw water from the well.

- The headwall must be strong enough to withstand people leaning on it and animals pushing against it.
- Care must be taken to bond the headwall to the apron so that water will not seep under the headwall into the well.
- Concrete blocks have been chosen as the building material for the headwall because
  - they can be made at the well site in home-made forms with available labor,
  - the materials for the concrete blocks are available since they were also used for the concrete apron pour,
  - they can be laid easily to form a strong, circular structure, and
  - they can be used to construct both the foundation for the apron and the headwall.

Pass out Handout 15-1: Steps in Headwall Construction, and ask participants to review it. Go over the construction steps.

3. Drainage Construction - Lecturette **Time:** 15 minutes

Tell participants they will also construct the drainage ditch today. Provide the following information about the purpose and types of drainage. Use a flipchart as appropriate

- As water is to be lifted from the open well by hand with a bucket or other container, not much will be spilled on the apron. Whatever is spilled will flow to the lowest spot on the apron along the drainage channel prepared for that purpose. This water should be directed away from the well area to a lower place, preferably a nearby field or natural drainage channel.
- Often there is a natural slope away from the well to a low place, and it is thus unnecessary to go through the process of setting leveling stakes for excavating a drainage ditch, as described in Handout 15-2: Drainage Ditch Construction. When this is the case, a simple ditch about 25 cm wide at the bottom and 25 cm deep will carry the spilled water away from the well. The process of establishing the slope of the ditch will be required only when the ground surface around the well is comparatively level. Care must be taken to assure that the ditch slopes away from the well enough to carry the water away.

- In the few places where it is not possible to drain the water away to a lower area, a soakaway pit should be constructed at least 5 meters from the edge of the apron.

- If the ground beyond the edge of the apron is fairly impermeable, it is not necessary to line the drainage ditch, but, if the soil is permeable and porous (such as sand), the ditch should be lined for at least 5 meters from the edge of the apron.

- Describe the drainage ditch to be constructed here. (See the options described in Handout 15-2.)

Pass out Handout 15-2 and ask participants to review it. Go over the construction steps.

4. Preparation for Fieldwork **Time:** 30 minutes

Give the construction teams time to prepare for the day's activity and to ask questions they still have after reviewing the handouts. Tell them it is important to complete the drainage ditch at least by the end of the day. They should plan their work accordingly. Also the teams should decide how they will divide their time between the drainage ditch and headwall. Everyone should get practice in both tasks.

5. Constructing the Headwall and Drainage Ditch - Fieldwork **Time:** 6 hours

Have the teams go to the field and work on construction tasks. Explain how the headwall should be prepared to accommodate the water lifting device.

In particular, be sure that

- the mortar is properly proportional (1:2) and mixed,

- the sand and water are clean and free of debris,

- the bottom layer of concrete blocks are well worked into the mortar bed on the concrete apron and on the top layer of concrete blocks in the foundation,

- the inner corners of the blocks touch to form a continuous ring,

- the joints between the concrete blocks are completely filled with mortar,

- excess mortar is removed from inside and outside of headwall,

- no mortar is left on the concrete apron,

- the sides of the headwall are plumb, and
- the first layer of blocks is set 25 mm inside the face of the top block in the foundation (see Handout 15-1, Figure 1).

6. Review and Generalization **Time:** 30 minutes

After returning to the classroom, ask as many of the questions listed below as possible depending on the time available.

- Were problems encountered that need further discussion?
- What decisions did your team make today and why?
- How effectively did your team work? What did you learn about teamwork today?
- What did you learn during the session?
- What did you have the most difficulty with?
- What tasks do you need more practice with?

7. Closure: Review this Session and Link to the Next **Time:** 5 minutes

MATERIALS

Handout 15-1: Steps in Headwall Construction
Handout 15-2: Drainage Ditch Construction

STEPS IN HEADWALL CONSTRUCTION

1. Carry the previously made concrete blocks to the apron and stack them near the headwall.

2. Mix the cement mortar (1 part cement to 3 parts clean sand with water, to form a workable paste). The mortar should be damp enough so that moisture will come to the surface when it is troweled with a steel trowel, but not wet enough to be sloppy or runny.

3. Carry the mortar to the headwall area and leave a portion of it there for the use of the groups which will be laying the blocks. Dampen the blocks before laying them.

4. To establish the inner edge of the headwall, measure 25 mm in from the inside face of the concrete block foundation and mark the spot on the apron surface.

5. Trowel a 15 cm wide layer of mortar on the apron surface starting from the mark set in Step 4 to form the bed for the first ring of concrete blocks in the headwall.

6. Place the first block on the mortar bed with the edge of the block set at the 25 mm mark. Settle the block into the mortar by moving it lengthwise.

7. Place a block at both ends of the block laid in Step 6 and settle it in place with the inner corners of the blocks touching.

8. As soon as the first three blocks have been laid by the first two teams, the other two teams should start laying blocks, one team at each end.

9. Continue until the first layer of concrete block has been laid.

10. As the blocks are laid fill the spaces between the ends of the blocks with mortar and trowel a bed of mortar on top of the first layer of blocks.

11. Clean off the excess mortar from the inner and outer surfaces of the wall. Using a trowel, smooth the joints in the outer wall so that they are even with the surface of the concrete blocks.

12. If the ends of the last two blocks laid in the first layer do not come together, it may be necessary to fill the gap with mortar or by using a small block in the wall (see Handout 9-3, Figure 2 which shows an adjustable form for making a small concrete block).

13. As the first layer is completed, place the next layer on it with the blocks placed as shown in the attached figure.

14. To make sure that the inside wall of the headwall is vertical, plumb up from the inner edge of the foundation wall and set the blocks in 25 mm from the plumb line.

15. Continue laying the blocks on a mortar bed and filling the spaces between the ends of the blocks until six layers have been placed, for a total height of about 0.9 meters. (NOTE: The number of layers and total height may be affected by the type of water-lifting device selected and the size of the concrete blocks).

16. Cap the top block of the headwall (see the figure). Bend 3 mm rebar into a circle so that it fits on the center of the top layer of blocks. Overlap the ends of the rebar 20 mm and tie it with tie-wire (optional).

17. Lay the circle on top of the headwall. Tie 15 mm pieces of 3 mm rebar to the circle so that they are forced into the mortar which has already been trammeled into the spaces between the ends of the top layer of blocks. The rebar circle should be 19 mm above the surface of the top layer of blocks. Use small stones to prop it up.

18. Trowel a thick layer of concrete along the centerline of the top layer of blocks and work it down to form a rounded surface 40 mm above the centerline of the top of the headwall. (This assumes the headwall is to be built with a rounded top for pulling buckets over the top.) The concrete for this mounded layer should be dry enough to stay in place as it is worked into shape.

19. Clean off both faces of the headwall and the surface of the apron as work progresses.

20. Cover the headwall with empty cement sacks and keep it moist for seven days.

21. Place a barrier of brambles around the headwall so that people and animals cannot push against it.

MATERIAL FOR ONE WELL

1.5 sacks of cement
4.5 sacks of sand
water
63 concrete blocks - 15 cm x 20 cm x 40 cm
5 meters of 10 mm rebar (optional)
2 meters of tie-wire

EQUIPMENT FOR ONE WELL

3 flat blade shovels
4 buckets (1 to carry the mortar from the mixing pad to the headwall area and 3 to hold the mortar as it is being used in laying the blocks)
1 mixing pad
3 steel trowels
1 pair of rebar cutters
2 pairs of pliers
2 plumb bobs

METHOD FOR CAPPING HEADWALL

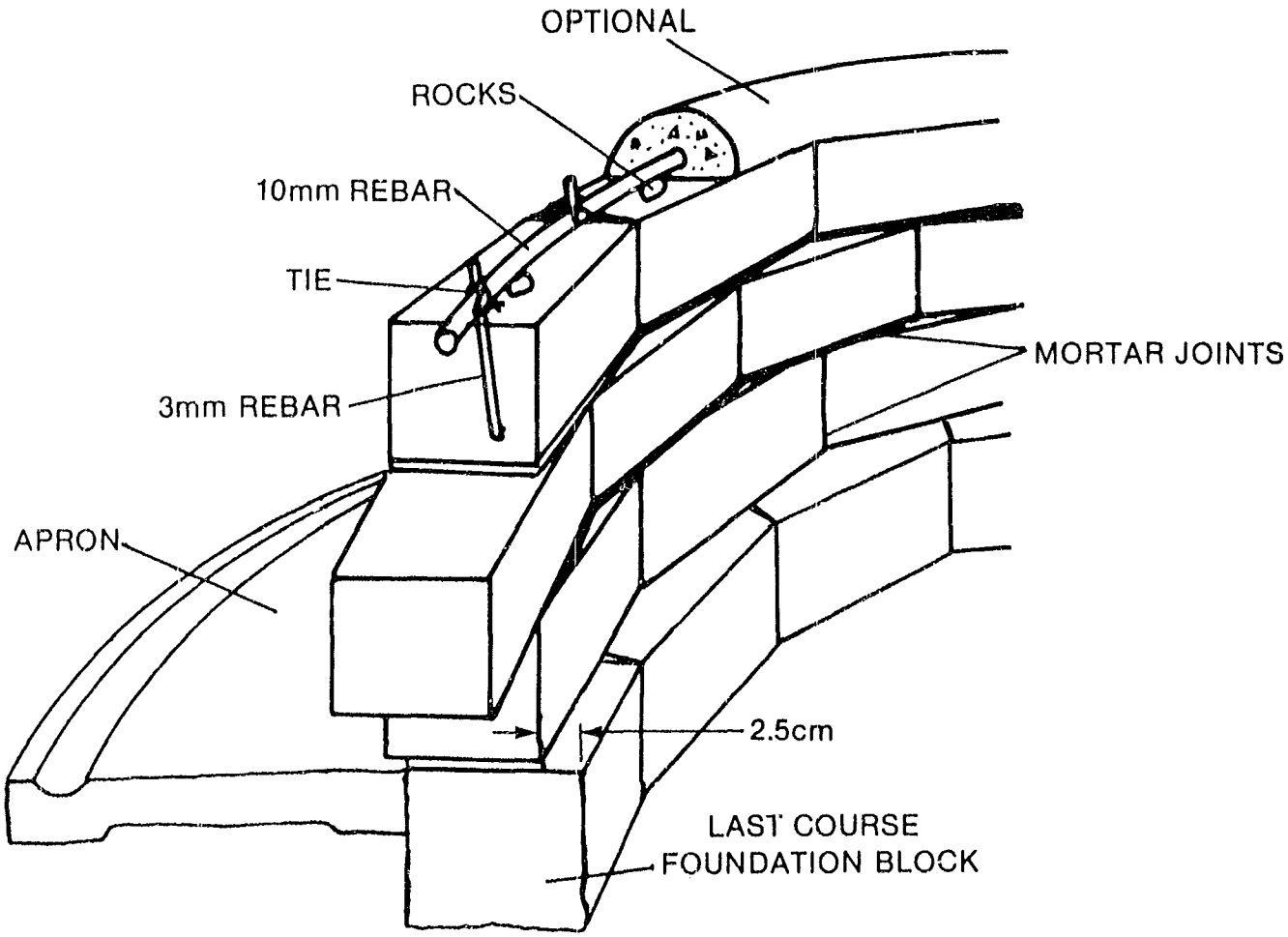

DRAINAGE DITCH CONSTRUCTION

This construction sequence is required only if the ground surface around the well is primarily level. In such an instance, elevation stakes must be set as a guide for digging the ditch to ensure that it slopes away from the apron appropriately. Where the ground surface is already sloped, a simple 25 cm wide x 25 cm deep ditch will provide adequate drainage.

Follow these steps to establish the elevation of the drainage ditch.

1. Set a 2.5 cm x 5 cm x 100 cm stake at the edge of the apron at the low point where the drainage channel drains from the apron. Next set 2.5 cm x 5 cm x 100 cm stakes at 250 cm intervals until four have been set in a line from the first stake to the low point where the water is to drain (see figure). When a carpenter's level is available, proceed as follows:

   a. Mark the first stake at the edge of the apron at the same level as the bottom of the exit from the apron drainage channel.

   b. Using a 5 cm x 10 cm x 260 cm straight-edge and the carpenter's level, hold the straight-edge with the top at the leveling mark on the first stake and mark the second stake at that same level. Measure 15 mm down from that leveling mark and mark the elevation. The second mark will then be the reference point for the next stake.

   c. Proceed in the same way to mark stakes 3, 4, and 5.

2. When a carpenter's level is not available, use a 1 meter length of hose full of water to level the 5 cm x 10 cm x 260 cm straight-edge and proceed as in Step 1a. The hose must be clear (translucent) so that the water level can be seen. Leveling is accomplished by holding the hose by each end and noting the water levels. The line connecting the two water levels at each end of the hose is a level line.

3. To establish the bottom of the ditch excavation, measure down 10 cm from the elevation mark. This shows how deep the ditch must be dug at each stake. The ditch should be at least 25 cm wide at the bottom with the walls sloping outward so that they will be stable.

4. If lining is necessary, it should extend 5 meters from the apron. It should cover the bottom of the ditch and extend up the sides about 20 cm. The lining may be made of the following materials.

   - Masonry to conform with the shape of the ditch. The ground should be moistened and the stones or slabs for the masonry should be laid on a mortar bed. The joints between the masonry should be filled with mortar. The masonry lining should be

approximately 15 cm thick with the upper surface smooth to allow the drainage water to flow freely.

- Concrete (1:3:6) mixed fairly dry (so that a pile 25 cm tall will not slump to less than 20 cm). The bottom and sides of the ditch should be moistened and sprinkled with a thin layer of sand. The concrete should be mixed and shoveled into the ditch and troweled to a thickness of 15 cm. The thickness may be controlled by driving short lengths of scrap rebar into the ground, leaving 15 cm protruding. The concrete should be troweled to the tops of the rebars. The concrete lining should be finished with a wooden float to a smooth surface.

- The lining should be covered with empty concrete sacks or other material and brambles and kept moist for seven days.

MATERIAL FOR ONE DITCH LINED WITH CONCRETE

(Concrete lining is not necessary on impermeable ground.)

4 sacks of cement
12 sacks of sand
24 sacks of gravel
water
1 piece of wood - 5 cm x 10 cm x 260 cm (straight-edge)
5 pieces of wood - 2.5 cm x 5 cm x 100 cm

EQUIPMENT FOR ONE DITCH

2 pointed shovels
1 bucket
1 hammer
1 carpenter's level about 1 meter long (if not available, use a hose about 1 meter long)
1 mixing pad
1 wheelbarrow
1 one-cubic-meter measuring box
3 trowels

CONSTRUCTION OF DRAINAGE DITCH

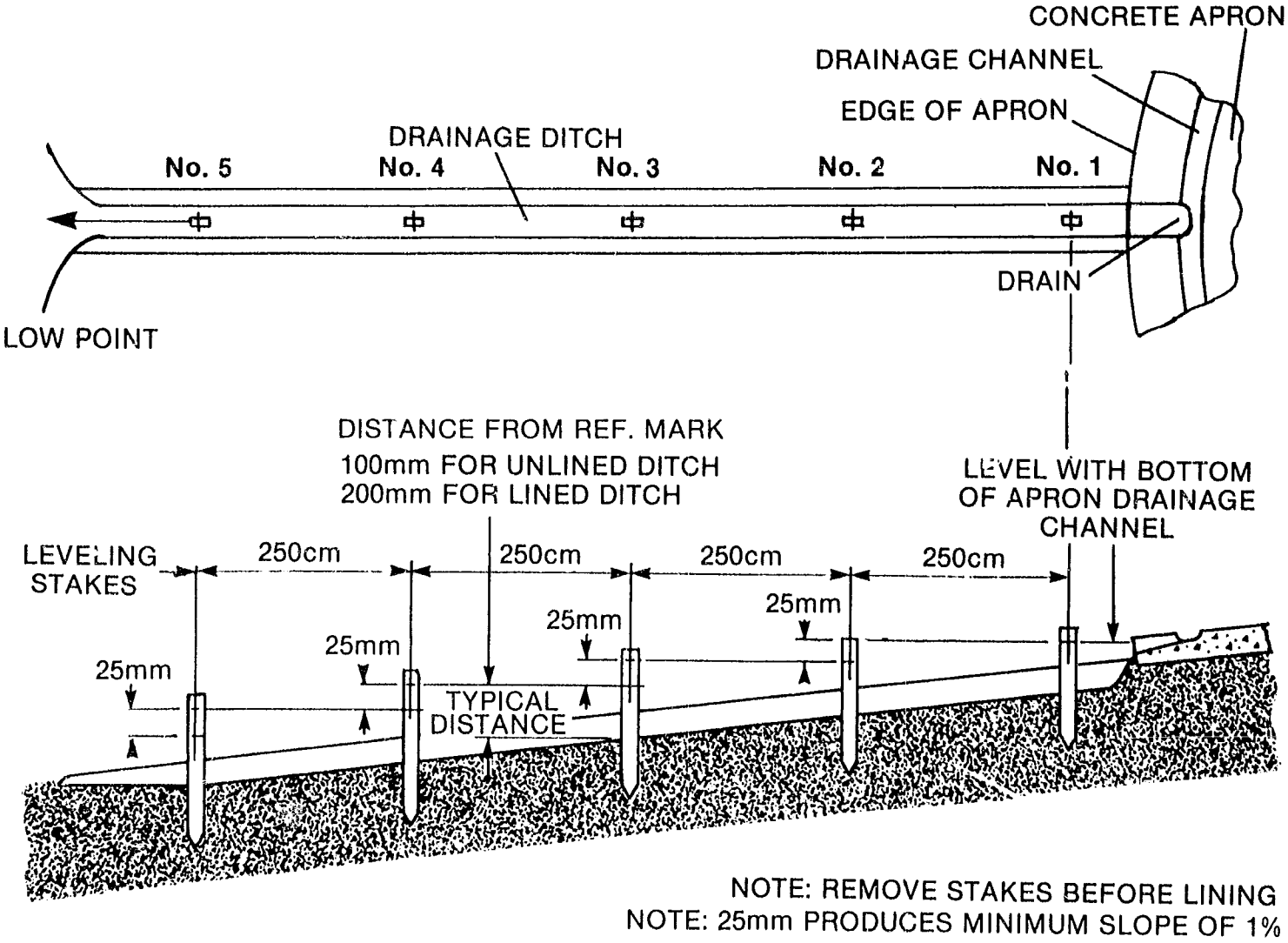

NOTE: REMOVE STAKES BEFORE LINING
NOTE: 25mm PRODUCES MINIMUM SLOPE OF 1%

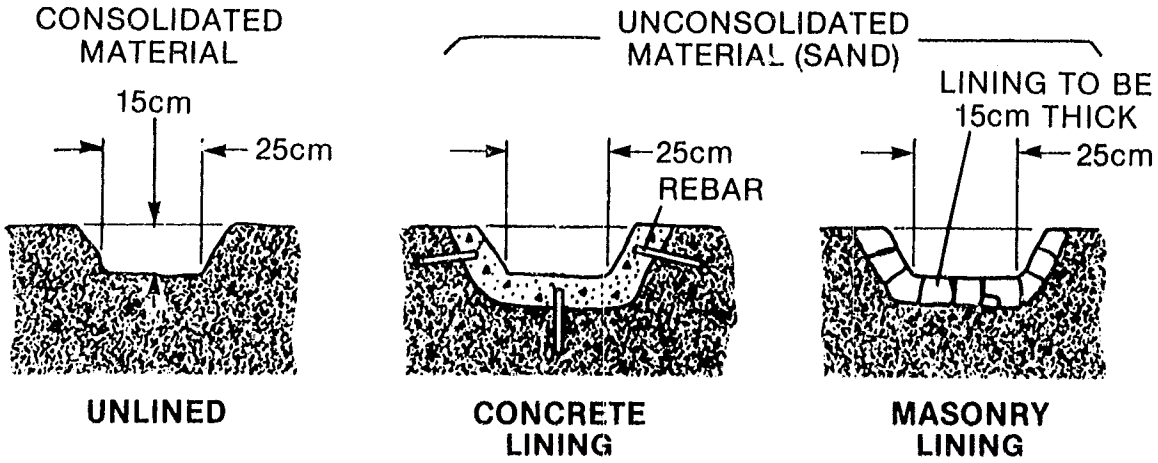

ALTERNATIVE DITCH CROSS SECTIONS

GUIDE TO SESSION 16: PROJECT COMPLETION

Total Time: 8 hours 45 minutes

SUBJECT	PROCEDURE	TIME	HANDOUTS/MATERIALS	FLIPCHART REQUIRED
Overview	Trainer presentation	5 minutes		
Completion and Clean-up	Discussion and lecturette	40 minutes	Handout 16-1: Well Clean-Up and Disinfection Steps Handout 16-2: Water for the World: Disinfecting Wells	
Preparation for Fieldwork	Trainer presentation	15 minutes	Trainer-prepared instructions for installing a water-lifting device	
Installing the Water Lifting Device and Disinfecting the Well	Fieldwork	4 hours		
Clean-Up - Project Completion	Fieldwork	30 minutes		
Review of Fieldwork	Discussion	15 minutes		
Develop a Maintenance Plan	Small group activity	30 minutes		
Maintenance plan	Group reports	20 minutes		
Maintenance Plan Presentations	Practice session	40 minutes		
Community Meeting	Group presentations	1 hour		
Evaluation of Presentations	Group discussion	25 minutes		
Closure	Trainer presentation	5 minutes		

SESSION 16: Project Completion

Total Time: 8 hours 45 minutes

OBJECTIVES

At the end of this session, the participants will be able to

- install appropriate water lifting devices for improved wells,
- disinfect a well,
- complete clean-up and other closing steps for a construction project, and
- prepare and present a maintenance plan.

OVERVIEW

This session has allotted three hours to install the selected water-lifting device. Since the type of device to be installed will vary, there are no trainer or participant instructions for this installation. The specific details and timing must be worked out in advance by the trainer. If no water lifting device is available to be installed, the total time for the session will be reduced.

The two mandatory field tasks for this session are well-disinfection (one hour) and project clean-up and completion, including development and presentation of a maintenance plan for the users (one hour).

PLANNING NOTE FOR TRAINERS: Prepare instructions in advance for installing the water lifting device. These may be reproduced and distributed to the participants as Handout 16-3. Also, the community meeting must be arranged for. The time necessary for the community meeting is not included in the time given for the session. Ideally, community meetings should be scheduled for the evening, but local customs may dictate the precise time.

PROCEDURES

1. Overview of Objectives and Activities **Time:** 5 minutes

   Share session goals and provide overview of activities. Point out that this session includes five tasks to be done during this session:

   - Install a water lifting device.
   - Disinfect the well.

- Carry out clean-up activities.
- Develop a maintenance plan for users.
- Present the maintenance plan at a community meeting.

2. Completion and Clean-Up - Discussion and Lecturette **Time:** 40 minutes

Discuss the importance of proper clean-up and completion. Ask participants what problems can occur if the clean-up and completion tasks are not finished by the construction team. Discuss their responses briefly. Be sure these include

- contaminated water
- safety hazards from tools and materials.

Introduce the topic of water disinfection and the need to periodically disinfect an open well. As discussed in Session 13 (User Education), maintaining the quality of the well water is an important aspect of any follow-up and maintenance plan.

Using Handouts 16-1: Well Clean-Up and Disinfection Steps and Handout 16-2: Water for the World: Disinfecting Wells, prepare a short lecturette on

- the reasons for disinfecting a well,
- the precautions to take while disinfecting a well, and
- ways to educate users about periodic disinfection.

The following points should be made in the lecturette:

- Wells are disinfected so that the water is safe and potable.
- Wells should be disinfected at regular intervals (at a minimum four times a year) and also
  - after any type of construction and
  - during and after the rainy season.

Pass out Handouts 16-1 and 16-2. Tell the participants that there is some duplication in the handouts, but that Handout 16-2 offers a specific method for calculating the amount of disinfectant needed. Review this calculation, following the directions on pages 1, 2 and 3 to determine the amount of disinfecting compounds needed for this well.

3. Preparation for Fieldwork **Time:** 15 minutes

Remind the group that there are two field tasks: installing a water lifting device and well disinfection. Handout 16-1 describes the well disinfection task.

How long installing the water lifting device will take depends on the type of device to be installed. If it will not take much time, all teams might work together on it. Alternatively, the tasks might be divided up so that some teams begin the disinfection tasks while others install the water lifting device. In organizing the work, be sure that all teams are sufficiently involved in each task to learn the essential principles and be able to replicate the tasks back home.

Hand out the instructions for installing the water lifting device that you developed prior to this session. Review these instructions and answer questions as needed.

4. Installing the Water Lifting Device and Disinfecting the Well - Fieldwork **Time:** 4 hours

Have participants go to the field and begin the fieldwork. Take a lunch break when appropriate.

5. Clean-Up - Project Completion **Time:** 30 minutes

After the participants have completed all the work on the well, remind them of the importance of clean-up activities. Instruct them to

- clean up all debris, materials, and supplies from the construction site until the area is clean and
- store all materials and supplies in a safe place.

It is important that the participants complete the project, since this provides a real sense of accomplishment and helps close this aspect of the fieldwork. Upon completion of the fieldwork, return to the classroom.

6. Review of Fieldwork - Discussion **Time:** 15 minutes

Lead a general discussion in which participants are invited to report on the day's fieldwork. Ask if there were any problems or significant learnings.

7. Develop a Maintenance Plan - Small Group Activity **Time:** 30 minutes

Discuss the need for a maintenance plan and emphasize the importance of involving the users in developing the plan.

A maintenance plan should include such tasks as

- keeping the area around the well clear of debris, stagnant water, etc.,
- making sure that animals are kept out and that well water is being used for drinking only,
- periodically disinfecting the well water,
- collecting a small amount of money for any needed repairs or maintenance activities.

Point out that not only do tasks and required resources need to be identified, but also it must be determined who will take responsibility for the tasks and when they will be carried out.

Ask if there are other maintenance tasks.

Have the construction teams from each well site meet together for 20 minutes to develop a maintenance plan for their respective wells. Indicate that these plans will be discussed with the community members at a meeting scheduled for the evening.

8. Maintenance Plan - Group Reports **Time:** 20 minutes

Have each construction team report on its respective maintenance plan. Evaluate each plan, discussing its strong points and indicating where improvements might be made. Encourage the use of visual aids.

Remind the group that they will present both plans at the community meeting. If the well sites are in two different communities, it may be necessary to have two meetings.

9. Maintenance Plan Presentation - Group Preparation **Time:** 40 minutes

Have the participants decide among themselves how the presentation should be given at the community meeting. The presentation should cover two main subjects:

- a report on the improvements completed for each well and
- a summary of the maintenance plan for each well.

It is important that agreement be reached with the community as to their responsibilities in the plan.

10. Community Meeting **Time:** 1 hour

A local official should open the meeting, introduce the participants, and allow them to make their presentations. Allow time for questions and discussions of the maintenance plan. Close the meeting.

The training session continues the following day.

11. Evaluation of Presentations **Time:** 25 minutes

Ask the participants how they feel their presentations went. How did this meeting compare to the initial community meeting? What went well? What might they change in the future?

12. Closure: Review this Session and Link to the Next **Time:** 5 minutes

Tell participants that in the next session there will be an opportunity to synthesize what was learned during all the construction phases and begin to plan how to use the information back home.

MATERIALS

Handout 16-1: Well Clean-Up and Disinfection Steps
Handout 16-2: Water for the World: Disinfecting Wells

WELL CLEAN-UP AND DISINFECTION STEPS

1. Be sure the area around the protected well is left clean and free of construction debris. Dispose of excess materials either by destroying them or by turning them over to the village committee. Absolutely none of these materials should be thrown into the well.

2. If any construction debris has fallen into the well, make an attempt to fish it out. Use a hook made out of scrap rebar fastened to the end of a piece of rope for the larger pieces of debris and a bucket on the end of a rope for the smaller pieces.

3. Calculate the amount of disinfectant required for the well (see Handout 16-2).

4. Measure the required amount into a bucket.

5. If powdered chlorine disinfectant compound is to be used, dissolve it in a bucket of water before adding it to the well. It is important that the solution be prepared in a clean container and mixed with clean utensils. Dirt, grease, oil and organic matter will reduce the strength of the chlorine solution. Avoid the use of metal containers because the strong chlorine solution will cause them to rust. Instead, use plastic, ceramic, glass, or rubber-lined containers.

6. Slowly pour the required amount of disinfectant, as determined above, into the well. Allow the disinfectant to wash down the sides of the well. Use a brush to spread it on the walls of dug wells.

7. Stir the water in the well to make sure the disinfectant is thoroughly distributed.

8. Place conspicuous signs on the well warning people not to use the water for 24 hours. Place brambles over the well opening to prevent people from using the water until it is safe to drink.

9. Remove any left-over disinfectant and all containers used to mix it.

10. Wash and return whatever equipment was borrowed.

MATERIAL FOR ONE WELL

_____ liters or grams of disinfecting material depending on the material available.

water as required

EQUIPMENT FOR ONE WELL

1 milliliter measuring cup or flask

1 balance (to be borrowed, not purchased)

1 bucket

1 stirring rod or stick

10 meters of rope

Water for the World

Disinfecting Wells

Technical Note No. RWS. 2.C.9

Disinfecting a well is necessary to eliminate the contamination that was introduced by equipment, materials, or surface drainage during construction or repairs. A chlorine compound is generally used for the disinfectant. Disinfecting a well involves calculating the required amount of chlorine compound, mixing a chlorine solution, and applying the solution to the well.

This technical note describes how to disinfect a well. Read the entire technical note before beginning the disinfection process.

Useful Definitions

AQUIFER - A water-saturated geologic zone that will yield water to springs and wells.

AVAILABLE CHLORINE - The amount of chlorine present in a chemical compound.

DISINFECTION - Destruction of harmful microorganisms present in water, through physical (such as boiling) or chemical (such as chlorination) means.

Materials Needed

To disinfect a well, you will need:

Chlorine compound such as calcium hypochlorite, bleaching powder, or liquid bleach,

Mixing container which should be rubber-lined or made from crockery or glass,

Stiff broom with a long handle, for hand dug wells,

Length of rope,

Length of perforated pipe, 0.5-1.0m long, 50-100mm in diameter, for deep-drilled wells with a high water table.

Caution!

Chlorine compounds or solutions may irritate skin and eyes upon contact. If possible, wear gloves, protective clothing, and glasses when handling chlorine. If you get chlorine on your skin or in your eyes, immediately wash it off with water.

General Information

The most easily obtainable and safest disinfectants are chlorine compounds. These compounds have various amounts of available chlorine, that is, chlorine that can be released to disinfect the water.

Calcium hypochlorite, also knows as high-test hypochlorite or HTH, has 70 percent available chlorine. It is produced as powder, granules, or tablets. Bleaching powders have 25-35 percent available chlorine. Common household laundry bleach, such as Clorox and Purex, has about 5 percent available chlorine.

Chlorine compounds should be stored in their original containers in a cool, dark place.

Calculating the Amount of Compound Needed

To disinfect a well properly, make a mix of available chlorine and water from the well in a ratio of 100 parts per million, ppm. To illustrate: 1 ml per 1000 liters equals 1 ppm; 100ml per 1000 liters equals 100ppm.

Table 1 shows the amounts of HTH, bleaching powder, and chlorine bleach that must be added to various volumes of well water to produce 100ppm of available chlorine. Before you can use the table, you must calculate the volume of water in the well.

The volume of water in a well equals the radius of the well squared times the depth of the water in the well times 3.1416.

$$V = r^2 \times D \times 3.1416$$

The radius, r, equals the diameter, d, of the well divided by two.

$$r = \frac{d}{2}$$

The diameter, d, can be measured directly or read from design drawings or from the driller's log described in "Maintaining Well Logs," RWS.2.C.6.

The depth, d, of the water in the well can be measured directly by lowering a rock tied to a length of twine to the bottom of the well, retrieving the twine, and measuring the wet portion. Or, it can be read from the driller's log.

For example, suppose the diameter of the well is 100mm (0.10m) and the depth of the water in the well is 12m. First, calculate the radius.

$$r = \frac{d}{2} \qquad r = \frac{0.10m}{2} \qquad r = 0.05m$$

Then calculate the volume of water.

$$V = r^2 \times D \times 3.1416$$
$$V = 0.05m \times 0.05m \times 12m \times 3.1416$$
$$V = \text{about } 0.1m^3$$

See Worksheet A Lines 1-4.

From Table 1, you can see that in order to disinfect this well you would need to use 0.2 liters of chlorine bleach, 5 percent available chlorine, or 33 grams of bleaching powder, 30 percent available chlorine, or 14 grams of high-test hypochlorite, 70 percent available chlorine.

For another example, suppose the diameter of the well is 1.2m and the depth of the water in the well is 2.6m. The radius equals the diameter divided by two $= \frac{1.2m}{2} = 0.6m$ Now calculate the volume.

$$V = r^2 \times D \times 3.1416$$
$$V = 0.6 \times 0.6 \times 2.6 \times 3.1416$$
$$V = 2.9m^3$$

See Worksheet A, Lines 5-8.

From Table 1, you can see that the nearest volume to this is $3.0m^3$, so to disinfect this well you would need to mix in 6.0 liters of chlorine bleach, or 1010 grams of bleaching powder, or 433 grams of HTH.

Table 1. Amounts of Chlorine Compounds for Well Disinfection

Water in Well (m^3)	Liquid Bleach 5% available chlorine (liters)	Bleaching Powder 30% available chlorine (grams)	Calcium Hypochlorite (HTH) 70% available chlorine (grams)
0.1	0.2	33	14
0.12	0.24	40	17
0.15	0.3	51	22
0.2	0.4	68	29
0.25	0.5	86	37
0.3	0.6	100	43
0.4	0.8	133	57
0.5	1.0	170	73
0.6	1.2	203	87
0.7	1.4	233	100
0.8	1.6	267	113
1.0	2.0	334	143
1.2	2.4	400	173
1.5	3.0	500	217
2.0	4.0	670	287
2.5	5.0	860	367
3.0	6.0	1010	433
4.0	8.0	1330	567
5	10	1700	730
6	12	2000	870
7	14	2300	1000
3	16	2600	1130
10	20	3390	1430
12	24	4000	1730
15	30	5000	2170
20	40	6700	2870

Worksheet A. Calculating the Volume of Water in a Well

Drilled Wells

1. Diameter of well = $\frac{(100\ \text{mm})}{(1000\text{mm/m})}$ = 0.10 m

2. Radius of well = $\frac{\text{Line 1}}{2}$ = $\frac{(0.10\ \text{m})}{2}$ = 0.05 m

3. Depth of water in well = 12 m

4. Volume of water in well = Line 2 x Line 2 x Line 3 x 3.1416 = 0.05 m x 0.05 m x 12 m x 3.14.6 = 0.09 m^3

Hand Dug Wells

5. Diameter of well = 1.2 m

6. Radius of well = $\frac{\text{Line 5}}{2}$ = $\frac{(1.2\ \text{m})}{2}$ = 0.6 m

7. Depth of water in well = 2.6 m

8. Volume of water in well = Line 6 x Line 7 x 3.1416 = 0.6 m x 0.6 m x 2.6 m x 3.1416 = 2.9 m^3

Mixing the Solution

Do not pour the chlorine compound directly into the well. It will not mix properly. First make a chlorine solution.

To make a chlorine solution from chlorine bleach, mix one part of bleach with one part of water, then pour the entire solution into the well. In the second example, this would mean mixing 6.0 liters of chlorine bleach with 6.0 liters of water and pouring 12.0 liters of chlorine solution into the well.

To make a chlorine solution with HTH or bleaching powder, first mix the compound with enough water to form a smooth paste, then mix the paste with water in the ratio of one liter of water per 15 grams of compound. To calculate the amount of water needed to make a chlorine solution, divide the amount of chlorine compound by 15. In the second example,

$\frac{\text{1010 grams of bleaching powder}}{\text{15 grams}}$ =

67 liters of water

$\frac{\text{433 grams of HTH}}{\text{15 grams}}$ = 29 liters of water

Mix the chlorine paste with the water for 10-15 minutes. Allow inert materials to settle and use only the clear chlorine solution. Discard the rest. Pour the clear chlorine solution, about 67 liters in the case of bleaching powder or about 29 liters in the case of HTH, into the well.

Do not mix chlorine solutions in metal containers. Mix them in clean containers that are rubber-lined or made from crockery or glass.

Disinfecting a Hand Dug Well

If the well has no cover, it should be disinfected every day, or as often as possible. If the well is covered it must be disinfected before the first use and every time it is opened for maintenance or repair.

For a dug well with pump and cover:

1. Prepare a chlorine solution to wash the inside of the well casing. Mix 10 liters of water with one of the following: 0.02 liters of chlorine bleach, or 3.3 grams of bleaching powder, or 1.4 grams of HTH.

2. Wash the exterior surface of the pump cylinder and drop pipe with the chlorine solution before they are lowered into the well.

3. Remove all equipment and materials that will not be a permanent part of the well.

4. Wash the inside surface of the well casing with a clean, stiff broom and the 10 liters of chlorine solution. See Figure 1.

5. Install the cover over the well.

6. Calculate the amount of chlorine solution needed to disinfect the well. Prepare the solution and poor it through the access hole in the cover, making sure that the solution covers as much of the surface of the water in the well as possible. See Figure 2.

7. Mix the chlorine solution with the water in the well by using a rope tied to a large, clean rock. Lower the rock into the well and move it up and down in the water.

8. Cover the access hole. Pump water from the well until you can smell chlorine.

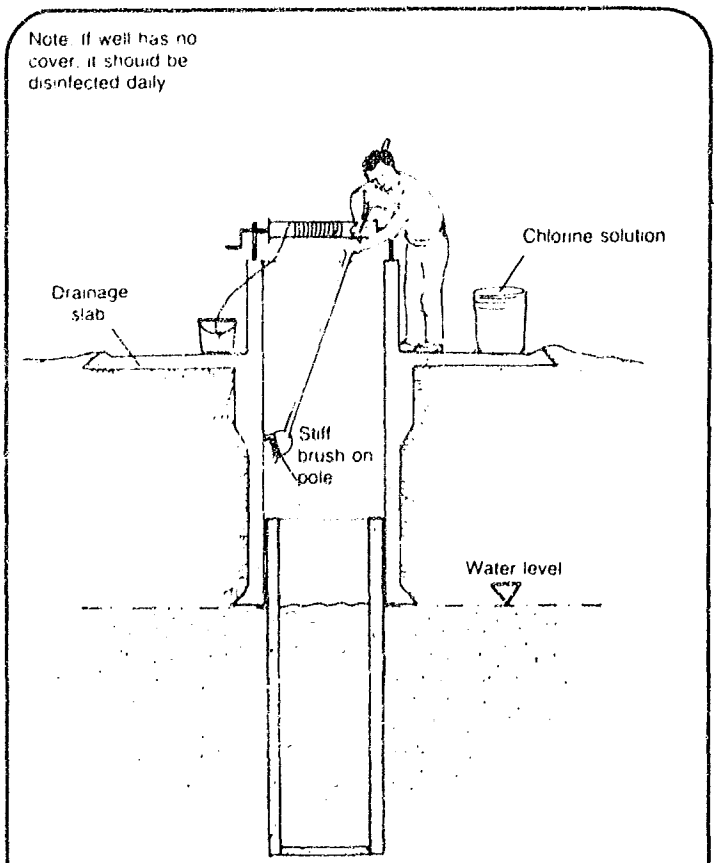

Figure 1. Washing Inside of Casing (Hand-dug well)

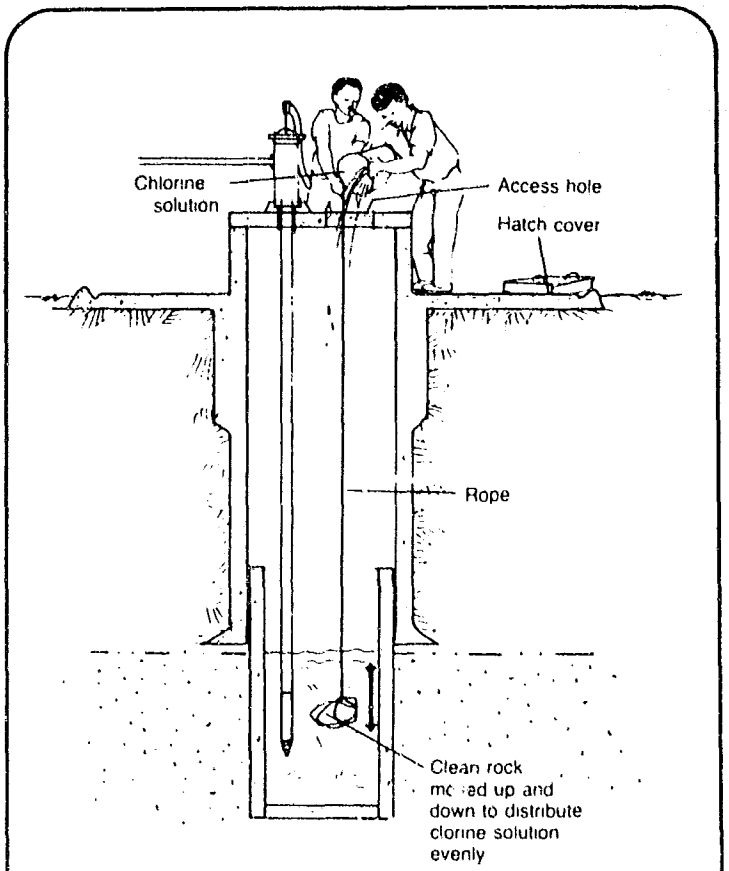

Figure 2. Pouring Chlorine Solution into Well

9. Allow the chlorine solution to remain in the well for 24 hours.

10. Pump water from the well until chlorine can no longer be smelled or tasted. Dispose of this water in a soakaway.

Disinfecting a Driven, Jetted, Bored, or Cable Tool Well

After the well has been tested for yield as described in "Testing the Yield of Wells," RWS.2.C.7, it must be disinfected before its first use and every time it is opened for maintenance or repair.

1. Remove the test pump from the well.

2. Calculate the amount of chlorine solution needed to disinfect the well. Prepare the solution and pour it into the well.

3. Mix the chlorine solution with the water in the well by using a rope tied to a clean rock. Lower the rock into the well and move it up and down in the water.

4. Add 40 liters of clean, chlorinated water to the well to force the solution into the aquifer. This solution can be made by mixing 40 liters of water with either one-half teaspoon of HTH or 20ml of chlorine bleach.

5. Prepare a chlorine solution to wash the pump cylinder and drop pipe. Mix 10 liters of water with one of the following: 0.02 liters of chlorine bleach, or 3.3 grams of bleaching powder, or 1.4 grams of HTH.

6. Wash the exterior surface of the pump cylinder and drop pipe as they are lowered into the well.

7. Pump water from the well until you can smell chlorine.

8. Allow the chlorine solution to remain in the well for 24 hours.

9. Pump water from the well until chlorine can no longer be smelled or tasted. Dispose of this water in a soakaway.

Deep Well with High Water Table

In the case of a deep well with a high water table, you need to take special steps to ensure that the chlorine and well water are properly mixed.

1. Drill a number of small holes through the sides of the pipe that is 0.5-1.0m long and 50-100mm in diameter. Cap one end of the pipe.

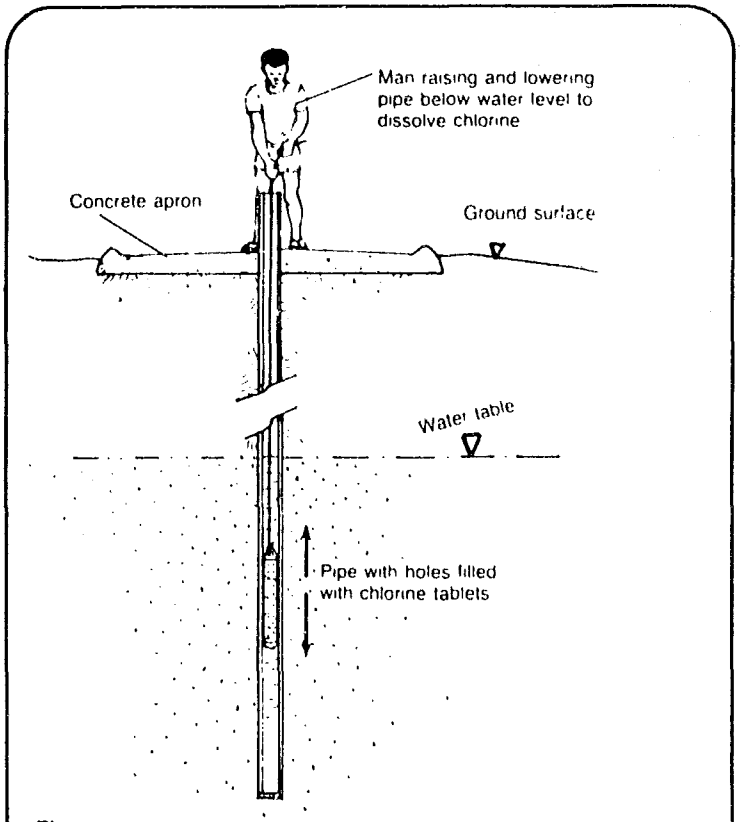

Figure 3. Disinfecting Deep Well with High Water Table

2. Pour the calculated amount of HTH granules or tablets into the pipe. Only HTH can be used in this method.

3. Fit the other end of the pipe with a threaded cap equipped with an eye loop.

4. Tie a rope to the eye loop, lower the pipe into the well, and alternately raise and lower the pipe in the water. Continue until the HTH has dissolved and the chlorine is distributed in the water. See Figure 3.

Handout 16-2, p. 6

Notes

GUIDE TO SESSION 17: EVALUATING THE WELL IMPROVEMENT PROJECT

Total Time: 3 hours

SUBJECT	PROCEDURE	TIME	HANDOUTS/MATERIALS	FLIPCHART REQUIRED
Overview	Trainer presentation	10 minutes		
Evaluating the Well Improvements	Small group activity	90 minutes	Handout 17-1: Project Evaluation Checklist	
Preparation of Evaluation Reports	Small group activity	20 minutes		
Presenting the Evaluation Reports	Small group reports	30 minutes		
Conclusions	Discussion	20 minutes		List of ideas on community involvement in evaluation
Closure	Trainer presentation	10 minutes		

SESSION 17: Evaluating the Well Improvement Project

Total Time: 3 hours

OBJECTIVES

By the end of this session the participants will be able to

- evaluate the strengths and weaknesses of the construction project and identify ways to improve future projects and
- describe simple, basic steps useful in initiating and evaluating well improvement projects.

OVERVIEW

This session moves the workshop into the last phase of the project cycle, monitoring and evaluation. Knowing how to monitor and evaluate a project is an important skill for extension workers. In this session the training group critically reviews all that has been done in the project. Elements in the project that worked successfully and areas of difficulty are identified. The group makes recommendations on how to improve subsequent well improvement efforts.

PROCEDURES

1. Overview of Objectives and Activities **Time:** 10 minutes

Point out that this session begins the evaluation phase of the project cycle. Be sure that the participants understand that this is not an evaluation of the workshop, but rather an important part of the project cycle. Explain that monitoring and evaluation can take place at several different points during the life of a project. At each point the evaluators are looking at different aspects.

Discuss the following questions:

- At what stage of the project cycle is our field project in right now?
- If we were to evaluate it at this point, what kinds of things would we look for?

Tell the participants that a checklist has been prepared that could be used to evaluate a project at this stage in the project cycle (construction phase completed and maintenance and follow-up phase about to begin).

2. Evaluating the Well Improvements - Field Exercise **Time:** 90 minutes

Distribute Handout 17-1: Project Evaluation Checklist. Go over the items on the checklist. Amplify or clarify points as needed. Ask for additions to the checklist.

Divide the participants into construction teams and ask each team to return to the field to inspect the other team's well and to complete these tasks.

- Respond to items 1-8 in Handout 17-1 for this well project. (Note: Items 9 and 10 do not need to be filled out for this workshop, but the entire checklist will be useful for the trainees in future project evaluations.)
- Identify elements of this project that are especially well done.
- Identify problems and make recommendations for how they could be solved.
- Prepare to share your analyses with the other group.

Give each team 50 minutes to complete the task in the field.

3. Preparation of Evaluation Reports **Time:** 20 minutes

Give each group 20 minutes to prepare a short report on its findings. The report should summarize the results of Handout 17-1: The Project Evaluation Checklist.

4. Presenting the Evaluation Reports **Time:** 30 minutes

Have each group give a short report on its findings.

5. Conclusions **Time:** 20 minutes

Ask the group how it could involve the community in monitoring and evaluating activities. Record the responses on a flipchart.

Ask the participants to comment on why they feel that it is useful to evaluate a recently completed project. Explain that evaluating a project at this stage (instead of waiting until it has been in operation for six months or a year) may provide some ideas about better ways of completing the first three phases of the project cycle.

Ask the participants what they might look for if they came back to this village six months from now. What kinds of questions would they add to this checklist? Write down the suggestions on a flipchart.

6. Closure - Review this Session and Link to the Next Time: 10 minutes

Ask the participants to spend a few minutes to write down their thoughts and ideas on how they will evaluate the well improvement projects they help initiate.

MATERIALS

1. Handout 17-1: Project Evaluation Checklist

PROJECT EVALUATION CHECKLIST

Name_____
Date_____
Village_____

1. How adequate does the water appear to be for domestic use?

2. How adequate is the foundation and headwall? How does it take into account the needs and desires of the users?

3. How solid and impermeable is the apron?

4. Comment on the adequacy of the materials used.

5. How would you rate the finished area in terms of aesthetics and usefulness?

6. How adequate is the drainage?

7. How has the well been protected from contamination and surface water?

8. How adequate and useful is the water lifting device?

9. What arrangements have been made for follow-up site maintenance?

10. What plans have been made for a user education strategy?

11. Other comments.

GUIDE TO SESSION 18: FIELDWORK REVIEW

Total Time: 3 hours

SUBJECT	PROCEDURE	TIME	HANDOUTS/MATERIALS	FLIPCHART REQUIRED
Overview	Trainer presentation	5 minutes		
Question-Answer Session on Fieldwork	Discussion	20 minutes		
Planning Skills	Small group activity	40 minutes		Construction activities Group task instructions
Review of Planning	Small group reports	20 minutes		
Analyze Learning: Construction Projects	Individual and small group activity	90 minutes	Handout 18-1: Project Learning worksheet	
Closure	Trainer presentation	5 minutes		

SESSION 18: Fieldwork Review

Total Time: 3 hours

OBJECTIVES

At the end of this session, the participants will be able to

- identify at least three important learnings from the field work and construction activities and
- identify elements of effective planning for construction tasks.

OVERVIEW

This session provides time for an in-depth analysis of what was learned from the fieldwork. This is a critical aspect of the training. It allows the participants to assess what they have learned from their construction work and begin to look at how they can apply it more broadly. This begins the process of community and back home planning.

PROCEDURES

1. Overview of Objectives and Activities **Time:** 5 minutes

   Share session objectives and provide overview. Be sure to stress the importance of taking the time to identify how to apply what was learned during the project.

2. Question-Answer Session on Fieldwork **Time:** 20 minutes

   Ask participants if there are any general questions or concerns from the fieldwork that are important to discuss at this point. Do not get side-tracked into minor questions or debates. It is important, however, to clear up any major issues or questions that have not been dealt with in prior sessions.

3. Planning Skills - Team Task **Time:** 40 minutes

   Tell participants that they will now look back over the entire construction process and review the methods and approaches used to plan each of the activities. List the following activities on a flipchart:

   - excavating and building foundation,
   - mixing and pouring the concrete blocks,
   - preparing and pouring the apron,
   - constructing the headwall,

- constructing the drainage ditch and appropriate water lifting device, and

- disinfecting the well and cleaning up the site.

Ask the participants to think back to the construction process which began on Day 3 and the team planning of daily activities. Tell teams to review their own planning process and evaluate its effectiveness. Review the planning process discussed on Day 1.

Have the participants work for 35 minutes in their construction teams. Write the following task for each team on a flipchart:

- Compare the planning for fieldwork with what actually happened during the construction activities.

- Identify the most effective and least effective aspects of the team's planning process and its teamwork.

- Organize the information on a flipchart so it can be shared with the other participants.

4. Review of Planning - Group Activity **Time:** 20 minutes

Ask each group to report to the full group. Ask the participants what they have learned about planning that would help them to assist communities to plan realistically.

5. Analyze Learning: Construction Projects **Time:** 90 minutes

Tell the participants that the next activity is to step back and review what was learned during the construction projects and how each individual might apply it in his or her work. Go back over the list of construction activities.

Emphasize that before moving on to the next session it is important to review and summarize the important learnings from the construction project and give each person a chance to put these into perspective for him or herself. Tell the participants that the next hour and a half will be spent on the tasks listed below. Make sure that the instructions are posted and that you keep track of time and move the groups from one task to the next as appropriate.

A. Step One (20 minutes): Ask each individual to take 20 minutes to fill out Handout 18-1: Project Learning Worksheet. Tell participants this is for their own individual use and they do not have to share any of it unless they want to.

B. Step Two (30 minutes): Divide the participants into construction teams for a discussion of what each person learned. Discuss the potential application of these learnings back home.

C. Step Three (10 minutes): In the total group, ask for volunteers to share what significant things they learned during the construction project.

6. Closure: Review this Session and Link to the Next **Time:** 5 minutes

Discuss the overall success of the construction project. Point out that the success of the fieldwork is evident in and how the significant improvements the participants have made in the sanitary conditions of the well. Be sure participants feel a sense of accomplishment and have an understanding of how to take these accomplishments back to their own communities.

MATERIALS

Handout 18-1: Project Learning Worksheet

PROJECT LEARNING WORKSHEET

The three most important things I learned during this project were:

Three things I would do differently next time are:

As a member of a construction team, I was effective when:

As a team member, I was not effective in the following circumstances:

GUIDE TO SESSION 19: BACK-HOME PLANNING

Total Time: 2 hours 30 minutes

SUBJECT	PROCEDURE	TIME	HANDOUTS/MATERIALS	FLIPCHART REQUIRED
Overview	Trainer presentation	5 minutes		
Reviewing Notes and Handouts	Individual activity	20 minutes		
Unresolved Questions	Discussion	25 minutes		
Introduction to Preparing a Work Plan	Trainer presentation	10 minutes		
Preparation of Work Plan	Individual activity	40 minutes	Handout 19-1: My Work Plans	Individual task instructions
Goals and Plans	Paired discussion	20 minutes		Questions on plans
Goals and Plans	Discussion	20 minutes		
Closure	Trainer presentation	10 minutes		

SESSION 19: Back-Home Planning

Total Time: 2 hours 30 minutes

OBJECTIVES

By the end of this session, the participants will have

- developed a plan for implementing a well improvement project and
- identified in detail the goals and activities for the first two months of the plan.

OVERVIEW

This session is intended to help the participants plan how they will apply what they have learned during the workshop to a well improvement project in a local community. Throughout the workshop the participants reflected on how they could apply the skills and knowledge they were attaining to their first project. During this session the participants begin to work out the details of a back-home plan. So far a good deal of time has been spent working on the technical skills and knowledge needed to improve a well. Equally important are the skills and knowledge required to plan and carry out a sanitary well project with full community involvement.

PROCEDURES

1. Overview of Objectives and Activities — **Time:** 5 minutes

   Give the group the information in the overview and state the objectives.

2. Reviewing Notes and Handouts - Individual Activity — **Time:** 20 Minutes

   Give the participants 20 to 30 minutes to work on their own to review their notes and check through their handouts. They should write down any concerns they have or any unresolved questions. Reintroduce the project cycle from Session 3 and point out that they now need to plan to implement these activities back home.

3. Unresolved Questions - Group Discussion — **Time:** 25 minutes

   At the end of the time spent on individual reflection and review, ask the participants what they identified as concerns and unresolved questions. Lead a discussion for the next 20 minutes based on answers and strategies for resolving these issues.

4. Introduction to Preparing a Work Plan **Time:** 10 minutes

Introduce the topic of planning back home. Explain how difficult it can be after a workshop to go back home and want to change something or improve a project without a clear plan of what needs to be changed and how to go about doing it.

Introduce the idea of using a personal work plan as the mechanism to organize, schedule, and coordinate resources and activities necessary for timely and successful development of a project. Ask the participants to determine which of the villages they work with is ready to support a sanitary well improvement project.

5. Preparation of Work Plan - Individual Task **Time:** 40 minutes

Ask the participants to develop a work plan for one of the villages they work with. Pass out Handout 19-1: My Work Plans. Review the plan format and give examples of goal statements.

Using Handout 19-1, write the following task on a flipchart and explain.

- Set clear and specific goals.
- Identify the activities you would undertake during the next two months to achieve these goals.
- How long would you estimate each activity to take?
- In what order would you schedule these activities so that events are coordinated effectively?
- Take 35 minutes.

6. Goals and Plans - Paired Discussion **Time:** 20 minutes

At the end of the 40 minutes, have each participant pick a partner with whom to discuss these goals and plans. Urge them to offer comments and suggestions to help make the plans as realistic as possible. Give them 20 minutes for this joint discussion.

Put these examples of questions that the partners might ask each other on a flipchart.

- How clear are the goals?
- How will you know when you accomplish them?
- How much time can you devote to this project?
- How many trips can you make to the designated village?
- What resources are there in the village, both skills and materials?

- Who should know about this project, and who should be involved?

7. Goals and Plans - Group Discussion **Time:** 20 minutes

After the pairs have spent 20 minutes working together, lead a discussion of the following questions with the total group:

- What are some examples of activities you feel should occur in week one?
- Which activities did you feel would take the most time?
- What problems might you anticipate in scheduling these activities?
- How will you share your plan with your supervisor and with the community?

8. Closure: Review this Session and Link to the Next **Time:** 10 minutes

Engage the participants in a brief discussion about whether or not they feel the goals for this session have been achieved. Emphasize the importance of planning, and encourage them to continue working on this type of planning as a tool for managing their projects.

Tell the participants that after a brief break, they will evaluate the effectiveness of the workshop as a whole.

MATERIALS

Handout 19-1: My Work Plans

MY WORK PLANS

GOAL

ACTIVITIES TO BE DONE	WHEN	WHO IS RESPONSIBLE	RESOURCES REQUIRED

GUIDE TO SESSION 20: WORKSHOP EVALUATION AND CLOSURE

Total Time: 1 hour 15 minutes to 1 hour 45 minutes

SUBJECT	PROCEDURE	TIME	HANDOUTS/MATERIALS	FLIPCHART REQUIRED
Overview	Trainer presentation	5 minutes		
Workshop Evaluation	Individual activity	40 minutes	Handout 20-1: Well Improvement Workshop Evaluation Form	
Workshop Closure	Graduation ceremony	30-60 minutes		

SESSION 20: Workshop Evaluation and Closure

Total Time: 1 hour 15 minutes to 1 hour 45 minutes

OBJECTIVES

At the end of this session the participants will have

- evaluated the workshop and
- had the opportunity to provide closure on the workshop activities.

OVERVIEW

The workshop is concluded with an evaluation and a short closing ceremony.

PROCEDURES

1. Overview of Objectives and Activities **Time:** 5 minutes

   Share the session objectives and provide a short overview.

2. Workshop Evaluation **Time:** 40 minutes

   Tell the participants that it is important for the trainers to get feedback on the value and effectiveness of the workshop. Each participant will be asked to fill out an evaluation form. Inform the participants that it is not necessary for them to sign their names. The evaluation forms are meant to be anonymous. Distribute Handout 20-1: Well Improvement Workshop Evaluation Form to all participants. Quickly review its contents and make certain that everyone understands how it should be filled out. Allow 20 to 30 minutes for the evaluation to be completed. Be sure to collect all of the completed forms before moving on to the next section.

3. Workshop Closure **Time:** 30-60 minutes

   Any workshop should try to end on a high note. Within the context of local culture and conditions, the trainers should devise a short "graduation" ceremony. Diplomas or certificates of completion might be issued to all participants, and trainers and selected participants might make appropriate closing remarks. Often senior host-country nationals and sponsoring agency officials are asked to attend to confer a sense of importance to the workshop. The exact details of the closing session need to be worked out by the trainers.

MATERIALS

Handout 20-1: Well Improvement Workshop Evaluation Form

WELL IMPROVEMENT WORKSHOP EVALUATION FORM

(Please do not sign your name)

A. Goal Attainment

Please indicate the degree to which the following workshop goals were achieved by putting a circle around the appropriate number on the scale.

1. Explain the benefits of improving wells.

1	2	3	4	5
Not very well				Very well

2. Work with village leaders and groups to initiate, implement, and follow through with a sanitary improvement project for dug wells.

1	2	3	4	5
Not very well				Very well

3. Assist villages to assess the need for improving well conditions and identify the major categories of improvements.

1	2	3	4	5
Not very well				Very well

4. Fabricate and make use of concrete blocks.

1	2	3	4	5
Not very well				Very well

5. Mix and pour concrete with appropriate reinforcement.

1	2	3	4	5
Not very well				Very well

6. Design and construct a headwall.

1	2	3	4	5
Not very well				Very well

7. Design and construct a sloped apron with adequate backfill and an appropriate structure for draining water.

1	2	3	4	5
Not very well				Very well

8. Develop user education strategies demonstrating clean water storage and handling techniques and well maintenance and usage.

1	2	3	4	5
Not very well				Very well

9. Estimate and plan the type, quantity, and basic costs of material and labor needed for a proposed project.

1	2	3	4	5
Not very well				Very well

10. Describe the importance of a continuing well maintenance program.

1	2	3	4	5
Not very well				Very well

11. Recognize construction problems in existing wells and determine if a structure should be repaired or replaced.

1	2	3	4	5
Not very well				Very well

B. Workshop Feedback and Learning

Please answer the following questions as fully as possible so that the trainers can determine how effective the workshop was.

1. What was the most positive thing about this workshop? Explain.

2. What was the most negative? Explain.

3. What stands out as most important? Explain.

4. What have you learned that you did not know before? Explain.

C. Workshop Organization and Training

1. What do you have to say about the way the workshop was planned and carried out?

2. What can be done to improve similar workshops?

3. What specifically do you need to learn more about in order to promote and develop a successful well improvement project in the future?

4. What comments do you have about the trainers?

PARTICIPANT REFERENCE PACKET

WORKSHOP GOALS

At the end of the workshop, participants will be able to:

1. Explain the benefits of improving wells.
2. Work with village leaders and groups to initiate, implement, and follow through with a sanitary improvement project for dug wells.
3. Assist villages to assess the need for improving well conditions and identify the major categories of improvements.
4. Fabricate and make use of concrete blocks.
5. Mix and pour concrete with appropriate reinforcement.
6. Design and construct a headwall.
7. Design and construct a sloped apron with adequate backfill and an appropriate structure for draining water.
8. Develop user education strategies demonstrating clean water storage and handling techniques and well maintenance and usage.
9. Estimate and plan the type, quantity, and basic costs of material and labor needed for a proposed project.
10. Describe the importance of a continuing well maintenance program.
11. Recognize construction problems in existing wells and determine if a structure should be repaired or replaced.

WORKSHOP SCHEDULE

DAY 1	DAY 2	DAY 3	DAY 4	DAY 5	DAY 6	DAY 7
1. Workshop Introduction 2. Introduction to Well Improvement	4. Community Well Assessment	Continuation of 5 6. Preparing for Fieldwork	8. Build Foundation	10. Apron and Headwall Design 11. Preparation for Apron Pour	12. Mix and Pour Apron	
			LUNCH			
3. Project Cycle and Planning	5. Decision-Making and Community Involvement Community Meeting	7. Excavate for Foundation	9. Mix and Pour Concrete Blocks			

DAY 8	DAY 9	DAY 10	DAY 11	DAY 12	DAY 13	DAY 17
13. User Education	15. Headwall Construction and Drainage Ditch	16. Project Completion	Continuation of 16 17. Evaluating the Well Improvement Project	19. Back-Home Planning 20. Evaluation of the Workshop and Closure		
			LUNCH			
14. Cost Estimating and Planning		Community Meeting	18. Fieldwork Review			

EXISTING AND IMPROVED WELLS

TYPES OF WELL IMPROVEMENTS

Deepening or Widening a Well - The purpose of deepening or widening a well is to increase the yield of the well by increasing the water supply. Both of these improvements are technically difficult and require extensive safety precautions as they include working inside of the well.

Construction of a Concrete Headwall - The purpose of a headwall is to prevent dirt and debris from falling into the well and to keep animals and people away from the well water. A headwall also makes it more convenient to draw water from the well.

Construction of a Drainage Channel - The purpose of a drainage channel is to divert spilled and contaminated water away from the well. It also prevents dirty water from seeping back into the well.

Construction of an Apron around the Well - The purpose of an apron is to help drain spilled water away from the well, keep the surface area around the well clean, and prevent contaminated surface water from entering the well. The apron is sloped to drain water away from a well.

Build, Move, or Improve Drainage or a Soakaway Pit - A drainage pit is preferable to a soakaway pit. A drainage pit siphons dirty water away from the well. If it is not feasible to construct a drainage pit, a soakaway pit can be used to soak up the spilled water. It is preferable to drain water to a field some distance from the well.

Upgrade, Replace, or Install Lining for a Well - The purpose of lining a well is to prevent groundwater from seeping into it. Replacing or installing lining requires working inside the well and therefore appropriate safety precautions must be taken. It is usually unnecessary to line a well if it is in rock or solid ground.

Sanitary Seal of the Apron to the Headwall - The sanitary seal prevents spilled water from draining back into the well through the ground.

Installation or Improvement of a Water Lifting Device - A water lifting device facilitates drawing water, protects the headwall and rope from damage, and provides a way to draw water that is more sanitary than the use of individual devices.

Handpump - The purpose of a handpump is to cover and seal the well completely so the water cannot be contaminated by any outside sources. When a handpump is installed properly, water can be withdrawn only by using the handpump.

Disinfection of a Well - The purpose of well disinfection is to purify and clean the well water periodically. It should be done as part of the on-going maintenance of the well and after any type of construction work or improvements are completed.

Develop a Maintenance and Upkeep Schedule - The apron, headwall, and area around the well should be kept clean. This requires removing debris, keeping the area around the well free of standing water, and preventing animals from going into the area around the well. Upkeep includes checking the inside of the well for leaks, caving in of walls, etc.

SELF-ASSESSMENT INVENTORY

Circle one number for each item. This inventory will help to provide you with a baseline of your skills in carrying out well improvement projects.

	DO WELL (4)	DO OKAY (3)	DIFFICULT TO DO (2)	CAN'T DO (1)
A. INITIAL CONTACT WITH COMMUNITY LEADERS				
1. Meet and discuss well improvement with appropriate village leaders and well users, especially - past projects and reasons for success/failure, - current problems with wells, and - current practices regarding water.	4	3	2	1
2. As appropriate, get the village involved in collecting assessment data. Verify the need for upgrading wells in the village.	4	3	2	1
3. Conduct an inventory of existing wells.	4	3	2	1
4. Identify and discuss the potential benefits of a well improvement project in the village.	4	3	2	1
5. Begin to analyze the costs and determine the willingness and ability to pay of the community.	4	3	2	1
6. If appropriate, use existing groups or committees in the community to help organize and monitor the well improvement project.	4	3	2	1
7. Determine the most likely villages for initial projects based on - need, - interest, - leadership, and - technical difficulty.	4	3	2	1
8. Determine who owns the wells and who will benefit from and use them.	4	3	2	1

	DO WELL (4)	DO OKAY (3)	DIFFICULT TO DO (2)	CAN'T DO (1)
9. Help the community make a preliminary decision on whether or not to go ahead with a sanitary improvement project and to determine the overall scope of the project.	4	3	2	1
B. ASSESSMENT				
10. Conduct a technical assessment of the wells targeted for improvement. Find out the method of drawing water; depth, yield, and size of the well; depth to water; quality of the water; and number and type of users. Determine the condition of the lining, headwall, apron, and drainage canal.	4	3	2	1
11. Determine which wells can realistically be improved within the scope of this project, on the basis of the assessment and user preference.	4	3	2	1
12. In consultation with appropriate local users and community representatives, decide which of the wells will be improved.	4	3	2	1
13. Evaluate the consequences to the users of the temporary loss of water from the well being improved.	4	3	2	1
14. Assess the quality and quantity and costs of available resources (materials and labor) for implementing the proposed improvements.	4	3	2	1
15. Determine the availability of material and labor needed for the project.	4	3	2	1
16. Determine the categories and costs of material that must be obtained from outside areas.	4	3	2	1

	DO WELL (4)	DO OKAY (3)	DIFFICULT TO DO (2)	CAN'T DO (1)
C. DESIGN				
17. Identify specific types of improvements needed on individual wells (lining, headwall, apron, drainage canal). Obtain the concurrence of the users for the planned improvements.	4	3	2	1
18. Identify the most appropriate methods available for implementing designated improvements. Factors to consider are costs, types of available material, labor, and equipment, and user preference.	4	3	2	1
19. Develop drawings for the designated improvements.	4	3	2	1
20. List the equipment and materials needed to complete the improvements.	4	3	2	1
21. Assess the labor requirements for the improvements and the technical knowledge needed to accomplish the work.	4	3	2	1
22. Calculate the costs of equipment, material, and labor and discuss them with responsible community leaders.	4	3	2	1
23. Determine the sanitary requirements and discuss who will be responsible for follow-up maintenance of the improved wells.	4	3	2	1
D. PRE-CONSTRUCTION PLANNING				
24. Determine the financial arrangements, including local contributions and outside resources available as appropriate.	4	3	2	1
25. Arrange the logistics of hiring and mobilizing the work force.	4	3	2	1

	DO WELL (4)	DO OKAY (3)	DIFFICULT TO DO (2)	CAN'T DO (1)
26. Purchase, borrow, or construct the necessary tools, equipment, and materials for implementing the designated improvements.	4	3	2	1
27. Arrange for the transportation of the tools, equipment, and materials to the well sites(s).	4	3	2	1
28. Assign responsibility for securing tools and equipment.	4	3	2	1
29. Help users locate alternate sources of water during the construction phase if needed.	4	3	2	1
E. CONSTRUCTION (Based on Design)				
30. Mix and pour appropriate types of concrete.	4	3	2	1
31. Build concrete blocks (if used).	4	3	2	1
32. Construct or improve a concrete headwall.	4	3	2	1
33. Place backfill.	4	3	2	1
34. Pour an apron with a slope and runoff channel.	4	3	2	1
35. Construct a drainage ditch.	4	3	2	1
36. Conduct a well disinfection procedure after the headwall has been installed.	4	3	2	1
37. Construct an appropriate water-lifting device.	4	3	2	1
F. FOLLOW-UP MAINTENANCE				
38. In consultation with responsible local users, develop a plan for periodic disinfection of the well.	4	3	2	1

	DO WELL (4)	DO OKAY (3)	DIFFICULT TO DO (2)	CAN'T DO (1)
39. Determine who will be responsible locally for the ongoing monitoring of the condition of the well.	4	3	2	1
40. Inspect the improvements for construction flaws and educate the responsible persons on how to inspect the improvements in the future.	4	3	2	1
41. Plan for how flaws will be corrected now and in the future.	4	3	2	1
42. Develop appropriate user education sessions, demonstrating clean water handling and storage techniques.	4	3	2	1

THE PROJECT CYCLE

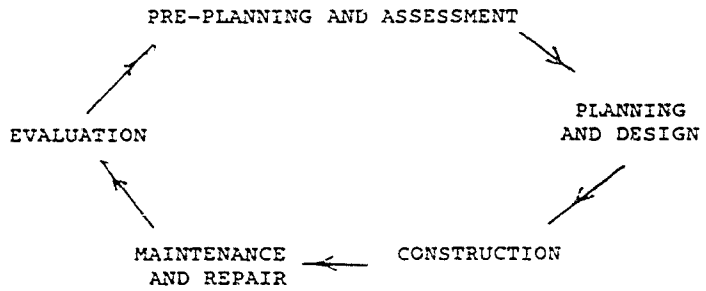

Pre-Planning and Assessment

- Meet and discuss well improvement with appropriate village leaders and well users.
- Conduct inventory of community wells to determine number of wells, general conditions and usage patterns, and overall quality and quantity of water.
- Identify and discuss potential benefits and general costs of a sanitary improvement project.
- Help community make a decision on whether to proceed with a sanitary improvement project.
- Identify with community the overall scope of the proposed project.

Planning and Design

- Conduct a technical assessment on the specific conditions of the wells targeted for improvement.
- Determine what type of improvements are needed (e.g., lining, headwall, drainage, etc.) and what type can realistically be implemented within the scope of this project.
- Design (including rough drawings) each proposed improvement.
- Determine equipment, material, and labor needs.
- Obtain user concurrence for planned improvements and make final decisions with community.
- Calculate and discuss costs.
- Develop work plan and schedule and arrange all logistics.

Construction (based on design)

- Mix and pour appropriate types of concrete.
- Build concrete blocks (if used).
- Excavate for foundation.
- Place concrete blocks.
- Prepare foundation for apron.
- Cut and assemble rebars.
- Construct or improve concrete headwall.
- Place backfill.
- Pour apron with slope and runoff channel.
- Construct drainage ditch.
- Conduct well disinfection procedure after headwall installation.
- Construct appropriate water lifting device.

Maintenance and Repair

- Develop with responsible local users a plan for periodic disinfection of the well.
- Determine who locally will be responsible for ongoing monitoring of the well condition.
- Inspect for construction flaws and educate responsible persons on how to inspect in the future.
- Plan for how such flaws will be corrected now and in the future.
- Develop appropriate user education sessions demonstrating clean water handling and storage techniques on improved well.

Evaluation

- Reflect on project with community noting any changes which should be made before beginning next well improvement project.
- Determine ways to integrate well improvement projects with other community health and sanitation programs.
- Identify future work for improving village water resources.

OVERALL ASSESSMENT OF COMMUNITY WELLS

Answering these questions will require both observation and talking to community members.

1. Types and Conditions of Wells

   A. Number of open dug wells in the village
   ___ in use ___ not currently in use

   B. Number of wells covered with handpumps
   ___ in use ___ not currently in use

   C. Describe the general sanitary conditions around the wells.

   D. Describe the general state of repair/disrepair of the wells in use.

   E. Describe the overall quality and quantity of water available.

2. Users and Uses

   Collect information and opinions on water use in the community. Interview a number of users and form your own opinion.

   A. What sources of water do people use in the community?

   B. What sources have the best water for drinking?

   C. What purposes other than drinking do people use water for? What do they use well water for?

   D. What do people use to collect water? E.g., a bucket?

   E. How do people store water in the home?

   F. Will users maintain and keep up the sanitary conditions around the wells and carry out periodic maintenance tasks?

G. Is there (or could there be) a community group able to oversee the continued maintenance of the improved wells?

3. Need for Improved Sanitation

A. What health problems are there which may relate to water?

B. Are open wells the main source of drinking water?

C. Are animals allowed to wander close to the well?

D. Are the wells adequately protected from animals and other sources of contamination?

4. Community Resources

A. What types of material are available?

___ lumber
___ tools
___ bricks
___ masonry stone
___ cement
___ sand
___ gravel

B. What types of laborers are available? How many?

___ semi-skilled
___ mason
___ carpenter

C. What type of transportation is available?

D. Are users willing and able to commit time and support to improvement projects?

TECHNICAL ASSESSMENT OF WELL CONDITIONS

Name or location of well _____

Fill out this form for each well inspected. Answering these questions requires mostly observation, except for Question 2.

1. What is the inside diameter (in centimeters) of the well?

2. Check the items which best describe the location of the well.

   A. On a hill ___; in a valley ___; in or near a wadi* ___ .

   B. Distance from privy, greater than 15 meters ___; less than 15 meters* ___ .

   Higher than privy ___; lower than privy* ___ .

   C. In village ___; in field ___; distance to village (in meters) ___ .

3. Well history (check appropriate responses). You will need to talk to some community members to answer questions 3A to 3G.

   A. Approximate age: ___ years.

   B. Built by: village ___; government agency ___; other ___ .

   C. Owned by: private ___; public with multiple use ___ .

   D. Estimated number of people depending on well for domestic use ___ .

   E. Usage: Domestic: for use in home ___; laundry near well ___ .

   Bathing near well ___ .

   Livestock near well ___ .

   Irrigation ___ .

   Abandoned* ___; why _____; when _____.

   F. Does the well go dry? Yes___; No___ .

   Every year? Yes ___; No ___ . If yes, when?

   Some years? Yes ___; No ___ .

   G. Is there enough water for all users (20 liters per person per day)? if no, how much do you estimate is available in liters per person per day?

   During wet season? _____; during dry season? _____.

4. Depth (in meters) from ground surface to water level ___; bottom of well ___ .

5. Estimated yield: _____ liters per day. (Base your answers on information provided by users.)

6. Quality of water: good ___; brackish (salty) ___; smelly ___ .

7. The well is open ___; partially covered ___.

8. Describe the methods of getting water: pump ___; bucket ___ .
   Is the rope protected? Yes ___; no ___.
   Is the bucket kept off the ground? Yes ___; no ___.
   (If yes, describe how.)

9. A. Is there an apron around the well? Yes ___; no ___.

   B. If yes, give the approximate size of the apron. _____ x _____.

   C.

Type of apron	Condition: Good	Condition: Needs Repair
___ Concrete	___	___
___ Masonry	___	___
___ Other (describe)	___	___

   If you checked "needs repair," describe conditions.

10. Is there a headwall for the well? Yes ___ ; no ___.

    If yes, give the approximate size of the headwall.

    C.

Type of headwall	Condition: Good	Condition: Needs Repair
___ Concrete	___	___
___ Masonry	___	___
___ Other (describe)	___	___

    If you checked "needs repair," describe conditions.

11. Is there a drainage ditch or channel carrying water away from the well?
    Yes ___; no ___.
    If yes,
    A. Is the ditch lined? Yes ___; no ___.
    B. What type of lining? _____
    C. What is the length (in meters) of the ditch? _____.
    D. Where is water drained? Open field_____;
    soakaway_____;
    other (describe)_____.

12. Is well lined? Yes ___; no ___.
    If yes, what material is used for lining? _____.
    Describe condition of lining _____.
    What is the thickness of the lining? _____.

13. Describe soil type at well:
    A. Ground surface: stable___; rocky___; unstable___.
    B. Walls of well: rocky____; stable____; unstable*_____.

14. Conditions around well. Check the appropriate descriptions.
    A. Free of standing water or muddy pools_____.
    B. Pools of standing water_____.
    C. Signs of animal droppings_____.
    D. Place for washing clothes_____; type_____; distance (in meters) from well _____.
    E. Place for watering animals_____; type_____; distance (in meters) from well _____.

15. Visible evidence of floating material in well_____; type_____.

METHODS FOR DETERMINING WATER DEPTH AND WELL YIELDS

Method for Measuring Depth to Water

(1) Acquire a string or thin (light) rope approximately 5 to 6 meters long to which a small weight (bolt, rock) can be securely tied at one end.

(2) Measure the rope and mark it off at intervals of 25 centimeters using small pieces of string, or colored paint, ball point pen, etc.

(3) Securely holding one end of the rope, drop the weighted end into the well until you hear the weight strike the water.

(4) Holding the rope against the top edge of the headwall (if there is one) or the surface of the ground, note the closest mark on the rope.

(5) Write this measurement to the closest quarter-meter mark on the inventory sheet for that well.

Method for Measuring Depth of Well

(6) Next, drop the weighted end of the rope into the water and play it out until it goes slack.

(7) Bounce (jiggle) the weighted end to make sure it has reached the bottom of the well and not just a ledge.

(8) If the same measurement is seen after several attempts, the bottom of well has been reached.

(9) Again holding the rope against the same point on the top edge of the headwall (if there is one) or the surface of the ground, note the closest quarter-meter mark on the rope.

(10) Write this measurement on the inventory sheet for that well.

Method for Determining Well Yield: The purpose of estimating the yield is to quantify the productivity of the well. This will help in deciding whether it is worth improving the well.

The simplest method for determining yield is to ask the well users if the well provides enough water for their families, especially in the dry season. An estimate of 20 liters per day per person is a generally accepted minimum, although it may be lower in some areas.

GUIDELINES FOR SELECTING WELLS TO IMPROVE

- Physical location: If the well is located in or near a stream or wadi or within 100 feet of a privy it cannot be improved by this type of sanitary improvement project, as the location is inappropriate.

- Well size: If the well is significantly less than 1.5 meters in diameter or more than 1.5 meters in diameter, improvements will probably be too difficult to implement or too costly to be feasible.

- Well usage: If the well dries up on a seasonal basis or has been abandoned, it probably needs work to increase the water yield, not sanitary improvements.

- Number of users: The well with the most users should be highest on the priority list.

- Condition of the area around the well: If the ground surface is obviously contaminated with standing pools of water and if cattle have easy access to the well area, then sanitary improvements are needed.

- Soil conditions at the well: A stable soil is necessary to sustain the foundation for the apron and headwall and also to prevent the walls from caving in.

- Attitude of users: For the project to be a success, users must cooperate in the protection of the well, particularly with labor and local materials, as well as financially.

Other guidelines may include:

- Village committee: It can be helpful for a village committee to coordinate the village participation. This may be a village health committee, a village development committee, or some other type of committee.

- Liaison between the village and the national or regional agency responsible for rural water supply and sanitation: Liaison will provide backstopping during the improvement and after the work is completed.

PROTECTION OF OPEN WELLS

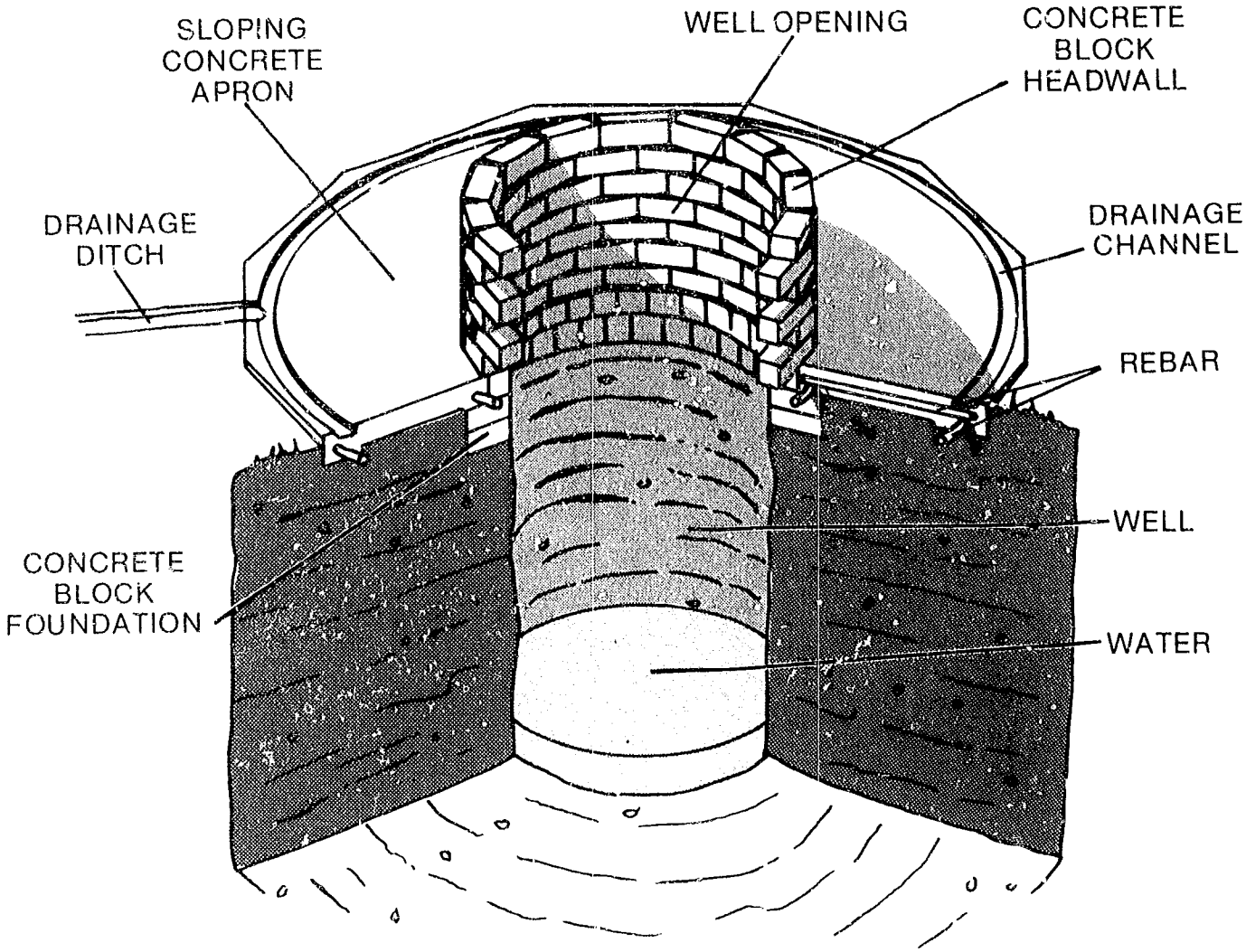

LIST OF TOOLS AND MATERIALS NEEDED

Materials needed	Tools needed for each team
cement	metric tape
sand	axe
gravel	carpenter's level
10 mm rebar	flat blade shovel
3 mm rebar	round blade shovel
tie wire	bucket
nails	hammer
wood	crowbar
rope	mixing pad
	wheelbarrow
	steel trowel
	bar cutter
	pliers
	plumb bob
	saw

GLOSSARY OF TERMS USED IN CONSTRUCTION

BERM: A narrow ridge to serve as a form for the outer edge of the concrete apron. A berm is made of a semi-dry mixture of cement and dirt and some water (1 part cement to 6 parts dirt free of vegetation).

CARPENTER'S LEVEL: A straight-edge piece of wood or metal usually about 1 meter long, with an insert containing a small bubble placed on top in the center. When the device is in a horizontal position, the bubble will be in the center of the insert if both ends are at the same level. A line drawn along the top or bottom of the device will be level.

CONCRETE MIX: A concrete mix is usually expressed as the parts of cement to sand and to stone. A 1:2:4 mix consists of 1 sack of cement (a cement sack holds about 25 liters or 1 cubic foot), 2 sacks of sand, and 4 sacks of gravel. Enough water is added to the mix to make a mass which can be worked into the forms but which is not soupy or runny. The total volume of the mix is somewhat less than the sum of the parts, as the cement and sand fill some of the spaces between the pieces of gravel. Depending on the size of the sand and gravel, the total volume of the 1:2:4 mix will probably be about five times the volume of the cement used.

FLOAT: A flat piece of wood or metal about 10 cm wide and 20 cm long, with a handle fastened to it. A float is used for the final finishing of a flat concrete surface after it has partially set but is still not hard. The worker moves the float on the concrete surface with a circular motion to draw moisture to the surface for a final finish. A metal float is used to obtain a smooth concrete surface. A wooden float is used to obtain a rather rough non-skid surface suitable for a concrete apron. (The apron would be slippery if it was finished with a metal float.)

FORMS: Forms are used to mold wet concrete to the shape desired. The forms may be made of wood, metal, or other materials. For this workshop, the forms for the concrete blocks will be made of wood, as it is easy to work with and generally available. For the apron, the top layer of concrete blocks in the foundation will serve as the inner form. A temporary berm of weak concrete made of cement and dirt will be used as the form for the outer edge of the apron.

MORTAR: A mixture of water, sand, and cement and/or lime. Mortar for this workshop will consist of 1 part cement and 3 parts of clean sand mixed with sufficient clean water to make a firm mortar mixture that will spread easily with a trowel but will not run. The mortar must adhere to the surface of the concrete blocks when applied with the trowel and stay in place between the vertical faces of the concrete blocks without running out.

PLUMB BOB: A weight attached to the end of a line used to indicate a vertical direction when hanging freely. All points on the line are vertically above the reference point at the lower end of the line.

POUR: When concrete is placed in a form it is called a concrete "pour" although it is usually shoveled into place or emptied from a wheelbarrow into the formed area.

REBAR: An abbreviation for "reinforcing steel bar" used in concrete structures to add tensile strength to concrete, which is strong when compressed but comparatively weak when pulled or bent. Rebars are often roughened on the surface to increase their bond with the concrete. Smooth bars may be used when the stress on the concrete is not too great.

SET: The chemicals in the cement react with the water and then the water begins to evaporate and the concrete hardens and is said to have set. As the moisture evaporates the concrete becomes stronger and, by the end of seven days, should have reached full strength. After one day it is strong enough to walk on but is still fragile and will crumble when struck on an edge. By the end of two days the concrete should be hard enough to walk on for constructing the headwall.

SCREED: A straight-edge piece (usually of wood) 5 cm x 10 cm or 5 cm x 15 cm for leveling and smoothing (screeding) recently poured concrete. The screed rests on two supports and is moved backward and forward over the fresh concrete surface.

TROWEL: A flat metal plate, triangular in shape, 15 or 20 cm long, with a handle fastened to it. The trowel is used for placing and working cement mortar in brick, concrete block, and masonry construction.

VIBRATE: Fresh concrete is vibrated after it is poured into place to assure that it fills all the spaces inside the form. To vibrate the concrete, the worker moves a shovel or flat stick up and down in the concrete after it has been poured. Sometimes mechanical vibrators are used, but they are expensive and require either a gasoline or electric motor to run them.

DETERMINING THE DIAMETER OF THE FOUNDATION CIRCLE

Establish two perpendicular diameters as shown in figure, by laying two sticks across the well so that they cross in the middle. Move the sticks around until they bisect each other. The point at which they bisect is the theoretical center of the well. The distance to the inside of the foundation wall will be measured from the center. With the sticks in this position, measure the diameters. Record dimensions A and B.

To calculate the diameter of the foundation circle, add the two diameters together and divide by two:

For example: 1.54 + 1.46 = 3.00 m
3.00 m ÷ 2 = 1.50 m

The radius will equal one-half the diameter: 1.50 m ÷ 2 = 0.75 m

Note: The theoretical diameter of 1.50 m will be used in the examples as the basis for calculations.

DETERMINING THE DIAMETER OF THE FOUNDATION CIRCLE

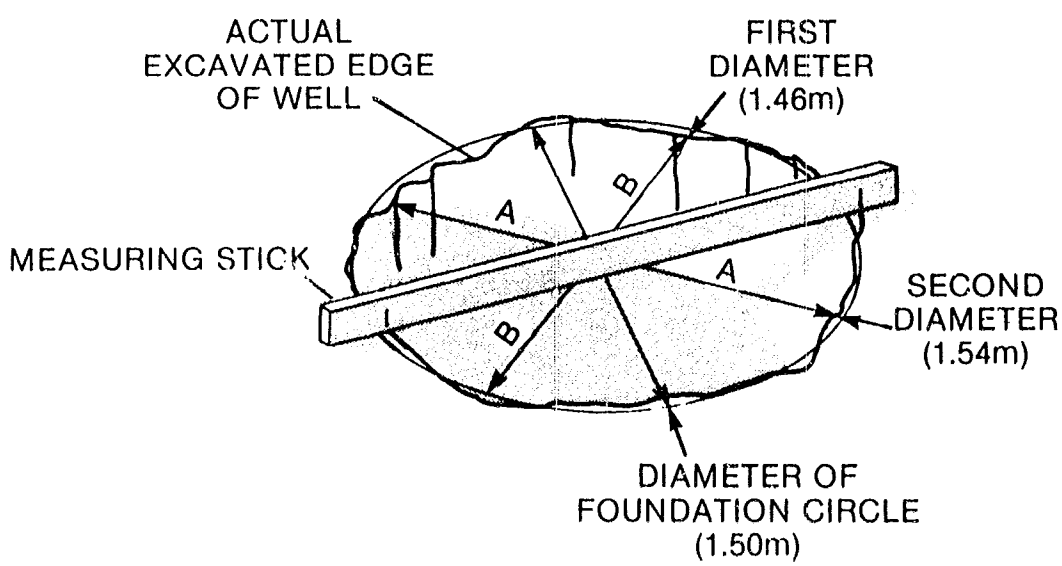

LOCATING THE WELL CENTER AND THE FOUNDATION LEDGE; EXCAVATING THE LEDGE

(Based on a well with a diameter of 1.5 meters)

Step 1: Rough grade the area around the well and establish an even, level surface.

Step 2: Set leveling support stakes 1, 2, 3, and 4. Refer to the figure on 7-2, page 3, to determine where to place the stakes.

Step 3: Measure up 13 cm from the level (rough grade) established in Step 1 and mark with a line on stake 1.

Step 4: With the long straight edge (5 cm x 10 cm x 270 cm) and the carpenter's level, mark stakes 2, 3, and 4 at the same level as stake 1. Then mark stakes 5, 6, 7, and 8.

Step 5: To make the centering cross, two pieces of wood measuring 5 cm x 10 cm x 270 cm will be needed along with a short piece measuring 2.5 cm x 5 cm x 30 cm for nailing the cross pieces together. One of the long pieces must be cut in the middle to make two pieces (5 cm x 10 cm x 135 cm). These will be butted against either side of the center of the other long piece and nailed to it using the short piece (see figure). Position the cross over the center of the well by making sure that dimensions A and B (from Handout 7-1) are duplicated. Once the cross is centered, nail the centering cross to stakes 1, 2, 3, and 4 at the level marks (13 cm in height).

Step 6: Tie a plumb bob line at the intersection of the two pieces of the centering cross (the center of the well).

Step 7: Measure in horizontally 1.20 m from the plumb bob line to determine the width of the ledge for the foundation blocks.

Step 8: Cut a measuring stick and measure down 47 cm from the bottom edge of the centering cross to determine the depth of the ledge. The ledge must be large enough to accommodate two layers of blocks and the mortar between them. (Based on concrete blocks measuring 15 cm x 20 cm x 40 cm.)

Step 9: Excavate the ledge carefully, throwing the dirt away from the well onto the apron area for use in fine grading that area. The bottom of the ledge must be level and the inner edge away from the well must be as vertical as possible.

Note: If the circumference of the well is very irregular, some of the foundation blocks may hang over the edge (see Session 8). Check the width of the foundation ledge to make sure that the first course of blocks does not hang over the edge. If there is more than 1 or 2 cm of overhang, the ledge

should be widened. However, this will increase the diameter of the foundation circle.

MATERIAL FOR ONE WELL

8 leveling stakes - 5 cm x 5 cm x 20 cm
2 centering cross pieces - 5 cm x 10 cm x 270 cm
1 short piece to nail cross together - 2.5 cm x 5 cm x 30 cm
4 measuring sticks - 2.5 cm x 5 cm x 50 cm
nails

EQUIPMENT FOR ONE WELL

1 metric tape
2 axes
2 hammers
2 carpenter's levels, about 1 meter long
2 round blade shovels
2 flat blade shovels

Note: There may be room enough for only one team to work on the excavation at a time.

DETERMINATION OF CENTER OF WELL & EXCAVATION FOR CONCRETE BLOCK FOUNDATION

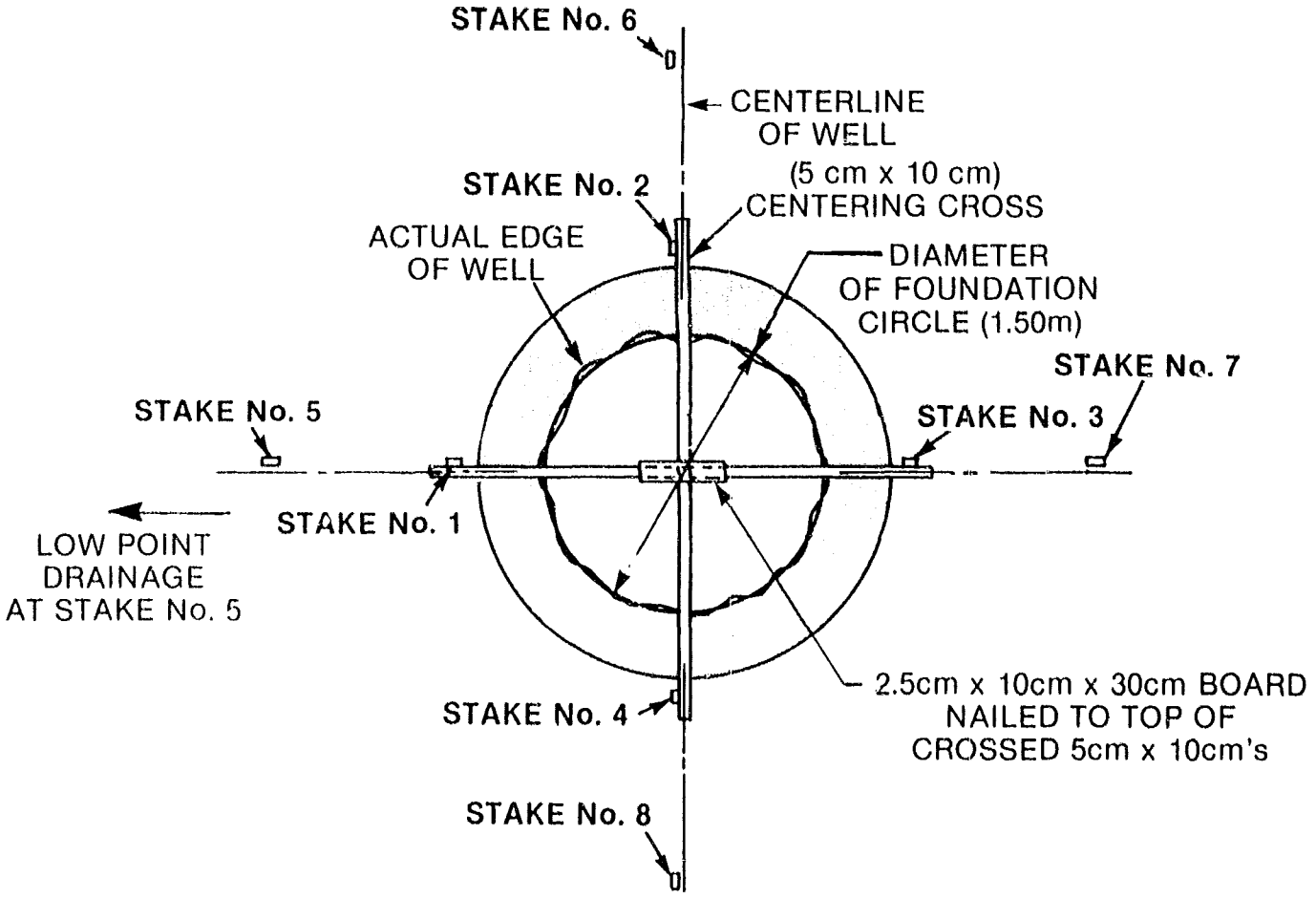

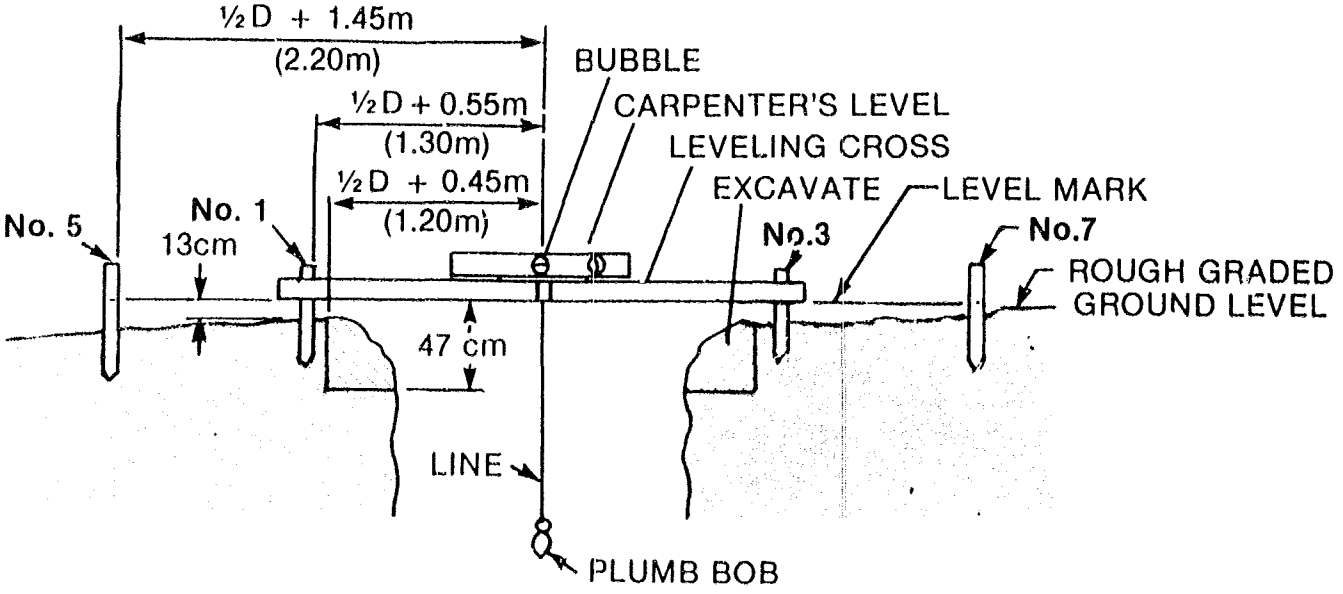

BASED ON CONCRETE BLOCK OF 15cm x 20cm x 40cm

PLACEMENT OF CONCRETE BLOCK FOUNDATION

(Based on a well with a 1.5 m diameter of 1.5 meters)

Step 1: Mix 28 liters of cement with 84 liters of clean sand (proportion 1:3). Add water until the mortar spreads easily with a trowel; it should not be runny or soupy.

Step 2: Sprinkle a light coat of sand on the ledge.

Step 3: Trowel 1 cm of mortar onto the ledge.

Step 4: Lay the first layer (course) of concrete block radially with the inner corners touching.

Step 5: Fill the spaces between the blocks and the space between the blocks and the vertical face of the ledge with mortar.

Step 6: Spread a bed of mortar 1.5 cm deep on top of the first layer of blocks.

Step 7: Place the second layer of blocks as shown in the figure, with the spaces between them over the center of the blocks in the first layer.

Step 8: Do not fill the spaces between the blocks of the second layer with mortar.

Step 9: Spread a bed of mortar 1.5 cm deep on the inner 20 cm of the surface of the second layer of blocks.

Step 10: Place the top layer of blocks as shown. Do not fill spaces between them. If a large gap exists between the blocks when the ring of blocks is closed, then it should be filled with mortar or a small block. A form for making small blocks is shown in Handout 9-3.

Step 11: Clean inner surface of the foundation, cover it, and keep it moist.

MATERIAL FOR ONE WELL

Based on a well with a diameter of 1.5 meters.)

57 concrete blocks - 15 cm x 20 cm x 40 cm

84 liters of clean sand (2 sacks)

1 sack of cement (additional material should be on hand in case more mortar is needed)

water as required

EQUIPMENT

1 cubic foot measuring box (28 liters)

1 plumb bob with 2 meters of string (a stone tied on the end of a string may be used as a plumb bob)

3 trowels

1 wheelbarrow or head pallet

mixing pad

1 bucket

2 shovels

1 metric measuring tape

PLACEMENT OF CONCRETE BLOCK FOUNDATION

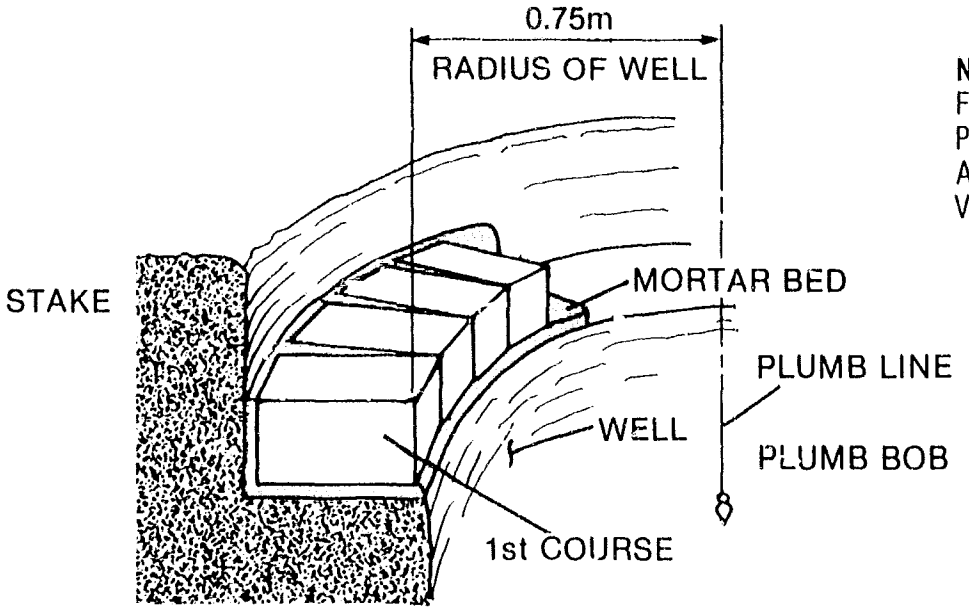

NOTE: USE PLUMB LINE ESTABLISED FOR EXCAVATING THE LEDGE TO POSITION THE CONCRETE BLOCKS IN A CIRCLE AT THE 0.75m RADIUS AND VERTICALLY IN LINE.

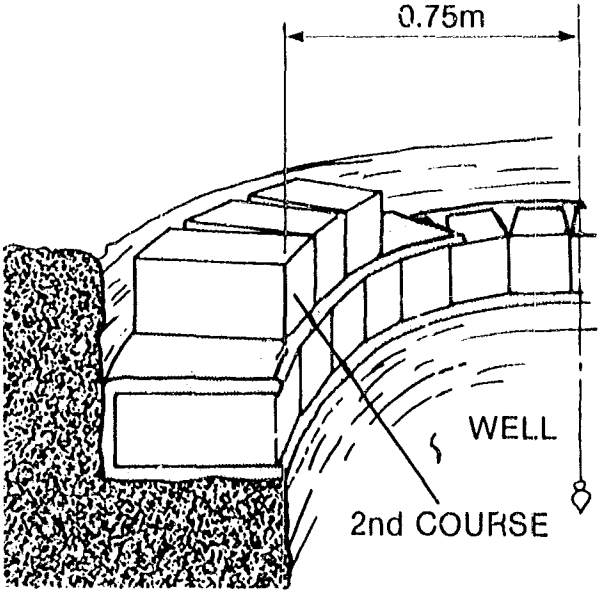

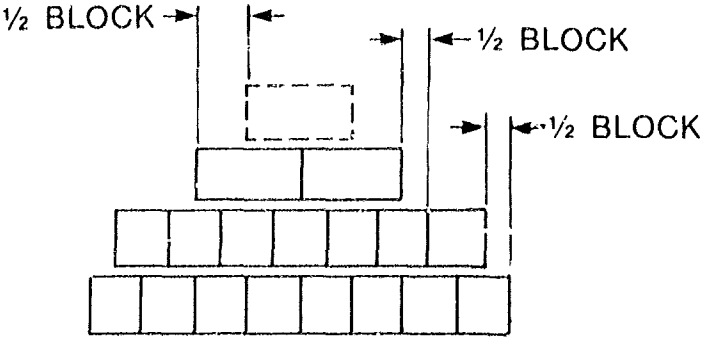

ORIENTATION OF BLOCKS

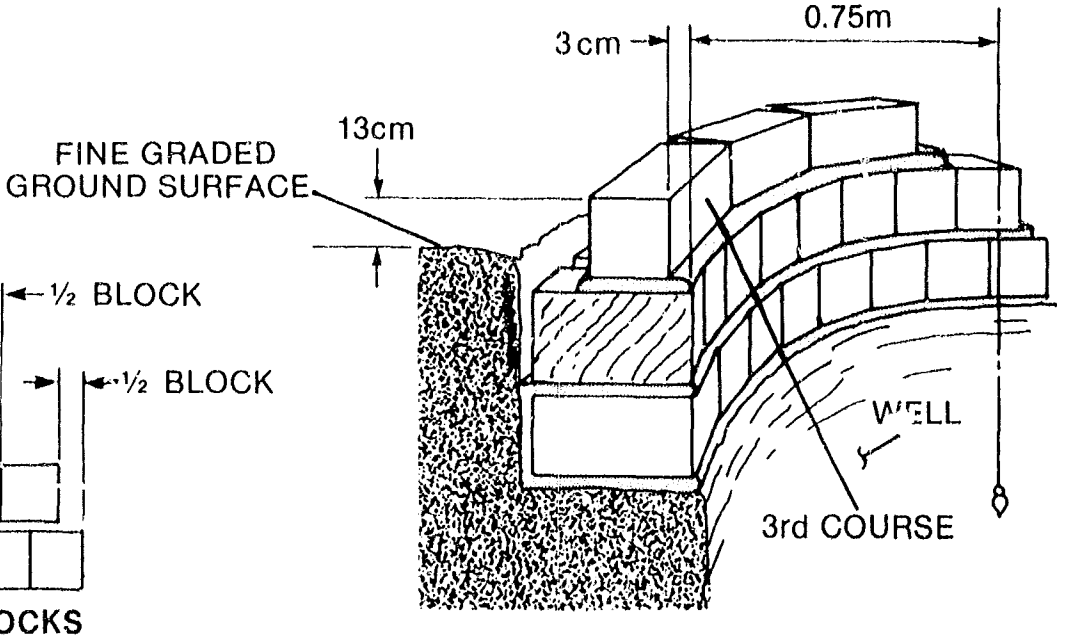

CONCRETE PRIMER

A. Selecting Ingredients

- Cement - Portland cement should be a free flowing powder. Make sure it has not gotten wet and hardened in the sack.
- Water - clean. If it is drinkable, then it is probably okay for concrete.
- Sand - uniform. From fine to 6 mm in size. Clean and hard.
- Gravel/crushed stone - Variable from 6 mm in diameter up to a diameter equal to one-fifth the thickness of the slab. Clean and hard.

B. Cleaning Sand and Gravel

If the sand and gravel are not clean, the concrete will not be as strong as if the ingredients are clean. Large stones, sticks, grass and clumps of earth and other debris need to be removed from the sand and gravel. If the sand and gravel are still not adequately clean, they can be washed with water.

C. Proportioning

There are four major ingredients in concrete. These are cement, sand, gravel, (also called aggregate) and water. A common proportion of these materials is 1 part cement to 2 parts sand to 4 parts aggregate. Proportioning can be by weight or volume. In this manual, volume measurements are used.

Note that the strength, durability, and watertightness of concrete are controlled by the amount of water used per sack of cement. In general, the less water used the better the quality of the concrete, so long as the mixture is plastic and workable. Some concrete must be stronger and more watertight than others: less water is used for such concrete. The final decision on the amount of water to be used is determined by the consistency of the concrete when it is mixed.

For normal concrete use a quantity of water equal to approximately 7 gallons (26.5 liters) per 50 kg (110 pound) sack of cement or 6 gallons (22.7 liters) per 94 pound bag.

For damp sand - which feels slightly damp to the touch, use 25.6 liters of water per sack of cement.

For wet sand - which feels wet and leaves a little moisture on the hands, use 23 liters of water per sack of cement.

For very wet sand - which is sand that leaves the hand wet and glistens or sparkles when picked up, use 20 liters of water per sack of cement.

D. Mixing by Hand

On most self-help projects, the amount of concrete needed is small and does not justify using a mechanical mixer. In any case a mechanical mixer may not be available or if it is, it will be expensive. If a few precautions are taken, hand-mixed concrete can be as strong as concrete mixed in a machine.

The first requirement for mixing by hand is a mixing area which is both clean and watertight. This can be a wood and metal mixing trough or a simple concrete floor (called a "pad").

Use the following procedures, being careful to measure all materials:

1. Spread the sand evenly over the mixing area.

2. Spread the cement evenly over the sand and mix these materials by turning them with a shovel until the color is uniform.

3. Spread this mixture out evenly, spread the gravel on it, and mix thoroughly.

4. Make a mound of the material in the center of the mixing pad, make a depression in the mound and pour the water into the depression, slowly and thoroughly mixing the material into the water with a shovel. Mix water and sand/cement/gravel mixture together twice to make sure it is thoroughly combined.

A workable mixture should be smooth and plastic, neither so wet that it runs nor so stiff that it crumbles. If it is too wet, add small amounts of sand and gravel, in the proper proportion until it is workable. If a concrete mixture is too stiff, it will be difficult to place in the forms. If it is not stiff enough, it means that too much water has been added and the concrete will be weaker than intended.

When the work for the day is finished, be sure to rinse the concrete from the mixing area and the tools to keep them from rusting and to prevent the concrete from caking on them. Smooth, shiny tools and mixing surfaces make mixing much easier. The tools will also last much longer.

E. Forming

A form is a mold into which the concrete is placed. The inside surface of the form should be sealed to prevent the concrete from sticking. This can be done by coating the inside with used motor oil. This also adds to the life of the form and makes it easier to remove.

Stakes should be driven around the sides of the forms to secure them so they will not move when the concrete is being poured.

F. Placing Concrete in Forms

To make strong concrete structures it is important to place the concrete in the forms correctly.

The wet concrete mix should not be handled roughly when it is being carried and put in the forms. It is very easy, through jogging or throwing, to separate the fine from the coarse gravel. Do not let the concrete drop freely for a distance greater than 90 to 120 cm (3 to 4 feet). Concrete is strongest when the various sizes of gravel and cement paste are well mixed.

Concrete which is too stiff is difficult to work into place in the form. Concrete that flows out when placed in a form is too wet and therefore weak.

As the concrete is being placed, it should be vibrated so there are no air holes to leave weak spots in the concrete. This can be done by agitating the concrete with some long thin tools. Agitating and vibrating can be done with a thin (2 cm) iron rod, a wooden pole, or a shovel.

Special attention must be paid to assure that the areas near the sides of the form are completely filled with concrete. If the forms are strong enough, they can be struck with a hammer on the outside to vibrate the concrete just enough to allow it to settle completely in the forms. Too much vibration, however, can force most of the large aggregate toward the bottom, thus reducing the overall strength of the concrete.

G. Reinforcement

Concrete is reinforced with various materials, usually steel rods called rebars. Steel rebars should be tied together with wire where they cross. Also common is steel wire mesh. Less commonly used and less effective is bamboo. If bamboo is used it should be completely dry (cured). The ends should be sealed to reduce water uptake. It should be split and used skin side down.

H. Finishing

Once the concrete is poured into the forms, its surface should be worked to an even finish. The smoothness of the finish depends on what the surface will be used for. If more concrete or mortar will later be placed on it, the surface should be left relatively rough to aid in bonding. If the surface will later be walked on, as for example the apron or the cover of a well on which a pump will be mounted, it should be somewhat rough to prevent people from slipping when it is wet.

A somewhat rough texture can be achieved by finishing with a wooden float or by lightly brushing the surface to give it a texture. A very smooth finish can be made with a metal trowel. Over-finishing (repeated finishing) can lead to powdering and erosion of the surface.

I. Curing Concrete

After the forms have been filled, the concrete must be cured until it reaches the required strength. The concrete must be kept moist during curing so that the chemical reaction that causes it to harden will continue for as long as is necessary to achieve the desired strength. The early stage of curing is extremely critical. Once the concrete is allowed to dry, the chemical hardening action will gradually taper off and cease. It cannot be re-wetted to re-start the hardening process.

The concrete can be kept moist by covering the exposed surfaces with canvas, empty cement bags, burlap, plastic, palm leaves, straws, and wet sand. The covering must also be kept wet so that it will not absorb water from the concrete. Covering is usually easier than continuously sprinkling or frequently dousing the concrete with water, another way to keep it moist.

MAKING CONCRETE AND MORTAR MIXES

Three different concrete and mortar mixtures will be used during this workshop. Mixtures are generally specified by the number of parts of cement to sand and to gravel (if gravel is to be used). For example a 1:2:4 mixture is made up of 1 part cement, 2 parts sand, and 4 parts gravel. The proportion of cement to the other ingredients is one of the factors which determines the strength of the hardened concrete. More cement tends to make the concrete stronger, thus, the mixture depends on the purpose for which the concrete is to be used.

There are two other variables in a concrete mix, namely, the size of the gravel (also called aggregate) and the amount of water used in making the mix. The size of the gravel depends on the thickness of the structure for which the concrete is to be used. Comparatively large rocks may be used for a massive structure such as a concrete dam. Fine gravel no larger than 1 inch in diameter should be used for thin slabs and walls.

The proposed use of the concrete also determines the amount of water which may be used. For massive structures and thin walls, a soft, plastic concrete mix is used for ease of placing (pouring). Also, with a soft mix, it is easier to make sure that the concrete fills the forms without leaving holes. However, the wetter the concrete is the weaker it will be, so the amount of water must be controlled carefully. Cement mortar should be stiff enough so that it will stay on a trowel as it is moved into place and so that it will not run out of vertical spaces between the ends and sides of adjacent concrete blocks.

For this workshop, the following concrete and mortar mixtures will be used:

1. For concrete blocks: 1:4 (no gravel), with water enough to make a mix that will fill all of the corners in the concrete block form when vibrated with a paddle. It should not be soupy or runny.

2. For the concrete apron: 1:2:4, with about the same proportion of water as used in No. 1 above. The gravel may be up to 2.5 cm in diameter.

3. For the cement mortar that is used in the joints between the concrete blocks in the foundation and in the headwall, 1:3 (no gravel). In this mixture, the proportion of water is very critical. The mortar must be stiff enough to stay on a trowel and to stay in vertical spaces between the concrete blocks.

It is important to measure the ingredients accurately for the mixtures listed above. A measuring box will be made which will hold exactly one cubic foot.

BUILDING CONCRETE BLOCK FORMS AND A MEASURING BOX

STEPS FOR ASSEMBLING THE FORMS

1. Cut the required pieces of wood for constructing the form (see Figure 1).

2. Assemble the concrete block form.

   a. Nail the baseboard and frame together.

   b. Assemble the upper frame.

   c. Nail the support blocks on the two side form boards 3 cm from the top of the form.

   d. Place the baseboard and frame on a flat surface near the concrete mixing pad.

   e. Stand the two side forms on the baseboard against the two outer strips.

   f. Wedge the two end forms between the two side forms to make a box. If the side boards do not wedge tightly, caulk along the edges with old rags, making sure that no rags protrude into the inside of the form where the concrete is to be poured.

   g. To hold the side and end forms together, place the upper frame on the assembled concrete block form so that it rests on the support blocks.

   h. Paint the inside surface of the box with used engine oil to keep the concrete from sticking to the wooden form.

   Note: Figure 2 shows how to construct a form for fabricating a small or half-sized concrete block.

STEPS FOR ASSEMBLING THE MEASURING BOX

Follow the instructions in Figure 3.

MATERIAL

<u>For one concrete block form</u>.

Baseboard and frame:

Pieces of wood cut to the following dimensions:

1 piece - 2 cm x 29 cm x 54 cm (baseboard)
4 pieces - 2 cm x 5 cm x 34 cm
2 pieces - 2 cm x 5 cm x 44 cm
2 pieces - 2 cm x 5 cm x 54 cm

Side and end forms:

Pieces of wood cut to the following dimensions:

2 pieces - 2 cm x 15 cm x 44 cm
2 pieces - 2 cm x 15 cm x 20 cm
4 pieces - 2 cm x 5 cm x 5 cm

nails
used engine oil

Note: Finished lumber 2.5 cm thick which is planed both sides will result in a board 2.0 cm thick.

<u>For one 28 liter (1 cubic foot) measuring box with carrying rails</u>.

Pieces of wood cut to the following dimensions:

2 pieces - 2 cm x 30 cm x 30 cm
2 pieces - 2 cm x 34 cm x 34 cm
1 piece - 2 cm x 34 cm x 34 cm
2 pieces - 2 cm x 10 cm x 84 cm

used engine oil
nails

Figure 1

FORMS FOR MAKING CONCRETE BLOCKS

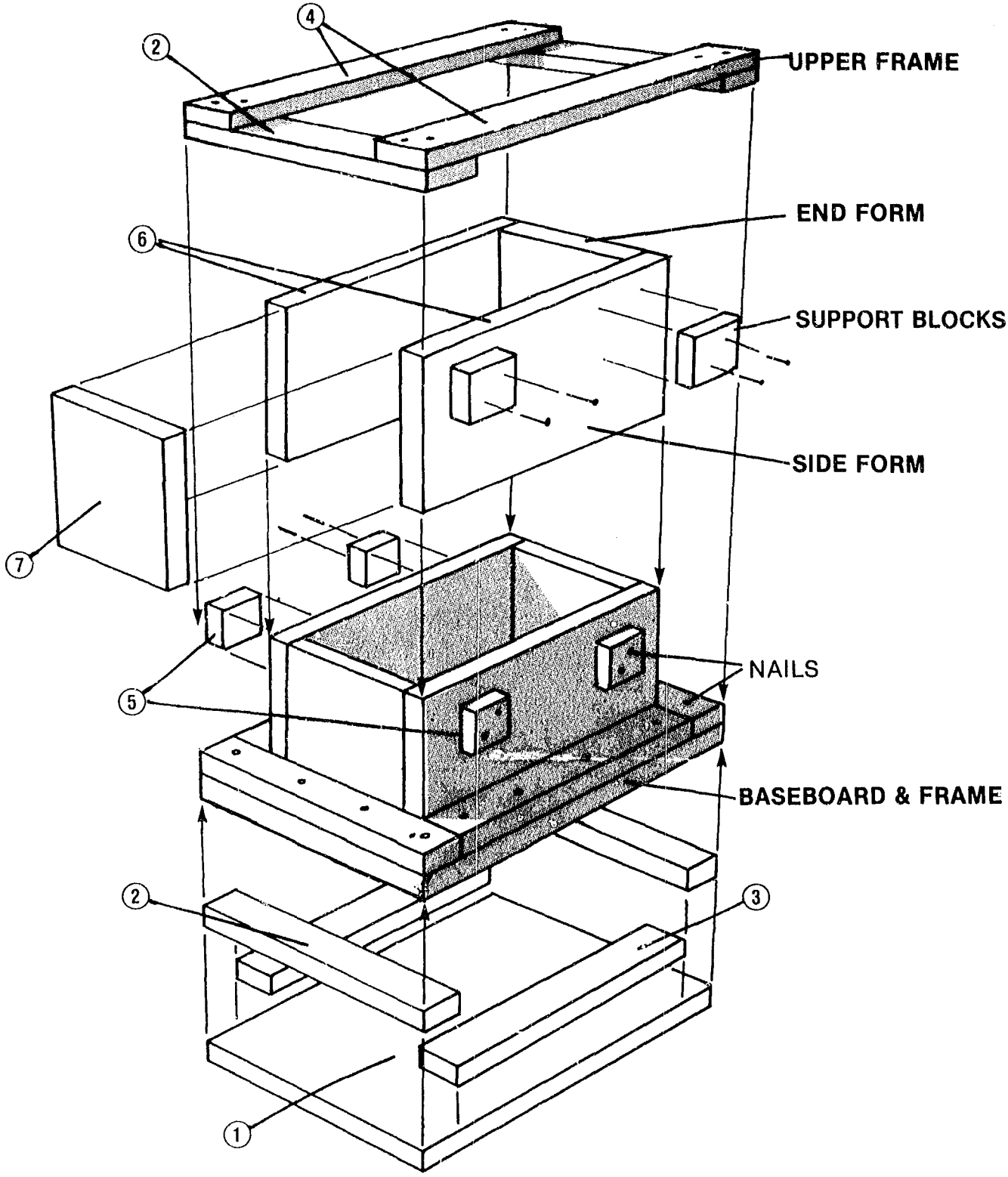

1 - BASE BOARD 2cm x 34cm x54cm (1 pc)
2 - FRAME 2cm x 5cm x 34cm (4 pcs)
3 - FRAME 2cm x 5cm x 44cm (2 pcs)
4 - FRAME 2cm x 5cm x 54cm (2 pcs)
5 - SUPPORT BLOCKS 2cm x 5cm x 5cm (4 pcs)
6 - SIDE FORMS 2cm x 15cm x 44cm (2 pcs)
7 - END FORMS 2cm x 15cm x 20cm (2 pcs)

BASED ON CONCRETE BLOCK OF 15cm x 20cm x 40cm

Figure 2

MODIFIED FORM FOR FABRICATING PARTIAL CONCRETE BLOCK

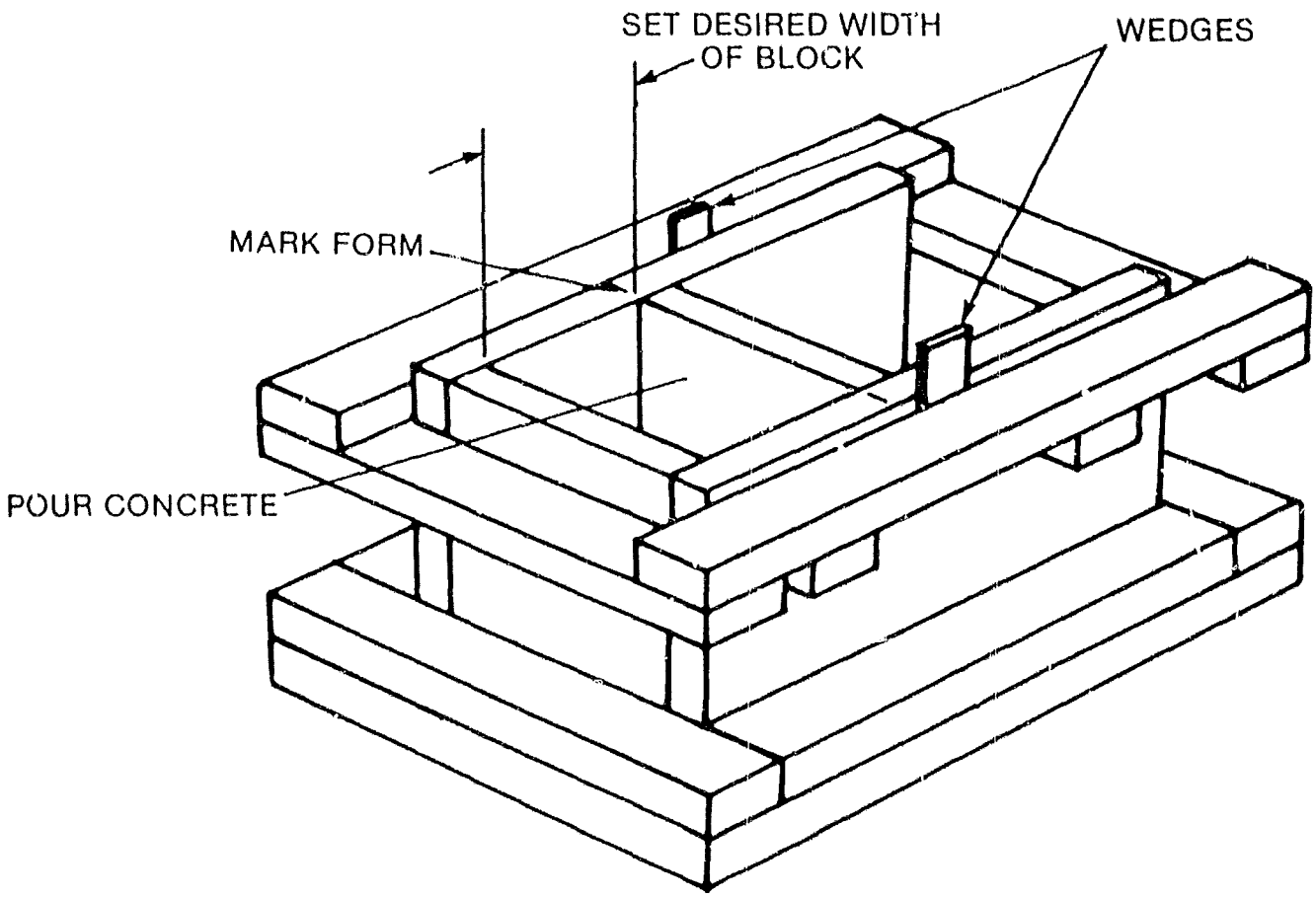

Figure 3

STEPS FOR BUILDING A ONE CUBIC FOOT MEASURING BOX

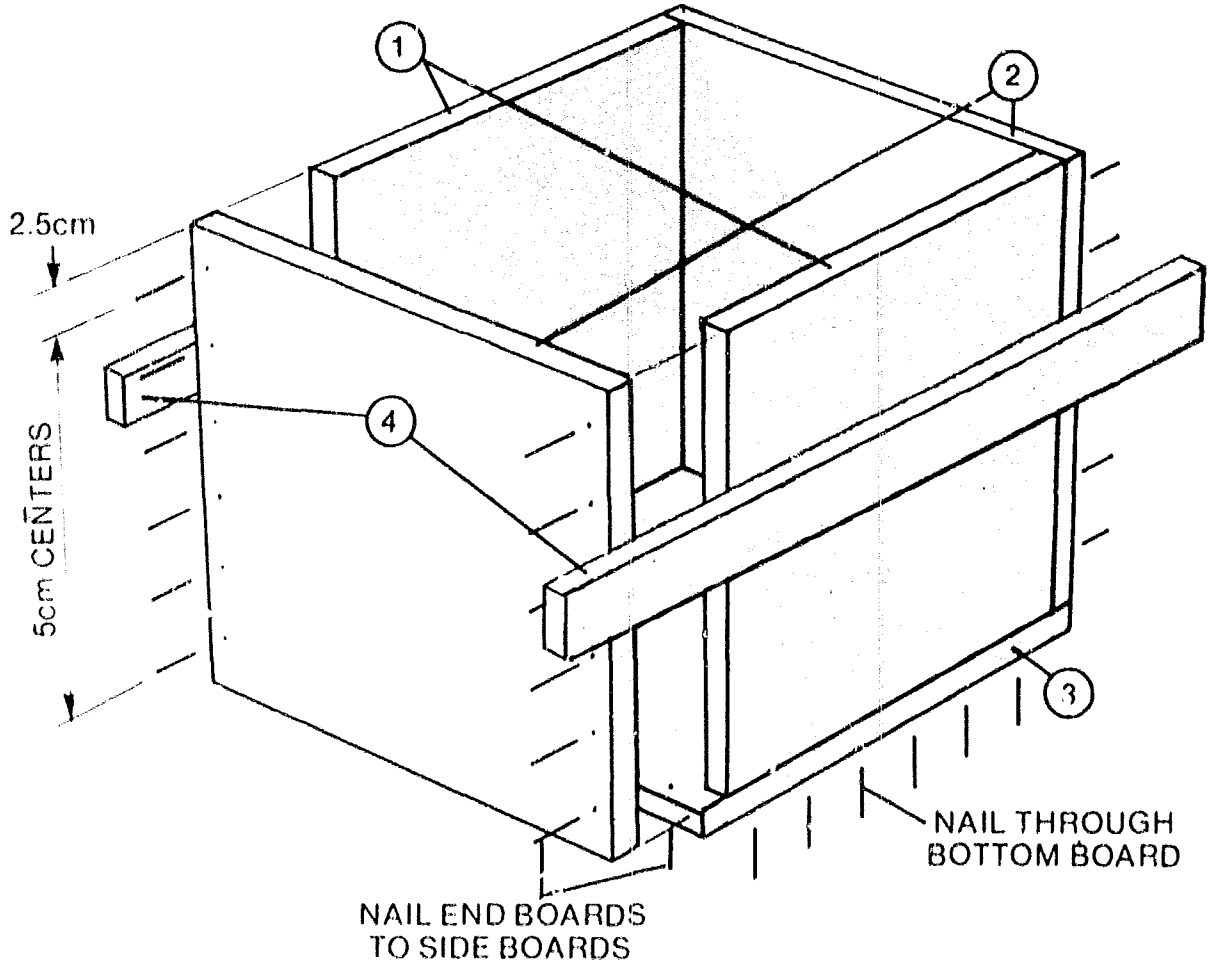

1. MATERIALS TO MAKE A 28 LITER (1 CUBIC FOOT) MEASURING BOX:

REF. DWG.	
1	2cm x 30cm x 30cm (2 pcs)
2	2cm x 34cm x 30cm (2 pcs)
3	2cm x 34cm x 34cm (1 pc)
4	2cm x 10cm x 84cm (2 pcs)
AS REQ'D	USED ENGINE OIL
	NAILS - 5cm × 6d BOX

2. PROCEDURE
   1. CUT LUMBER AS SHOWN IN ABOVE LIST.
   2. NAIL BOTTOM TO SIDES
   3. NAIL SIDES TOGETHER
   4. PAINT INSIDE WITH LIGHT COAT OF USED ENGINE OIL.

MIXING AND POURING CONCRETE BLOCKS

1. To pour the concrete block, follow these steps:

   a. Mix the concrete, using 4 parts of sand and 1 part of cement and adding only enough water to make a stiff mix.

   b. The preferred sand for concrete is sharp quartz river sand, because of its strength. It should be clean, free of dirt and rubbish. The water used should also be clean and free of debris and mud.

   c. Mix the concrete on a flat, hard, clean surface.

   d. Spread the sand on the mixing surface first, then add the cement on top.

   e. Mix the sand and cement with flat blade shovels until the mixture is a uniform color.

   f. Pile the sand-cement mix into a mound and make a bowl-like depression in its center.

   g. Pour a small amount of water into the depression and shovel the mix into it, gradually adding more water and shoveling the mix into it until the mixture is the right consistency -- in this case, stiff.

   h. It is important not to add too much water at a time, as the mix should be quite dry, not soupy and runny. If the mix is too wet, add a small amount of the sand-cement mixture to absorb the extra water.

   i. Place the concrete in the form and vibrate it by agitating it with a flat stick so that it fills the form completely.

   j. When the form is full, scrape off the top with a flat board to leave a rough surface.

   k. After two days remove the forms. The blocks should be kept moist for at least three days before being moved to the construction site.

2. To remove the concrete form, follow these steps:

   CAUTION: The concrete block has not reached its full strength by the end of two days, so it should be handled carefully to avoid breaking it or chipping off the corners.

   a. Lift the upper frame off the form.

b. Work the side forms away from the concrete block by pulling them up off the baseboard and frame.

c. Remove the end forms.

d. Take the concrete block off the baseboard and set it aside on a clean, hard surface until it is ready to be used.

e. If possible, store the concrete blocks in a shady place. Keep them covered with moistened empty cement sacks or grass for a week, either in the storage area or when actually laid in place.

MATERIAL FOR 4 BLOCKS OF 1:4 PROPORTION

paddle (for vibrating concrete)
10 liters (1/3 sack) of cement
40 liters (1-1/3 sacks) of clean sand
clean water

EQUIPMENT FOR MAKING CONCRETE BLOCKS FOR EACH WELL

2 flat blade shovels
2 buckets for carrying water
1 wheelbarrow or head pallet
2 hammers
1 paint brush for applying used engine oil

WATER LIFTING DEVICES

SIMPLE PIPE DEVICE FOR DRAWING WATER

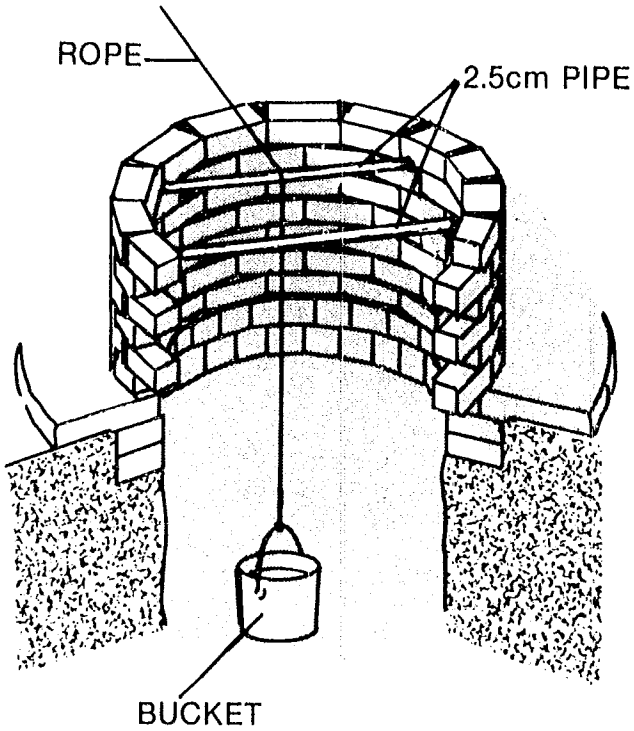

SIMPLE PULLEY DEVICE FOR DRAWING WATER

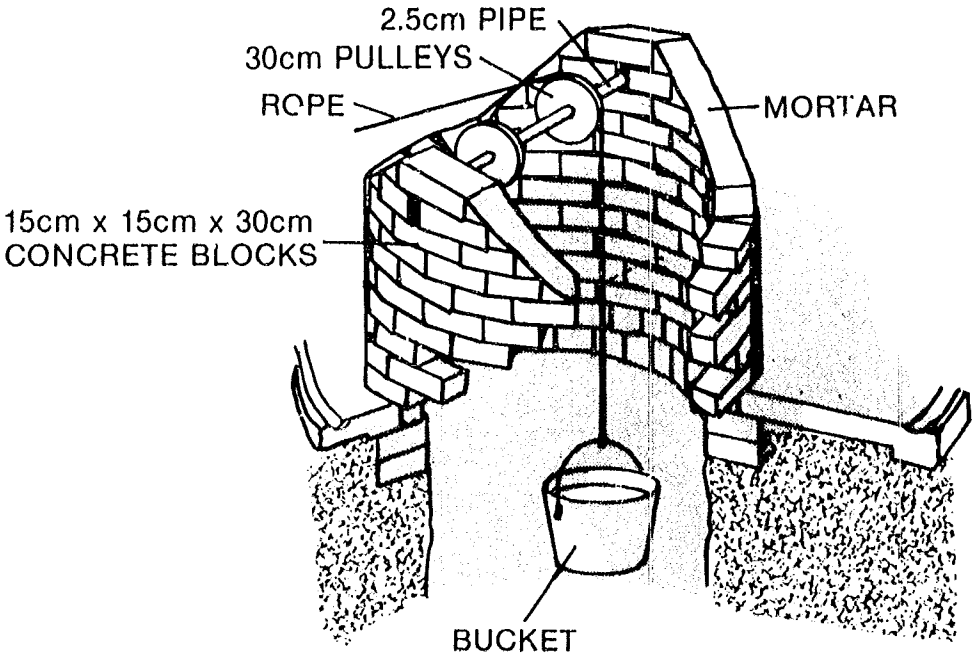

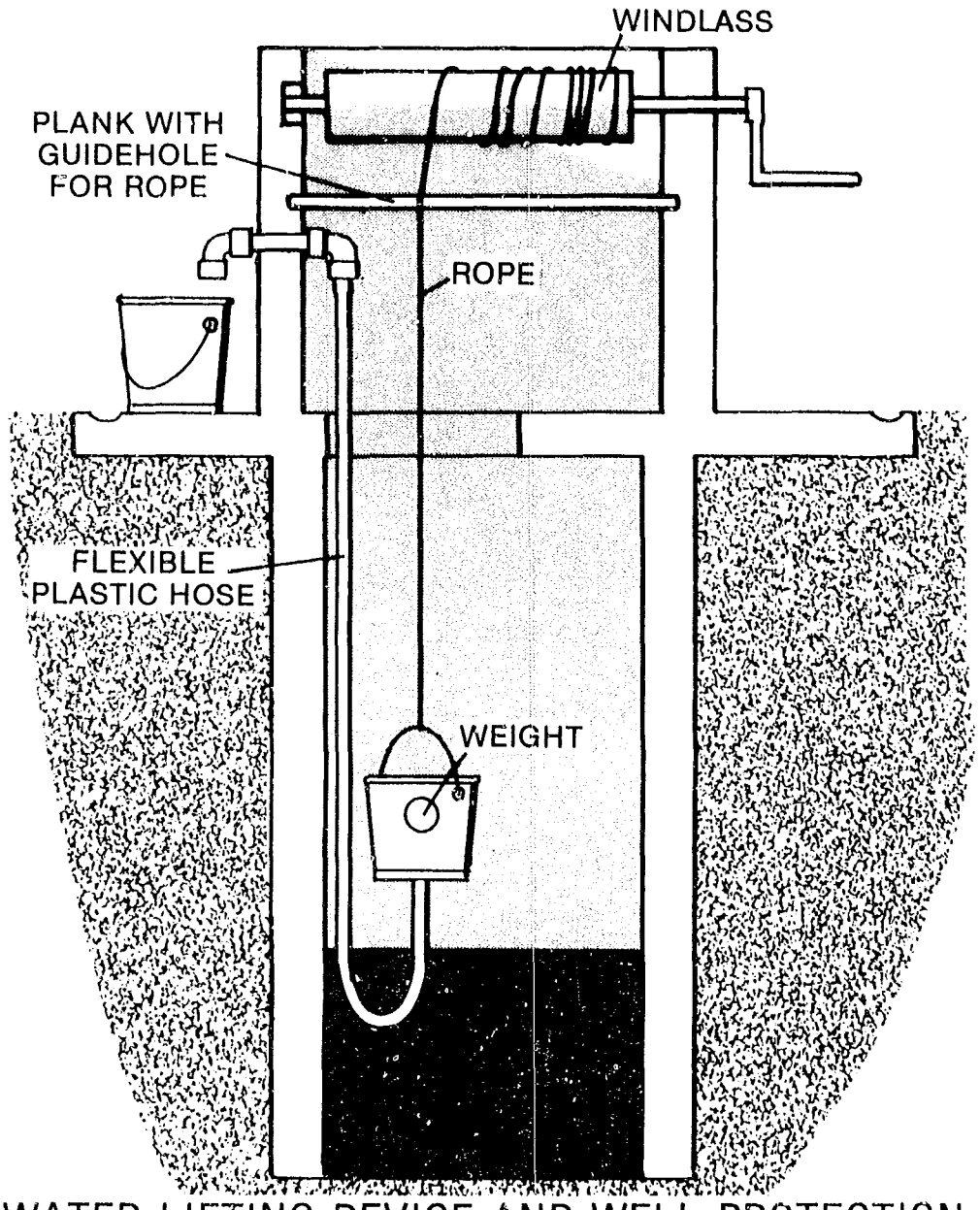

WATER LIFTING DEVICE AND WELL PROTECTION

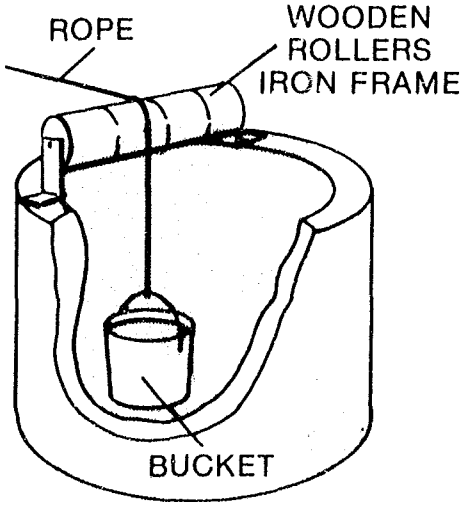

ROLLER TYPE

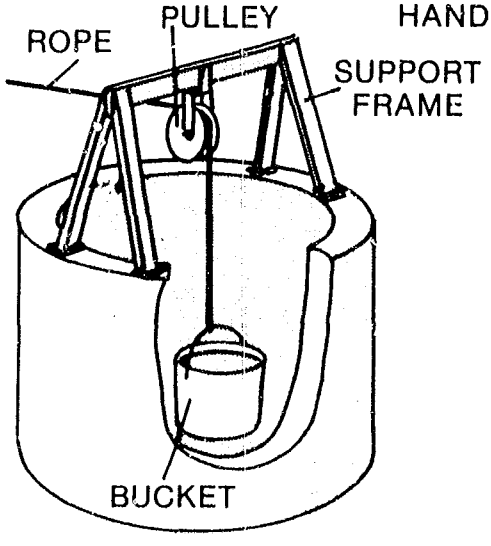

PULLEY TYPE

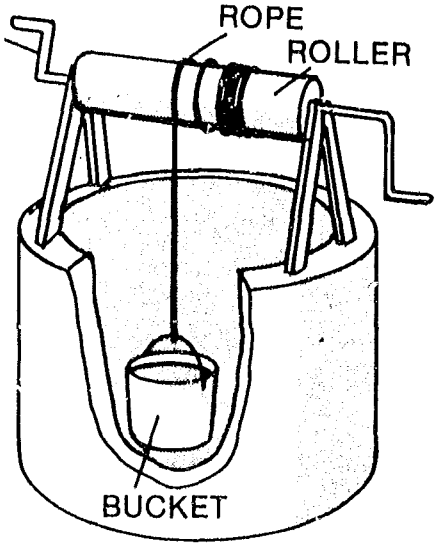

WINDLASS TYPE

CONSTRUCTION STEPS
Preparation for Apron Pour

1. Make sure the apron area is cleaned of all vegetation, mud, and stone and is graded appropriately.

2. Check the location and leveling marks of the four outer support stakes (5, 6, 7, 8) set in Session 8. Make sure they are still 2.20 meters from the center of the well and that all of the level marks are about 13 cm above the rough ground grade and even with the top of the concrete blocks of the foundation.

3. Install additional stakes at the points shown in Figure 1 (i.e., stakes 6b, 7a, 7b, 8a, etc.). These will also support the screed support boards. The inside edge of each of these stakes is to be located 2.20 meters from the center of the well. The distance between the stakes should equal the length of the screed support boards. Determine the length of these boards from the chart on Figure 1. Since the apron has twelve sides, then each screed support will measure 1.14 meters (radius x 0.51764 or 2.20 x 0.51764 = 1.14 meters).

4. After placing all of the stakes, put a leveling mark (from stakes 5, 6, 7, 8) on each one as shown in Figure 2.

5. Then mark screed support elevations <u>from leveling marks</u> on each stake, as follows (see the chart in Figure 2):

Stake #5	25.4 mm below leveling mark
Stakes #5(a) & 7(b)	15.2 mm below leveling mark
Stakes #6(a) & 8(b)	5.0 mm below leveling mark
Stakes #6 & 8	at leveling mark
Stakes #6(b) & 8(a)	5.0 mm above leveling mark
Stakes #7(a) & 7(b)	15.2 mm above leveling mark
Stake #7	25.4 mm above leveling mark

Note: These elevations are the same for all wells regardless of diameter.

6. Nail the screed support boards to the stakes at the elevations marked in step 5. The top of the support boards should be even with the elevation mark. Cut stakes off so they are even with the screed supports. Put in additional stakes or place dirt behind the support boards to add support during the apron pour.

7. Use a 2.5 cm x 5 cm x 13 cm stick to measure the distance between the bottom of the screed and the ground to determine the elevation of the graded ground surface.

8. Fine grade the apron area using the 13 cm long stick to establish the correct elevation (this and the next two tasks will be divided up between teams). When finished, the entire area should be sloping, and should

allow for a constant apron thickness of 13 cm when the apron is poured to the top of the support boards.

9. While fine grading, dig the 2.5 cm x 23 cm channel.

Rebar Installation

10. Cut the rebar into pieces 6 meters long, bend them, and tie them into a circle 2.0 meters in diameter.

11. Cut the rebar into pieces 6 meters long, bend them, and tie them into a circle 3.8 meters in diameter.

12. Place the two rebar circles on the apron area and support them on rocks as shown in Figure 1.

13. Place radial rebars so that their ends fit between the concrete blocks in the top layer. Tie them to the rebar circles at each junction.

14. Place 25 cm lengths of rebar so that their ends fit between the small rebar circle and the joints between the second layer of blocks. Tie these pieces to the inner circle at each junction.

Screed Centering

15. A screed is used to ensure that the apron surface is smoothed and even with the top edge of the screed support boards and drains in the right direction. In addition, the drainage channel around the apron can be formed by a U-shaped piece of wood attached to the screed. To ensure that the channel is dug at a constant radius from the well center, a screed centering device is constructed and placed in the well.

16. The details for construction of the screed centering device and its placement are shown in Figures 2 and 3.

MATERIAL FOR ONE WELL

Pieces of wood cut to the following dimension:

2 pieces - 2.5 cm x 5 cm x 13 cm (sticks for measuring)

8 pieces - 5 cm x 5 cm x 75 cm (stakes for screed supports)

12 pieces - 2.5 cm x 5 cm x 150 cm (screed supports) (to be cut to fit in field)

4 pieces - 5 cm x 10 cm x 150 cm (screeds)

nails

4 sacks of cement

dirt (free of rubbish and grass)

water

38 meters of 10 mm rebar

10 meters of tie-wire

EQUIPMENT FOR ONE WELL

3 buckets

2 hammers

2 carpenter's levels, at least 1 meter long or a 1.5 meter hose, transparent if available

2 round blade shovels

2 flat blade shovels

2 crowbars (for prying out large rocks)

1 mixing pad

1 measuring box (1 cubic foot capacity) (made during workshop)

2 rakes

2 pairs of pliers for tying tie-wire

1 bar cutter or hacksaw for cutting rebars

2 wire cutters for cutting tie wire

1 metric tape measure

Figure 1

PLAN VIEW OF SCREED SUPPORTS AND REBAR PLACEMENT

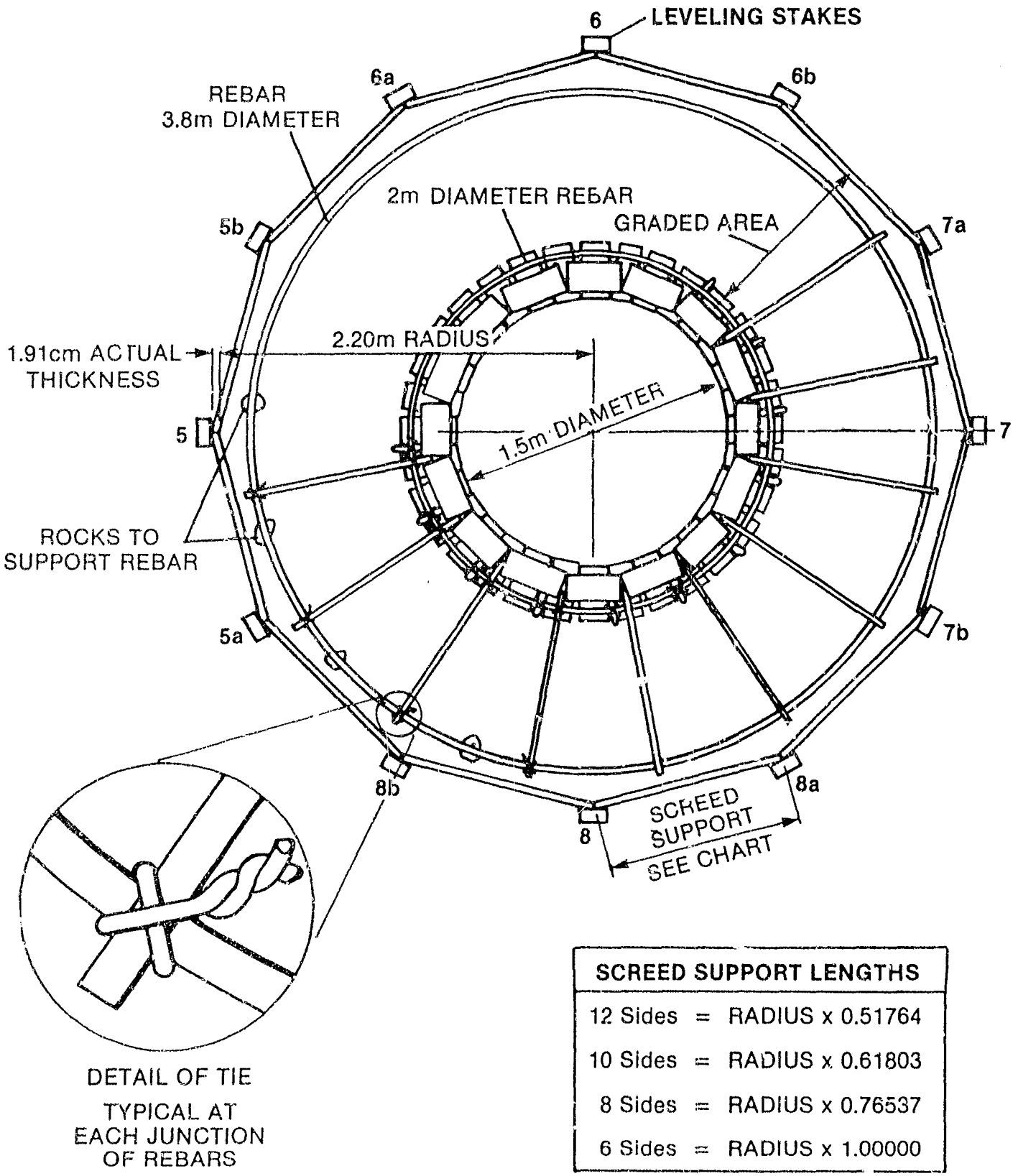

SCREED SUPPORT LENGTHS		
12 Sides	=	RADIUS x 0.51764
10 Sides	=	RADIUS x 0.61803
8 Sides	=	RADIUS x 0.76537
6 Sides	=	RADIUS x 1.00000

Figure 2

PLACING SCREED SUPPORTS AND REBARS

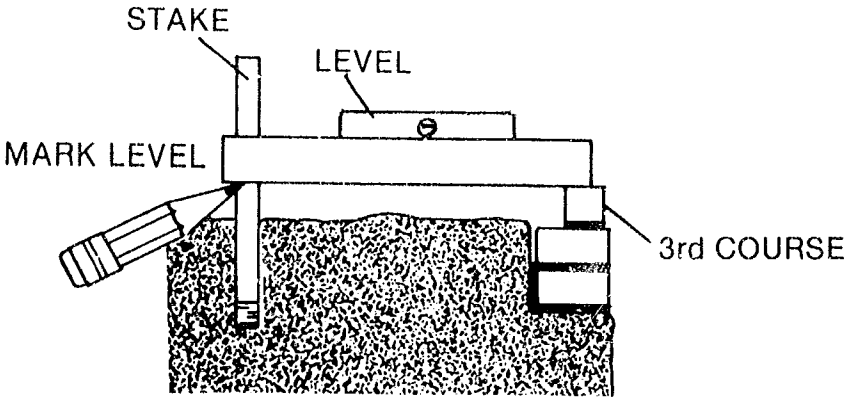

STEP 1 - PUT A LEVELING MARK ON ALL 12 STAKES. NUMBER STAKES AS SHOWN IN FIGURE 2.

ALL DIMENSIONS IN MM

STAKES	ABOVE LEVEL	AT LEVEL	BELOW LEVEL
7	25.4		
7a, 7b	15.2		
6b, 8a	5		
6, 8		0	
6a, 8b			5
5a, 5b			15.2
5			25.4

STEP 2 - MARK STAKES PER CHART FOR SCREED SUPPORT ELEVATIONS.

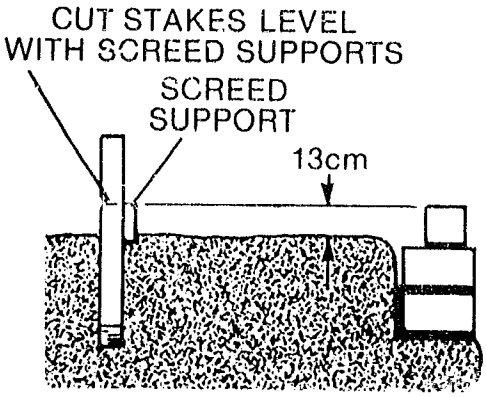

STEP 3 - CUT SCREED SUPPORTS TO S (SEE CHART, PAGE 5, FOR LENGTH SIDES SELECTED). NAIL SCREED SUPPORTS TO STAKES IN LINE WITH SUPPORT ELEVATION MARKS.

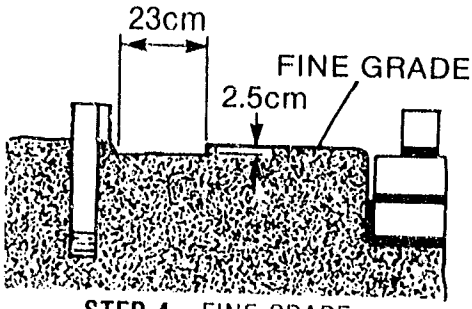

STEP 4 - FINE GRADE.

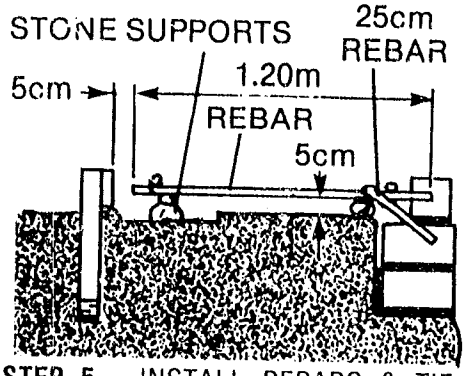

STEP 5 - INSTALL REBARS & TIE AT EACH JUNCTION OF REBARS.

28L

Figure 3
SCREED CENTERING DEVICE

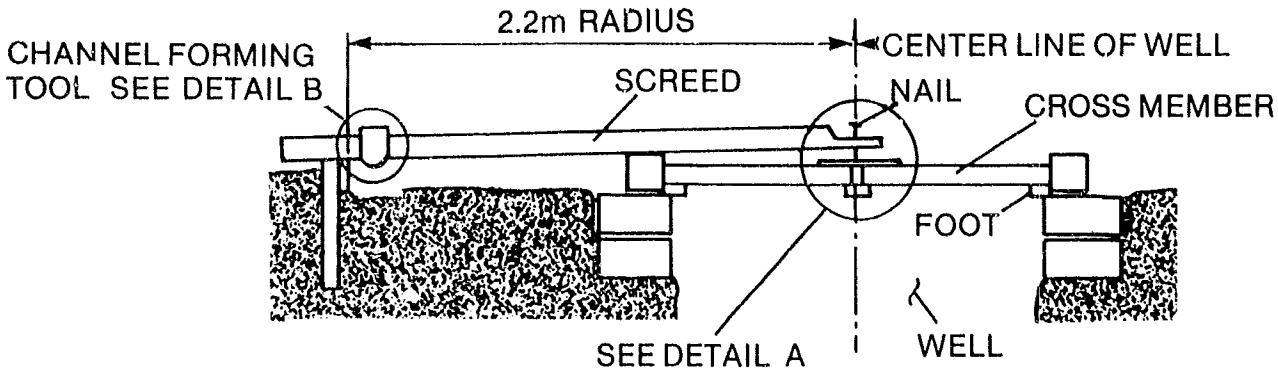

STEP 6 - MARK AND CUT WELL CROSSMEMBER TO FIT TIGHTLY INTO WELLS 3rd COURSE (MAINTAIN WELL CENTERLINE LOCATION). CUT FEET AND NAIL FEET TO ENDS OF CROSSMEMBER. CUT 5cm x 10cm SCREED PER DETAIL AND NAIL TO CENTERLINE OF CROSSMEMBER AS SHOWN. CUT CHANNEL FORMING TOOL AND ATTACH FORMING TOOL TO SCREED.

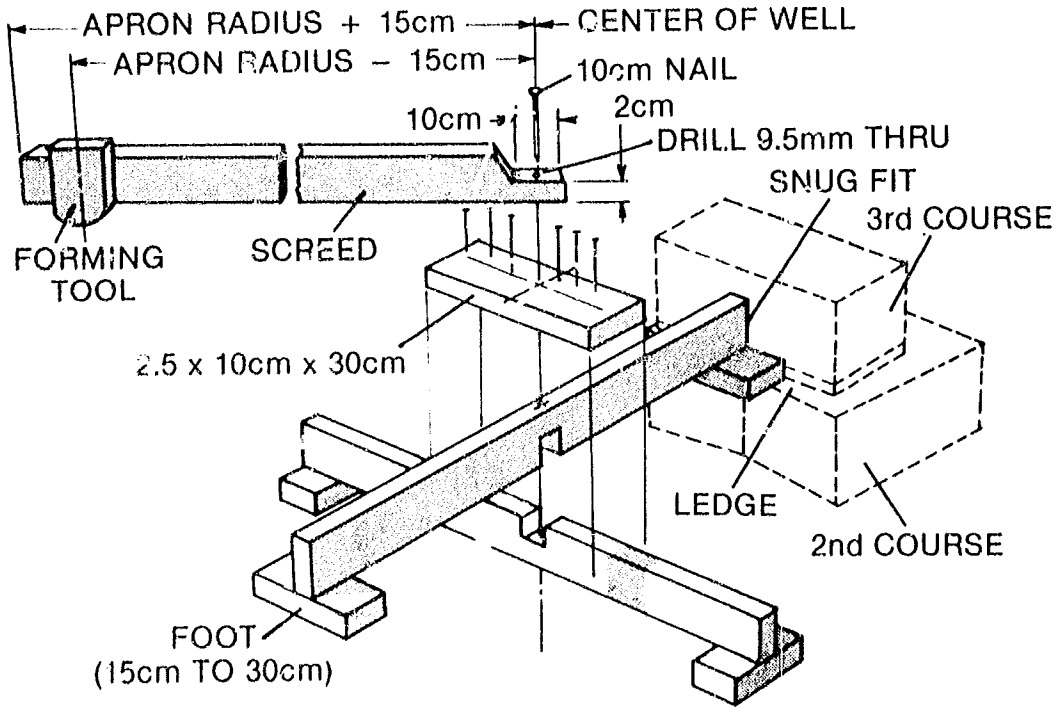

CONSTRUCTION OF CROSSMEMBER
DETAIL A

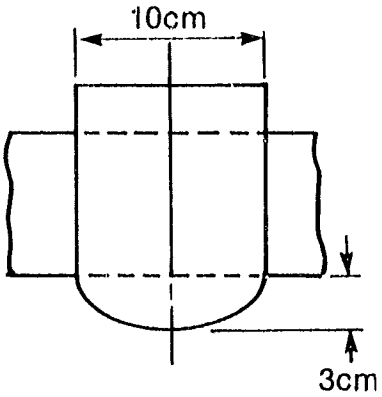

CHANNEL FORMING TOOL
DETAIL B

CONSTRUCTION STEPS FOR APRON POUR

1. Prepare for the apron pour by calculating how much concrete will be needed and the quantity of materials needed to mix that amount. See Figure 1 for instructions on how to make these calculations.

2. Near the apron, assemble the sand, gravel, cement, and water that will be needed for mixing the concrete. Instructions for mixing concrete are given in Handout 9-1.

3. Prepare a concrete mix of 1 part of cement to 2 parts of clean sand and 4 parts of gravel on the mixing pad and mix with the appropriate amount of water. The mixture should be slightly wet so that it can be vibrated into all crevices, but not wet enough to run. (The concrete pour should be continuous so that the end result is a solid mass of concrete without any joints).

4. Deliver the concrete in a wheelbarrow or on a head pallet to the apron site. Shovel or dump it into the form at regular intervals so that it may be spread around to cover the whole apron area.

5. Vibrate the concrete (agitate it with 2.5 cm x 5 cm x 2 m sticks) as you spread it around evenly in the form. Do not mound it up in one place.

6. As the pour reaches the top of the form, move a straight edged screed (5 cm x 10 cm x 150 cm) back and forth horizontally to smooth the surface of the concrete. One end of the screed should be resting on the concrete block foundation and the other on the screed support at the outer edge of the apron.

7. Let the concrete settle for an hour or so or until it has stiffened a little. Then attach the channel forming tool to the screed 10 cm in from the inner edge of the screed supports (see Figure 2). Nail one end of the screed to the crossmember over the well so that the screed can be moved around the apron surface like a hand on a clock. Move the screed around the apron several times, gouging out the depression for the drainage channel. Work the surface of the drainage channel with a trowel to leave a smooth surface. Be sure to also cut out an opening from the drainage channel to the drainage ditch.

8. As the concrete sets, finish the surface using a wooden float. Move the float over the concrete surface with a circular motion to produce a roughened non-skid finish.

9. Cover the concrete with empty cement sacks and keep it moist for seven days.

10. Spread brambles on the apron to keep animals and people from walking on it. WARNING: The concrete must not be stepped on for at least two days. THIS IS IMPORTANT.

MATERIAL FOR ONE WELL

260 liters (.26 cubic meters) of cement (9.2 sacks)
520 liters (.52 cubic meters) of sand (19 sacks)
1040 liters (1.04 cubic meters) of pea gravel (38 sacks)

Pieces of wood cut to the following dimensions:

2 pieces - 5 cm x 10 cm x 200 cm (vibrating sticks)
4 pieces - 5 cm x 10 cm x 140 cm (screeds)
4 pieces - 2.5 cm x 7.5 cm x 14 cm pieces for attachments to the screeds
4 pieces - 2.5 cm x 15 cm x 30 cm and 4 pieces - 2.5 cm x 5 cm x 15 cm (wooden floats)

water
nails
empty cement sacks
20 meters of rope
brambles

EQUIPMENT FOR ONE WELL

4 flat-bladed shovels
2 wheelbarrows or head pallets
2 hammers
3 trowels
3 buckets
1 bar cutter

Figure 1

CALCULATIONS FOR CONCRETE MIX

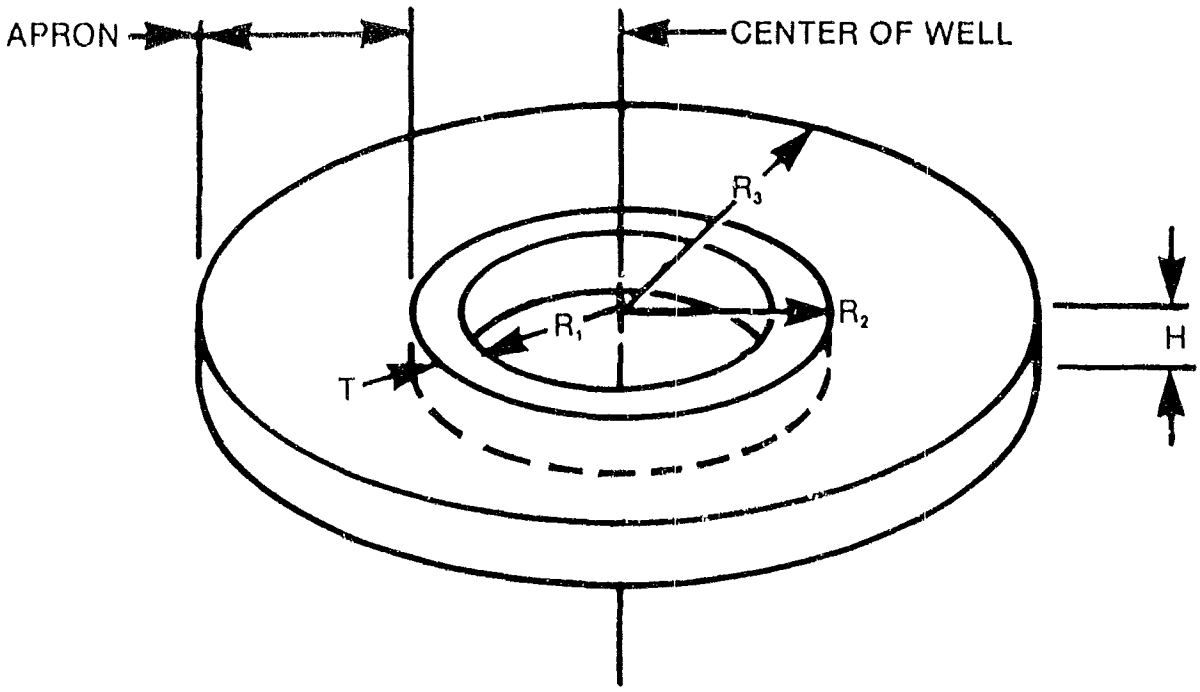

π = 3.14
H = 0.15m
T = 0.15m
R_1 = 0.75m
R_2 = R_1 + T
R_3 = 2.20m

V (APRON) = (π x R_3 x R_3 x H) - (π x R_2 x R_2 x H)

V = (3.14 x 2.2 x 2.2 x 0.15) - (3.14 x 0.9 x 0.9 x 0.15)
V = (2.28) - (0.38)
V = 1.9 (IN CUBIC METERS)

Figure 1 (Continued)

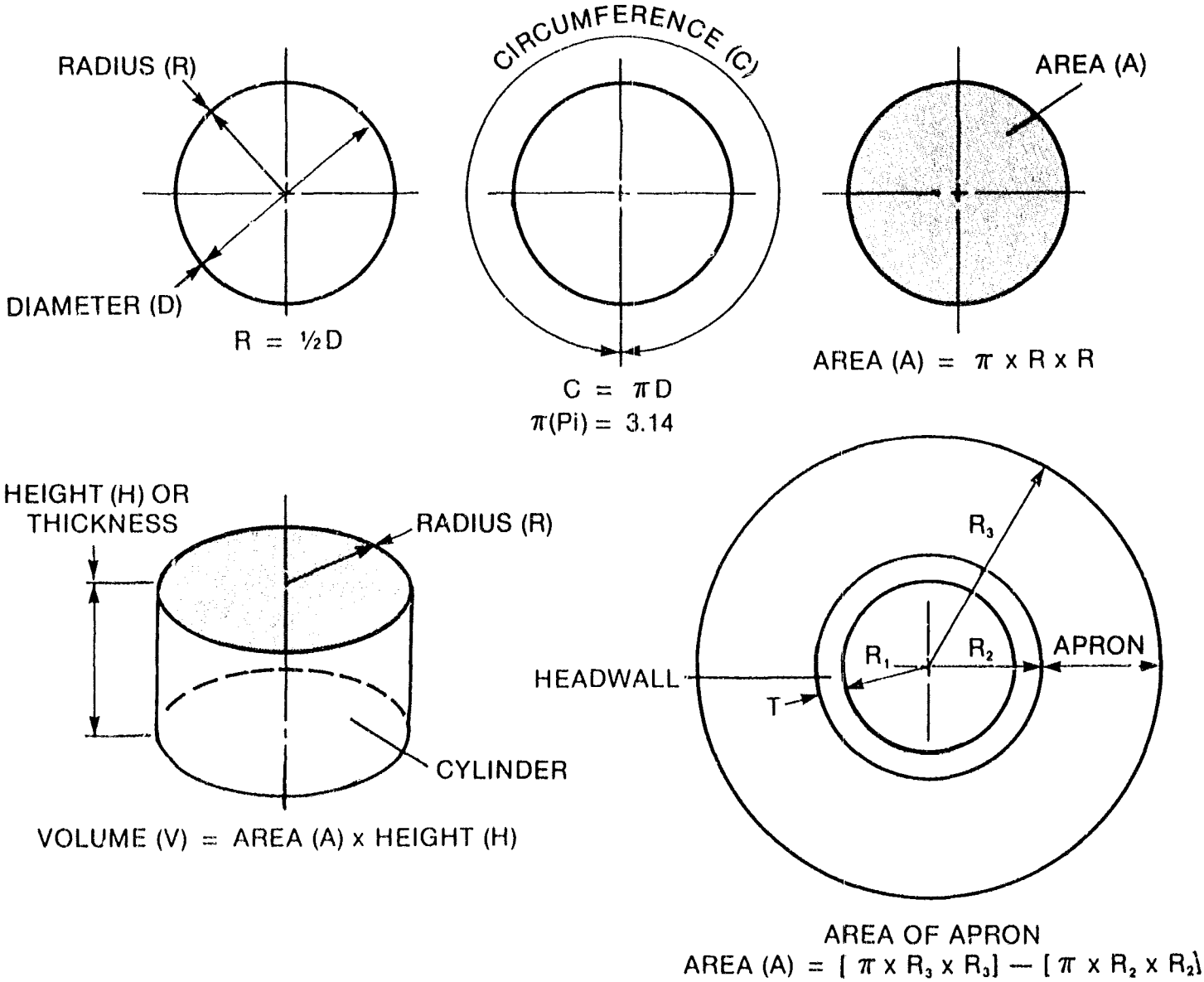

Figure 2

CONCRETE APRON POUR
(USING SCREED & SUPPORTS FOR FINISHING CONCRETE SURFACE)

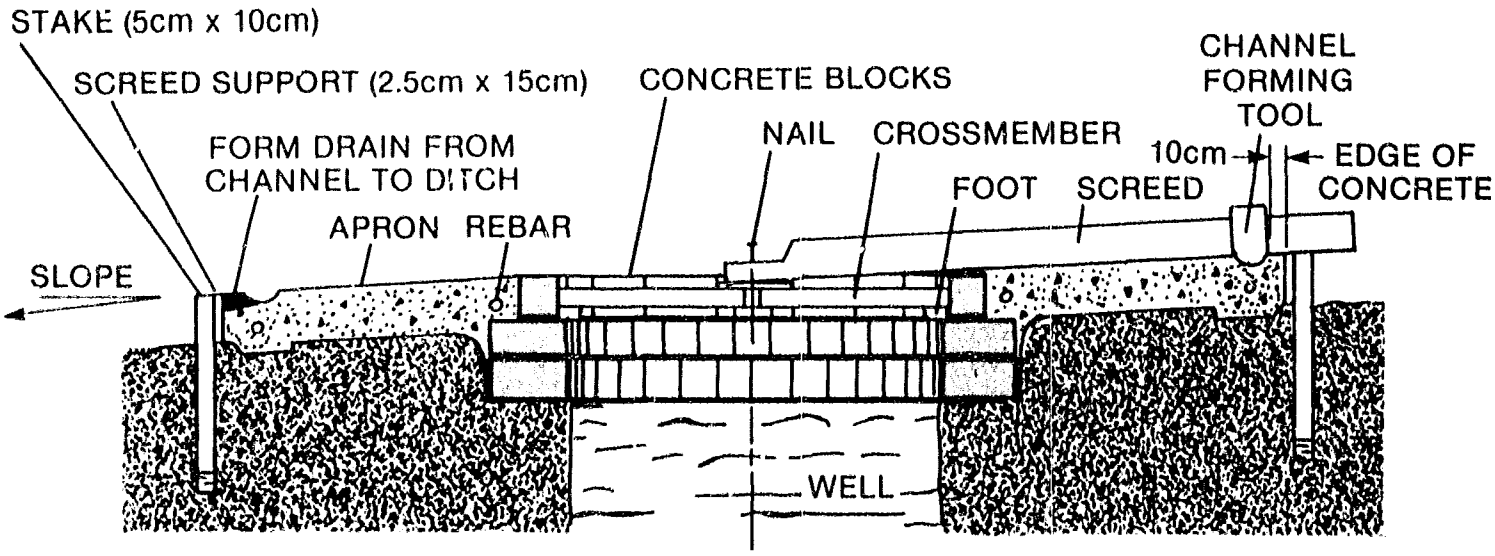

SECTION THROUGH CENTER OF WELL

USER EDUCATION TOPICS

Select one of these topics:

Topic A. Water and Your Life

For this topic, cover some or all of the following points:

- List/discuss uses of water.
- What is the most important use of water for people in your community?
- What kind of water can make people ill?
- What happens when you drink water that is not clean?
- Who gets sick most often?
- What can you do so children do not get diarrhea often?

Topic B. Why Improve Sanitary Conditions around a Well

For this topic, cover some or all of the following points:

- How disease spreads through contaminated water
- Effects of livestock and human waste.
- Keeping laundry and other washing away from drinking water.
- Benefits of low-cost improvements.

Topic C. Maintenance of Well-Site

For this topic, cover some or all of the following points:

- Periodic disinfection of water.
- Maintenance of rope bucket and any pulley device.
- Keeping well area clear of weeds, puddles, and debris.
- Daily or frequent sweeping and clean up of apron and ground surface around well.
- Maintenance of fence or other means of keeping animals away.
- Ensuring the water is used only for drinking.

Topic D. Collecting, Storing, and Using Water

For this topic, cover some or all of the following points:

- What sources of water do people use in your community?
- Which sources have the best water for drinking?
- Some communities have clean water but children still get diarrhea. Why?
- How do people in your community collect water?
- How do people store water?
- How can water get dirty?
- What are some things a mother can do so her child gets clean water?

RESOURCES CHECKLIST

Materials	Quantity	Cost
<u>Mixing and Pouring Concrete Blocks</u>		
Forms for concrete blocks and measuring box		
Cement		
Sand		
Clean water		
Engine oil		
Nails		
<u>Excavation and Building Foundation</u>		
Leveling stakes and wood for centering cross, etc.		
Concrete blocks		
Cement		
Sand		
Clean water		
<u>Prepare Mix and Pour Apron</u>		
Screeds		
Stakes		
Cement		
Rebar		
Tie-wire		
Sand		
Gravel (pea)		
Nails		
Rope		
<u>Headwall Construction</u>		
Cement		
Sand		
Concrete blocks		
Rebar		
Tie-wire		
Clean water		

Materials	Quantity	Cost
<u>Well Disinfection</u>		
Chlorine Compound		
Clean Water		
_____		
_____		
_____		

Activity/labor	*Skills	Number of persons	Time	Cost
Mix and pour concrete blocks				
Excavate and build foundation for apron				
Prepare for apron pour				
Mix and pour apron				
Headwall construction				
Water lifting device				
Well Disinfection				
Project clean up				
Transportation of materials				
Total Labor Cost				

*Mason, laborer, carpenter, etc.

Tools and Equipment	Quantity	Cost
Carpenter's levels		
Shovels, round-and flat-blade		
Buckets		
Hammers		
Crowbars		
Wheelbarrows		
Steel trowels		
Axes		
Metric tapes		
Pliers		
Paint brushes		
Plumb bobs		
Bar cutters or hacksaws		
Total Tools and Equipment Cost		

Total Project Cost

Materials
Labor
Tools and Equipment

Total

STEPS IN HEADWALL CONSTRUCTION

1. Carry the previously made concrete blocks to the apron and stack them near the headwall.

2. Mix the cement mortar (1 part cement to 3 parts clean sand with water, to form a workable paste). The mortar should be damp enough so that moisture will come to the surface when it is troweled with a steel trowel, but not wet enough to be sloppy or runny.

3. Carry the mortar to the headwall area and leave a portion of it there for the use of the groups which will be laying the blocks. Dampen the blocks before laying them.

4. To establish the inner edge of the headwall, measure 25 mm in from the inside face of the concrete block foundation and mark the spot on the apron surface.

5. Trowel a 15 cm wide layer of mortar on the apron surface starting from the mark set in Step 4 to form the bed for the first ring of concrete blocks in the headwall.

6. Place the first block on the mortar bed with the edge of the block set at the 25 mm mark. Settle the block into the mortar by moving it lengthwise.

7. Place a block at both ends of the block laid in Step 6 and settle it in place with the inner corners of the blocks touching.

8. As soon as the first three blocks have been laid by the first two teams, the other two teams should start laying blocks, one team at each end.

9. Continue until the first layer of concrete block has been laid.

10. As the blocks are laid fill the spaces between the ends of the blocks with mortar and trowel a bed of mortar on top of the first layer of blocks.

11. Clean off the excess mortar from the inner and outer surfaces of the wall. Using a trowel, smooth the joints in the outer wall so that they are even with the surface of the concrete blocks.

12. If the ends of the last two blocks laid in the first layer do not come together, it may be necessary to fill the gap with mortar or by using a small block in the wall (see Handout 9-3, Figure 2 which shows an adjustable form for making a small concrete block).

13. As the first layer is completed, place the next layer on it with the blocks placed as shown in the attached figure.

14. To make sure that the inside wall of the headwall is vertical, plumb up from the inner edge of the foundation wall and set the blocks in 25 mm from the plumb line.

15. Continue laying the blocks on a mortar bed and filling the spaces between the ends of the blocks until six layers have been placed, for a total height of about 0.9 meters. (NOTE: The number of layers and total height may be affected by the type of water-lifting device selected and the size of the concrete blocks).

16. Cap the top block of the headwall (see the figure). Bend 3 mm rebar into a circle so that it fits on the center of the top layer of blocks. Overlap the ends of the rebar 20 mm and tie it with tie-wire (optional).

17. Lay the circle on top of the headwall. Tie 15 mm pieces of 3 mm rebar to the circle so that they are forced into the mortar which has already been trammeled into the spaces between the ends of the top layer of blocks. The rebar circle should be 19 mm above the surface of the top layer of blocks. Use small stones to prop it up.

18. Trowel a thick layer of concrete along the centerline of the top layer of blocks and work it down to form a rounded surface 40 mm above the centerline of the top of the headwall. (This assumes the headwall is to be built with a rounded top for pulling buckets over the top.) The concrete for this mounded layer should be dry enough to stay in place as it is worked into shape.

19. Clean off both faces of the headwall and the surface of the apron as work progresses.

20. Cover the headwall with empty cement sacks and keep it moist for seven days.

21. Place a barrier of brambles around the headwall so that people and animals cannot push against it.

MATERIAL FOR ONE WELL

1.5 sacks of cement
4.5 sacks of sand
water
63 concrete blocks - 15 cm x 20 cm x 40 cm
5 meters of 10 mm rebar (optional)
2 meters of tie-wire

EQUIPMENT FOR ONE WELL

3 flat blade shovels
4 buckets (1 to carry the mortar from the mixing pad to the headwall area and 3 to hold the mortar as it is being used in laying the blocks)
1 mixing pad
3 steel trowels
1 pair of rebar cutters
2 pairs of pliers
2 plumb bobs

METHOD FOR CAPPING HEADWALL

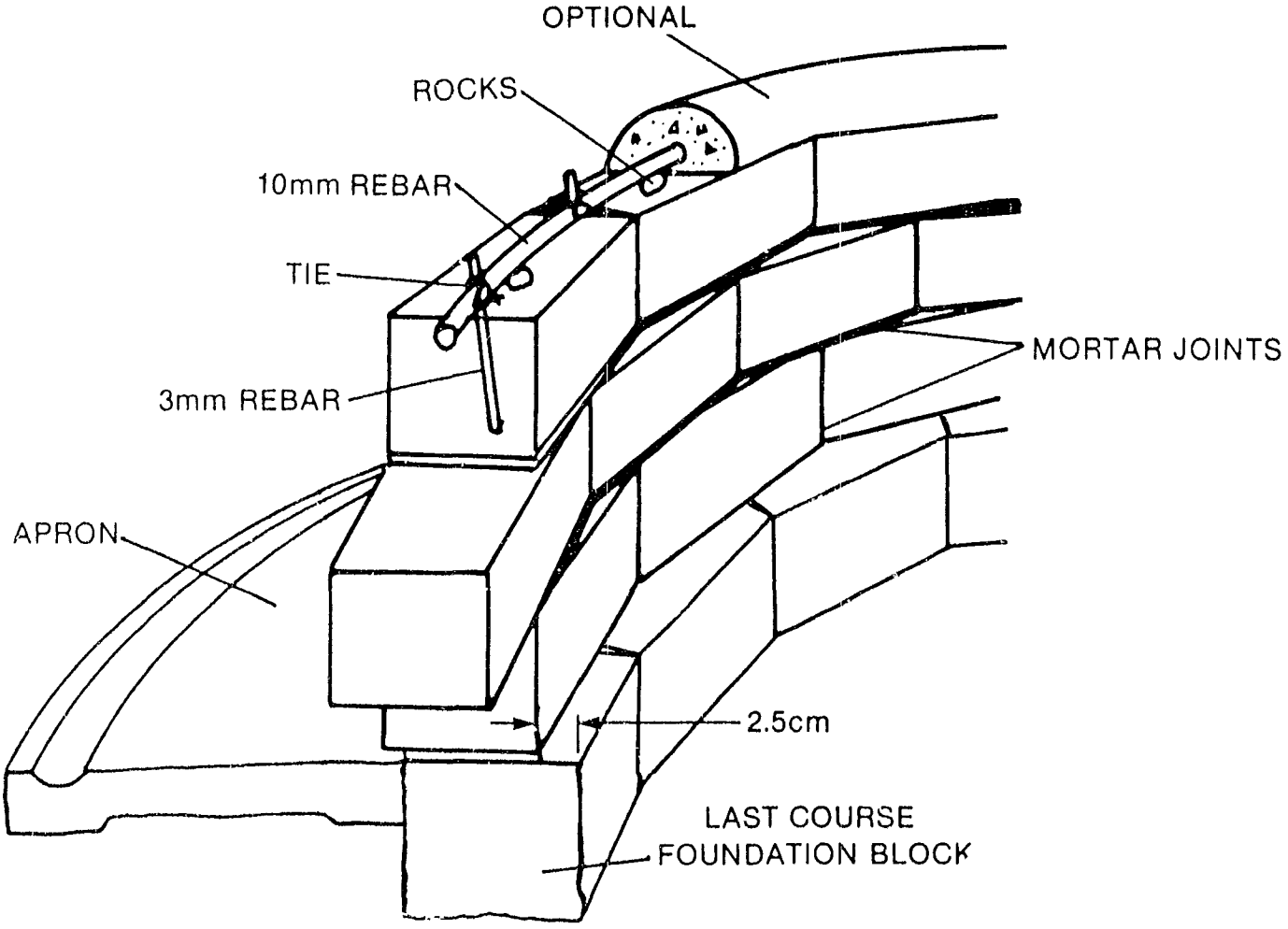

DRAINAGE DITCH CONSTRUCTION

This construction sequence is required only if the ground surface around the well is primarily level. In such an instance, elevation stakes must be set as a guide for digging the ditch to ensure that it slopes away from the apron appropriately. Where the ground surface is already sloped, a simple 25 cm wide x 25 cm deep ditch will provide adequate drainage.

Follow these steps to establish the elevation of the drainage ditch.

1. Set a 2.5 cm x 5 cm x 100 cm stake at the edge of the apron at the low point where the drainage channel drains from the apron. Next set 2.5 cm x 5 cm x 100 cm stakes at 250 cm intervals until four have been set in a line from the first stake to the low point where the water is to drain (see figure). When a carpenter's level is available, proceed as follows:

   a. Mark the first stake at the edge of the apron at the same level as the bottom of the exit from the apron drainage channel.

   b. Using a 5 cm x 10 cm x 260 cm straight-edge and the carpenter's level, hold the straight-edge with the top at the leveling mark on the first stake and mark the second stake at that same level. Measure 15 mm down from that leveling mark and mark the elevation. The second mark will then be the reference point for the next stake.

   c. Proceed in the same way to mark stakes 3, 4, and 5.

2. When a carpenter's level is not available, use a 1 meter length of hose full of water to level the 5 cm x 10 cm x 260 cm straight-edge and proceed as in Step 1a. The hose must be clear (translucent) so that the water level can be seen. Leveling is accomplished by holding the hose by each end and noting the water levels. The line connecting the two water levels at each end of the hose is a level line.

3. To establish the bottom of the ditch excavation, measure down 10 cm from the elevation mark. This shows how deep the ditch must be dug at each stake. The ditch should be at least 25 cm wide at the bottom with the walls sloping outward so that they will be stable.

4. If lining is necessary, it should extend 5 meters from the apron. It should cover the bottom of the ditch and extend up the sides about 20 cm. The lining may be made of the following materials.

   o <u>Masonry to conform with the shape of the ditch</u>. The ground should be moistened and the stones or slabs for the masonry should be laid on a mortar bed. The joints between the masonry should be filled with mortar. The masonry lining should be

approximately 15 cm thick with the upper surface smooth to allow the drainage water to flow freely.

- Concrete (1:3:6) mixed fairly dry (so that a pile 25 cm tall will not slump to less than 20 cm). The bottom and sides of the ditch should be moistened and sprinkled with a thin layer of sand. The concrete should be mixed and shoveled into the ditch and troweled to a thickness of 15 cm. The thickness may be controlled by driving short lengths of scrap rebar into the ground, leaving 15 cm protruding. The concrete should be troweled to the tops of the rebars. The concrete lining should be finished with a wooden float to a smooth surface.

- The lining should be covered with empty concrete sacks or other material and brambles and kept moist for seven days.

MATERIAL FOR ONE DITCH LINED WITH CONCRETE

(Concrete lining is not necessary on impermeable ground.)

4 sacks of cement
12 sacks of sand
24 sacks of gravel
water
1 piece of wood - 5 cm x 10 cm x 260 cm (straight-edge)
5 pieces of wood - 2.5 cm x 5 cm x 100 cm

EQUIPMENT FOR ONE DITCH

2 pointed shovels
1 bucket
1 hammer
1 carpenter's level about 1 meter long (if not available, use a hose about 1 meter long)
1 mixing pad
1 wheelbarrow
1 one-cubic-meter measuring box
3 trowels

CONSTRUCTION OF DRAINAGE DITCH

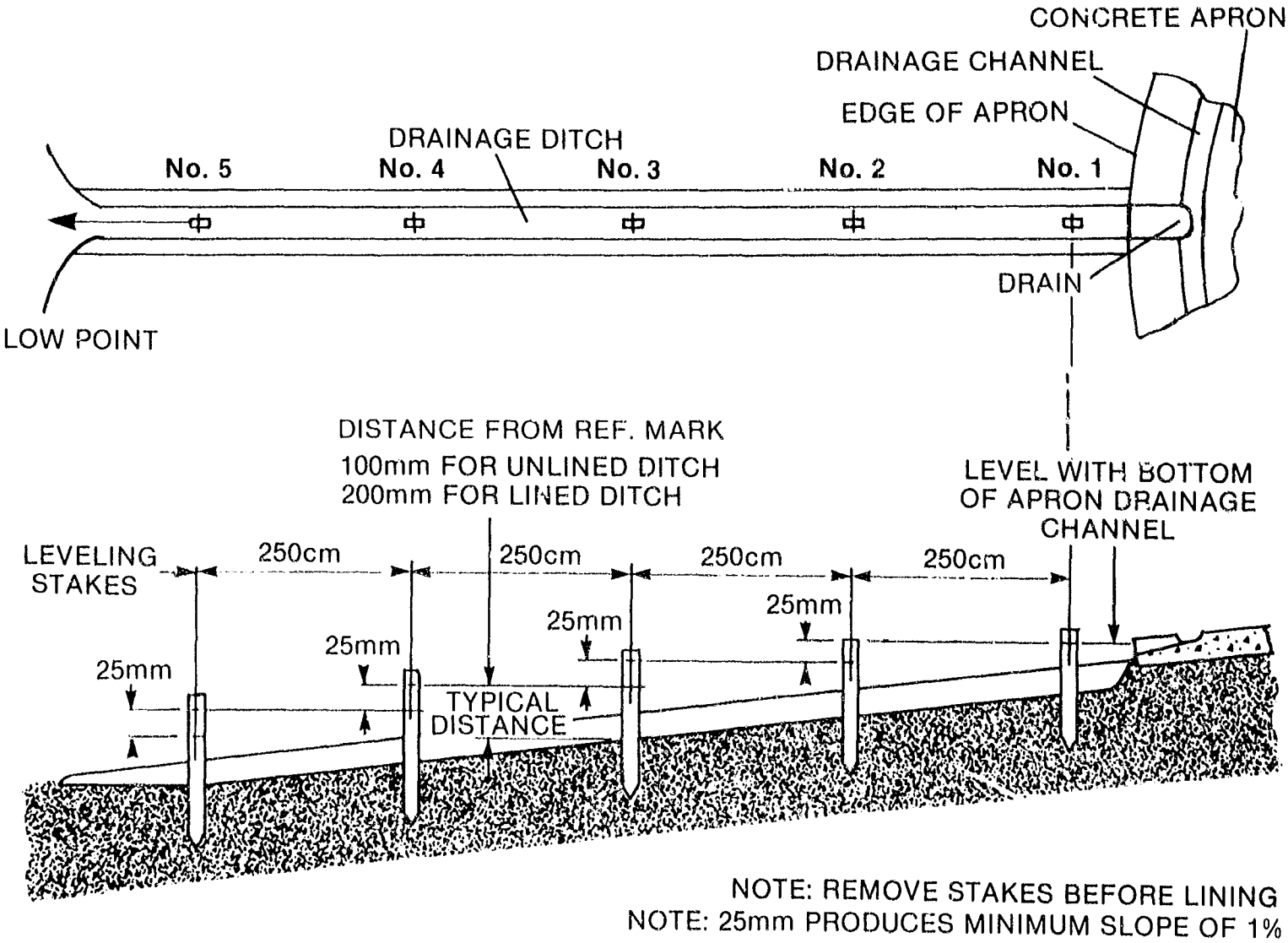

NOTE: REMOVE STAKES BEFORE LINING
NOTE: 25mm PRODUCES MINIMUM SLOPE OF 1%

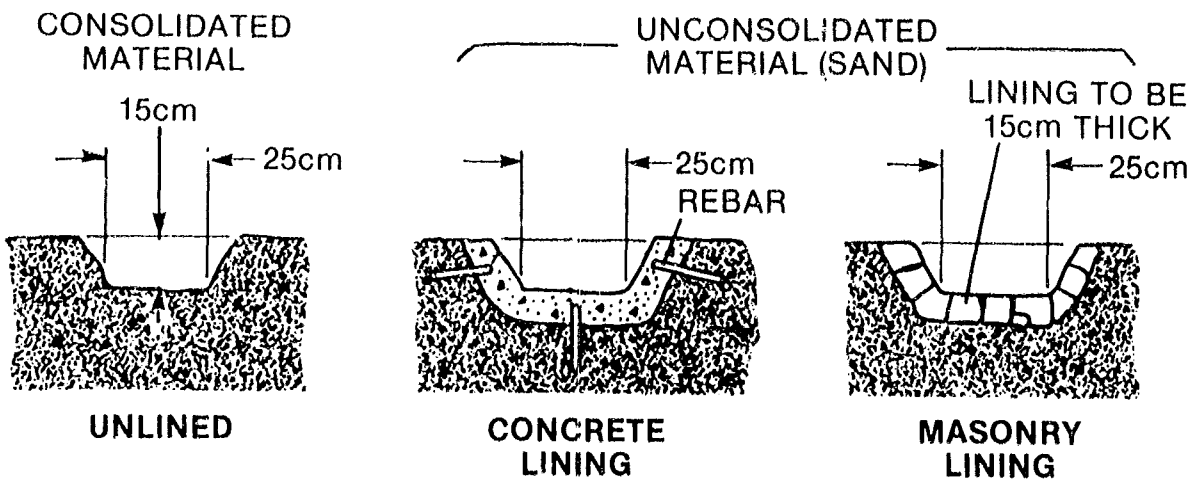

ALTERNATIVE DITCH CROSS SECTIONS

WELL CLEAN-UP AND DISINFECTION STEPS

1. Be sure the area around the protected well is left clean and free of construction debris. Dispose of excess materials either by destroying them or by turning them over to the village committee. Absolutely none of these materials should be thrown into the well.

2. If any construction debris has fallen into the well, make an attempt to fish it out. Use a hook made out of scrap rebar fastened to the end of a piece of rope for the larger pieces of debris and a bucket on the end of a rope for the smaller pieces.

3. Calculate the amount of disinfectant required for the well (see Handout 16-2).

4. Measure the required amount into a bucket.

5. If powdered chlorine disinfectant compound is to be used, dissolve it in a bucket of water before adding it to the well. It is important that the solution be prepared in a clean container and mixed with clean utensils. Dirt, grease, oil and organic matter will reduce the strength of the chlorine solution. Avoid the use of metal containers because the strong chlorine solution will cause them to rust. Instead, use plastic, ceramic, glass, or rubber-lined containers.

6. Slowly pour the required amount of disinfectant, as determined above, into the well. Allow the disinfectant to wash down the sides of the well. Use a brush to spread it on the walls of dug wells.

7. Stir the water in the well to make sure the disinfectant is thoroughly distributed.

8. Place conspicuous signs on the well warning people not to use the water for 24 hours. Place brambles over the well opening to prevent people from using the water until it is safe to drink.

9. Remove any left-over disinfectant and all containers used to mix it.

10. Wash and return whatever equipment was borrowed.

MATERIAL FOR ONE WELL

_____liters or grams of disinfecting material depending on the material available.

water as required

EQUIPMENT FOR ONE WELL

1 milliliter measuring cup or flask

1 balance (to be borrowed, not purchased)

1 bucket

1 stirring rod or stick

10 meters of rope

Water for the World

Disinfecting Wells

Technical Note No. RWS. 2.C.9

Disinfecting a well is necessary to ıiminate the contamination that was ıtroduced by equipment, materials, or ırface drainage during construction or ɜpairs. A chlorine compound is ɜnerally used for the disinfectant. ısinfecting a well involves calcu- ıting the required amount of chlorine ɔmpound, mixing a chlorine solution, ıd applying the solution to the well.

This technical note describes how to ısinfect a well. Read the entire ɜchnical note before beginning the ısinfection process.

seful Definitions

QUIFER - A water-saturated geologic ɔne that will yield water to springs ıd wells.

/AILABLE CHLORINE - The amount of ılorine present in a chemical com- ɔund.

ISINFECTION - Destruction of harmful ıcroorganisms present in water, ırough physical (such as boiling) or ıemical (such as chlorination) means.

aterials Needed

To disinfect a well, you will need:

Chlorine compound such as calcium ypochlorite, bleaching powder, or .quid bleach,

Mixing container which should be ıbber-lined or made from crockery or .ass,

Stiff broom with a long handle, for ınd dug wells,

Length of rope,

Length of perforated pipe, 0.5-1.0m ɔng, 50-100mm in diameter, for deep- 'illed wells with a high water table.

Caution!

Chlorine compounds or solutions may irritate skin and eyes upon contact. If possible, wear gloves, protective clothing, and glasses when handling chlorine. If you get chlorine on your skin or in your eyes, immediately wash it off with water.

General Information

The most easily obtainable and safest disinfectants are chlorine compounds. These compounds have various amounts of available chlorine, that is, chlorine that can be released to disinfect the water.

Calcium hypochlorite, also knows as high-test hypochlorite or HTH, has 70 per ent available chlorine. It is produced as powder, granules, or tablets. Bleaching powders have 25-35 percent available chlorine. Common household laundry bleach, such as Clorox and Purex, has about 5 percent available chlorine.

Chlorine compounds should be stored in their original containers in a cool, dark place.

Calculating the Amount of Compound Needed

To disinfect a well properly, make a mix of available chlorine and water from the well in a ratio of 100 parts per million, ppm. To illustrate: 1 ml per 1000 liters equals 1 ppm; 100ml per 1000 liters equals 100ppm.

Table 1 shows the amounts of HTH, bleaching powder, and chlorine bleach that must be added to various volumes of well water to produce 100ppm of available chlorine. Before you can use the table, you must calculate the volume of water in the well.

The volume of water in a well equals the radius of the well squared times the depth of the water in the well times 3.1416.

$$V = r^2 \times D \times 3.1416$$

The radius, r, equals the diameter, d, of the well divided by two.

$$r = \frac{d}{2}$$

The diameter, d, can be measured directly or read from design drawings or from the driller's log described in "Maintaining Well Logs," RWS.2.C.6.

The depth, d, of the water in the well can be measured directly by lowering a rock tied to a length of twine to the bottom of the well, retrieving the twine, and measuring the wet portion. Or, it can be read from the driller's log.

For example, suppose the diameter of the well is 100mm (0.10m) and the depth of the water in the well is 12m. First, calculate the radius.

$$r = \frac{d}{2} \qquad r = \frac{0.10m}{2} \qquad r = 0.05m$$

Then calculate the volume of water

$$V = r^2 \times D \times 3.1416$$
$$V = 0.05m \times 0.05m \times 12m \times 3.1416$$
$$V = \text{about } 0.1m^3$$

See Worksheet A Lines 1-4.

From Table 1, you can see that in order to disinfect this well you would need to use 0.2 liters of chlorine bleach, 5 percent available chlorine, or 33 grams of bleaching powder, 30 percent available chlorine, or 14 grams of high-test hypochlorite, 70 percent available chlorine.

For another example, suppose the diameter of the well is 1.2m and the depth of the water in the well is 2.6m. The radius equals the diameter divided by two = $\frac{1.2m}{2}$ = 0.6m Now calculate the volume.

$$V = r^2 \times D \times 3.1416$$
$$V = 0.6 \times 0.6 \times 2.6 \times 3.1416$$
$$V = 2.9m^3$$

See Worksheet A, Lines 5-8.

From Table 1, you can see that the nearest volume to this is $3.0m^3$, so to disinfect this well you would need to mix in 6.0 liters of chlorine bleach, or 1010 grams of bleaching powder, or 433 grams of HTH.

Table 1. Amounts of Chlorine Compounds for Well Disinfection

Water in Well (m^3)	Liquid Bleach 5% available chlorine (liters)	Bleaching Powder 30% available chlorine (grams)	Calcium Hypochlorite (HTH) 70% available chlorine (grams)
0.1	0.2	33	14
0.12	0.24	40	17
0.15	0.3	51	22
0.2	0.4	68	29
0.25	0.5	86	37
0.3	0.6	100	43
0.4	0.8	133	57
0.5	1.0	170	73
0.6	1.2	203	87
0.7	1.4	233	100
0.8	1.6	267	113
1.0	2.0	334	143
1.2	2.4	400	173
1.5	3.0	500	217
2.0	4.0	670	287
2.5	5.0	860	367
3.0	6.0	1010	433
4.0	8.0	1330	567
5	10	1700	730
6	12	2000	870
7	14	2300	1000
8	16	2600	1130
10	20	3300	1430
12	24	4000	1730
15	30	5000	2170
20	40	6700	2870

Worksheet A. Calculating the Volume of Water in a Well

Drilled Wells

1. Diameter of well = $\frac{(100 \text{ mm})}{(1000 \text{mm/m})}$ = 0.10 m

2. Radius of well = $\frac{\text{Line 1}}{2}$ = $\frac{(0.10 \text{ m})}{2}$ = 0.05 m

3. Depth of water in well = 12 m

4. Volume of water in well = Line 2 x Line 2 x Line 3 x 3.1416 = 0.05 m x 0.05 m x 12 m x 3.14.6 = 0.09 m^3

Hand Dug Wells

5. Diameter of well = 1.2 m

6. Radius of well = $\frac{\text{Line 5}}{2}$ = $\frac{(1.2 \text{ m})}{2}$ = 0.6 m

7. Depth of water in well = 2.6 m

8. Volume of water in well = Line 6 x Line 7 x 3.1416 = 0.6 m x 0.6 m x 2.6 m x 3.1416 = 2.9 m^3

Mixing the Solution

Do not pour the chlorine compound directly into the well. It will not mix properly. First make a chlorine solution.

To make a chlorine solution from chlorine bleach, mix one part of bleach with one part of water, then pour the entire solution into the well. In the second example, this would mean mixing 6.0 liters of chlorine bleach with 6.0 liters of water and pouring 12.0 liters of chlorine solution into the well.

To make a chlorine solution with HTH or bleaching powder, first mix the compound with enough water to form a smooth paste, then mix the paste with water in the ratio of one liter of water per 15 grams of compound. To calculate the amount of water needed to make a chlorine solution, divide the amount of chlorine compound by 15. In the second example,

$\frac{1010 \text{ grams of bleaching powder}}{15 \text{ grams}}$ = 67 liters of water

$\frac{433 \text{ grams of HTH}}{15 \text{ grams}}$ = 29 liters of water

Mix the chlorine paste with the water for 10-15 minutes. Allow inert materials to settle and use only the clear chlorine solution. Discard the rest. Pour the clear chlorine solution, about 67 liters in the case of bleaching powder or about 29 liters in the case of HTH, into the well.

Do not mix chlorine solutions in metal containers. Mix them in clean containers that are rubber-lined or made from crockery or glass.

Disinfecting a Hand Dug Well

If the well has no cover, it should be disinfected every day, or as often as possible. If the well is covered it must be disinfected before the first use and every time it is opened for maintenance or repair.

For a dug well with pump and cover:

1. Prepare a chlorine solution to wash the inside of the well casing. Mix 10 liters of water with one of the following: 0.02 liters of chlorine bleach, or 3.3 grams of bleaching powder, or 1.4 grams of HTH.

2. Wash the exterior surface of the pump cylinder and drop pipe with the chlorine solution before they are lowered into the well.

3. Remove all equipment and materials that will not be a permanent part of the well.

4. Wash the inside surface of the well casing with a clean, stiff broom and the 10 liters of chlorine solution. See Figure 1.

5. Install the cover over the well.

6. Calculate the amount of chlorine solution needed to disinfect the well. Prepare the solution and poor it through the access hole in the cover, making sure that the solution covers as much of the surface of the water in the well as possible. See Figure 2.

7. Mix the chlorine solution with the water in the well by using a rope tied to a large, clean rock. Lower the rock into the well and move it up and down in the water.

8. Cover the access hole. Pump water from the well until you can smell chlorine.

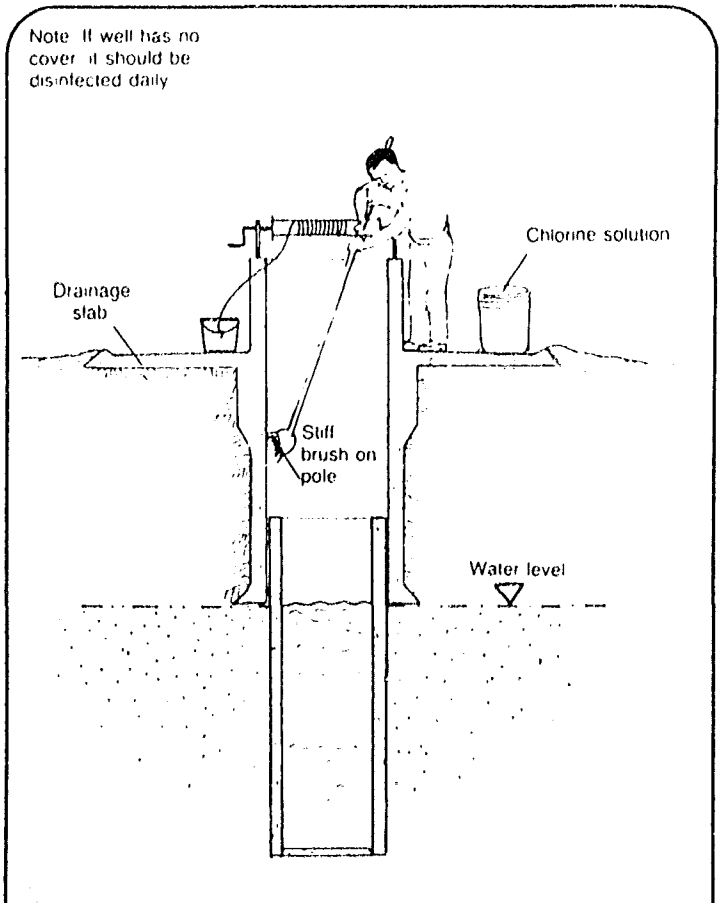

Figure 1. Washing Inside of Casing (Hand-dug well)

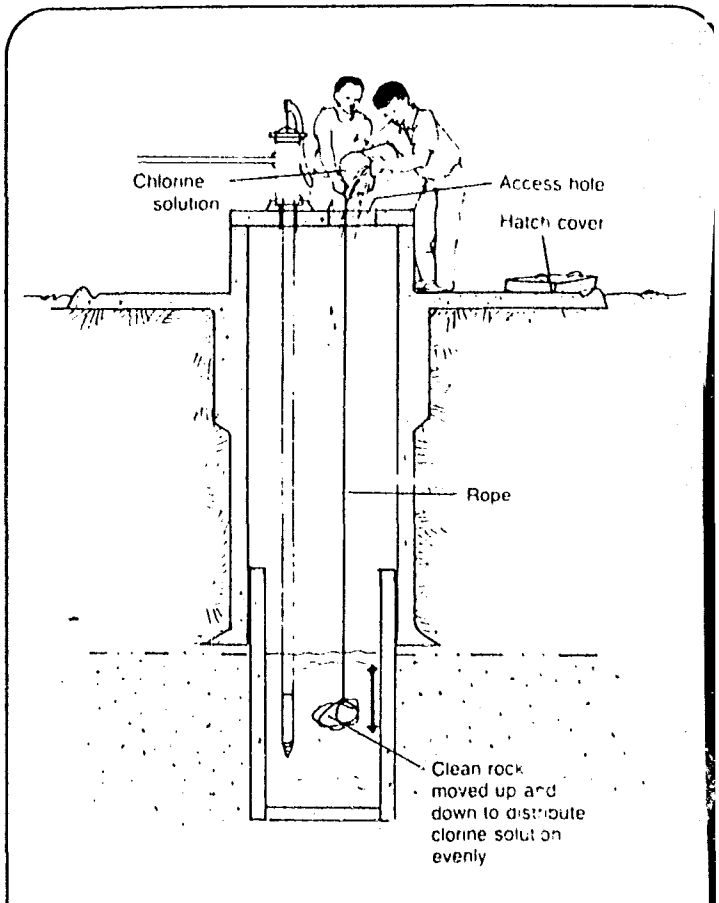

Figure 2. Pouring Chlorine Solution into Well

9. Allow the chlorine solution to remain in the well for 24 hours.

10. Pump water from the well until chlorine can no longer be smelled or tasted. Dispose of this water in a soakaway.

Disinfecting a Driven, Jetted, Bored, or Cable Tool Well

After the well has been tested for yield as described in "Testing the Yield of Wells," RWS.2.C.7, it must be disinfected before its first use and every time it is opened for maintenance or repair.

1. Remove the test pump from the well.

2. Calculate the amount of chlorine solution needed to disinfect the well. Prepare the solution and pour it into the well.

3. Mix the chlorine solution with ıe water in the well by using a rope ıed to a clean rock. Lower the rock ıto the well and move it up and down ı the water.

4. Add 40 liters of clean, chlori- ıted water to the well to force the ›lution into the aquifer. This solu- ıon can be made by mixing 40 liters of ıter with either one-half teaspoon of TH or 20ml of chlorine bleach.

5. Prepare a chlorine solution to ısh the pump cylinder and drop pipe. .x 10 liters of water with one of the ›llowing: 0.02 liters of chlorine .each, or 3.3 grams of bleaching ›wder, or 1.4 grams of HTH.

6. Wash the exterior surface of the ımp cylinder and drop pipe as they are ›wered into the well.

7. Pump water from the well until ›u can smell chlorine.

8. Allow the chlorine solution to ›main in the well for 24 hours.

9. Pump water from the well until ılorine can no longer be smelled or .sted. Dispose of this water in a ›akaway.

›ep Well with High Water Table

In the case of a deep well with a gh water table, you need to take spe- al steps to ensure that the chlorine d well water are properly mixed.

1. Drill a number of small holes rough the sides of the pipe that is 5-1.0m long and 50-100mm in diameter. p one end of the pipe.

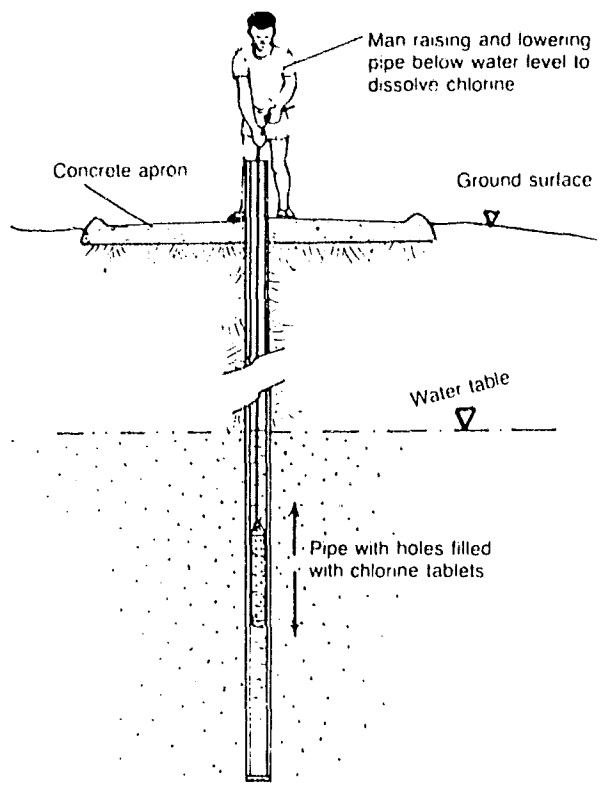

Figure 3. Disinfecting Deep Well with High Water Table

2. Pour the calculated amount of HTH granules or tablets into the pipe. Only HTH can be used in this method.

3. Fit the other end of the pipe with a threaded cap equipped with an eye loop.

4. Tie a rope to the eye loop, lower the pipe into the well, and alternately raise and lower the pipe in the water. Continue until the HTH has dissolved and the chlorine is distributed in the water. See Figure 3.

PROJECT EVALUATION CHECKLIST

Name_____
Date_____
Village_____

1. How adequate does the water appear to be for domestic use?

2. How adequate is the foundation and headwall? How does it take into account the needs and desires of the users?

3. How solid and impermeable is the apron?

4. Comment on the adequacy of the materials used.

5. How would you rate the finished area in terms of aesthetics and usefulness?

6. How adequate is the drainage?

7. How has the well been protected from contamination and surface water?

8. How adequate and useful is the water lifting device?

9. What arrangements have been made for follow-up site maintenance?

10. What plans have been made for a user education strategy?

11. Other comments.

PROJECT LEARNING WORKSHEET

The three most important things I learned during this project were:

Three things I would do differently next time are:

As a member of a construction team, I was effective when:

As a team member, I was not effective in the following circumstances:

MY WORK PLANS

GOAL

ACTIVITIES TO BE DONE	WHEN	WHO IS RESPONSIBLE	RESOURCES REQUIRED

WELL IMPROVEMENT WORKSHOP EVALUATION FORM

(Please do not sign your name)

A. Goal Attainment

Please indicate the degree to which the following workshop goals were achieved by putting a circle around the appropriate number on the scale.

1. Explain the benefits of improving wells.

1	2	3	4	5
Not very well				Very well

2. Work with village leaders and groups to initiate, implement, and follow through with a sanitary improvement project for dug wells.

1	2	3	4	5
Not very well				Very well

3. Assist villages to assess the need for improving well conditions and identify the major categories of improvements.

1	2	3	4	5
Not very well				Very well

4. Fabricate and make use of concrete blocks.

1	2	3	4	5
Not very well				Very well

5. Mix and pour concrete with appropriate reinforcement.

1	2	3	4	5
Not very well				Very well

6. Design and construct a headwall.

1	2	3	4	5
Not very well				Very well

7. Design and construct a sloped apron with adequate backfill and an appropriate structure for draining water.

1	2	3	4	5
Not very well				Very well

8. Develop user education strategies demonstrating clean water storage and handling techniques and well maintenance and usage.

1	2	3	4	5
Not very well				Very well

9. Estimate and plan the type, quantity, and basic costs of material and labor needed for a proposed project.

1	2	3	4	5
Not very well				Very well

10. Describe the importance of a continuing well maintenance program.

1	2	3	4	5
Not very well				Very well

11. Recognize construction problems in existing wells and determine if a structure should be repaired or replaced.

1	2	3	4	5
Not very well				Very well

B. Workshop Feedback and Learning

Please answer the following questions as fully as possible so that the trainers can determine how effective the workshop was.

1. What was the most positive thing about this workshop? Explain.

2. What was the most negative? Explain.

3. What stands out as most important? Explain.

4. What have you learned that you did not know before? Explain.

C. Workshop Organization and Training

1. What do you have to say about the way the workshop was planned and carried out?

2. What can be done to improve similar workshops?

3. What specifically do you need to learn more about in order to promote and develop a successful well improvement project in the future?

4. What comments do you have about the trainers?