Electric Power System Reliability

By
The Joint Research Team
Electric Power System
Project
Cairo University/MIT

Prepared by
Technology Adaptation Program
Massachusetts Institute
of Technology
Cambridge, Massachusetts
02139

Sponsored by
United States Agency for
International Development

PN-AAU-893

TAP Report 81-9 August 1981

PN-AAV-893
47196

Cairo University/Massachusetts Institute of Technology

Technological Planning Program

ELECTRIC POWER SYSTEM RELIABILITY

RESEARCH TEAM

Cairo University

S. El-Sobki
H. Anis
H. El-Kolaly
M. El-Sboki
A. Youssef
F. Fouad

Ministry of Electricity

H. El-Shaer
S. El-Beltagy
M. Zein-el-Din
H. Abdel Aziz

PROJECT ON

THE LONG TERM INVESTMENT PLANNING FOR

THE EGYPTIAN ELECTRIC POWER SYSTEM

PRINCIPAL INVESTIGATORS

Cairo University: M.S. Hussein, S. El-Sobki

M.I.T.: M. Weitzman, J. Kirtley

Ministry of Electricity: M.M. Abaza

INTRODUCTION

This report presents the results of the subproject on reliability analysis of the electric power system project at Cairo University sponsored by the Technical Adaptation Program. It is a compilation of four separate presentations by independent subgroupings of the reliability subproject.

The objective of reliability analysis is to determine the effect of possible failure of devices on the operation of an entire system and then to analyze economic decisions about how to expand the system, what equipment should be installed, what the best maintenance policy is, and so forth. The intent of the subproject was to provide the people who run the Egyptian power system with some modern analytic tools for evaluating the reliability of their power system and to encourage them in applying the tools to analyze real policy alternatives.

In the first section of this report electric power generation reliability is examined using a Monte Carlo method for determining loss of load probability. Forced outage of generation units is randomly simulated in compliance with the historical data of the units. The method is applied to determine the optimal period of time during which no maintenance can be performed on generation units due to low hydroelectric resources and high demand.

The second section deals with reliability of transmission systems. The loss of load probability is determined by simulating the random outages of lines using probabilities of outages determined by data concerning past outages. The method is shown as it was applied to the 220kV network in lower Egypt.

Reliability of transformer substations is treated in the third section of this report. Analysis of the reliability of parallel and series connections of components is used. The substation can be visualized as being in a number of distinct operating states depending on the operating condition of its components. The probability of the substation being in any of the states is found by a Markov process calculation. The method is applied to the Kafr El-Sheikh 55/11kV substation.

In the final section an algorithm is presented which determines loss of load probability and demand not served for a composit generation transmission power system. The Ford-Fulkerson approach is used where the minimal cutsets of a network are determined to provide information on the probability and frequency of failure. The maximum transmittable power can also be determined by this method. The algorithm is applied to the 220kV network of Egypt.

ELECTRIC POWER SYSTEM RELIABILITY

Table of Contents

INTRODUCTION

I. GENERATION RELIABILITY

1. Data Processing for Generation Reliability
2. Boiler-Turbine Model for Reliability Study
3. Correlated Load Demand in Lower Egypt
4. Generation System Reliability Using Monte Carlo Simulation
5. Calculation of Risk Index by Analytic Estimates

II. TRANSMISSION RELIABILITY

1. Data for RAMPOT Package
2. Algorithm for Random Modeling of Power Transmission Systems - RAMPOT
3. Applying the RAMPOT Algorithm to the 220kV Transmission Network

III. SUBSTATION RELIABILITY

1. Computerized Substation Reliability Evaluation - SUBSCOM
2. Cost Based Optimization of Substation Reliability
3. Data Acquisition and Application of Substation Reliability Evaluation in Egypt

IV. NETWORK RELIABILITY

1. Minimum Cutset/Maximum Flow Approach
2. Computer Algorithm - TRANSPO
3. Service Continuity Assessment for the 220kV Network of Lower Egypt

PREFACE

This report is one of a series of publications which describe various studies undertaken under the sponsorship of the Technology Adaptation Program at the Massachusetts Institute of Technology.

The United States Department of State, through the Agency for International Development, awarded the Massachusetts Institute of Technology a contract to provide support at M.I.T. for the development, in conjunction with institutions in selected developing countries, of capabilities useful in the adaptation of technologies and problem-solving techniques to the needs of those countries. This particular study describes research conducted in conjunction with Cairo University, Cairo, Egypt.

In the process of making this TAP supported study some insight has been gained into how appropriate technologies can be identified and adapted to the needs of developing countries per se, and it is expected that the recommendations developed will serve as a guide to other developing countries for the solution of similar problems which may be encountered there.

Fred Moavenzadeh

Program Director

LONG TERM INVESTMENT PLANNING OF THE EGYPTIAN ELECTRIC POWER SYSTEM

SECTION I

POWER SYSTEM RELIABILITY ASSESSMENT GENERATION RELIABILITY (I)

General Introduction

The main objective of any power system is to secure the timely supply needs of its consumers at:

- Minimum cost that satisfies a reasonable rate of return, and,
- satisfying an acceptable quality of supply.

The quality of supply is usually defined by a predefined range of voltage and frequency fluctuations, in addition to, an acceptable reliability level.

The reliability level of a supply is usually defined by the percentage of time the supply is available, which inturn depends upon the composite reliability of the supply network and the generation facilities.

There are several methods available to assess the reliability of either network or generation.

Few methods are now being tried to assess composite reliability.

Since generation cost is almost 50% of the total cost of a power system, then generation must be optimally planned to satisfy minimum cost at a predefined acceptable reliability level.

It should be noted that the higher the reliability level the bigger the generation capacity necessary to supply a fixed load, and consequently the higher generation investment will be.

On the other hand, the lower the reliability level, the higher the expected unserved energy which will adversely affect the Gross National Product (GNP).

It is, therefore, necessary to have an accurate efficient method of assessing generating reliability.

This volume of joint work between Cairo University, MIT, and the Ministry of Electricity, is dedicated to evaluate the effectiveness of the Monte-Carlo technique to assess generation reliability.

Report No. 1

DATA PROCESSING FOR GENERATION SYSTEM RELIABILITY

by

H. Anis, H. El-Kolaly, S. Beltagy

H. Abdel Aziz and M. Zein El-Dein

DATA PROCESSING FOR GENERATION SYSTEM RELIABILITY

1. GENERATION FACILITIES IN EGYPT

Drawing No.(1) illustrates the Egyptian existing as well as planned unified power system (UPS). The 500,220 and 132 KV transmission system and generating power stations are indicated.

The system is divided into five electric zones, namely: Upper Egypt zone, Cairo zone, Delta zone, Alexandria zone and the Canal zone.

The Upper Egypt zone has two large hydro electric power stations at Aswan, namely: Aswan Dam (7X40+2X11 MW) and High Dam (12X175 MW), in addition to Assiut (3X30MW) thermal power station.

This zone is interconnected through 500 KV transmission system with the Northern Egypt 220 KV system. The Northern Egypt power system in composed of 220 KV interconnected bulk transmission network. It has 10 thermal power stations having 41 generating units of total installed capacity amounting to 1300 MV.

The 500 KV system consists of two single circuit (each 788 km long) overhead transmission lines extending from Aswan to Cairo. This system has four transformer substations, namely: the High Dam 500/132 KV substation (HD) having 2 X 320 MVA auto transformers, the Nag-Hamadi 500/132 KV substation (NH) having 3 X 285 MVA auto-transformers and located 236 km to the north of the HD, the Samalut 500/132 KV substation having 1 X 285 MVA auto-transformer and located 343 km to the north of NH, and the Cairo terminal 3 X 500 MVA 500/220 KV substation located 209 km to the north of Samalut.

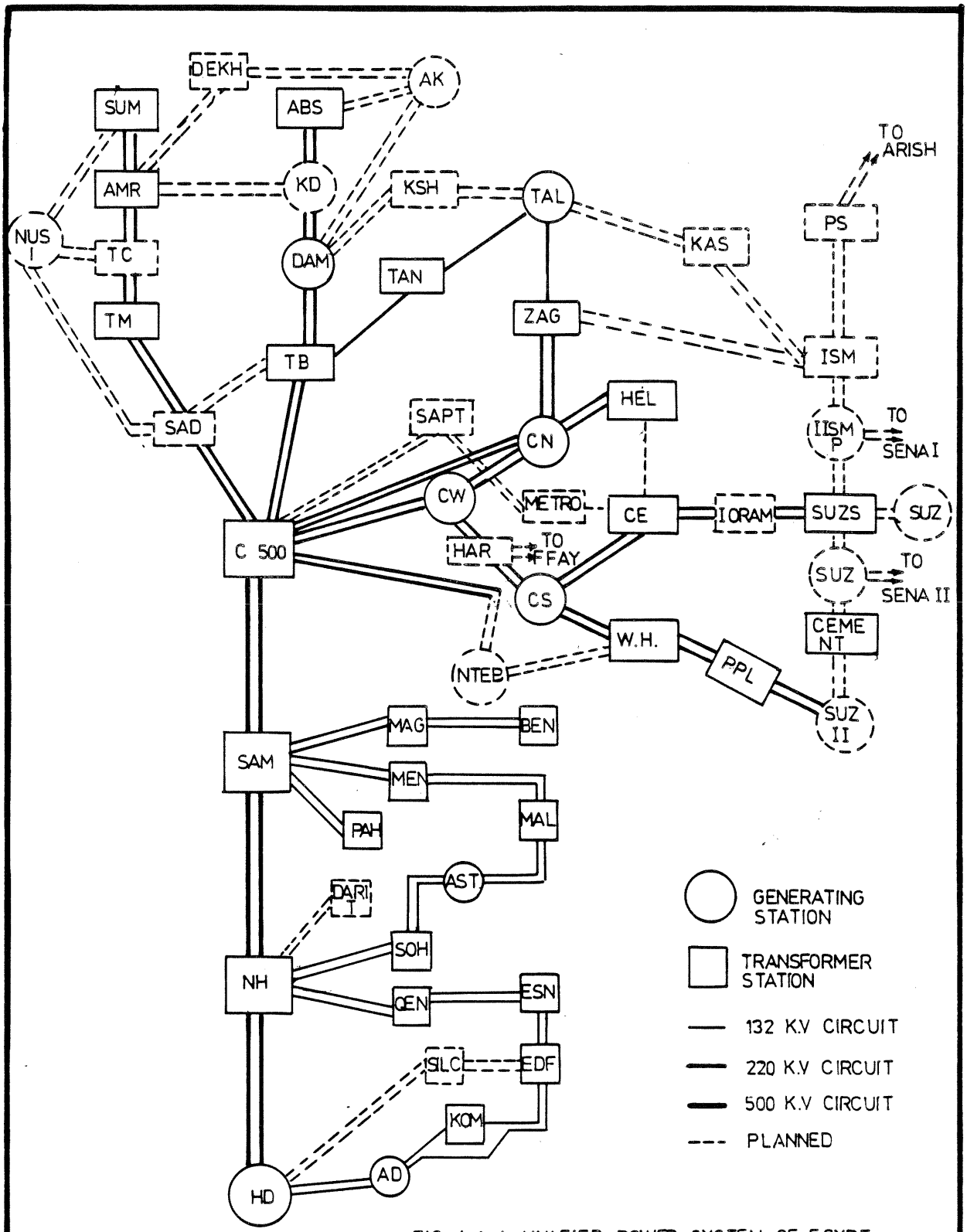

FIG. (1) UNIFIED POWER SYSTEM OF EGYPT

5. FREQUENCY AND DURATION PARAMETERS OF POWER STATIONS

The average operation time and repair time of each single turbine and boiler in each station of the Northern Egypt network are given in Table(5.1). in the year 1978.

Table (5.1)

Capacity, Average Operation Time and Repair Time of Turbines and Boilers in The System: in the year 1978 (G = Generator & B = Boiler).

Station	Type & No. of units	Capacity (MW)	Average down time (hr.)	Average up time (hr.)
1	G 1	12	69.49	3753.33
	G 2	12	42.79	5329
2	G 1	60	107.17	1407.33
	G 2	60	117.59	4179.83
	G 3	60	0.62	5017.00
	B 1	60	267.51	1478.67
	B 2	60	311.60	4669.83
	B 3	60	282.30	5025.5
3	G 1	60	56.25	2700.67
	G 2	60	112.79	3624.50
	G 3	60	55.16	5187.17
	G 4	60	151.30	4171.67
	B 1	40	113.82	3208.17
	B 2	40	83.05	4239.67
	B 3	40	4.64	3395.83
	B 4	40	116.00	2050.00
	B 5	40	146.09	3467.83
	B 6	40	105.72	2908.00
	B 7	40	322.75	3165.17
	B 8	40	168.16	2842.50
4	G 1	8	102.65	4041.00
	G 2	6	82.72	4337.83
	G 3	19	80.46	2988.83
	G 4	26	30.30	4441.83
	G 5	30	31.30	3635.00
	B 1	10	229.36	2748.00
	B 2	10	100.22	2774.83
	B 3	10	46.47	3481.83
	B 4	10	49.15	3275.33

Table (5.1) Continued

Station	Type & No. of units	Capacity (MW)	Average down time (hr.)	Average up time (hr.)
4	B 5	10	0.21	2727.17
	B 6	10	30.68	2285.00
	B 7	16	112.94	5475.00
	B 8	16	83.02	5121.83
	B 9	16	98.39	4317.17
	B 10	16	0.00	321.33
5	G 1	12.5	10.33	5619.83
	G 2	12.5	20.24	6511.83
	G 3	12.5	5.11	4675.00
	G 4	30	107.18	3383.5
	G 5	30	35.08	3701.17
	G 6	30	163.57	3180.67
	B 1	8	2.35	5108.00
	B 2	8	48.28	5877.00
	B 3	8	4.21	4642.00
	B 4	8	0.00	5405.50
	B 5	8	0.00	4153.83
	B 6	8	0.00	4737.50
	B 7	30	52.00	3172.5
	B 8	30	126.90	6007.33
	B 9	30	121.85	3851.00
6	G 1	15	11.97	4818.17
	G 2	15	116.10	2714.50
	G 3	65	6.73	4214.17
	G 4	65	22.45	3607.17
	G 5	65	67.50	3352.00
	B 1	13	63.02	4229.00
	B 2	13	84.12	2425.00
	B 3	13	56.06	3002.83
	B 4	65	3.63	4832.67
	B 5	65	157.48	3716.17
	B 6	65	37.97	2469.17
7	G 1	12	54.61	6563.33
	G 2	12	97.83	6310.67
	G 3	12	1.17	1904.50
	B 1	10	132.08	6062.33
	B 2	10	1.12	4892.00
	B 3	10	71.54	6499.33
	B 4	10	161.63	3848.33
	B 5	10	71.54	6499.33

4. UPDATED AVAILABLE POWER FROM EGYPTIAN POWER PLANTS

The active steam plants in the unified Power System include an unusually large number of generating units which compromise a total nameplate capacity of 3173 MW in 1981.

Table (4.1) shows the installed capacity of the existing generation plants in Northern Egypt, considering the Cairo - 500 KV station at the terminals of the 500 KV lines as one generating station of installed capacity 900 MW. Table (4.1) shows also the expected useable power capacity of these plants year by year through 1981.

Table (4.1)

Updated Available Power from Northern Egypt Power PLants

Code of Station	Installed Capacity (MW)	Available Capacity (MW)			
		1978	1979	1980	1981
1	2 X 14	2 X 12	2 X 12	2 X 12	2 X 12
2	3 X 87 1 X 87	3 X 60	3 X 60 1 X 87	3 X 60 1 X 87	3 X 85 1 X 87
3	4 X 60	2 X 50 2 X 60	2 X 50 2 X 60	2 X 50 2 X 60	2 X 60 2 X 60
4	2 X 30 1 X 20 2 X 10 1 X 23	1X26+1X30 1 X 19 1X8+1X6	1X26+1X30 1 X 19 1X8+1X7 1 X 20	1X26+1X30 1 X 19 1X8+1X7 1 X 23	1X26+1X30 1 X 19 1X8+1X7 1 X 23
5	3 X 12.5 3 X 30	3 X 12.5 3 X 30	3 X 12.5 3 X 30	3 X 12.5 3 X 28	3 X 12.5 3 X 28
6	3 X 65 2 X 15	3 X 65 2 X 15	3 X 65 2 X 15	3 X 65 2 X 15	3 X 65 2 X 15
7	3 X 15 2 X 23	3 X 12	3 X 12 2 X 23	3 X 12 2 X 23	3 X 12 2 X 23
8	2 X 30 2 X 26.5	2 X 18.5 2 X 14	2 X 20 2 X 18	2 X 30 2 X 26	2 X 30 2 X 26
9	4 X 16 2 X 12.5	4 X 8	4 X 8 2 X 12.5	4 X 8 2 X 12.5	4 X 8 2 X 12.5
10	4 X 25 1 X 17	1 X 15	2 X 25 1 X 15	4 X 25 1 X 15	4 X 25 1 X 15
11	1 X 23	1 X 20	1 X 20	1 X 20	1 X 20
12	1 X 900	1 X 900	1 X 900	1 X 900	1 X 900
13	1 X 23		1 X 20	1 X 20	1 X 20
14	2 X 110		1 X 110	2 X 110	2 X 110
15	5 X 23			5 X 23	5 X 23
16	8 X 23			8 X 23	8 X 23
17	3 X 12.5			3 X 12.5	3 X 12.5
18	2 X 23		2 X 20	2 X 20	2 X 20
19	1 X 23			1 X 23	1 X 23
20	4 X 50				4 X 50
21	1 X 23			1 X 23	1 X 23

The Upper Egypt 132 KV system consists of 930 route kilometers of double circuit 132 KV overhead transmission lines.

2. GENERATION SYSTEM RELIABILITY ASSESSMENT

To assess the reliability of generation in the ARE power system the generation in Upper Egypt shall be under special consideration. This is due to the fact that the generation capacity in the UE zone is exceeding the transmission limits by stability. Under such circumstances and taking the fact that the power transmission to Cairo over the 500 KV system has never been due to lacke of generating units at HD, the UE zone can be considered in generation reliability calculations as one generation source situated at the Cairo terminal of the 500 KV line. The amount of that power is taken equal to the stability limit of the line.

To estimate the availability of this source, the availability of both High Dam station and the Aswan-Cairo 500 KV line had to be considered. The former was found to be almost 100% which leaves the latter to yield the availability at this source point.

3. FORCED OUTAGE RATE OF 500 KV LINES

As mentioned in the previous section, two 500 KV transmission lines extend from H.D. station to C 500 KV substation, a distance of 788 route kilometers. There are two intermediate substations, one at N.H. with three 285 MVA, 500/132 KV autotransformer banks, and one at SAM with a 285 MVA, 500/132 KV transformer bank. Three 500 MVA, 500/220 KV autotransformer banks

intrerconnect the 500 KV and 220 KV systems at C 500 substation. Shunt reactors at H.D., N.H., SAM, and synchronous condensers at C 500 provide voltage control for the 500 KV system.

The foremost problem is the possibility of outages on the 500 KV lines between the H.D. and C 500. The power transferred from H.D. to C 500 was limited to 900 MV for the conditions of the UPS during 1978.

During the period between 1975 and 1978, the outages of the two 500 KV lines at the same time are as follows:

a) The section (N.H.-SAM) had two interruptions in the same day (29/3/76), the durations are 25, 19 minutes.

b) The section (SAM - C 500) had three interruptions:

   1) In 11/4/1976 with duration 10 minutes.

   2) In 18/5/1976 with duration 9 minutes.

   3) In 20/8/1976 with duration 23 minutes.

The duration of the forced outages of the 500 KV transmission lines over the four years is 1.433 hours.

$$\therefore \text{ The forced outage rate (F.O.R.)} = \frac{1.433 \text{ hour}}{4 \text{ years}}$$

$$= \frac{1.433}{4 \times 8760} = 4.1 \times 10^{-5}$$

Therefore, in the reliability of generation model, a 900 MV power source is said to be available to supply Lower Egypt from Upper at a forced outage of 4.1×10^{-5}.

$$A_t \quad A_b = (1-f)^{N_b}$$

where f is the FOR of the new genrating units whose number is N_b

$$f = 1 - (A_t \quad A_b)^{1/N_b}$$

VERIFICATION

The fitting procedure of the availability distribution was based on "equal full power availability" principle. To substantiate that the use of such a principle actually reproduces the availability distribution an example is given:

Data of Actual Power Station

* Eight boilers feed, on a common header, four turbines.
* FOR of one boiler = 0.0403
* FOR of one turbine = 0.0234
* Station power rating = 2 X 60 + 2 X 50 = 220 MW
* Rating of turbines = 2 X 60MW + 2 X 50 MW
* Rating of boilers = 8 X 30 MW

Model

The model of that station should have 8 "generation units" equal to the number of boilers,

capacity of one generation unit $= \frac{220}{8} = 27.5$ MW

* Availability of full turbine power:

$$A_t = (1-0.0234)^4 = 0.9097$$

Availability of Full Boiler Power:

Since boiler capacity (240MW) is only slightly larger than turbine capacity (220MW), all boilers must be operating to allow for full power from the station.

Therefore,

$$A_b = (1-f_b)^{N_b} \quad \text{only}$$

$$= (1-0.0403)^3 = 0.7199$$

The forced outage rate of one equivalent generation unit is, therefore,

$$f = 1-(A_t\ A_b)^{1/N_b}$$

$$= 0.0515$$

In Fig.(1) the availability distribution of the original power station as obtained by combinational probability rules and that of the model equivalent generation units are plotted. The match is obvious particularly at the marked probability values.

RESULTS

Table (1) lists the model generation units characteristics for the power stations of Lower Egypt.

Table (2) represents the capacity and FOR of the new generating units of Lower Egypt's power stations on the year of 1978.

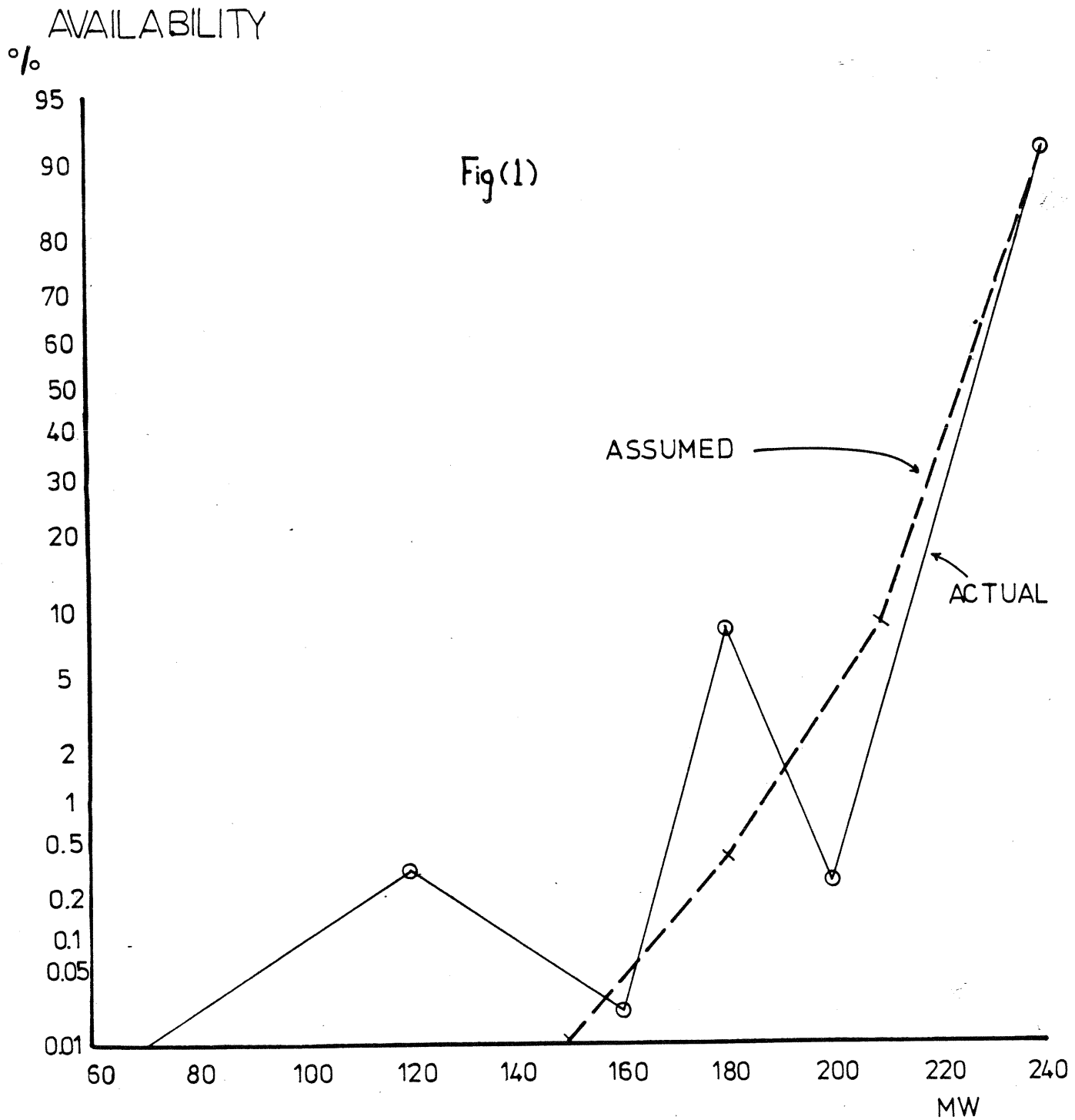
AVAILABILITY
%
95
90
80
70
60
50
40
30
20
10
5
2
1
0.5
0.2
0.1
0.05
0.01
60
80
100
120
140
160
180
200
220
240
MW
ASSUMED
ACTUAL

Fig(1)

TABLE (1)

Characteristics of Model

Generation Units

Station	Available capacity (MW)	FOR/unit	Availability of full capacity
1	6 X 6.67 4 X 12.5	0.0117 0.0226	0.9883 0.9125
2	3 X 8.67 3 X 60	0.0316 0.0262	0.9082 0.9235
3	7 X 6.86	0.0216	0.8648
4	8 X 27.5	0.0515	0.9097
5	5 X 19.6	0.011	0.9463
6	4 X 9	0.0245	0.9056
7	3 X 60	0.0909	0.7514
8	6 X 6 3 X 28	0.0029 0.051	0.9942 0.8551
9	1 X 900	0.000041	0.999959
10	2 X 13	0.0122	0.9757

PMFN = Expected load duration curve for the 1,2, 10 & 11th months of the studied year.

RIS = A subroutine which gives the risk index, power and energy loss over the given period for the given loads and capacities.

RISK = Risk index during December

RISA = Risk index during the 1,2 , 10 & 11th months

RISF = Risk index during the 3,4,5,6,7,8 & 9th months

R = Average risk index over the studied year

ST = Preceding random number for selection

X = Random number generated for load selection

MAINT = Array representing the generating units on scheduled maintenance.

NØMAINT = Indicator if the maintenance is allowed or not during the period under study,

NK = Determines the power transferred from Upper to Lower Egypt (either 800 MW or 900 MW).

SUMMAN = Sum of the capacity of generating units on scheduled maintenance.

B = Total capacity of units out of service

AC = Avaialble capacity

PLØSS = Power loss

ENERGY = Energy loss

S = Initial value of the random number generator used to determine the generating units on scheduled maintenance.

XI = Initial values of random number generators used to check the availability of the generating units

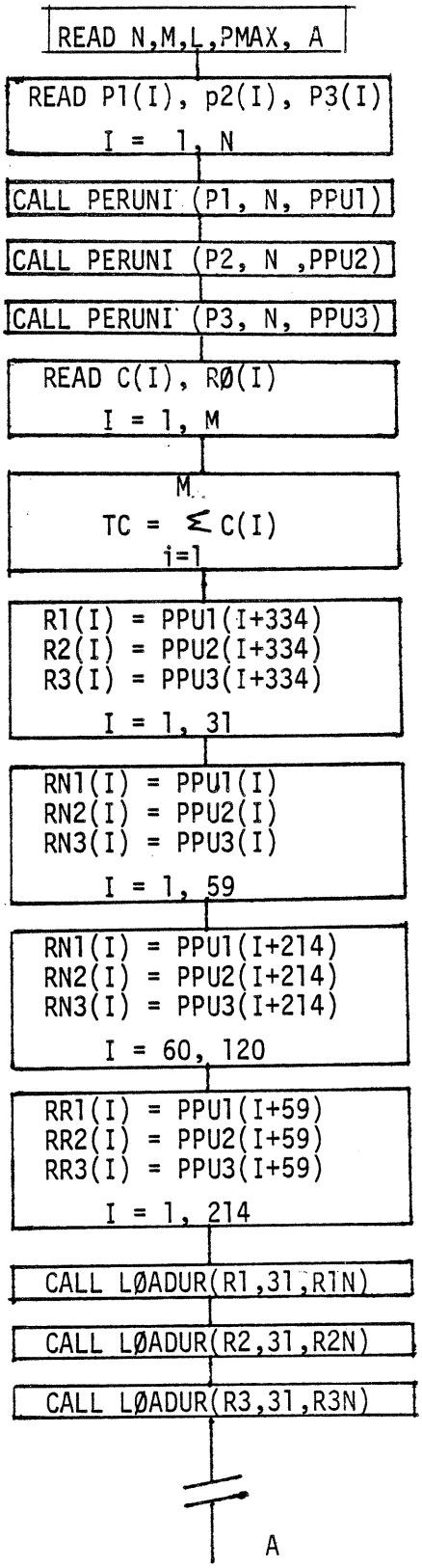
READ N,M,L,PMAX, A
READ P1(I), p2(I), P3(I)
I = 1, N
CALL PERUNI (P1, N, PPU1)
CALL PERUNI (P2, N ,PPU2)
CALL PERUNI (P3, N, PPU3)
READ C(I), RØ(I)
I = 1, M
TC = Σ C(I)
i=1
M
R1(I) = PPU1(I+334)
R2(I) = PPU2(I+334)
R3(I) = PPU3(I+334)
I = 1, 31
RN1(I) = PPU1(I)
RN2(I) = PPU2(I)
RN3(I) = PPU3(I)
I = 1, 59
RN1(I) = PPU1(I+214)
RN2(I) = PPU2(I+214)
RN3(I) = PPU3(I+214)
I = 60, 120
RR1(I) = PPU1(I+59)
RR2(I) = PPU2(I+59)
RR3(I) = PPU3(I+59)
I = 1, 214
CALL LØADUR(R1,31,R1N)
CALL LØADUR(R2,31,R2N)
CALL LØADUR(R3,31,R3N)
A

$$z = \frac{\frac{1}{2}\ln\frac{1+r}{1-r} - \frac{1}{2}\ln\frac{1+\rho}{1-\rho}}{1/\sqrt{n-3}}$$

$$= \frac{\sqrt{n-3}}{2}\ln\frac{(1+r)(1-\rho)}{(1-r)(1+\rho)}$$

can be looked upon as a value assumed by a random variable having approximately the standard normal distribution. Using this approximation, we can calculate confidence intervals for ρ.

The 95 % confidence limits of the correlation coefficient were calculated (based on 36-point population) to be

$$0.75 < \rho = 0.84 < 0.92$$

In the figure, the typical profile based on every 10-day measurement is plotted for 1976, 1977 and 1978. As seen in another report of this series, this profile are associated with the availability of generation resources to select the months of maintenance.

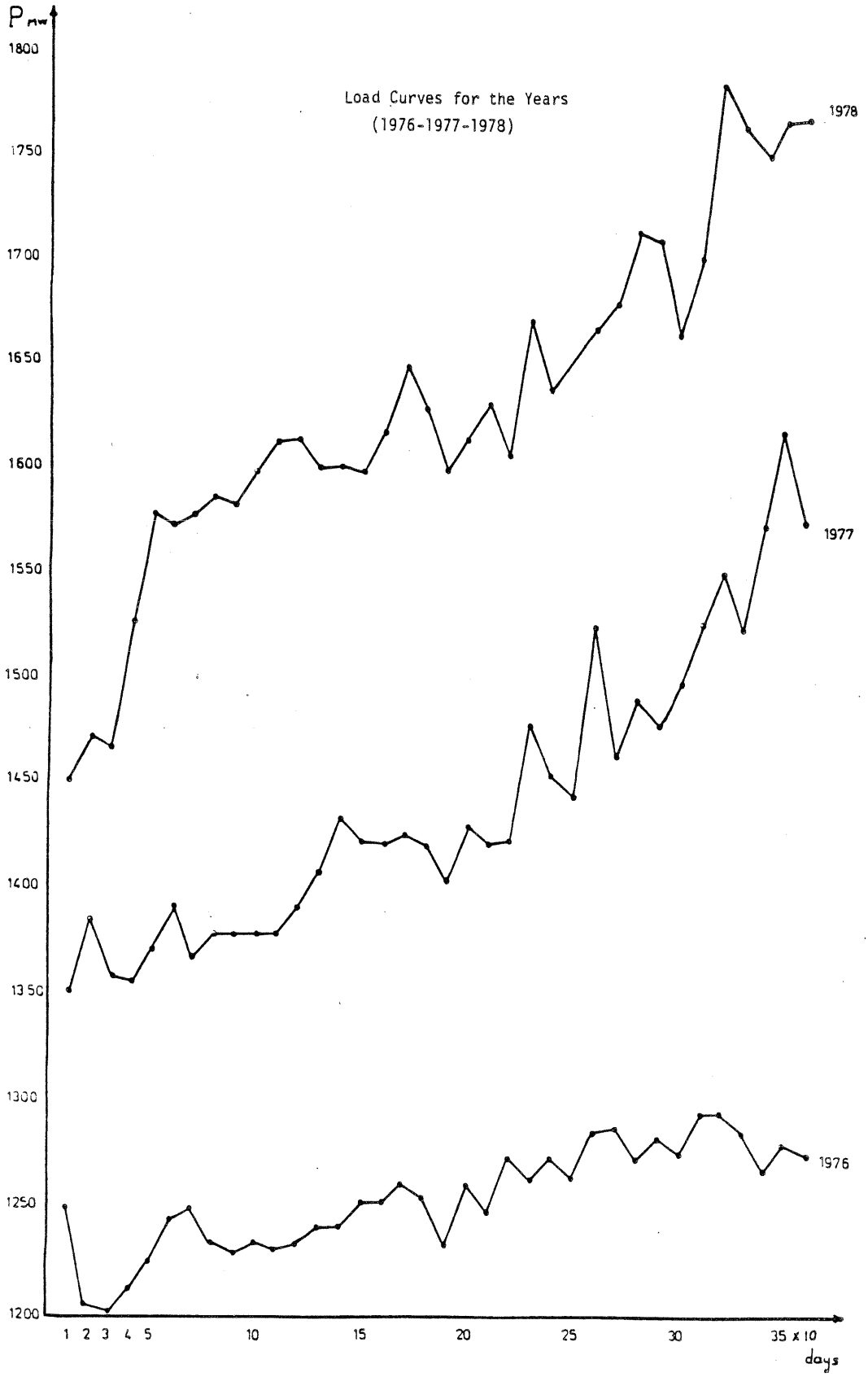
Load Curves for the Years
(1976-1977-1978)
P mw
1800
1750
1700
1650
1600
1550
1500
1450
1400
1350
1300
1250
1200
1978
1977
1976
1 2 3 4 5
10
15
20
25
30
35 x 10
days

List of Symbols

N = No. of intervals on the load curve

M = No. of generating units

L = No. of shots.

A = Per unit power unavailable due to maintenance

PMAX = Maximum power demand of the year

P1 = Array representing the load curve of the first year, formed of 365 points of daily peak.

P2 = Array representing the load curve of the second year , formed of 365 points of daily peak

P3 = Array representing the load curve of the third year, formed of 365 points of daily peak

PERUNI = A subroutine which transfers the given load curve to a per unit load curve w.r.t. its own peak.

PPU1 = Load curve array of the first year in per unit w.r.t. its own peak

PPU2 = Load curve array of the second year in per unit w.r.t. its own peak

PPU3 = Load curve array of the third year in per unit w.r.t. its own peak

C = Capacity array of generating units

RØ = Forced outage array of generating units

TC = Total available capacity ($\Sigma C(I)$)

R1 = Per unit load curve during December of the first year

R2 = Per unit load curve during December of the second year

R3 = Per unit load curve during December of the third year

RN1 = Per unit load curve during October, November, January and February of the first year.

RN2 = Per unit load curve during October, November, January and February of the second year.

RN3 = Per unit load curve during October, November, January and February of the third year.

RR1 = Per unit load curve for the 3,4,5,6,7,8&9th months of the first year

RR2 = Per unit load curve for the 3,4,5,6,7,8&9th months of the second year

RR3 = Per unit load curve for the 3,4,5,6,7,8&9th months of the third year

LØADUR = A subroutine used to obtain the load duration curve from a given load curve.

R1N = Per unit load duration curve for the month of December of the first year

R2N = Per unit load duration curve for the month of December of the second year.

R3N = Per unit load duration curve for the month of December of the third year

PMF = Expected load duration curve for the month of December of the studied year

RR1N = Per unit load duration curve for the 3,4,5,6,7,8&9th months of the first year.

RR2N = Per unit load duration curve for the 3,4,5,6,7,8&9th months of the second year.

RR3N = Per unit load duration curve for the 3,4,5,6,7,8&9th months of the third year.

PMA = Expected load duration curve for the 3,4,5,6,7,8&9th months of the studied year.

RN1N = Per unit load duration curve for the 1,2,10, & 11th months of the first year.

RN2N = Per unit load duration curve for the 1,2,10 & 11th months of the second year.

RN3N = Per unit load duration curve for the 1,2,10 & 11th months of the third year.

Report No. 4

GENERATION SYSTEM RELIABILITY ASSESSMENT USING MONTE-CARLO SIMULATION

by

H. Anis, H. El-Shaer, H. El-Kolaly, S. El-Beltagy

GENERATION SYSTEM RELIABILITY ASSESSMENT USING MONTE-CARLO SIMULATION

INTRODUCTION

The Monte-Carlo technique is used to simulate the random events in both generation and demand. Randomness of generation status stems from the independent forced outages of the power stations, while that of load is expressed by the annual load curve. The latter is based on peak daily loads.

A computer package is compiled which simulates the above two events and calculates principally the "Risk Index" or the simulated loss of load probability. The package is written in FORTRAN language.

FUNCTION

1. By using random number generators, the package simulates:

a- The forced outage of Egypt's generation units. The random number acts as a selector deciding whether a particular units is facing forced outage or not.

b- The annual load variation based on daily peak load. The random number generator selects the load level at a given random instant.

usually denoted by the letter r and its calculation is facilitated by use of the formula

$$r = \frac{n.\sum_{i=1}^{n} x_i y_i - (\sum_{i=1}^{n} x_i)(\sum_{i=1}^{n} y_i)}{\sqrt{n.\sum_{i=1}^{n} x_i^2 - (\sum_{i=1}^{n} x_i)^2}\sqrt{n.\sum_{i=1}^{n} y_i^2 - (\sum_{i=1}^{n} y_i)^2}}$$

The parameter ρ is a measure of the strength of the linear relationship between x and y. When $\rho = 0$, the two random varaiables are uncorrelated, and in the case of the bivariate normal distribution they are also independent. If the points (x_i , y_i) actually fall on a straight line, then r equals +1 or -1, depending on whether this line has a positive or negative slope. The correlation analysis was repeated three times as follows:

1- on daily basis, i.e., using 365 load values for each year.

2- on 3-day basis : This was made to rid the first correlation of the effect of week ends. This was done by selecting for the correlation analysis the largest load of each successive 3 days.

3- on 10-day basis: In Egypt, many religious occasions are celebrated according to the lunar calender which shifts every year by some 11 days from the solar one. To account for the biased variations in load due to these occasions, a 10-day-based correlation was also made.

RESULTS

The table shows the results of these analyses:

Correlation Coefficient of

Variations in Annual Load Pattern

Basis	1976/77	1977/78
1-day	+ 0.25	+ 0.51
3-day	+ 0.50	+ 0.69
10-day	+ 0.77	+ 0.84

CONCLUSIONS

1- All correlation coefficients are positive indicating a predictable behavior of load pattern.

2- The strongest correlation is found between loads measured on 10-day basis. This may thus be taken to represent the sought typical pattern.

Since the sampling distribution of r for random samples from bivariate normal populations is rather complicated, it is customary to base tests concerning ρ on the statistic $\frac{1}{2} \ln \frac{1 + r}{1 - r}$. It can be shown that for random samples from bivariate normal populations the distribuion of $\frac{1}{2} \ln \frac{1 + r}{1 - r}$ is approximately normal with the mean $\frac{1}{2} \ln \frac{1 + \rho}{1 - \rho}$ and the variance $1/(n - 3)$. In other words,

Report No. 3

CORRELATION LOAD DEMAND IN LOWER EGYPT

by

H. Anis

CORRELATED LOAD DEMAND IN LOWER EGYPT

INTRODUCTION

Lower Egypt is the major consumer of electric energy. The reliability of generation studies is thus concentrated in this vital area. One major issue facing the electric energy planner is the search for an optimal maintenance schedule for the generation stations which would achieve two purposes:

1- Avoid excessive load loss (service interruption).

2- Fulfill periodic maintenance requirement as dictated by the manufacturer on one hand and by service conditions on the other.

One way of achieving this goal is the careful inspection of the annual load variation profile and using it together with the availability generation resources as a basis for maintenance scheduling.

This report inspects the load demand profile for three successive years. A correlation analysis among the three profiles is made in search for a "typical" load profile.

ANALYSIS

Given the load variations of the years 1976, 1977 and 1978, the correlation analysis is made for each two in succession.

The estimate $\hat{\rho}$, called the sample correlation coefficient, is

Table (2)

UNIT CODE	CAPACITY (MW)	FORCED OUTAGE RATE
101	12	0.0122
102	12	0.0122
201	60	0.0909
202	60	0.0909
203	60	0.0909
301	27.5	0.0515
302	27.5	0.0515
303	27.5	0.0515
304	27.5	0.0515
305	27.5	0.0515
306	27.5	0.0515
307	27.5	0.0515
308	27.5	0.0515
401	5.5	0.0145
402	5.5	0.0145
403	5.5	0.0145
404	5.5	0.0145
405	5.5	0.0145
406	5.5	0.0145
407	14	0.0227

Table (2) Cont.

UNIT CODE	CAPACITY (MW)	FORCED OUTAGE RATE
408	14	0.0227
409	14	0.0227
410	14	0.0227
501	6.25	0.0029
502	6.25	0.0029
503	6.25	0.0029
504	6.25	0.0029
505	6.25	0.0029
506	6.25	0.0029
507	30	0.051
508	30	0.051
509	30	0.051
601	10	0.0316
602	10	0.0316
603	10	0.0316
604	65	0.0262
605	65	0.0262
606	65	0.0262
701	6	0.0065
702	6	0.0065

BOILER-TURBINE MODEL FOR RELIABILITY STUDY

INTRODUCTION

In the study of the generation reliability in Lower Egypt, it must be realized that all such generation is thermal to which the contribution of Upper-Egypt is added. Thermal power stations in Lower Egypt are primarily of the steam type. The high forced outage rates of boilers and turbines as compared to other components in steam power stations verify the consideration of these two components only in reliability studies.

The power stations in Lower Egypt system have a large variety of boiler-turbine configurations. The combinations of boilers and turbines on a common header connection range from 2 boilers/1 turbine units to 6 boilers/4 turbine units. The common-header type is found in old stations, where a number of boilers are found to feed another number of turbines. The difficulty then comes from the large number of combinations leading to partial failures, or deratings. This poses difficulty when applying most reliability evaluation techniques.

This paper presents a method of replacing any compounded generation system by an equivalent non-common-header generation units, which facilitates the application of most reliability evaluation techniques.

CONSTRAINTS

The above replacement model should be made satisfying the following constraints:

i) The total power delivered by the station remains unchanged.

ii) The "forced outage distribution", i.e., the distribution of available power should be honoured.

- To allow a better fitting of the forced outage distribution the number of generation units was taken equal to the number of boilers, rather than turbines, as they are the more numerous in all cases.and dominate turbines in as far as forced outage is concerned. More generation units mean more degrees of freedom in the fitting process and thus better simulation.

METHOD OF CALCULATION

1- No. of equivalent generation units = No. of boilers N_b

2- Capacity of equivalent generation unit = $\frac{\text{Turbine capacity X No. of turbines}}{N_b}$

3- Forced Outage Rate:

Based on the principle of equal-full power availability:

- availability of full turbine capacity $A_t = (1-f_t)^{N_t}$

  f_t , being the FOR of one turbine, Nt-the number of turbines.

- availability of a power from boilers equal to full turbine capacity

$$A_b = (1-f_b)^{N_b} + N_b (1-f_b)^{N_b} f_b + \frac{N_b(N_b-1)}{2}(1-f_b)^{N_b-1} f_b^2 + \ldots$$

f_b , being the FOR of one boiler

The number of terms is determined by the excess power which the total boilers have over the total turbines.

Availability of station full capacity = A_t A_b

Therefore,

Table (5.1) Continued

Station	Type & No of units	Capacity (MW)	Average down time (hr.)	Average up time (hr.)
8	G 1	14	53.43	3665.50
	G 2	14	10.76	6384.83
	G 3	18.5	114.68	5583.00
	G 4	18.5	108.32	5470.83
	B 1	30	37.57	3588.83
	B 2	30	55.78	4976.67
	B 3	30	42.86	5916.33
	B 4	30	57.07	4636.17
	B 5	30	84.70	5402.33
9	G 1	8	103.48	2642.75
	G 2	8	82.19	1819.50
	G 3	8	157.18	5652.75
	G 4	8	11.89	5721.00
	B 1	10	97.17	3441.25
	B 2	10	2.42	4297.25
	B 3	10	61.86	4357.25
	B 4	10	17.81	2916.75
	B 5	10	0.00	2838.00
	B 6	10	0.00	3031.25
	B 7	10	56.67	4714.25

Report No. 2

BOILER-TURBINE MODEL FOR RELIABILITY-STUDY

by

H. Anis, H. El-Shaer, H. El-Kolaly

2. For each random "shot" in time, the program determines whether a deficiency in supplying the load has occured and the magnitude of the deficit.

3. Finally the program, over a prespecified number of shots, calculates the overall risk of loss of load (another version of the loss-of load probability).

$$\text{Risk} = \frac{\sum \text{No. of shots with deficiency}}{\text{Total No. of shots}}$$

4. The energy-not-served is also estimated as

$E = \sum_i P.\Delta t$, P being the loss of load & Δt the equivalent time interval.

If annual energy-not-served is sought

$$\Delta t = \frac{8760 \text{ hour/year}}{\text{Total No. of shots (L)}}$$

i.e.,

$$E = \frac{8760}{L} \times \sum_i P \qquad \text{MWH/year}$$

Note: It would be preferable to avoid pessimistic results, and compute the energy not served using average daily load instead of daily peak demands. More accurately, yet less practical, hourly loads may be used.

DATA:

1- Forced outage rates of all " equivalent generation units" and their capacities and numbers.

2- Peak load demand average profile p (t) in p.u. of its annual peak value. Provision is made to accept up to 365 data points, i.e., on a day-to-day basis.

3- Forecasted annual peak load in MW for the year under study

4- Per unit power unavailable due to maintenance.

Scheduled Maintenance

The program simulates only the forced outage of the generating units. This does not account for the units in scheduled maintenance which further subject the load to a loss.

Based on the history of 1976-1978, it was estimated that maintenance scheduling is governed by the two following rules.

1- The year is divided into: High demand-low hydro energy resources period of 5 months: October, November, December, January & February and a low-demand-high hydro energy resources period of 7 months: March-September. In the first period, no maintenance should be scheduled. All maintenance operations are done in the second.

2- Over the maintenance 7-month period on the average, 14 % of the available power is scheduled for maintenance. The selection of the generating units to go to maintenance is done by the computer program. The constraints over the average scheduled maintenance duration has not been considered and is being investigated and will be reported as soon as possible. Random selection of units is made which should yield a total of about 14% of the available capacity for maintenance.

DATE			ELEMENT NO.	TIME		TOTAL DURATION			F.O.R.
D	M	Y		FAILURE	OPERATION	FAILURE	OPERATION	SUM.	
31	12	78	12	00-00					
						64-14	34999-46	35064	0.001,831,8
01	01	75	13	00-00	26328-00				
02	01	78	"	00-05	695-55				
31	01	78	"	00-15	503-45				
21	02	78	"	03-24	1700-36				
03	05	78	"	00-18	359-42				
18	05	78	"	00-05	215-55				
27	05	78	"	00-07	1991-53				
18	08	78	"	00-20	23-40				
19	08	78	"	00-19	527-41				
10	09	78	"	00-10	143-50				
16	09	78	"	385-00	71-00				
05	10	78	"	00-40	2111-20				
31	12	78	"	00-00					
						390-43	34673-17	35064	0.011,142,9

DATE			ELEMENT NO.	TIME		TOTAL DURATION			F.O.R.
D	M	Y		FAILURE	OPERATION	FAILURE	OPERATION	SUM.	
01	01	75	14	00-00	2160-00				
01	04	75	"	00-02	3863-58				
09	09	75	"	00-09	1319-51				
06	02	76	"	00-01	2495-59				
15	02	76	"	00-12	5543-48				
03	10	76	"	00-02	71-58				
06	10	76	"	00-18	71-42				
09	10	76	"	58-47	949-13				
20	11	76	"	00-05	2423-55				
01	03	77	"	00-07	4919-53				
22	09	77	"	00-05	1175-55				
10	11	77	"	00-08	407-52				
27	11	77	"	00-06	2063-54				
21	02	78	"	00-08	4295-52				
19	08	78	"	00-40	191-20				
27	08	78	"	01-30	238-30				
06	09	78	"	00-26	695-34				
05	10	78	"	01-28	2110-32				
31	12	78	"	00-00					
						64-14	34999-46	35064	0.001,831,8

DATE			ELEMENT NO.	TIME		TOTAL DURATION			F.O.R.
D	M	Y		FAILURE	OPERATION	FAILURE	OPERATION	SUM.	
01	01	75	7	00-00	9792-00				
13	02	76	"	00-10	5207-50				
17	09	76	"	00-03	13607-57				
07	04	78	"	00-05	6455-55				
31	12	78	"	00-00					
						00-18	35063-42	35064	0.000,008,5
01	01	75	8	00-00	25800-00				
11	12	77	"	00-02	7271-58				
10	10	78	"	13-00	1979-00				
31	12	78	"	00-00					
						13-02	35050-58	35064	0.000,371,7
01	01	75	9	00-00	240-00				
11	01	75	"	01-04	34822-56				
31	12	78	"	00-00					
						1-04	35062-56	35064	0.000,030,4
01	01	75	10	00-00	11280-00				
15	04	76	"	06-14	545-46				
08	05	76	"	00-11	17735-49				
17	05	78	"	00-05	5495-55				
31	12	78	"	00-00					
						6-30	35057-30	35064	0.000,185,3

DATE			ELEMENT NO.	TIME		TOTAL DURATION			F.O.R.
D	M	Y		FAILURE	OPERATION	FAILURE	OPERATION	SUM.	
01	01	75	11	00-00	35064-00				
31	12	78	"	00-00					
						00-00	35064-00	35064	0.0
01	01	75	12	00-00	2160-00				
01	04	75	"	00-02	3863-58				
09	09	75	"	00-09	1319-51				
06	02	76	"	00-01	2495-59				
15	02	76	"	00-12	5543-48				
03	10	76	"	00-02	71-58				
06	10	76	"	00-18	71-42				
09	10	76	"	58-47	949-13				
20	11	76	"	00-05	2423-55				
01	03	77	"	00-07	4919-53				
22	09	77	"	00-05	1175-55				
10	11	77	"	00-08	407-52				
27	11	77	"	00-06	2063-54				
21	02	78	"	00-08	4295-52				
19	08	78	"	00-40	191-20				
27	08	78	"	01-30	238-30				
06	09	78	"	00-26	695-34				
05	10	78	"	01-28	2110-32				

DATE			ELEMENT NO.	TIME		TOTAL DURATION			F.O.R.
D	M	Y		FAILURE	OPERATION	FAILURE	OPERATION	SUM.	
01	01	75	4	00-00	2136-00				
31	03	75	"	00-07	3815-53				
06	09	75	"	00-03	47-57				
08	09	75	"	00-01	1007-59				
20	10	75	"	00-10	7559-50				
30	08	76	"	00-05	71-55				
02	09	76	"	00-02	4175-58				
23	02	77	"	08-02	111-58				
28	02	77	"	02-57	3981-03				
13	08	77	"	01-35	166-25				
20	08	77	"	00-10	143-50				
26	08	77	"	00-08	71-52				
29	08	77	"	00-05	8951-55				
06	09	78	"	02-25	2805-35				
31	12	78	"	00-00					
						15-50	35048-10	35064	0.000,451,5

DATE			ELEMENT NO.	TIME		TOTAL DURATION			F.O.R.
D	M	Y		FAILURE	OPERATION	FAILURE	OPERATION	SUM.	
01	01	75	5	00-00	15456-00				
06	10	76	"	02-27	3381-33				
24	02	77	"	00-04	3263-56				
10	07	77	"	00-04	815-56				
13	08	77	"	01-35	934-25				
21	09	77	"	00-13	215-47				
30	09	77	"	00-03	10079-57				
24	11	78	"	00-08	911-52				
31	12	78	"	00-00					
						4-34	35059-26	35064	0.000,130,2
01	01	75	6	00-00	1104-00				
16	02	75	"	00-19	8687-41				
13	02	76	"	00-10	5207-50				
17	09	76	"	00-05	20063-55				
31	12	78	"	00-00					
						00-34	35063-26	35064	0.000,016,1

SEMI-COMPILED DATA FOR THE 220 kV TRANSMISSION NETWORK IN LOWER EGYPT

(PERFORMANCE HISTORY)

DATE			ELEMENT NO.	TIME		TOTAL DURATION			F.O.R.
D	M	Y		FAILURE	OPERATION	FAILURE	OPERATION	SUM.	
01	01	75	1	00-00	4224-00				
26	06	75	"	00-10	21167-50				
24	11	77	"	00-02	191-58				
02	12	77	"	00-03	9479-57				
31	12	78	"	00-00					
						00-15	35063-45	35064	0.000,007,1
01	01	75	2	00-00	35064-00				
31	12	78	"	00-00					
						00-00	35064-00	35064	0.0
01	01	75	3	00-00	1296-00				
24	02	75	"	00-02	3503-58				
20	07	75	"	353-46	17526-14				
03	08	77	"	00-24	1367-36				
29	09	77	"	00-05	7775-55				
19	08	78	"	00-03	3239-57				
31	12	78	"	00-00					
						354-20	34709-40	35064	0.010,105,3

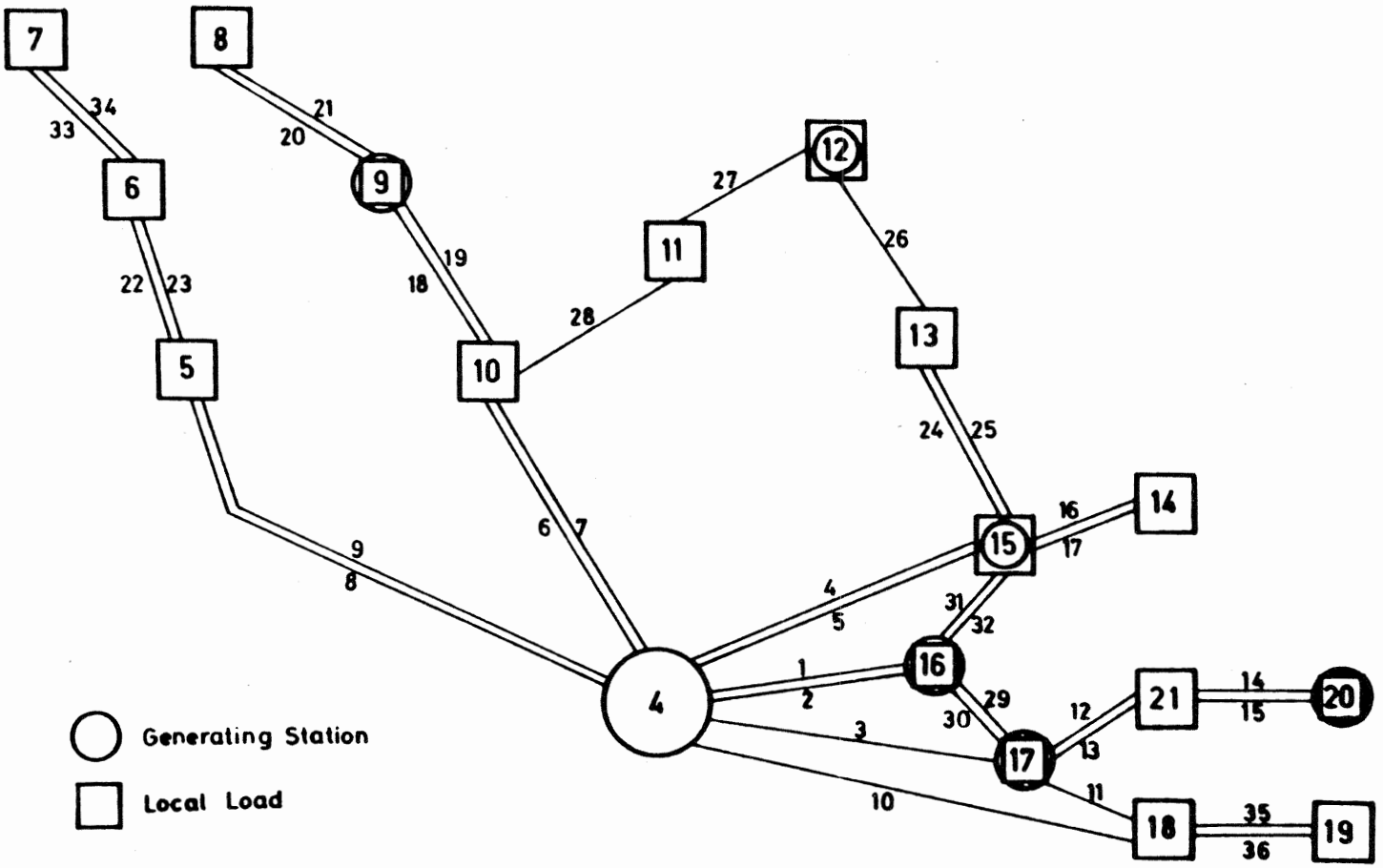

MAP OF 220 KV NETWORK

T.L NUMBER	CONDUCTOR TYPE	NUMBER OF CIRCUITS	LINE LENGTH K.M	RESISTANCE OHM / K.M	REACTANCE OHM / K.M
1 & 2	ACSR-400	2	11	0.0835	0.412
3	ACO-400	1	37.29	0.08	0.393
4 & 5	ACSR-400	2	24	0.0835	0.412
6 & 7	ACSR-400	2	69	"	"
8 & 9	ACO-400	2	130.5	0.08	0.393
10	ACO-400	1	37.29	0.08	0.393
11	ACO-2x240	1	2.94	0.13	0.392
12&13	ACSR-400	2	30	0.0835	0.412
14&15	ACSR-400	2	110	0.0835	0.412
16&17	ACO-2x240	2	19.24	0.13	0.392
18&19	ACSR-400	2	63	0,0835	0.412
20&21	ACSR-400	2	47	"	"
22&23	ACO-2x240	2	35	0.078	0.41
24&25	ACSR-400	2	60	0,0835	0.412
26	ACSR-400	1	60	"	"
27	ACSR-400	1	50	"	"
28	ACSR-400	1	43	"	"
29&30	ACSR-400	2	46.6	"	"
31&32	ACSR-400	2	16.4	"	"
33&34	ACSR-400	2	30.0	"	"
35&36	ACSR-400	2	100	0,0835	0.392

2. Electrical Constants

The power flow subroutine is used to calculate the over loading cycle of each element, and to calculate the power flow between elements each time one element at least changes its state. In addition to the history of elements, the input of the RAMPOT package includes the impedances of the different elements (transmission lines) forming the network. For the network under study, which is the 220 KV transmission system, the different conductor types, and their constants are shown below:

Conduct type	Resistance ohms per km	Reactance ohms per km	Notes
ASCR - 400	0.0835	0.412	average values
ACO - 400	0.08	0.393	"
ACO - 240	0.13	0.392	

3. Element Power Capacity and Voltages:

The power capacity of each element is determined according to certain factors. For long lines, with high voltage level the stability point of view is the most important factor. For medium lines the voltage drop becomes the main factor, but for short lines the main factor becomes the temperature rise limit.

The voltage magnitude at different bus-bars are considered constant, but their angles change.

4. The Network Configuration

The network is shown in the following map, the double circuit lines, are considered one element having the electrical equivalent constants of the parallel connection as these parallel elements are identical from the loading point of view, physical constants, and weather conditions.

The above table shows the exact history of three transmission lines belonging to the 220 KV electric network of Egypt. The constants of those three elements are shown below:

Element No,	Length km	Type of cond	resistance ohm/km	reactance ohm/km	total resistance ohms	total reactance ohms
1	11	ACSR - 400	0.0835	0.412	0.9185	4.532
2	11	ACSR - 400	0.0835	0.412	0.9185	4.532
3	37.29	ACO - 400	0.08	0.393	2.98	14.65

c- Frequency Distribution Form of Data:

In this stage of data processing the intervals of similar status (operation or failure) are gathered to form a time-frequency table. As an example, for a certain element during the four years period the action-frequency distribution form is shown below:

Element No.	Operation Time hr.-min.	Operation Frequency	Failure Time hr.- min.	Failure Frequency
	160 - 51	1	00 - 02	1
	215 - 40	1	00 - 05	3
	287 - 30	1	00 - 20	1
	575 - 55	1	00 - 30	1
22	1367 - 55	1	07 - 09	1
	1978 - 36	1	13 - 24	1
	2208 - 00	1		
	6527 - 58	1		
	21719 - 55	1		

The above information belongs to element number (22) in the 220 KV transmission network which has a length of 35 km, conductor type ACO - 240, a resistance per km equal to 0.078 ohms, and a reactance equal to 0.41 ohms per km.

The simulation of the random fail/repair cycle of an element should be based on a given cumulative distribution. This is inevitable when the sample size in the available history is small which is our case with transmission network elements. The change from the frequency distribution to a cumulative distribution is done within the program RAMPOT itself. For the above example element number (22) the cumulative frequency-time distribution is shown below:

Element No.	Operation Time	Operation Frequency	Cumulative Operation Frequency	Failure Time	Failure Frequency	Cumulative Failure Frequency
	160 - 51	1	0.111	00 - 22	1	0.125
	215 - 40	1	0.222	00 - 05	3	0.50
	287 - 30	1	0.333	00 - 20	1	0.625
	575 - 55	1	0.444	00 - 30	1	0.75
22	1367 - 55	1	0.556	07 - 09	1	0.875
	1978 - 36	1	0.667	13 - 24	1	1.00
	2208 - 00	1	0.778			
	6527 - 58	1	0.889			
	21719 - 55	1	1.00			

b. Semi-Compiled Data

This is the second stage of data preparation, it is derived from the raw data. In this stage the performance history of each element is gathered. All events are registered on one single chronological record beginning at the "1st" hour and ending at the (35064 th) hour *.

The failure, and operation durations are then obtained, from which the performance cycle is formulated. The corresponding forced outage rate (F.O.R.) is also readily calculated. This stage of data processing is presented in a table form as follows:

Element No.	Operation Time	Operation Frequency	Cumulative Operation Frequency	Failure Time	Failure Frequency	Cumulative Failure Frequency
	160 - 51	1	0.111	00 - 02	1	0.125
	215 - 40	1	0.222	00 - 05	3	0.50
	287 - 30	1	0.333	00 - 20	1	0.625
	575 - 55	1	0.444	00 - 30	1	0.75
22	1367 - 55	1	0.556	07 - 09	1	0.875
	1978 - 36	1	0.667	13 - 24	1	1.00
	2208 - 00	1	0.778			
	6527 - 58	1	0.889			
	21719 - 55	1	1.00			

* The hours sum over 4 years = 4 X 8760 + 24 = 35064 hours

DATE			ELEMENT NO.	TIME		TOTAL DURATION			F.O.R.
D	M	Y		FAILURE	OPERATION	FAILURE	OPERATION	SUM.	
01	01	75	1	00-00	4224-00				
26	06	75	"	00-10	21167-50				
24	11	77	"	00-02	191-58				
02	12	77	"	00-03	9479-57				
31	12	78	"	00-00					
						00-15	35063-45	35064	0.000,007,1
01	01	75	2	00-00	35064-00				
31	12	78	"	00-00					
						00-00	35064-00	35064	0.0
01	01	75	3	00-00	1296-00				
24	02	75	"	00-02	3503-58				
20	07	75	"	353-46	17526-14				
03	08	77	"	00-24	1367-36				
29	09	77	"	00-05	7775-55				
19	08	78	"	00-03	3239-57				
31	12	78	"	00-00					
						354-20	34709-40	35064	0.010,105,3

Data for RAMPOT Package

The following sets of data must be supplied to the RAMPOT routine:

1. Performance history
2. Constants of the electric network elements, i.e., thier impedances and sizes of the conductors.
3. The power capacity of those elements, and the bus voltages
4. The network configuration.

1. Performance History

Data concerning the individual availability of the system elements are principally needed in reliability study. To be able to simulate the random performance of the system, the random fluctuation between repair and failure of each element must be provided. The provision of such information passes through three stages, the raw data, the semi-compiled data, and the statistical distribution of the times to repair and failure

a- Raw data

For the transmission network under study (220 K.V.), this form of data has been recorded over a period of four years (1975-1978), and documented at the dispatching center of the E.E.A., or at the different power stations in the network. In a form of a log sheet the time at which each element reverses its state (operation/failure) is indicated. The following table is an excerpt to outline the contents of these tables.

Date			element * number	failure started at time	operation started at time
Day	Month	Year			
01	01	1975	1	05 - 53	05 - 59
24	02	1975	3	18 - 02	23 - 20
24	02	1975	4	19 - 00	19 - 30
31	12	1976	1	10 - 03	14 - 02
.	.	.	.	.	.
.	.	.	.	.	.
.	.	.	.	.	.
.	.	.	.	.	.

* An element is a T.L. section

LONG TERM INVESTMENT PLANNING OF THE EGYPTIAN ELECTRIC POWER SYSTEM

SECTION II

POWER SYSTEM RELIABILITY ASSESSMENT TRANSMISSION RELIABILITY

Report No. 1

DATA FOR RAMPOT PACKAGE

M. EL - SOBKI

M. ZEIN

H.ABDEL AZIZ

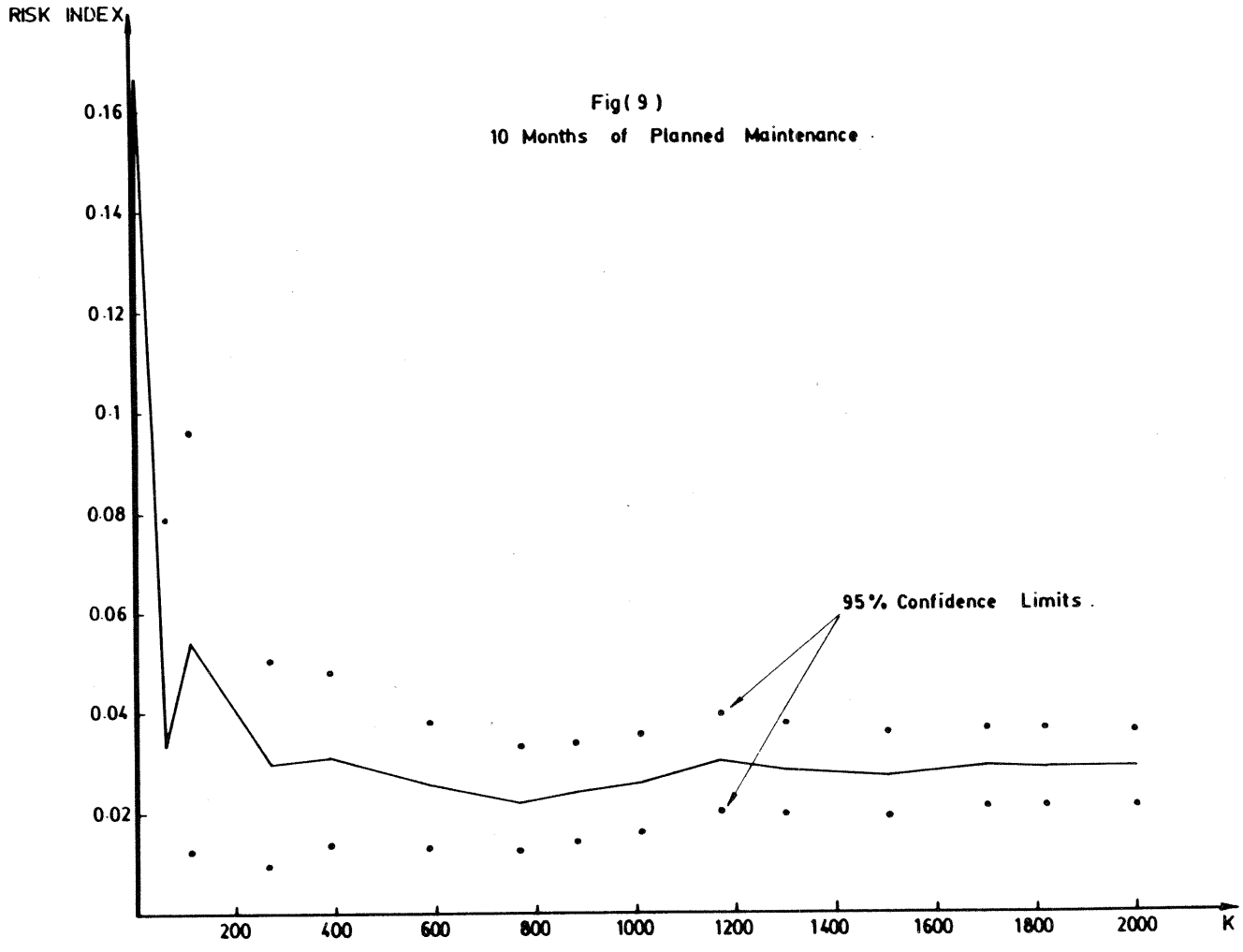

Fig (9)
10 Months of Planned Maintenance

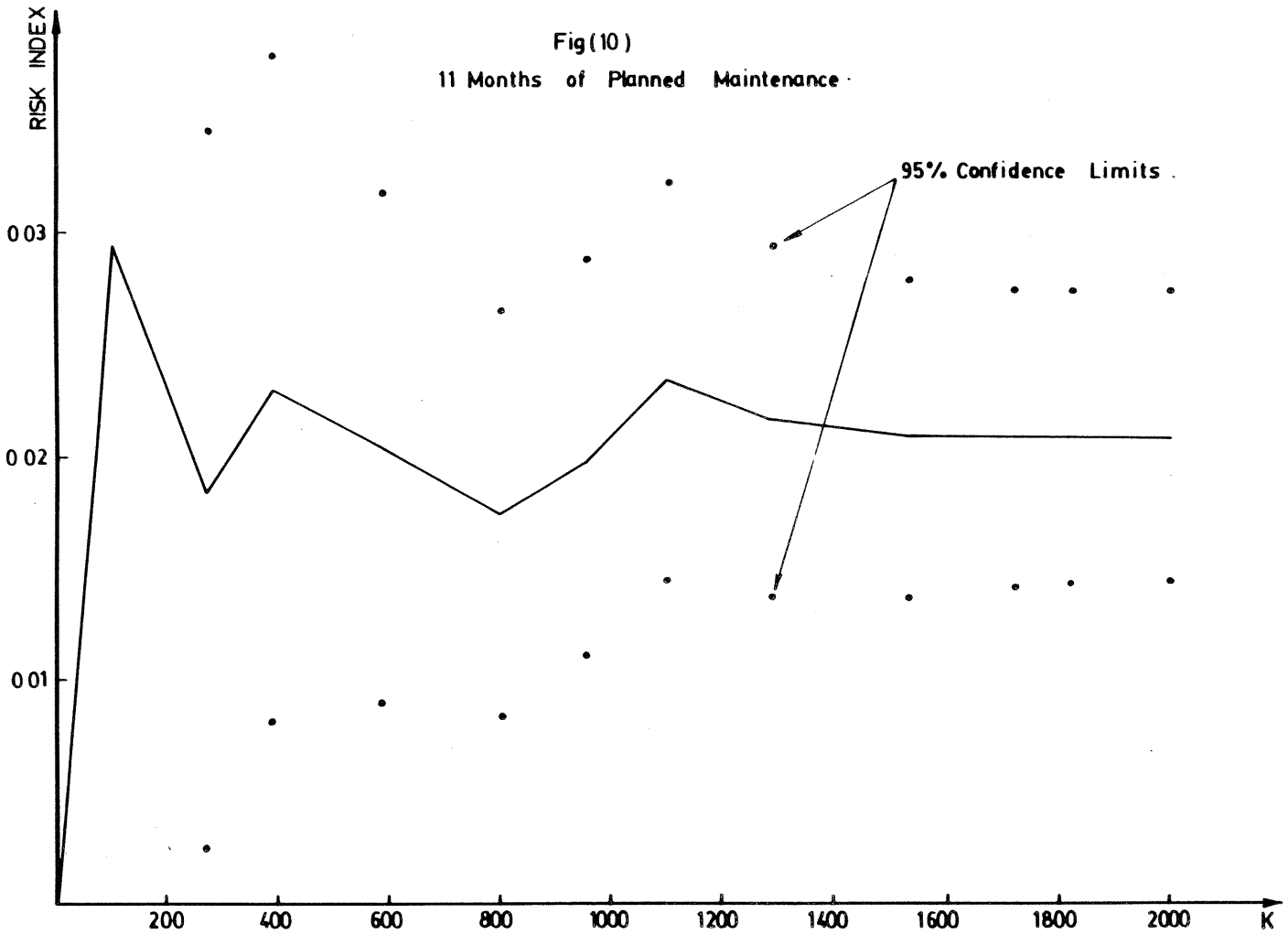

Fig (10)
11 Months of Planned Maintenance

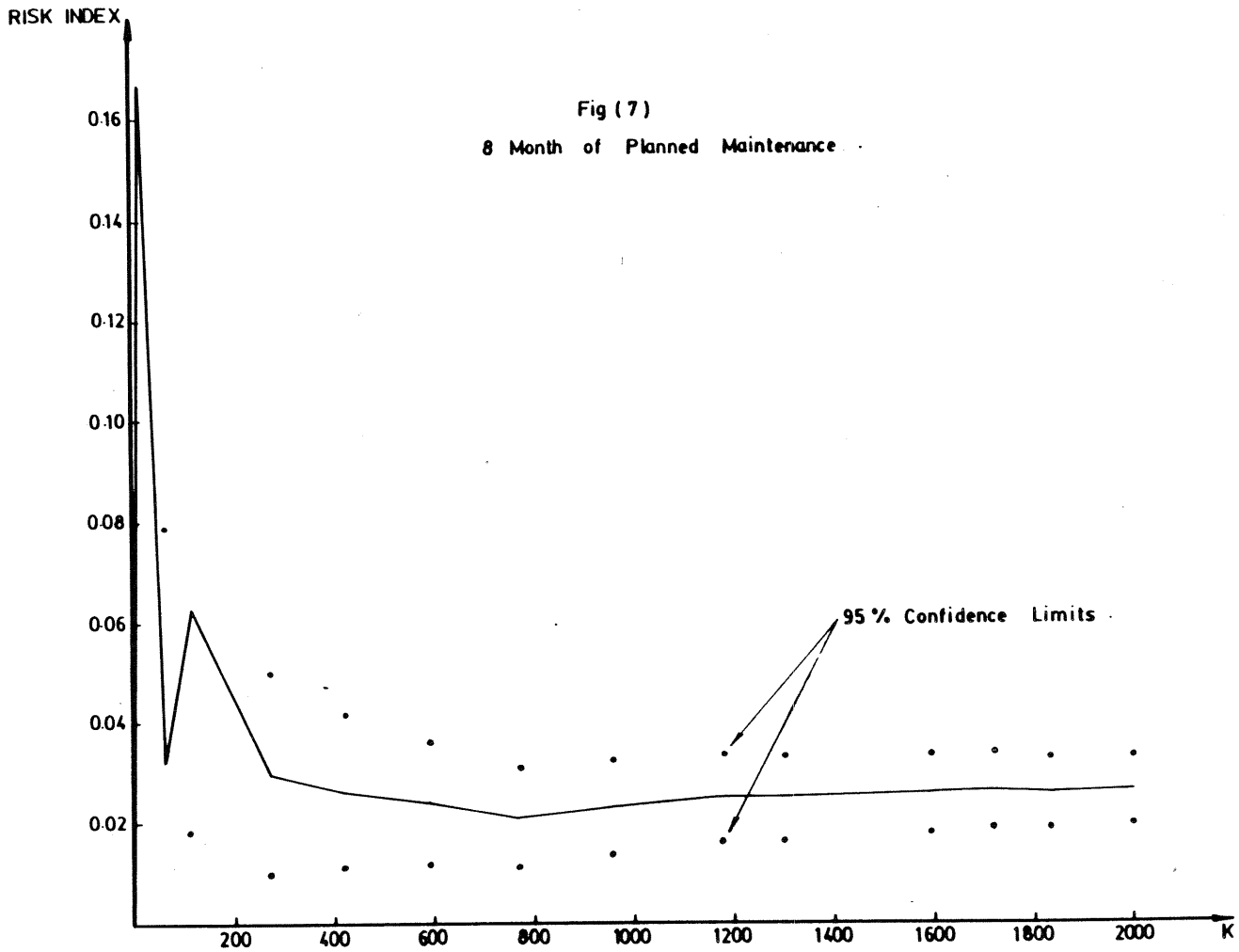

Fig (7)

8 Month of Planned Maintenance

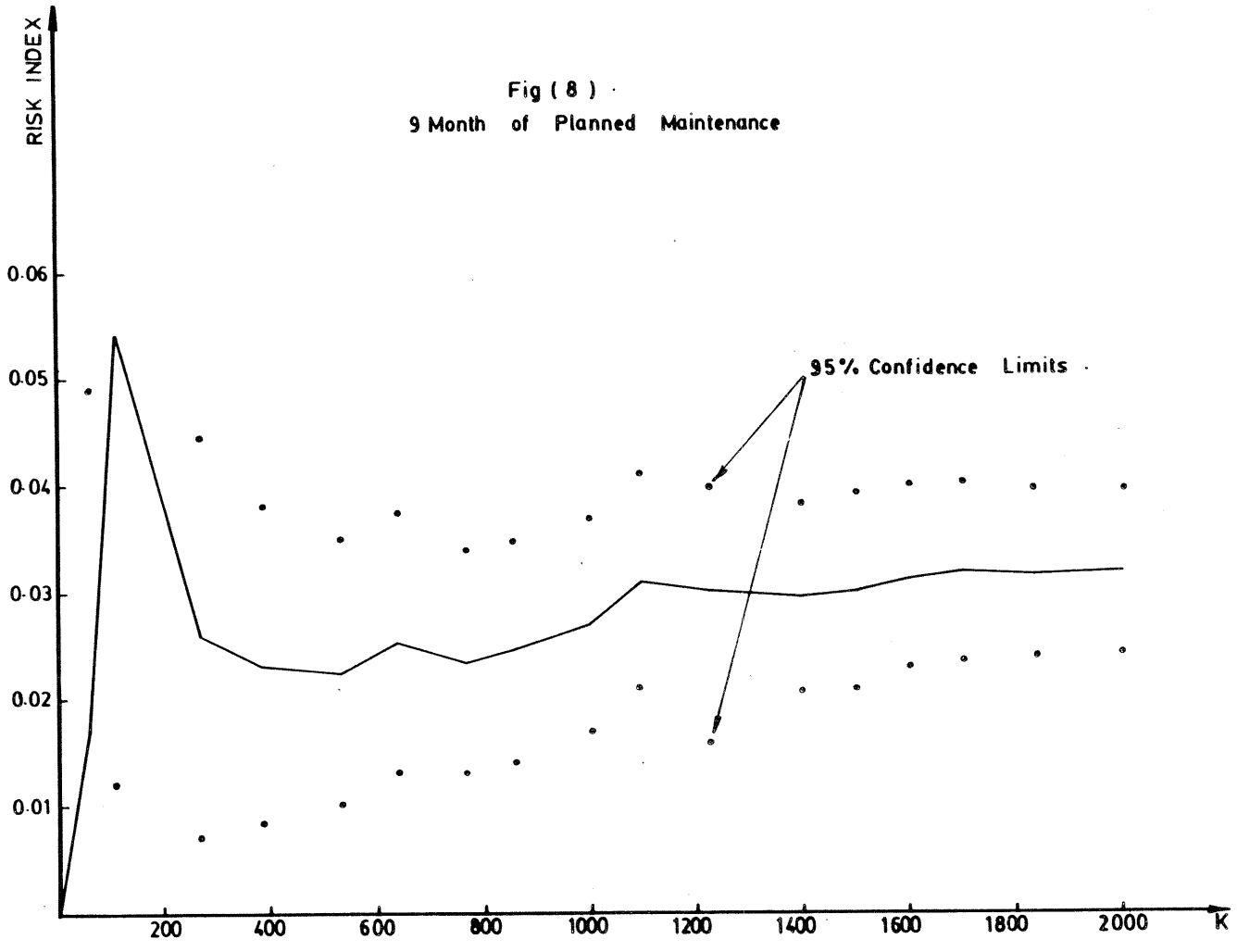

Fig (8) ·
9 Month of Planned Maintenance

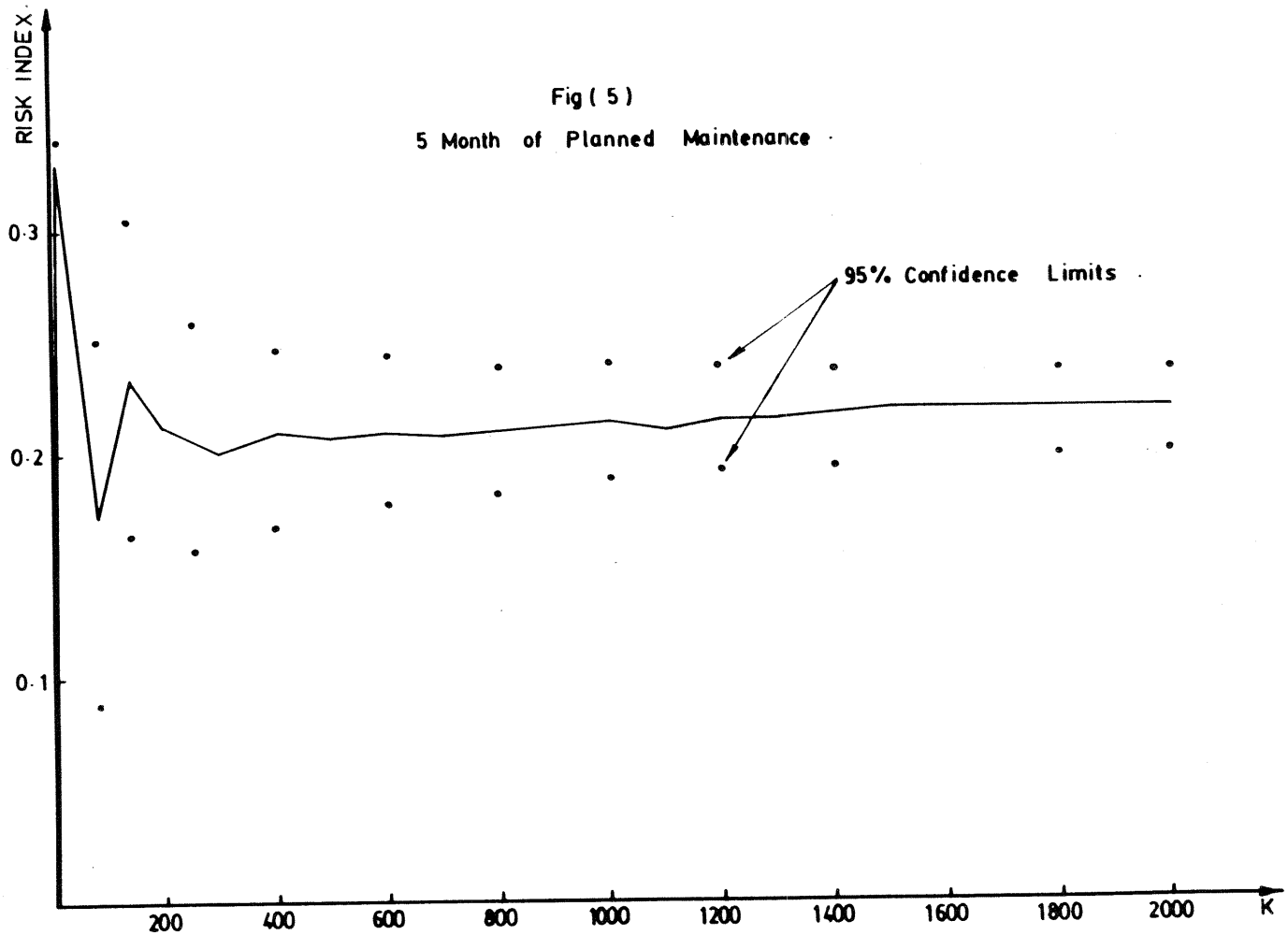

Fig (5)

5 Month of Planned Maintenance

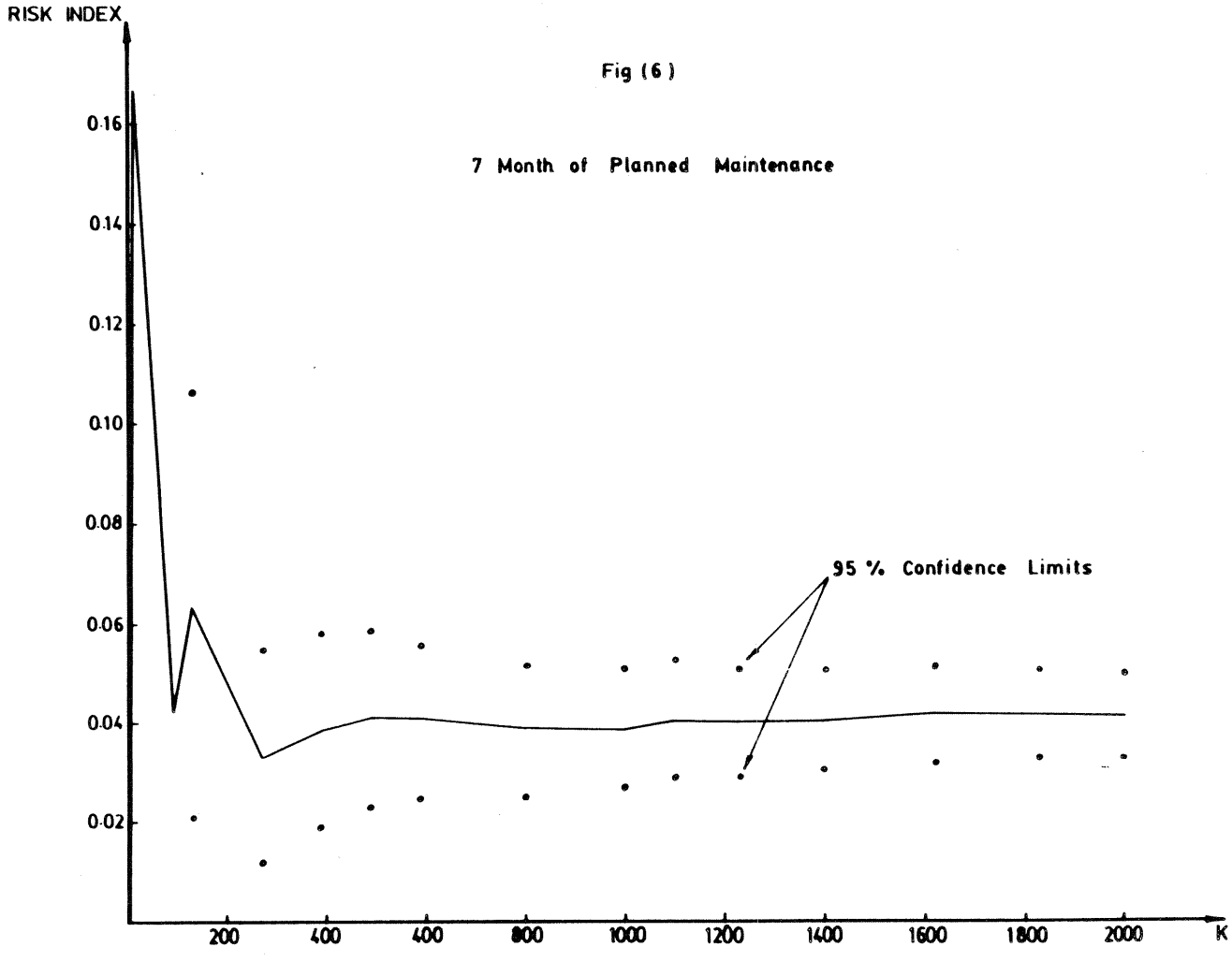

Fig (6)

7 Month of Planned Maintenance

CONFIDENCE IN THE RISK INDEX BASED ON THE MONTE CARLO TECHNIQUE

Obviously as the number of trials in calculating the Risk Index increases, the accuracy of that index increases. In view of the marked computer time which is spent in this case, it would be useful to prespecify the number of trials. To be able to do this, a confidence analysis of the calculated Risk Index must be carried out.

As the Risk Index expresses the proportion of times that the load will be unserved then this, in fact, is a problem of estimating the parameter of a binominal population. Making use of the fact that for large number of trials n the binominal distribution can be approximated with a normal distribution, that is, $(x - n\theta)/\sqrt{n\theta(1 - \theta)}$ can be treated as if it were a random variable having the standard normal distribution, where x is the number of failures. $A(1-\alpha)$ confidence interval for may be obtained from

$$- Z_{\alpha/2} \qquad \frac{x - n\theta}{\sqrt{n\,\theta(1 - \theta)}} \qquad Z_{\alpha/2}$$

Solving this double inequality for θ we obtain a $1 - \alpha$ confidence interval for θ whose upper and lower limmits are given by

$$\frac{x + \frac{1}{2} Z^2_{\alpha/2} \pm Z_{\alpha/2} \sqrt{\frac{x(n - x)}{n} + \frac{1}{4} Z^2_{\alpha/2}}}{n + Z^2_{\alpha/2}}$$

A somewhat simpler large sample approximation may be obtained by writing the above limits as

$$\frac{x}{n} - Z_{\alpha/2} \sqrt{\theta(1-\theta)/n} < \theta < \frac{x}{n} + Z_{\alpha/2} \sqrt{\theta(1-\theta)/n}$$

and then substituting x/n for θ in the smallest and largest terms of this double inequality. We thus get the following approximate $1 - \alpha$ confidence interval for θ :

$$\frac{x}{n} - Z_{\alpha/2} \sqrt{\frac{x}{n}(1-\frac{x}{n})/n} < \theta < \frac{x}{n} + Z_{\alpha/2} \sqrt{\frac{x}{n}(1-\frac{x}{n})/n}$$

In Monte Carlo simulation applied for the year 1978 in another paper, for example, the 283rd shot (trial) produced a risk index of 0.0353 and the assumptions underlying the binominal distribution are met. Substituting this value together with $Z_{.025} = 1.96$ into the above limits gives the following 95 % confidence interval for the index θ

$$.014 < \theta < .057$$

In figures (5 to 10), the complete profile of the risk index variation as the number of trials increases is illustrated. The 95 % confidnece limits are marked on the figure. This is done for the different scheduled maintenance programs chosen in the previous paper. It appears from these figures that the profile is nearly the same for all cases and the resting values are found after 1400 shots on the average where the 95% confidence intervals range from $\pm$ 0.01 to $\pm$ 0.02.

Normally, the available distributions of generated and load powers would be used directly in a numerical integration routine. However, the resulting risk index, in general is very small (order of 10^{-4}) a fact which could create numerical inaccuracy as the available power interval (here 10 MW) becomes then relatively large. Alternatively, data may be fitted to an analytical function which is then analytically integrated.

This means that in a Monte Carlo simulation, on the average, the number of shots should at least be

$$\frac{1}{0.00014027} = 7{,}130 \text{ shots}$$

The 95 % confidence interval for the risk index is

$$0 < 0.00014027 < 0.000415$$

That is 2409 shots are the minimum possible to materialize the risk index simulation with no planned maintenance for the units all over the year[1].

---

1) For no maintenance all over the year Monte Carlo simulation gave zero risk index with 1000 shots.

STATISTICS OF GENERATED POWER DISTRIBUTION

Mean power	=	1882.7 MW
Standard deviation	=	38.9 MW
γ_1 (measure of skewness)	=	- 1.12
γ_2 (measure of kurtosis)	=	3.9

APPLICATION OF MODEL

1) Referring to the figure, the cumulative distribution function of the load over the range 1660 - 1780 MW could be fitted by

$$F(p) = 104564 - 241577\,p + 210117\,p^2 - 81511\,p^3 + 11895\,p^4$$

where p is load in Gega Watt $1.66 < p < 1.78$

2) The cumulative distribution function of the generating capacity was also fitted by

$$C(p) = 714224 - 1654709\,p + 1437723\,p^2 - 555243\,p^3 + 80420\,p^4$$

where p is in Gega watt $1.71 < p < 1.79$

3) The density function of generated power is

$$c(p) = \frac{dC(p)}{dp}$$

$$= -1654709 + 2875446\,p - 1665729\,p^2 + 321680\,p^3$$

4) The risk index is then

$$\int_a^b F(p)\,c(p)\,dp$$

This gave risk index = 0.00014027

Table I - cont.

UNIT CODE	CAPACITY (MW)	FORCED OUTAGE RATE
408	14	0.0227
409	14	0.0227
410	14	0.0227
501	6.25	0.0029
502	6.25	0.0029
503	6.25	0.0029
504	6.25	0.0029
505	6.25	0.0029
506	6.25	0.0029
507	30	0.051
508	30	0.051
509	30	0.051
601	10	0.0316
602	10	0.0316
603	10	0.0316
604	65	0.0262
605	65	0.0262
606	65	0.0262
701	6	0.0065
702	6	0.0065

Table I - cont.

UNIT CODE	CAPACITY (MW)	FORCED OUTAGE RATE
703	6	0.0065
704	6	0.0065
705	6	0.0065
801	13	0.011
802	13	0.011
803	13	0.011
804	13	0.011
805	13	0.011
901	7.5	0.0216
902	7.5	0.0216
903	7.5	0.0216
904	7.5	0.0216
1001	15	0.03
1101	20	0.03
1201	900	0.000041

Table (II)

Distribution of variation in the generating capacity *

Power interval	Mid-range power MV	Probability %	Cumulative probability %
1915 - 1925	1920	29.57	29.57
1905 - 1915	1910	6.89	36.56
1895 - 1905	1900	15.06	51.66
1885 - 1895	1890	5.06	56.73
1875 - 1885	1880	4.83	61.57
1865 - 1875	1870	11.15	72.76
1855 - 1865	1860	5.79	78.57
1845 - 1855	1850	3.83	82.40
1835 - 1845	1840	5.55	87.97
1825 - 1835	1830	3.12	91.10
1815 - 1925	1820	1.64	92.74
1805 - 1815	1810	2.36	95.11
1795 - 1805	1800	1.64	96.75
1785 - 1795	1790	0.84	97.59
1775 - 1785	1780	0.84	98.44
1765 - 1775	1770	0.67	99.11
1755 - 1765	1760	0.27	99.38
1745 - 1755	1750	0.24	99.62
1735 - 1745	1740	0.20	99.82
1725 - 1735	1730	0.07	99.89
1715 - 1725	1720	0.05	99.94
1705 - 1715	1710	0.06	100.00
1695 - 1705	1700	0.00	100.00

* This has been obtained using the computer package prepared by Dr. M. El-Gazzar.

Table (III)

Distribution of Load

Power MW	Cumulative Probability %
1780	0.27
1770	0.41
1760	0.68
1750	1.23
1740	1.64
1730	2.19
1720	3.56
1710	4.11
1700	5.48
1690	6.85
1680	8.22
1670	9.32
1660	11.51

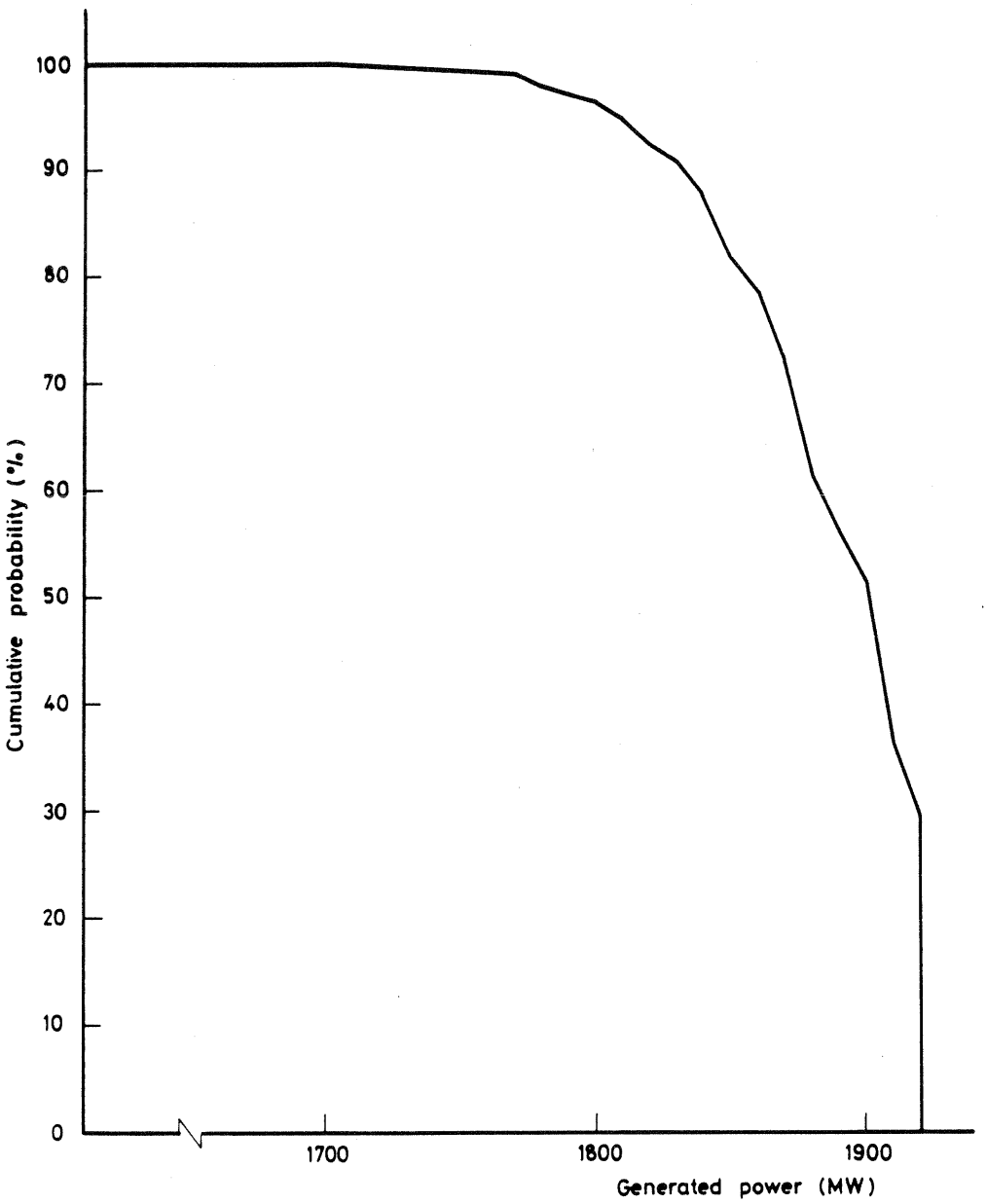
100
90
80
70
60
50
40
30
20
10
0
Cumulative probability (%)
1700
1800
1900
Generated power (MW)

Fig (3)

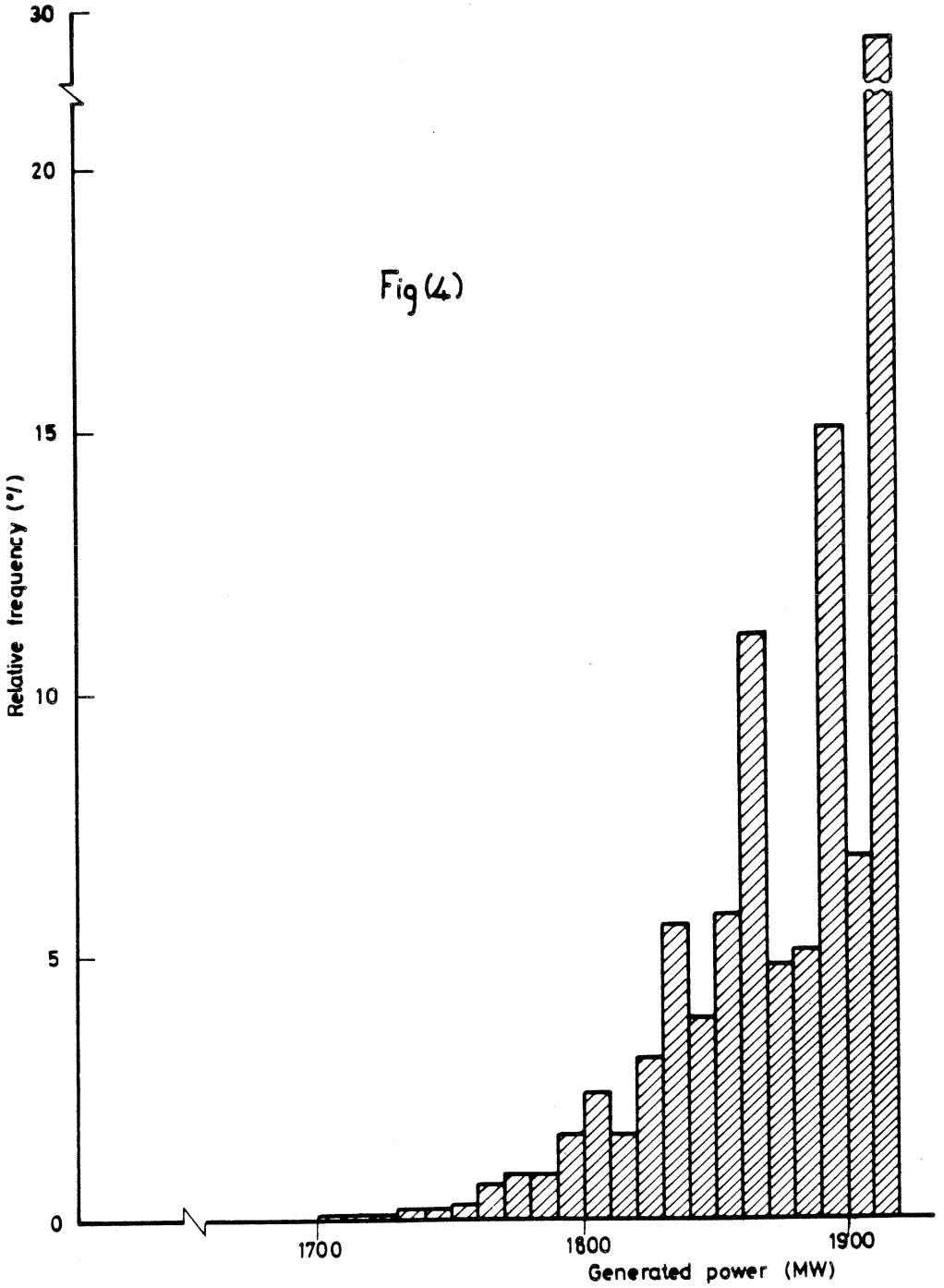
30
20
15
10
5
0
Relative frequency (%)
1700
1800
1900
Generated power (MW)

Fig (4)

LOAD DISTRIBUTION

As the load distribution appears in the model in its cumulative form, that form must be computed from the annual load data Fig.(2). This is readily calculated since it is also used in the Monte Carlo model.

Application

The distribution of variation in the generating capacity is shown in Table (II) and plotted in Figs. (3) and (4). In Table III, the cumulative load distribution is shown.

Fig. 2

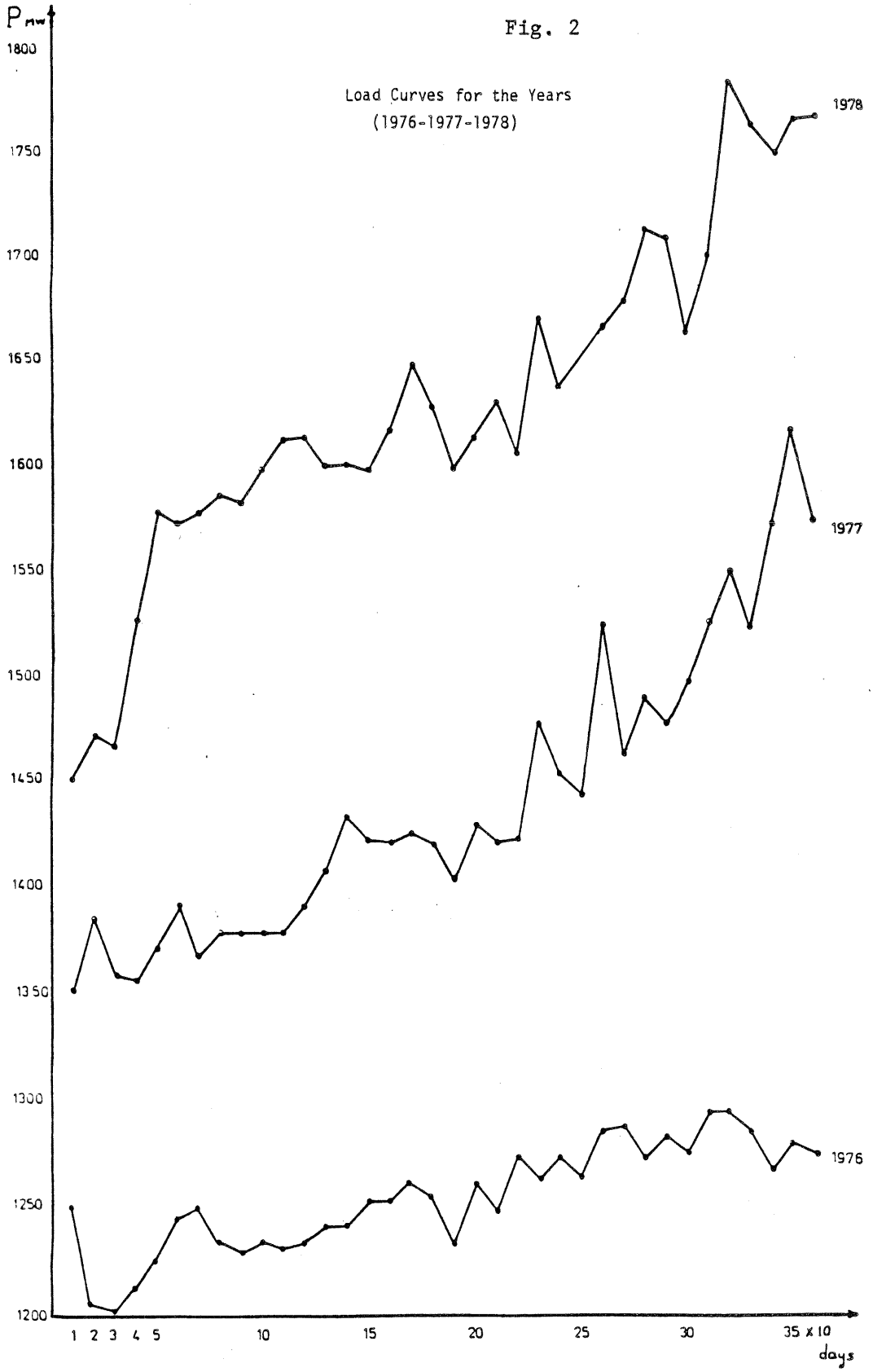
Load Curves for the Years
(1976-1977-1978)
P mw
1800
1750
1700
1650
1600
1550
1500
1450
1400
1350
1300
1250
1200
1978
1977
1976
1 2 3 4 5
10
15
20
25
30
35 x 10
days

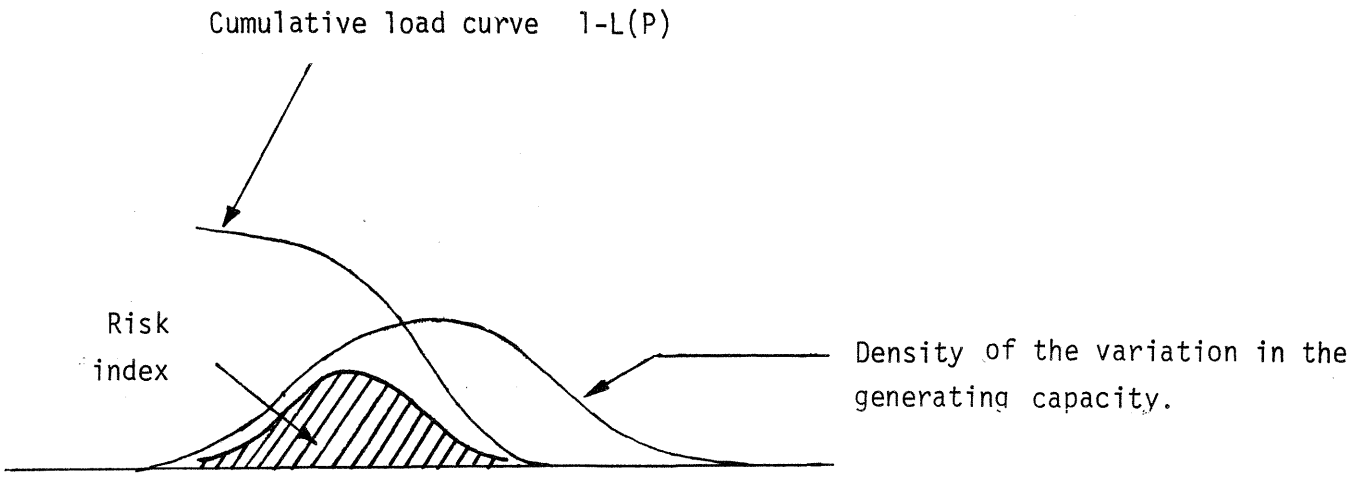

Fig. (1)

AVAILABILITY DISTRIBUTION

The above model was applied to the 1978 generation system which was studied in another report. Table (1) gives the generation units, their powersand forced outage ratesin the year 1978. The probability distribution of the generation (available) capacity could be estimated using binominal expansions and combinatorial probability rules (Table II).

Table I

UNIT CODE	CAPACITY (MW)	FORCED OUTAGE RATE
101	12	0.0122
102	12	0.0122
201	60	0.0909
202	60	0.0909
203	60	0.0909
301	27.5	0.0515
302	27.5	0.0515
303	27.5	0.0515
304	27.5	0.0515
305	27.5	0.0515
306	27.5	0.0515
307	27.5	0.0515
308	27.5	0.0515
401	5.5	0.0145
402	5.5	0.0145
403	5.5	0.0145
404	5.5	0.0145
405	5.5	0.0145
406	5.5	0.0145
407	14	0.0227

CALCULATION OF RISK INDEX BY ANALYTICAL ESTIMATES

INTRODUCTION

In an attempt to verify the accuracy of calculations of the risk index as obtained from the Monte-Carlo model, an analytical approach is presented. The variations in available power and load demand are looked upon as two independent random variables. Search is then analytically made for the probability that the demand may exceed the available power in which case load loss is said to occur.

ANALYSIS

Given the distribution of generated power $c(p_c)$ and load variation $\ell(p_\ell)$ calculate the risk of $P_\ell > P_c$

Assume a joint distribution $f(p_c , p_\ell)$ of the two variables. The variable (x) is a slack variable representing the difference between p_ℓ & p_c

$$x = P_c - P_\ell \quad \text{i.e. } p_\ell = p_c - x$$

The joint probability distribution $g(x,p_c)$ may be calculated

$$g(x,p_c) = f(p_c , p_l) \begin{vmatrix} \frac{\partial p_\ell}{\partial p_c} & \frac{\partial p_\ell}{\partial x} \\ \frac{\partial p_c}{\partial p_c} & \frac{\partial p_c}{\partial x} \end{vmatrix}$$

where $| \quad | \equiv$ Jacobian

$$\therefore \quad g(x,p_c) = f(p_c , p_\ell).$$

The density function of x alone is

$$f_x(x) = \int_{p_c} g(x,p_c)\, dp_c$$

Then

$$f_x(x) = \int_0^x f(p_c , p_\ell)\, dp_c$$

The probability that P_c is smaller than p_ℓ is that of x being negative

Therefore,

$$\text{Risk index} = \int_{-\infty}^{0} \int_0^x f(p_c , p_\ell)\, dp_c\, dx$$

By changing variables

$$\text{Risk index} = \int_0^\infty \int_{P_c}^\infty f(p_c , p_\ell)\, dp_\ell\, dp_c$$

Assuming the load to be independent of generation, then

$$\text{Risk index} = \int \int^\infty c(p_c) \cdot \ell(p_\ell)\, dp_\ell\, dp_c$$

$$\text{Risk index} = \int_0^\infty C(p) \quad [1-L(p)]\, dp$$

where

$$L(p) = \int_0^p \ell(p)\, dp$$

In Fig (1), the above mathematical formulation is pictorially illustrated.

No. of month without maintenance	Per unit capacity in maintenance	Risk index over no maint.period	Risk index over maint. period	Aver. risk index over the year (R)	95% confid. limit R+ΔR	R-Δ R
1 (Dec.)	0.0890	0.0031	0.0235	0.0218	0.0233	0.0203
2 (Dec.,Jan)	0.0980	0.0019	0.0326	0.0275	0.0291	0.0259
3 (Nov.,Dec.,& Jan)	0.1090	0.0017	0.0338	0.0258	0.0274	0.0242
4 (Nov.,Dec.,Jan.& Feb.)	0.1225	0.00145	0.0303	0.0207	0.0221	0.0193
5 (Oct.,Nov.,Dec., Jan.& Feb.)	0.1400	0.00126	0.0396	0.0236	0.0251	0.0221
7 (Sept.,Oct.,Nov., Dec.,Jan.,Feb.& March)	0.1960	0.00104	0.2247	0.0942	0.0971	0.0913

Table (2) Average risk index versus months with no maintenance.

Report No. 5

CALCULATION OF RISK INDEX BY ANALYTICAL ESTIMATES

by

H. Anis & H. El-Kolaly

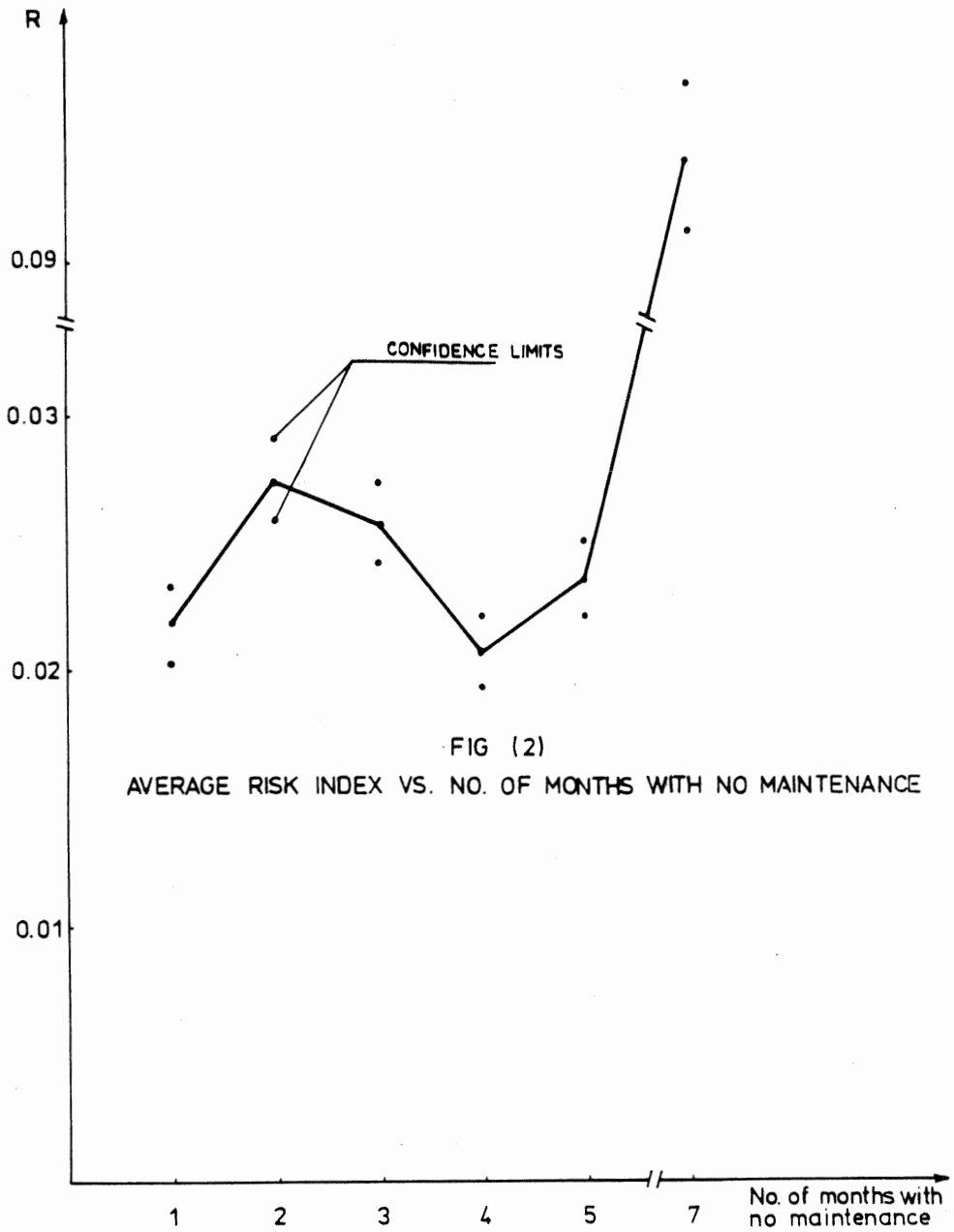

FIG (2)

AVERAGE RISK INDEX VS. NO. OF MONTHS WITH NO MAINTENANCE

No. of months without maintenance	Per unit capacity in maintenance	Energy unserved over no maint. period MWH	Energy unserved over maint. period MWH	Total energy unserved over the year MWH
1 (Dec.)	0.0890	63.09	5941.02	6004.05
2 (Dec, Jan)	0.0980	80.40	8430.70	8511.10
3 (Nov.,Dec., and Jan).	0.1090	112.25	7772.12	7884.37
4 (Nov.,Dec., Jan.& Feb.)	0.1225	138.60	5546.31	5684.91
5 (Oct.,Nov. Dec.Jan.&Feb.)	0.1400	153.69	6568.98	6722.67
7 (Sept.,Oct., Nov.,Dec.Jan., Feb.&March)	0.1960	187.06	33110.92	33297.98

Table (1) Energy unserved versus months with no maintenance

From the results shown in figures (1) and (2) and listed in tables (1) and (2), we conclude that optimum scheduled maintenance program is that which allow scheduled maintenance over eight months (March to October) with a total about of 12.25% of the available capacity on maintenance during that period of the year.

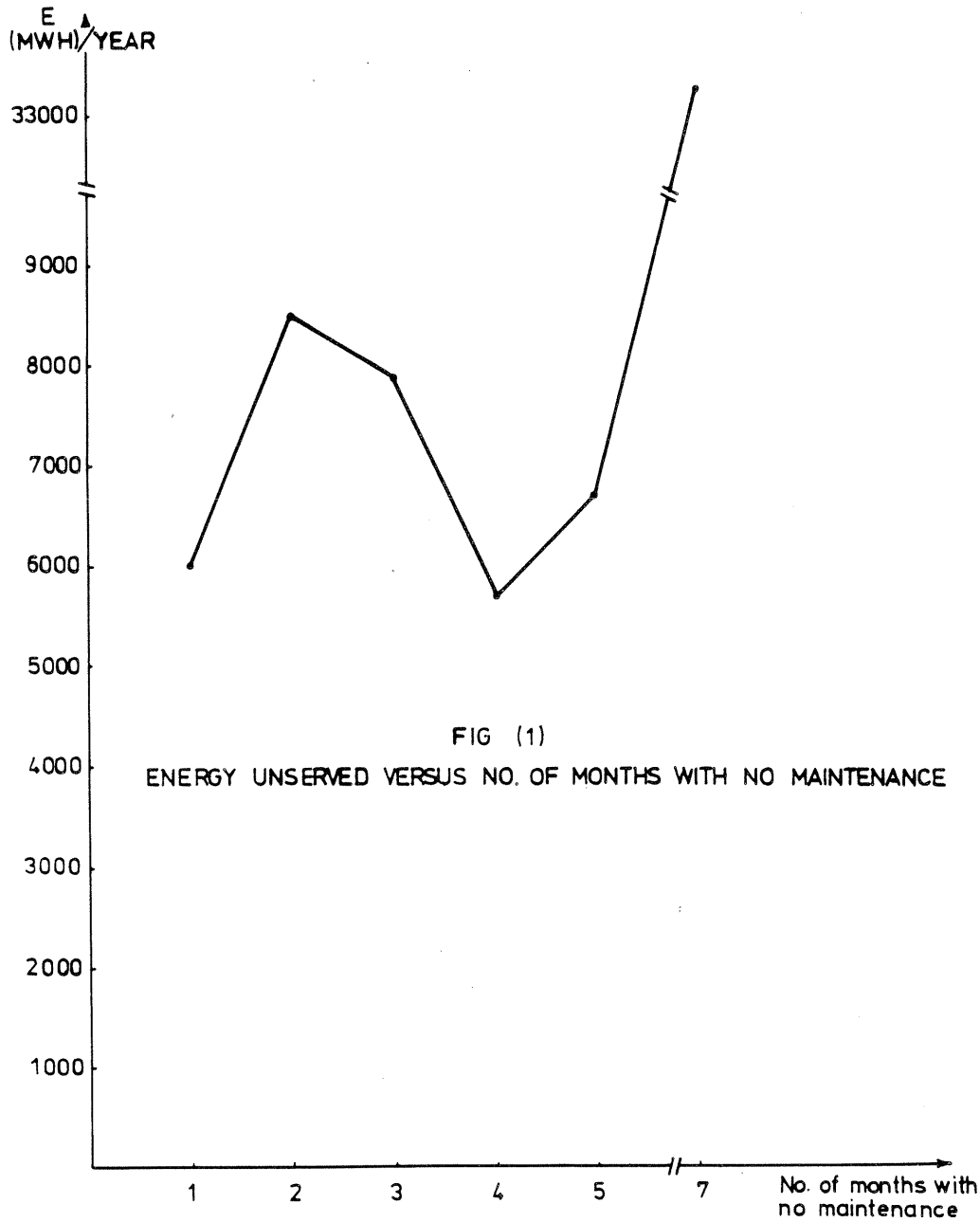

FIG (1)

ENERGY UNSERVED VERSUS NO. OF MONTHS WITH NO MAINTENANCE

SUBROUTINE LØADUR

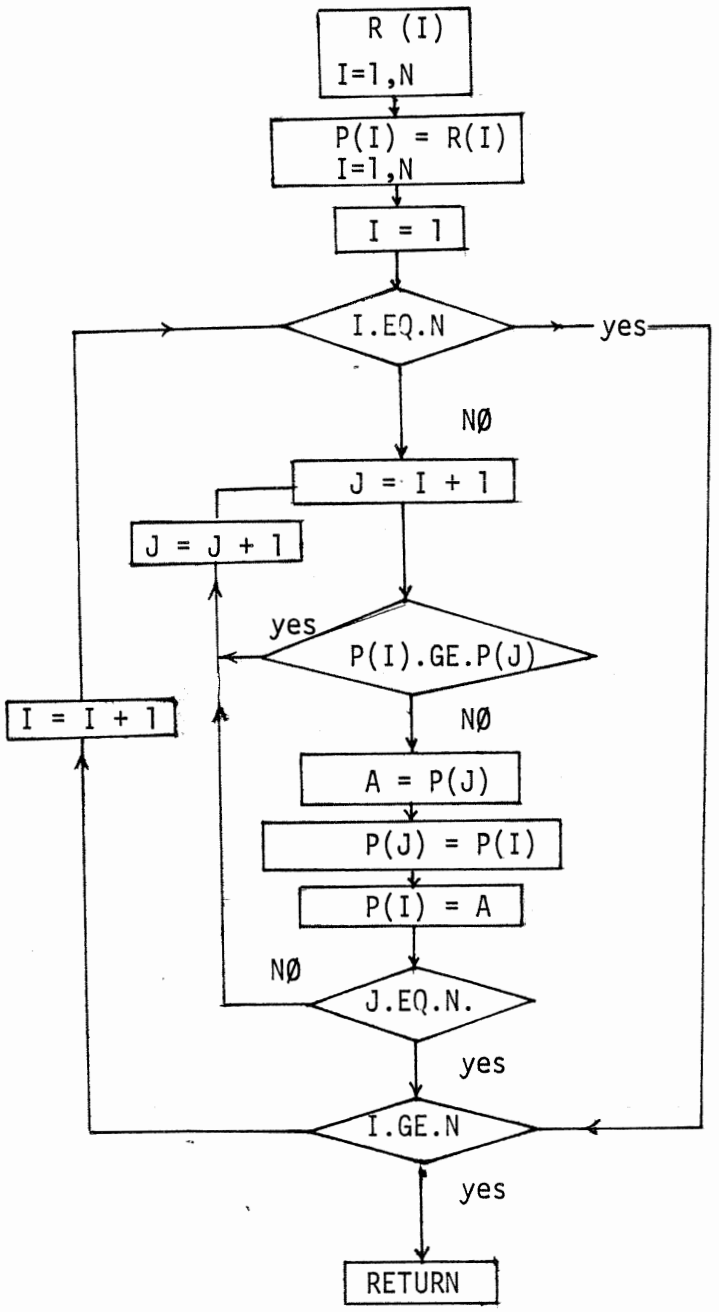

Effect of scheduled maintenance

In the previous section we have divided the year into two periods: (five months without planned maintenance and seven months with planned maintenance). This choice has been made according to the E.E.A. practice.

To check the effect of the period of maintenance on the average risk index, we have chosen different scheduled maintenance programs:

- One month without maintenance (Dec.) and 8.9% of available capacity in maintenance during the rest of the year.
- two months without maintenance (Dec. & Jan.) and 9.8% of the available capacity in maintenance during the rest of the year.
- three months without maintenance (Nov.,Dec. & Jan.) and 10.9% of the available capacity in maintenance during the rest of the year.
- Four months without maintenance (Nov.,Dec., Jan. & Feb.) and 12.25% of the available capacity in maintenance during the rest of the year.
- Five months without maintenance (Oct.,Nov., Dec., Jan. & Feb.) and 14% of the available maintenance during the rest of the year.
- Seven months without maintenance (Sept., Oct., Nov., Dec., Jan., Feb. & March) and 19.6% of the available capacity in maintenance during the rest of the year.

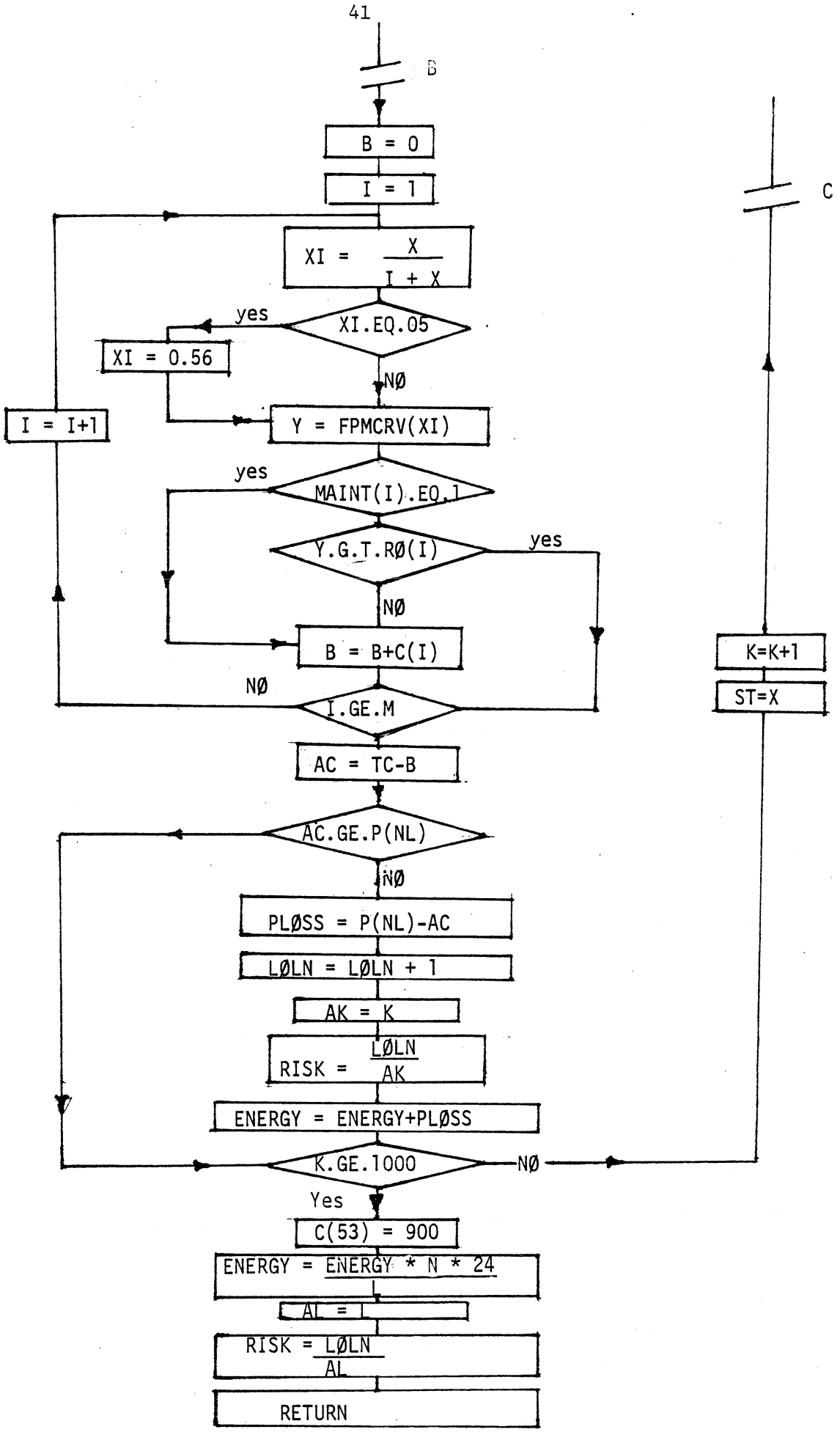
B
B = 0
I = 1
XI = X / I + X
XI.EQ.05
yes
XI = 0.56
NØ
Y = FPMCRV(XI)
I = I+1
MAINT(I).EQ.1
yes
Y.G.T.RØ(I)
yes
NØ
B = B+C(I)
NØ
I.GE.M
AC = TC-B
AC.GE.P(NL)
NØ
PLØSS = P(NL)-AC
LØLN = LØLN + 1
AK = K
RISK = LØLN / AK
ENERGY = ENERGY+PLØSS
K.GE.1000
NØ
Yes
C(53) = 900
ENERGY = ENERGY * N * 24
AL =
RISK = LØLN / AL
RETURN
C
K=K+1
ST=X

SUBROUTINE PERUNI

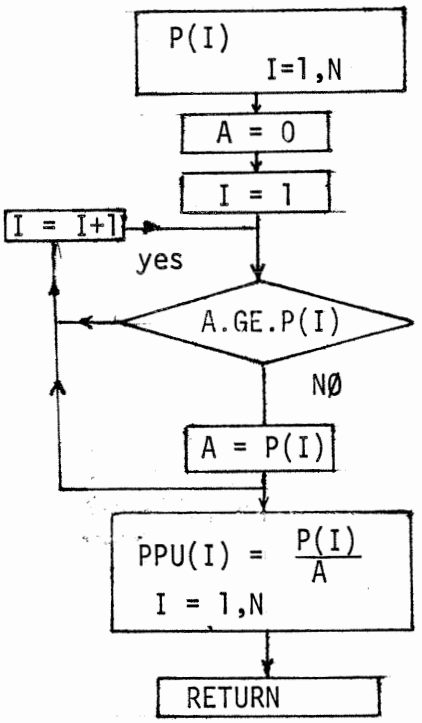

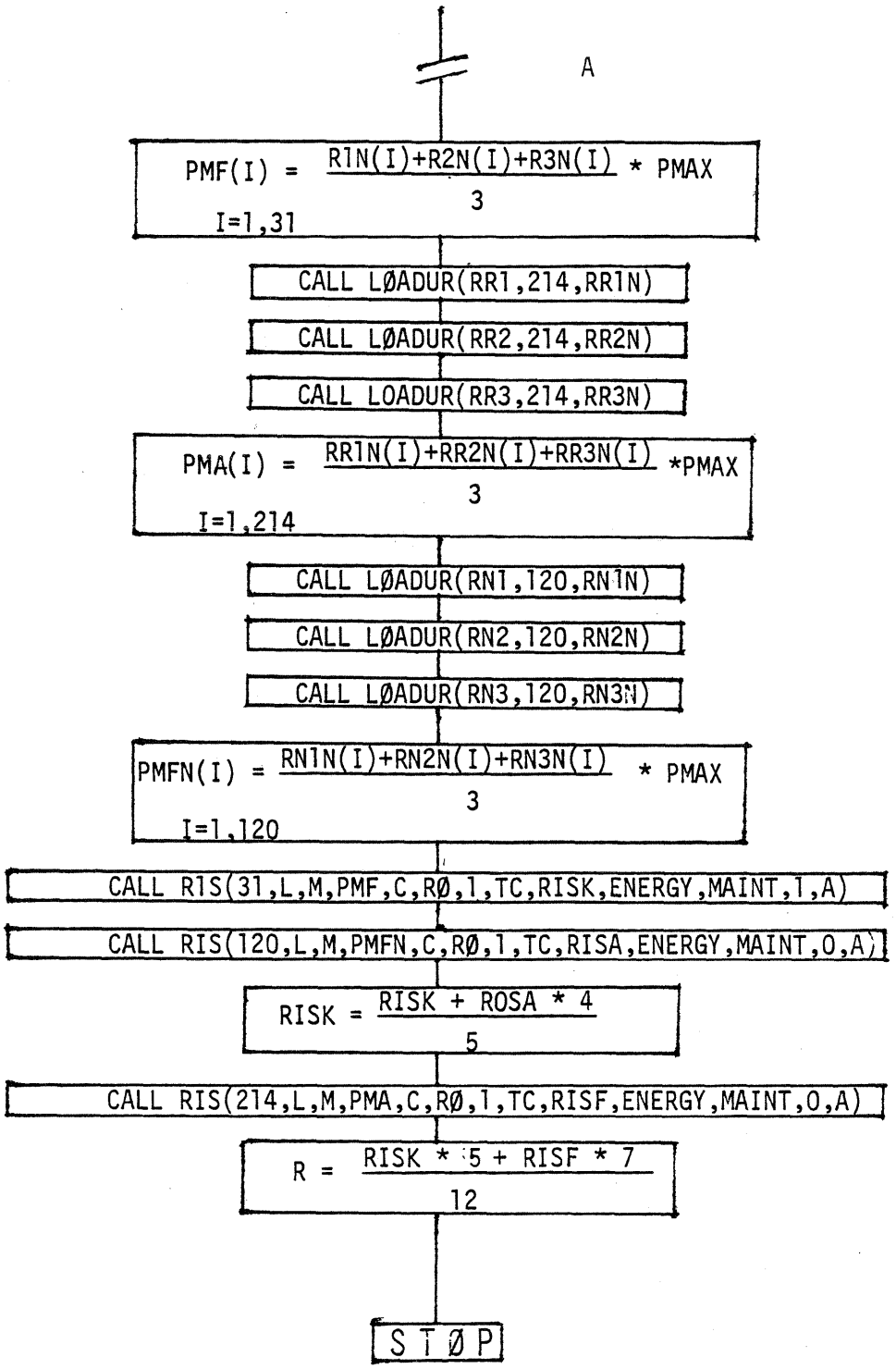
A
PMF(I) = (R1N(I)+R2N(I)+R3N(I)) / 3 * PMAX
I=1,31
CALL LØADUR(RR1,214,RR1N)
CALL LØADUR(RR2,214,RR2N)
CALL LOADUR(RR3,214,RR3N)
PMA(I) = (RR1N(I)+RR2N(I)+RR3N(I)) / 3 *PMAX
I=1,214
CALL LØADUR(RN1,120,RN1N)
CALL LØADUR(RN2,120,RN2N)
CALL LØADUR(RN3,120,RN3N)
PMFN(I) = (RN1N(I)+RN2N(I)+RN3N(I)) / 3 * PMAX
I=1,120
CALL RIS(31,L,M,PMF,C,RØ,1,TC,RISK,ENERGY,MAINT,1,A)
CALL RIS(120,L,M,PMFN,C,RØ,1,TC,RISA,ENERGY,MAINT,0,A)
RISK = (RISK + ROSA * 4) / 5
CALL RIS(214,L,M,PMA,C,RØ,1,TC,RISF,ENERGY,MAINT,0,A)
R = (RISK * 5 + RISF * 7) / 12
STØP

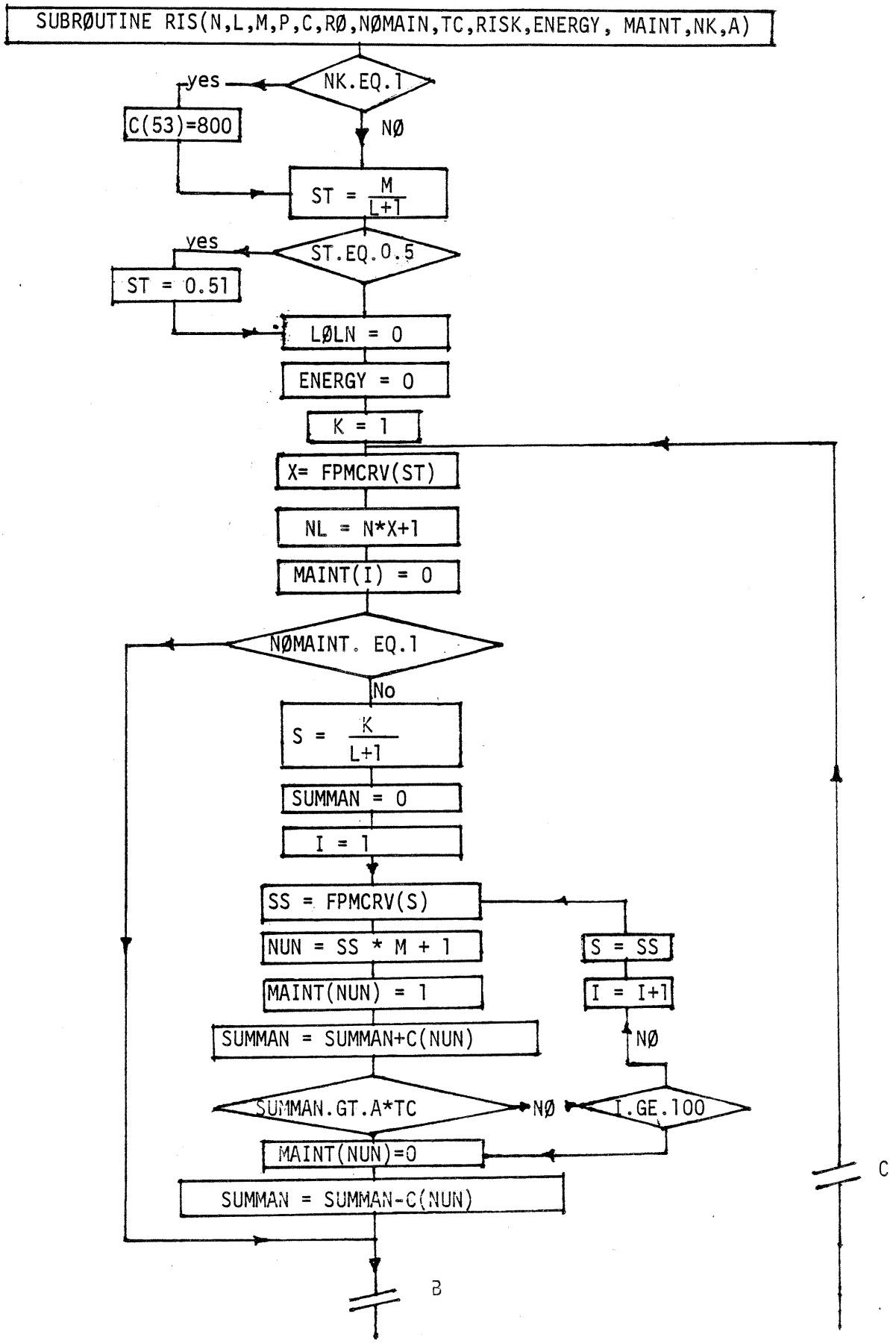
SUBRØUTINE RIS(N,L,M,P,C,RØ,NØMAIN,TC,RISK,ENERGY, MAINT,NK,A)
NK.EQ.1
yes
C(53)=800
NØ
ST = M/(L+1)
ST.EQ.0.5
yes
ST = 0.51
LØLN = 0
ENERGY = 0
K = 1
X= FPMCRV(ST)
NL = N*X+1
MAINT(I) = 0
NØMAINT. EQ.1
No
S = K/(L+1)
SUMMAN = 0
I = 1
SS = FPMCRV(S)
NUN = SS * M + 1
MAINT(NUN) = 1
SUMMAN = SUMMAN+C(NUN)
S = SS
I = I+1
NØ
SUMMAN.GT.A*TC
NØ
I.GE.100
MAINT(NUN)=0
SUMMAN = SUMMAN-C(NUN)
B
C

DATE			ELEMENT NO.	TIME		TOTAL DURATION			F.O.R.
D	M	Y		FAILURE	OPERATION	FAILURE	OPERATION	SUM.	
01	01	75	15	00-00	26328-00				
02	01	78	"	00-05	695-55				
31	01	78	"	00-15	503-45				
21	02	78	"	03-24	1700-36				
03	05	78	"	00-18	359-42				
18	05	78	"	00-05	215-55				
27	05	78	"	00-07	1991-53				
18	08	78	"	00-20	23-40				
19	08	78	"	00-19	527-41				
10	09	78	"	00-10	143-50				
16	09	78	"	385-00	71-00				
05	10	78	"	00-40	2111-20				
31	12	78	"	00-00					
						390-43	34673-17	35064	0.011,142,9
01	01	75	16	00-00	4632-00				
13	07	75	"	02-55	45-05				
15	07	75	"	326-00	994-00				
08	09	75	"	00-05	1223-55				
29	10	75	"	00-44	3191-16				
10	03	76	"	01-25	310-35				
23	03	76	"	01-06	4726-54				

DATE			ELEMENT NO.	TIME		TOTAL DURATION			F.O.R.
D	M	Y		FAILURE	OPERATION	FAILURE	OPERATION	SUM.	
06	10	76	16	00-07	71-53				
09	10	76	"	00-06	743-54				
09	11	76	"	00-04	839-59				
14	12	76	"	00-10	17951-50				
31	12	78	"	00-00					
						332-42	34732-18	35064	0.009,459,8
01	01	75	17	00-00	4632-00				
13	07	75	"	01-14	46-46				
15	07	75	"	00-16	6047-44				
23	03	76	"	01-33	4798-27				
09	10	76	"	00-10	647-50				
05	11	76	"	00-01	95-59				
09	11	76	"	00-14	14663-46				
13	07	78	"	00-03	4127-57				
31	12	78	"	00-00					
						3-31	35060-29	35064	0.000,100,2

DATE			ELEMENT NO.	TIME		TOTAL DURATION			F.O.R.
D	M	Y		FAILURE	OPERATION	FAILURE	OPERATION	SUM.	
01	01	75	18	00-00	4824-00				
21	07	75	"	00-02	664-58				
17	08	75	"	00-09	25463-51				
13	07	78	"	04-53	4123-07				
31	12	78	"	00-00					
						5-04	35058-56	35064	0.000,144,4
01	01	75	19	00-00	240-00				
11	01	75	"	03-23	14396-37				
02	09	76	"	00-02	23-58				
03	09	76	"	10-50	9181-10				
21	09	77	"	00-05	7079-55				
13	07	78	"	01-15	4126-45				
31	12	78	"	00-00					
						15-35	35048-25	35064	0.004,434,0
01	01	75	20	00-00	4824-00				
21	07	75	"	06-37	2273-23				
24	10	75	"	00-01	4727-59				
08	05	76	"	00-35	2831-25				
03	09	76	"	00-10	23-50				
04	09	76	"	13-40	10-20				
05	09	76	"	00-07	15599-53				

DATE			ELEMENT NO.	TIME		TOTAL DURATION			F.O.R.
D	M	Y		FAILURE	OPERATION	FAILURE	OPERATION	SUM.	
17	06	78	20	00-05	599-55				
12	07	78	"	00-08	23-52				
13	07	78	"	00-23	4127-37				
31	12	78	"	00-00					
						21-46	35042-14	35064	0.000,62
01	01	75	21	00-00	4800-00				
20	07	75	"	02-46	21-14				
21	07	75	"	07-08	10624-52				
06	10	76	"	00-42	119-18				
11	10	76	"	01-03	7102-57				
03	08	77	"	00-15	8255-45				
13	07	78	"	00-55	4127-05				
31	12	78	"	00-00					
						12-49	35051-11	35064	0.000,365,5

DATE			ELEMENT NO.	TIME		TOTAL DURATION			F.O.R.
D	M	Y		FAILURE	OPERATION	FAILURE	OPERATION	SUM.	
01	01	75	22	00-00	2208-00				
03	04	75	"	00-05	21719-55				
24	09	77	"	00-20	215-40				
03	10	77	"	00-30	287-30				
15	10	77	"	00-05	1367-55				
11	12	77	"	00-02	6527-58				
09	09	78	"	00-05	575-55				
03	10	78	"	07-09	160-51				
10	10	78	"	13-24	1978-36				
31	12	78	"	00-00					
						21-40	35042-20	35064	0.000,617,9
01	01	75	23	00-00	240-00				
11	01	75	"	01-04	1966-56				
03	04	75	"	00-05	22223-55				
15	10	77	"	00-05	10631-55				
31	12	78	"	00-00					
						1-14	35062-46	35064	0.000,035,1

DATE			ELEMENT NO.	TIME		TOTAL DURATION			F.O.R.
D	M	Y		FAILURE	OPERATION	FAILURE	OPERATION	SUM.	
01	01	75	24	00-00	10416-00				
10	03	76	"	00-05	1295-55				
03	05	76	"	02-48	861-12				
08	06	76	"	00-07	1607-53				
14	08	76	"	00-05	95-55				
18	08	76	"	01-35	1150-25				
05	10	76	"	00-10	23-50				
06	10	76	"	02-13	69-47				
09	10	76	"	00-07	7151-53				
03	08	77	"	08-25	1263-35				
25	09	77	"	02-32	5853-28				
27	07	78	"	25-49	3142-11				
06	10	78	"	07-05	2080-55				
31	12	78	"	00-00					
						51-01	35012-59	35064	0,001.454,9

DATE			ELEMENT NO.	TIME		TOTAL DURATION			F.O.R.
D	M	Y		FAILURE	OPERATION	FAILURE	OPERATION	SUM.	
01	01	75	25	00-00	7055-00				
22	10	75	"	00-10	1271-50				
14	12	75	"	00-37	3383-23				
03	05	76	"	02-48	1365-12				
29	06	76	"	00-01	143-59				
05	07	76	"	00-02	959-58				
14	08	76	"	00-05	143-55				
20	08	76	"	16-21	223-39				
30	08	76	"	00-14	71-46				
02	09	76	"	00-02	7031-58				
22	6	77	"	05-58	1242-02				
13	08	77	"	01-35	94-25				
17	08	77	"	00-05	287-55				
29	08	77	"	11-04	12-56				
30	08	77	"	30-07	6449-53				
27	05	78	"	25-44	1102-16				
13	07	78	"	00-05	4127-55				
31	12	78	"	00-00					
						95-21	34968-39	35064	0.002,719,3

DATE			ELEMENT NO.	TIME		TOTAL DURATION			F.O.R.
D	M	Y		FAILURE	OPERATION	FAILURE	OPERATION	SUM.	
01	01	75	26	00-00	3648-00				
02	06	75	"	00-30	17087.30				
14	05	77	"	00-07	263-53				
25	05	77	"	00-51	11293.09				
08	09	78	"	00-25	2759-35				
31	12	78	"	00-00					
						11-53	35052-07	35064	0.000,338,9

DATE			ELEMENT NO.	TIME		TOTAL DURATION			F.O.R.
D	M	Y		FAILURE	OPERATION	FAILURE	OPERATION	SUM.	
01	01	75	27	00-00	2136-00				
31	03	75	"	02-30	2493-30				
13	07	75	"	00-05	6359-55				
03	04	76	"	00-05	8015-55				
03	03	77	"	00-15	16055-45				
31	12	78	"	00-00					
						2-55	35061-05	35064	0.000.026,1
01	01	75	28	00-00	1824-00				
18	03	75	"	00-24	7967-36				
13	02	76	"	00-10	25271-50				
31	12	78	"	00-00					
						00-34	35062-26	35064	0.000,016,1
01	01	75	29	00-00	9888-00				
17	02	76	"	00-03	12623-57				
27	07	76	"	00-08	47-52				
29	07	76	"	00-14	2855-46				
25	11	77	"	03-27	908-33				
02	01	78	"	00-05	5927-55				
06	09	78	"	00-37	2807-23				
31	12	78	"	00-00					
						4-34	35059-26	35064	0.000,130,2

DATE			ELEMENT NO.	TIME		TOTAL DURATION			F.O.R.
D	M	Y		FAILURE	OPERATION	FAILURE	OPERATION	SUM.	
01	01	75	30	00-00	6888-00				
15	10	75	"	00-02	2495-58				
27	01	76	"	00-03	4775-57				
13	08	76	"	05-20	474-40				
02	09	76	"	01-54	4198-06				
24	02	77	"	05-00	6571-00				
25	11	77	"	00-05	6839-55				
06	09	78	"	00-03	2807-57				
31	12	78	"	00-00					
						12-27	35051-33	35064	0.000,355
01	01	75	31	00-00	20400-oo				
30	04	77	"	05-18	2514-42				
13	08	77	"	01-35	9334-25				
06	09	78	"	02-52	1053-08				
20	10	78	"	26-32	21-28				
22	10	78	"	105-23	854-37				
01	12	78	"	00-05	743-55				
31	12	78	"	00-00					
						141-45	34922-15	35064	0.004,046,6

DATE			ELEMENT NO.	TIME		TOTAL DURATION			F.O.R.
D	M	Y		FAILURE	OPERATION	FAILURE	OPERATION	SUM.	
01	01	75	32	00-00	16272-00				
09	11	76	"	01-18	2566-42				
24	02	77	"	05-02	1554-58				
30	04	77	"	15-38	2504-22				
13	08	77	"	01-35	9310-25				
05	09	78	"	00-05	23-55				
06	09	78	"	02-53	2061-07				
01	12	78	"	00-05	743-55				
31	12	78	"	00-00					
						26-36	35037-24	35064	0.000,758,6

Time to failure – Operation cumulative frequency distribution

Time to repair – Failure cumulative frequency distribution

ELEMENT NO.	OPERATION TIME	OPERATION FREQUENCY	CUMULATIVE OPERATION FREQUENCY	FAILURE TIME	FAILURE FREQUENCY	CUMULATIVE FAILURE FREQUENCY
1	191-58	1	0.25	00-02	1	0.334
	4224-00	1	0.50	00-03	1	0.667
	9479-57	1	0.75	00-10	1	1.00
	21167-50	1	1.00			
2	35064-00	1	1.00	00-00	1	1.00
3	1296-00	1	0.167	00-02	1	0.20
	1367-00	1	0.333	00.03	1	0.40
	3239-57	1	0.50	00-05	1	0.60
	3503-58	1	0.667	00-24	1	0.80
	7775-55	1	0.833	353-46	1	1.00
	17256-14	1	1.00			
4	47-57	1	0.071	00-01	1	0.077
	71-52	1	0.143	00-02	1	0.154
	71-55	1	0.214	00-03	1	0.23
	111-58	1	0.286	00-05	2	0.385
	143-50	1	0.357	00-07	1	0.462
	166-25	1	0.428	00-08	1	0.538
	1007-59	1	0.500	00-10	2	0.692
	2136-00	1	0.571	01-35	1	0.769
	2805-35	1	0.643	02-25	1	0.846
	3815-53	1	0.714	02-57	1	0.923

ELEMENT NO.	OPERATION TIME	OPERATION FREQUENCY	CUMULATIVE OPERATION FREQUENCY	FAILURE TIME	FAILURE FREQUENCY	CUMULATIVE FAILURE FREQUENCY
4	3981-03	1	0.786	08-02	1	1.00
	4175-58	1	0.857			
	7559-50	1	0.929			
	8951-55	1	1.00			
5	215-47	1	0.125	00-03	1	0.143
	815-56	1	0.25	00-04	2	0.429
	911-52	1	0.375	00-08	1	0.571
	934-25	1	0.500	00-13	1	0.714
	3263-56	1	0.625	01-35	1	0.857
	3381-33	1	0.75	02-27	1	1.00
	10079-57	1	0.875			
	15456-00	1	1.00			
6	1104-00	1	0.25	00-05	1	0.333
	5207-50	1	0.50	00-10	1	0.667
	8687-41	1	0.75	00-19	1	1.00
	20063-55	1	1.00			
7	5207-50	1	0.25	00-03	1	0.333
	6455-55	1	0.50	00-05	1	0.667
	9792-00	1	0.75	00-10	1	1.00
	13607-57	1	1.00			

ELEMENT NO.	OPERATION TIME	OPERATION FREQUENCY	CUMULATIVE OPERATION FREQUENCY	FAILURE TIME	FAILURE FREQUENCY	CUMULATIVE FAILURE FREQUENCY
8	1979-00	1	0.333	00-02	1	0.50
	7271-58	1	0.667	13-00	1	1.00
	25800-00	1	1.00			
9	240-00	1	0.50	01-04	1	1.00
	34822-56	1	1.00			
10	545-46	1	0.25	00-05	1	0.333
	5495-55	1	0.50	00-11	1	0.667
	11280-00	1	0.75	06-14	1	1.00
	17735-49	1	1.00			
11	35064-00	1	1.00	00-00	1	1.00
12	71-42	1	0.056	00-01	1	0.059
	71-58	1	0.111	00-02	2	0.176
	191-20	1	0.167	00-05	2	0.294
	238-30	1	0.222	00-06	1	0.353
	407-52	1	0.278	00-07	1	0.411
	695-34	1	0.333	00-08	2	0.529
	949-13	1	0.389	00-09	1	0.588
	1175-55	1	0.444	00-12	1	0.647
	1319-51	1	0.500	00-18	1	0.706
	2063-54	1	0.556	00-26	1	0.765
	2110-32	1	0.611	00-40	1	0.823

ELEMENT NO.	OPERATION TIME	OPERATION FREQUENCY	CUMULATIVE OPERATION FREQUENCY	FAILURE TIME	FAILURE FREQUENCY	CUMULATIVE FAILURE FREQUENCY
	2160-00	1	0.667	01-28	1	0.882
	2423-55	1	0.722	01-30	1	0.941
	2495-59	1	0.778	58-47	1	1.00
12	3863-58	1	0.833			
	4295-52	1	0.889			
	4919-53	1	0.944			
	5543-48	1	1.00			
	23-40	1	0.083	00-05	2	0.182
	71-00	1	0.167	00-07	1	0.273
	143-50	1	0.250	00-10	1	0.364
	215-55	1	0.333	00-15	1	0.454
	359-42	1	0.417	00-18	1	0.545
13	503-45	1	0.500	00-19	1	0.636
	527-41	1	0.583	00-20	1	0.727
	695-55	1	0.667	00-40	1	0.818
	1700-36	1	0.750	03-24	1	0.909
	1991-53	1	0.833	385-00	1	1.00
	2111-20	1	0.916			
	26328-00	1	1.00			

ELEMENT NO.	OPERATION TIME	OPERATION FREQUENCY	CUMULATIVE OPERATION FREQUENCY	FAILURE TIME	FAILURE FREQUENCY	CUMULATIVE FAILURE FREQUENCY
14	71-42	1	0.056	00-01	1	0.059
	71-58	1	0.111	00-02	2	0.176
	191-20	1	0.167	00-05	2	0.294
	238-30	1	0.222	00-06	1	0.353
	407-52	1	0.278	00-07	1	0.411
	695-34	1	0.333	00-08	2	0.529
	949-13	1	0.389	00-09	1	0.588
	1175-55	1	0.444	00-12	1	0.647
	1319-51	1	0.500	00-18	1	0.706
	2063-54	1	0.556	00-26	1	0.765
	2110-32	1	0.611	00-40	1	0.823
	2160-00	1	0.667	01-28	1	0.882
	2423-55	1	0.722	01-30	1	0.941
	2495-59	1	0.778	58-47	1	1.00
	3863-58	1	0.833			
	4295-52	1	0.889			
	4919-53	1	0.944			
	5543-48	1	1.00			

ELEMENT NO.	OPERATION TIME	OPERATION FREQUENCY	CUMULATIVE OPERATION FREQUENCY	FAILURE TIME	FAILURE FREQUENCY	CUMULATIVE FAILURE FREQUENCY
15	23-40	1	0.083	00-05	2	0.182
	71-00	1	0.167	00-07	1	0.273
	143-50	1	0.250	00-10	1	0.364
	215-55	1	0.333	00-15	1	0.454
	359-42	1	0.417	00-18	1	0.545
	503-45	1	0.500	00-19	1	0.636
	527-41	1	0.583	00-20	1	0.727
	695-55	1	0.667	00-40	1	0.818
	1700-36	1	0.750	03-24	1	0.909
	1991-53	1	0.833	385-00	1	1.00
	2111-20	1	0.916			
	26328-00	1	1.00			
16	45-05	1	0.09	00-04	1	0.1
	71-53	1	0.182	00-05	1	0.2
	310-35	1	0.273	00-06	1	0.3
	743-54	1	0.364	00-07	1	0.4
	839-59	1	0.454	00-10	1	0.5
	994-00	1	0.545	00-44	1	0.6
	1223-55	1	0.636	01-06	1	0.7
	3191-16	1	0.727	01-25	1	0.8
	4632-00	1	0.818	02-55	1	0.9

ELEMENT NO.	OPERATION TIME	OPERATION FREQUENCY	CUMULATIVE OPERATION FREQUENCY	FAILURE TIME	FAILURE FREQUENCY	CUMULATIVE FAILURE FREQUENCY
16	4726-54	1	0.909	326-00	1	1.00
	17951-50	1	1.00			
17	46-46	1	0.125	00-01	1	0.143
	95-59	1	0.25	00-03	1	0.286
	647-50	1	0.375	00-10	1	0.429
	4127-57	1	0.50	00-14	1	0.571
	4632-00	1	0.625	00-16	1	0.714
	4798-27	1	0.75	01-14	1	0.857
	6047-44	1	0.875	01-33	1	1.00
	14663-46	1	1.00			
18	647-58	1	0.25	00-02	1	0.333
	4123-07	1	0.50	00-09	1	0.667
	4824-00	1	0.75	04-53	1	1.00
	25463-51	1	1.00			
19	23-58	1	0.167	00-02	1	0.2
	240-00	1	0.333	00-05	1	0.4
	4126-45	1	0.50	01-15	1	0.6
	7079-55	1	0.667	03-23	1	0.8
	9181-10	1	0.833	10-50	1	1.00
	14396-37	1	1.00			

ELEMENT NO.	OPERATION TIME	OPERATION FREQUENCY	CUMULATIVE OPERATION FREQUENCY	FAILURE TIME	FAILURE FREQUENCY	CUMULATIVE FAILURE FREQUENCY
	10-20	1	0.1	00-01	1	0.111
	23-50	1	0.2	00-05	1	0.222
	23-52	1	0.3	00-07	1	0.333
	599-55	1	0.4	00-08	1	0.444
20	2273-23	1	0.5	00-10	1	0.556
	2831-25	1	0.6	00-23	1	0.667
	4127-37	1	0.7	00-35	1	0.778
	4727-59	1	0.8	06-37	1	0.889
	4824-00	1	0.9	13-40	1	1.00
	15599-53	1	1.0			
	21-14	1	0.143	00-15	1	0.167
	119-18	1	0.286	00-42	1	0.333
	4127-05	1	0.429	00-55	1	0.50
21	4800-00	1	0.571	01-03	1	0.667
	7102-57	1	0.714	02-46	1	0.833
	8255-45	1	0.857	07-08	1	1.00
	10624-52	1	1.00			

ELEMENT NO.	OPERATION TIME	OPERATION FREQUENCY	CUMULATIVE OPERATION FREQUENCY	FAILURE TIME	FAILURE FREQUENCY	CUMULATIVE FAILURE FREQUENCY
22	160-51	1	0.111	00-02	1	0.125
	215-40	1	0.222	00-05	3	0.50
	287-30	1	0.333	00-20	1	0.625
	575-55	1	0.444	00-30	1	0.75
	1367-55	1	0.556	07-09	1	0.875
	1978-36	1	0.667	13-24	1	1.00
	2208-00	1	0.778			
	6527-58	1	0.889			
	21719-55	1	1.00			
23	240-00	1	0.25	00-05	2	0.667
	1966-56	1	0.50	01-04	1	1.00
	10631-55	1	0.75			
	22223-55	1	1.00			
24	23-50	1	0.077	00-05	2	0.167
	69-47	1	0.154	00-07	2	0.333
	95-55	1	0.231	00-10	1	0.417
	861-12	1	0.308	01-35	1	0.50
	1150-25	1	0.385	02-13	1	0.583
	1263-35	1	0.462	02-32	1	0.667
	1295-55	1	0.538	02-48	1	0.75
	1607-53	1	0.615	07-05	1	0.833

ELEMENT NO.	OPERATION TIME	OPERATION FREQUENCY	CUMULATIVE OPERATION FREQUENCY	FAILURE TIME	FAILURE FREQUENCY	CUMULATIVE FAILURE FREQUENCY
	2080-55	1	0.692	08-25	1	0.917
	3142-11	1	0.769	25-49	1	1.00
24	5853-28	1	0.846			
	7151-53	1	0.923			
	10416-00	1	1.00			

ELEMENT NO.	OPERATION TIME	OPERATION FREQUENCY	CUMULATIVE OPERATION FREQUENCY	FAILURE TIME	FAILURE FREQUENCY	CUMULATIVE FAILURE FREQUENCY
	12-56	1	0.059	00-01	1	0.0625
	71-46	1	0.118	00-02	2	0.1875
	94-25	1	0.176	00-05	3	0.375
	143-55	1	0.235	00-10	1	0.4375
	143-59	1	0.294	00-14	1	0.500
	223-39	1	0.353	00-37	1	0.5625
	287-55	1	0.418	01-35	1	0.625
	959-58	1	0.471	02-48	1	0.6875
25	1102-16	1	0.529	05-58	1	0.75
	1242-02	1	0.588	11-04	1	0.8125
	1271-50	1	0.647	16-21	1	0.875
	1365-12	1	0.706	25-44	1	0.9375
	3383-23	1	0.765	30-07	1	1.00
	4127-55	1	0.824			
	6449-53	1	0.882			
	7031-58	1	0.941			
	7055-00	1	1.00			

ELEMENT NO.	OPERATION TIME	OPERATION FREQUENCY	CUMULATIVE OPERATION FREQUENCY	FAILURE TIME	FAILURE FREQUENCY	CUMULATIVE FAILURE FREQUENCY
26	263-53	1	0.2	00-07	1	0.25
	2759-35	1	0.4	00-25	1	0.50
	3648-00	1	0.6	00-30	1	0.75
	11293-09	1	0.8	00-51	1	1.00
	17087-30	1	1.00			
27	2136-00	1	0.2	00-05	2	0.50
	2493-30	1	0.4	00-15	1	0.75
	6359-55	1	0.6	02-30	1	1.00
	8015-55	1	0.8			
	16055-45	1	1.00			
28	1824-00	1	0.333	00-10	1	0.50
	7967-36	1	0.667	00-24	1	1.00
	25271-50	1	1.00			
29	47-52	1	0.143	00-03	1	0.167
	908-33	1	0.286	00-05	1	0.333
	2807-23	1	0.429	00-08	1	0.50
	2855-46	1	0.571	00-14	1	0.667
	5927-55	1	0.714	00-37	1	0.833
	9888-00	1	0.857	03-27	1	1.00
	12623-57	1	1.00			

ELEMENT NO.	OPERATION TIME	OPERATION FREQUENCY	CUMULATIVE OPERATION FREQUENCY	FAILURE TIME	FAILURE FREQUENCY	CUMULATIVE FAILURE FREQUENCY
30	474-40	1	0.125	00-02	1	0.143
	2495-58	1	0.25	00-03	2	0.429
	2807-57	1	0.375	00-05	1	0.571
	4198-06	1	0.50	01-54	1	0.714
	4775-57	1	0.625	05-00	1	0.857
	6571-00	1	0.75	05-20	1	1.00
	6839-55	1	0.875			
	6888-00	1	1.00			
31	21-28	1	0.143	00-05	1	0.167
	743-55	1	0.286	01-35	1	0.333
	854-37	1	0.429	02-52	1	0.50
	1053-08	1	0.571	05-18	1	0.667
	2514-42	1	0.714	26-32	1	0.833
	9334-25	1	0.857	105-23	1	1.00
	20400-00	1	1.00			

ELEMENT NO.	OPERATION TIME	OPERATION FREQUENCY	CUMULATIVE OPERATION FREQUENCY	FAILURE TIME	FAILURE FREQUENCY	CUMULATIVE FAILURE FREQUENCY
32	23-55	1	0.125	00-05	2	0.286
	743-55	1	0.25	01-18	1	0.429
	1554-58	1	0.375	01-35	1	0.571
	2061-07	1	0.50	02-53	1	0.714
	2504-22	1	0.625	05-02	1	0.857
	2566-42	1	0.75	15-38	1	1.00
	9310-25	1	0.875			
	16272-00	1	1.00			

REPORT. 2

ALGORITHM FOR RANDOM MODELLING OF POWER TRANSMISSION SYSTEMS " RAMPOT "

S. EL - SOBKI
H. ANIS
M.EL - SOBKI

ALGORITHM FOR RANDOM MODELLING OF POWER TRANSMISSION SYSTEM "RAMPOT"

1. General

This study outlines the structure and mode of use of a Random modelling of power transmission algorithm (RAMPOT). The algorithm devised in this study aims at establishing a global contingency profile for a given transmission network. This is achieved through successive simulation of random "events" which the system experiences. Events may be :

1. A forced failure of an element in the network.
2. The outage of one or more elements in the network upon undergoing a state of overloading which normally comes as a consequence of a forced failure of another element yet graphically related element.
3. The restoration of an element.

The grounds for running the program are principally the random, statistically independent, fail/operation cycle of each and every element in the network. These cycles are numerically developed as explained in the

(transmission lines data study).

The fail/operation cycle is reproduced in the program in a Monte-Carlo fashion and hence it is used in the overall system simulation.

Two principal routines are devised to accomplish the above described simulation. A Monte-Carlo routine which reproduces the fail/operation chain for all elements, and the contingency routine is repeatidly called to reevaluate the state of system power flows when a change is materialized. A change may be the interruption (failure) or restoration of at least one element.

2. Program Objectives

The program should enable the evaluation of the following reliability parameters:

a) The fail/operation cycle of each element can be verified.

b) The loss of load probability at all buses can be evaluated.

c) The loss of energy probability at all buses can be evaluated.

d) The loading pattern of each element in the transmission system. This may take the form of statistical distribution of overloading.

e) The joint probability distribution of the magnitude and duration of overloading. This may serve as a guide line to the transmission system planner when he is not only concerned with the amount of overloading but also its duration.

3. List of Symbols

In the computer package RAMPOT and throughout the following text the following symbols were used :

M : NUMBER OF ELEMENTS (transmission lines)

N : NUMBER OF NODES (bus-bars)

O : OPERATION FREQUENCY

D : TIME TO-FAILURE (operation time)

Q : OPERATION CUMULATIVE FREQUENCY

F : FAILURE FREQUENCY

T : TIME-TO-REPAIR (failure time)

E : FAILURE CUMULATIVE FREQUENCY

NE : NUMBER OF AVAILABLE HISTORY POINTS (number of operation or failure events based on the performance history for each element).

FPMCRV: RANDOM NUMBER GENERATOR

XX,ZZ : LETTERS FOR RANDOM NUMBERS.

XQ : RANDOM OPERATION NUMBER

XE : RANDOM FAILURE NUMBER

XD : RANDOM OPERATION TIME

XT : RANDOM FAILURE TIME

ICOUNT : NUMBER OF STATE REVERSALS

ISTATE : ELEMENT ACTION (1 for operation, 2 for failure)

A : RANDOM NUMBER GENERATOR INITIAL VALUE(operation)

Z : RANDOM NUMBER GENERATOR INITIAL VALUE (failure)

TTT : CUMULATIVE TIME

DT : TIME INTERVAL USED IN THE SIMULATION PROCESS

NM,NK : ELEMENT IDENTIFICATION-CONNECTING NODES NM, NK,

ST : ABSOLUTE TIME

(QQ,DD,EE,TT,HX) : WORKING ARRAYS

IFLAG : CHANGE OF STATE INDICATOR

ITOTAL : TOTAL NUMBER OF SYSTEM REVERSALS

XK : SUSCEPTANCE - VOLTAGE MATRIX

N : NUMBER OF ELEMENTS(within the DC contingency subroutine).

DELK : CHANGE OF SUSCEPTANCE - VOLTAGE MATRIX

XKIN : INVERSE OF MATRIX XK

U.S.P. : UNSERVED POWER

U.S.E : UNSERVED ENERGY

BP : BUS-BAR POWER

L.O.L.P: LOSS OF LOAD PROBABILITY

L.O.E.P: LOSS OF ENERGY PROBABILITY

BFT : BUS-BAR FAULT TIME

OT : OPERATION TIME

FT : FAILURE TIME

AOT : AVERAGE OPERATION TIME

AFT : AVERAGE FAILURE TIME

ROO : RATE OF OPERATION

ROF : RATE OF FAILURE

DETR : DETERMAIN OF MATRIX XK

W : MULTIPLICATION OF XKIN BY DELK

PPI : INITIAL POWER MATRIX

PP : POWER MATRIX

P : CHANGE OF POWER MATRIX

DELOI : INTIAL VOLTAGE ANGLE

DELO : VOLTAGE ANGLE

BI : INITIAL SUSCEPTANCE MATRIX

B : SUSCEPTANCE MATRIX

V : BUS-BAR VOLTAGE

4. Data for RAMPOT Package

The following sets of data for all network elements must be supplied to the RAMPOT package :

a. Performance History, for each element the history is recorded over a number of years including the fail/operation cycle, this will be input to the routine in a frequency distribution form.

b. Impedances of the various system elements.

c. Voltages, and their angles at all bus-bars.

d. Capacity (ampicity) of each element in the system.

e. The network configuration, where elements are identified by numbers, or by their connecting nodes.

5. RAMPOT Segments

A block diagram representing the major steps of RAMPOT package is shown in Fig.(1).

The RAMPOT algorithm is mainly divided into two major segments, the Monte-Carlo main routine, and the Contingency subroutine (CON). Other segments are used as the cumulative subroutine (CUM), the linear interpolation subroutine (IN), matrix multiplication by a matrix subroutine (MM), matrix multiplication by a vector subroutine (MV), and matrix multiplication by a constant subroutine (MC).

RAMPOT block diagram

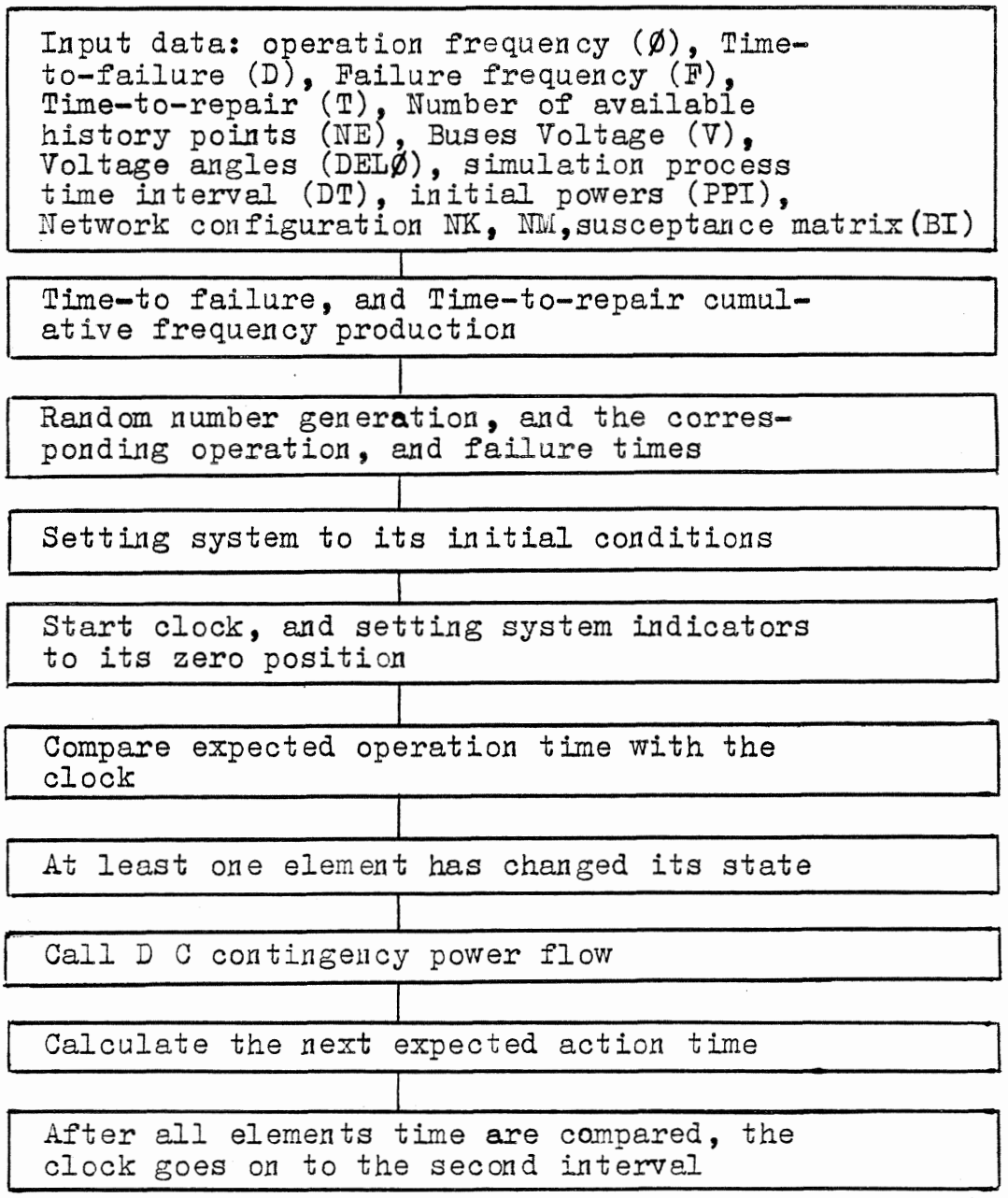

Fig.1.

6. Monte-Carlo Model

The first part in this segment is to construct a cumulative distribution for both operation and failure performance of each element.

6.1. Cumulative event data

Cumulative distributions of operation and failure performance can be constructed based on the following input data:

a) Operation frequency Ø
b) Time-to-failure D
c) Failure frequency F
d) Time-to-repair T

Each of the above input data is supplied to the algorithm in a matrix from each row representing an element, and the number of columns matches the maximum available recorded history action points, NE, these points are not equal for all elements, hence the balance of the different rows are zeros, the size of any of these matrices is (M,NE max).

Constructing the cumulative distribution for an el element J, is done through the cumulative subroutine CUM, the input of which is the action (operation or failure)

frequency Ø (J) or F (J), action time D(J) or T(J), and the number of history points NE (J) vectors. To pick up the action frequency, and action time vectors out of the data matrices, a working vectors are used. For example, the operation frequency vector of element J is the row number J of matrix Ø(M,NE), this is done using the following two statements.

```
QQ (KK)  =  Ø (J,KK)   ,  KK =1, NE(J)
DD (KK)  =  D (J,KK)   ,  KK =1, NE(J)
```

where QQ, and DD are the working vectors used as an input to (CUM) representing operation frequency data of element J. The cumulative distribution vector is calculated throughout the following equation:

```
E (I) = E (I-1) + F (I)/S   ,  I =2, NE (J)
```

where

E(1) = 0.0 (starting point)

S = action frequency summation

F = action frequency vector

E = action frequency cumulative vector

The resultant cumulative vector E (NE(J)) is transferred to a matrix containing all cumulative vectors in a row form, according to the following equation:

For operation cumulative

```
Q (J,I) = E  (J,I)          I =1,NE(J)
```

For failure cumulative

E(J,I) = E (J,I) I = 1,NE (J)

6.2. Electrical Data

The susceptance B of each element is equated to the initial susceptance matrix BI, which is an input to the segment in a symmetric matrix from BI(NxN) where N is the number of nodes (bus-bars) of the network. The diagonal elements of BI are zeros.

The power PP carried by each element is equated to the initial carried power PPI, which is an input to the segment in a skew symmetric from PPI (N x N) where N is the number of nodes (bus-bars) of the network. The diagonal elements of PPI are zero.

6.3. Random time selection

Without violating generality all elements could be considered operating at the starting instant. This means that all elements state indicators ISTATE are equal to (1).

Each element in the system is assigned two independent random number generators RNG to simulate its times between failures and operations. The random number generator assigned to simulate operation time will have an

initial value -A - depending on the element number according to the following equation :

$$A(J) = (J)/(M + 1.0)$$

where

A(J) : operation random number generator initial value for element J .

J : element number

M : total number of elements

The same goes on when simulating failure times, but with another initial value -Z- depending on the element number as follows :

$$Z(J) = (J) * 0.5/(M + 1.0)$$

where

Z(J) : Failure random number generator initial value for element J

The following step is to generate the random numbers for all elements, by calling the random number generation subroutine (FPMCRV). This is a function segment written in PLAN, the assembly language at ICL 1900-series computers, The call is done according to the following statements :

For operation:

```
     ZZ  =  FPMCRV  (A(J))
  XQ(J)  =  ZZ
```

For failure :

XX = FPMCRV (Z(J))

XE(J) = XX

The obtained random numbers shall be equated to the action cumulative distribution and the corresponding operation time is obtained out of the (cumulative frequency distribution-time) curve. An interpolation subroutine (IN) is used for this purpose. The selected ranodm time is based on the following equation;

$$\int_{0}^{ti} f(t)\, dt = R_i$$

where:

R_i : random number at step (i), (at this stage it is step one)

t_i : corresponding random time

f(t): frequency distribution function of time(t)

The input to the linear interpolation subroutine (IN) for each element J is in the form of two vectors representing the action frequency, and its duration,(Q(J), D(J)), respectively the number of history points NE(J), and the corresponding random operation cumulative frequency XQ(J). Picking up the frequency distribution and time vectors, out of the cumulative and time matrices, is done using working vectors as follows:

```
QQ(KK) = Q(J,KK)        ,  KK  =1,NE(J)
DD(KK) = D(J,KK)        ,  KK  =1,NE(J)
```

where (QQ), and (DD) are the working vectors. The random operation time (XD) is calculated by means of the following equation:

```
XT=T(L-1) +(T(L)-T(L-1))/(E(L)-(E(L-1)) * (XE-E(L-1))
```

where:

XE : random action cumulative (operation).

L : the number of history points

E(L)& E(L-1) : the limiting operating cumulative frequency distribution values, where E(L) > XE > E(L-1)

T(L)& T(L-1) : operation time corresponding to E(L)& E(L-1)

XT : random operating time corresponding to XE

The failure time shall be obtained in the same manner used to get the operation time. Both the operation time XD, and the failure time XT for all elements are then stored in two arrays XT(1,M) and XD(2,M) respectively where number one (1) indicates an up state (operation), and number two (2) indicates a down state (failure).

For all elements it is considered that the starting performance state is operation. The random time XD (I,J) is stored in vector TTT(J), which is called the cumulative time vector, this is done according to the following equation:

TTT (J) = XD(I,J) , J = I,M

6.4. Chronological Simulation

The "absolute"time ST is set to run at a constant time interval DT the selection of which is such that it is equal to, or less than, the minimum repair time.

At time zero (ST = 0.0), the total number of elements state reveals is equal to zero (ICØUNT (J)=0), the total number of system reversals is zero (ITØTAL =0), and the change of state indicator is zero indicating no changes in the system. After the first interval of time all system elements are checked for state reversal, by comparing the absolute time ST with the cumulative time of each element (TTT (J)).

If ST is less than TTT(J), it indicates that the element has not undergone a state change. After all elements have gone through the time comparison for the first interval, the clock goes on the second interval according to the following equation:

ST = ST + DT

The system state indicator IFLAG is checked; if it is still equal to zero, indicating no addition in the total number of system reversals, a new turn is started and the state checking process goes on through all elements once again.

For any element J if ST is greater than TTT(J), that indicates a change in the element state and hence the system state indicator IFLAG shall change to 1. The number of state reversals of this element is increased by one:

ICØUNT (J) = ICØUNT (J) + 1

When ST is greater than TTT(J),i.e. element J has changed its state, the new action of the element ISTATE(J) shall be indicated as

ISTATE(J) = 2

Changing from operation to failure condition is actually the first change for any element as it was considered that the clock has started when all elements were at operation conditions. When element number J changes its state from operation ISTATE(J)=1 to failure ISTATE(J)=2 the DC contingency power flow routine (CØN) shall be called to reevaluate the power flow in the network.

Going back to the main routine, element number J, which is in a failure condition is no longer an element in the network, hence its susceptance will be equal to zero.

At this instant the program computes the expected random failure time for element number J. A new random number is generated using the previous random failure

number XE of element J as an initial value for the random routine (FPMCRV) according to the following equation:

```
XX =  FPMCRV (XE (J) )
XE(J) =  XX
```

The expected random failure time is computed using the interpolation routine (IN), having for element J the failure cumulative frequency E, the time to repair T, and the number of available history points. This is done according to the following equations:

```
K = 2
QQ(KK) = E(J,KK)          ,  KK =1, NE (J)
DD(KK) = T(J,KK)          ,  KK =1, NE (J)
CALL IN (QQ , DD, NE (J), XE(J), XT (K,J)
```

where:

K = 2 indicates a failure state

QQ,DD are working vectors to pick up the J'th row out of the failure time cumulative frequency matrix E, and the time to repair matrix T.

The random failure time (XT) is calculated throughout the following equation:

```
XT = T(L-1) +(T(L) -T(L-1))/(E(L)-E(L-1))*(XE -E(L-1))
```

where

XE : random action cumulative (failure)

L : the number of history points

E(L) & E(L-1): the limiting failure frequency values, where E(L) > XE > E(L-1)

T(L)&T (L-1) : failure time corresponding to E(L) & E(L-1)

XT : random failure time corresponding to XE

After computing the failure time XT(2,J) for element number(J) its new cumulative time TTT(J) is updated as follows:

TTT(J) = TTT(J) + XT(K,J)

where K in this case is equal to 2.

The time comparison goes on till all elements are checked at this interval, then the clock goes on to the next time interval by adding DT to the absolute time ST.

During the last interval if at least one element has changed its action the state indicator IFLAG will have a value of 1, and the total number of system reversals ITOTAL shall increase

ITOTAL = ITOTAL + 1

A new turn may then start.

6.5. Restoration of an element

When element number J changes from failure to operation, the program will indicate that element number J has changed its state to operation condition(ISTATE (J)=1). To get the new distribution of power between the

different elements after element number J is regained to the network, the following technique is used.

The network is considered to be at its very initial condtions (i.e. the conditions when the time flow has started). The contigency subroutine is called to rid the system of all those elements which are already failing at that instant with the exception of the element which is to be restored.

Setting the system to its initial conditions is done using the following statements:

```
DELØ (JJ) = DELØI (JJ)        II = 1,M
PP (II,JJ)= PPI (II,JJ)       JJ = 1,M
DELK (II,JJ)=0.0              I  = 1,M
B(I,JJ)= BI (L,JJ)
```

where

I,II and JJ : are indications for elements numbers

The elements which are going through failure action, shall have ISTATE = 2, hence the DC contingency power flow shall be used to compute the new powers. The susceptance of the failed elements shall be equated to zero, this procedure of computing power flow and susceptance changes is done using one element after another for the failed elements.

For element number J which has changed its action to the operation state, the expected operation time shall

be computed, first by generating a random number using the previous random operation number for element J which is XQ (J) as an initial value for the random number generator according to the following equations:

ZZ = FPMCRV(XQ(J))

XQ(J) = ZZ

Then, by using the interpolation routine (IN), as it was explained before, the next random operation time XD, shall be computed, the input of routine (IN) is the operation cumulative frequency vector Q, the time to failure vector D, number of available history points for element J, and the random operation number XQ(J), which matches the operation cumulative frequency. After computing the operation time XD(K,J) for element J, the new cumulative time TTT(J) is computed as follows:

TTT(J) = TTT(J) + XD (K,J)

where (K) is equal to one indicating operation action.

7. DC Contigency power flow subroutine

In Fig.(2) a block diagram describes the major steps taken in the DC contingency subroutine CON to reevaluate the power flow throughout the transmission complex upon the reversal of one of its elements. The inputs of which are the Bus Bars voltage V in a vector form, the susceptance matrix B, the voltage angles at different

bus-bars DELØ in a vector form, the number of elements M forming the network, the power matrix PP, and the con- isdered element identification-connecting nodes NM(J), NK(J). The output of the D.C. contingency power flow routin (CØN) is the power changes carried by each element in the network depending on the changes in the susceptance matrix B, and the voltate angle changes DELD, hence the new power distribution matrix is computed, which is considered to be the power matrix.

DC Contingency block diagram

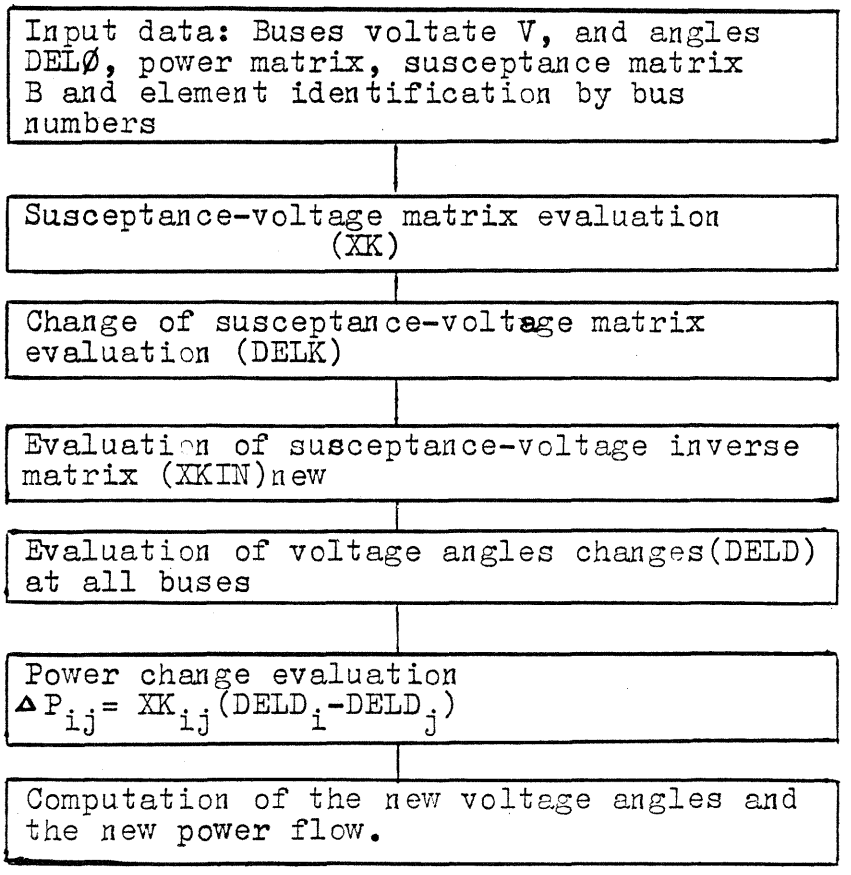

Fig.2

The first part in this segment is to evaluate the susceptance voltage matrix XK. This is based on the following input data:

a) Bus-Bar Voltage vector V

b) Elements susceptance matrix B

The diagonal elements of the susceptance-voltage matrix XK are calculated first, according to the following equation:

$$XK(I,I) = XK(I,I) + \sum V(I) * V(J) * B(I,J) \quad I = 1,N \quad J = 1,N$$

where I,J represent the node numbers. The off diagonal elements of the matrix XK are computed according to the following equation:

$$\left.\begin{aligned} XK(I,J) &= -V(I) * V(J) * B(I,J) \\ XK(J,I) &= X\ K\ (I,J) \end{aligned}\right\} \begin{aligned} I &= 1,N \\ J &= 1,N \end{aligned}$$

The next step is to evaluate the susceptance-voltage matrix changes (DELK) due to the failed element. This will only affect 4 elements of matrix (XK), these elements are XK(M,K), XK(K,M), XK(M,M)and XK(K,K)where M and K are the element identification connection nodes. The computation of DELK shall be according to the following equations:

DELK (M,M) = XK(M,K)

DELK (K,K) = DELK (M,M)

DELK (M,K) = - DELK (M,M)

DELK (M,M) = DELK (M,K)

The next segment is to evaluate the new XK matrix according to the following equations

XK (M,M) = XK(M,M) + DELK (M,M)

XK (K,K) = XK(K,K)+ DELK (K,K)

XK (M,K) = XK(M,K) + DELK (M,K)

XK (K,M) = XK(K,M) + DELK (K,M)

The next segment is the evaluation of the susceptance-voltage inverse matrix XKIN. The inverse is done only for a (2X2) matrix, the elements of which are XK(M,M) , XK(M,K), XK(K,M), XK(K,K), as this is the part of matrix (XK) which will be considered in the computation of the power changes.

The inverse computation is done according to the following equations:

DETR = XK(M,M) * XK(K,K) - XK(M,K)*XK(K,M)

XKIN (M,M) = XK (K,K)/DETR

XKIN (K,K) = XK (M,M)/DETR

XKIN (M,K) = - XK(M,K)/DETR

XKIN(K,M) = - XK(K,M)/DETR

where DETR is the determinant for the (2x2) matrix having XK(M,M) XK(M,K), XK(K,M), XK (K,K) as its elements.

The next stage is to compute the voltage angle changes DELD at all buses. This is done by multiplying the susceptance-voltage inverse matrix by the change of the susceptance voltage matrix using a matrix multiplication subroutine (M M). The result of this multiplication is then multiplied by (-1). The change of power can now be computed, according to the equation:

P(I,J) = V(I)*V(J) B(I,J)*(DELD (I)-DELD(J))

where

P(I,J) : the change in power transferred between nodes I and J

V(I),V(J): voltage at nodes I and J

B(I,J) : susceptance of the element between nodes I and J

DELD(I),DELD(J) : change of angles at nodes I and J

Then the new voltage angles at the different bus-bars and the new power distributions are computed according to the following equations:

DELØ (I) = DELO (I) + DELD (I) I = 1,N

PP(I,J) = PP(I,J) + P(I,J) I = 1,N & J=1,N

where

PP(I,J) is the power transferred between bus-bars I & J.

8. Reliability Parameters Evaluation

The reproduced fail/operation chain for all elements is constructed using the Monte-Carlo simulation. Based on this event profile for all elements, the reliability parameterts for the transmission network is evaluated, as the rate of failure, rate of operation, average failure, and operation times, loss of load probability at the different bus-bars and the loss of energy probability at the different bus-bars.

8.1. Rates of Operation and Failure

For any element, the rate of operation R.O.O. is the summation of operation times during the period under study (simulation time in our case) divided by the total period time.

The rate of failure R.O.F. is the summation of the failure times during the period under study divided by this period duration .

Both the R.O.O. and the R.O.F. is computed through the RAMPOT algorithm for all elements as follows:

$$R.O.O.(J) = \frac{OT\ (J)}{TTT(J)} \qquad J = 1,M$$

where OT(J) is the summation of operation time.

$$OT(J) = \sum XD(J)$$

$$R.O.F.(J) = \frac{FT\ (J)}{TTT(J)} \qquad J = 1,M$$

where FT(J) is the summation of failure time.

$$FT(J) = \sum XT(J)$$

8.2. Average Operation and Failure Times

The average operation time is the summation of operation times during the period under study divided by the number of operation actions the element went through.

The same goes for the average failure time which is equal to the summation of failure times during the period under study divided by the number of failure actions the element went through .

The average operation and failure time are computed through the RAMPOT algorithm for all elements as follows:

$$\text{Average Operation Time} = A.O.T. = \frac{OT\ (J)}{(ICOUNT(J)/2)} \qquad J=1,M$$

ICOUNT(J) is the total number of element reversals, and OT(J) is the summation of operation time.

$$\text{Average failure Time} = A.F.T. = \frac{FT\ (J)}{(ICOUNT(J)/2)} \qquad J=1,M$$

FT(J) is the summation of failure time.

8.3. Loss of Load Probability

The loss of load probability at any bus-bar is the duration in which the load is not sufficiently supplied divided by the total duration of the period under study.

The load may be interrupted or insufficiently supplied due to the outage of all transmission lines supplying the bus-bar, or due to unability of lines to carry all power required to be supplied.

The loss of load probability is computed through RAMPOT according to the following equations:

$$L.O.L.P. = \frac{BFT\ (NK(NZ))}{TTT(J)}$$

where BFT (NK(NZ)) is the Bus-Bar Fault Time which is the duration summation in which the load is partially or incompletely supplied at bus-bar NK and TTT(J) is the total duration of the period under study.

8.4. Loss of Energy Probability

The loss of energy probability is the ratio between the energy not served and the total energy which should be supplied during the period under study TTT(J). This is computed according to the following equation:

$$L.O.E.P. = \frac{USE\ (NK(NZ))}{TTT(J).BP(NK(NZ))}$$

USE (NK(NZ)) is the amount of unserved energy at bus-bar N K.

The output of RAMPOT lists the following results :

a- The rate of operation R.O.O. for all transmission lines.

b- The rate of failure R.O.F. for all transmission lines

c- The average operation time A.O.T. for all elements.

d- The average failure time A.F.T. for all elements.

e- The number of state reversals ICOUNT for all elements.

f- The loading pattern for each element.

g- The loss of load probability L.O.L.P. at all buses.

h- The loss of energy probability L.O.E.P. at all buses.

The above computed reliability parameters serves as a guide line to the transmission system planner.

RANDOM MODELLING OF POWER TRANSMISSION SYSTEM 'RAMPOT'

FLOW CHART

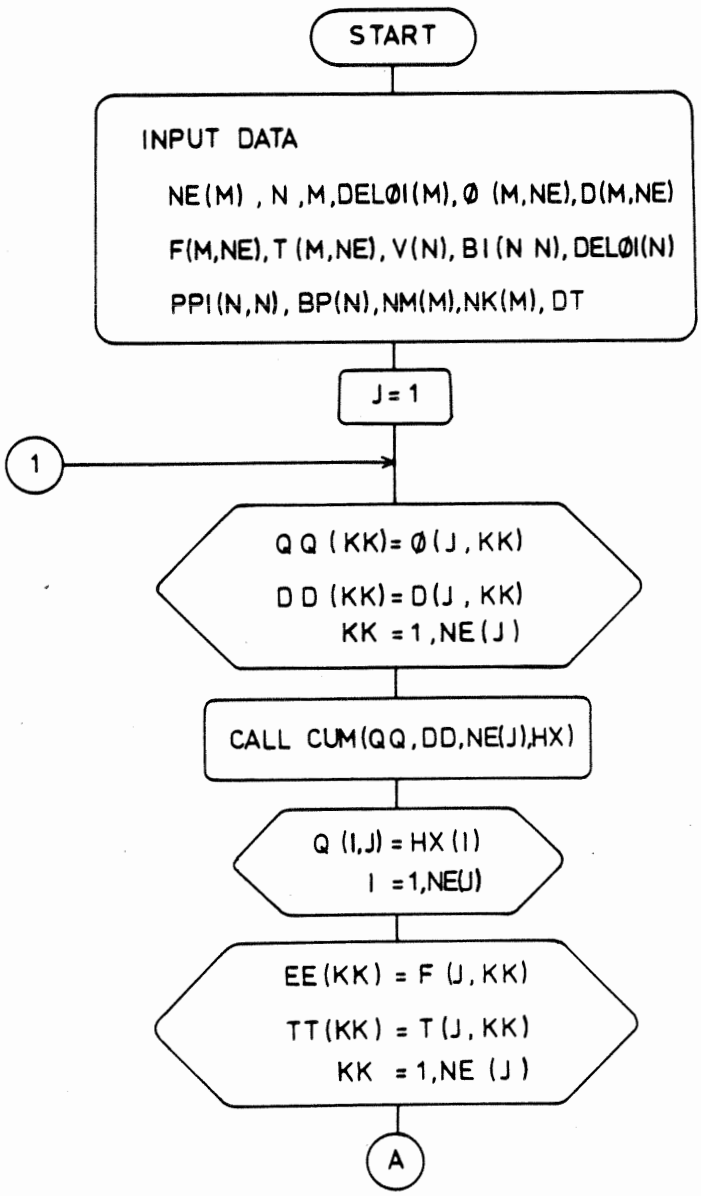

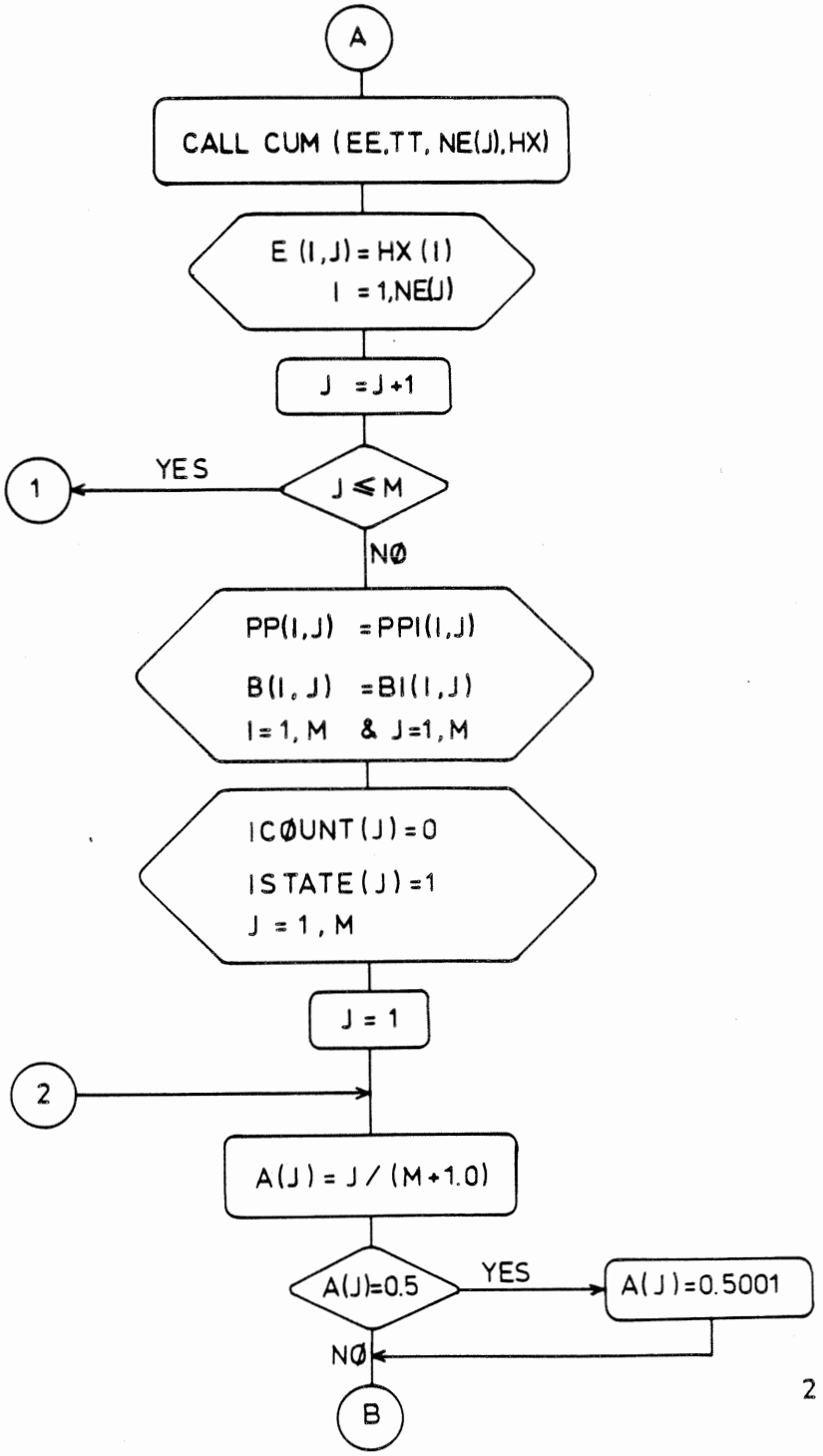
A
CALL CUM (EE,TT, NE(J),HX)
E (I,J) = HX (I)
I = 1,NE(J)
J = J+1
YES
1
J ≤ M
NØ
PP(I,J) = PPI(I,J)
B(I, J) = BI(I,J)
I = 1, M & J=1, M
ICØUNT(J) = 0
ISTATE(J) = 1
J = 1, M
J = 1
2
A(J) = J / (M+1.0)
A(J)=0.5
YES
A(J)=0.5001
NØ
B

2 of 18

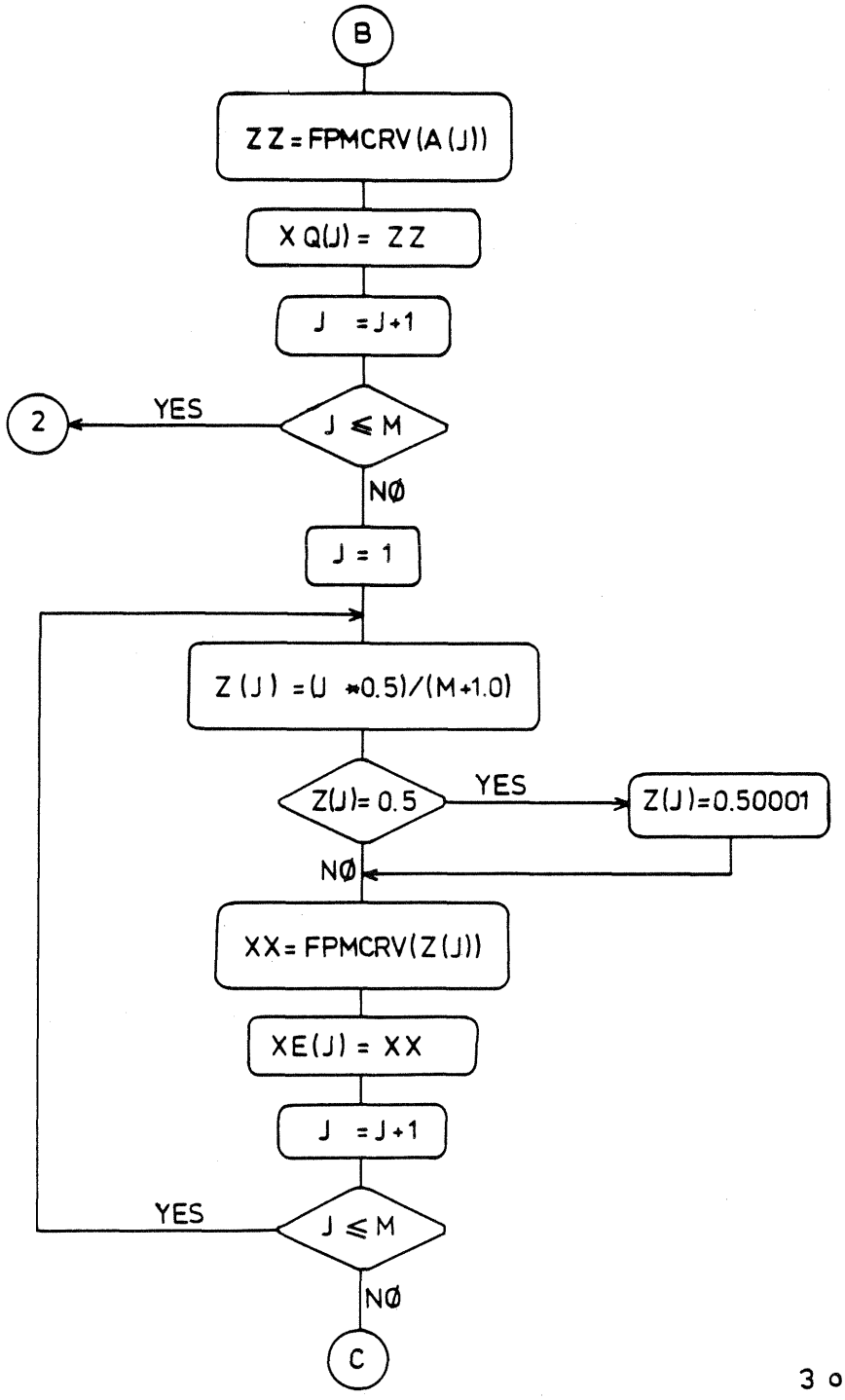
B
ZZ = FPMCRV (A (J))
X Q(J) = ZZ
J = J+1
J ≤ M
YES
2
NØ
J = 1
Z (J) = (J *0.5)/(M+1.0)
Z(J)= 0.5
YES
Z(J)=0.50001
NØ
XX= FPMCRV(Z(J))
XE(J) = XX
J = J+1
J ≤ M
YES
NØ
C

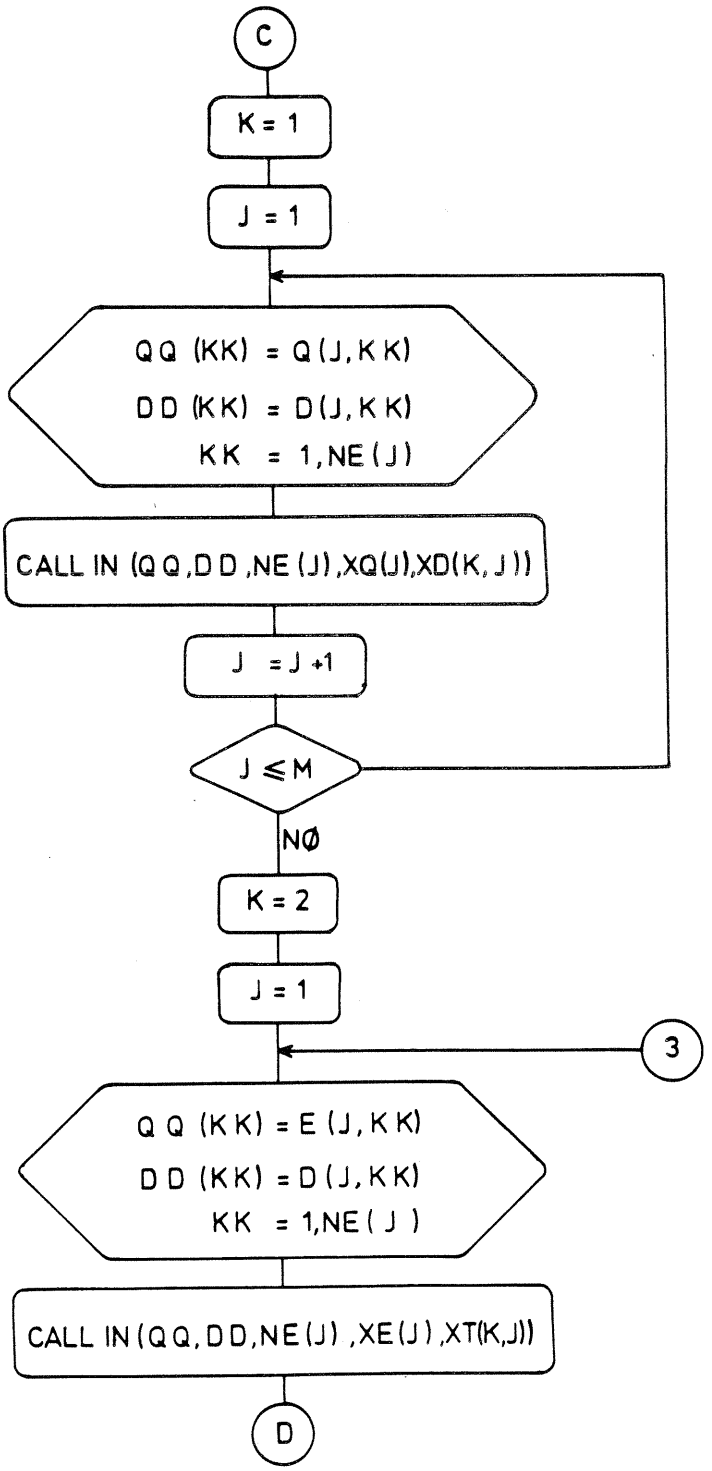
C
K = 1
J = 1
QQ (KK) = Q(J,KK)
DD (KK) = D(J,KK)
KK = 1,NE(J)
CALL IN (QQ,DD,NE(J),XQ(J),XD(K,J))
J = J +1
J ≤ M
NØ
K = 2
J = 1
3
QQ (KK) = E(J,KK)
DD (KK) = D(J,KK)
KK = 1,NE(J)
CALL IN (QQ,DD,NE(J),XE(J),XT(K,J))
D

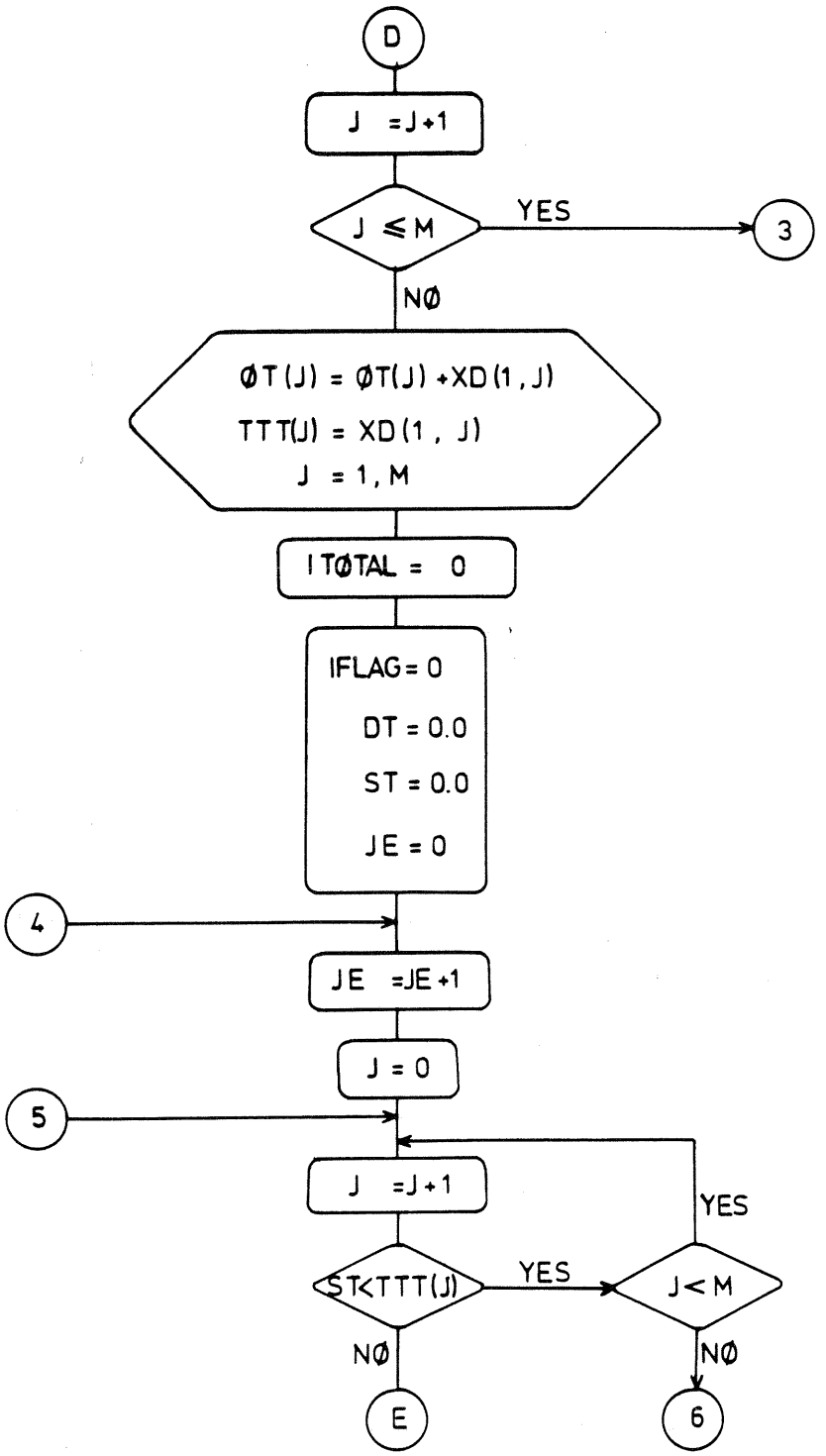
D
J =J+1
J ≤ M
YES
3
NØ
ØT(J) = ØT(J) +XD(1,J)
TTT(J) = XD(1, J)
J = 1, M
ITØTAL = 0
IFLAG = 0
DT = 0.0
ST = 0.0
JE = 0
4
JE =JE+1
J = 0
5
J =J+1
YES
ST<TTT(J)
YES
J < M
NØ
NØ
E
6

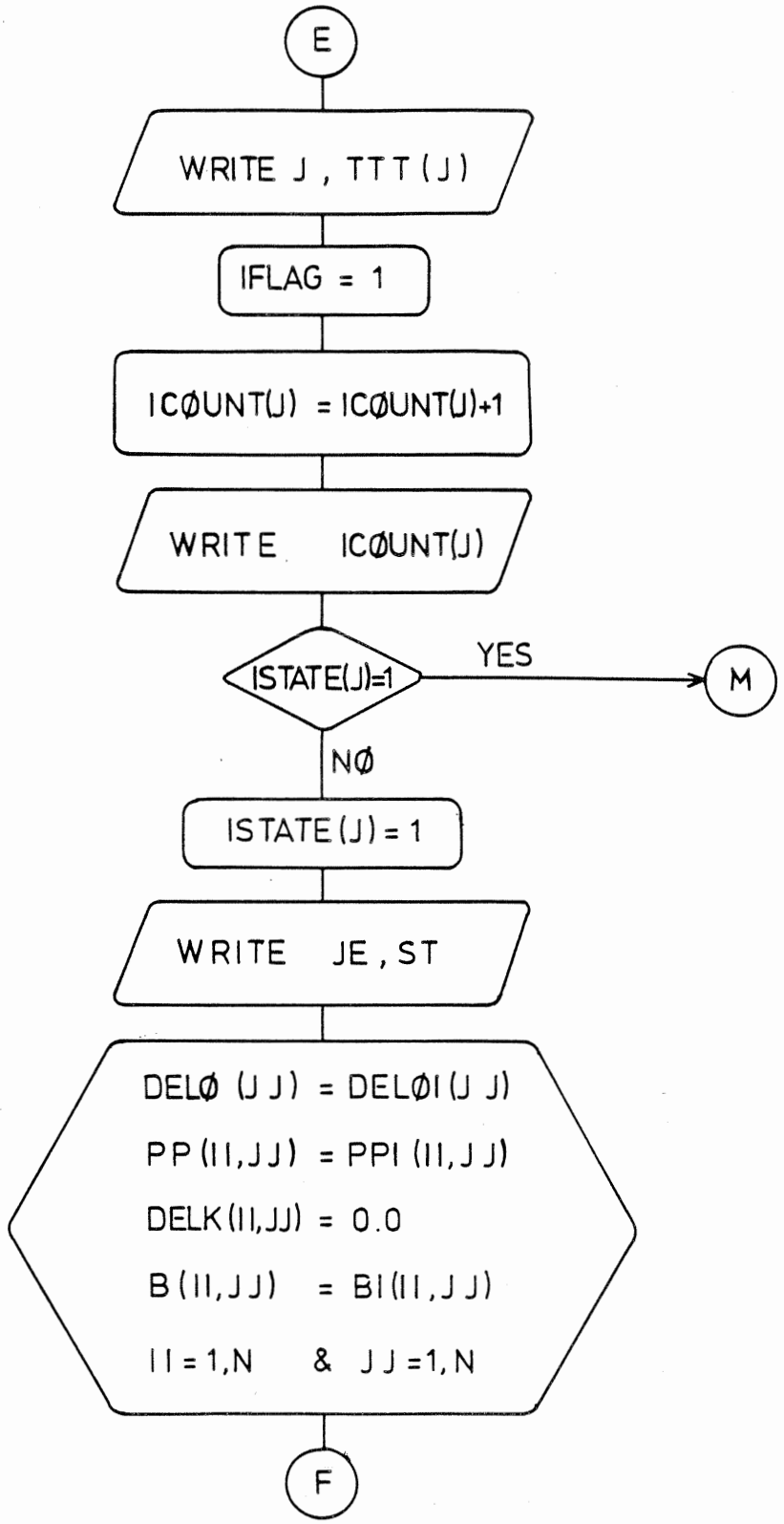
E
WRITE J , TTT (J)
IFLAG = 1
ICØUNT(J) = ICØUNT(J)+1
WRITE ICØUNT(J)
ISTATE(J)=1
YES
M
NØ
ISTATE (J) = 1
WRITE JE , ST
DELØ (J J) = DELØI (J J)
PP (II,JJ) = PPI (II,J J)
DELK(II,JJ) = 0.0
B (II,J J) = BI(II,J J)
II = 1,N & J J =1, N
F

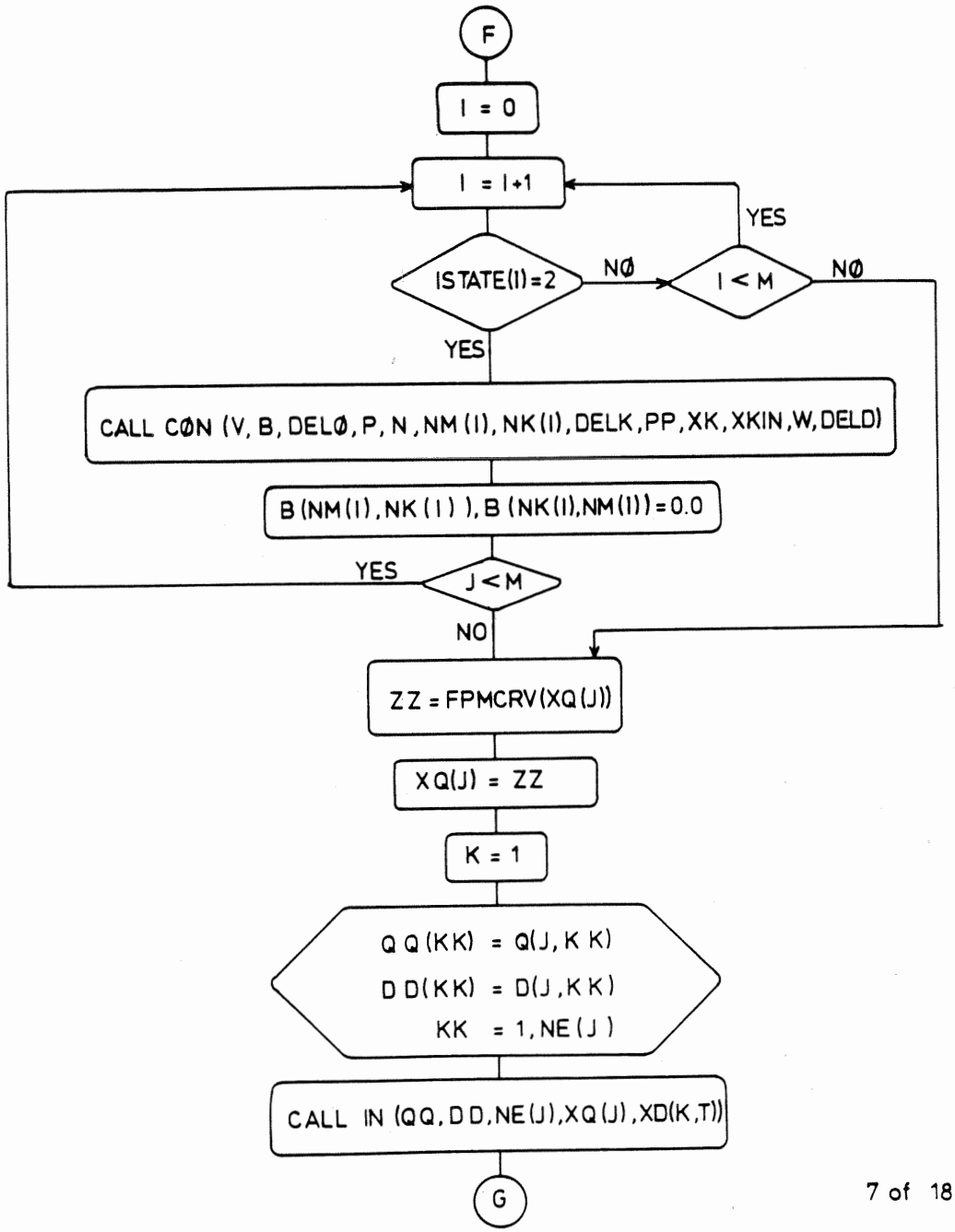
F
I = 0
I = I+1
YES
ISTATE(I)=2
NØ
I < M
NØ
YES
CALL CØN (V, B, DELØ, P, N, NM (I), NK(I), DELK, PP, XK, XKIN, W, DELD)
B (NM(I), NK (I)), B (NK(I), NM(I)) = 0.0
YES
J < M
NO
ZZ = FPMCRV(XQ(J))
XQ(J) = ZZ
K = 1
Q Q (KK) = Q(J, K K)
D D(KK) = D(J, K K)
KK = 1, NE (J)
CALL IN (QQ, D D, NE(J), XQ (J), XD(K, T))
G

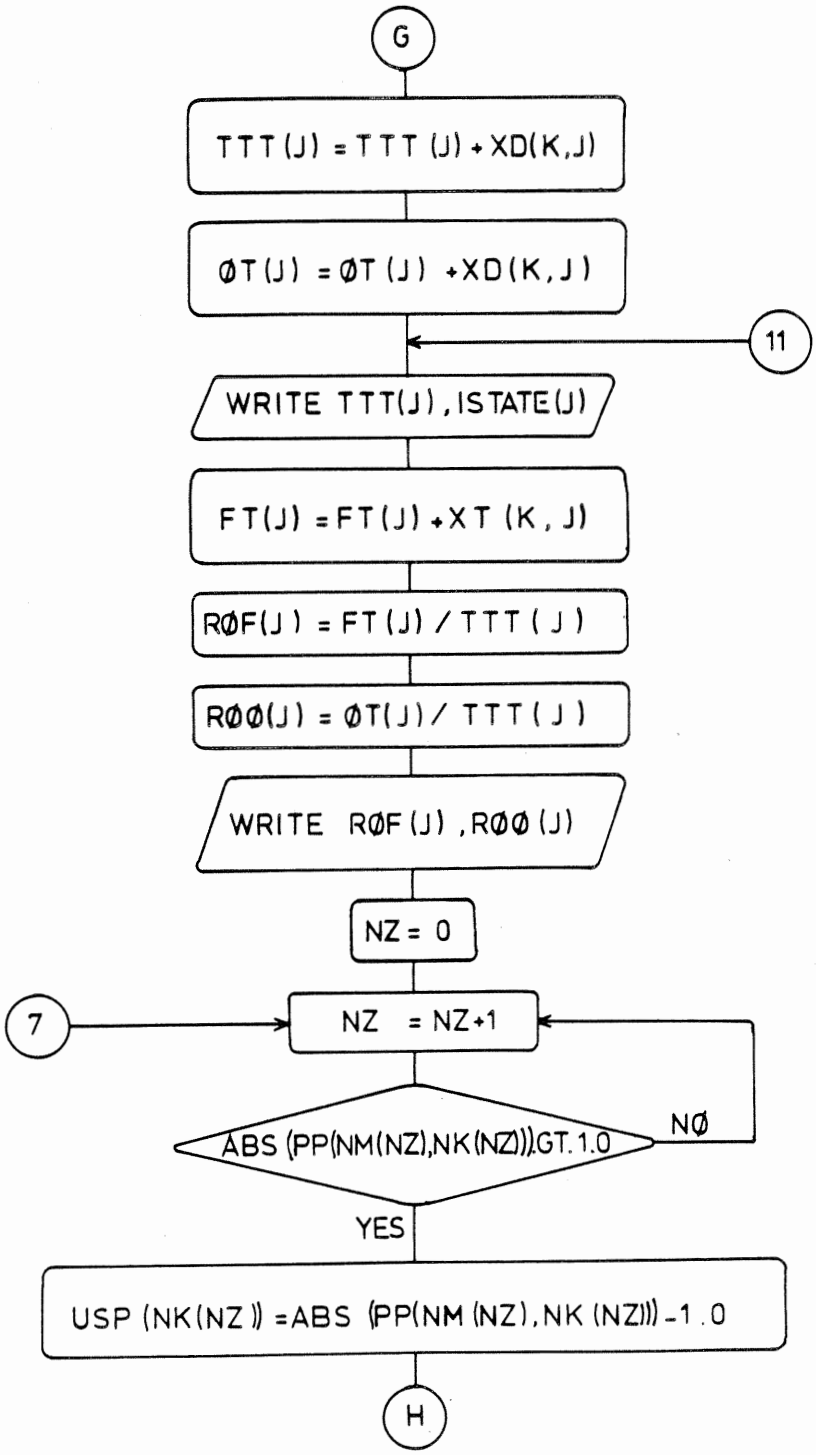
G
TTT(J) = TTT (J) + XD(K,J)
ØT(J) = ØT (J) + XD(K, J)
11
WRITE TTT(J), ISTATE(J)
FT(J) = FT(J) + XT (K, J)
RØF(J) = FT (J) / TTT (J)
RØØ(J) = ØT(J) / TTT (J)
WRITE RØF (J) , RØØ (J)
NZ = 0
7
NZ = NZ+1
ABS (PP(NM(NZ),NK(NZ))).GT. 1.0
NØ
YES
USP (NK(NZ)) = ABS (PP(NM (NZ), NK (NZ))) - 1 . 0
H

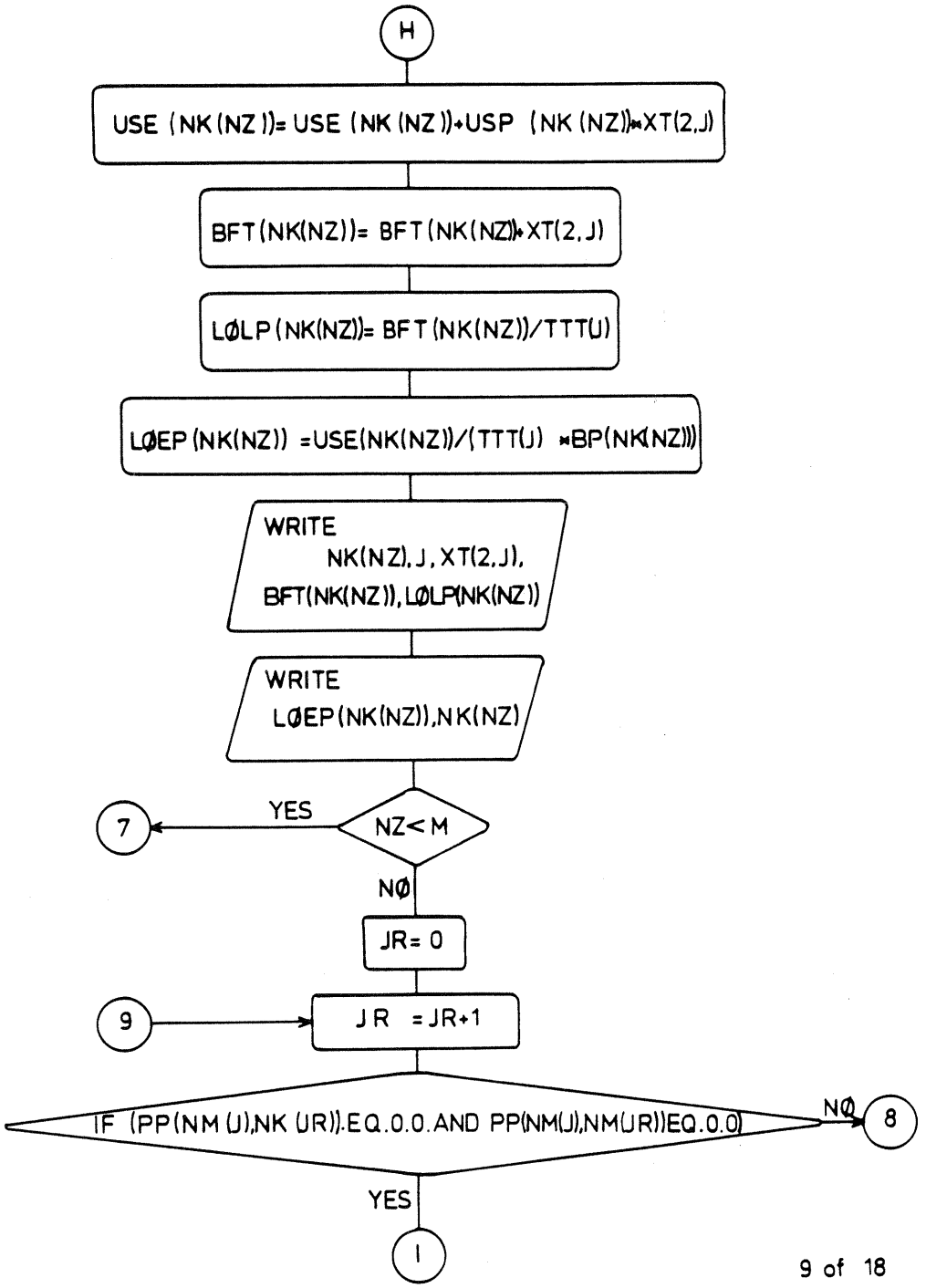
H
USE (NK(NZ))= USE (NK(NZ))+USP (NK(NZ))*XT(2,J)
BFT(NK(NZ))= BFT(NK(NZ))+XT(2,J)
LØLP(NK(NZ))= BFT(NK(NZ))/TTT(J)
LØEP(NK(NZ)) =USE(NK(NZ))/(TTT(J) *BP(NK(NZ)))
WRITE
NK(NZ),J,XT(2,J),
BFT(NK(NZ)),LØLP(NK(NZ))
WRITE
LØEP(NK(NZ)),NK(NZ)
NZ< M
YES
7
NØ
JR= 0
9
JR =JR+1
IF (PP(NM(J),NK(JR)).EQ.0.0.AND PP(NM(J),NM(JR))EQ.0.0)
NØ
8
YES
1

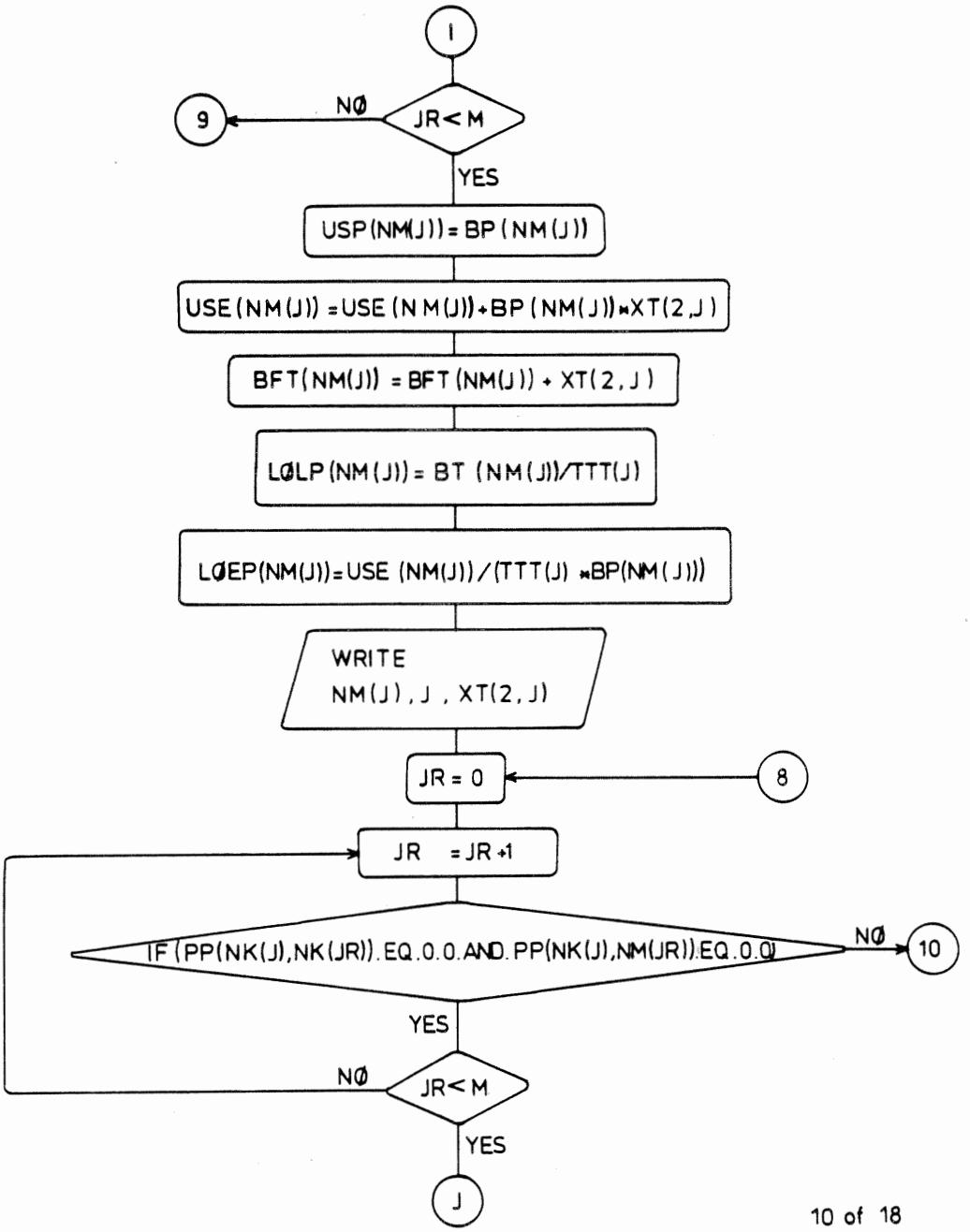
I
JR < M
NØ
9
YES
USP(NM(J)) = BP(NM(J))
USE(NM(J)) = USE(NM(J)) + BP(NM(J)) * XT(2,J)
BFT(NM(J)) = BFT(NM(J)) + XT(2,J)
LØLP(NM(J)) = BT(NM(J))/TTT(J)
LØEP(NM(J)) = USE(NM(J))/(TTT(J) * BP(NM(J)))
WRITE
NM(J), J, XT(2,J)
JR = 0
8
JR = JR + 1
IF(PP(NK(J),NK(JR)).EQ.0.0.AND.PP(NK(J),NM(JR)).EQ.0.0)
NØ
10
YES
JR < M
NØ
YES
J

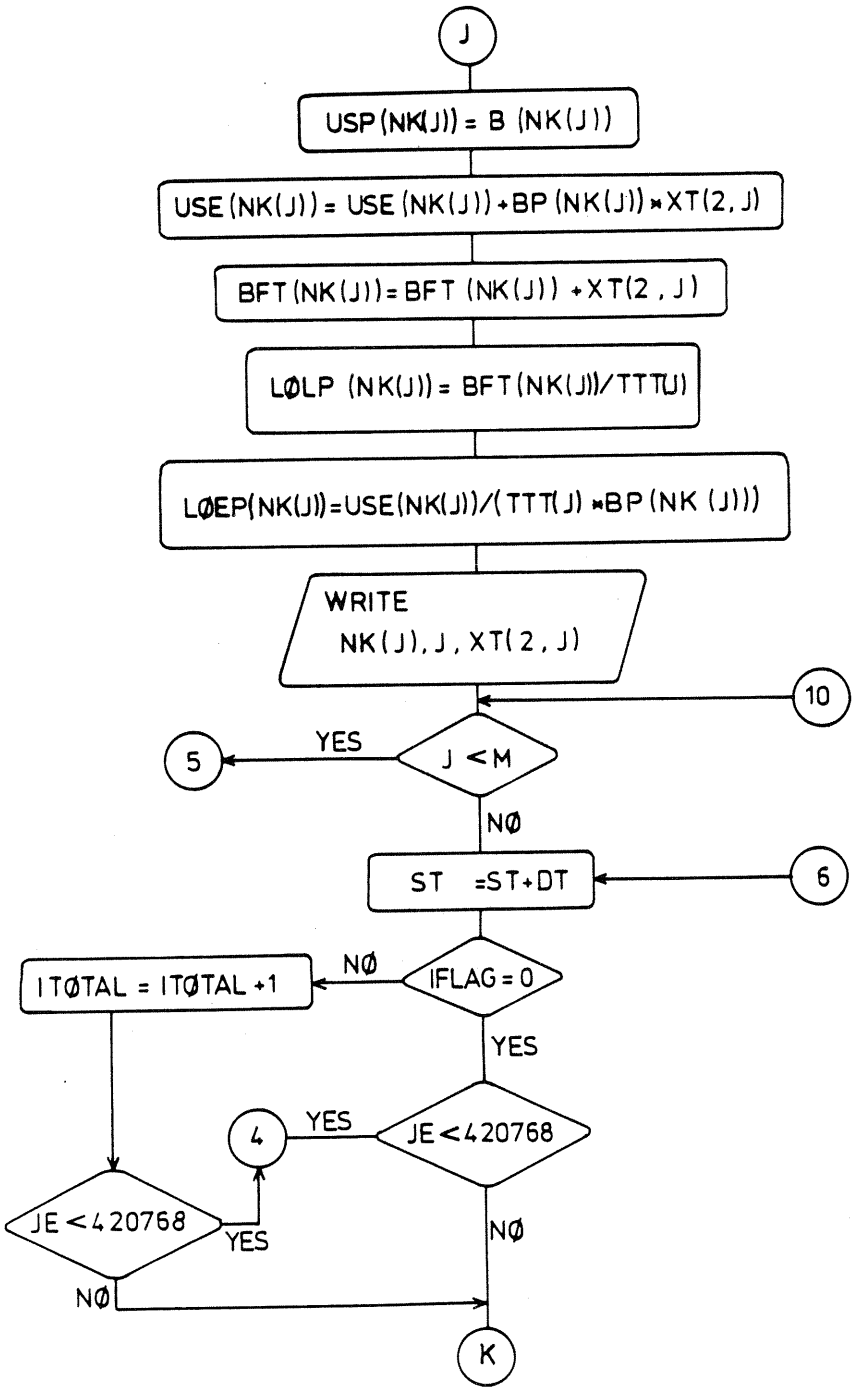
J
USP(NK(J)) = B (NK(J))
USE(NK(J)) = USE(NK(J)) + BP (NK(J)) * XT(2, J)
BFT(NK(J)) = BFT (NK(J)) + XT(2 , J)
LØLP (NK(J)) = BFT(NK(J))/TTT(J)
LØEP(NK(J)) = USE(NK(J))/(TTT(J) * BP (NK (J)))
WRITE
NK(J), J, XT(2, J)
10
J < M
YES
5
NØ
ST =ST+DT
6
IFLAG = 0
NØ
ITØTAL = ITØTAL +1
YES
JE < 420768
YES
4
JE < 420768
YES
NØ
NØ
K

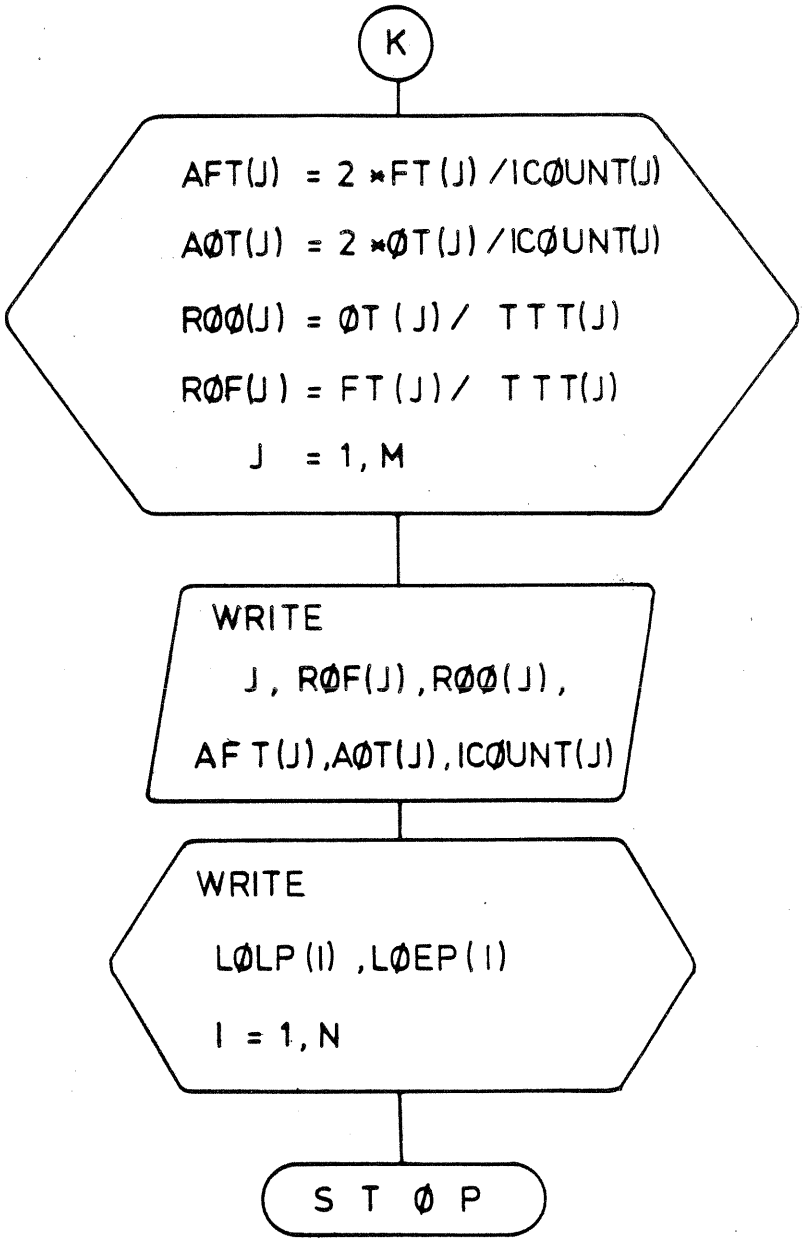
K
AFT(J) = 2 *FT(J) /ICØUNT(J)
AØT(J) = 2 *ØT(J) /ICØUNT(J)
RØØ(J) = ØT(J) / TTT(J)
RØF(J) = FT(J) / TTT(J)
J = 1, M
WRITE
J, RØF(J), RØØ(J),
AFT(J), AØT(J), ICØUNT(J)
WRITE
LØLP(I), LØEP(I)
I = 1, N
STØP

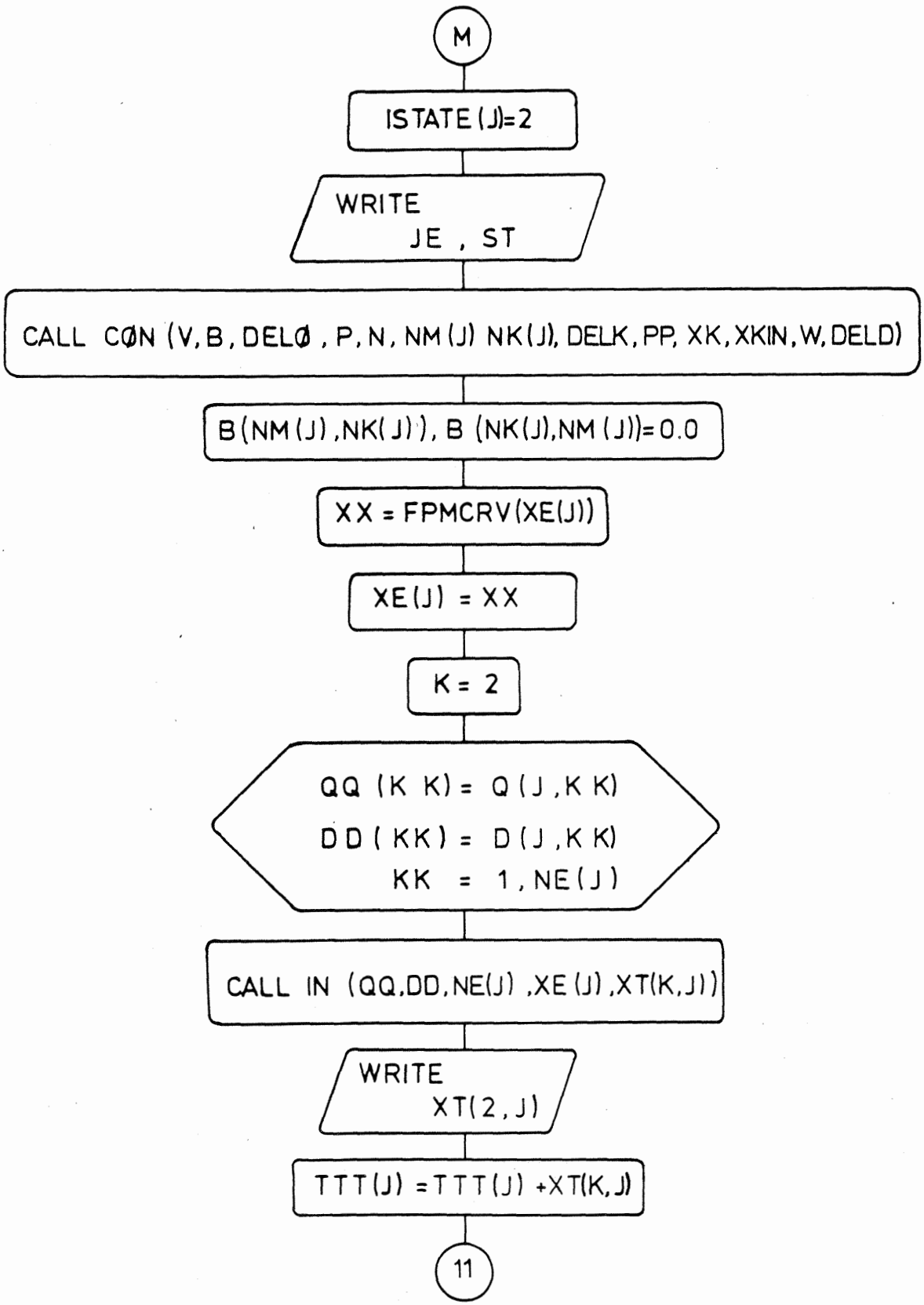
M
ISTATE (J)=2
WRITE
JE , ST
CALL CØN (V, B, DELØ , P, N, NM (J) NK(J), DELK, PP, XK, XKIN, W, DELD)
B (NM (J) ,NK(J)), B (NK(J),NM (J))= 0.0
XX = FPMCRV(XE(J))
XE(J) = XX
K = 2
QQ (K K) = Q (J ,K K)
DD (KK) = D (J ,K K)
KK = 1 , NE (J)
CALL IN (QQ,DD,NE(J) ,XE (J) ,XT(K,J))
WRITE
XT(2 , J)
TTT(J) =TTT(J) +XT(K,J)
11

SUBRØUTINE IN

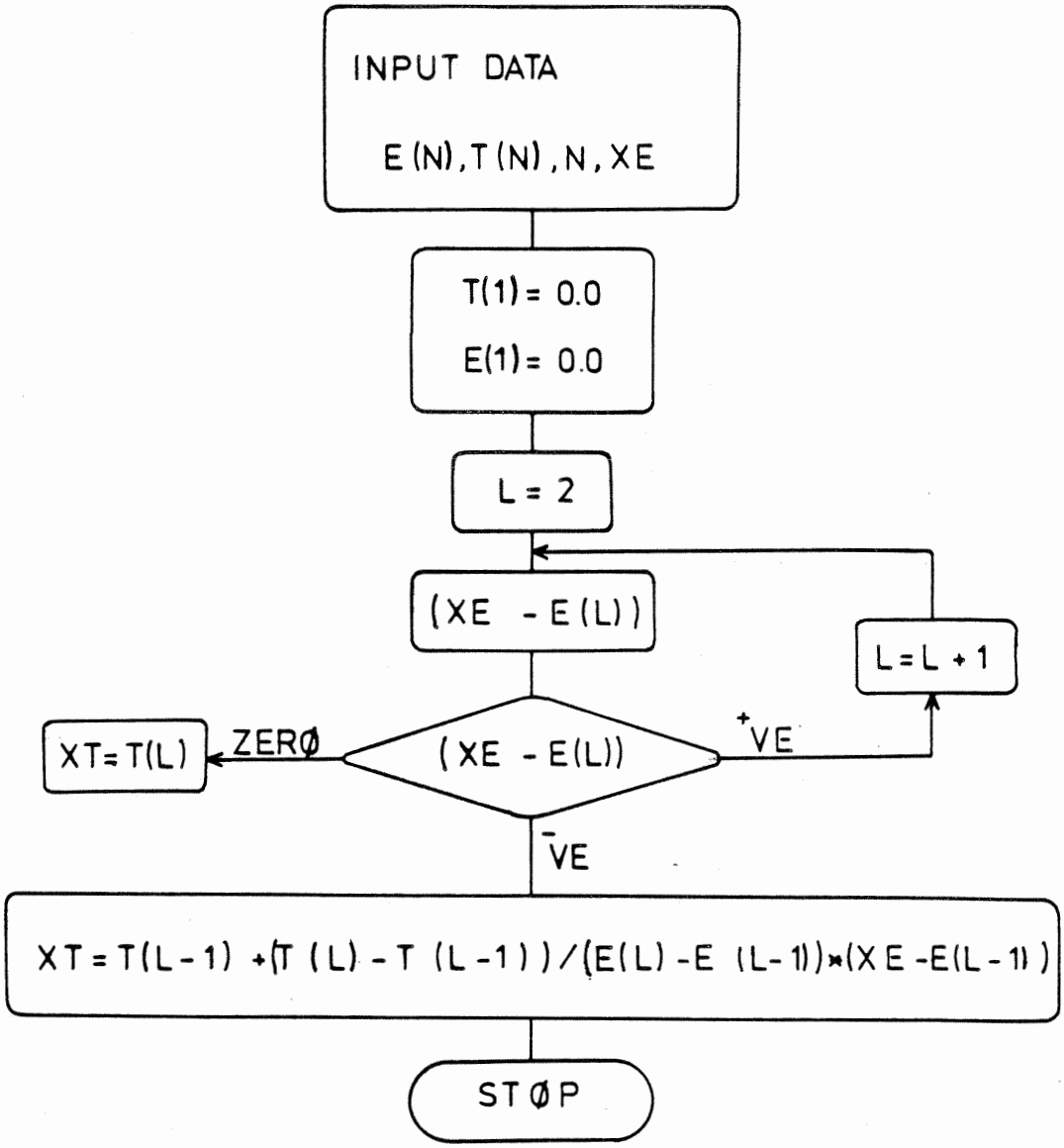

SUBRØUTINE CUM

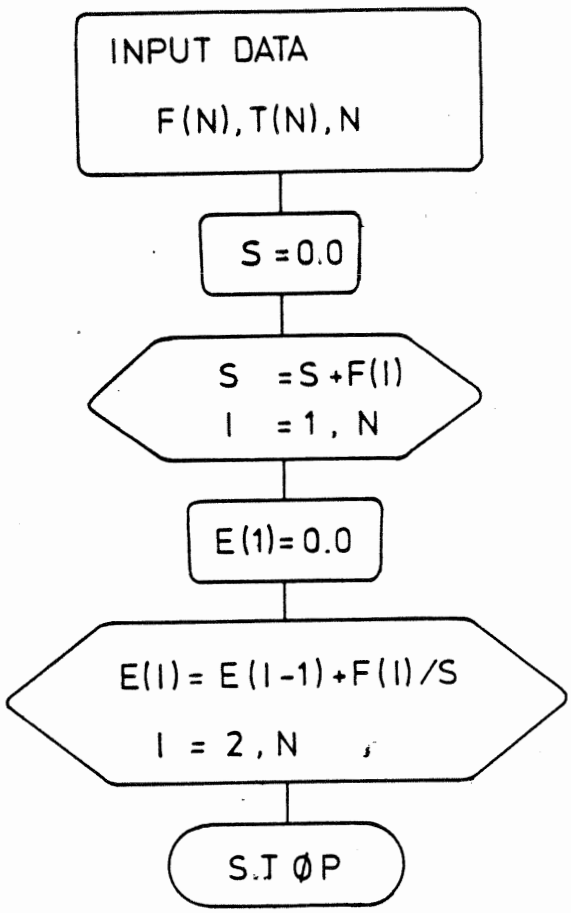

SUBRØUTINE CØN

D.C CØNTINGENCY

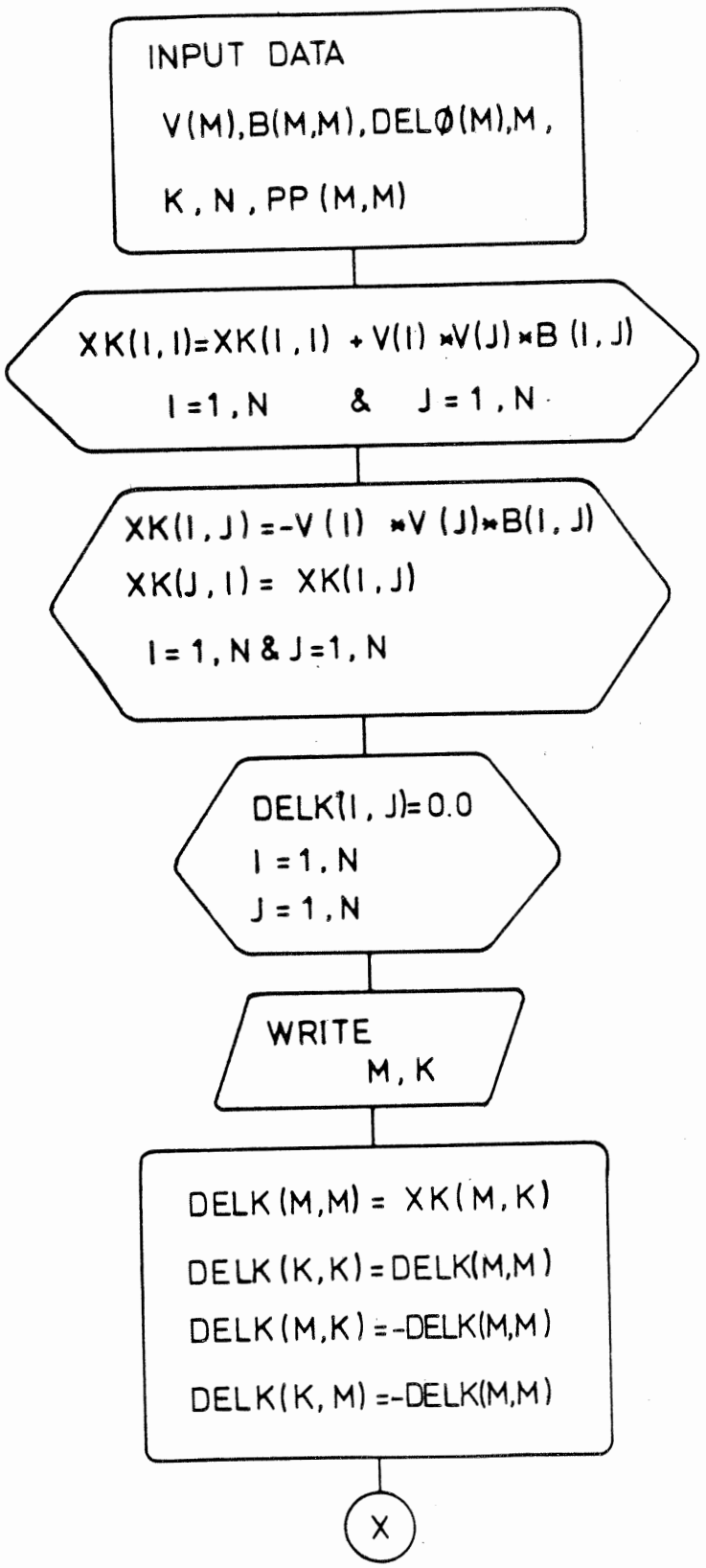

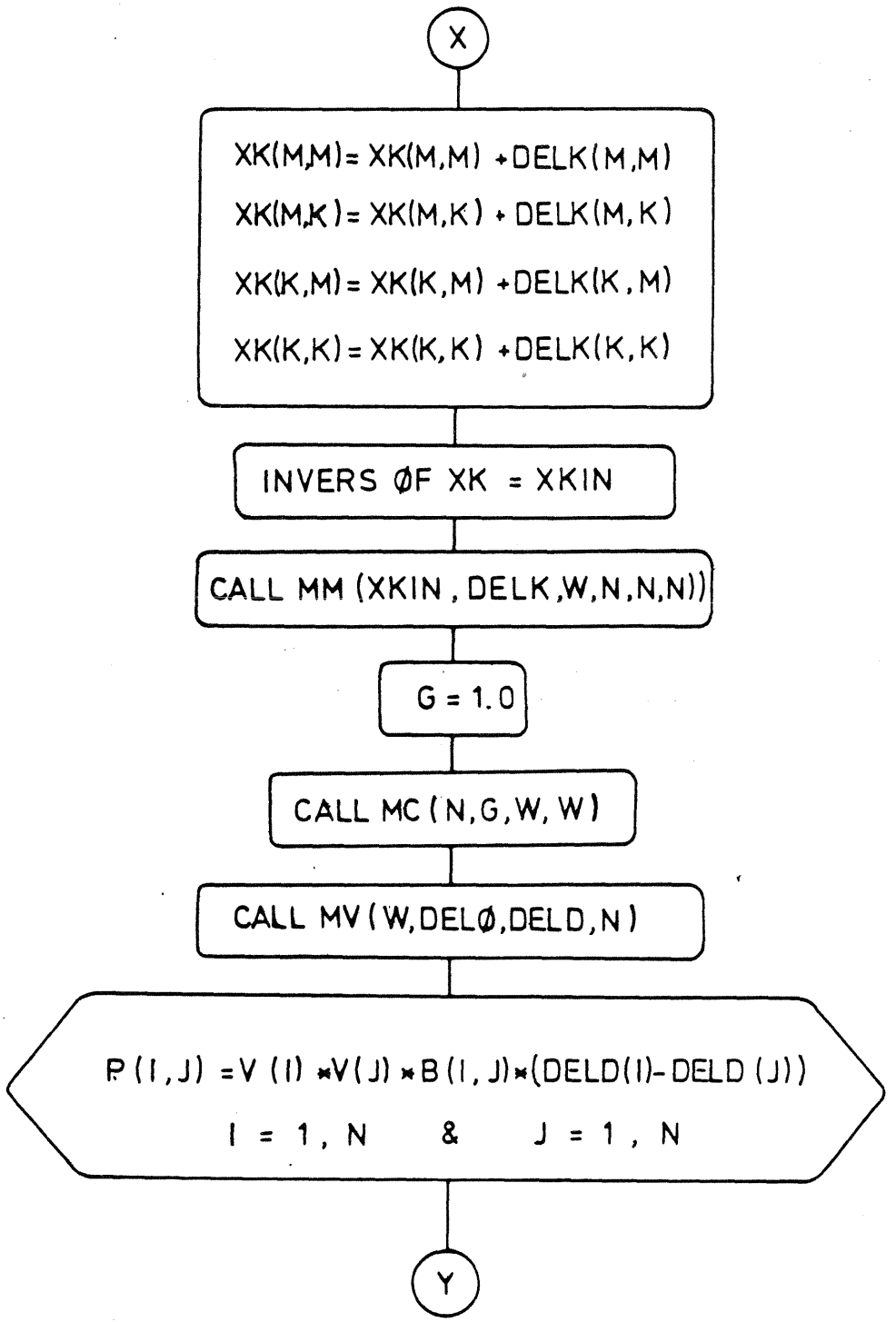
X
XK(M,M)= XK(M,M) +DELK(M,M)
XK(M,K)= XK(M,K) + DELK(M,K)
XK(K,M)= XK(K,M) +DELK(K,M)
XK(K,K)= XK(K,K) +DELK(K,K)
INVERS ØF XK = XKIN
CALL MM (XKIN, DELK,W,N,N,N))
G = 1.0
CALL MC (N,G,W,W)
CALL MV (W,DELØ,DELD,N)
P(I,J) =V (I) *V(J) *B(I,J)*(DELD(I)-DELD (J))
I = 1, N & J = 1, N
Y

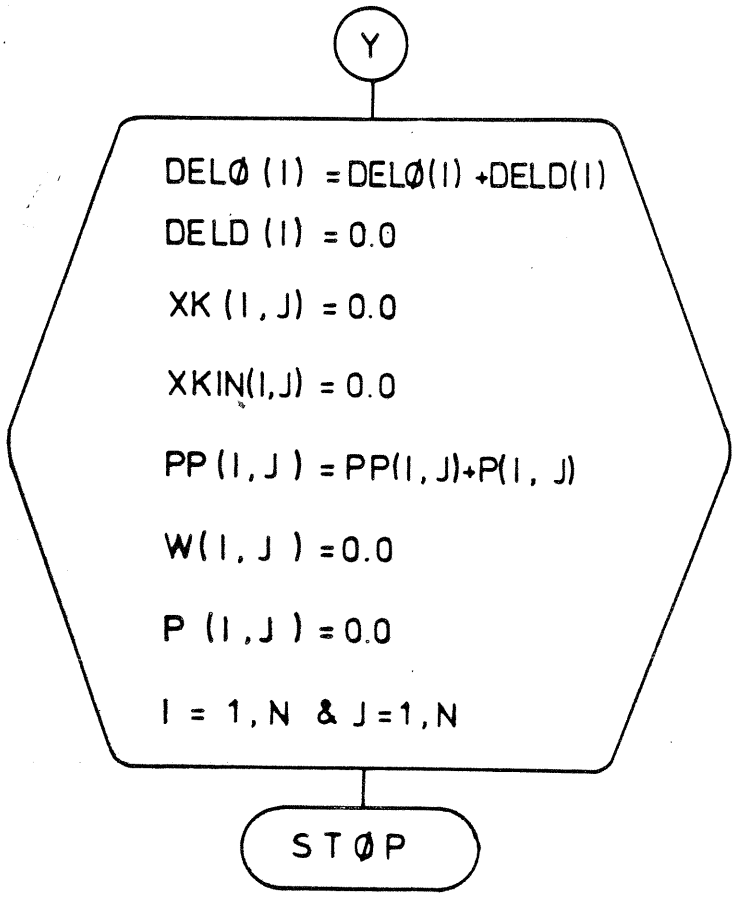
Y
DELØ (I) = DELØ(I) +DELD(I)
DELD (I) = 0.0
XK (I, J) = 0.0
XKIN(I,J) = 0.0
PP (I, J) = PP(I, J)+P(I, J)
W(I, J) = 0.0
P (I, J) = 0.0
I = 1, N & J = 1, N
STØP

REPORT. 3

APPLYING THE RAMPOT ALGORITHM TO THE 220 KV TRANSMISSION NETWORK

M. EL - SOBKI

Results of Appling the RAMPOT Algorithm to the 220 KV transmission Network

The 220 KV transmission Network of EGYPT exists in the northern part of the country. It has a total line lengths of about 1814 KM, 87.3% of which are used in double circuits (15 circuit), and 12.7% of which are used in single circuits (6 circuits). The conductor material used are mainly "ACO-400" or"ACSR-400" or " ACo-240".

The 220 KV transmission lines ties up eighteen bus-bar point, one of them is considered merely a generation bus, as it represents the bulk power transfered from the high Dam to the 22KV network. four points are generation bus-bars with local loads, two bus bars are loading points with local generation, and the rest of the bus-bars which are eleven points are merely loads.

The RAMPOT package was applied to the 220 KV network of EGYPT to regenerate the performance (operation/fail) cycle for the different transmition lines, hence computying the loss of energy probability and loss of energy probability (R.O.L.P. & L.O.E.P.) at all the 220 KV bus-bars.

The results are shown in the following tables:

A. In the case of actual loading conditions:

A.1 table 1. shows the Rate of Operation, and the Rate of failure for the different transmission lines. (the double circuit lines, are considered one element having the electricale equivalent constants of the parallel connection as these parallel connection as these parallel elements are identical from the loading point of view, physical constants, and weather conditions. This is done to increase the sample population data and to reduce the computer storage and time of computation).

A.2 Table 2. shows the average operation and failure times, and the number of state reversals during the considered period for the different elements which is about 4 years.

A.3. Table 3. shows the loss of load probability, and the loss of energy probability at all the 220 KV bus bars.

B. In the case of forecasted loading conditions; (Double Loading)
tables 4,5 & 6 shows the same reliability indicies indicated above under double loading conditions.

It should be noted that the high reliability indicies is due to using the forced outage historical data only

MAP OF 220 KV NETWORK

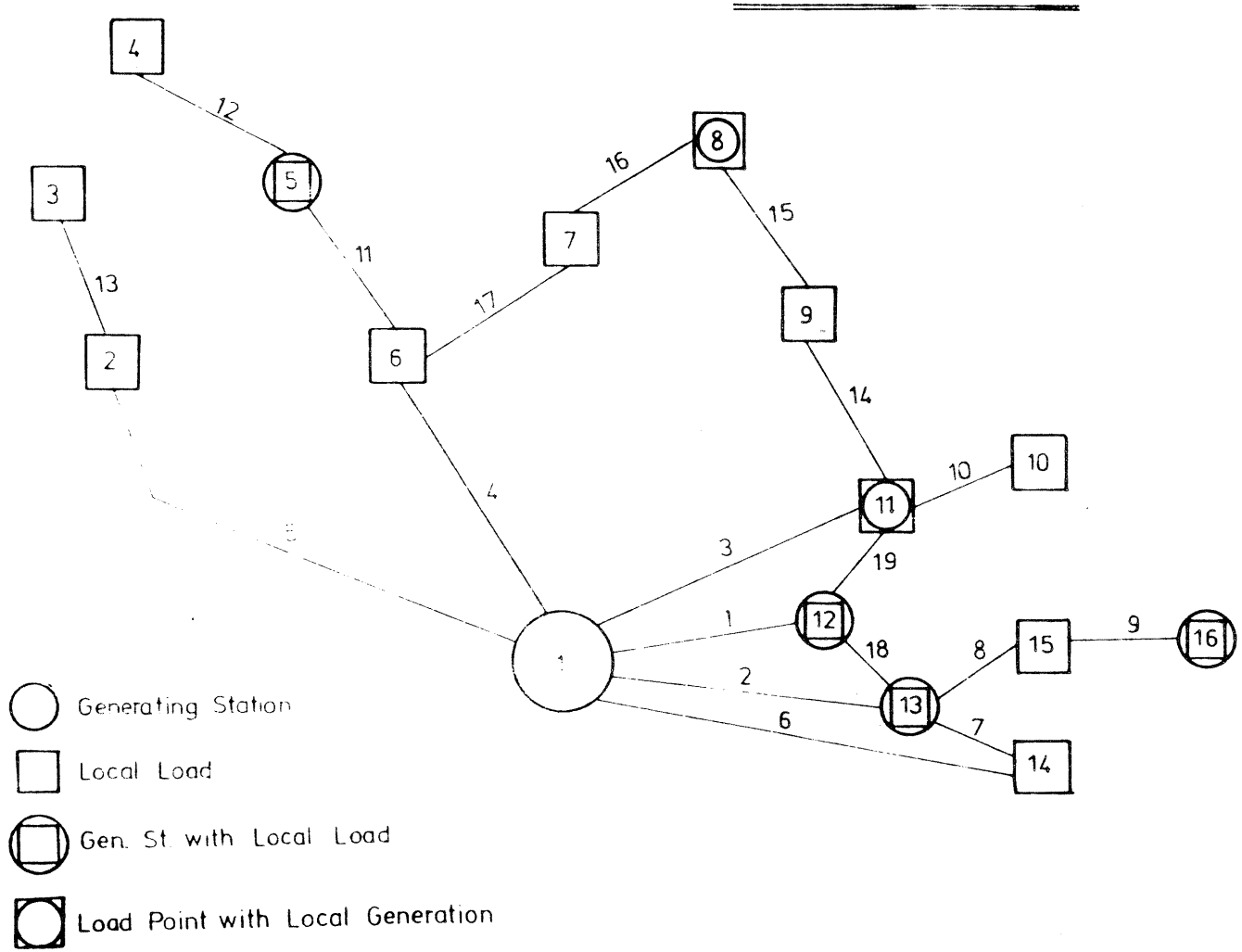

Table 1

Element number	Operation Rate	Failure Rate
1	0.999996	0.4×10^{-5}
2	0.988586	0.11414×10^{-1}
3	0.999538	0.462×10^{-3}
4	0.999986	0.14×10^{-4}
5	0.999996	0.4×10^{-5}
6	0.999945	0.55×10^{-4}
7	1.0	0.0
8	0.996619	0.3381×10^{-2}
9	0.999853	0.147×10^{-3}
10	0.994713	0.5287×10^{-2}
11	0.999501	0.499×10^{-3}
12	0.99945	0.55×10^{-3}
13	0.99947	0.53×10^{-3}
14	0.996801	0.3199×10^{-2}
15	0.999969	0.31×10^{-4}
16	0.999971	0.29×10^{-4}
17	0.999966	0.34×10^{-4}
18	1.0	0.0
19	0.998682	0.1318×10^{-2}

Table 2

Element number	Average Operation time hr	Average Failure time hr	number of state reversable
1	9299.14	0.04	10
2	3483.9	40.26	22
3	2713.5	1.25	28
4	6809.13	0.09	14
5	21510.4	0.086	4
6	9381.63	0.52	8
7	63115.0	0.0	2
8	2576.3	8.74	36
9	558.5	0.083	132
10	4057.2	21.566	18
11	4374.76	2.185	20
12	7676.5	4.224	10
13	11091.0	5.9	8
14	2129.8	6.835	38
15	6281.1	0.2	14
16	4476.85	0.128	16
17	4849.7	0.166	16
18	70128.0	0.0	0
19	3366.0234	4.442	26

Talbe 3

Bus-Bar Number	Loss of Load Probability	Loss of energy Probability
1	0.0	0.0
2	0.0	0.0
3	0.00105	0.00105
4	0.00065	0.00065
5	0.0	0.0
6	0.0	0.0
7	0.0	0.0
8	0.0	0.0
9	0.0	0.0
10	0.00615	0.00615
11	0.0	0.0
12	0.0	0.0
13	0.0	0.0
14	0.0	0.0
15	0.0	0.0
16	0.00015	0.00015

Table 4

Element Number	Rate of Operation	Rate of Failure
1	0.999996	0.4×10^{-5}
2	0.988586	0.11414×10^{-1}
3	0.999538	0.462×10^{-3}
4	0.999976	0.14×10^{-4}
5	0.999996	0.4×10^{-5}
6	0.999945	0.55×10^{-4}
7	1.0	0.0
8	0.996619	0.3381×10^{-2}
9	0.999853	0.147×10^{-3}
10	0.994713	0.5287×10^{-2}
11	0.999501	0.499×10^{-3}
12	0.999450	0.55×10^{-3}
13	0.999470	0.53×10^{-3}
14	0.996801	0.3199×10^{-2}
15	0.999969	0.31×10^{-4}
16	0.99997	0.3×10^{-4}
17	0.999966	0.34×10^{-4}
18	1.0	0.0
19	0.998682	0.1318×10^{-2}

Table 5

Element Number	Average Operation time hr	Average Failure time hr	Number of state reversals
1	9299.145	0.0407	10
2	3483.9	40.226	22
3	2713.5	1.254	28
4	6809.13	0.092	14
5	21510.4	0.086	4
6	9381.63	0.517	8
7	63115.01	0.0	2
8	2576.3	8.73	36
9	558.44	0.082	132
10	4057.23	21.566	18
11	4374.76	2.185	20
12	7676.54	4.224	10
13	11091.05	5.885	8
14	2129.78	6.83	38
15	6281.1	0.194	14
16	4476.85	0.128	16
17	4849.7	0.165	16
18	35064.0	0.0	0
19	3366.0	4.442	26

Table 6

Bus Number	L.O.I.P.	L.O.E.P
1	0.0	0.0
2	0.01326	0.0001
3	0.00105	0.00105
4	0.00065	0.00065
5	0.0	0.0
6	0.0133	0.00018
7	0.0008	0.00001
8	0.0	0.0
9	0.0	0.0
10	0.00615	0.00615
11	0.00918	0.00039
12	0.0	0.0
13	0.0	0.0
14	0.0	0.0
15	0.0	0.0
16	0.00015	0.00015

LONG TERM INVESTMENT PLANNING OF THE EGYPTIAN ELECTRIC POWER SYSTEM

SECTION III

POWER SYSTEM RELIABILITY ASSESSMENT
SUBSTATION RELIABILITY

INTRODUCTION

Over the past two decades electric power in Egypt has witnessed outstanding advances in both generation and transmission of power. From a total of less than a 1000 MW in the fifties, generation power rose to over 4000 MW by the late seventies. Transmission voltages have gone up from the 66 kV level to 500 kV level with 132 kV and 220 kV in between. With the advent of the high dam power and the elevated transmission voltages the need for interconnecting the different isolated power grids was felt. As a result, the unified electric power system was created.

The capability of such a unified power complex with its generation, transmission and substation components to provide uninterrupted power service must be carefully assessed. This type of assessment is customarily known as reliability evaluation.

This study presents a contribution to this field of endeavour. Attention is focused on the reliability of the last of the above three system components, namely, substations.

Reliability of Electric Power Systems

Electric energy is produced at a number of locations and is consumed at several points. One measure for the quality of the electric power system is its ability to transmit the energy from wherever it is produced to consumers and maintain their service. This measure of quality is the system reliability which is the resultant of the reliabilities of the many elements constituting the complex system.

Customarily, the study of the reliability of a complex electric power system is divided into separate, but related, studies of each of the following:

i. Generation systems
ii. Transmission networks
iii. Distribution systems
iv. Substations
v. Interconnected system, if any

This study is primarily concerned with substation reliability. The term substation here refers to both transformer and switching stations.

General Reliability Planning

One of the really difficult problems facing those responsible for planning of electrical power supply systems is that of deciding how they are justified in increasing the investment on their properties to improve service reliability. In general, there are three broad aspects of service reliability.

i) The first is to know thoroughly the "present quality" of one's service and just who is harmed by the present outages, and how much.
ii) The second aspect is a knowledge of the methods at hand to improve service, as well as the cost of these remedies.
iii) The third and the most important is the exercise of judgment as to where and when expenditures should be made to increase reliability and the extent of those expenditures.

To evaluate the system reliability, the system planning engineer should consider the following:

1. Definition of system reliability
2. Reliability modelling and evaluation
3. Testing and data collection
4. Reliability evaluation for alternative designs

This sequence is not rigid and,in fact, many steps may have to be repeated in an iterative fashion.

Goal of Study:

This study describes the means of evaluating the reliability of a substation in transferring power from feeding points to customers.

The Markov process-based approach is chosen for the present study. A fully computer-oriented algorithm is prepared whereby a given configuration of an existing or a proposed substation may be assessed from reliability viewpoint in one run. The algorithm can, thus, be particularly attractive when optimizing the configuration of a prospective substation where numerous alternatives exist.

An attempt to lay grounds for an economically optimal design of substation is made. The trade-off between availability and capital cost is the objective of that problem.

Report No. 1

COMPUTERIZED SUBSTATION RELIABILITY EVALUATION

"SUBSCOM"

by

H. Anis and Abdel Ghany Youseff

COMPUTERIZED SUBSTATION RELIABILITY EVALUATION "SUBSCOM"

Dr. H. Anis

Eng. Abdel Ghany Youssef

The evaluation of substation reliability can be very tedious and time consuming. The need for a fast and efficient means of making such an evaluation is felt. This need becomes more evident when optimization of substation configuration is sought where numerous runs must be made to verify the validity of different proposed schemes.

This paper offers an algorithm based on Markov process modelling. The algorithm which is programmed to run on a digital computer and is named SUBSCOM receives the basic parameters of the substation and the proposed configuration and runs a full calculation of the substation availability.

Each substation component has the following reliability parameters:

- Average up time $T = \frac{1}{n} \sum_{i=1}^{n} tui$ [hour]

  tui being the series of um times

- Average down time $T_d = \frac{1}{m} \sum_{i=1}^{m} tdi$ [hour]

  tdi being the series of down time

- Failure rate $\lambda = \frac{1}{Tu}$ $[\text{hour}]^{-1}$

- Repair rate $\mu = \frac{1}{Td}$ $[\text{hour}]^{-1}$

In this case the operation of a system or element may be modelled by means of Markov Stochastic Processes (Markov process of the first grade).

The process is completely determined by matrix equation:

$$[P_i'(t)] = [Q_{ij}] \; [P_i(t)]$$

Having as a single solution

$$[P_i'(t)] = [P_i(o)] \; e^{-|Q_{ij}|\,t}$$

As

$P_i(t)$: The absolute probabilities in the moment t.

Q_{ij} : The transition probabilities of the process, at time t, from state i to state j.

In case of stationary process, for long range analysis when the absolute probabilities do not depend on time, the equation becomes:

$$[Q_{ij}] \; [P_1] = o \qquad \text{and} \sum P_i = 1$$

where

$[Q_{ij}]$ is named the Matrix of transition rate (TRM).

1. Major Steps

The formation of the transition Rate Matrix (TRM) is very difficult especially when the number of scheme elements is large as the number of possible states increases in turn. To overcome this problem, the following major steps are carried out:

1. Transferring the substation scheme into a matrix from (K_1) which describes the element-set relationship.
2. Calculating the equivalent failure and repair rates of each element by using component - element matrix (K_2) and the failure and repair rates of each component.
3. The determination of the possible states using mathematical formulae.
4. Classifying all possible states into groups and calculating the number of states in each group.

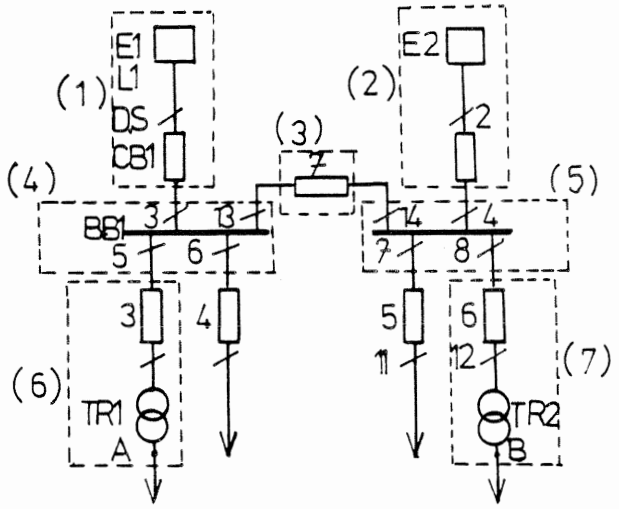

Fig (a-1) SINGLE LINE DIAGRAM OF A SUBSTATION

DS	Disconnecting Switch
CB	Circuit Breaker
BB	Bus Bar
TR	Transformer

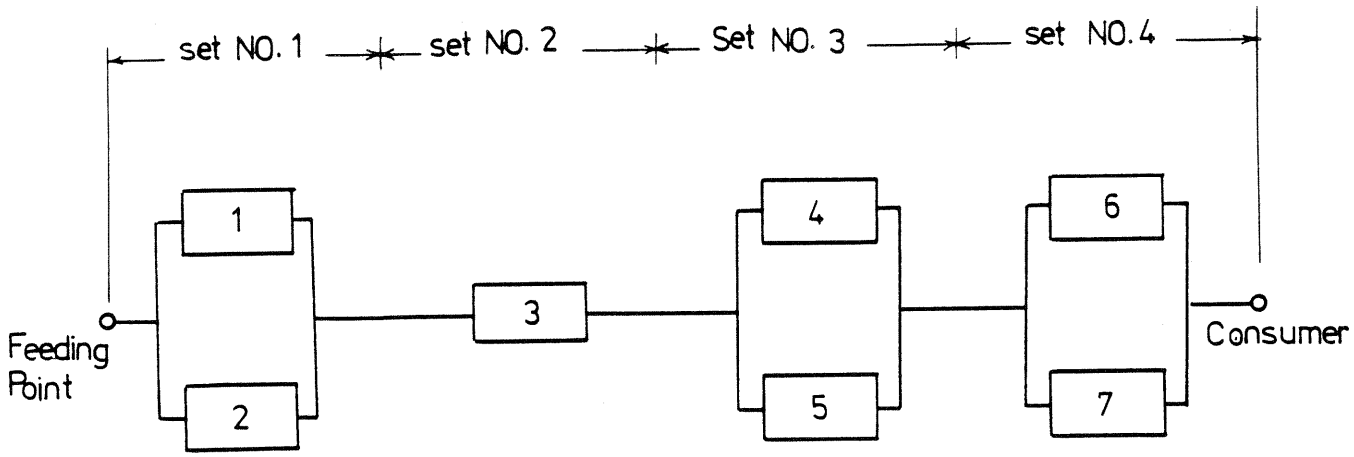

Fig. (a-2) SUBSTATION SCHEME

5. Forming the state matrix (K_3) which, in effect, replaces the tedious graphing of the state space diagram.

6. Formulation of the transition rate matrix (TRM).

7. Solving the Markov process-based matrix equation

$$[TRM] \quad [P] \quad = \quad 0$$

to determine the probabilities of the various states.

8. The evaluation of the times of operation and the times of service interruption.

In this paper the computer algorithm is described which implements the above steps. An example substation is used along the way to illustrate the algorithm.

1.1 Definitions

The following definitions are relevant to the olgarithm:

A Component: is the physical piece of equipment existing in the substation and whose rates of failure and repair must be known.

An Element: A group of components connected in series and will be treated as an integrated unit in the logical representation of the substation.

A Set: A group of elements connected in parallel, the whole scheme is a composition of series connected number of sets.

2. Element-Set Matrix K_1

The substation scheme illustrated in fig. (d-2), may be represented in matrix form K_1. The matrix is N x (L + 1) where

N: the number of elements (here, N = 7)

and

L: is the number of sets (here, L = 4)

the last column is reserved for the identification of alternative elements.

Set

	1	0	0	0	0
	1	0	0	0	0
	0	1	0	0	0
K1 = element	0	0	1	0	0
	0	0	1	0	0
	0	0	0	1	2
	0	0	0	1	2

Fig. (1) Element - Set Matrix

Set I in the matrix K_1 encompasses elements 1 and 2, and set II has only one element, number 3. The appearance in the last column of the digit 2 means that the corresponding elements are alternative. For example, elements 6 and 7 are alternative. Obviously, the number of 2'S must be even and they appear in successive pairs. Fig.(1) shows typical layout of the matrix K_1 as it is produced by the computer.

3. Equipment-Element Matrix K_2

A second descriptive matrix is K_2 which outlines the contents of each element in the substation. The matrix is K x N where K is the number of different types of components and N is the number of elements. If K_2 (i, j) = n, then the jth element contains n component of the type i.

To calculate the equivalent repair and failure rates of the substation's scheme, the repair and failure rate of each component of the substation must be available. The numerical values of the failure and repair rates of each type of component are written in vectors form, each of size K, which are name L and M.

For example, the substation shown in fig. (a.1) has the K_2 matrix shown in fig.(2) whose computer listing version is shown in fig. (3). Fig. (2) also shows the contents of the failure and repair rate vectors L and M, respectively.

$K_2 =$

Element / Component	1	2	3	4	5	6	7	-1 (hours) Vector L	-1 (hours) Vector M
C.B	1	1	1			1	1	$0{,}532\text{-}10^{-4}$	0,02
D.S	1	1		4	4	1	1	$0{,}0214.10^{-4}$	0,05
B.B				1	1			$0{,}1164.10^{-4}$	0,06
TR						1	1	$0{,}04.10^{-4}$	0,0025
L1	1							$0{,}6.\ 10^{-4}$	0,1
L2		1						1.10^{-4}	0,1
SN_1	1							$0{,}05.10^{-4}$	0,01
SN_2		1						$0{,}1.10^{-4}$	0,02

Fig. (2) Equipment-Element Matrix with Failure and Repair Vectors Land M

Element

	1	1	1	0	0	1	1
	1	1	0	4	4	1	1
	0	0	0	1	1	0	0
K2 = Component	0	0	0	0	0	1	1
	1	0	0	0	0	0	0
	0	1	0	0	0	0	0
	1	0	0	0	0	0	0
	0	1	0	0	0	0	0

Fig. (3) Component - Element Matrix

As shown in the matrix K_2, the element No.1 has one circuit breaker, one disconnecting switch, one feeder and a system mode. In contrast, the element No.3 has four disconnecting switches and one bus bar. The equivalent failure and repair rates of each element can be calculated within the computer program by using the matrix K_2.

4. State Analysis

Next comes the evaluation of various states in which the system may exist. This will be followed by the means to determine the successfulness of each state.

4.1 Determination of Possible States

First the number of possible states is estimated. This is based on the assumption made in the foregoing chapter that no more than two elements may fail together, or, in general, no more than two events may occur, simultaneously.

The possible states of a scheme of n elements can be divided into the following collection $[M_i, i = 1,4]$:

(1) State where all elements are available (up), the number of states in this collection is obviously 1,

$$M_1 = 1 \qquad \ldots\ldots \qquad (1.1)$$

(2) States where only one element fails, at a time,

$$M_2 = n - a \qquad \ldots\ldots \qquad (1.2)$$

where

a: number of pairs of alternative elements. This is based on the understanding that all individual failures of alternative elements constitute but one state since one substitutes for the other.

(3) States where two elements fail together. The number of these states is M_3.

$$M_3 = (n-a-1) + (n-a-2) + \ldots + [n-(n-a-1) -a]$$

$$= (n-a-1) + (n-a-2) + \ldots + 1 \qquad \ldots \qquad (1.3)$$

$$= \sum_{i=1}^{n-a-1} (n-ai) \qquad = \frac{(n-a-1)\ (n-a)}{2} \qquad \ldots \qquad (1.4)$$

The first term in equation (1.3) gives the number of states in which element No.1 of the scheme of fig. (a.2) fails with other elements while no more than one element fails with it, the second term shows the number of states when the second element fails with each other element except element No.1, and so on.

(4) The last collection represents the number of states when the alternative elements of an alternative pair fail together,

$$M_4 = a \qquad \ldots \qquad (1.5)$$

The total number of possible state M is equal to the sum of all collections, M_1, M_2, M_3 and M_4.

Then

$$M = 1 + (n-a) + \frac{(n-a-1)\ (n-a)}{2} + a$$

$$= 1 + n + \frac{(n-a-1)\ (n-a)}{2} \qquad \ldots \qquad (1.6)$$

In the studied example of fig. (a.1)

$n = 7$ and $a = 1$

$$\therefore \quad M = 1 + 7 + \frac{(7-1-1)\ (7-1)}{2} = 23$$

4.2 Groups of Possible State

From programming view point it was found proper to classify possible states into groups as follows:

1. The first group consists of the states of single failures, while all the others are in an up state. To this group the all-up state is added. The size of this group is $B_1 = n - a + 1$.

2. The seocnd group contains the states where element No.1 fails together with one other element, at a time, while all the other elements remaining up.

   The size of this group is $B2 = n - a - 1$

3. The ith group contains the states where element No. (i-1) fails together with one of the other elements, at a time, and excluding elements No. 1, 2, ..., i-2.

   The size of this group is $B_i = n - a - i + 1$
   and so on until all double failures are covered without duplication.

Table (a) enumerates all possible states arranged in the manner used by the program.

5. Matrix of States (K_3)

The matrix of states K_3 is a step on the route to get the transition rate matrix (TRM) without having to plot the state space diagram. The steps for creating the matrix K_3 are as follows:

(1) Calculate the number of possible states by using equation (1.6).

(2) Determine the number of states in the first group as defined in section (4.2) by using equation $B_1 = n + a + 1$. The number of states B_1 includes the state in which all elements are up plus the states of single element failures.

No.	UP Elements	Down Elements	Group No.	No. of States in Group	Up-Down States
1	1, 2, 3, 4, 5, 6, 7	-			1
2	2, 3, 4, 5, 6, 7	1			1
3	1, 3, 4, 5, 6, 7	2			1
4	1, 2, 4, 5, 6, 7	3	1	7	0
5	1, 2, 3, 5, 6, 7	4			1
6	1, 2, 3, 4, 6, 7	5			1
7	1, 2, 3, 4, 5, (6U7)	6U7			
8	3, 4, 5, 6, 7	1,2			0
9	2, 4, 5, 6, 7	1,3			0
10	2, 3, 5, 6, 7	1,4	2	5	1
11	2, 3, 4, 6, 7	1,5			1
12	2, 3, 4, 5, (6U7)	1,(6U7)			1
13	1, 4, 5, 6, 7	2,3			0
14	1, 3, 5, 6, 7	2,4			1
15	1, 3, 4, 6, 7	2,5	3	4	1
16	1, 3, 4, 5, (6U7)	2,(6U7)			1
17	1, 2, 5, 6, 7	3,4			0
18	1, 2, 4, 6, 7	3,5	4	3	0
19	1, 2, 4, 5, (6U7)	3,(6U7)			0
20	1, 2, 3, 6, 7	4,5			0
21	1, 2, 3, 5, (6U7)	4,(6U7)	5	2	1
22	1, 2, 3, 4, (6U7)	5,(6U7)	6	1	1
23	1, 2, 3, 4, 5	6,7	7	1	0

Table (a) Possible States

K3 =

	1	2	3	4	5	6	7
1		2	3	4	5	6	7
2	2		8	9	10	11	12
3	3	8		13	14	15	16
4	4	9	13		17	18	19
5	5	10	14	17		20	21
6	6	11	15	18	20		22
7	7	12	16	19	21	22	23

μ_1
μ_2
μ_3
μ_4
μ_5
μ_7

λ_1	λ_2	λ_3	λ_4	λ_5	$2\lambda_7$

(Fig. (4) Matrix of states with repair and failure rate vectors

(3) Form the square matrix K_3 of dimension $B1 \times B_1$.

(4) Fill the upper right triangle of K_3 ($B_1 \times B_1$) matrix by state numbers beginning with K3 (1,2) = 2, i.e. state No.2 and so on as seen in fig. (4).

(5) The K_3 is made symmetric by making the left lower triangle similar to the right upper.

5.1 Alternative-Pair Effect

The numbering process goes beyond the upper right triangle to include a diagonal element if a state in which a pair of alternative elements fail together is encountered. All other diagonal entries are filled with zeros.

5.2 Repair and Failure Rate Vectors

A vector vv(B1) is set to contain the equivalent repair rates μi where μi is written in the $(i+1)^{th}$ entry of that vector. If the diagonal element (i, i) of K_3 is not zero indicating a state of alternative element failure then the $(i + 1)^{th}$ entry of vv is filled with $\mu i + 2$ to account for the equality of μi and $\mu i + 1$.

A vector VH (B1) is set to contain the equivalent failure rate λi where λi written in the $(i+1)^{th}$ entry of that vector. If the diagonal element (i, 1) of K3 is not zero indicating a state of alternative element failure then the $(i + 1)^{th}$ entry of VH is filled with 2 ($\lambda i+2$) to account for the equality of λi and $\lambda i+1$.

5.3 Application to Example

The matrix of states K3 of the example substation illustrated in fig. (a.1) and its scheme shown in fig. (a.2), can be created now in numerical form. The parameters of scheme are:

$n = 7$ and $a = 1$

D / Z	2 / 0	3 / 8	4 / 9	5 / 10	6 / 11	7 / 12	
3	8	0	13	14	15	16	.039340440
4	9	13	0	17	18	19	.020000000
5	10	14	17	0	20	21	.055312158
6	11	15	18	20	0	22	.055312158
7	12	16	19	21	22	23	.013791020

.000120340.000165340.000053200.000020200.000020200.000118680

Fig. (4.1) Computer Listing of Matrix K3

then

$$M = 1 + n + \frac{(n-a-1)\ (n-a)}{2} = 8 + 15 = 23$$

$$B1 = n-a+1 \quad = 7$$

The matrix K3 will be as shown in fig.(4) and whose computer listing version is shown in fig. (4.1).

Also shown in the computer listing of fig. (4.1) are the contents of the vector VV and VH. These values were computed according to the analysis of section (3) and using the data shown by the failure and repair rate vectors L and M of fig. (2).

5.4 Remarks on K_3

The matrix K3 is generally characterized by:

i. As the number of alternatives increase, the number of states decrease.

ii. The number of states in the first group (B1) decrease by the increase of the number of alternative elements and so does the size of K3.

iii. The diagonal elements are all -zero elements when there is no alternative elements.

iv. The entries K3 (1, 1) is always zero.

v. Matrix K3 has dimension of (B1 x B1). The number of elements in each of its two triangles is $\frac{B1^2 - B1}{2}$. The number of non zero element in the diagonal elements will be equal to the number of alternative elements a. The total number of states is

$$\frac{B1^2 - B1}{2} + a + 1$$

where, the last unity represents the first state in which all the elements are up.

6. Transition Rate Matrix (T.R.M.)

The matrix K3 will now be used to create the transition rate matrix TRM which will be later used to produce the ultimate state probabilities.

The foregoing formulations of K3, VH and VV have been made in such a way as to allow a direct creation of the TRM according to the following steps:

i. TRM (K3 (i, j) = VH(j)
for i = 1, B1 and j = 1, B1
i.e. the off-diagonal element of TRM on the ith column and K3 (i, j)th row contains the jth content of VH which is an equivalent failure rate.

ii. TRM (j, K_3 (i,j)) = VV(i)
for i = 1, B1 and j = 1, B1
i.e. the off-diagonal element of TRM on the jth row and K3(i,j)th column contains the ith content of VV which is an equivalent repair rate.

iii. The diagonal elements

TRM (i, i) i = 1, B1

are made to satisfy the constraint that

$$\sum_{i=1}^{B1} \text{TRM}(i, j) = 0 \qquad j = 1, B1$$

Based on the matrix K3 of fig. (4.1) and the vectors VH and VV of the same figure, the TRM matrix was computed and is displayed in fig. (5). Due to insufficient listing space each row of the TRM matrix occupies two printed lines.

It should be noted that the number of non-zero off-diagonal elements in either the lower or upper triangles of TRM is given by

$$S = (B1^2 - B1 + a) - (B1 - 1)$$
$$= B1^2 - 2B1 + a + 1 \quad \text{elements}$$

Having the diagonal elements all non zero, the total number of non zero elements of the matrix is, therefore

Fig (5) COMPUTER LISTING OF TRANSITION RATE MATRIX

$$NT = 2\,S + M$$

$$= 2B1^2 - 4B1 + 2a + 2 + M$$

where

M is the number of states

and B1 is given in section (4.2).

7. States Probabilities

The differential equation describing the Markov model is

$$\begin{bmatrix} P_1 \\ P_2 \\ \cdot \\ \cdot \\ \cdot \\ P_n \end{bmatrix} = [T.R.M.] \begin{bmatrix} P_1 \\ P_2 \\ \cdot \\ \cdot \\ \cdot \\ P_n \end{bmatrix} = 0 \qquad \ldots. \qquad (2)$$

That is

$$\begin{bmatrix} a_{11} & a_{12} & a_{13} \ldots\ldots\ldots & a_{1n} \\ a_{21} & a_{22} & a_{23} \ldots\ldots\ldots & a_{2n} \\ \cdot & & & \\ \cdot & & & \\ \cdot & & & \\ \cdot & & & \\ \cdot & & & \\ a_{n1} & a_{n2} & a_{n3} & a_{nn} \end{bmatrix} \begin{bmatrix} P_1 \\ P_2 \\ \\ \\ \\ \\ P_n \end{bmatrix} = 0$$

Then

$$a_{11}P_1 + a_{12}\,P2 + \ldots.. + P_{1n}\,P_n = 0$$

$$a_{21}P_1 + a_{22}\,P_2 + \ldots.. + a_{2n}\,P_n = 0$$

- -

- -

$$a_{n1}P_1 + a_{n2}\,P_2 + \ldots\ldots\ldots\ldots a_{nn}\,P_n = 0$$

Since the right hand side is a zero array, then the set of equations is redundant and use is made of the constraint

$$P_1 + P_2 + \ldots + P_n = 1 \qquad \ldots \qquad (3)$$

Dividing by P_n

Then

$$a_{11} \frac{P_1}{P_n} + a_{12} \frac{P_2}{P_n} + \ldots + a_{1n} = 0$$

$$a_{21} \frac{P_1}{P_n} + a_{22} \frac{P_2}{P_n} + \ldots + a_{2n} = 0$$

- -

- -

$$a_{n1} \frac{P_1}{P_n} + a_{n2} \frac{P_2}{P_n} + \ldots + a_{nn} = 0$$

Discarding the last equation constitutes a set of (n-1) simultaneous equation in xi (i = 1, n-1), where

$x_i = P_i/P_n$

$$a_{11} x_1 + a_{12} x_2 + \ldots + a_{1(n-1)} x_{(n-1)} = - a_{1n}$$

$$a_{21} x_1 + a_{22} x_2 + \ldots + a_{2(n-1)} x_{(n-1)} = - a_{2n}$$

- -

- -

$$a_{(n-1)\ 1} x_1 + a_{(n-1)\ 2} x_2 + \ldots + a_{(n-1)\ (n-1)} x_{n-1} = -a_{(n-1)\ n}$$

This set of simultaneous linear equations is solved by an ICL computer package subroutine (FPINDE (AA(1), IR, IN, D, EP.SI, AB(1). IM, IS, IW(1)) which uses the Gauss elimination principle. As the variables $x_i = P_1/P_n$ are obtained, then by equation (3)

$$\frac{P_1}{P_n} + \frac{P_2}{P_n} + \ldots \ldots + \frac{P_n}{P_n} = \frac{1}{P_n}$$

$$x_1 + x_2 + \ldots \ldots + x_n^{-1} = \frac{1}{P_n} - 1$$

```
J= 1      P(J)=.980181777
J= 2      P(J)=.003727435
J= 3      P(J)=.004119508
J= 4      P(J)=.002607284
J= 5      P(J)=.000357962
J= 6      P(J)=.000357962
J= 7      P(J)=.008435052
J= 8      P(J)=.000015666
J= 9      P(J)=.000009915
J=10      P(J)=.000001361
J=11      P(J)=.000001361
J=12      P(J)=.000032077
J=13      P(J)=.000010958
J=14      P(J)=.000001504
J=15      P(J)=.000001504
J=16      P(J)=.000035451
J=17      P(J)=.000000952
J=18      P(J)=.000000952
J=19      P(J)=.000022437
J=20      P(J)=.000000131
J=21      P(J)=.000003080
J=22      P(J)=.000003080
J=23      P(J)=.000072589
     PSUCC=0.99725912                    PFAIL=0.00274088
```

Fig.(6) Computer listing of state Probabilities

Therefore

$$P_n = \frac{1}{1+\sum_{i=1}^{n-1} x} \qquad \ldots\ldots \qquad (4)$$

The final solution will be

$$P_i = x_i \quad P_n = \frac{x_i}{1 + \sum_{i=1}^{n-1} x_i} \qquad \ldots\ldots \qquad (5)$$

Typical results of the state probabilities of the example substation, as given by the computer algorithm are shown in fig. (6).

8. Flow Chart

The flow chart of computer program "SUBSCOM" used to get the reliability of substation will be illustrated hereinafter.

Also given is a complete FORTRAN Listing of the SUBSCOM program.

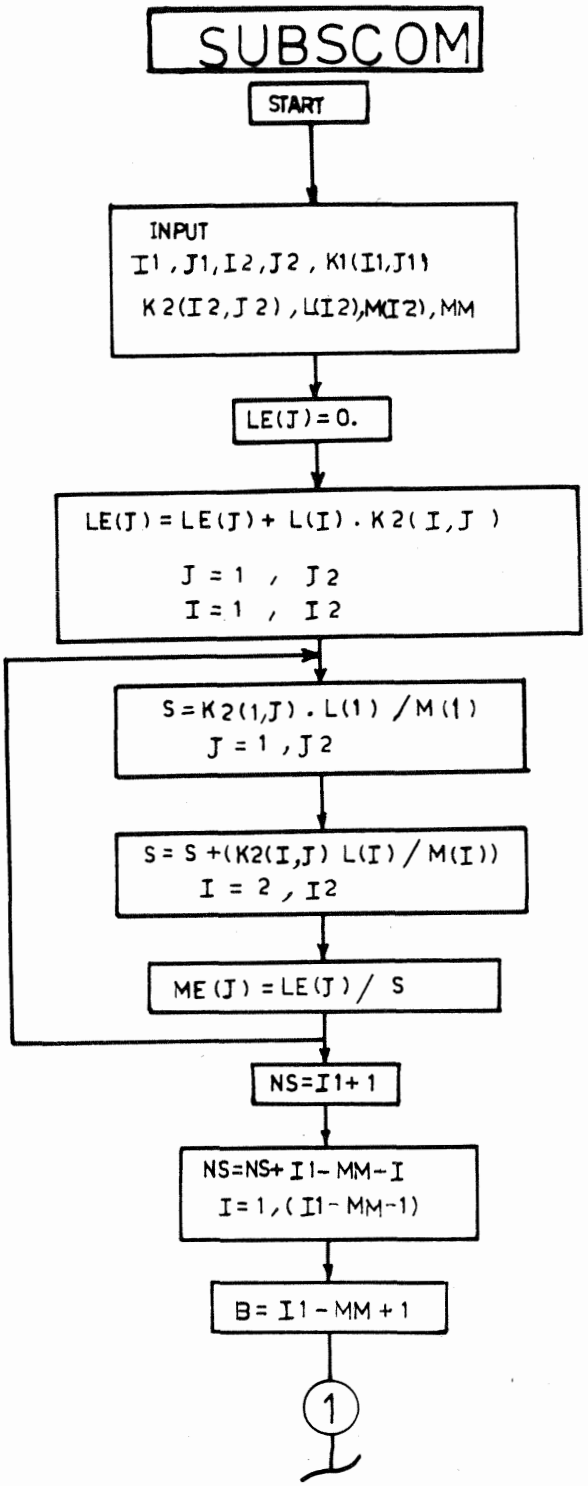
SUBSCOM
START
INPUT
I1, J1, I2, J2, K1(I1,J1)
K2(I2,J2), L(I2), M(I2), MM
LE(J) = 0.
LE(J) = LE(J) + L(I) . K2(I,J)
J = 1 , J2
I = 1 , I2
S = K2(1,J) . L(1) / M(1)
J = 1 , J2
S = S + (K2(I,J) L(I) / M(I))
I = 2 , I2
ME(J) = LE(J) / S
NS = I1 + 1
NS = NS + I1 - MM - I
I = 1, (I1 - MM - 1)
B = I1 - MM + 1
1

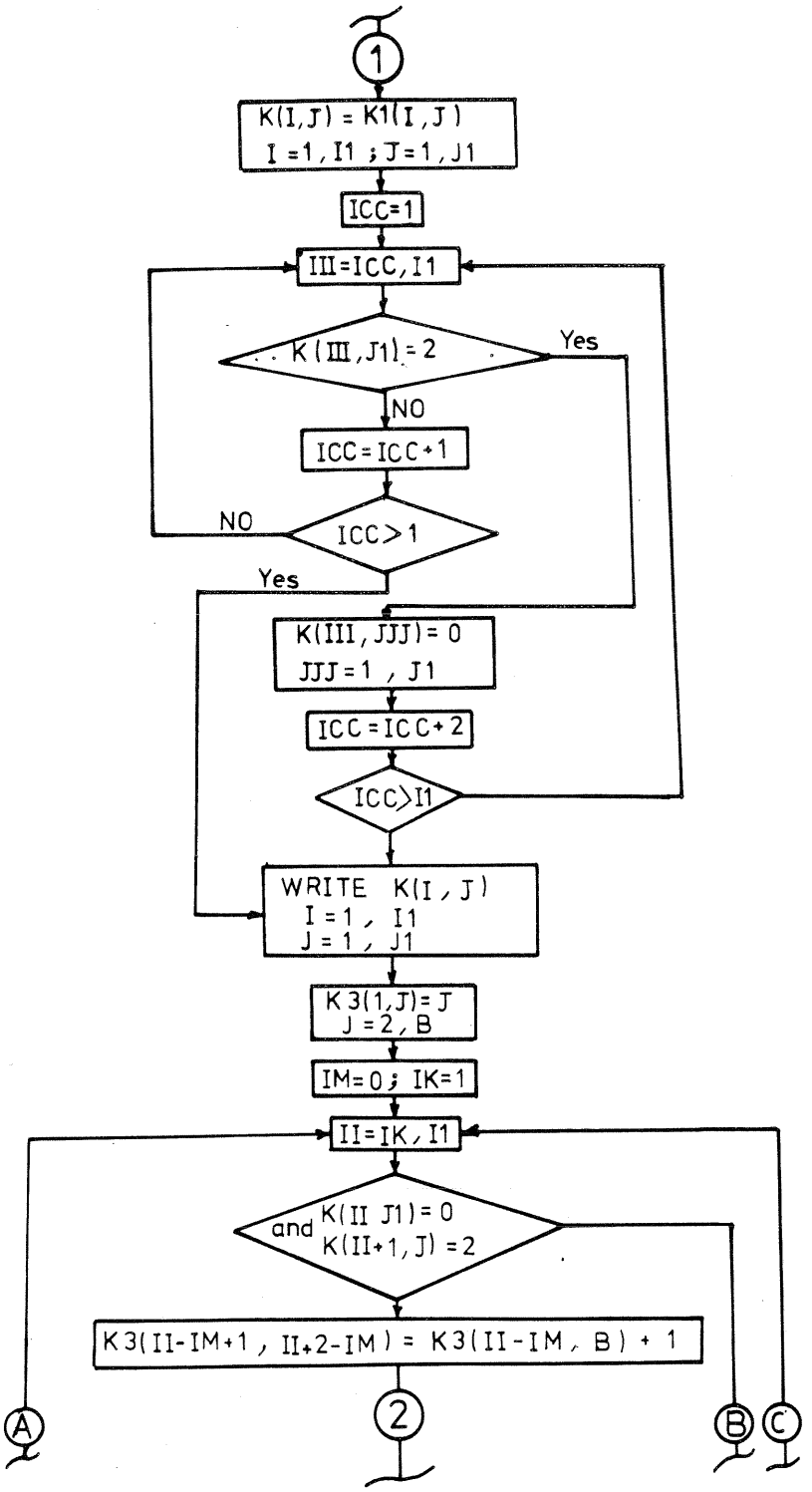
1
K(I,J) = K1(I,J)
I = 1, I1 ; J = 1, J1
ICC=1
III=ICC, I1
K(III, J1) = 2
Yes
NO
ICC=ICC+1
NO
ICC>1
Yes
K(III, JJJ) = 0
JJJ = 1 , J1
ICC=ICC+2
ICC>I1
WRITE K(I, J)
I = 1 , I1
J = 1 , J1
K3(1,J)= J
J = 2, B
IM=0; IK=1
II=IK, I1
and K(II J1) = 0
K(II+1, J) = 2
K3(II-IM+1, II+2-IM) = K3(II-IM, B) + 1
2
A
B
C

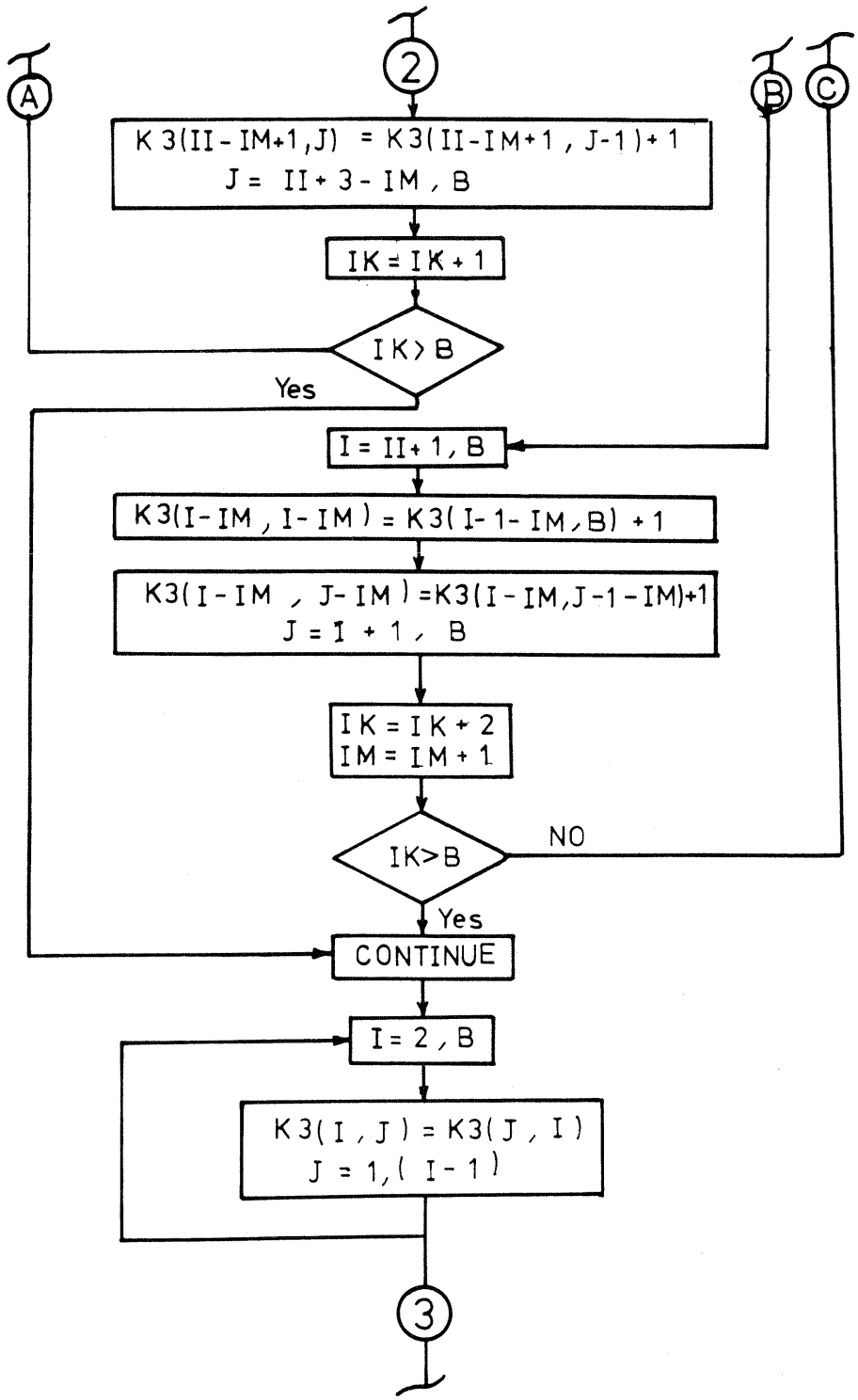
2
A
B
C
K3(II-IM+1,J) = K3(II-IM+1, J-1)+1
J = II+3-IM, B
IK = IK+1
IK > B
Yes
I = II+1, B
K3(I-IM, I-IM) = K3(I-1-IM, B) +1
K3(I-IM, J-IM) = K3(I-IM, J-1-IM)+1
J = I+1, B
IK = IK+2
IM = IM+1
IK>B
NO
Yes
CONTINUE
I = 2, B
K3(I, J) = K3(J, I)
J = 1, (I-1)
3

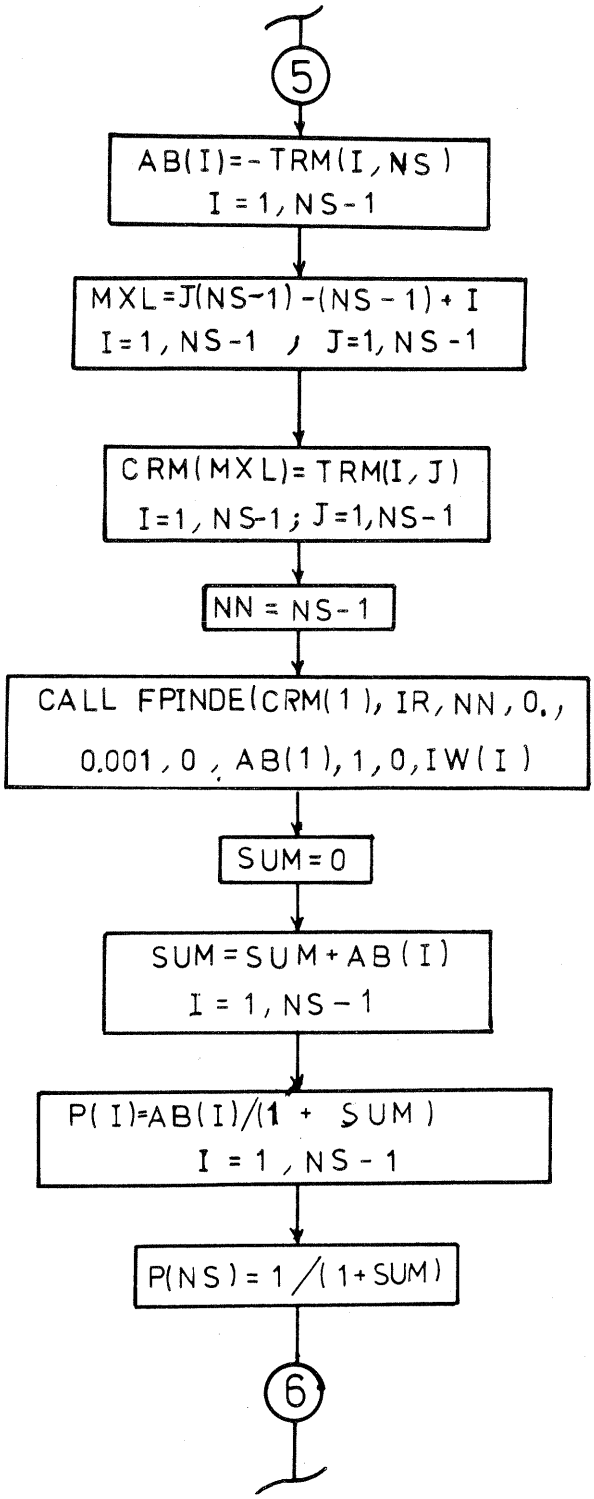
5
AB(I)=-TRM(I,NS)
I=1,NS-1
MXL=J(NS-1)-(NS-1)+I
I=1,NS-1 ; J=1,NS-1
CRM(MXL)=TRM(I,J)
I=1,NS-1; J=1,NS-1
NN=NS-1
CALL FPINDE(CRM(1),IR,NN,0.,
0.001,0,AB(1),1,0,IW(I)
SUM=0
SUM=SUM+AB(I)
I=1,NS-1
P(I)=AB(I)/(1+SUM)
I=1,NS-1
P(NS)=1/(1+SUM)
6

```
C     ****************************************************************
C                  S U B S C O M
C        A COMPUTER PACKAGE TO CALCULATE
C     RELIABILITY INDECES OF A SUBSTATION
C     ****************************************************************
C     (1)NAME:
C               SUBSCOM
C     (2)FUNCTION:
C                  GIVEN A SUBSTATION CONFIGURATION
C                  AND THE FAILURE AND REPAIR RATES
C                  OF ITS COMPONENT THE PACKAGE
C                  EVALUES THE RELIABILITY INDECES
C                  PERTINENT TO SUPPLY CUSTOMERS.
C     (3)METHOD:
C                THE ALGORITHM IS BASED ON
C                STATIONARY MARKOV PROCESS MODELLING.
C     ****************************************************************
C     *********
      MASTER SUBSCOM
C     *********
      INTEGER K1(20,20),K2(10,20),K3(20,20),D,KK(20,20),K(20,20)
     *,NSTATE(80),IW(240)
      REAL L(10),M(10),LE(20),ME(20),TRM(60,60)
     *,SS(60),CRM(3600),VH(20),VV(20),P(60),AB(60)
      READ(1,3)I1,J1,I2,J2
    3 FORMAT(4(2X,I2))
      DO 4 I=1,I1
    4 READ(1,5)(K1(I,J),J=1,J1)
    5 FORMAT(20(1X,I1))
      DO 6 I=1,I2
    6 READ(1,5)(K2(I,J),J=1,J2)
      READ(1,7)(L(I),I=1,I2)
      READ(1,7)(M(I),I=1,I2)
    7 FORMAT(8F10.8)
      READ(1,8)MM
    8 FORMAT(2X,I2)
      READ(1,70)(NSTATE(I),I=1,38)
   70 FORMAT(50(1X,I1))
      DO 90 I=1,I1
   90 WRITE(2,91)(K1(I,J),J=1,J1)
      DO 93 I=1,I2
   93 WRITE(2,91)(K2(I,J),J=1,J2)
   91 FORMAT(2 (5X,I2)//)
C     *********
C     CALCULATION OF EQUIVALENT FAILURE AND REPAIR RATES
C     *********
      DO 9 J=1,J2
      LE(J)=0.0
      DO 9 I=1,I2
      LE(J)=LE(J)+L(I)*K2(I,J)
    9 CONTINUE
      DO 10 J=1,J2
      S=K2(1,J)*L(1)/M(1)
      DO 11 I=2,I2
   11 S=S+(K2(I,J)*L(I)/M(I))
      ME(J)=LE(J)/S
   10 CONTINUE
      DO 12 J=1,J2
   12 WRITE(2,13)J,LE(J),ME(J)
   13 FORMAT(2X,2HJ=,I4,2X,3HLE=,F10.9,2X,3HME=,F10.9)
C     *********
C     CALCULATION OF NUMBER OF STATES
C     *********
      NS=I1+1
      DO 14 I=1,(I1-MM-1)
   14 NS=NS+I1-MM-I
      N=I1-MM+1
```

```
C       *********
C       FORMING MATRIX OF STATES K3
C       *********
        DO 60 I=1,I1
        DO 60 J=1,J1
   60   K(I,J)=K1(I,J)
        ICC=1
   15   DO 16 III=ICC,I1
        IF(K(III,J1).EQ.2)GO TO 17
        ICC=ICC+1
        IF(ICC.GT.I1)GO TO 19
        GO TO 15
   17   DO 18 JJJ=1,J1
   18   K(III,JJJ)=0
        ICC=ICC+2
        IF(ICC.GT.I1)GO TO 19
   16   CONTINUE
   19   DO 20 I=1,I1
   20   WRITE(2,21)(K(I,J),J=1,J1)
   21   FORMAT(20(2X,I1)//)
        DO 22 J=2,B
   22   K3(1,J)=J
        IM=0
        IK=1
   26   DO 23 II=IK,I1
        IF(K(II,J1).EQ.0.AND.K(II+1,J1).EQ.2)GO TO 24
        K3(II-IM+1,II+2-IM)=K3(II-IM,B)+1
        DO 25 J=II+3-IM,B
   25   K3(II-IM+1,J)=K3(II-IM+1,J-1)+1
        IK=IK+1
        IF(IK.GT.B)GO TO 29
        GO TO 26
   24   DO 27 I=II+1,B
        K3(I-IM,I-IM)=K3(I-1-IM,B)+1
        DO 28 J=I+1,B
   28   K3(I-IM,J-IM)=K3(I-IM,J-1-IM)+1
        IK=IK+2
        IM=IM+1
        IF(IK.GT.B)GO TO 23
   27   GO TO 26
   23   CONTINUE
   29   DO 2 I=2,B
        DO 1 J=1,(I-1)
    1   K3(I,J)=K3(J,I)
    2   CONTINUE
        DO 101 I=1,B
  101   WRITE(2,102)(K3(I,J),J=1,B)
  102   FORMAT(20(5X,I2)//)
```

```
C       *********
C       CORRESPONDING FAILUR AND REPAIR RATES OF K3
C       *********
        VH(1)=0.0
        VV(1)=0.0
        IC=1
        DO 30 I=2,I1
        IF(K3(I,I).EQ.0)GO TO 31
        IC=IC+2
        VH(I)=2*LE(IC-1)
        VV(I)=ME(IC-1)
        GO TO 30
   31   IC=IC+1
        VH(I)=LE(IC-1)
        VV(I)=ME(IC-1)
   30   CONTINUE
        DO 32 J=1,I1
   32   WRITE(2,33)J,VH(J),VV(J)
   33   FORMAT(2X,2HJ=,I2,5X,6HVH(J)=,F10.9,10X,6HVV(J)=,F10.9//)
        WRITE(2,50)(K3(1,J),J=1,B)
   50   FORMAT(4X,12(I2,8X)//)
        DO 34 I=2,B
   34   WRITE(2,35)(K3(I,J),J=1,B),VV(I)
   35   FORMAT((4X,8(I2,8X),I2,4X,F10.9)//)
        WRITE(2,36)(VH(J),J=2,B)
   36   FORMAT((10X,8F10.9)//)
C       *********
C       TRANSITION RATE MATRIX
C       *********
        DO 37 I=1,I1
        DO 37 J=1,I1
        IF(K3(I,J).EQ.0)GO TO 37
        JJ=K3(I,J)
        TRM(I,JJ)=VV(J)
   37   CONTINUE
        DO 39 I=1,I1
        DO 39 J=1,I1
        IF(K3(I,J).EQ.0)GO TO 39
        JJ=K3(I,J)
        TRM(JJ,I)=VH(J)
   39   CONTINUE
        DO 40 J=1,NS
        SS(J)=0.0
        DO 41 I=1,NS
   41   SS(J)=SS(J)+TRM(I,J)
        TRM(J,J)=-SS(J)
   40   CONTINUE
        DO 42 I=1,NS
   42   WRITE(2,43)(TRM(I,J),J=1,NS)
   43   FORMAT((5X,4(E12.5)//)
```

```
C       *********
C       CALCULATION OF THE PROBABILITY OF STATES
C       *********
        DO 44 I=1,NS-1
   44   AB(I)=-TRM(I,NS)
        DO 45 I=1,NS-1
        DO 45 J=1,NS-1
        MXL=J*(NS-1)-(NS-1)+I
   45   CRM(MXL)=TRM(I,J)
        NN=NS-1
        CALL FPINDE(CRM(1),IR,NN,0.,0.001,0,
       *AB(1),1,0,IW(1))
        SUM=0.
        DO 46 I=1,NS-1
   46   SUM=SUM+AB(I)
        DO 47 I=1,NS-1
   47   P(I)=AB(I)/(1+SUM)
        P(NS)=1/(1+SUM)
        DO 202 J=1,NS
  202   WRITE(2,49)J,P(J)
   49   FORMAT(5X,2HJ=,I2,5X,5HP(J)=,38F10.9)
        PSUCC=0.
        PFAIL=0.
        DO 75 I=1,NS
        IF(NSTATE(I).EQ.1)PSUCC=PSUCC+P(I)
        IF(NSTATE(I).EQ.0)PFAIL=PFAIL+P(I)
   75   CONTINUE
        WRITE(2,77)PSUCC,PFAIL
   77   FORMAT(10X,6HPSUCC=,F10.8,20X,5HFAIL=,F10.8)
        T=8700
        TUP=T*PSUCC
        TD=T*PFAIL
        XNTE=P(1)*LE(7)*T
        WRITE(2,85)TUP,TD,XNTE
   85   FORMAT(3(/10X,F10.8))
        STOP
        END
```

Conclusions:

1. The Markov process model proves to be a strong tool in evaluating the reliability of substation.

2. This paper attests that an exact solution involving the Markov process for reliability calculation can be tedious and time consuming especially when the number of elements in the scheme is large. The need for a computer routine which applies that process to any given substation configuration is underlined.

3. This paper presents that computer routine. This is achieved on four basic steps:

   i. The formulation of the substation configuration into computer-accessible matrices named in this paper K1 and K2.

   ii. The creation of a matrix equivalent to the state space diagram representation named K3.

   iii. The derivation of the Transition Rate Matrix directly from the matrix K3.

   iv. Solution of the linear system and producing the substation state probabilities.

REFERENCES

(1) Roy Billinton, Power System Reliability Evaluation, Gordon and Breach Science Publishers Inc., New York, N.Y. 1970.

(2) Doc. V.I. NITU, "The Philosophy of Substation Reliability", Electra No.54, 1977.

(3) P.F. Albrecht, "Reliability Evaluation of Substation Bus Arrangement", CEA Transaction, Vol. 13 Pt, III, 1974.

(4) M.S. Grover and R. Billinton, "Substation and Switching Station Reliability Evaluation", CEA Transaction, Vol. 13, Pt. III, 1974.

(5) John G. Rau, Optimization and Probability in Systems Engineering VAN-NOSTRAND - REINHOLD Company, 1970.

(6) Abdel Ghany Youssef Thesis, Cairo University, August 1979

Report No. 2

COST-BASED OPTIMIZATION OF SUBSTATION CONFIGURATION

By

Prof. S. El-Sobki H. Anis Abdel Ghany Youssef

COST-BASED OPTIMIZATION OF SUBSTATION CONFIGURATION

Prof. Dr. S. El-Sobki Dr. H. Anis Eng. Abdel Ghany Youssef

This study develops a technique for allocating the parameters, availability and unavailability rates, to each element of scheme of the possible cost. In addition, substations must be evaluated on the basis of economics in order to identify the optimization of substation and their utility as a whole in the most favourable manner. This paper analyzes the cost-availability function of any substation.

Under the conditions of a given element or equipment, from reliability point of view, starting from certain conditions imposed on the one hand by the system and on the other by the consumers to be supplied, there results a certain number of alternative configuration for the substation under the design stage. These alternatives are to be analysed in order to establish the optimum technical and economic solution. In general, the cost of a substation over a given number of years (presumably equal to its life time) is composed of the following major items:

i. Capital investment
ii. Operating charges
and iii. Cost of service interruption to the customers

From the sum of all three items any residual value of the investments is subtracted.

The cost takes the general form:

$$A = \sum_{i=1}^{n} Ii\ (1 + a)^{-i} + \sum_{i=1}^{n} C_i(1+a)^{-i} \sum_{i=1}^{n} Di(1+a)^{-i} \sum_{i=1}^{n} Vri(1+a)^{-i}$$

where

I_i : the investment in the year i (i=1, 2, 3, ..., n)

C_i : annual operating expenditures in year i.

n : number of operating years comprised in the analysis

a : Updating rate (interest rate)

D_i : average damage caused to consumers in year i by forced outages of the power supply

V_{ri}: residual value in year n of the investments in the year i.

1 Cost of Service Interruption

This study is primarily concerned with the third component of cost D which is seen to be composed of two parts.

$$D = D_d + D_s \qquad \ldots\ldots \qquad (2)$$

where

D_d : direct damages caused by forced outage

D_s : additional damages (wages, operating cost, abatement during forced outage).

The cost of direct damage is subdivided into two parts

$$D_d = d_1 + K\ t_d\ \ d_2$$

where

d_1 : the value corresponding to the damage caused by a power interruption longer than, or equal to, a critical time to.

t_d : power supply restoring time

K : a factor which accounts for the restoring time of the technological process after an outage period of t_d ($K \geqslant 1$).

d_2 : damage in monetary unit per hour.

2 Capital Cost as Related to Availability

The attempt to increase the "reliability" of substation, i.e. its quality to maintain power service continuity affects the components

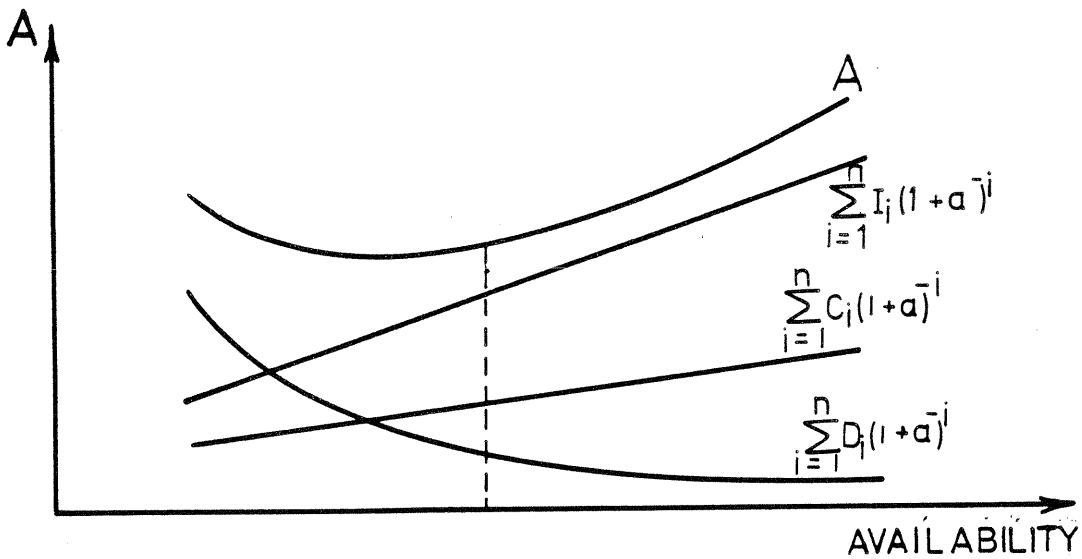

Fig. (1) Choice of optimal solution

of the cost breakdown of equation (1). As illustrated in the sketch of fig. (1), both the capital investment and the operating cost would increase as the reliability increases. This is logical since the reliability can only be improved by using extra equipment to sustain the system operation.

The third component of cost, i.e. the cost of service interruption will decrease as the system reliability increases. An optimal point where the overall cost is minimum must exist. It is the purpose of this chapter to discuss this aspect.

In the following analysis the running (operation) cost is assumed negligible compared to capital cost. This is becoming more of a fact especially with modern iron-clad substations. The compromise is made only between capital cost and the cost of forced outage.

The overall cost over the life time of the component may then take the general form

$$C = y \cdot n + x \cdot 8700 \cdot m \, (1 - A)^n \quad £ \qquad (3)$$

where

the first term is the capital cost, and the second term is the cost of service interruption. The monetary updating rate is neglected in both terms.

- y : cost of one component
- n : number of parallel redundant components
- x : cost of 1 hour service interruption
  - $\simeq$ price of 1 KWH x Kw rating
- m : life time in years
- 8700 : hours/year
- $(1-A)^n$: unavailability of one component

For proper evaluation of the effect of various parameters, the total cost is expressed relative to the capital cost of the component i.e. (c/y) giving

$$\frac{c}{y} = n + 8700 \left(\frac{x}{y}\right) m \, (1 - A)^n \qquad \ldots. \qquad (4)$$

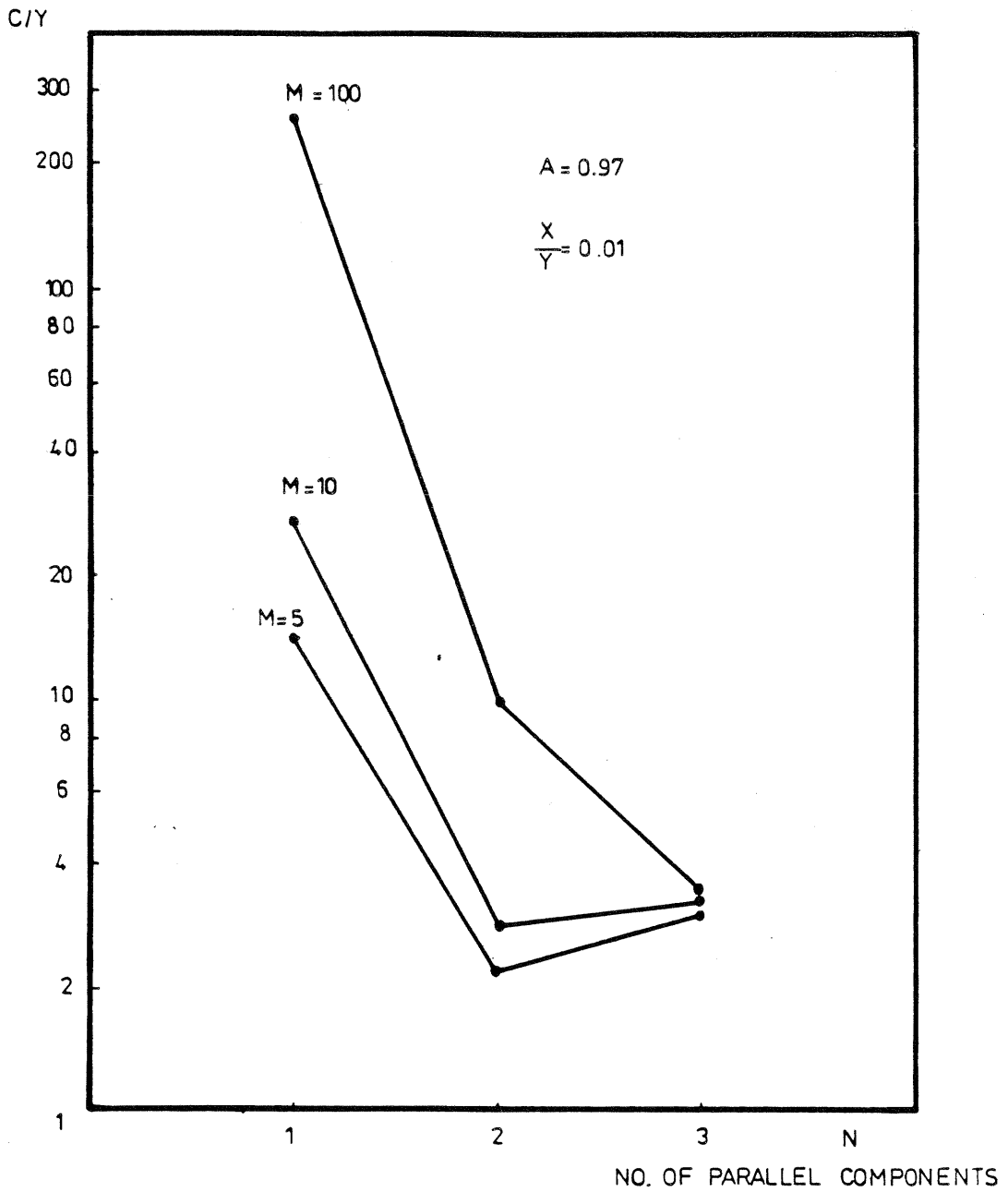

FIG.(2) EFFECT OF SUBSTATION LIFE TIME ON OPTIMUM REDUNDANCY

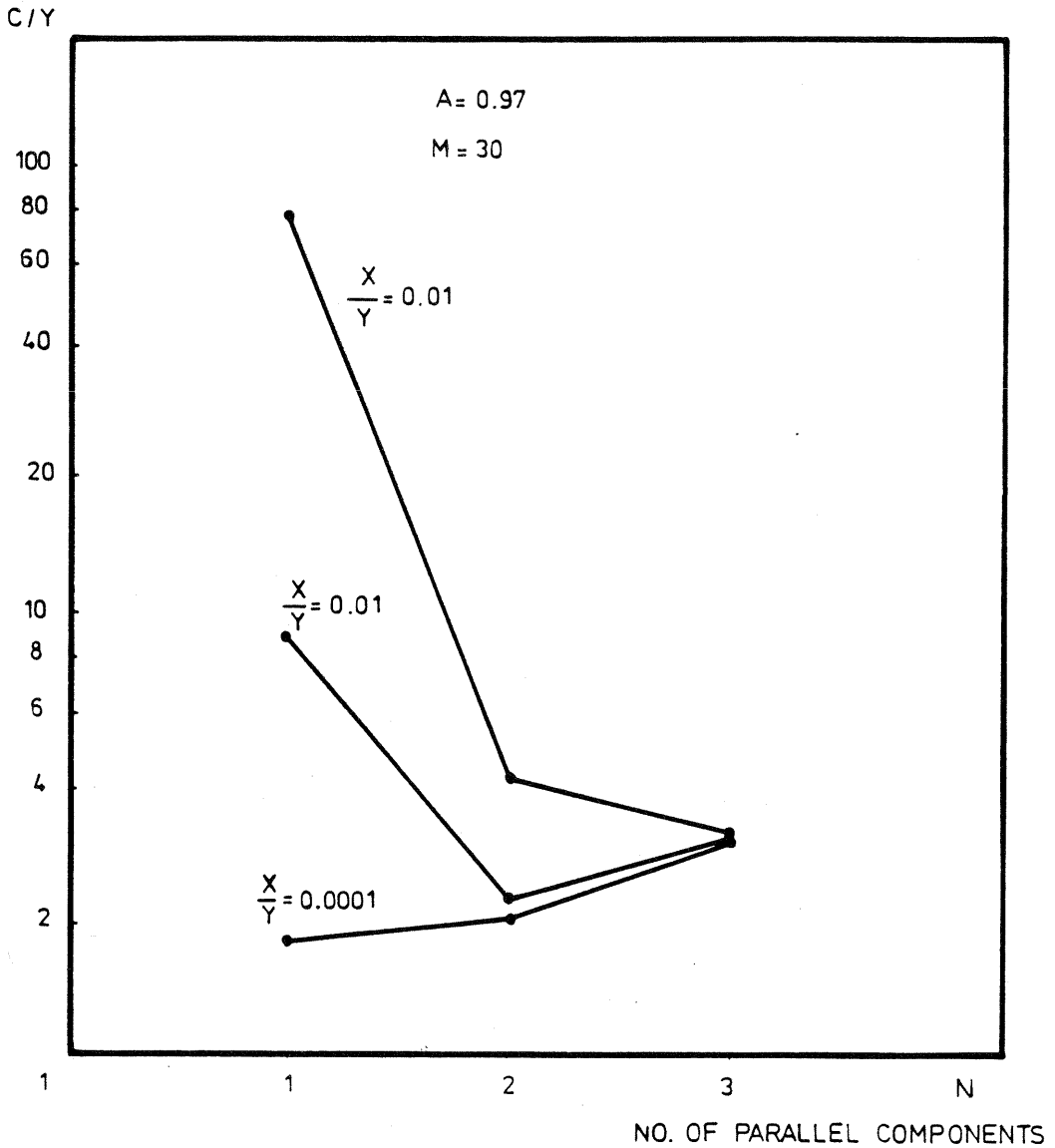

FIG(3) EFFECT OF COST OF ENERGY ON OPTIMUM REDUNDANCY

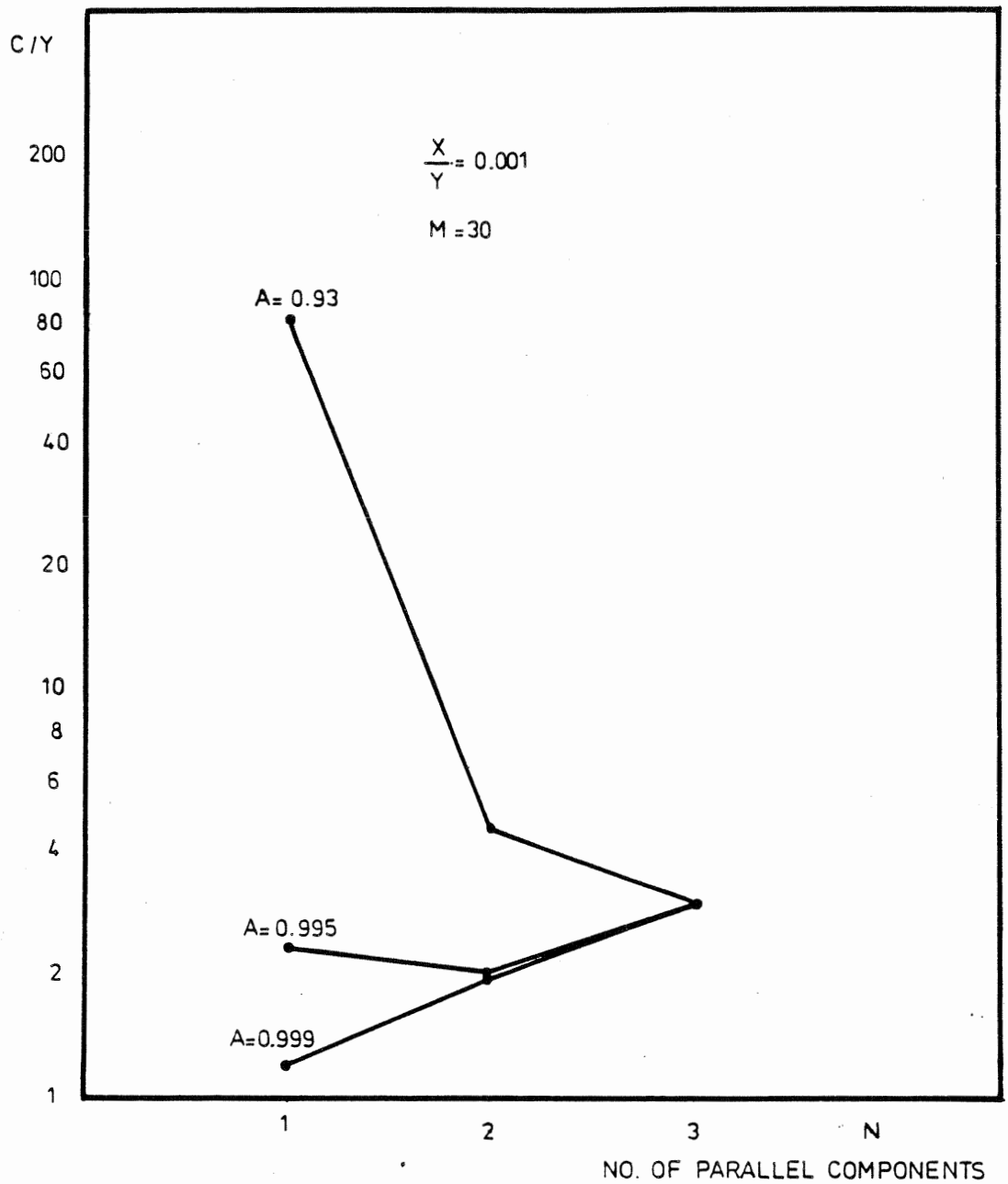

FIG. (4) EFFECT OF COMPONENT AVIALABILITY ON OPTIMUM REDUNDANCY

Three parameters are seen to influence the relative cost (c/y), namely, the number of units in parallel n, the life time m in years, the relative service interruption cost x/y in $hour^{-1}$, and the availability of one unit A. The optimal number of parallel units, i.e. that giving the lowest relative total cost is obtained by setting

$$\frac{\partial c/y}{\partial n} = o$$

That is,

$$1 + \emptyset\ (1 - A)^{n} \quad \ln\ (1 - A) = 0$$

where

$$\emptyset = 8700\ (\frac{x}{y})\ m$$

whose solution is

$$n_{op} = \frac{1}{\ln\ (1 - A)}\ \ln\ [\frac{1}{-\emptyset.\ln\ (1 - A)}] \qquad \ldots. \qquad (5)$$

To demonstrate the effect of the parameters m, x/y and A on the optimal number n Figs. (2), (3) and (4) were plotted.

The following remarks are made

1- As the expected life time of the substation equipment prolongs the number of parallel units should be increased to achieve economical optimality.

2- More units in parallel should be used as the relative cost of service interruption increases, meaning higher cost of damage and/or cheaper substation equipment.

3. Reliable equipment should be fewer in parallel number than less reliable ones.

3 Cost of Service Interruption

The evaluation of the parameter x, cost of service interruption per year is not always a straight forward exercise. Two approaches may be evoked:

1. The first approach evaluates the cost of interruption by the impact on national economy at large. Although this approach is theoretically accurate, yet its implementation is rather difficult and may lead to serious errors stemming from ignored parameters. It is believed that this approach may only be followed when dealing with heavy and specially critical industries.

2. The second approach, hich is suitable for rural, suburban communities and small industries, equates the cost of interruption to the loss of revenue which the utility would otherwise receive. In this case the interruption cost is given by

$$C = W.\ z.\ r. \qquad \text{LE/year} \qquad (6)$$

where

w : is the power demand in KW

z : is the cost of one KWH

r : is the annual average interruption time (hours)

The interruption time r is related to the substation availability A by

$$r = (1 - A)\ T \qquad (7)$$

where, T is the period of study, normally taken as 8760 hours/year. Based on this approach all following analyses will relate the substation cost to its overall availability A.

3.1 Effect of Redundancy

To show the relation between capital cost of substation scheme and its availability, the calculation of the cost and availability when adding elements in parallel to original single element will be made.

In its simple form the relation between capital cost and availability is direct. An increase in availability must be effected by a corresponding increase in the capital cost. To illustrate this concept, simple configurations are assumed where availability is estimated as the

degree of redundancy increases. The effect on the capital cost is assumed, logically, to be proportional to the number of elements. Without losing generality and for better illustration the comparisons among various schemes are made with the following assumptions:

(1) All parallel elements are identical

(2) The number of parallel elements can not be more than four.

(3) All components have the same life time which is thus fixed.

(4) All components have approximately equal relative cost.

For proper illustration, impractically small availabilities are sometimes assumed with no adverse effect on the generality of analysis. The following steps show the relation between the cost and availability A for different figures.

i. Consider a single element

Then

Cost = 1 monetary unit, and the total availability

$A_t = A$

ii. Adding a new element in parallel, gives

Cost = 2 units, and a total availability

$A_t = A1 + A2 - A_1A_2$

but $A_1 = A_2$, then

$A_t = 2A - A^2$

iii. In the case where three elements are in parallel

Cost = 3 units

$A_t = A\ (A^2 - 3A + 3)$

iv. Four parallel elements will give

Cost = 4 units, and

$A_t = 4A - 6A^2 + 4\ A^3 - A^4$

The total availability of the above cases for different values of element availability (0.7, 0.8 and 0.9) are calculated and are sketched in fig. (5).

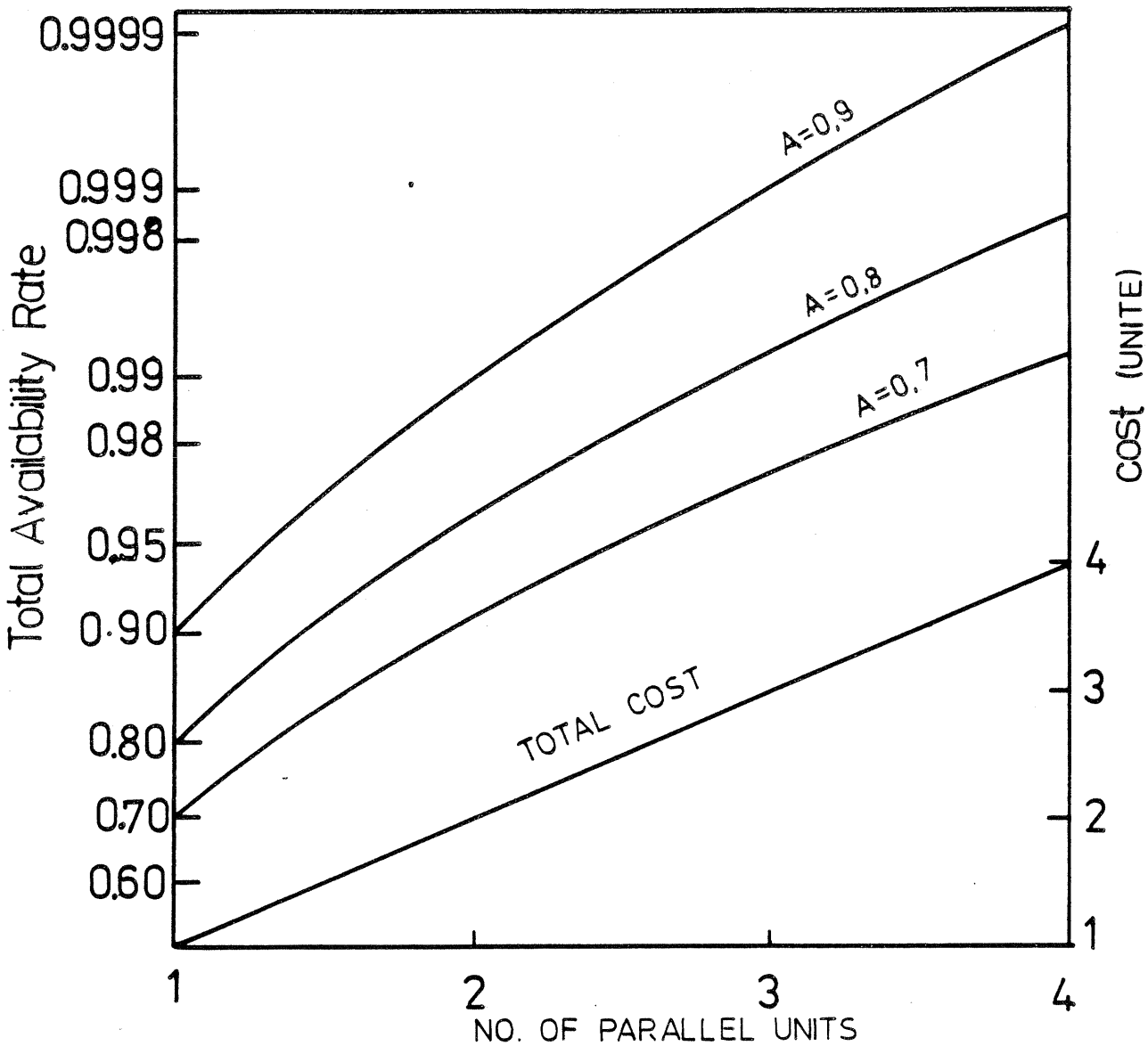

Fig. (5) EFFECT OF REDUNDANCY ON AVAILABILITY AND CAPITAL COST

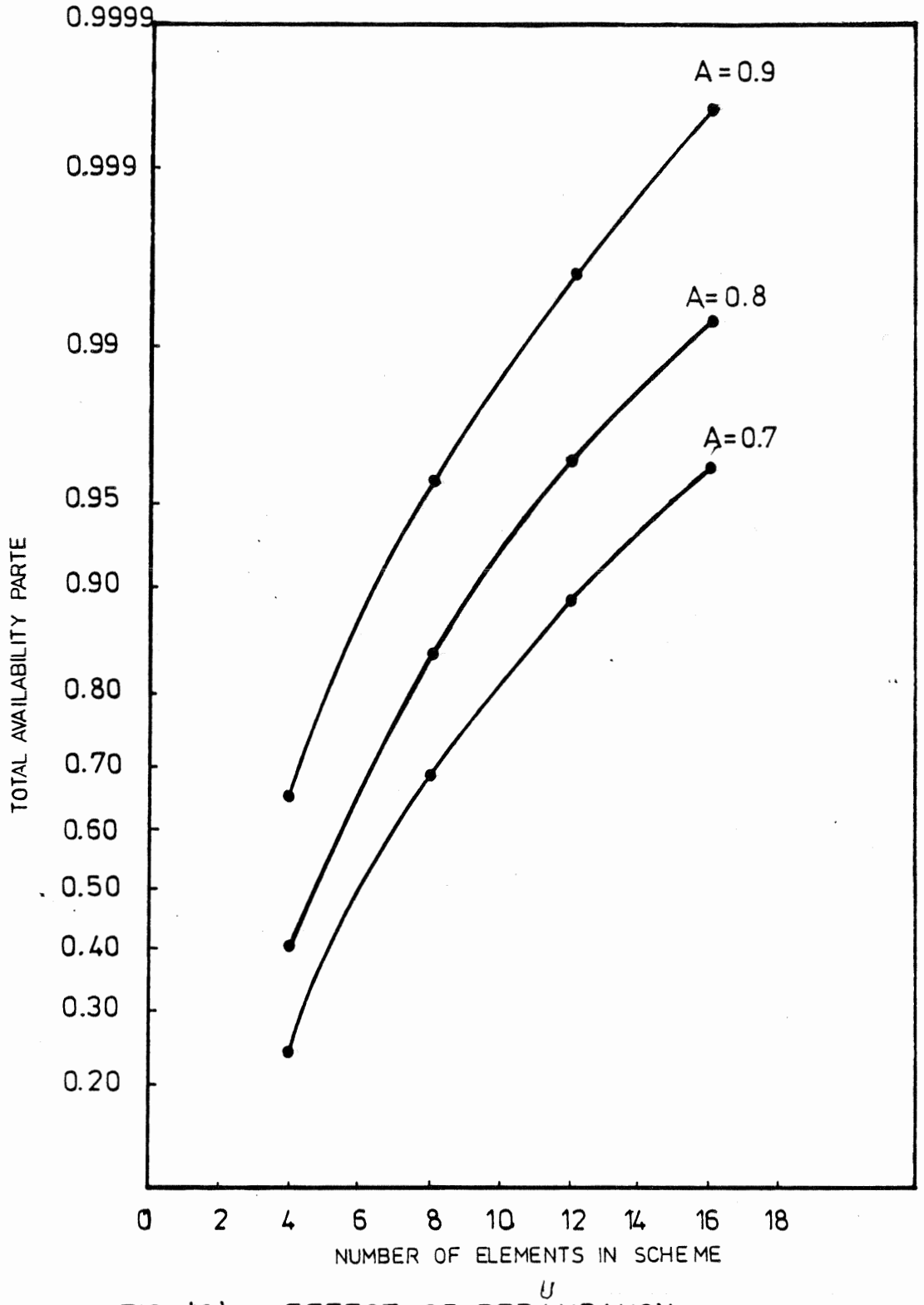

FIG (6) EFFECT OF REDANDANCY ON TOTAL AVAILABILITY

3.2 Effect of Set Configuration

The configuration of any substation or switching station consists of different elements in series-parallel combinations with each other. According to the definitions of elements and sets adopted in another report the relation between total availability rate and the number of sets can be calculated for different number of configuration element.

Given a substation with a fixed number of sets, i.e. a fixed number of successive equipment, the overall availability of the substation may be increased by increasing the number of redundant elements in any set. An increase in redundant elements implies an increase in capital cost. This situation lends itself to optimization where the optimal numbers of parallel elements per sets are sought.

4 The Availability-Cost Map

Having identified the question of trade-off between cost and availability, an attempt is made to outline the possible means of optimizing that trade-off, that is the maximum possible improvement in reliability with minimal expense. To do this the availability-cost map is defined as the set of points describing all possible configurations of a substation plotted on a graph whose abscissa is total availability and ordinate is the total capital cost.

The following parameters govern the map:

1. Availability rate of each element
2. Number of sets in series
3. Number of parallel elements in each set
4. Cost of elements

To demonstrate the availability-cost map, for a three-set substation the effect of varying the numbers of elements on the overall reliability of substation is numerically listed in Table (a). These points are plotted in fig. (8) and those referring to 2-set and 4 set substations

Configuration No.	No.of parallel element in each set			Cost of Scheme	Availability Rate of Scheme		
	1	2	3		0.7	0.8	0.9
1	1	1	1	3	0.343	0.512	0.729
2	2	1	1	4	0.4459	0.6144	0.8019
3	3	1	1	5	0.47677	0.63488	0.80919
4	4	1	1	6	0.48603	0.63897	0.80991
5	2	2	1	5	0.57967	0.73728	0.88209
6	3	2	1	6	0.619801	0.76185	0.89010
7	4	2	1	7	0.63184	0.76677	0.89091
8	3	3	1	7	0.66271	0.78725	0.89820
9	4	3	1	8	0.67558	0.79233	0.89901
10	4	4	1	9	0.6887	0.79744	0.89982
11	2	2	2	6	0.75357	0.88473	0.97029
12	3	2	2	7	0.80574	0.91422	0.979119
13	4	2	2	8	0.821392	0.92012	0.98000
14	3	3	2	8	0.86152	0.944701	0.98802
15	4	3	2	9	0.87825	0.95079	0.98891
16	4	4	2	10	0.89531	0.95693	0.9898
17	3	3	3	9	0.92116	0.97619	0.9970
18	4	3	3	10	0.93906	0.98248	0.9979
19	4	4	3	11	0.9573	0.98882	0.9988
20	4	4	4	12	0.97589	0.9952	0.9997

Table (a) No. of sets = 3

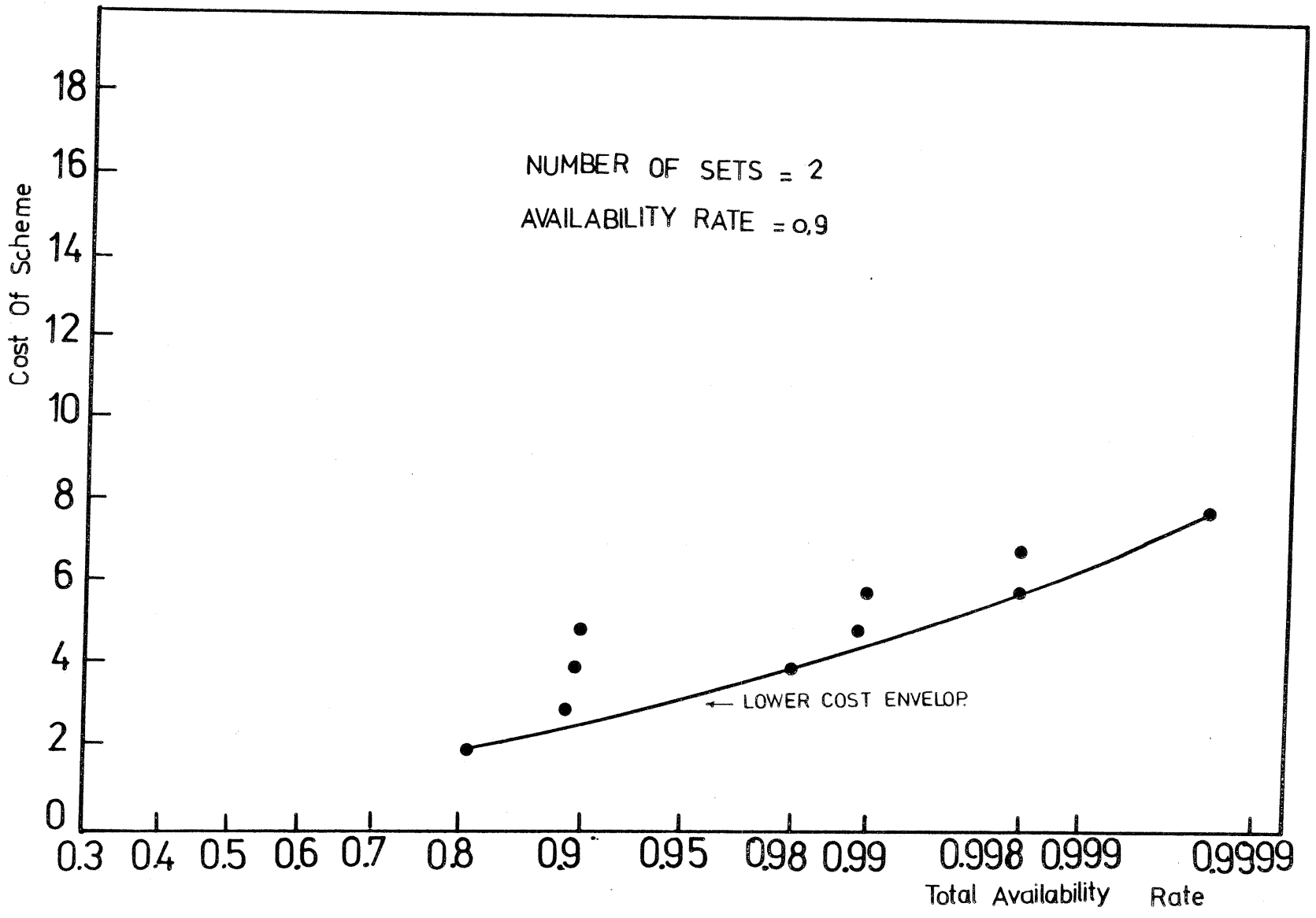

Fig. (7) AVAILABILITY - COST MAP

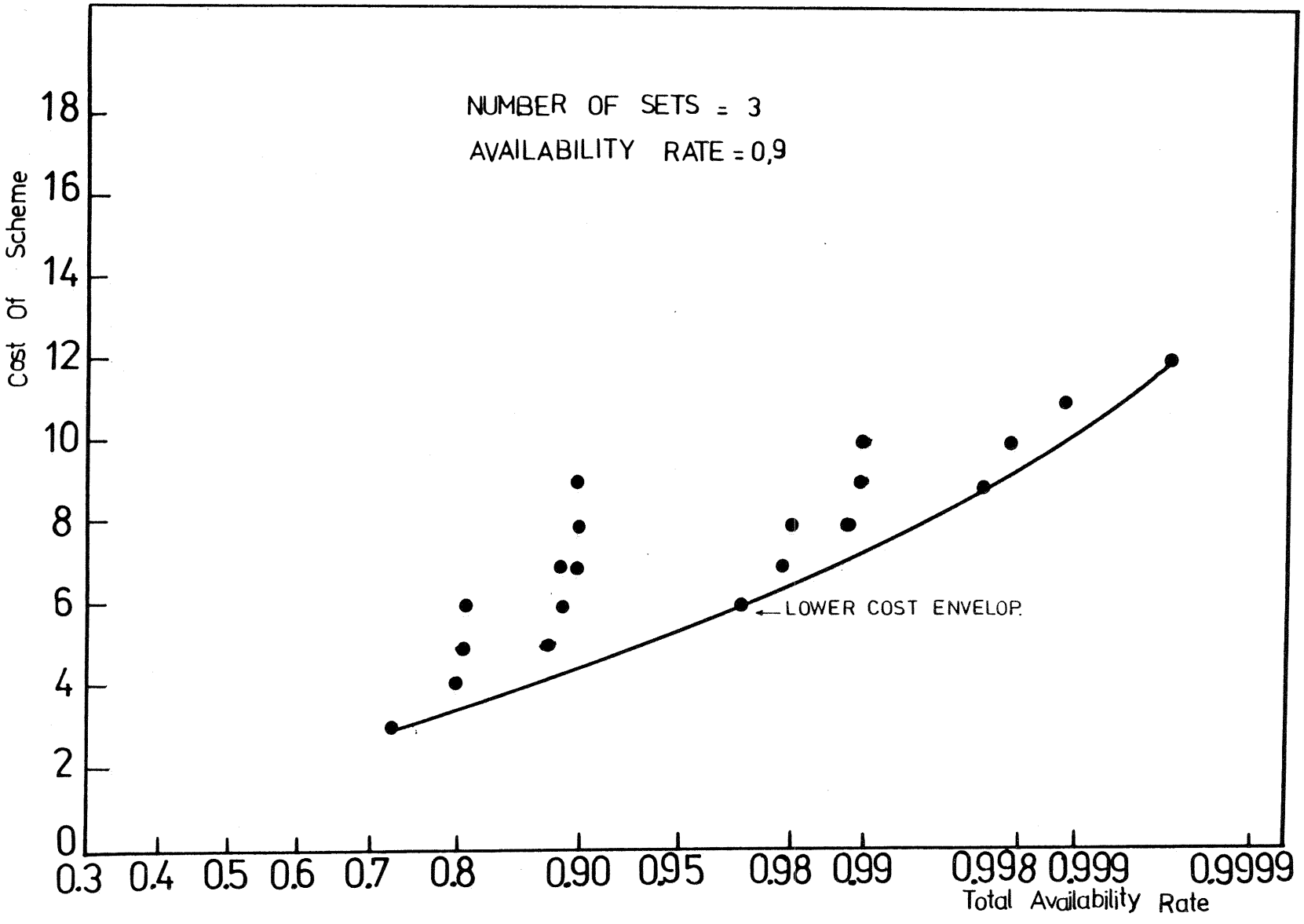

Fig. (8) AVAILABILITY-COST MAP

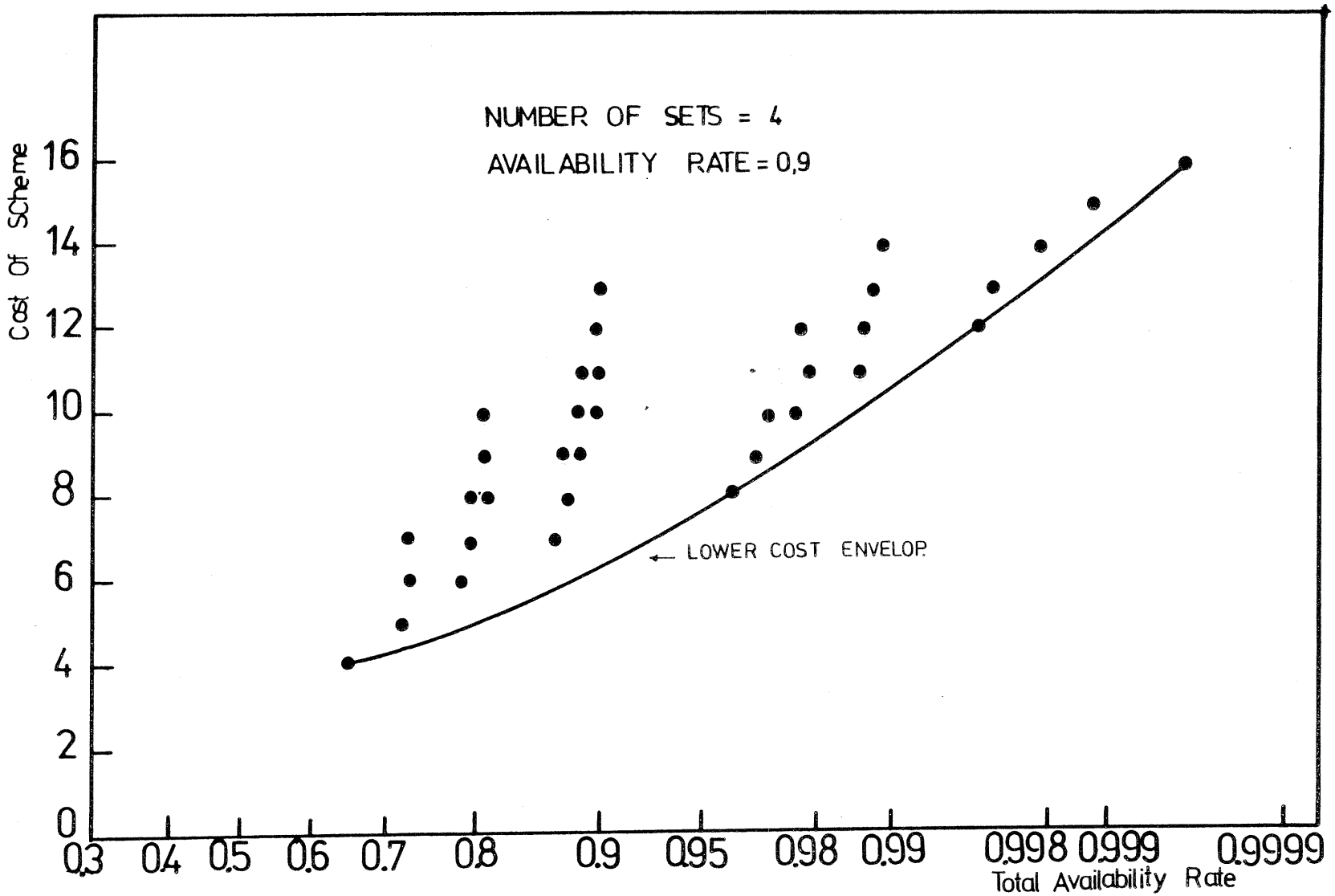

Fig. (9) AVAILABILITY-COST MAP

are plotted in fig. (7) and (9), respectively.

The optimization process is made in two dimensional space which is referred to here as the availability-cost map.

Based on fig.(7), (8) and (9), the following conclusions are made:

i. A total availability rate of the substation may be reached by many combinations of elements per set. These combinations will necessarily give different total cost figures.

ii. For a given cost the scheme may exist in many different forms each having different total availability rates.

iii. The population of points on the availability-cost map, i.e. the number of alternative designs, increases as the number of technically-imposed number of sets increases.

iv. There exists a "lowest cost envelop" of the map which passes by the points of lowest cost for each prospective availability rate as shown in fig.(7), (8) and (9).

4.1 Lowest Cost Envelop

To reach a mathematical identification of "lowest cost envelop" of a given prospective substation, the following notations are made:

1. The total number of scheme elements, which is related to cost quantity, is denoted by n.
2. The number of series sets $= \ell$
3. The number of parallel elements in the ith set $= m_i \quad i=1, \ell$

4.2 Condition of Maximum Availability

The total availability of the substation is given by

$$A_{sch} = [1 - (1 - A)^{m1}] \quad [1-(1-A)^{m2}] \; .... \quad [1-(1-A)^{m\ell}] \quad .... \tag{8}$$

where $$\sum_{i=1}^{\ell} m_1 = n$$

If the scheme consists of 2 sets only

$$A_{sch2} = 1 - (1-A)^{m1} - (1-A)^{m2} + (1-A)^{m1 + m2} \quad .... \tag{9}$$

And if the scheme consists of 3 sets, then

$$A_{sch3} = 1 - \sum_{i=m}^{m3} (1-A)^{i} + (1-A)^{m1 + m2} + (1-A)^{m1 + m3} +$$

$$(1-A)^{m2 + m3} - (1-A)^{m1 + m2 + m3} \quad \ldots\ldots \quad (10)$$

Therefore, for any number of sets ℓ, the expression for the total availability is

$$A_{sch} = 1-[(1-A)^{m1} + (1-A)^{m2} + \ldots. + (1-A)^{m\ell}] + \text{smaller terms}$$

$$\ldots. \quad (11)$$

Defining Q to be the unavailability of one element, i.e.

$$A + Q = 1$$

Also defining the overall unavailability of the system to be F, then according to equation (11)

$$F = Q^{m1} + Q^{m2} + \ldots. + Q^{m\ell} \quad \ldots\ldots \quad (12)$$

The error in this equality will be discussed later.

Equation (12) may be rewritten as

$$F = Q^{m1} + Q^{m2} + \ldots\ldots + Q^{n-\sum_{i=1}^{\ell-1} mi} \quad \ldots\ldots \quad (13)$$

Maximum availability is obtained at minimum unavailability F. The condition for minimum F is reached by differentiating the above equation with respect to m_1, m_2, ... m_ℓ and equating to zero.

$$\frac{\partial F}{\partial m_1} = Q^{m1} \ln Q - Q^{n-\sum_{1}^{\ell-1} mi} \ln Q = 0 \quad \ldots\ldots \quad (14)$$

$$\frac{\partial F}{\partial m_1} = Q^{m2} \ln Q - Q^{n-\sum_{1}^{\ell-1} mi} \ln Q = 0$$

$$\frac{\partial F}{\partial m_{\ell-1}} = Q^{m_{\ell-1}} \quad \ln Q - Q^{n-\sum_{1}^{\ell-1} mi} \quad \ln Q = 0$$

These constitute a set of -1 nonlinear equations of the form

$$Q^{m1} \quad n\,Q = Q^{n-\sum_{1}^{\ell-1} mi} \quad \ln Q \tag{15}$$

$$Q^{m2} \quad n\,Q = Q^{n-\sum_{1}^{\ell-1} mi} \quad \ln Q$$

- - - - - - - - - - - - - - - - - -

- - - - - - - - - - - - - - - - - -

$$Q^{m}\ -1 \quad \ln Q = Q^{n-\sum_{1}^{\ell-1} mi} \quad \ln Q$$

Therefore,

$$Q^{m1} \quad \ln Q = Q^{m2} \quad \ln Q = \ldots\ldots = Q^{m_{\ell}-1} \quad \ln Q$$

giving

$$m_1 = m_2 = \ldots\ldots = m_{\ell-1} = m_{\ell} \quad \ldots\ldots \tag{16}$$

For a given total cost the maximum availability rate of the scheme can be reached when each set has the same number of parallel elements. This is, thus the definition of the "lowest cost envelop."

5 The Case of Unequal Availability Rates

Suppose now that the elements of each set of the scheme have different unavailability rates (Q). Equation (13) becomes

$$F = Q_1^{m1} + Q_2^{m2} + \ldots\ldots + Q^{n-\sum_{1}^{\ell-1} mi} \quad \ldots\ldots \tag{17}$$

Differentiating with respect to the number of parallel element in each set, $(m_1, m_2, \ldots, m_1)$

$$\frac{\partial F}{\partial m_1} = Q_1^{m1} \ln Q_1 - Q_\ell^{n-\sum_1^{\ell-1} mi} \ln Q_\ell = 0 \qquad \ldots\ldots \qquad (18)$$

$$\frac{\partial F}{\partial m2} = Q_2^{m2} \ln Q_2 - Q_\ell^{n \; -\sum_1^{\ell-1} mi} \ln Q_\ell = 0$$

- -

- -

And so on until

$$\frac{\partial F}{\partial m_{\ell-1}} = Q_{\ell-1}^{m_{\ell-1}} \ln Q_{\ell-1} - Q_\ell^{n \sum_1^{\ell-1} mi} \ln Q_\ell = 0$$

This set of equations is expressed by

$$Q_{r-1}^{mr-1} \ln Q_{r-1} = Q_r^{n-\sum_1^{r-1} mi} \ln Q_r$$

where r = 2, ... ,

Therefore

$$Q_r^{m_r} = Q_{r-1}^{m_{r-1}} \qquad \frac{\ln Q_{r-1}}{\ln Q_r} \qquad r = 2, \ell$$

or, $mr \ln Qr = m_{r-1} \ln Q_{r-1} + \ln \left(\frac{\ln Q_{r-1}}{\ln Q_r}\right)$

This relates the number of parallel elements in the rth set to that in the $(r - 1)^{th}$ set as follows:

$$m_r = \frac{m_{r-1} \ln Q_{r-1} + \ln \left(\frac{\ln Q_{r-1}}{\ln Q_r}\right)}{\ln Q_r} \qquad \ldots\ldots \qquad (19)$$

which can be written as

$$m_r = A_r m_{r-1} + b_r \qquad r = 2, \ell \qquad \ldots\ldots \qquad (20)$$

where,

$$A_r = \frac{\ln Q_{r-1}}{\ln Q_r}$$

$$b_r = \ln \left(\frac{\ln Q_{r-1}}{\ln Q_r}\right) / \ln Q_r$$

In the case where all elements have the same unavailability rate

$$Qr = Q_{r-1}$$

substituting in equation (19)

Then

$$mr = m_{r-1} \quad \ldots\ldots\ldots\ldots\ldots\ldots\ldots\ldots\ldots \quad (21)$$

and

$$a = 1 \ , \quad b = 0$$

which is the same result obtained earlier.

The implementation of condition (20) is attained as follows:

i. By writing down the ℓ-1 linear equations it will be clear which set should have the minimum number of parallel elements.

ii. This set should be made to contain one element.

iii. The other sets will subsequently have elements in parallel directed by the equation (20).

Alternatively, an upper limit may be put on the cost and the maximum availability that can be reached within that limit is sought. The cost limit amounts to a limit on the number of elements n. In this case the equations (20) is supplemented by the equation:

$$m_1 + m_2 + m_3 + \ldots. + m_5 = n$$

and the -1 equations of (20) are then

$$\begin{array}{lll}
a_2\, m_1 - m_2 & & = -\, b_2 \\
\quad a_3\, m_2 - m_3 & & = -\, b_3 \\
\qquad a_4 m_3 - m_4 & & = -\, b_4 \\
\qquad - & & \\
\qquad - & & \\
\qquad\qquad a_r\, m_{r-1} - m_r & & = -\, b_r \\
\qquad\qquad - & & \\
\qquad\qquad\qquad a_\ell\, m_{\ell-1} - m_\ell & & = -\, b_\ell
\end{array}$$

In matrix form this appears as

$$
\underbrace{\begin{bmatrix}
1 & 1 & 1 & 1 & 1 & \cdots\cdots & 1 & 1 & 1 \\
a_2 & -1 & 0 & & & \cdots\cdots & 0 & 0 & 0 \\
0 & a_3 & -1 & 0 & 0 & \cdots\cdots & 0 & 0 & 0 \\
0 & 0 & a_4 & -1 & 0 & & 0 & 0 & 0 \\
 & & & & & & & & \\
 & & & & & & & & \\
 & & & & & & & & \\
 & & & & & & & & \\
 & & & & & & & & \\
0 & 0 & 0 & 0 & 0 & \cdots\cdots & 0 & a_\ell & -1
\end{bmatrix}}_{\ell \times \ell}
\underbrace{\begin{bmatrix} m_1 \\ m_2 \\ m_3 \\ m_4 \\ \\ \\ \\ \\ \\ m_\ell \end{bmatrix}}_{\ell \times 1}
=
\underbrace{\begin{bmatrix} n \\ -b_2 \\ -b_3 \\ -b_4 \\ \\ \\ \\ \\ \\ -b_\ell \end{bmatrix}}_{\ell \times 1}
\quad \ldots\ldots (22)
$$

Conclusions

(1) The total cost of substation components is composed of their capital cost plus the cost of service interruption taken over a pre-specified number of years. The addition of an extra component in redundance increases the first cost part and reduces the second, an optimal situation is said to exist.

(2) The parameter influencing the optimal number of redundant components are their installation cost relative to the cost of energy, their forced outage rate and the design life time of the substation.

(3) The lowest cost envelop is introduced as the locus of minimal cost alternative configuration of substation.

(4) If all components have approximately equal availabilities and price, then optimality is reached when the numbers of redundant components for all apparatus are made equal.

References

(1) Westinghouse Electric Corporation, "Subtransmission and Distribution Substations", Electric Utility Engineering, Reference book, Volume 3, 1965.

(2) Doc. V. INITU, "The Philosophy of Substation Reliability" Electra No.54, 1977.

(3) John G. Rau, Optimization and Probability in Systems Engineering, VAN-NOSTRAND-REINHOLD Company, 1970.
August 1979.

(4) Abdel Ghany Youssef Thesis, Cairo University, August 1979

Report No. 3

DATA ACQUISITION AND APPLICATION OF SUBSTATION RELIABILITY EVALUATION IN EGYPT

By

Abdel Ghany Youssef

DATA ACQUISITION AND APPLICATION OF SUBSTATION RELIABILITY EVALUATION IN EGYPT

Eng. Abdel Ghany Y. Mohamed

In application to a typical Egyptian substation, the Kafr El-Sheikh 66/11 kV substation was chosen. The capacity of the transformer is 2 x 4 M.V.A. It is fed from a switching station of drainage No.7 via two circuits at 66 kV. The output goes on six feeders of 11 kV two of which feed the Municipality; two feeders supply a factory and the last two feeders feed the local villages.

The single line diagram of the substation is illustrated in fig. (1) and its consequent logic scheme is illustrated in fig. (2) The data required to run the substation reliability evaluation package SUBSCOM are primarily the equivalent rates of failure and repair of the system elements. Those rates are calculated from the record of components failure and repair. Table I shows a typical log. sheet for a part of the studied substation. The time to failure and repair are later gathered and used to evaluate the failure and repair rates.

Month	Failure Time		L1	L2	TR1	TR2	CB1	CB2	Main-tenance
	Hour	Min.							
June 1976	-	5	x						
	-	2		x					
	4	-							x
	-	5			x	x			
	-	1					x		
	-	1					x		
July	-	3	x						
	-	10		x					
	4	-							x
August	4								x
Sept.	-	1			x				
	-	2			x				
	4	2						x	
	4								x
Oct.		2	x						
		2		x					
		2						x	
	4								x
Nov.	-	1			x				
	4	-						x	
Dec.	4	-						x	
Jan. 1977	4							x	
	-	27		x					
Feb.	4							x	
March	4	-						x	
	-	2					x		
	-	2					x		
	-	2					x		
	-	2	x						
	-	5		x					

Table I

Sample Log Sheet of Substation

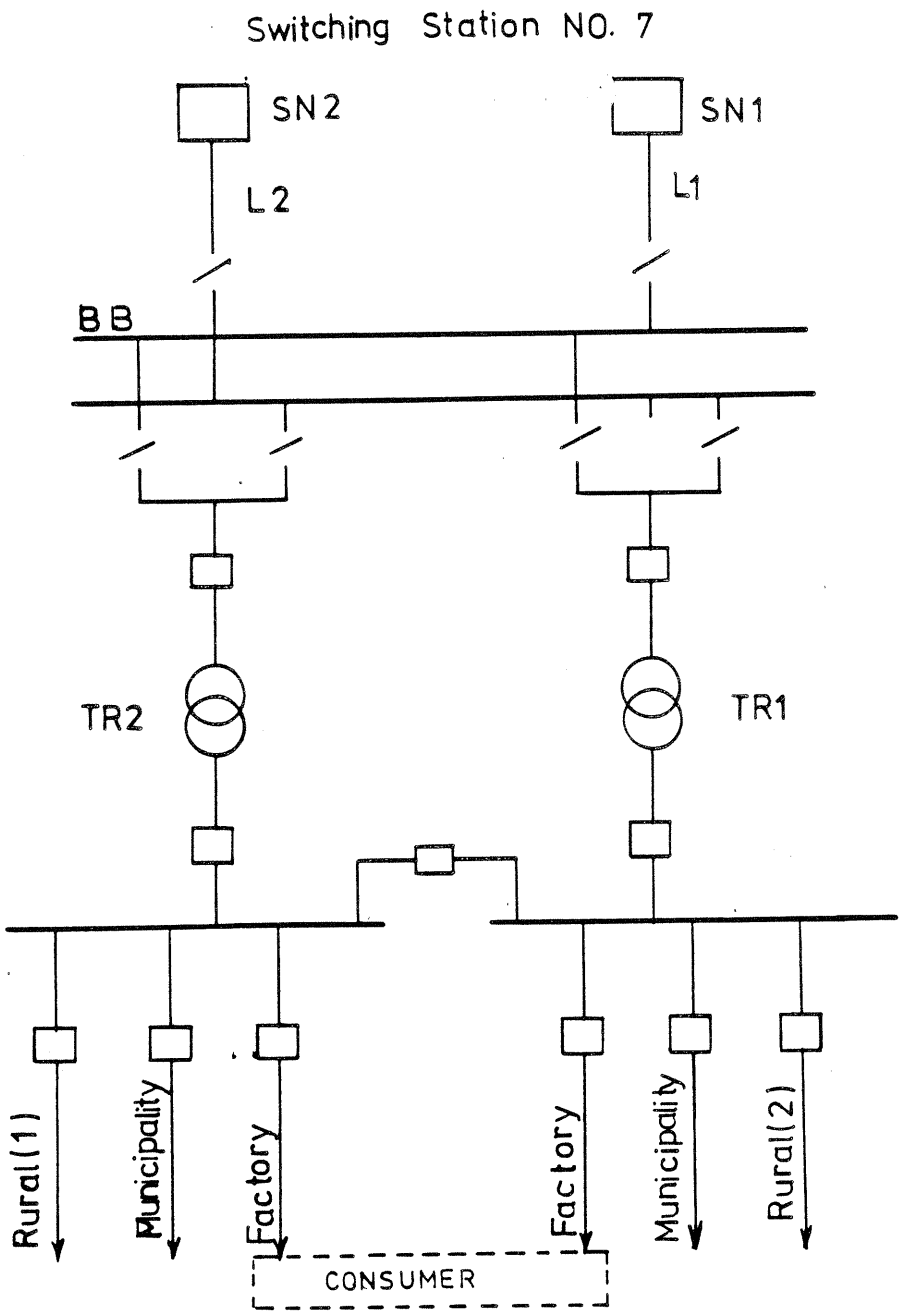

Fig (1) SINGLE LINE DIAGRAM OF KAFR EL SHEIKH SUBSTATION

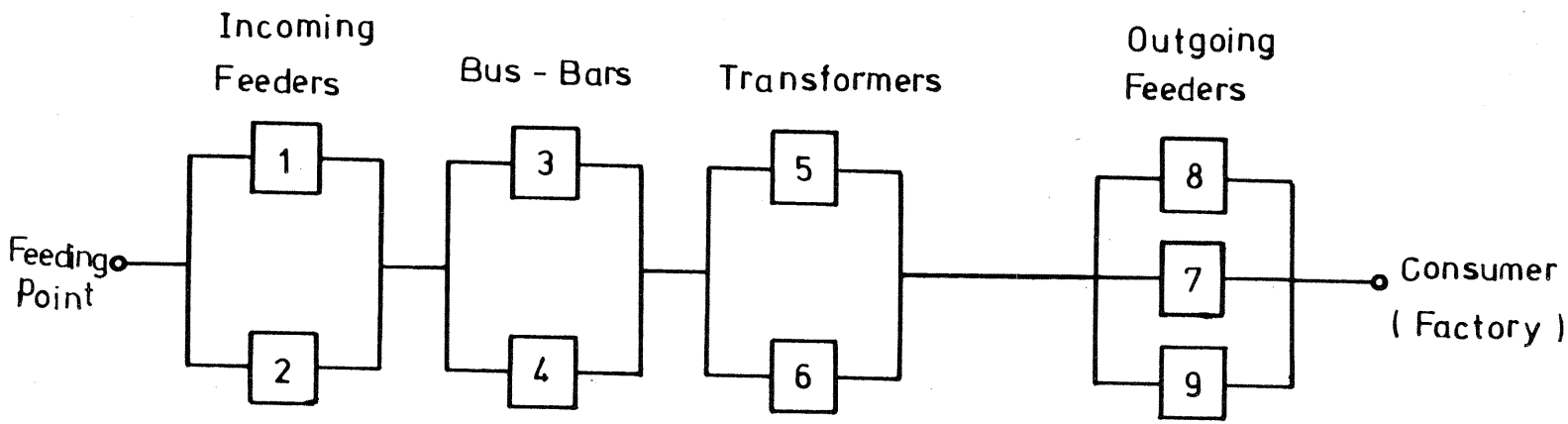

Fig (2) SCHEME OF KAFR EL SHEIKH SUBSTATION

Matrix K1

For the substation the matrix K1 is formed below:

$$K1 = \begin{array}{c} \\ 1 \\ 2 \\ 3 \\ 4 \\ 5 \\ 6 \\ 7 \\ 8 \\ 9 \end{array} \begin{array}{c} \begin{array}{ccccc} 1 & 2 & 3 & 4 & 5 \end{array} \\ \begin{bmatrix} 1 & & & & \\ 1 & & & & \\ & 1 & & & \\ & 1 & & & \\ & & 1 & & \\ & & 1 & & \\ & & & 0 & 1 \\ & & & & 1 \\ & & & & 1 \end{bmatrix} \end{array}$$

The number of alternative pairs of elements = a = 1

Matrix K2

The matrix K2 is also created as shown hereinafter

K2 =

	1	2	3	4	5	6	7	8	9	λ	μ
CB					2	2	1	1	1	0,0004077	0,1302354
D.S	1	1	2	2						0,0000251	0,5003234
B.B			1	1						0.000021	0.60204
TR					1	1				0.00028617	0.0415655
L1	1									0.00171798	0.5197811
L2		1								0.0019470	0.587051
SN_1	1									0.000061	0.1305
SN_2		1								0.000215	0.24003

Equipment-Element Matrix with Failure and repair vectors

Matrix K3

As produced by the computer the matrix K3 is given as follows:

	2	3	4	5	6	7	8	9	
2	0	10	11	12	13	14	15	16	.471926392
3	10	0	17	18	19	20	21	22	.513108778
4	11	17	[illegible]	23	24	25	26	27	.526562931
5	12	18	23	0	28	29	30	31	.526562931
6	13	19	24	28	0	32	33	34	.083416675
7	14	20	25	29	32	0	35	36	.083416675
8	15	21	26	30	33	35	0	37	.130232540
9	16	22	27	31	34	36	37	38	.130232540

.001804080.002187170.[illegible]712[illegible].[illegible]712[illegible].[illegible]1[illegible]87715.[illegible]1[illegible]87715.[illegible]77[illegible].[illegible]801540

Fig. (9) Computer List of the Matrix of States

J= 1	P(J)=.957443583
J= 2	P(J)=.003660115
J= 3	P(J)=.004081185
J= 4	P(J)=.000129462
J= 5	P(J)=.000129462
J= 6	P(J)=.012484566
J= 7	P(J)=.012484566
J= 8	P(J)=.002946381
J= 9	P(J)=.005892762
J=10	P(J)=.000015602
J=11	P(J)=.000000495
J=12	P(J)=.000000495
J=13	P(J)=.000047726
J=14	P(J)=.000047726
J=15	P(J)=.000011263
J=16	P(J)=.000022527
J=17	P(J)=.000000552
J=18	P(J)=.000000552
J=19	P(J)=.000053217
J=20	P(J)=.000053217
J=21	P(J)=.000012559
J=22	P(J)=.000025118
J=23	P(J)=.000000018
J=24	P(J)=.000001688
J=25	P(J)=.000001688
J=26	P(J)=.000000398
J=27	P(J)=.000000797
J=28	P(J)=.000001688
J=29	P(J)=.000001688
J=30	P(J)=.000000398
J=31	P(J)=.000000797
J=32	P(J)=.000162792
J=33	P(J)=.000038419
J=34	P(J)=.000076839
J=35	P(J)=.000038419
J=36	P(J)=.000076839
J=37	P(J)=.000018134
J=38	P(J)=.000036268

PSUCC=0.99671935 PFAIL=0.00328065

Fig.(4.. State Probabilities

LONG TERM INVESTMENT PLANNING OF THE EGYPTIAN ELECTRIC POWER SYSTEM

SECTION IV

POWER SYSTEM RELIABILITY ASSESSMENT NETWORK RELIABILITY

Report No. 1

MINIMUM CUT-SET/MAXIMUM FLOW APPROACH

F. Fouad

MINIMUM CUT-SET/MAXIMUM FLOW APPROACH

This report describes the maximum flow-minimum cut set approach to the evaluation of composite power system reliability. The algorithm can be applied to any electrical power grid to determine its reliability indices. A grid may consist of any number of generating stations and transmission lines, and it may feed any number of load points. By using this algorithm, the minimal cut sets of a network can be determined, hence its probability and frequency of failure can be calculated. Also by using this algorithm, the maximum flow of power that can be transmitted from the set of the generating stations of the network through its transmission lines to any load point on it can be determined. Reliability indices such as the loss of load probability "LOLP" and the demand not served "DNS" of any power network can thus be estimated.

GENERAL DEFINITIONS

I A graph: consists of a set of buses and a set of pairs of buses called elements. A graph is connected if there exists a path from any bus i to any bus j. In a directed graph, the pairs of buses are ordered, indicating the unidirectional flow capability of the element.

II A Cut-Set: K_{S-L}, in a directed graph containing a source node, S , and a demand node, L, is defined as a set of elements whose removal from the graph breaks all directed paths from bus S to bus L. The set of all such S-L cuts is denoted by K.

III The capacity of Cut-Set: $C(K_{S-L})$, is the sum of the capacities of all the elements defining the K_{S-L} cut.

IV <u>A minimum Cut-Set</u>: C(M) is a cut whose capacity is less than or equal to the Capacity of any other S-L cut. It is possible to have more than one minimum cut set graph.

MINIMUM CUT-SET MANIPULATION

In the minimal cut the blocks are in parallel as all of them must fail to produce a cut. The minimal cuts themselves are, however, in series as even a single cut ensures failure. Denoting the failure of the ith cut set by $\bar{C}_i$, the probability of system failure is

$$P_f = P(\bar{C}_1 \cup \bar{C}_2 \cup \bar{C}_3 \cup \cdots \bar{C}_n) \tag{1}$$

$$\begin{aligned} P_f = {} & [P(\bar{C}_1) + P(\bar{C}_2) + P(\bar{C}_3) + \ldots P(\bar{C}_n)]\binom{n}{1} \text{ terms} \\ & - [P(\bar{C}_1 \cap \bar{C}_2) + P(\bar{C}_1 \cap \bar{C}_3) + \ldots P(\bar{C}_i \cap \bar{C}_j)]\binom{n}{2} \text{terms} \\ & \qquad\qquad\qquad\qquad\qquad\qquad i \neq j \\ & + [P(\bar{C}_1 \cap \bar{C}_2 \cap \bar{C}_3) + P(\bar{C}_1 \cap \bar{C}_2 \cap \bar{C}_4) + \ldots P(\bar{C}_i \cap \bar{C}_j \cap \bar{C}_k)]\binom{n}{3} \text{terms} \\ & \qquad\qquad\qquad\qquad\qquad\qquad\qquad\qquad i \neq j \neq k \\ & - \ldots\ldots\ldots\ldots \\ & + (-1)^{n-1} [P(\bar{C}_1 \cap \bar{C}_2 \cap \ldots \bar{C}_n)]\binom{n}{n} \text{ terms} \end{aligned} \tag{2}$$

the total number of terms in this expression is $2^n - 1$ whenre n is the number of cut sets. It can be seen from equation (2) that the independence of components need not be postulated. All that is needed is the evaluation of all the terms of the expansion (2). In the case of dependent failures, however, the entire state transition diagram may have to be drawn to evaluate the above terms. This method is therefore of importance for independent components. As the number of cut sets increases, the expansion of all the terms becomes a

formidable task. In such cases, useful approximate formula can be obtained by Boole's inequality:

$$P_f \leq P(\bar{C}_1) + P(\bar{C}_2) + \ldots \quad + P(\bar{C}_n) \tag{3}$$

Therefore, if only the first row in the expansion (2) is calculated, the result will be an upper bound approximation. This upper bound becomes a good approximation when the component reliabilities are high. As the components are assumed independent, i.e.,

$$P(\bar{C}_i) = \prod_{j \in C_i} P_{jd} \tag{4}$$

the probability of failure of a system can be obtained when the minimal cut is obtained.

MATHEMATICAL BASIS

When the reliability block diagram is small, the set of minimal cuts can be found by visual examination. In a large network such an examination could be very laborious and perhaps even impossible. Maximum flow-minimum cut algorithm is used to detrmine the minimal cut sets of any network. This algorithm is based on the maximum flow-minimum cut theorem.

Maximum Flow-Minimum Cut Theorem

The theorem states for the following

For all feasible flow pattern of any network the maximal flow value from source S to sink L is equal to the minimal cut capacity of all cuts separating S and L.

Feasible Flows

In this report only feasible flows are dealt with: The following conditions

apply to feasible flows:

I The flow out of the source bus is positive.

II The mismatch of each bus is zero

III The flow out of the load bus (sink) is negative

IV The flow FL on each element is less than or equal to the capacity of this element.

ALGORITHM DESCRIPTION

The algorithm based on this theorem enables us to determine not only the minimal cut elements of a network, but also the maximum flow through this network.

This algorithm consists mainly of two routines, namely, labeling routine and the augmentation routine.

Labeling Routine

The basic idea behind the labeling routine is to identify an augmentation path for the flow through the elements of a network by associating with each particular bus a label that conveys three things:

I The bus number of a labeled bus to which the bus being labeled is connected, starting with the source bus, which is automatically S, + , ∞). The S identifies the bus, the (+) indicates that the flow into the bus can be increased, the (∞) indicates that the amount of flow available to bus S is infinite.

II The flow available to the bus being labeled. The label contains a (+) if the flow can be increased (as in the case of the source bus) and a (-) if the flow can only be decreased.

III The amount of flow into the bus being labeled can be either increased

or decreased. Clearly, this amount depends on the amount of flow available at the labeled bus and the flow-capacity relationship of the element connecting the two buses. Two cases can occur.

1) If the flow through the element connecting the labeled and unlabeled buses being considered say element m, flows from the unlabeled bus j to the labeled bus i indicated by $FL_m(j,i)$, then the amount of flow can be decreased in element (m), FL_m is

$$FL_m = MIN[FB_i, C_m + FL_m(j,i)] \tag{5}$$

where

FB_i is the flow available at bus (i)

C_m is the capacity of element (m)

2) If the flow in element m, $FL_m(i,j)$ is from the labeled bus i to the unlabeled bus j, the amount that the flow can be increased in element m, FL_m is

$$FL_m = MIN[FB_i, C_m - FL_m(i,j)] \tag{6}$$

Given the rules for labeling a bus, the procedure for labeling a graph so as to identify an augmentation path is as follows:

1- Label bus S by $(S, +, \infty)$. S is now labeled and unscanned and all other buses are unlabeled.

2- Select any labeled unscanned bus i (initially S), then:

a) For all unlabeled and unscanned buses j connected to i through element m in which $FL_m(i,j) > 0$, label bus j by $(i, -, FL_m)$

where FL_m is given by equation (5)

Bus j is now labeled but unscanned.

b) For all unlabeled and unscanned buses j connected to i through element m in which $FL_m(i,j) > 0$, label bus j by $(i, +, FL_m)$

where FL_m is given by equation (6).

Bus j is now labeled but unscanned. Bus i now has been scanned.

3- Repeat step 2 until bus L is labeled and unscanned or until no more labels can be assigned and the demand bus L is unlabeled. In the former case, go to augmentation routine (3.4.2), in the latter case terminate the algorithm. The flow is maximum and the set of elements leading from labeled to unlabeled buses is a minimal cut.

In the first case, the augmentation path has been established, the augmentation routine is employed to augment the flow from the source to the sink.

Augmentation Routine

The routine is a methodological procedure using the labeled graph for actually augmenting the flow. The process is started with the sink (demand bus L) and the logic for the routine is:

If the label on the demand bus is $(i, +, FL_m)$, then increase the flow through the elements of the augmenting path by the amount (FL_m). However, if the label is $(i, -, FL_m)$, then decrease the flow through these elements by an amount (FL_m). If the source bus S is reached, erase all labels and return to the labeling routine. The feasible flow pattern used in the labeling routine will consist of the original plus augmental flows. This labeling-augmentation procedure only stops when labeling routine cannot

proceed to label more buses. Hence, the minimal cut sets of any network can be determined by this algorithm.

RELIABILITY INDICES

The probability of system failure can be calculated using equations (3) and (4) as one of the reliability indices of the system.

Also we can determine the loss of load probability (LOLP) and the Demand not served (DNS) of any network as another index of the Reliability by using this algorithm. This can be done as follows:

Given that each element in the system under study can reside in either the (0) state with probability q_n in which it has no capacity and is out of service or the (1) state with probability p_m in which it has capacity C_m and is in service. The system will have 2^E distinct capacity states X_i, $i = 1, \ldots 2^E$ where E is the number of elements. Obviously, the upper and lower limiting states denoted by $\bar{X}$ and $\underline{X}$, within which all other states exist would be state $\bar{X} = (1, 1, \ldots 1)$ and state $\underline{X} = (0, 0, 0, \ldots 0)$. Associated with each of the 2^E states is a probability $f(X_i)$ that it will occur, for example, the probability $f(\bar{X})$ that the system will reside in the upper limiting state is

$$f(\bar{X}) = \prod_{m=1}^{E} P_m$$

Similarly, the probability that the system will reside in the lower limiting state would be

$$f(\underline{X}) = \prod_{m=1}^{E} q_m$$

In general, the probability that the system will reside in any state

$X_i = (V_1, V_2, \ldots V_E)$ is

$$f(X_i) = \prod_{m=1}^{E} f(V_m)$$

where $f(V_m) = P_m$ if $V_m = 1$

$f(V_m) = q_m$ if $V_m = 0$

The problem we face is conceptually simple, but computationally tedious. We must decompose the set X_i, $i = 1, \ldots. 2^E$, of system states into states that are acceptable and states that are unacceptable. Unacceptable states are system capacity states X_i for which the load (LD) cannot be satisfied, either because of insufficient generation capacity or because of insufficient transmission capacity.

The system loss of load probability LOLP is defined by

$$\text{LOLP} = \Sigma\ f(X_i) \text{ for all unacceptable state} \tag{7}$$

Also, if for each unacceptable state X_i, which has a probability $f(X_i)$ of occurance, the amount of load served is SR_i less than LD, then the demand not served for the system would be the sum of the products of demand not served and the probability that the associated state occurred

$$\text{DNS} = \sum_{i=1}^{N} f(X_i)(\text{LD} - SR_i) \text{ for all unacceptable states} \tag{8}$$

where

N = total number of unacceptable states

$(\text{LD} - SR_i)$ = the amount of demand not served because the system capacity state X_i is unacceptable.

Limiting System States

In order to calculate the reliability indices given by equations (7) and (8),we must look for methods of grouping the capacity states into subsets, where each subset will contain capacity having common characteristics to facilitate determining of the information desired. For this purpose, it is desirable to define capacity state, called upper and lower critical capacity states and denoted by S_u and S_L such that any system state X_i is greater or equal to S_u is acceptable and any capacity state X_i is less than S_L is unacceptable. Those capacity states $S_L \leq X_i < S_u$ will be defined as unclassified, meaning that, as given, S_u and S_L are insufficient to ascertain the acceptability of these states. Assume that all acceptable states are grouped into a subset denoted by A, similarly all unacceptable states are defined by subset B . Finally, let the subset of all remaining unclassified states be denoted by u the process must be repeated until all unclassified states are exhausted. After the first classification step, if $f(u) \leq \alpha$, then further classification may be halted on the basis that the probability of the events defined by u taking place is too small to be considered in the planning process. If f(u) is not sufficiently small, exhausting process must continue to exhaust all unclassified states into acceptable or unacceptable states.

Determining The Upper And Lower Critical Capacity States S_u and S_L

To determine the upper critical capacity state, the following procedure is considered

1) Using the maximum flow-minimum cut algorithm, obtain a feasible flow pattern for the network and load profile being considered (FL_m), $m = 1, --- E$.

2) Determine the state values for each element of S_u using the feasible flow l_m as follows:

$$V_{um} = 0 \quad \text{if} \quad FL_m = 0$$
$$V_{um} = 1 \quad \text{if} \quad 0 < FL_m < C_m$$

The lower critical capacity state is determined by establishing a feasible flow pattern in the network for each different single contingency state (the loss of one element only in the network). For contingency i then $V_i = 0$, and the system resides in state $X_i = (V_1, V_2, \ldots, V_m, \ldots, V_E)$ where all V_m are not equal to V_i equal unity. Using the philosophy, if with element i out, $V_i = 0$, the maximum flow through the system is less than the demand then not only is that state unacceptable, but all states in which $V_i = 0$ will be unacceptable. By analyzing one single contingency state, in effect we classify a number of states and avoid complete enumeration. The procedure for determining S_L is as follows:

1- Remove element i from the network

2- Using the maximum flow algorithm, establish a flow pattern in the network.

3- Set the ith element of $S_L = (V_{10}, V_{20}, \ldots V_{i0}, V_{E0})$ as follows:

$$V_{iL} = 1 \quad \text{if SR is less than LD}$$

$$V_{iL} = 0 \quad \text{if SR is equal to LD}$$

4- Augment i $i + 1$ and return to step 1.

Repeat until $i = E$ and stop, since S_L is then completely known.

Then by calculating S_u and S_L we can define acceptable states ($X_i \geq S_u$) and unacceptable states ($X_i < S_L$) and then if $f(u) \leq \alpha$, then we can consider the unacceptable states from the first decomposition and calculate

the reliability indices for the network, otherwise we decompose the unclassified $S_u(u_j)$ and $S_L(u_j)$ and stop decomposition if $f(u) \leq \alpha$.

Report No. 2

COMPUTER ALGORITHM

"TRANSPO"

S. El-Sobki
H. Anis
F. Fouad

Computer Algorithm

"TRANSPO"

This report describes the computer algorithm developed in this study and referred to as "TRANSPO" (Transportation Modelling of Power Systems). The algorithm applies the principles outlined in the foregoing chapter to determine the reliability of a compounded power network in supplying power to a specified load point. The program is tested and its capabilities demonstrated through an executed procedural example power system. The package is fully implemented in the next chapter by applying it to the 220 kV power grid of lower Egypt.

COMPONENTS OF THE ALGORITHM

The computer package TRANSPO is written in FORTRAN language and is composed of two segments, namely main segment and the MAXFL subroutine.

Main Segment

It fulfills the following objectives subsequently

i. Preparation of a full digital description of the grid under study.

ii. Enumeration of all states in which the system may possible reside.

iii. Classification of system states into "acceptable" and "unacceptable". This is done through the determination of the upper and lower limiting states.

iv. Evaluation of the loss of load probability "LOLP" and the demand not served "DNS".

Subroutine MAXFL

It applies the maximum flow-minimum cut set theory to determine the maximum possible supply of power to the load and to find the corresponding minimum cut set for each state of the system.

LIST OF SYMBOLS

N	Number of buses (nodes)
IELE	Number of actual elements of the network
IPATH	Number of all existing paths to the different nodes taken one at a time and without duplication at the source and load bus.
IBS	Source bus number
NDB	Actual demand bus number
IVU	Array describing the upper state values
IVL	Array describing the lower state values
ISTAT	Array describing any possible state of the system
PRST	Probability of occurrence of any possible state
PLOSS	Loss of load of any unacceptable state
FORC	Array contains forced outage rates of all the elements of the network
ALOLP	Loss of load probability of any power system
DNS	Demand not served of any power grid in per unit
NB	Matrix containing number of buses of the given grid
FB	Amount of flow available at each bus
LAB	Array containing index of buses being labeled
K	Array containing index of considered paths during labeling process
NCH	Array containing index of all possible paths
J	Counter for labeled buses

JJ Counter for all possible paths

IX Counter for possible paths where the buses at their ends can be labeled

IY Counter for possible paths where the buses at their ends are not yet labeled in addition to fulfilling the previous condition.

IEND Indicator to demonstrate whether the demand bus is labeled or not during labeling process.

MCUT Counter for minimum cut links

INPUT DATA

The presented package accepts for study as any electric power network, typically composed of buses (nodes) and elements (links). The bus may be a load bus, a power station bus or both. A link in this study is understood to be a transmission line. The data required to run the algorithm on computer are the following:-

i. The power-carrying capacity of the transmission lines in per unit.

ii. The capacity of the generating stations in per unit.

iii. The outage rates of the transmission lines and the generating stations.

iv. The peak load demand at any point on the network in per unit.

DATA PROCESSING

In an example procedural network, shown in fig (1), the stage which the data processing undergoes will be demonstrated as follows:

i. All buses of the network are numbered

ii. A dummy source bus is created. The capacity of the links between this bus and the generation buses are in fact the capacities of the generating stations.

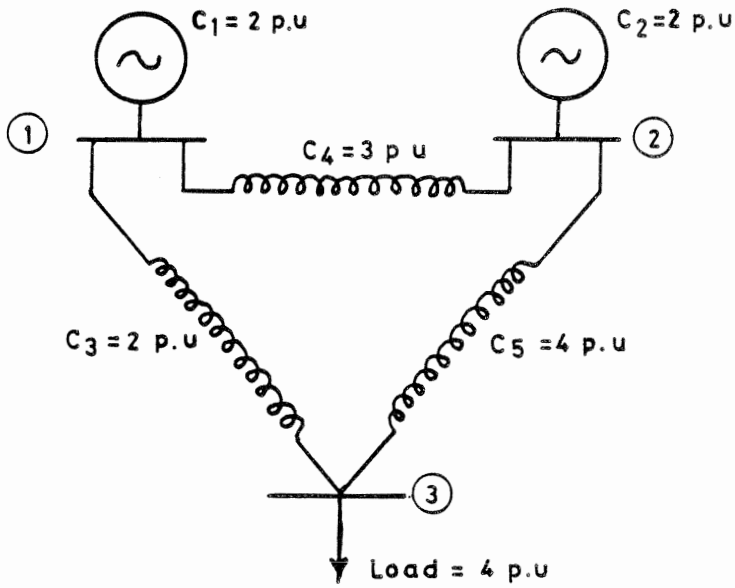

Fig. (1) Three-bus system

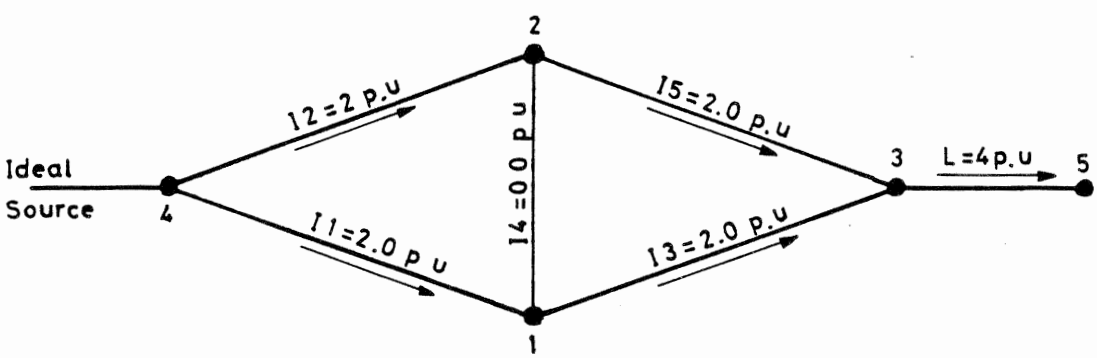

Fig. (2) Feasible flow pattern for three bus system

4	4	1	1	2	2	3
1	2	3	2	1	3	5
2.	2.	2.	3.	3.	4.	4.
0.	0.	0.	0.	0.	0.	0.

Fig. (3) Matrix CPF

iii. A dummy load bus is created which connects the network to the true load. The capacity of the dummy link between the actual demand bus and the dummy demand bus is equated to the value of the load required to be fed.

iv. The capacity of the link connecting a pair of actual buses is the power-carrying capacity of that link (transmission line).

In applying these steps on the three bus system shown in fig (1), buses (1) and (2) represent the two generating stations.

The network is assumed to feed a certain load of value 4 p.u. represented by bus (3), as shown in fig. (2). The dummy source bus is bus (4). The capacities of the links 4-1, 4-2 C1 and C2 represent the capacities of the generating stations, their value are identical and equal to 2 p.u. The dummy load bus is bus (5). The capacity of the link 3-5 is equal four per unit (the value of the load). There are three transmission lines in the shown grid as follows:

The line C3 is between bus (1) and bus (3) and its capacity equals to two per unit.

The line C4 is between bus (1) and bus (2) and its capacity equals to three per unit.

The line C5 is between bus (2) and bus (3) and its capacity equals to four per unit.

System Description

* A matrix (CPF) is constructed which has a dimension (4,IPATH), IPATH being the number of all existing paths to the different nodes taken one at a time and without duplication at the source and load buses.

  In the shown example CPF is a (4X7) matrix as demonstrated by fig. (3). The first and second rows describe pairs of buses, while the third row

describes the corresponding capacity. The fourth row contains the calculated instantaneous value of flow through this path, initially the fourth row of the matrix is full of zeros.

* An array (FORC) is constructed whose dimension is equal to the number of elements in the network (IELE) and contains the value of forced outage rate of each element whether it is a generator or a transmission line. In the shown example, FORC is assumed to be the following value : 0.0005, 0.0056, 0.0059, 0.0088, 0.0044.
* An array (KH) is constructed whose dimension is IPATH and it assigns numbers, on one-to-one correspondence basis, to all links defined in CPF. The values of KH in the shown example are 1,2,3,4,4,5,6.

EXECUTION OF MAIN SEGMENT

Referring to the flow chart of fig. (4), the main segment is found to proceed as follows:-

I) Using the MAXFL subroutine, obtain a feasible flow pattern for the network.

II) A matrix CPFL is formed with dimension (4,IEL) whose columns represent the elements of the network instead of paths as in CPF. It represents the elements of the grid plus the dummy element, i.e., IEL = IELE + 1.

III) The upper limiting state (IVU) is deternimed as follows:

IVU (I) = 0 if CPFL (4,I) = 0

IVU (I) = 1 if CPFL (4,I) > 0

and CPFL (4,I) ≤ CPFL (3,I)

for all values of I between 1, and IELE

IVU in the example is calculated and equals to 1,1,1,0,1.

IV) The lower limiting state (IVL) is determined as follows:-

a- Remove element i from the network.

b- Call the maximum flow subroutine MAXFL to establish a new flow pattern in the network.

c- IVL (I) = 1 if CPFL (4,IEL) < CPFL (3,IEL)

IVL (I) = 0 if CPFL (4,IEL) = CPFL (3,IEL)

where

CPFL (3,IEL) is the value of the load to be satisfied by the network and CPFL (4,IEL) is the final calculated value of flow.

d- Restore the initial values of the capacities of all the elements of the network in the third row of the Matrix (CPF) and restore the initial value of flow which is zero in the fourth row of the Matrix (CPF)

e- Increase i $\rightarrow$ i + 1 and return to step (a) repeat until i = IELE and stop when the value of (IVL) is completely known. IVL in the example is calculated and equals to 1,1,0,0,1.

V) Generate all the possible states of the network one at a time, classify each state ISTAT to be unacceptable, acceptable or unclassified. According to the following formulae ISTAT is acceptable state

if ISTAT (J) $\geq$ IVU (J)

ISTAT is unacceptable state

if ISTAT (J) < IVL (J)

ISTAT is unclassified state

if ISTAT (J) < IVU (J)

and ISTAT (J) $\geq$ IVL (J)

* In the shown example, there are thirty-two possible states for the system, twenty-eight unacceptable states, two unclassified states and the last two are acceptable states.

VI For each unacceptable state:

a- Remove the elements which are out of service by equating their capacities to zero in the Matrix CPF.

b- Call the maximum flow subroutine MAXFL to obtain the maximum power to be fed to the load. Calculate the loss of load in this state "PLOSS" according to the following formula:

PLOSS = CPF (3,IPATH) - CPF (4,IPATH)

VII- The probability of occurrence of an unacceptable state (PRST) is the product

$$PRST = \pi_i \, FORC_I \, \pi_J \, (1 - FORC_j)$$

where i includes all elements out of service in this state and j represents all other operating elements.

VIII- The loss of load probability of the system (ALOLP) is equal to the summation of the probability of all unacceptable states.

$$ALOLP = \sum_{\substack{\text{for all} \\ \text{unacceptable} \\ \text{state}}} PRST$$

The demand not served (DNS) is equal to the summation of the product of the probability of each state by the loss of load in this state for each unacceptable state.

$$DNS = \sum_{\substack{\text{for all} \\ \text{unacceptable} \\ \text{state}}} PRST * PLOSS$$

In the shown example, ALOLP = 0.01 & DNS = 0.021

EXECUTION OF SUBROUTINE MAXFL

This segment applies the maximum flow-minimum cut set theory to calculate the maximum power that can be delivered to the load (sink) under a given system configuration. It performs three operations in succession, namely, the labeling process, the augmentation process and finally the identification of the minimum cut set.

Labeling Process

Labeling process is systematic search for a flow augmenting path from an ideal source bus (IBS) to the demand bus (NBD). This search is done in the MAXFL segment as follows:

I) Starting from the ideal source bus IBS, determine all the possible paths for flow at each bus and store the index of these paths in array (NCH) wiht length JJ.

II) Selecting those paths which the buses at their ends can be labeled, i.e., their capacities are greater than the flow passing in them. That is to say restore only the index of paths which fulfills this condition.

$$CPF\ (3,NCH\ (I)) > CPF\ (4,NCH\ (I))$$

in the same array by counter

$$IX \leq JJ$$

terminate the algorithm when the labeling process cannot proceed more, i.e., if $IX = 0$

III) Selecting those paths which the buses at their ends are not yet labeled, because in identifying an augmentation path, each bus is to be examined at most one. That is to say restore only the index of paths which fulfills the condition.

NB(2,NCH(I)) $\neq$ LAB(II)

in the same array NCH with counter IY < IX

where

NB is a matrix containing the bus number as, the first two rows of the Matrix CPF.

LAB is an array containing the index of buses being labeled, and

$1 \leq II \leq J$, and

J is the number of labeled buses, and

$1 \leq I \leq IX$

The algorithm is terminated when the labeling process cannot proceed further, i.e.,

if IY = 0

IV) Checking whether labeling process has reached the demand bus or not, i.e.,

NB(2,NCH(I)) = NDB

$1 < I < IY$

V) If the labeling process does not reach the demand bus, then label the buses at the end of the paths which fulfill all the previous conditions, according to the following formula

FB(NB(2,II)) = MIN [FB(NB(1,II)),(CPF(3,II) - CPF(4,II))]

where FB is an array which contains the amount of flow available at each bus, and II is the index of the considered paths

$i \leq II \leq IX$

VI) Return to step I, until the demand bus is finally labeled and the augmentation path is completely identified.

Augmentation Process

This operation uses the results of the labeling process to evaluate new values for the flow through the different elements. It must be followed by another labeling process, except when the load is readily satisfied.

Augmentation runs along the following steps:

I) Erase all labels previously assigned to the buses, i.e.,

set LAB(I) = 0 for $1 \leq I \leq J$

II) Augment the flow through the augmentation path by the amount of flow available at the demand bus.

That is

CPF(4,K(J)) = CPF(4,K(J)) + FB [NB(2,IPATM)]

where

K is an array containing index of considered paths during labeling process

III) Decrease J by one, and return to step II until the source bus is reached

NB(1,K(J)) = IBS

then return to the labeling process step I in 4.6.1

The new feasible flow pattern is then used in the relabeling process. The two processes are repeated until the labeling process cannot proceed, or the value of load is readily satisfied.

Processes 4.6.1 and 4.6.2 are then terminated.

Minimum Cut Set Identification

The maximum flow-minimum cut set theory states that the minimum cut set elements are those connecting labeled and unlabeled buses after the labeling process has been exhausted. The algorithm to apply this fact and determine the

minimum cut set elements is as follows:

I) Transform CPF Matrix into CPFL Matrix using KH array to reach the actual elements of the network

II) Scan all the buses of the actual network which are stored in the first two rows in the Matrix CPFL. A condition for the element connecting NB(1,I) and NB(2,I) to be a minimum cut element is that

NB(1,I) = LAB(II) and

NB(2,L) $\neq$ LAB(II)

$1 \geqslant I \geqslant IELE$

$1 \geqslant II \geqslant J$

As the maximum flow-minimum cut set theory states, that the sum of capacities of all minimum cut elements is equal to the maximum flow at the load bus.

BLOCK DIAGRAM OF TRANSPO

Calculate the upper limining state IVU by using MAXFL subroutine
Calculate the lower limining state IVL by using MAXFL subroutine as many times as the number of elements of the system
Generate all the possible states of the system and classify them into acceptable, unacceptable and unclassified states.
For each unacceptable state, calculate the loss of load in that state "PLOSS" using MAXFL subroutine
Calculate the probability of occurrence of that unacceptable state PRST using the forced outage rates of all the elements of the system.
Determine the loss of load probability of the system ALOLP and the demand not served (DNS) according to the following formula ALOLP = Σ PRST DNS = Σ PRST * PLOSS

Fig. (4)

Application of a Transportation Model
to Composite System Reliability [TRANSPO]

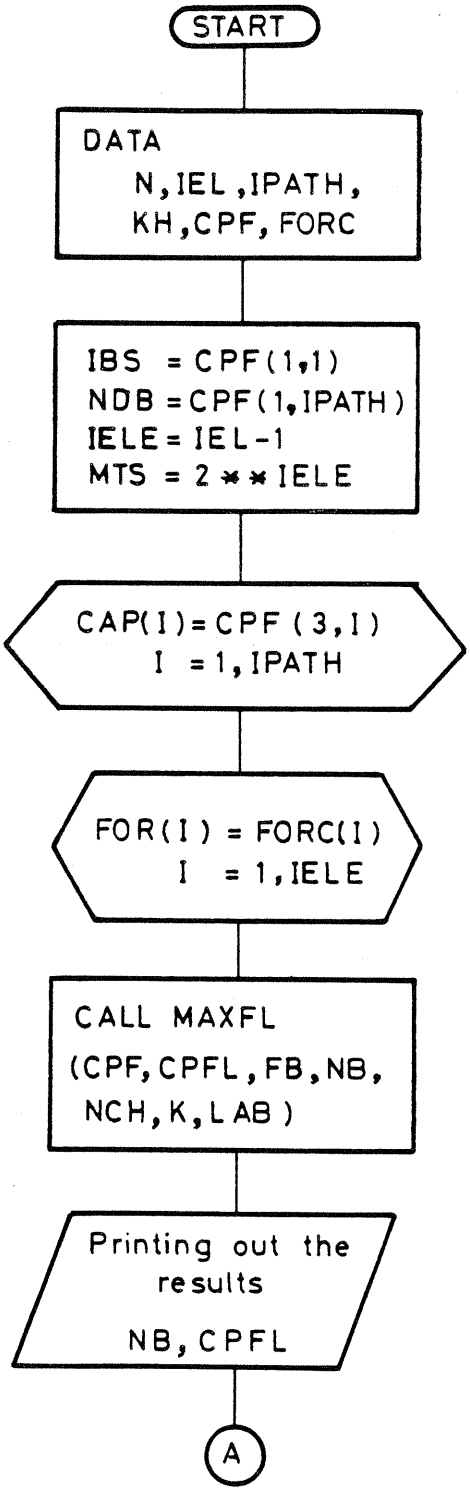

Evaluate upper limitting state

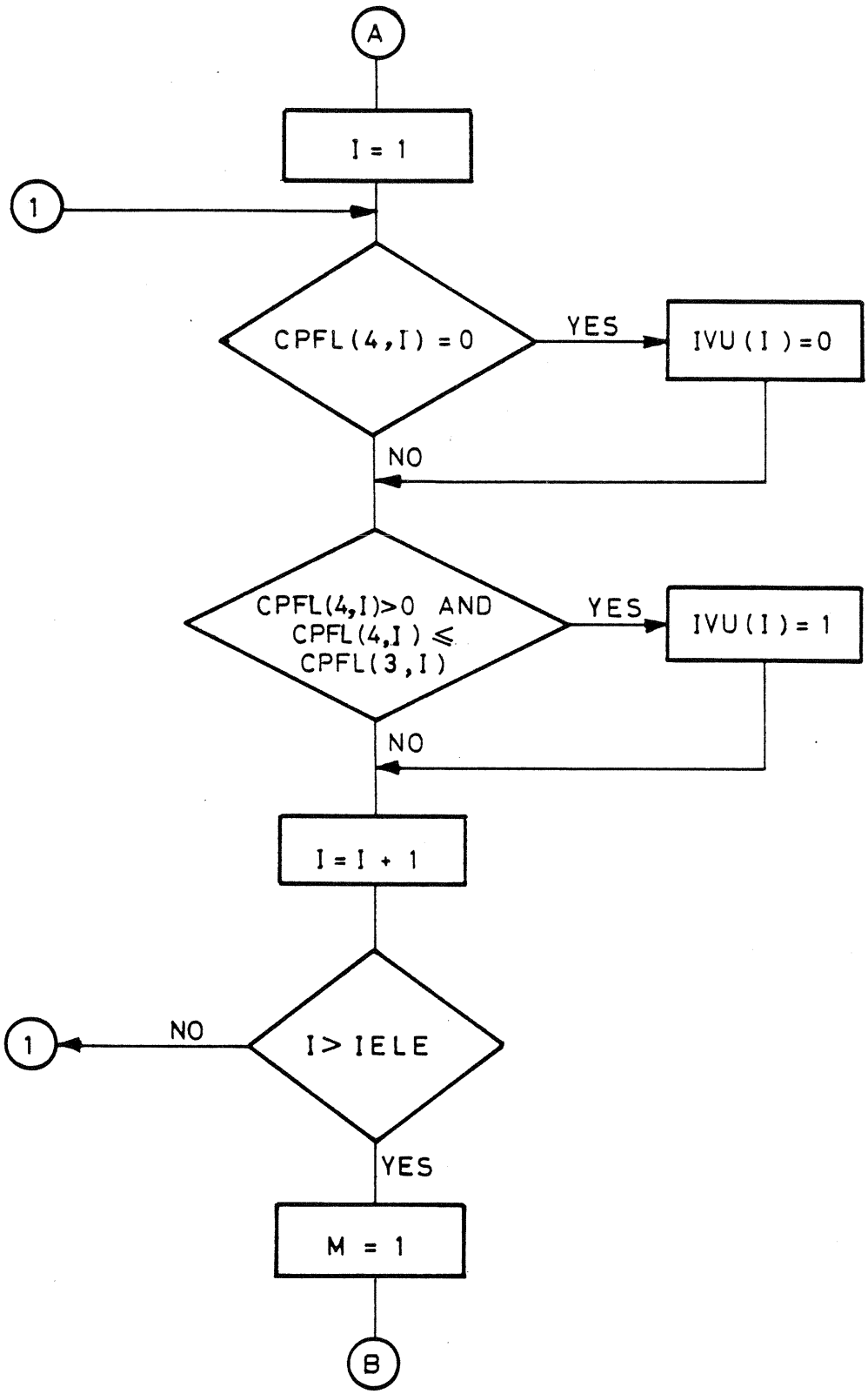

Evaluate lower limitting state

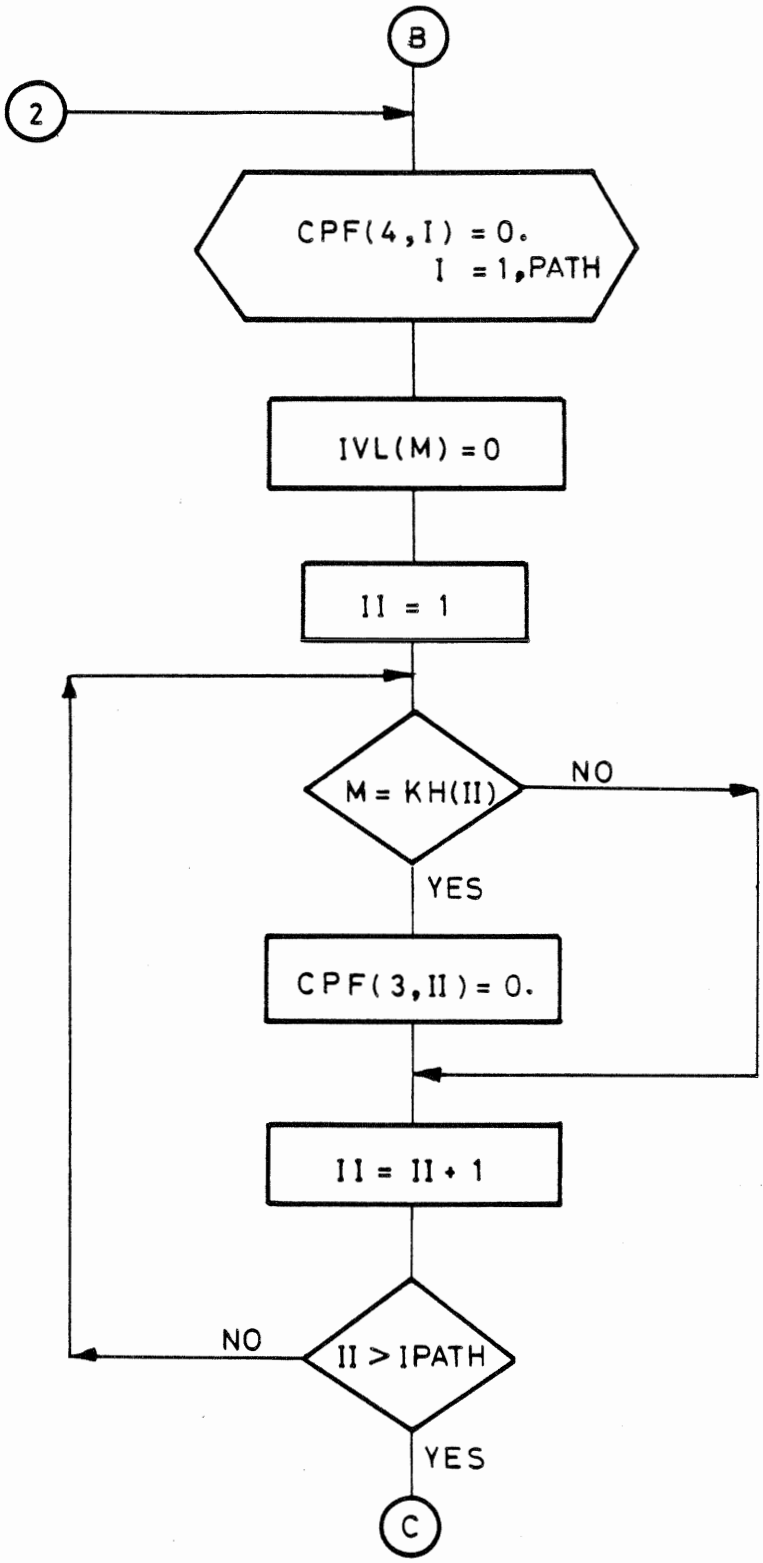

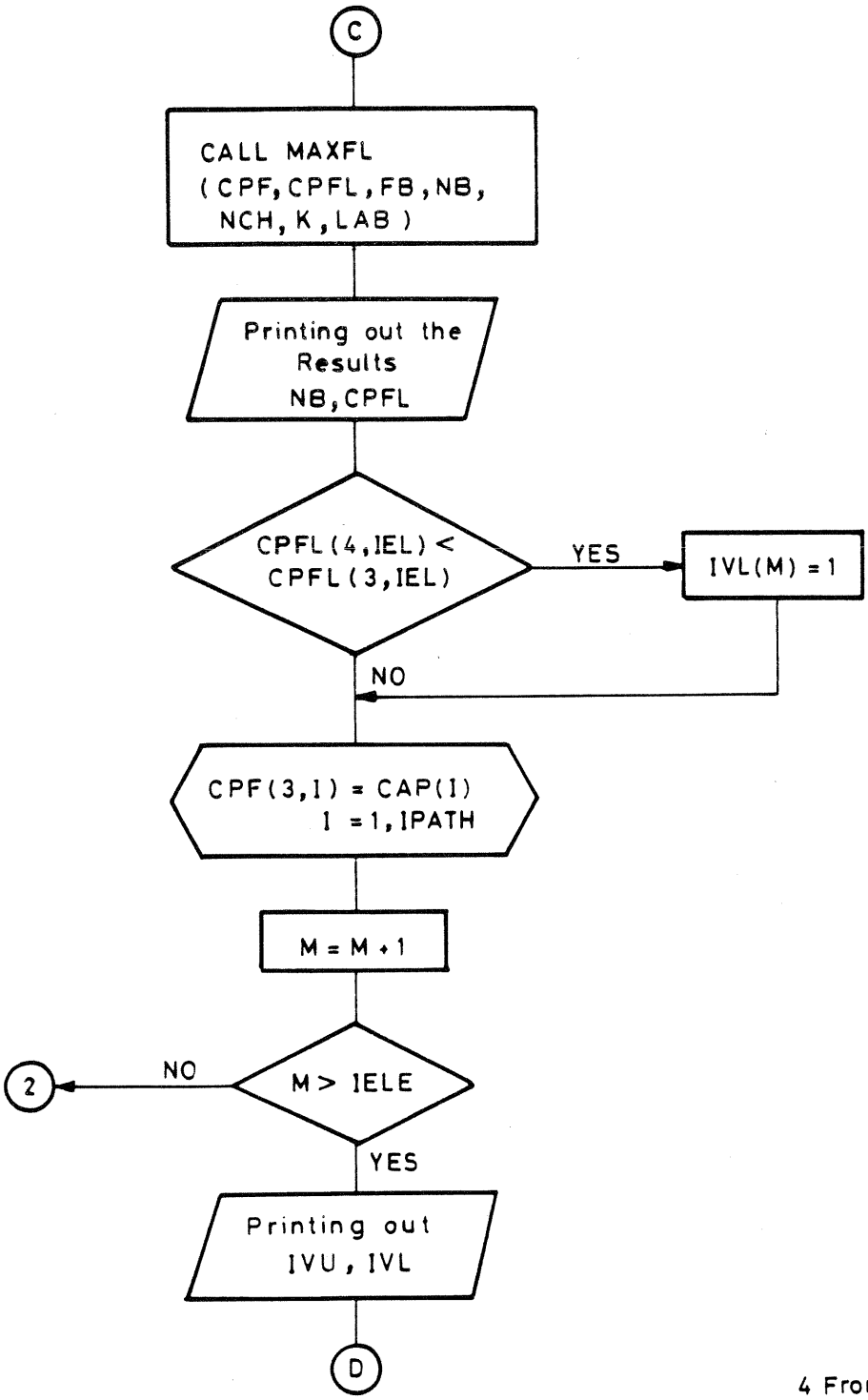
C
CALL MAXFL
(CPF,CPFL,FB,NB,
NCH,K,LAB)
Printing out the
Results
NB,CPFL
CPFL(4,IEL) <
CPFL(3,IEL)
YES
IVL(M) = 1
NO
CPF(3,I) = CAP(I)
I = 1,IPATH
M = M + 1
M > IELE
NO
2
YES
Printing out
IVU, IVL
D

4 From 17

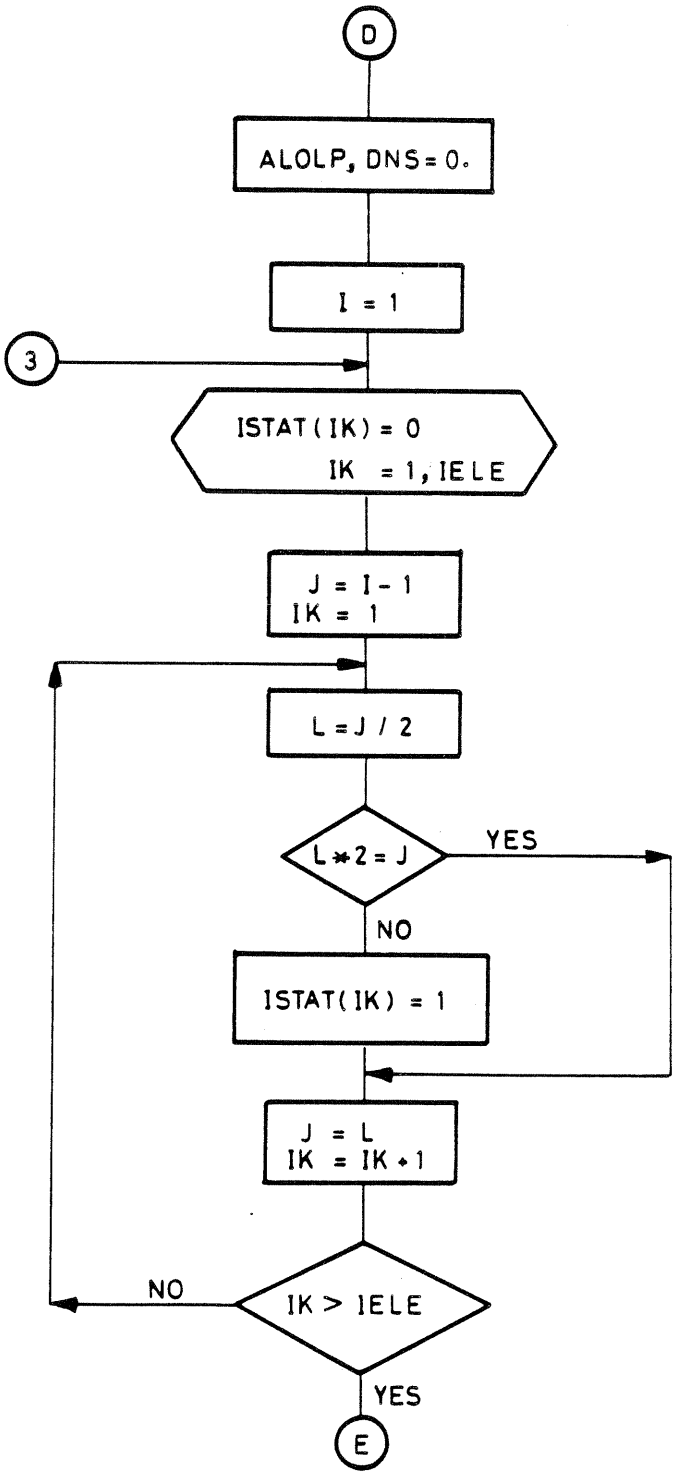
D
ALOLP, DNS = 0.
I = 1
3
ISTAT(IK) = 0
IK = 1, IELE
J = I - 1
IK = 1
L = J / 2
L*2 = J
YES
NO
ISTAT(IK) = 1
J = L
IK = IK + 1
NO
IK > IELE
YES
E

5 From 17

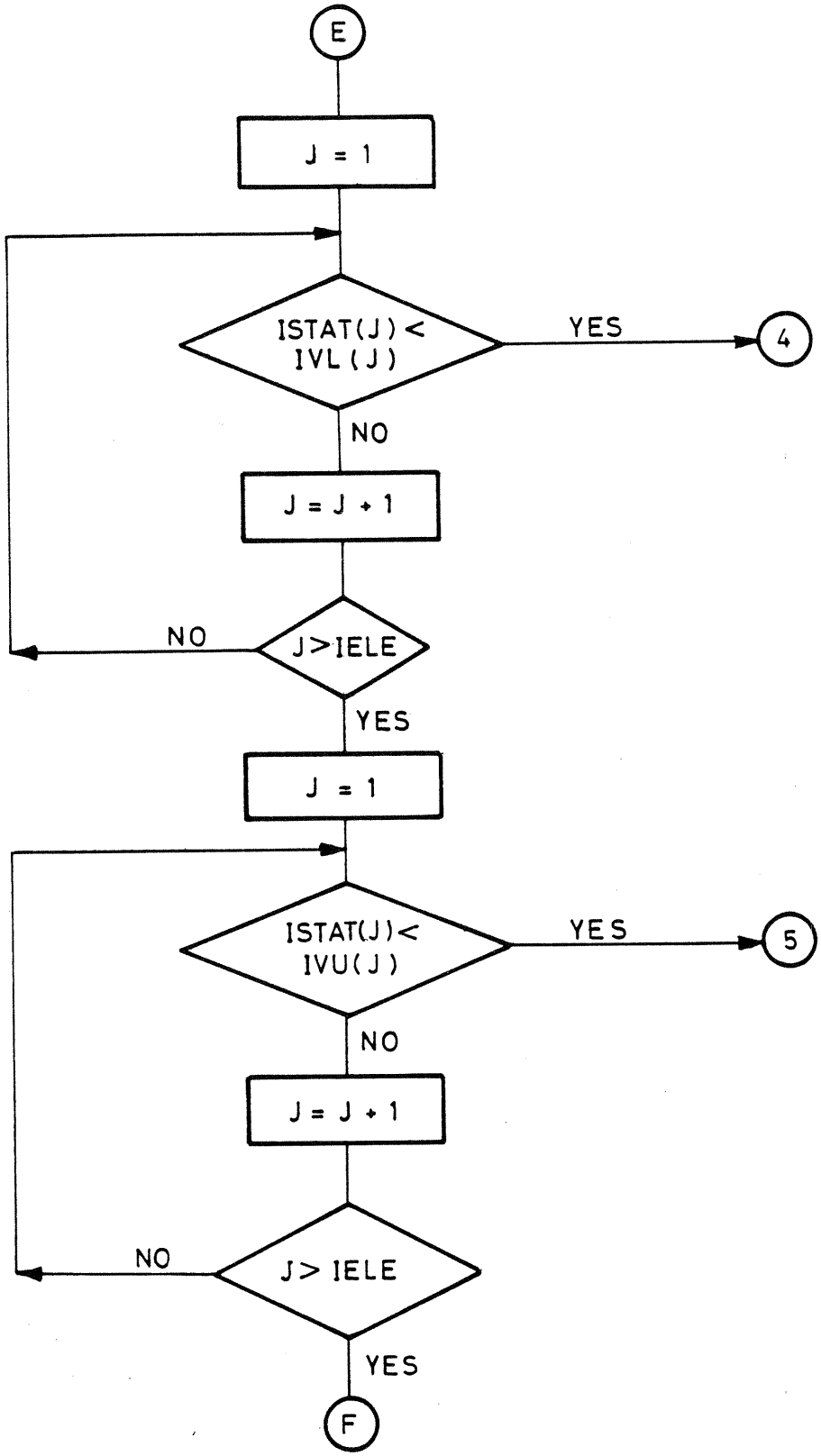
E
J = 1
ISTAT(J) <
IVL(J)
YES
4
NO
J = J + 1
NO
J > IELE
YES
J = 1
ISTAT(J) <
IVU(J)
YES
5
NO
J = J + 1
NO
J > IELE
YES
F

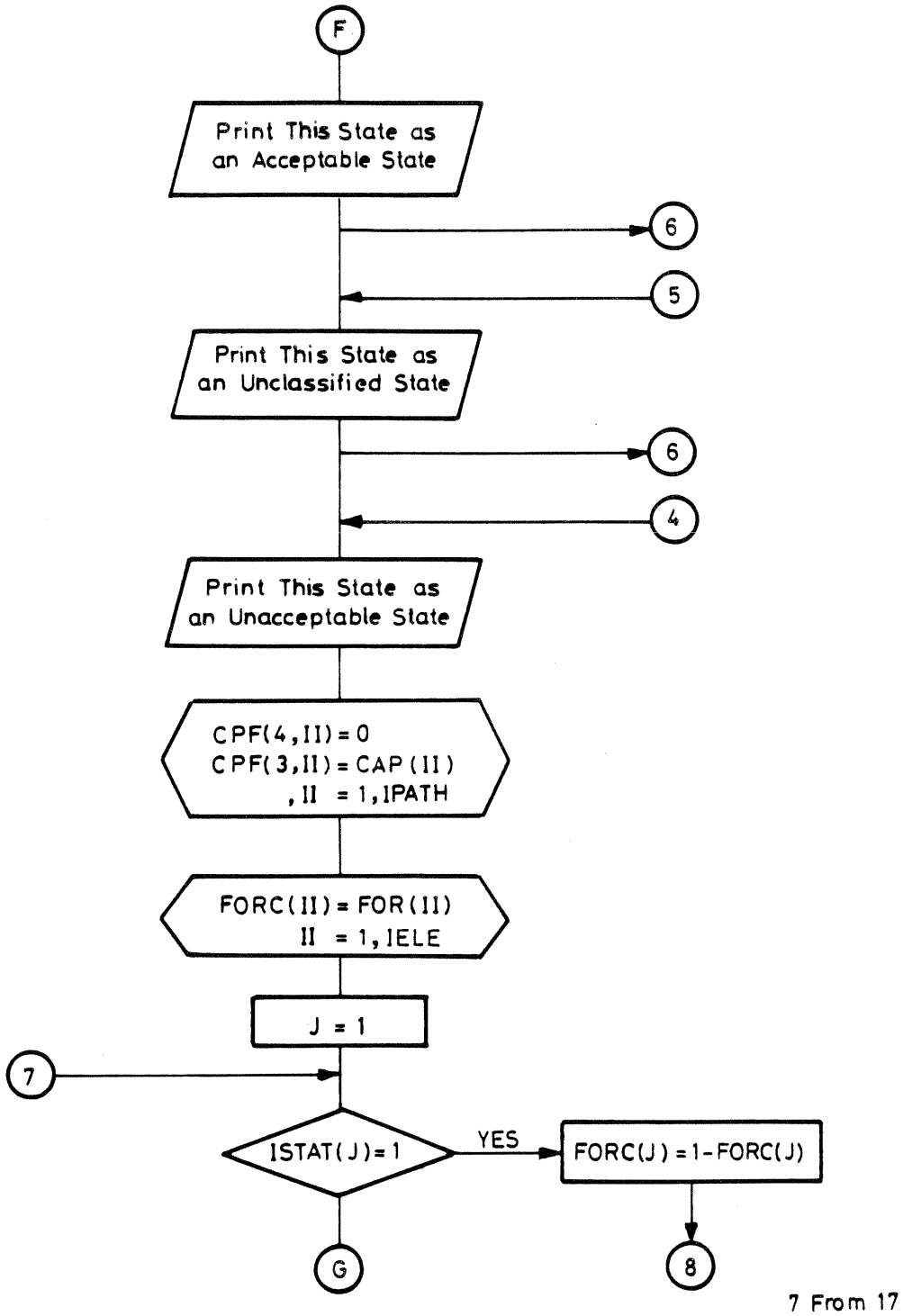
F
Print This State as an Acceptable State
6
5
Print This State as an Unclassified State
6
4
Print This State as an Unacceptable State
CPF(4,II) = 0
CPF(3,II) = CAP(II)
, II = 1,IPATH
FORC(II) = FOR(II)
II = 1,IELE
J = 1
7
ISTAT(J) = 1
YES
FORC(J) = 1-FORC(J)
G
8

7 From 17

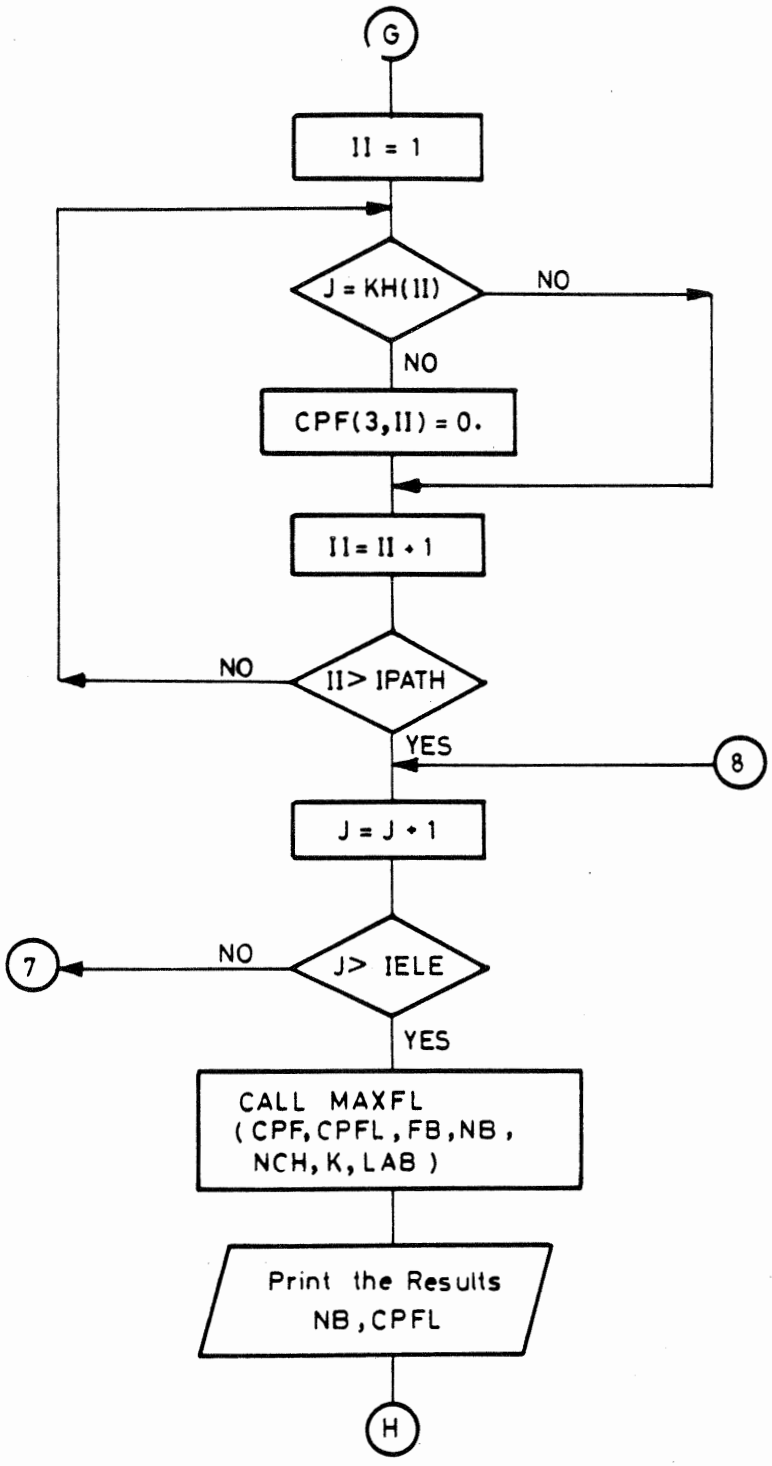
G
II = 1
J = KH(II)
NO
NO
CPF(3,II) = 0.
II = II + 1
NO
II > IPATH
YES
8
J = J + 1
7
NO
J > IELE
YES
CALL MAXFL
(CPF, CPFL , FB , NB ,
NCH, K, LAB)
Print the Results
NB , CPFL
H

8 From 17

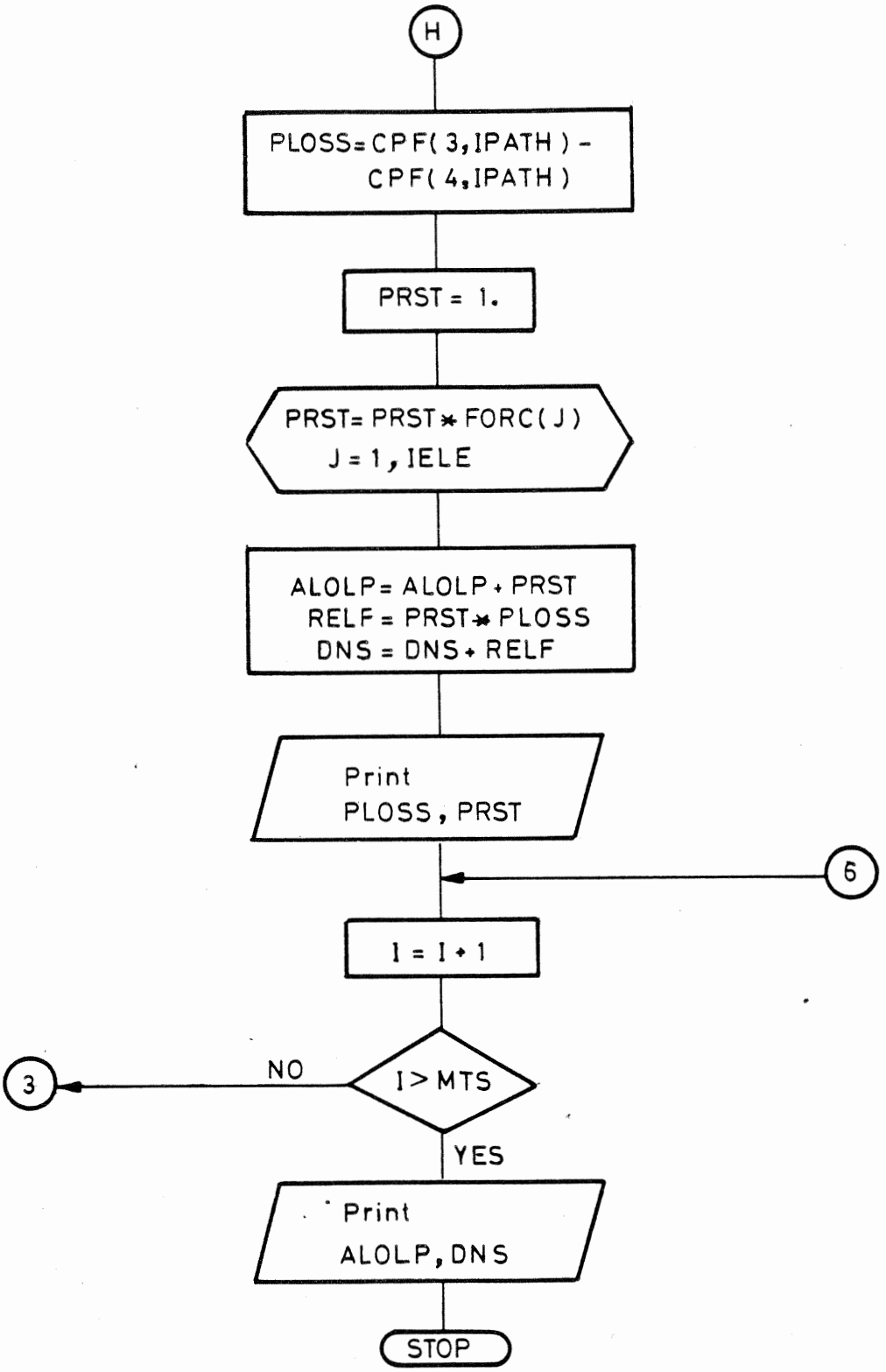
H
PLOSS=CPF(3,IPATH) -
CPF(4,IPATH)
PRST = 1.
PRST= PRST * FORC(J)
J = 1, IELE
ALOLP= ALOLP + PRST
RELF = PRST * PLOSS
DNS = DNS + RELF
Print
PLOSS, PRST
6
I = I + 1
I > MTS
NO
3
YES
Print
ALOLP, DNS
STOP

SUBROUTINE MAXFL

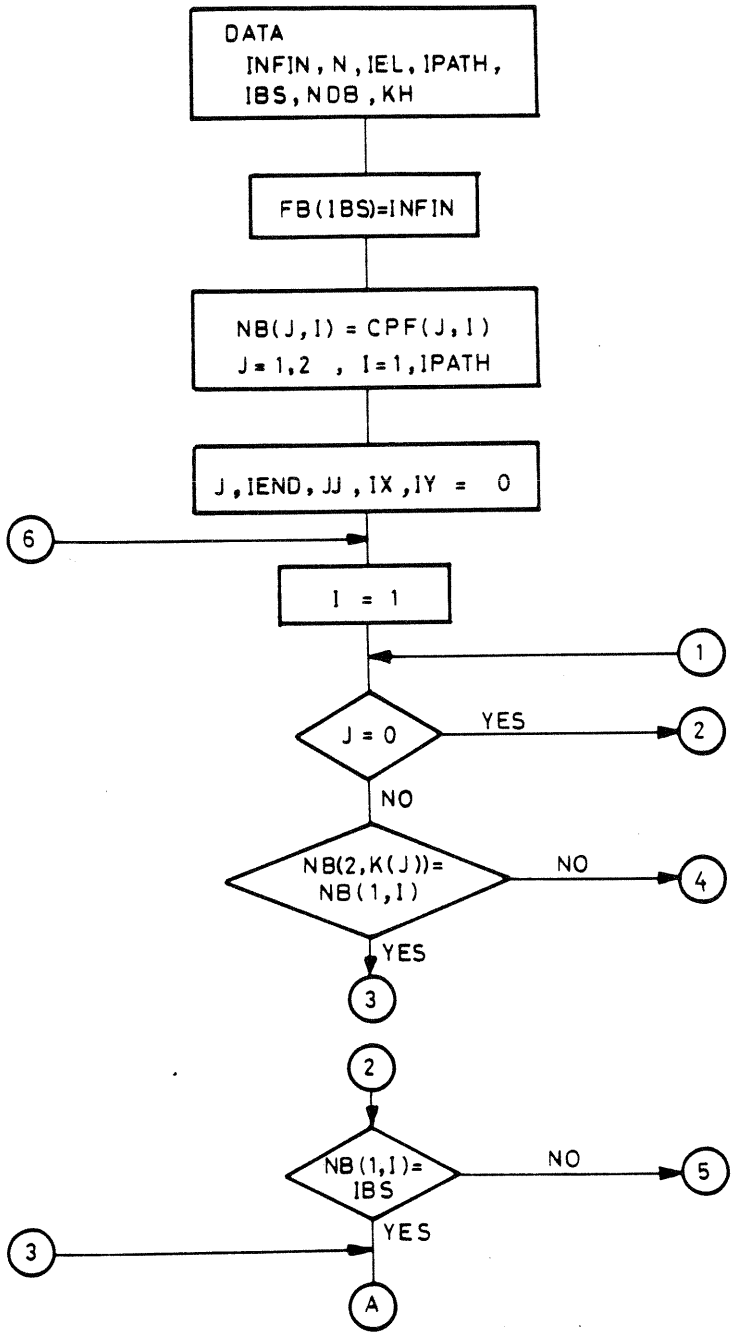

10 From 17

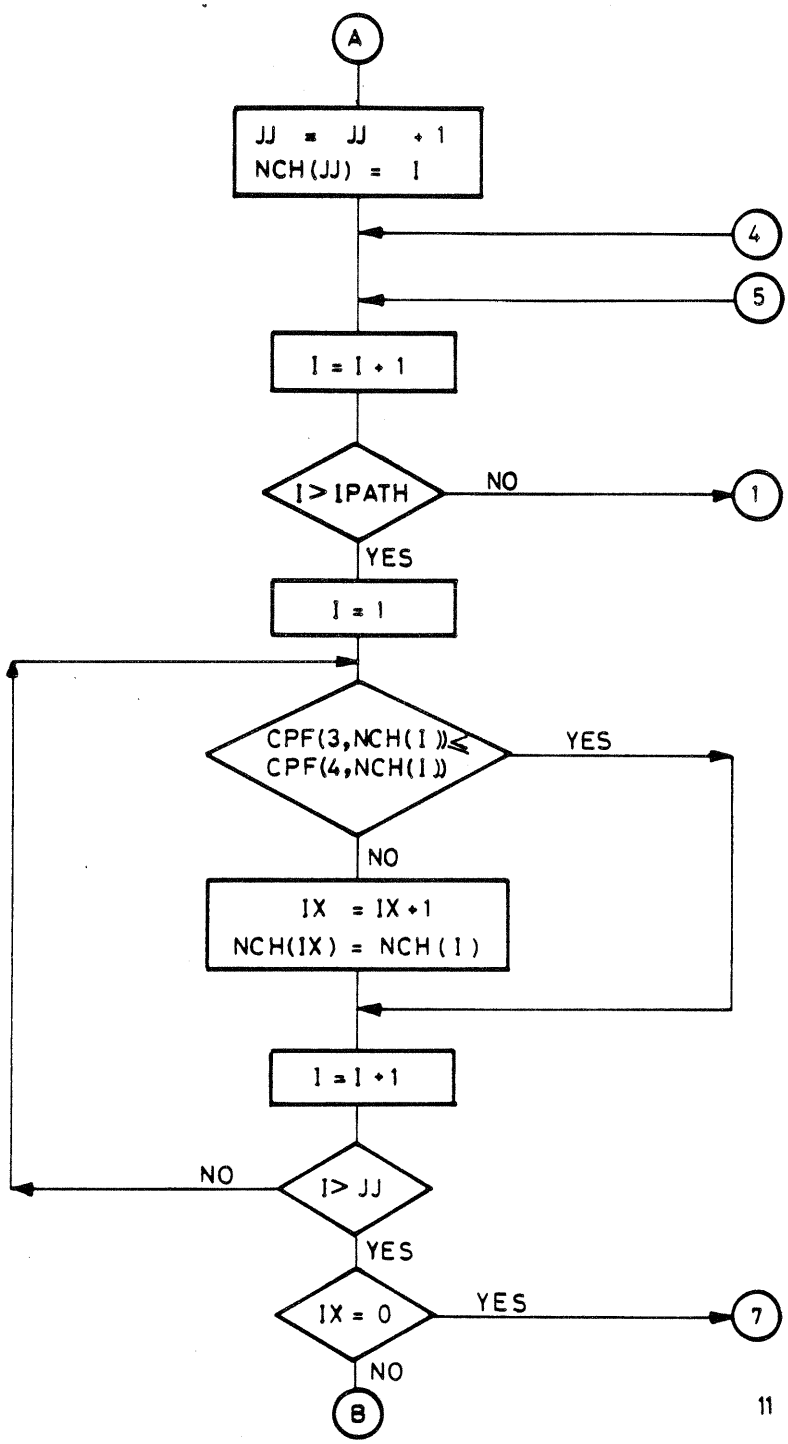
A
JJ = JJ + 1
NCH(JJ) = I
4
5
I = I + 1
I > IPATH
NO
1
YES
I = 1
CPF(3,NCH(I)) ≤ CPF(4,NCH(I))
YES
NO
IX = IX + 1
NCH(IX) = NCH(I)
I = I + 1
NO
I > JJ
YES
IX = 0
YES
7
NO
8

11 From 17

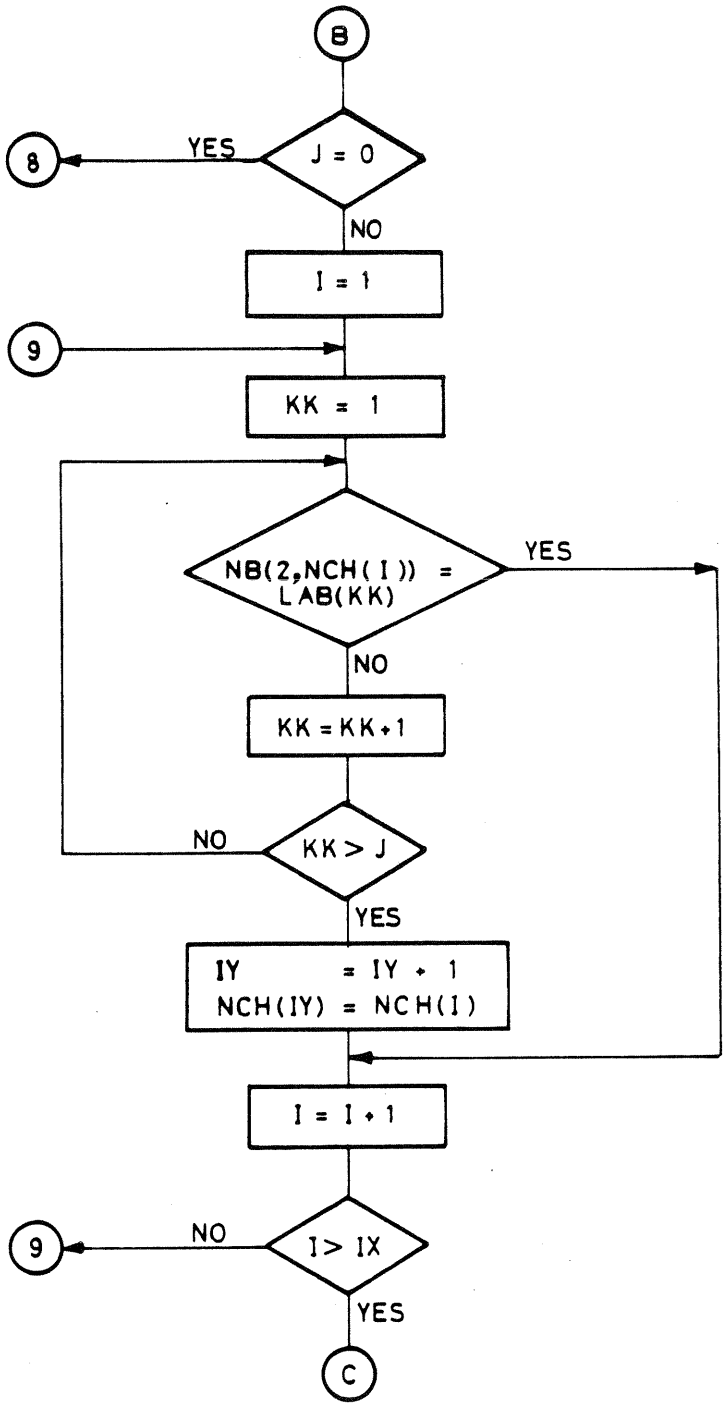
B
J = 0
YES
8
NO
I = 1
9
KK = 1
NB(2,NCH(I)) =
LAB(KK)
YES
NO
KK = KK+1
KK > J
NO
YES
IY = IY + 1
NCH(IY) = NCH(I)
I = I + 1
I > IX
NO
9
YES
C

12 From 17

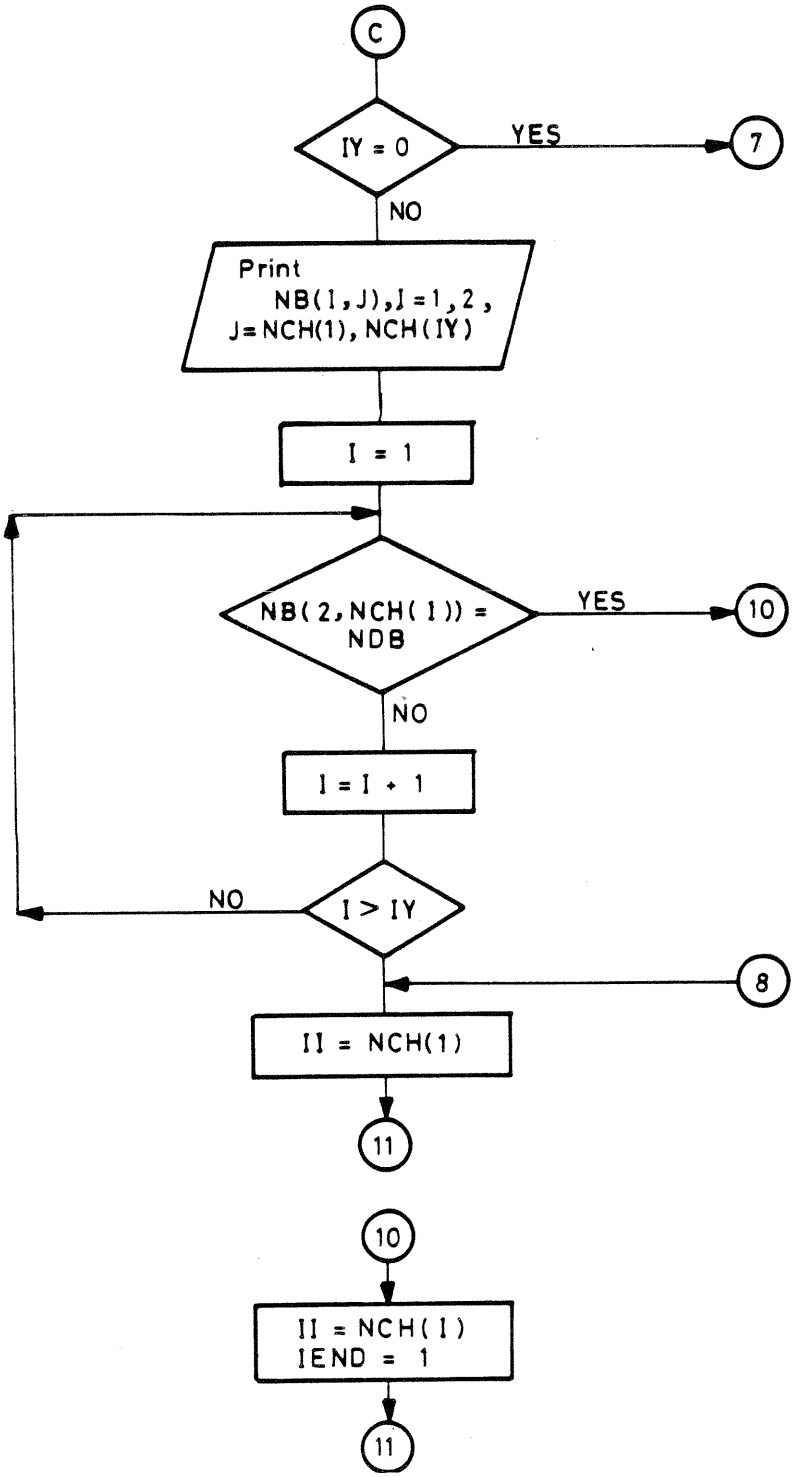
C
IY = 0
YES
7
NO
Print
NB(I,J),J=1,2,
J=NCH(1), NCH(IY)
I = 1
NB(2,NCH(I)) =
NDB
YES
10
NO
I = I + 1
NO
I > IY
8
II = NCH(1)
11
10
II = NCH(I)
IEND = 1
11

13 From 17

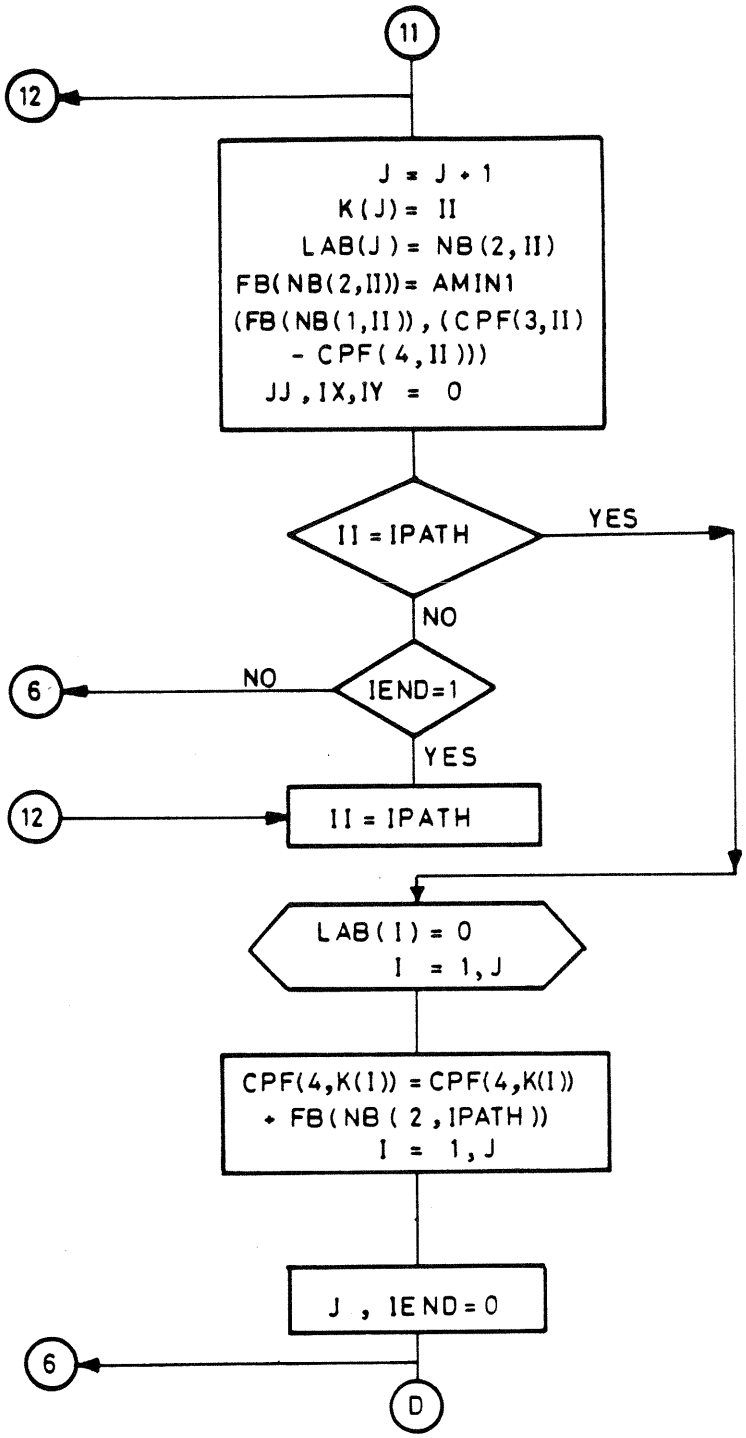
11
12
J = J + 1
K(J) = II
LAB(J) = NB(2,II)
FB(NB(2,II)) = AMIN1
(FB(NB(1,II)),(CPF(3,II)
- CPF(4,II)))
JJ,IX,IY = 0
II = IPATH
YES
NO
6
NO
IEND=1
YES
12
II = IPATH
LAB(I) = 0
I = 1,J
CPF(4,K(I)) = CPF(4,K(I))
+ FB(NB(2,IPATH))
I = 1,J
J , IEND=0
6
D

14 From 17

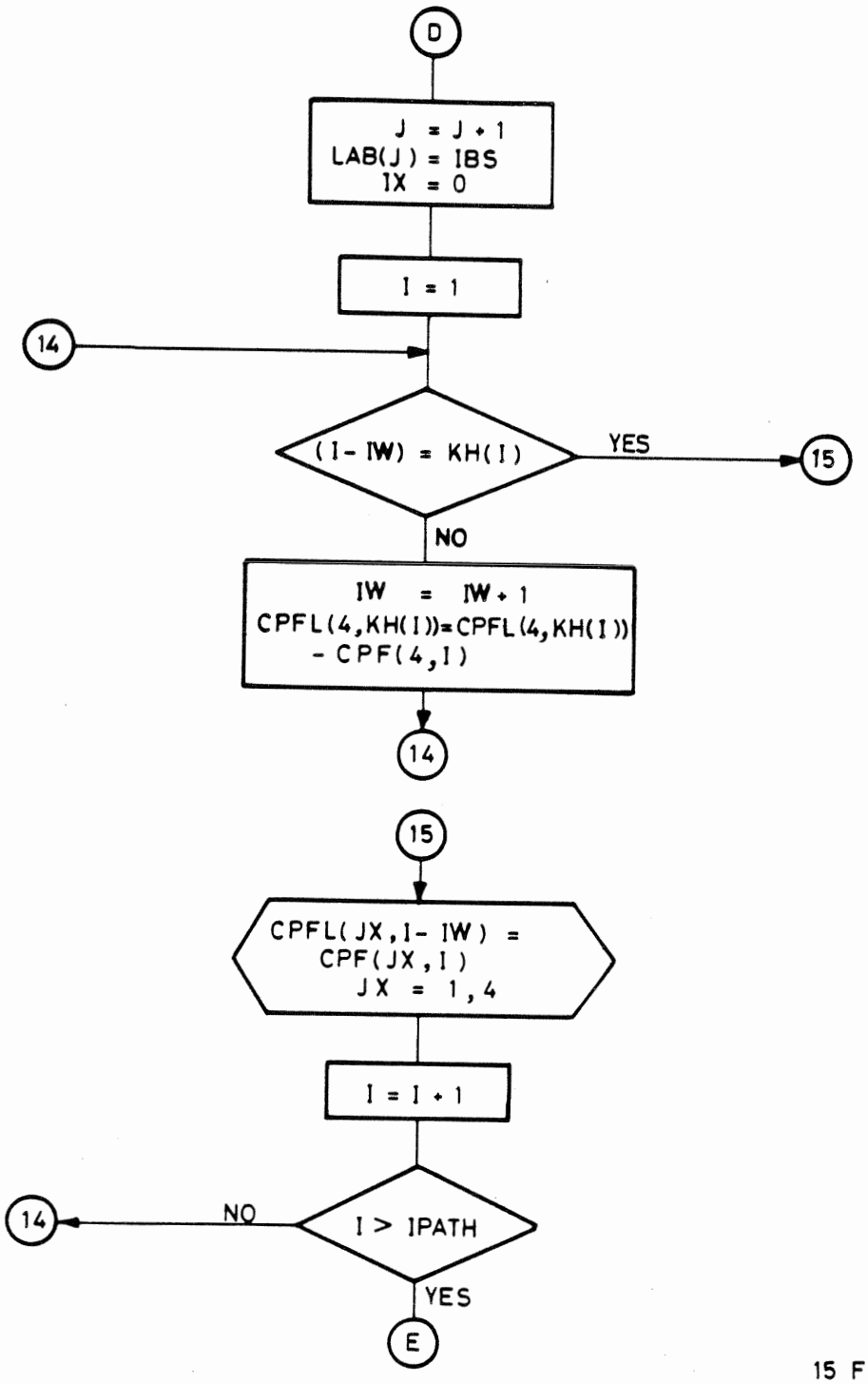
D
J = J + 1
LAB(J) = IBS
IX = 0
I = 1
14
(I - IW) = KH(I)
YES
15
NO
IW = IW + 1
CPFL(4,KH(I))=CPFL(4,KH(I))
- CPF(4,I)
14
15
CPFL(JX,I- IW) =
CPF(JX,I)
JX = 1,4
I = I + 1
14
NO
I > IPATH
YES
E

15 From 17

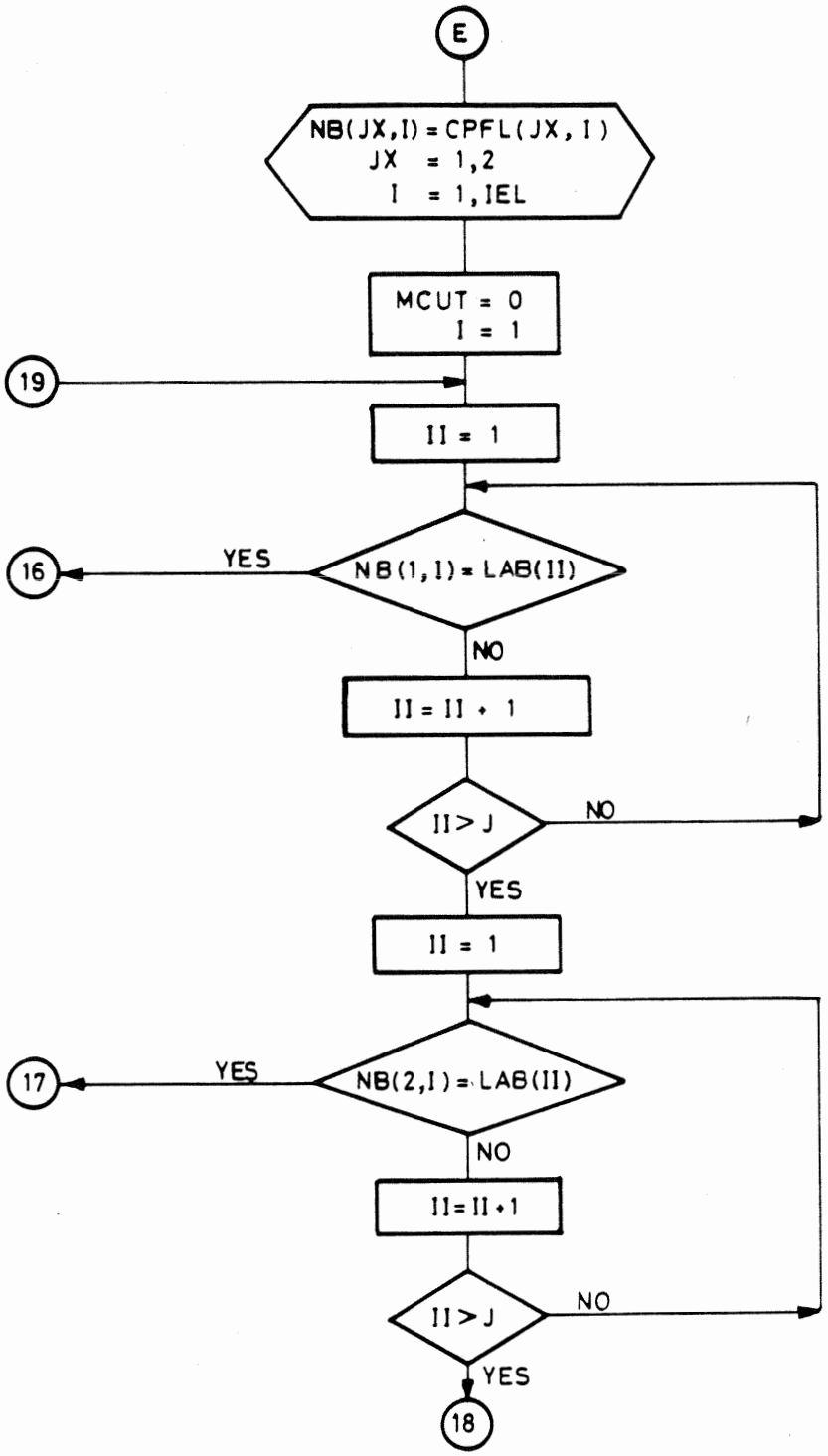
E
NB(JX,I) = CPFL(JX, I)
JX = 1,2
I = 1,IEL
MCUT = 0
I = 1
19
II = 1
16
YES
NB(1,I) = LAB(II)
NO
II = II + 1
II > J
NO
YES
II = 1
17
YES
NB(2,I) = LAB(II)
NO
II = II + 1
II > J
NO
YES
18

16 From 17

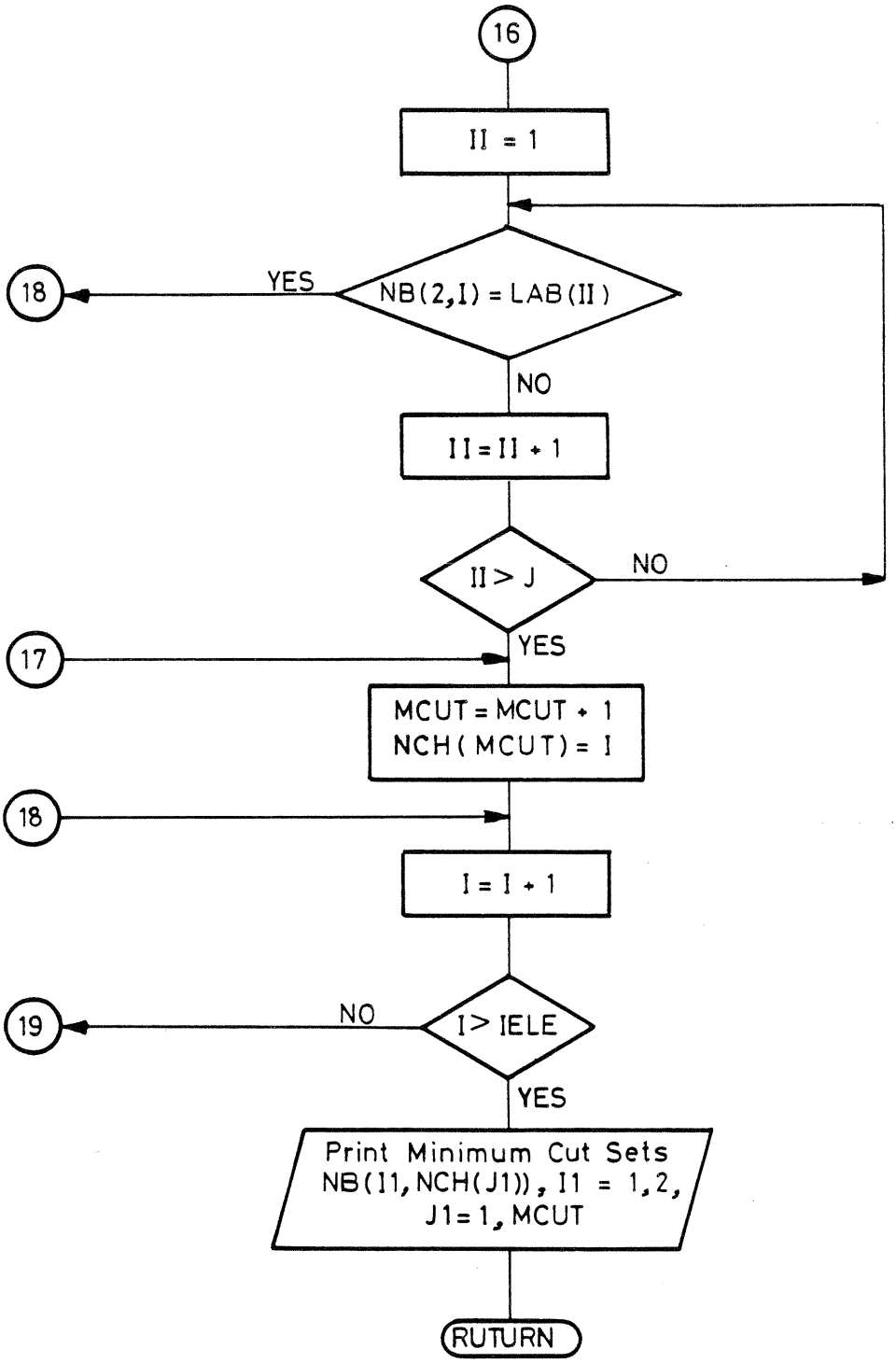
16
II = 1
18
YES
NB(2,I) = LAB(II)
NO
II = II + 1
II > J
NO
17
YES
MCUT = MCUT + 1
NCH(MCUT) = I
18
I = I + 1
19
NO
I > IELE
YES
Print Minimum Cut Sets
NB(I1, NCH(J1)), I1 = 1,2,
J1 = 1, MCUT
RUTURN

17 From 17

Report No. 3

SERVICE CONTINUITY ASSESSMENT FOR THE 220 KV POWER NETWORK OF LOWER EGYPT

S. El-Sobki

F. Fouad

Service Continuity Assessment for the 220 kv power Network of Lower Egypt

The 220 KV power network of Lower Egypt is composed of thirty six transmission lines. They are connected to each other through eighteen node points (Bus-Bars), eleven of which are purly load points, six generation points with local loads, and one pure generation node representing the bulk power transfered from upper Egypt to lower Egypt. The 220 kv network is shown in Fig. (1). The station capacity at the generation bus-bars and their local loads are listed in table (1), and the load requirements from the 220 kv network are shown in Table (2). The forced outage rates of the transmission lines of the network are shown in Table (3), while the forced outage rates of the generating stations are shown in Table (4). The power factor of all the loads and the generating stations of the network is considered to be the same and its value is taken as 0.85. The power system analysis package of I.C.L. 1900 series was used to determine the initial load flow throughout the network. The TRANSPO package was applied to six individual particularly important load points of the 220 KV network namely:

1. Bus Bar 18
2. " " 21
3. " " 14
4. " " 10
5. " " 8
6. " " 5

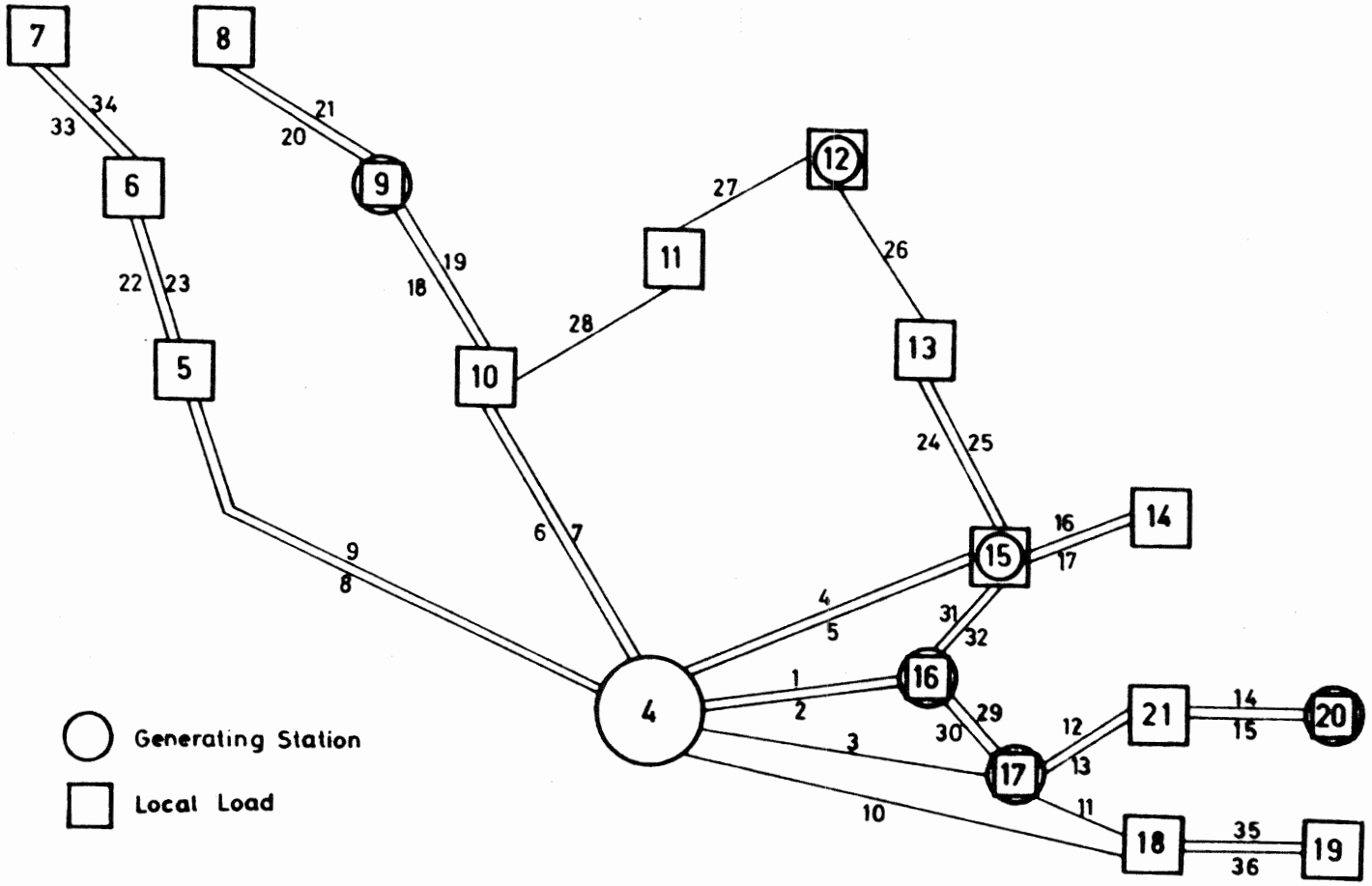

MAP OF 220 KV NETWORK

Fig. 1

Power Delivery to the 220 kv

Network

Bus No.	Station Capacity M.W.	Local Load M.W.	Power Contribution to 220 kv network
4	900	-	900
9	195	81	114
16	180	119	61
17	220	139	81
20	65	49	16

Table (1)

Load Requirements from
the 220 kv network

Bus No.	Peak Load M.W.	Local Generation (if any) M.W.	Local Demand from 220 KV Network, MW
5	30	-	30
6	170	-	170
7	50	-	50
8	170	-	170
10	47	-	47
11	94	-	94
12	223	90	133
13	82	-	82
14	174	-	174
15	127	90	37
18	193	-	193
19	47	-	47
21	98	-	98

Table (2)

Forced Outage Rates of Transmission

Lines of the 220 kv Network

Element No.	Forced Outage Rate	Element No.	Forced Outage Rate
1	0.0000071	19	0.0004434
2	0.0000000	20	0.0006293
3	0.0101053	21	0.0003655
4	0.0004515	22	0.0006179
5	0.0001302	23	0.0000351
6	0.0000161	24	0.0014549
7	0.0000085	25	0.0027193
8	0.0003717	26	0.0003389
9	0.0000304	27	0.0000261
10	0.0001853	28	0.0000161
11	0.0000000	29	0.0001302
12	0.0018318	30	0.000355
13	0.0111429	31	0.0040426
14	0.0018318	32	0.0007586
15	0.0111429	33	0.0006179
16	0.0094598	34	0.0000351
17	0.0001002	35	0.0006179
18	0.0001444	36	0.0000351

Capacity of each Transmission Line of the Network = 240 MW/circuit

Table (3)

Forced Outage Rates of the Generators
of the 220 kv Network

Power Station No.	Forced Outage Rate
4*	0.000041
9	0.002023
16	0.008314
17	0.046025
20	0.000900

* Equivalent power transferred from Upper to Lower Egypt

Table (4)

The forced outage rates listed in the above table are based on the exact boiler/turbine configuration of the station and using the individual FOR rates of each element. The given figure is the probability for the station to supply its full rated output power.

The power system analysis package of I.C.L. 1900 series was used to determine the initial load flow throughout the network. The normal flow through an element may be viewed as a constraint on the element's capacity to accept extra loading. All capacities of elements are therefore reduced by amounts equal to their respective normal loading. For each case, the power package was used to determine the initial load flow throughout the network without considering the value of the load at that particular bus-bar. Then the "TRANSPO" package was applied taking into account the value of the load at that bus and the modified element capacities for that case. The assessment of the six individual particularly important load points at lower Egypt from reliability point of view is tabulated in the following tables:

Bus bar No.	Peak Load MVA	Loss of Load Probability	Unserved Energy MW hr/year	Loss of Energy Probability
18	282	0.188×10^{-3}	154.1	0.072×10^{-3}
21	115	0.204×10^{-4}	17.2	0.199×10^{-4}
14	248	0.310×10^{-5}	2.5	0.136×10^{-5}
8	200	0.339×10^{-6}	0.5	0.302×10^{-6}
5	294	0.249×10^{-5}	1.5	0.067×10^{-5}
10	55	E	E	E

* E is less than 0.04×10^{-8}

Table 5

Bus bar No.	Location	Principal Elements
18	Wadi-Houf	10 & 11
21	Cairo East	12 & 13
14	Heliopolis	16 & 17
8	Abis	18 & 19 & 20 & 21
5	Abou-El-Matamir	8 & 9

Table 6

The equivalent global loss of load probability of the whole network is calculated also as a result of the TRANSPO package. To calculate that, the common successful states have to be identified. These common successful states represent the states at which all the different loads in the network are satisfied. For any other state, there is a loss of load at one point in the network or another. The probabilities of the common successful state are calculated and equal to 0.99934. Hence the equivalent global loss of load probability of the whole network is equal to (1-0.99934) = 0.00066 i.e. there is one whole day loss of load probability every four years.

The global unserved energy of the whole network is calculated also as result of the TRANSPO package. For each unacceptable state, there is a certain amount of power lost and this state exists during a period of time, i.e., there is a certain amount of energy lost in each unacceptable state. The global unserved energy is then calculated as the summation of the values of the unserved energy for all the unacceptable states at each load point of the network. The unserved energy of the six individual load points under study equals to 175.8 MW hr/year.

The corresponding loss of energy probability is calculated as the division of that unserved energy by the total amount of energy demand during the year, and is equal to 0.189×10^{-4}.