PD-ACH-092

USAID/SRI LANKA HAND PUMP PROGRAM

BEST AVAILABLE COPY

GEORGIA INSTITUTE OF TECHNOLOGY
ATLANTA, GEORGIA 30332

Project No. A-2611

FINAL REPORT

USAID/SRI LANKA HAND PUMP PROGRAM

Prepared for
The United States Agency for International Development
Under Contract No. U.S. AID/Sri Lanka 80-0001

By
James F. Columbo, Research Engineer
Stephen R. Harper, Research Engineer
Terrence L. Moy, Research Engineer
P. Alan Pashkevich, Research Engineer
Phillip W. Potts, Senior Research Scientist
and Project Director

International Division
Technology Applications Laboratory
Engineering Experiment Station
GEORGIA INSTITUTE OF TECHNOLOGY
Atlanta, Georgia
March 1982

TABLE OF CONTENTS

	Page
Acknowledgements	i
Summary	v
INTRODUCTION	1
Scope of Work	1
Review of Past Hand Pump Programs	2
Georgia Tech and the AID Hand Pump	4
Health Aspects	7
The Sri Lanka International Drinking Water and Sanitation Decade (1981-1990) Plan	11
Program Described Herein	13
PROJECT ISSUES AND ACCOMPLISHMENTS	15
Private Enterprise (Foundry) Development	15
Foundry Selection	15
Foundry Operations	18
Pump Installation and Maintenance	20
Site Selection	20
Well Construction	21
Pump Installation	24
Construction/Installation Costs	24
Pump Maintenance	25
Pump Testing (Field and Lab)	27
Field Testing	27
Lab Testing	29
Well Water Quality Testing	32
Villager Acceptance of Hand Pumps	34
Economic Advantages of Local Manufacture	34
FUTURE APPLICATIONS OF THE AID HAND PUMP IN SRI LANKA	37
APPENDICES	
A. Manufacturing	39
B. AID Hand Pump Shop Drawings	49
C. Construction and Installation	79
D. Maintenance Training/Infrastructure	93
Future Maintenance Programs	99
National Water Supply and Drainage Board (NWSDB)	99
Technical Officers of the Assistant Commissioner for Local Government (ACLG)	99

Technical Officers of the District Development Council (DDC) 101
The Community Centre (CC) 101

E. Maintenance Manual 103

F. CISIR Lab Testing Results 121
Test Procedure-Life Cycle Test 123
Interim Report 127
Final Report 139

G. Water Quality 141
Chemical Test Parameters 143
Chemical Test Results 144
Bacteriological Monitoring 152
Shock Disinfection 156
Regional Soil Types 157

H. Equipment, Materials and Supplies Donated to Government of Sri Lanka 159

Tables

1. Leading Causes of Morbidity and Mortality in Sri Lanka (1975) 9
2. Component Machining Rates and Equipment 20
3. Sites Selected to Receive Hand Pumps, Their Total Depth and Diameters 22
4. Construction/Installation Costs 25
5. Spare Parts Price List 35
6. Chemical Test Results--Kalutara 145
7. Chemical Test Results--Hambantota 146
8. Chemical Test Results--Kandy 147
9. Chemical Test Results--Amparai 148
10. Chemical Test Results--Jaffna 149
11. Sites Selected for Bacteriological Monitoring 154
12. Bacteriological Test Data For Kalutara Sites 155
13. Bacteriological Test Data for Hambantota Sites 155
14. Amounts of Chemicals Required for a Strong Chloride Solution Capable of Disinfecting Wells After Their Construction 156

Figures

1. Map of Sri Lanka Showing Areas of Work iv
2. AID Hand-Operated Water Pump (Deep-Well) 5
3. AID Hand-Operated Water Pump (Shallow-Well) 6
4. AID Hand Pump Installed in Kalutara, Sri Lanka--1981 7
5. A Morning Queue for Water in the Jaffna District 11
6. Pump Patterns 41
7. Mold Preparation 42
8. Pouring Metal from Cupola to Ladle 43

9.	Pouring Metal Into Mold	44
10.	Cast Parts From Mold	45
11.	Machining the Pump Cap	46
12.	Testing of Pump in Foundry	47
13.	Typical Unimproved Well in Sri Lanka	81
14.	Construction of Formwork	82
15.	Steel Reinforcing	83
16.	Concrete Placement	84
17.	Close-up of Pump Base	85
18.	Pump Pedestal	86
19.	Attaching the Drop Pipe to a Shallow-Well Pump	87
20.	Securing the Pump to the Concrete Cover Platform	88
21.	Initial Priming of the Pump	89
22.	Lowering the Cap onto the Pump	90
23.	Site Drainage	91
24.	Assembly of PVC Drop Pipe	95
25.	Attaching Drop Pipe to Pump Base	96
26.	Bolting Pump Body and Base to Well Cover	97
27.	Bolting Cap Assembly onto Pump Body	98
28.	Government of Sri Lanka Maintenance Infrastructure	100
29.	Chloride, Color, Turbidity and Hardness Regional Averages	150
30.	Alkalinity, Iron, Manganese and Sulfate Regional Averages	151
31.	Nitrate and Nitrite Regional Averages	152

Acknowledgements

This program of locally manufacturing and field testing the AID hand-operated water pump would never have progressed without the invaluable assistance of many individuals and organizations. The authors of this report would like especially to thank Ms. Sara Jane Littlefield (USAID Sri Lanka Mission Director), Mr. James Meenan (USAID Capital Development Officer), Mr. R. Paskaralingam (Secretary, Ministry of Local Government, Housing and Construction), and Mr. Harold Fernando (Senior Assistant Secretary, Ministry of Local Government, Housing and Construction) for their contributions to a very successful program.

While it is impossible to list all of the individuals who have rendered assistance, the following must be acknowledged with great appreciation and the hope that each will pass along the gratitude of the Georgia Institute of Technology project personnel to all associated with the program described herein:

Mr. N. D. Peiris	Chairman, National Water Supply and Drainage Board
Mr. T. B. Madugalle	General Manager, National Water Supply and Drainage Board
Mr. Pathmasiri Dias	Managing Director, Somasiri Huller Manufactory
Dr. M. H. C. Wijetunge	Deputy Director, Ceylon Institute for Scientific and Industrial Research
Mr. J. A. D. P. Jayanetti	Assistant Commissioner of Local Government, Amparai
Mr. B. M. S. Wegapitaya	Investigating Officer, Amparai
Mr. Senarath Gunasena	Assistant Commissioner of Local Government, Hambantota
Mr. M. S. Issadeen	Superintendent of Construction Works, Hambantota
Mr. Anton Alfred	Assistant Commissioner of Local Government, Jaffna
Mr. R. Kanagasabaratnam	Superintendent of Construction Works, Jaffna
Mr. T. Gunesekaram	District Engineer, Water Resources Board, Jaffna

Mr. H. Sumanapala	Assistant Commissioner of Local Government, Kalutara
Mr. S. P. Perera	Superintendent of Construction Works, Kalutara
Mr. S. N. B. W. M. Mantripala	Assistant Commissioner of Local Government, Kandy
Mr. T. B. Alahakoon	Superintendent of Construction Works, Kandy
Mr. Lawrence Cowper	USAID/Sri Lanka Regional Malaria Control Officer
Mr. Oswin Silva	Special Assistant to USAID Mission Director

Figure 1. Map of Sri Lanka Showing Areas of Work

PREVIOUS PAGE BLANK

Summary

In October 1979, Georgia Institute of Technology (Georgia Tech) engineers were assigned the task of determining the feasibility of locally manufacturing the AID hand pump in Sri Lanka. In order to measure the manufacturing capabilities, project personnel surveyed wholesale and retail establishments, foundries, machine shops, and plastics manufacturers. Sri Lanka was found to be an ideal country for introduction of the AID hand pump. Local manufacturers, in general, offered an attractive price and had the capability to manufacture a quality pump. Sri Lanka also proved especially appropriate for the large scale installation of hand pumps because the dispersion of the rural population rendered piped water systems economically unfeasible and because of the existence of a large number of open wells that needed to be sealed from external contamination. In March 1980, after completing this preliminary survey and concluding that adequate market and local manufacturing capabilities were available, USAID/Sri Lanka authorized Georgia Tech to proceed with the implementation of a USAID/Sri Lanka hand pump program.

A contract was signed between Georgia Tech and Somasiri Huller Manufactory (SHM) in March 1980 for the production of 90 AID hand pumps (45 shallow-well and 45 deep-well). These 90 pumps were manufactured at a unit selling price of $149 and, following assembly and before delivery to preselected sites, each pump was checked in the factory for quality of manufacture and individually tested on a drum of water to conclude the first phase of the project.

The second phase of the project dealt primarily with field testing of the AID hand pumps and involved their installation at selected sites around the country (see Figure 1). Thirty-nine sites were chosen from a field of 130 which had been identified by Government of Sri Lanka (GSL) officials. Seventy-nine pumps were eventually installed at the 39 sites.

The manufactured AID hand pumps were continuously monitored and evaluated for overall performance, and the resulting data fed back to the pump

manufacturer for any necessary corrections and/or improvements. Following factory corrections and/or improvements based on data derived from both field and laboratory testing, further monitoring and evaluation took place. Other problems, due primarily to improper installation, maintenance or repair procedures, were addressed with all levels of the Sri Lankan Government maintenance infrastructure in the form of additional and/or corrective on-site training.

The effectiveness of the AID hand pump monitoring activities, especially those carried out in the field, was shown when a final inspection tour was made in December 1981 of the five districts (Kalutara, Hambantota, Kandy, Amparai and Jaffna) where the 79 pumps had been installed. At the time of the inspection all pumps were found to be in good working order with the exception of five. In Kalutara one pump was found to be leaking significantly at the base thread connection due to wear and/or poor machining (this was remedied by resealing the connection with a joint compound). In Hambantota, two deep-well pumps were not operating for unknown reasons (citing previous reports of vandalism and abuse, government officials were in the process of designating alternate maintenance personnel). Two other pumps in Hambantota were inoperable due to missing parts that had been confiscated by police in connection with a domestic dispute betweeen two villagers (one of whom was the caretaker of the pumps). The remaining 74 pumps were observed to be properly maintained and widely accepted by users. The maintenance infrastructure, reviewed at the time of the inspection tour, was found to be operating smoothly.

As part of this project, water quality testing was performed at the site of each AID hand pump. Regionally, Jaffna had the poorest quality water from a physicochemical standpoint with very high chloride, hardness and alkalinity. Aside from high levels of iron and low pH levels, Kalutara had a very desirable quality groundwater. The Kandy district also had very desirable water, with slightly higher color and turbidity levels than found at Kalutara. The sites in Hambantota and Amparai were similar to each other with some chloride evident, and fairly high sulfate, alkalinity, hardness and iron. The Hambantota sites, however, also were high in nitrate and manganese.

In order to study the rate of bacteriological recontamination, if any, of the well sites, an extensive testing program was conducted for 15 wells in Kalutara and Hambantota. These wells were disinfected, then tested for coliforms approximately every other week. If contamination was indicated, the contaminated well was redisinfected and monitored further. Records of contaminations rates were kept for Kalutara and Hambantota and the average regional recontamination rates were calculated from this data. However, these averages are not indicative of individual site results where similar conditions yielded quite varied results, perhaps from external interferences such as bucket dipping or repair operations that caused recontamination. Thus, based on the data and the test conditions, it would be very difficult to statistically justify an estimation of a disinfection frequency for each district, or even for each well, without further research.

Villager acceptance of the AID hand pumps manufactured and installed in Sri Lanka has been excellent with no resistance to the covering of the wells and installation of the pumps.

In conclusion, there have been very positive results from the USAID hand pump program in Sri Lanka, as evidenced by widespread interest from both the private and public sectors. For example, an order for 380 AID pumps has been placed by the Ministry of Plan Implementation for the Integrated Rural Development (IRD) Projects in the three districts of Kurunegala, Matale and Puttalam. In addition, IRD projects at Badulla, Nuwara Eliya, Galle, Kandy and Kegalle will include 600 wells. Approximately 500 wells are included in the Matale and Polonnaruwa Districts under the DANIDA rural water supply and sanitation project. A Finnish project, also expected to commence in 1982 for the Harispattuwa electorate, will include 300 to 400 wells. As a result, Mr. Harold Fernando, Senior Assistant to the Secretary of the Ministry of Local Government, Housing and Construction (MLGHC), has estimated there are 20,000 open wells now and an annual need for 2,000 hand pumps until 1984 when the demand is expected to increase to 3,000 and then to 4,000 annually from 1985 onwards until a total of some 40,000 pumps have been installed.

Based on the present price of the AID hand pump (approximately U.S. $150) compared to the cost of its nearest comparable competitor (the India MK II at U.S. $350), the benefits in direct savings and reduced foreign spending are readily apparent. Coupled with the incentives of the expected market demand, it is not difficult to envision the opportunities available to potential manufacturers.

Importantly, the USAID hand pump program has permitted the Government of Sri Lanka to implement its Decade Plan for rural water through a rapid impact approach that allows present installation of hand pumps while preparing for longer term design and construction of piped water supply systems in more densely populated areas.

INTRODUCTION

Scope of Work

In October 1979, Georgia Institute of Technology (Georgia Tech) engineers were assigned the task of determining the feasibility of locally manufacturing the Agency for International Development (AID) hand-operated water pump in Sri Lanka. In March 1980, after completing this preliminary survey and concluding that adequate market and local manufacturing capabilities were available, USAID/Sri Lanka authorized Georgia Tech to proceed with the implementation of a USAID/Sri Lanka hand pump program.

The primary objectives of the program, to be carried out in two distinct phases, were:

Phase One:

1. To provide the technical assistance necessary to establish local production of the AID hand pump.

2. To oversee the manufacture of a production run of 90 AID hand pumps.

Phase Two:

1. To implement a field hand pump installation program.

2. To assess the impact and effectiveness of the hand pumps by monitoring and evaluating water quality, hand pump performance data and general user acceptance.

Georgia Tech engineers also undertook additional tasks designed to assure the successful introduction of the AID hand pump in Sri Lanka. These tasks included:

1. The printing of an illustrated maintenance and repair manual (prepared in English, Singhalese and Tamil).

2. The development and monitoring of a hand pump test program at the Ceylon Institute for Scientific and Industrial Research (CISIR) designed to give accelerated wear data under laboratory conditions.

3. The implementation of an expanded water quality monitoring program designed to provide further information about the time-effectiveness of shock disinfection, soil types and recontamination rates.

Review of Past Hand Pump Programs

Prior hand-operated water pump programs in Less Developed Countries (LDC's) have met with varying degrees of success. For most rural situations where a protectable spring is not available, hand pumps offer the most economical means of maintaining an accessible, safer water source. However, the less than satisfactory success record of many of these programs would indicate that many problems have not been effectively addressed. In one part of India, when 44 pumps were inspected three years after their initial installation, only 17 were still functioning.1/ This trend was similarly noted in a technical paper on hand pumps prepared under the joint sponsorship of the United Nations Environment Programme (UNEP) and the World Health Organization (WHO)2/ which reported:

1/ "Hand Pump Maintenance," Arnold Percy, International Technology Publication, 1977, London.

2/ "Hand Pumps for Use in Drinking Water Supplies in Developing Countries," Technical Paper No. 10, International Reference Centre for Community Water Supply, Voorburg (The Hague), The Netherlands, July 1977.

The high rate of abandoned or defective hand pumps is not simply a reflection of poor quality pumps but also of inadequate maintenance and repair. Thirty to eighty percent of pumps out of operation at one time in a hand pump program is a not uncommon experience.

The paper continued by characterizing the shortcomings of these programs as follows:

1. Poor quality of hand pump design and manufacture.

2. Lack of feedback from maintenance to engineering and procurement personnel. Inadequate record-keeping.

3. Poor maintenance skills, lack of training, inadequate tools, lack of transport, and lack of supervision.

4. Invisibility of maintenance and lack of urgency. Users return to their pre-hand pump source. Maintenance supervisors are far removed from scene or need.

5. Lack of appreciation of preventive maintenance. Maintenance seen as repair function.

More recently, a June 1981 newsletter distributed by the International Reference Centre for Community Water Supply and Sanitation[3/] reported:

Although appreciable progress is being made in many developing countries with regard to well drilling and hand pump installation for rural water supplies the same is unfortunately not true of the maintenance of pumps once they are installed. In fact, hand pumps break down frequently at alarming rates--up to 60% within

---

3/ "International Reference Centre for Community Water Supply and Sanitation," N.122, June 1981, Rijswijk (The Hague), The Netherlands.

one year is no exception--and remain unrepaired for long periods of time because of lack of adequate provisions for maintenance and repair. Concentrated efforts are required if the impact of many hand pump installation programmes is to continue.

From the above it can be seen that while the quality of hand pump design and manufacture remains the foundation of a successful rural water supply program, implementation of an effectively integrated maintenance program is essential to sustained success.

Georgia Tech and the AID Hand Pump

In response to the need in developing countries for a reliable and improved supply of safer water and the corollary worldwide need for a long-lasting, easily maintained and repaired, economical, locally manufactured hand pump, AID began a series of contracts with the Battelle Memorial Institute to design and laboratory test a reciprocating shallow- and deep-well pump. A final design was developed (see Figures 2 and 3) and, in late 1976, Georgia Tech was contracted by AID to select two developing countries for local manufacturing and field testing. The scope of work included providing technical assistance to foundries and machine shops in the manufacturing operation, and evaluating the performance and acceptability of the hand pump when heavily used in field situations.

Nicaragua and Costa Rica were chosen as initial test countries. Local manufacture of the AID hand pump was completed and field trials initiated between January 1977 and September 1979. The AID pump was subsequently determined to be reliable, sturdy, easily maintained, low in cost compared to imports, and capable of being manufactured in developing countries. After completing local feasibility surveys of existing manufacturing capabilities, AID hand pump programs were initiated in the Dominican Republic, Indonesia, Tunisia, Sri Lanka, Honduras, Ecuador, and most recently the Philippines.

From these programs, Georgia Tech has established a methodology for coordinating the efforts of private sector manufacturers and government

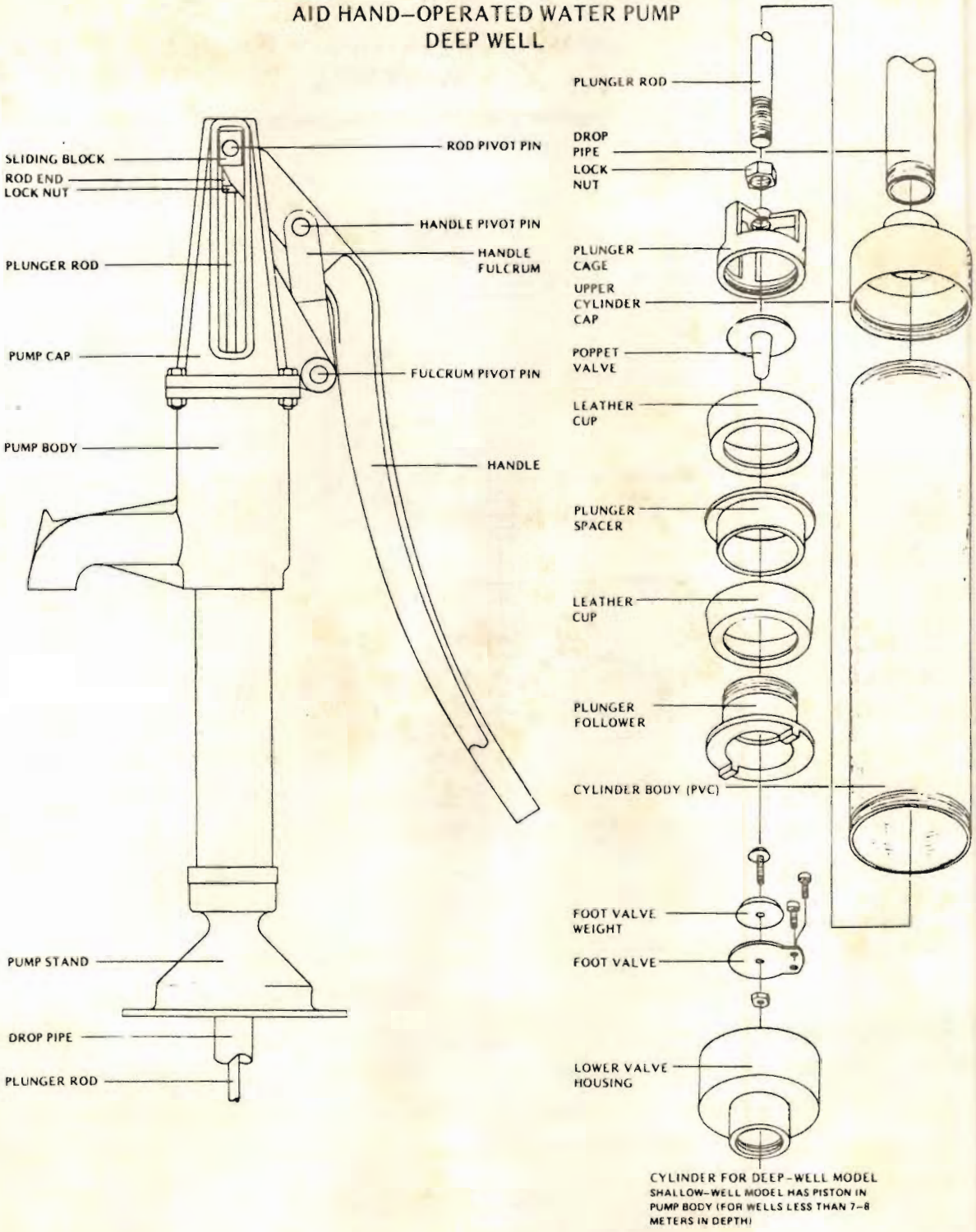
AID HAND–OPERATED WATER PUMP
DEEP WELL
SLIDING BLOCK
ROD END
LOCK NUT
PLUNGER ROD
PUMP CAP
PUMP BODY
PUMP STAND
DROP PIPE
PLUNGER ROD
ROD PIVOT PIN
HANDLE PIVOT PIN
HANDLE FULCRUM
FULCRUM PIVOT PIN
HANDLE
PLUNGER ROD
DROP PIPE
LOCK NUT
PLUNGER CAGE
UPPER CYLINDER CAP
POPPET VALVE
LEATHER CUP
PLUNGER SPACER
LEATHER CUP
PLUNGER FOLLOWER
CYLINDER BODY (PVC)
FOOT VALVE WEIGHT
FOOT VALVE
LOWER VALVE HOUSING
CYLINDER FOR DEEP-WELL MODEL
SHALLOW-WELL MODEL HAS PISTON IN PUMP BODY (FOR WELLS LESS THAN 7–8 METERS IN DEPTH)

Figure 2.

AID HAND–OPERATED WATER PUMP
SHALLOW WELL

(For Wells less than 7-8 meters in depth)

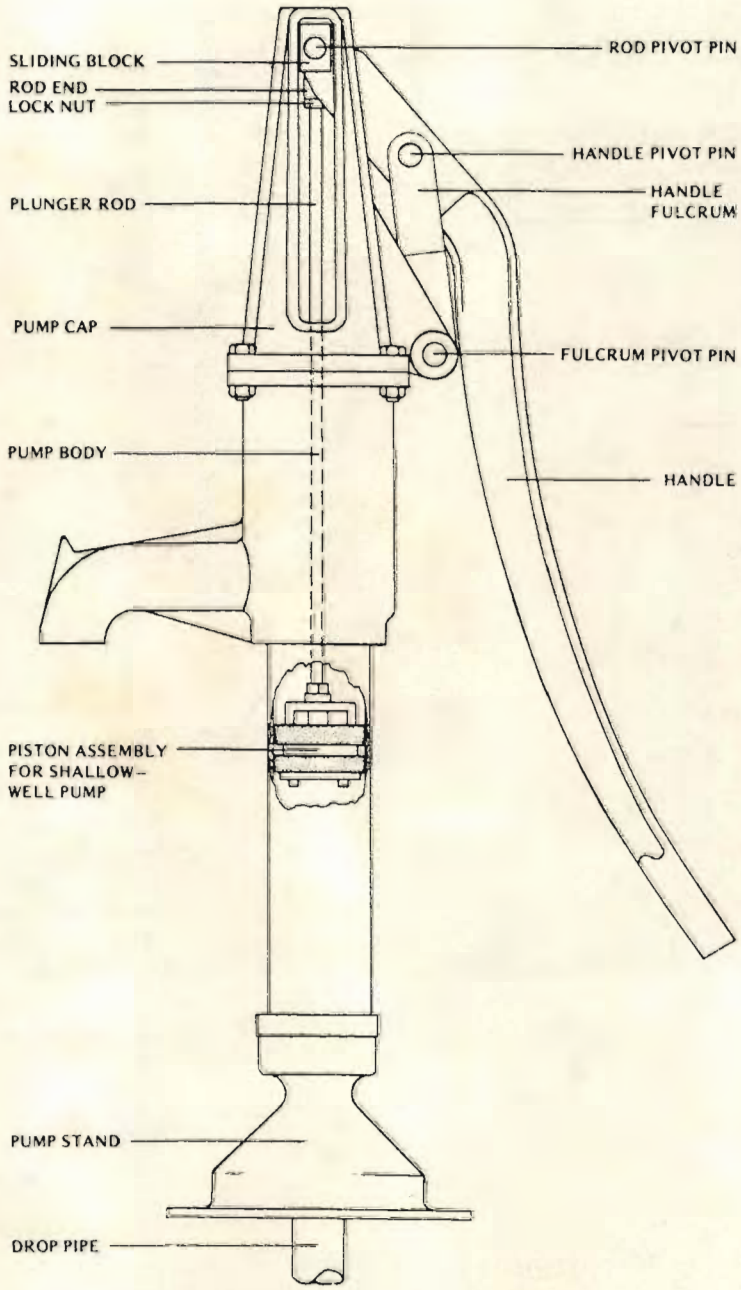

Figure 3.

organizations in implementing comprehensive hand pump programs that address a wide range of technical needs. These include quality control in pump production; site selection; pump installation; pump performance monitoring and evaluation; training in installation, maintenance and repair; and water quality analysis. As discussed in the following section, there remains a significant need for the continued application of this methodology by the Government of Sri Lanka (GSL).

Figure 4. AID Hand Pump Installed in Kalutara, Sri Lanka--1981

Health Aspects

An unpublished 1979 Sri Lanka Governmental Ministry of Health report, "Development of Primary Health Care in Sri Lanka," indicates that significant progress has been made in the overall health picture in this nation. The indices for Infant Mortality Rates (46/100,000), Maternal Mortality Rates (1/100,000 live births), and Crude Death Rates (8/1,000) show relative improvement over past years.

However, the report goes on to say that these national averages hide tragedies in remote communities where the Infant Mortality Rate is typically 85/100,000 and the Maternal Mortality Rate approaches 2.5/100,000. Similarly, morbidity figures show increases in specific illnesses like cholera, V.D., filaria and T.B. Also, a resurgence of controlled diseases has occurred in the recent past resulting in endemic outbreaks of diarrheal diseases. The report relates these health problems to the following:

1. The environment--sources of water, disposal of excreta and other waste and pollution.

2. The control of vectors--mosquitoes.

3. Nutrition, agricultural production, and cultural habits and patterns.

4. Family size, population pressures and aggravation of health problems in rural and urban slums.

5. The life system of people--accidents, alcoholism, smoking, etc.

In 1975, morbidity figures showed enteritis and other diarrheal diseases fourth in frequency with 92,772 reported cases out of a total of 2,113,028 treated in government hospitals. Mortality causes showed enteritis and other diarrheal diseases third in frequency with 2,012 deaths out of a total number of deaths from all causes of 32,366 reported by government hospitals (see Table 1).

In documentation prepared by USAID/Colombo[4/] water supply was related to the current Sri Lanka health and waterborne disease situation:

The lack of suitable water supplies...has serious quality of life and health impacts on the population. In spite of advances

---

4/ "Country Development Strategy Statement for FY 1981-85," USAID/Colombo.

Table 1

LEADING CAUSES OF MORBIDITY
AND MORTALITY IN SRI LANKA (1975)
(IN RESPECT TO NUMBER OF IN-PATIENTS TREATED
IN GOVERNMENT HOSPITALS)

	Morbidity	Frequency
1.	Delivery without mention of complications	238,621
2.	Admitted for delivery but not delivered	88,355
3.	Malaria	108,003
4.	Influenza	76,726
5.	Chronic bronchitis and bronchitis unspecified	83,752
6.	Enteritis and other diarrheal diseases	92,772
7.	Other diseases of the digestive system	43,635
8.	Other diseases of genito urinary system	46,228
9.	Lacerations and open wounds including dog bites	95,365
10.	Infections of skin and subcutaneous tissues	69,684
11.	Superficial injury, contusion and crushing with intact surface	52,235
12.	Symptoms of ill-defined conditions	44,970
13.	Other non-digestive diseases	1,072,682
	Total number of cases treated for all diseases	2,113,028

	Mortality	Frequency
1.	Enteritis and other diarrheal diseases	2,012
2.	Ischemic heart	1,023
3.	Other forms of health diseases	2,313
4.	Bronchial pneumonia	1,998
5.	T.B. of respiratory system	1,007
6.	Other causes of perinatal morbidity and mortality	1,888
7.	Other avitaminosis and nutritional deficiencies	950
8.	Senility without mention of psychosis	943
9.	Cerebrovascular disease	907
10.	Hypertensive disease	811
11.	Miscellaneous diseases	18,514
	Total number of deaths from all causes (institutional)	32,366

SOURCE: Development of Primary Health Care in Sri Lanka.

in the field of health in Sri Lanka over the last decade, there has been a recent increase in the incidence of infectious and parasitic diseases. Gastroenteritis, which remains the main cause of high infant mortality (51/1,000 births in 1974), is associated with inadequate, unsafe water supplies and unsanitary environmental conditions. Approximately 40% of all hospital admissions are due to preventable, communicable diseases, most of which can be attributed to poor environmental conditions including the lack of safe water. Cholera and other diseases related to unsafe water supplies such as typhoid and bacillary dysentery are endemic in many parts of the country....

In 1976, there were 728 cases of cholera (El Tor) in Sri Lanka with Jaffna and Colombo South being the main problem areas. Even with inadequate and incomplete reporting from available hospital statistics the magnitude of water-related diseases is significant. It was not possible to obtain meaningful statistics on the impact of adequate water supplies and nutrition, skin diseases, parasitic intestinal diseases and other water related diseases, but world-wide experience over the last several decades has given evidence that a safe, adequate water supply is essential in the orderly development of a healthy society. In addition to the direct impact on the quality of life of safe water, the savings in terms of direct costs of loss of productivity from reduced hospital admissions is also significant.

The report also cites the following from a draft health sector paper for the GSL 1979-83 Medium Term Investment Plan:

The disease pattern in Sri Lanka is characterized by the predominance of preventable diseases. The leading causes of hospitalization, outdoor treatment and death can be traced to the lack of environmental sanitation, especially safe water supply, sewage disposal, food hygiene and vector control.

About 40% of those seeking treatment at government medical institutions suffer from bowel diseases: mainly typhoid fever, dysentery, gastroenteritis, colitis, and helminthic infestation; hospital admissions for bowel diseases alone indicate an incidence rate of 940/100,000 in 1975. Gastroenteritis remains the main cause of high infant mortality.

Figure 5. A Morning Queue for Water in the Jaffna District

The Sri Lanka International Drinking Water and Sanitation Decade (1981-1990) Plan

Fortunately for the citizens of Sri Lanka, their government considers the improvement of the quality of life of all its people to be one of its primary objectives. This is evidenced by Sri Lanka's International Drinking Water and Sanitation Decade Plan. The Plan, in general, outlines the national goals of the Government to improve the quality and quantity of drinking water and sanitation facilities available to the entire population

by the year 2000. For instance, the Government plans to improve water supply conditions in four specific areas:

1. Quality: The majority of water supplies used for drinking and other social purposes, such as bathing, washing, and cooking, are not considered safe. To remedy this, the Government will introduce all necessary improvements at both ends of the supply chain. Various forms of treatment at the sources of supply will be matched by continuous testing and monitoring at points of consumption.

2. Quantity: The quantities of water available in most urban and rural areas are insufficient. The Government will undertake the activities required to develop new surface and groundwater sources.

3. Reliability: The consumer's concept of reliability is based on two criteria: quality of water and, more importantly, continuity of supply. Quality considerations involve improvements in both existing and future water supplies, and continuity involves the assurance that water will be available at a specific time and at a specific location. It is the goal of the Government to ensure the reliability of all water supplies to all Sri Lankans.

4. Accessibility: The distance between the source of water supply and the point of consumption is a matter which has great social and economic consequences. The social consequences include aspects of convenience and energy expended in carrying a quantity of water. The economic consequences include the time and energy spent carrying water which could otherwise be channeled into productive or leisure activities. Consequently, it is the goal of the Government to make existing and future water services more accessible by placing them as close as possible to the consumers, namely, in or near the house or work place.

Program Described Herein

As noted earlier, Georgia Tech was authorized in March 1980 by USAID/Sri Lanka to proceed with the implementation of a program for local manufacture of the AID hand pump in Sri Lanka. This program allowed the Government of Sri Lanka to quickly move into its Decade Plan with cost-effective hand pumps for rural populations while more complicated piped water systems were being planned, designed and constructed in more densely populated regions.

By the end of 1980, a manufacturer had been contracted and casting patterns were made. In the field, Georgia Tech engineers began site surveys and preliminary water quality sampling in the regions of Kalutara, Hambantota, Kandy, Amparai and Jaffna. After the initiation of work contracted to seal existing open well sites, the first AID hand pumps were installed in Kalutara in February 1981. Site construction, hand pump installation, and maintenance and repair training continued in the five regions until September 1981 when work at all sites was completed. Pump monitoring and performance evaluation continued until December 1981 when Georgia Tech personnel made a final inspection of all sites.

At the conclusion of the testing period, monitoring data from the field and from the CISIR laboratory were collected and studied to assess the effectiveness of the program. It was determined that the AID hand pump, as manufactured in Sri Lanka, offered a sturdy and cost-effective alternative to imported pumps for use in implementing a rural water supply program. It was also shown that a viable maintenance infrastructure could be established utilizing resources at the "grass roots" level and integrating them into the existing Government organizations.

It should be mentioned that the program has gone beyond the mere transfer of the technology (the hand pump). It has also assisted the Government in addressing related issues of training, maintenance, villager acceptance, and institution building. Other donors, e.g., UNICEF, Finland, and Denmark, who are working on rural water supply systems for Sri Lanka have also been aided by the program in the selection of an appropriate hand pump, development of water sources, water quality analysis, etc.

PROJECT ISSUES AND ACCOMPLISHMENTS

Private Enterprise (Foundry) Development

Foundry Selection. In October 1979, Georgia Tech engineers were assigned the task of determining the feasibility of locally manufacturing the AID hand pump in Sri Lanka. In order to measure the manufacturing capabilities, project personnel surveyed wholesale and retail establishments, foundries, machine shops, and plastics manufacturers. Sri Lanka was consequently found to be an ideal country for introduction of the AID hand pump. Local manufacturers, in general, offered an attractive price and had the capability to manufacture a quality pump. Sri Lanka also seemed very appropriate for the installation of hand pumps on a large scale because the dispersion of the rural population made piped water supply systems prohibitively expensive and because of a large number of existing open wells that needed to be sealed from external contamination. During the initial survey, the following six foundries and machine shops were investigated for possible manufacture of the AID hand pump in Colombo, Kandy, and Jaffna.

Jinasena Ltd., in Colombo, was the most impressive organization investigated for hand pump manufacturing and left little doubt as to its ability to manufacture quality products. It was a holding company that purchased rough castings from Jinasena Castings and then carried out its own finishing operations (a major product line was centrifugal pumps). It had the following equipment for finishing the rough castings, for assembling the cast components and for controlling the quality of the finished product:

- Large and small lathes
- Several sizes of milling machines
- Precision drilling machines
- Sanders and grinders
- Spray painting facilities
- Simulated head testing stations
- Conveyors for mass production assembly

PREVIOUS PAGE BLANK

Jinasena Casting had 15,000 square feet of foundry space housing the following equipment:

- Sand mixers
- Medium-sized cupola for melting iron
- Furnace for melting brass
- Furnace for melting aluminum
- Oven to dry oil-based cores
- Hand and pneumatic presses for handling sand molds
- Special furnaces in which iron is melted and metals such as nickel and chromium are automatically added to the iron for specific, desired metallurgical content

Based on a brief analysis of blueprints and a prototype manufactured in Indonesia, the AID hand pump was quoted at $65 per unit for local manufacture by Jinasena.

Emma Enterprises was visited in Jaffna. This small company had no facilities for melting iron (brass and aluminum only). Its machine shop consisted of one lathe, one hand drill and one hand grinder. No quote for manufacturing the AID hand pump was requested here because of insufficient capabilities.

United Agro Engineering was also visited in Jaffna. Its foundry consisted of a small cupola for melting iron and a furnace for melting brass and aluminum (aluminum and brass were the principle metals used in its products with iron being poured once weekly). Its machine shop consisted of three lathes, some grinding equipment, a milling machine and a small quality control area where centrifugal pumps were tested. The AID hand pump was quoted here at $65 per pump, and it was determined that United Agro most likely could have made a quality pump if considerable external technical assistance were provided.

Auto Cycle Works was visited in Kandy. Although this company's machine shop was cluttered, it was more than adequate for AID hand pump manufacture. Its equipment consisted of lathes, milling and drilling machines, a surface

grinder and an automated saw for cutting pipe, rod and angle iron. While the machine shop inspected was very good, the foundry operations left much to be desired. There was no cupola for melting iron (crucibles were used instead). Only scrap iron was used as a raw material. The patterns that were being used were of poor quality, and it was noted that the castings being processed through the shop were circular and relatively small (the easiest to cast). The foundry itself was small and allowed only about 20 castings to be poured at one time. The management of the company estimated that the AID hand pump would be priced at approximately $75 if manufactured by Auto Cycle Works. It was not recommended that this organization undertake manufacturing the AID hand pump unless its foundry was upgraded.

Contracts and Supplies, Ltd., a holding company based in Colombo which included United Agro Engineering, had recently acquired several "Wasp" hand pumps from India retailing at $85. The "Wasp" hand pump was for both shallow and deep wells and was somewhat rugged, but would be difficult to maintain because of its complexity and its large number of working components.

It was concluded that Jinasena Ltd. was the most appropriate foundry and machine shop analyzed. However, to assure equitability in the selection of an AID hand pump manufacturer, an advertisement for letters of interest was placed in the March 16, 1980, Sunday Observer. After screening the responses to the advertisement, three additional foundries were investigated: Brown and Company, Ltd.; Walker, Sons and Company, Ltd.; and Somasiri Huller Manufactory. Of the above three companies, Somasiri Huller Manufactory was the most impressive with very high quality castings and machining. Brown and Company, and Walker, Sons and Company were found to be very large, disorganized, and lacking the quality that Somasiri Huller Manufactory exhibited.

Prior to accepting an order for manufacturing 90 AID hand pumps, Jinasena Ltd. did an in-depth study of the various pump components and prepared a revised quote at $300 per pump, which appeared unreasonably high. Meanwhile, Somasiri Huller Manufactory (SHM) had determined that its price for manufacturing the AID hand pump would be $85 for the deep-well model and

$79 for the shallow-well model. With the expectation of high quality at an attractive price, SHM was consequently selected to manufacture the AID hand pump in Sri Lanka.

It should be noted that SHM was established over 35 years ago by the father of the current owners and managers, Pathmasiri and Somasiri Dias. It began as a one-lathe rice hulling machine shop and had expanded to produce 35+ rice milling units per month with the following equipment:

Foundry:

- Three-ton cupola for cast iron
- Two jolters
- One 175 c.f.m. compressor
- Furnace for aluminum
- Oven for cores
- Woodworking shop for mold boxes
- Floor capacity for molds for 75 pumps

Machine Shop:

- Twelve lathes
- Two shapers (planers)
- One milling machine
- Two 4' radial drilling and boring machines
- Three pedestal drills
- One 8'guillotine
- One 8' segmented bender
- One 50-ton press with die cushioning attachment
- One 6' rolling machine
- Three 18" rolling machines
- One power hacksaw
- Two grinders
- Miscellaneous hand tools

Foundry Operations. A contract was signed in March 1980 with SHM for the production of 90 AID hand pumps (45 shallow-well models and 45 deep-well

models). The manufacturing process (see Appendix A) then began and consisted basically of the following sub-processes:

1. Pattern Making

Using an AID hand pump made in Indonesia and working drawings (see Appendix B) supplied by project personnel as guides to required specifications, two sets of wooden patterns and six sets of aluminum patterns were prepared. These patterns were used to make the casting molds.

2. Mold Making

Green sand molds were used to cast the various pump components. Clay/sand mixtures were used to form the cores which define the internal dimensions of the components.

3. Casting

Scrap metals of selected quality were melted down in SHM's three-ton cupola. The melt was removed from the bottom of the cupola and hand carried to the molds. Casting quality control was maintained by two methods: 1) by casting a wedge periodically during the casting process which was then broken to reveal the acceptable gray iron or the undesirable brittle white silicon deposits and 2) by visually checking the castings for blowholes which might reduce the strength of the component. SHM also had access to the laboratories of CISIR and the Ceylon Steel Corporation when more in-depth analysis was needed.

4. Machining

Approximately 7-1/2 hours were required to machine the AID hand pump components for one complete pump. The breakdown of machining and equipment used is shown in Table 2.

Table 2

COMPONENT MACHINING RATES AND EQUIPMENT

Components	Hours Required to Machine One Unit	Machines Used
Base	1.00	Lathe, radial drill
3" pipe	1.00	Lathe
Cap	1.00	Planer, grinder, drill
Body and spout	1.00	Lathe, radial drill
Handle	0.80	Planer, radial drill
Fulcrum handle	0.80	Planer, lathe
Rod end	0.40	Planer, lathe, hand tap
Rod	0.27	Lathe, radial drill
Pins	0.04	Lathe, radial drill
Bushings	0.04	Automated saw
Plunger assembly	1.00	Lathe, radial drill, hand tap

5. Brass Components

The piston (plunger) assembly was made of brass. It was cast by Russell Blom, Ltd., and machined by SHM.

6. Non-Metal Components

The leather cups for the piston assembly were supplied by the Ceylon Leather Products Corporation. The rubber for the flapper foot valves was supplied by CISIR and was cut to the proper size by SHM. The flapper valve seat was made of PVC and supplied and fitted by SHM.

Following assembly of the pumps and before delivery to the sites, each pump was checked in the factory for quality of manufacture and was individually tested on a drum of water to conclude the first phase of the project.

Pump Installation and Maintenance

Site Selection. The second phase of the project focused on installation and field testing of the AID hand pumps at selected sites around the

country. The Sri Lanka Government, represented by the Ministry of Local Government, Housing and Construction (MLGHC), helped to coordinate the selection of the well sites and assisted Georgia Tech in well reconstruction. As indicated earlier, five districts were chosen to receive pumps: Kalutara, Hambantota, Kandy, Amparai, and Jaffna. In each of these areas the MLGHC first instructed the Assistant Commissioner of Local Government (ACLG) to select a number of suitable public well sites from which Georgia Tech project personnel would make a final determination.

Thirty-nine sites (see Table 3) subsequently were chosen from a field of 130 which had been identified by ACLG officials. Site selection was based on the following criteria:

A. The hand pump scheme should be acceptable to the local community.

B. All possible sources of groundwater contamination should be at least 50 feet from the well. These include:

   1. Any sanitary facilities (latrines, septic tanks, etc.)
   2. Bathing and washing wells
   3. Agricultural fields using insecticides or fertilizers
   4. Drainage canals, fish ponds, or other water bodies.

C. The site should provide year-round water.

D. The well should be a public well located on as high a ground elevation as is practical.

E. The water should be of quality which is acceptable to the people and within WHO standards.

F. The site should be easily accessible for repair and cleaning, water quality sampling, and pump performance monitoring.

Well Construction. District engineers and technical officers were instructed in basic well construction methods and given plans which

TABLE 3. SITES SELECTED TO RECEIVE HAND PUMPS,

THEIR TOTAL DEPTH AND DIAMETERS*

SITE NO.	SITE NAME	REGION	DEPTH, FT.	DIAMETER, FT.
1	Ukwatta	Kalutara	19'6"	7'0"
2	Vettawa East	Kalutara	15'0"	4'0"
3	Vettawa West	Kalutara	14'0"	5'6"
4	Bollesagama	Kalutara	18'0"	5'6"
5	Adhikarigoda	Kalutara	12'0"	6'0"
6	Serupita	Kalutara	16'0"	7'0"
7	Liyanagoda	Kalutara	19'6"	7'0"
8	Koodapaligoda	Kalutara	21'6"	7'0"
9	Matugama A.G.A.	Kalutara	8'0"	5'6"
10	Ralua	Hambantota	29'0"	7'0"
11	Karamatiya (1DW)	Hambantota	39'0"	8'0"
12	Julampitiya	Hambantota	21'6"	7'0"
13	Oluara	Hambantota	25'0"	7'6"
14	Namaneliya	Hambantota	16'0"	7'0"
15	Ethgalmulla	Hambantota	24'6"	6'6"
16	Panburawa	Hambantota	23'6"	7'0"
17	Kadrupokuna	Hambantota	23'7"	9'6"
18	Labuhengoda (2DW)	Hambantota	34'0"	6'0"
19	Wellipitiya (4SW)	Hambantota	25'0"	8'6"
20	Andrawewa	Hambantota	15'0"	7'6"

TABLE 3 (Continued)

SITE NO.	SITE NAME	REGION	DEPTH, FT.	DIAMETER, FT.
21	Sammanthurai #2	Amparai	17'0"	5'0"
22	Karativu #1	Amparai	10'0"	6'0"
23	Karativu #2	Amparai	16'0"	5'0"
24	Periyamullativu	Amparai	14'0"	5'0"
25	Madawalanda	Amparai	17'0"	6'0"
26	Kaeselwatta	Amparai	16'6"	5'0"
27	Weheregama	Amparai	15'6"	6'0"
28	Vijayapura	Amparai	15'6"	4'6"
29	Galapaula	Amparai	20'0"	6'0"
30	Kupuliyadde	Kandy	9'0"	5 x 5 square
31	Botawatta Tikiri	Kandy	10'0"	6 x 6 square
32	Bellwood Colony	Kandy	16'0"	6 x 6 square
33	Uda Deltota	Kandy	7'0"	5 x 5 square
34	Manthuvil #1	Jaffna	14'7"	4'9"
35	Manthuvil #2	Jaffna	14'4"	4'6"
36	Kaithady	Jaffna	18'10"	11'6"
37	Fatima Church(2DW)	Jaffna	28'11"	10'8"
38	Vaddukoddai	Jaffna	18'3"	5'0"
39	Kalevaddawathai	Jaffna	17'7"	6'8"

*Note - Unless otherwise specified, all sites constructed with two shallow-well (2SW) pumps.

#DW - indicates number of deep-well pumps.
#SW - indicates number of shallow-well pumps.

established general Georgia Tech requirements. Using these plans as guidelines, the district personnel estimated construction costs, and bids were solicited from local contractors. Reviews were then made of the bids and contractors selected on the basis of cost and experience.

Construction of the wells followed with the ACLG engineers supervising the contractors and Georgia Tech personnel monitoring and reviewing the overall activity. This proved very satisfactory and enabled the program to proceed in the five chosen districts simultaneously.

The basic construction methods (see Appendix C) entailed sealing the existing hand-dug open wells with a concrete slab. Because of the costs involved, wells which were too large or in extremely poor condition were not selected. Of those selected, most were unlined, headwalls usually cracked, and aprons in poor condition. Therefore, contractors were instructed to remove the headwalls, reline and plaster the inside of the well, and cover the well with a reinforced concrete slab. Aprons were built extending five feet from the well walls to ensure proper drainage and to help prevent water seepage. Manholes were built into the slab to allow access for maintenance and repair but sealed off to prevent inflow of contaminated water.

Pump Installation. The installation procedure (see Appendix C) for shallow-well pumps was fairly simple and accomplished by one or two persons in less than an hour.

For the deep-well pump (also outlined in Appendix C), however, more manpower (three or four persons) and time (two to three hours) were needed to handle the heavy drop pipe and rod. The procedure was also very simple, but required careful measurement of drop pipe and plunger rod lengths.

Construction/Installation Costs. Each of the five districts where pumps were installed was dealt with separately with regard to well construction. In some cases construction and materials acquisition were organized directly through villages and rural development societies, while in others, by local or regional contractors. As a result, costs for each

area varied accordingly. The cost of construction in each district was dependent on the availability of building materials such as cement, steel, timber, local transport costs, and the ability of the contractors to work on more than one well site simultaneously. In some areas the contractors would construct two or more wells, while in other areas each well was rehabilitated by separate contractors.

The costs per well, as seen in Table 4, ranged from $306.29 to $541.27. These figures include all building materials such as cement, steel, sand, stone, timber, PVC pipe, labor, local transportation of materials, and overseers charges. However, they do not include the cost of the pump installed at each well (most well sites had at least two pumps installed).

Table 4

CONSTRUCTION/INSTALLATION COSTS

District	No. of Wells	No. of Pumps	Total Cost (Rs.)	Total Cost ($)*	Cost Per Well ($)
Kalutara	9	18	86,873.87	4,826.33	536.26
Hambantota	11	23	107,171.13	5,953.94	541.27
Kandy	4	8	24,903.58	1,383.53	345.88
Amparai	9	18	49,619.63	2,756.65	306.29
Jaffna	6	12	40,487.46	2,249.30	374.88
	Total Cost		309,055.67	17,169.76	

*Approximate exchange rate: Rupees 18 = U.S. $1.00.

Pump Maintenance. A major weak spot in many hand pump programs throughout the world has been the maintenance infrastructure. Although the AID pump was designed to withstand intensive use, it must be stressed that no machine, regardless of design, is truly "maintenance-free". To meet this

critical need for maintenance, the Georgia Tech team and MLGHC organized a maintenance infrastructure and a training program for village caretakers (see Appendices D and E).

During the construction phase of the project in each district, one or two village caretakers were chosen for each well and were approved by the Community Centre (CC), a voluntary citizen's organization within each community (or village).

The chief duties and functions of the caretaker were as follows:

1. Lubricating pumps on a weekly basis as shown in a maintenance manual given to the caretaker.

2. Replacing plunger cups, connecting pins and foot valves as shown in the maintenance manual on an as-needed basis.

3. Maintaining the spare parts required and contacting the Technical Officer of the local authority concerned and/or the Technical Officer of the District Development Council when the pumps needed major repairs, when there was a lack of spare leather cups, pins or foot valve flappers and/or when general advice about the pump or well was required.5/

4. Being responsible for the security of the well and the pumps.

Each caretaker was given individual instruction on procedures for maintaining and repairing AID hand pumps. This training session usually coincided with the actual installation of pumps at preselected, rehabilitated

---

5/ Each caretaker was provided with one set of pins and cups, one foot valve flapper, and a set of tools, including pliers, screwdriver and an adjustable wrench. These were kept at the home of the caretaker who was accountable to the Technical Officer for the parts and tools. When the cups, pins, or foot valve were used for repairing the pumps, the Technical Officer was notified and the caretaker was resupplied.

sites where one pump was disassembled, reassembled step-by-step, and installed by Georgia Tech personnel as a demonstration to the caretaker. During this process, each part of the pump was compared to the drawings in the maintenance manual. A second pump was then disassembled, and reassembled and installed by the caretaker under the supervision of Georgia Tech engineers. At each stumbling point, the caretaker was encouraged to consult his maintenance manual.

The maintenance manual was available to the caretaker in English, Singhalese or Tamil. It contained, as seen in Appendix E, a description of problem symptoms and their remedies, and an illustrated portion depicting the four mechanical tasks of the caretakers: lubrication, cup replacement, pin replacement, and foot valve replacement.

Pump Testing (Field and Lab)

The objectives of testing the AID hand pumps manufactured in Sri Lanka were to collect, analyze and evaluate technical data related to any problems associated with the hand pumps and to correct them quickly.

Field Testing. In the field, all defective, damaged or worn pump components were identified and the data returned to the pump manufacturer, SHM, for any necessary corrections and/or improvements. Following factory corrections/improvements, and, if necessary, rectification of the defects in the field, further field monitoring took place. Other problems, due primarily to improper installation, maintenance or repair procedures, were addressed with all levels of the maintenance infrastructure in the form of additional and/or corrective on-site training.

The following manufacturing problems and corrective measures were addressed during the field monitoring of the pumps:

1. Anchor bolt holes and pump cap/body holes not symmetrical--SHM informed and drilling jigs developed.

2. Plunger rod rubbing against rod hole in pump cap--SHM informed and drilling jigs redesigned.

3. Leak at foot valve screws in base--SHM informed, screws and taps shortened.

4. Break in handle fulcrum--SHM informed and quality control inspection procedures improved.

5. Rubber foot valves deteriorating from PVC valve seat sharpness--SHM informed, valve seat edges rounded and thicker rubber used for the valves.

6. Foot valve screws being struck by plunger assembly--SHM informed and plunger rod shortened by one inch.

7. Pump bases leaking at threaded connection--SHM informed and threading process refined, bases assembled with sealing tape.

8. Handle broken--SHM informed and quality control inspection procedures improved.

9. Sliding block wearing and causing plunger rod to rub against pump cap hole--SHM informed and cap hole elongated, lubrication procedures improved.

It also was recommended that the foot valve seats (item 5) be changed from PVC to brass on all future pumps and that a lubrication fitting be developed to further prolong the life of pins and bushings.

The effectiveness of the field monitoring feedback was shown when a final inspection tour was made in December 1981 of the five districts where 84 pumps were installed or warehoused (four additional pumps were left at CISIR and two were left with the National Housing Authority for an overall total of 90 pumps). The final distribution of these 84 pumps was as follows:

District	Shallow-Well	Deep-Well	Spares
Kalutara	18		1
Hambantota	20	3	1
Kandy	8		1
Amparai	18		1
Jaffna	10	2	1
TOTAL	74	5	5

At the time of the above inspection all pumps were found to be in good working order with the exception of five. In Kalutara one pump was found to be leaking significantly at the base thread connection due to wear and/or poor machining (this was remedied by resealing the connection with a joint compound). In Hambantota, two deep-well pumps were not operating for unknown reasons (citing previous reports of vandalism and abuse, government officials were in the process of designating alternate maintenance personnel). Two other pumps in Hambantota were inoperable due to missing parts that had been confiscated by police in connection with a domestic dispute between two villagers (one of whom was the caretaker).

In contrast, and by far the majority (74 of 79), were the remainder of the pumps which were observed to be properly maintained and widely accepted by users. The maintenance infrastructure also was reviewed at the time of the inspection tour and found to be operating smoothly.

Lab Testing. In conjunction with the field testing, laboratory tests were conducted with CISIR. The advantage of the laboratory setup was that several years of intensive use could be simulated in a short period of time and under a controlled environment.

The laboratory testing began during a crucial time in the pump manufacturing phase when several available options in the specifications of the leather cup and foot valve materials had to be narrowed down to those which would most likely give the best results in the field. A secondary purpose was to determine the relative wear rates of various pump components in an

attempt to predict which components might require the most maintenance and the greatest inventory of spare parts.

While laboratory testing has its advantages, its use to predict component durability and life in the field must be qualified. Factors such as water quality, sand, salt, cyclic wetting and drying of cups, and variations in the user's pumping strokes all affect component durability but cannot be accurately duplicated in the laboratory due to the wide variation of these factors in the field. For this reason, the laboratory testing was designed primarily as a screening test to determine which cups and valves should be considered for further field testing.

Based on the pumping rate of the test stand designed and built by Georgia Tech staff and SHM, a simulated one-year period of intensive pump use could be completed in approximately 38 days of continuous operation. More specifically, two hand pumps were installed on the test stand and were operated at an average pumping rate of 44 strokes (cycles) per minute. Utilizing a six-inch stroke inside the three-inch inside diameter cylinder allowed 11,660 gallons of water to be pumped per day. Assuming that the consumption rate per person in rural Sri Lanka was six gallons per day (determined from conversations with UNICEF/Sri Lanka personnel) and that 200 persons relied on one pump for their water needs, 1200 gallons per pump would be needed daily. Thus, one year of actual operation for each pump could be simulated in the laboratory in 37.6 days (2.4 million cycles) of continuous operation:

1200 gallons used per day x 365 days/year = 438,000 gallons

438,000 gallons ÷ 11,660 gallons per day from test stand = 37.6 days

A test procedure was established which included baseline data measurements and subsequent remeasurements at various intervals thereafter depending on the component. The items specified for data measurement were pump flow rate, valve leak rate, height of the foot valve seat, pivot pin diameters, the internal diameter of the bushings and the PVC cylinder liner,

and the width of the slider block tracks. In the event of pump failure, it was specified that the following be recorded:

(1) Which component failed,
(2) Physical dimensions of the failed component, and
(3) Probable mode of failure.

Status reports were to be submitted monthly to Georgia Tech followed by a comprehensive final report at the conclusion of the testing.

Two shallow-well pumps were mounted on the test stand which gave the pumps a 19 foot suction head. The pumps were driven by a 1/2 horsepower three-phase motor. The test stand was equipped with an automatic shut-off system which would stop the test whenever either pump quit pumping water (this was indicative of a component failure). Stroke counters attached to the stand were operated by the movement of the pump handles. Having "debugged" the test stand, the testing began on July 8, 1981.

CISIR released its first report on November 13, 1981 which covered the period from July through August 1981, and which is attached as Appendix F. The report seemed to indicate that a satisfactory rubber flapper valve had been identified but no conclusions could be drawn because of inadequate documentation.

A member of the Georgia Tech staff visited CISIR in February 1982 to gather more information on the results of the pump testing and to obtain a final report (which proved unavailable). From conversations with CISIR staff, it was learned that the rubber flapper valve identified in the November 1981 report had shown no signs of wear or deterioration over the test period. It also was learned that buffalo hide cups outperformed cowhide cups by a large margin. A brass foot valve had been slated for testing but preliminary tests revealed it leaked too much for consideration. Several bushings in the pump handles wore out prematurely from the outside in--i.e., the bushings were improperly turning inside the cast iron members instead of the pins turning in the bushings. However, the handles and bushings were replaced and this particular problem did not resurface in the lab or in the field.

The two test pumps were disassembled and inspected during the above-mentioned visit to Sri Lanka. After seven million cycles (three years of equivalent field use), the pumps, equipped with buffalo hide cups, rubber flapper valves and properly fitted pins and bushings, showed no perceptible signs of wear. It was concluded that the hand pumps were of high quality and should perform well in the field.

As with field test monitoring, SHM was kept fully informed of the lab testing results for corrections and improvements in the manufacturing process.

Well Water Quality Testing

Well water quality testing (chemical and bacteriological) was performed throughout the project with two major goals in mind:

(1) To develop baseline quality data (chemical and physical) on the water in the wells selected for development, diminishing the probability of developing water sources harmful to the public.

(2) To monitor selected wells for bacteriological recontamination after development, demonstrating the effectiveness of the hand pump from a health standpoint and aiding in the determination of disinfection frequencies necessary to provide safe water.

Tests were performed to determine the value of the following parameters in order to evaluate the potability of water in each well under consideration for development:

a. Chloride
b. Color
c. Turbidity
d. Hardness
e. Alkalinity
f. Iron
g. Manganese
h. Sulfate
i. pH
j. Nitrate and Nitrite

Regionally, Jaffna had the poorest quality water from a physicochemical standpoint with very high chloride, hardness, and alkalinity, probably due to salt water intrusion and an extensive limestone sublayer. Aside from high levels of iron and low pH levels, Kalutara had very high quality groundwater, clear and salt free. The Kandy district also had very desirable water, with slightly higher color and turbidity levels than found at Kalutara. The sites in Hambantota and Amparai were similar with some chloride evident, and fairly high sulfate, alkalinity, hardness and iron. The Hambantota sites, however, also were high in nitrate and manganese.

All sites were tested for coliforms before the wells were rehabilitated. Of the 39 wells developed, only one well was free of fecal contamination before pump installation. Following pump installation, each well was shock disinfected and retested. After shock disinfection, none of the wells showed evidence of fecal contamination.

In an attempt to study the rate of bacteriological recontamination, an extensive testing program was organized to test 15 wells in Kalutara and Hambantota. These wells were redisinfected, then tested for coliforms approximately every other week. If contamination was indicated, the contaminated well was redisinfected and monitored further. Records of contamination rates were kept for Kalutara and Hambantota and the average contamination-free periods were calculated from this data. However, these averages are not indicative of individual site results where similar conditions yielded quite varied results, perhaps from external interferences such as bucket dipping or repair operations that caused recontamination. Thus, based on the data and the test conditions, it would be very difficult to statistically justify an estimation of disinfection frequency for each district, or even for each well, without further research. Appendix G contains the details of the chemical and bacteriological testing program. Appendix H contains a listing of water quality testing equipment as well as other equipment and supplies donated to GSL at the conclusion of the program.

Villager Acceptance of Hand Pumps

Villager acceptance of the AID hand pumps manufactured and installed in Sri Lanka has been excellent. Overall, the villagers have continuously expressed their appreciation for the pumps which they explain have made drawing water from the wells much easier. Also, the villagers have understood remarkably well the sanitary significance of getting water from a protected well rather than from other sources such as rivers, fish ponds, etc. It should be noted that much of the credit for villager acceptance has been due to thorough health education briefings by Technical Officers of the ACLG prior to well rehabilitation and pump installation. As a result, vandalism of the pumps in the field has been slight.

Economic Advantages of Local Manufacture

Developments in industrialized nations such as rising oil prices and inflation have severely affected non-oil producing developing countries such as Sri Lanka with even higher inflation rates and increased costs for raw materials used in manufacturing processes. Accordingly, raw materials used in Sri Lankan hand pump production, mainly scrap iron and coke, have increased dramatically in price resulting in higher pump production costs. Originally contracted at a price of Rs 1250 or $79 (exchange rate of Rs 15.8/$1.00) per shallow-well pump and Rs 1350 or $85 per deep-well pump in March 1980, material costs later increased the price for both models to Rs 2750 or $149 (exchange rate of Rs 18.5/$1.00) per pump in May 1981.

However, this increased price is still considerably less than imported hand pumps of comparable quality (for example, the India Mark II at U.S. $350). Local manufacture has represented employment generation, increased spare parts availability and reduction of foreign exchange requirements. (A current price listing for pump components, if purchased as spares, is given in Table 5.)

Table 5

SPARE PARTS PRICE LIST

Part No.	Description	Quantity	Price* (Rs.)
SW 01	Plunger Rod	1	57.50
02	Pump Rod Nut	2	4.00
03	Rod End	1	47.50
04	Pivot Pin	2	60.00
05	Cotter Pin	6	3.00
06	Pump Cap	1	540.00
07	Pump Body	1	560.00
08	Handle	1	400.00
09	Handle Fulcrum	1	160.00
10	Bolt Hex.	4	10.00
11	Nut Hex.	4	3.00
12	Lock Washer	4	2.00
13	Plunger Assembly (double cup)	1	180.00
14	Pump Cylinder	1	175.00
15	Pump Stand (base)	1	560.00
16	Sliding Block	2	50.00
17	Machine Screw (brass)	2	7.00
18	Steel Bushing (short)	6	90.00
19	Steel Bushing (long)	3	45.00
20	Pivot Pin	1	25.00
21	Leather Cup	2	50.00
22	Valve Flapper	1	7.50
23	Valve Seat	1	7.50
24	Flapper Valve Weight	1	15.00
25	Flapper Bolt Valve	1	2.00

*Total price for quantity listed
Approximate exchange rate: Rupees 18 = US$1.00

FUTURE APPLICATIONS OF THE AID PUMP IN SRI LANKA

The very positive results generated by the AID hand pump program in Sri Lanka are evidenced by widespread interest from both the private and public sectors. For instance, an order for 380 AID pumps has already been placed by the Ministry of Plan Implementation for the Integrated Rural Development (IRD) Projects in the three districts of Kurunegala, Matale and Puttalam. In addition, IRD Projects at Badulla, Nuwara Eliya, Galle, Kandy and Kegalle will include approximately 600 wells. All of these sites will utilize the AID hand pump.

A substantial number of community wells are also planned under rural water supply projects financed by bilateral donors in 1982. Approximately 500 wells are included in the Matale and Polonnaruwa Districts under the DANIDA rural water supply and sanitation project. A Finnish project, also expected to commence in 1982 for the Harispattuwa electorate, will include 300 to 400 wells. Both of these bilateral donors have been informed of the AID pump and its endorsement by the MLGHC.

Well programs are being implemented in Sri Lanka by the Mahaweli Ministry, UNICEF, other voluntary organizations and numerous local and regional community groups. As a result, Mr. Harold Fernando, Senior Assistant to the Secretary of the MLGHC, has estimated that there are 20,000 open wells now and an annual need for 2000 hand pumps until 1984 when the demand is expected to increase to 3000 and then to 4000 annually from 1985 onwards until a total of some 40,000 pumps have been installed.

Based on the present price of the AID hand pump (approximately U.S. $150) compared to the cost of its nearest comparable competitor (the India MK II at U.S. $350), the benefits in direct savings and reduced foreign spending are readily apparent. Coupled with the incentives of the expected market demand, it is not difficult to envision the opportunities available to potential manufacturers. In fact, a number of private concerns have expressed a serious interest in producing the AID hand pump in Sri Lanka although no assessment of their manufacturing capabilities has been made by Georgia Tech staff.

PREVIOUS PAGE BLANK

Importantly, the AID hand pump program has permitted the Government of Sri Lanka to implement its decade plan for rural water through a rapid impact approach that allows present installation of hand pumps while preparing for longer term design and construction of piped water supply systems in more densely populated areas.

Appendix A
MANUFACTURING

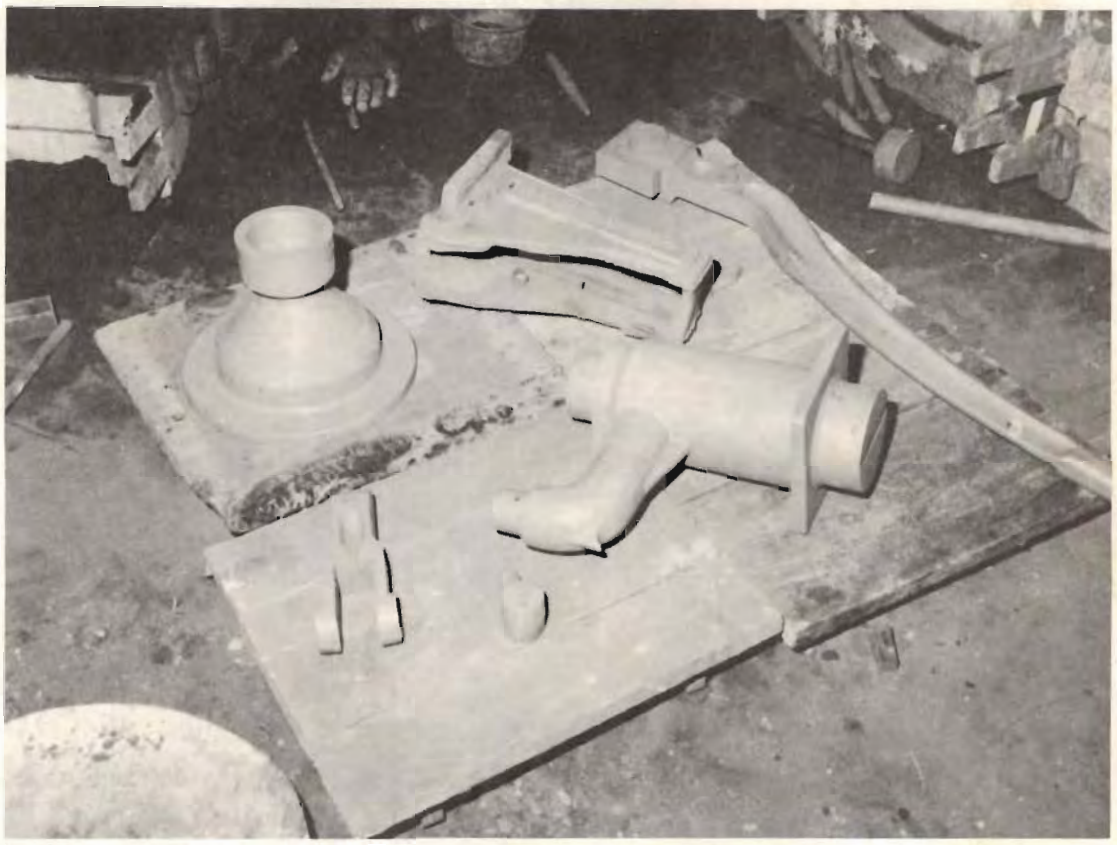

Figure 6. Pump Patterns

The first step in the manufacturing process is pattern making. Scaled drawings are used to make wooden patterns from which aluminum patterns (above photo) are prepared for durability. The cap and handle patterns are more difficult to fabricate because of their complex shapes. A second pattern, which is called the core, is made to fit the cavity of the pump. Since the core is surrounded by hot metal during forming, it must be made of a special sand with a high silica content.

PREVIOUS PAGE BLANK

Figure 7. Mold Preparation

The next, and a most important step, is preparing the molds. If this is not done correctly, a defective casting may be produced. Thus, a top quality sand, especially adapted for foundries, must be used. The molds are prepared by hand in a wooden box laid on a plank. The molding sand is then placed around the pattern and tamped until firm.

Each mold is prepared in two halves with double pins (except the cap mold which is in three pieces), and the halves are carefully aligned to form the complete cavity. A pour hole is made by putting a round tapered stick through the cavity and inserting a paper pour cup. If a core is being used, it is put in the mold before the halves are joined.

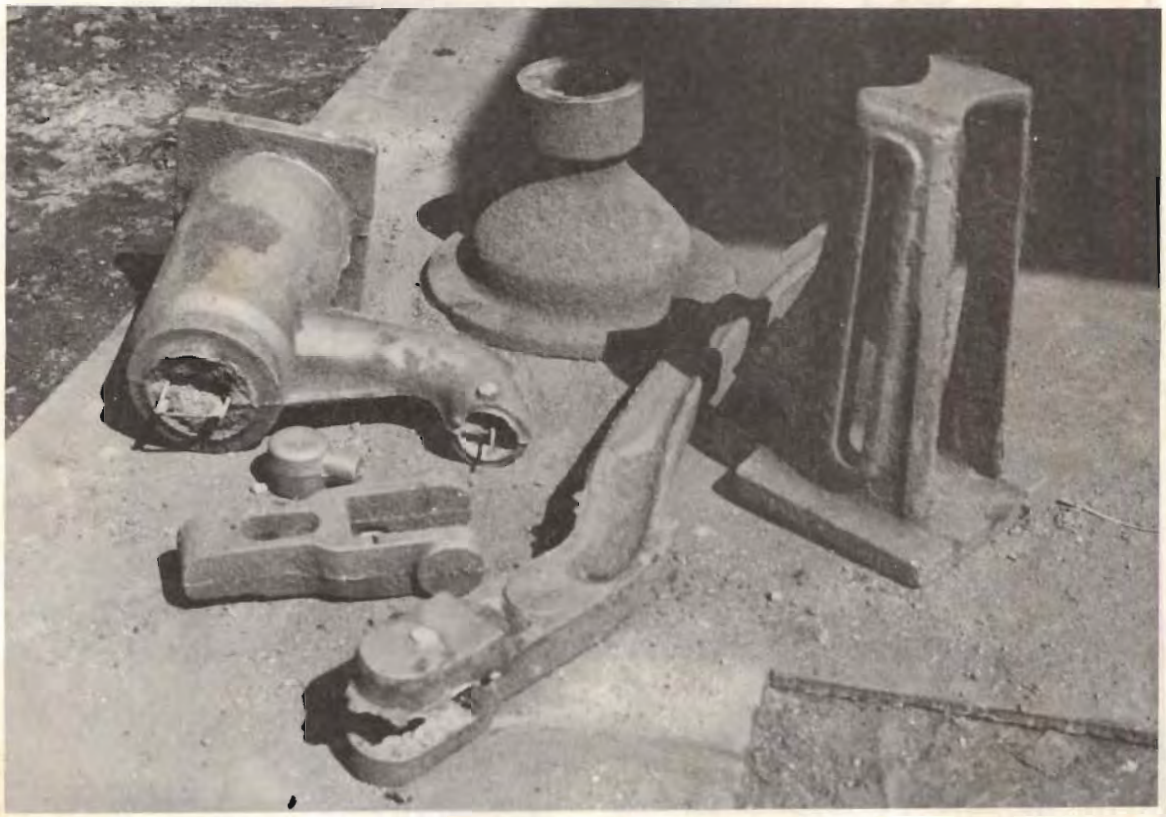

Figure 10. Cast Parts From Mold

After the metal has cooled and solidified, the mold is broken apart to remove the castings. The cores and molding sand are then shaken from the castings.

PAGES 43 and 44
are MISSING

Figure 11. Machining the Pump Cap

The casting is prepared for machining by removing excess pieces of metal and sand, then metal protrusions are ground off and flat surfaces planed. The parts are then bored, drilled and threaded using lathes and drill presses. Jigs are used to ensure interchangeability of parts such as the pump cap, body and base. The pump is then assembled, painted with a primer and overcoat, and tested over a 55-gallon drum of water.

Figure 12. Testing of Pump in Foundry

Before any pumps are released from the manufacturer, they must be tested over a 55-gallon drum of water for certification that all parts easily move together and that the piston assembly and foot valve are properly functioning.

Appendix B

AID HAND PUMP SHOP DRAWINGS

PREVIOUS PAGE BLANK

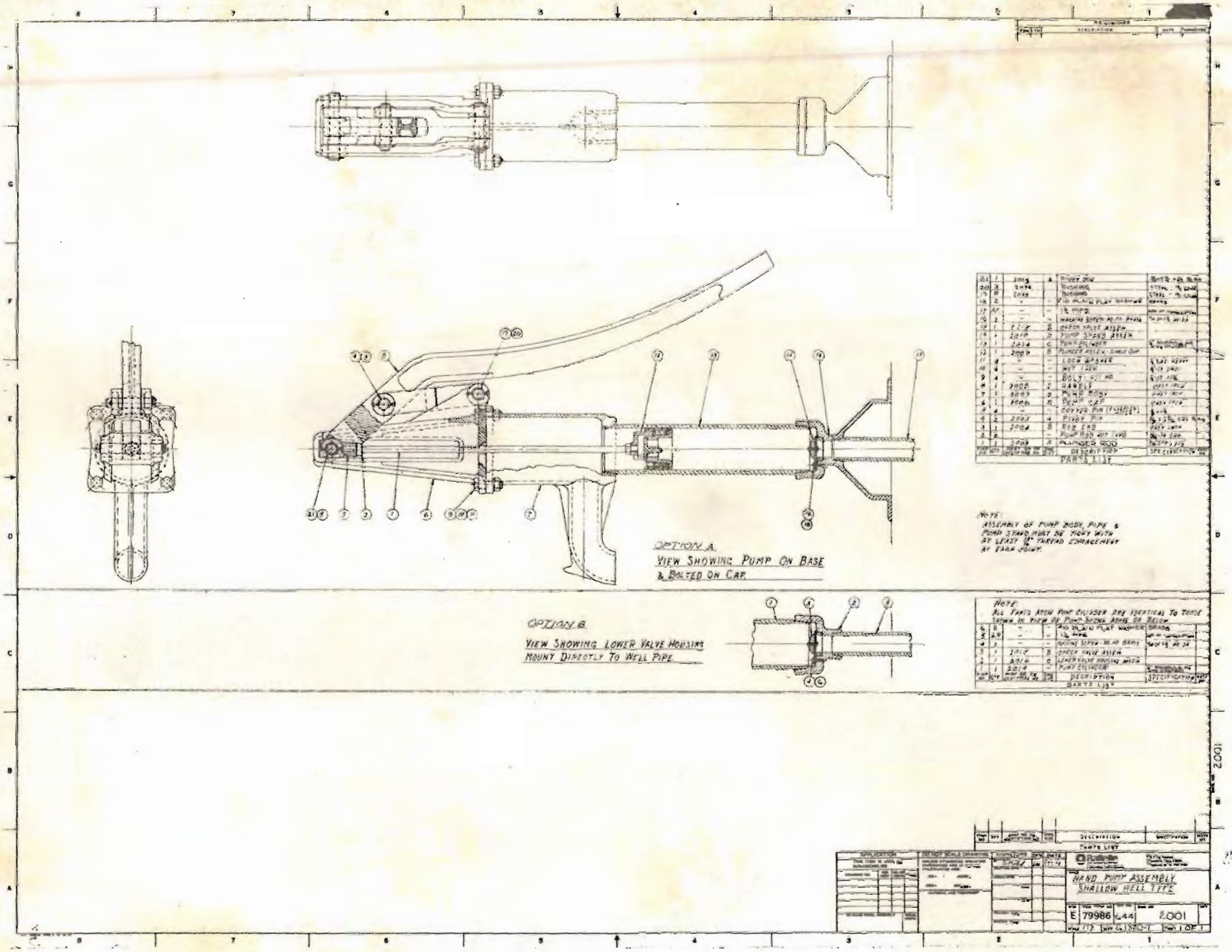

PREVIOUS PAGE BLANK

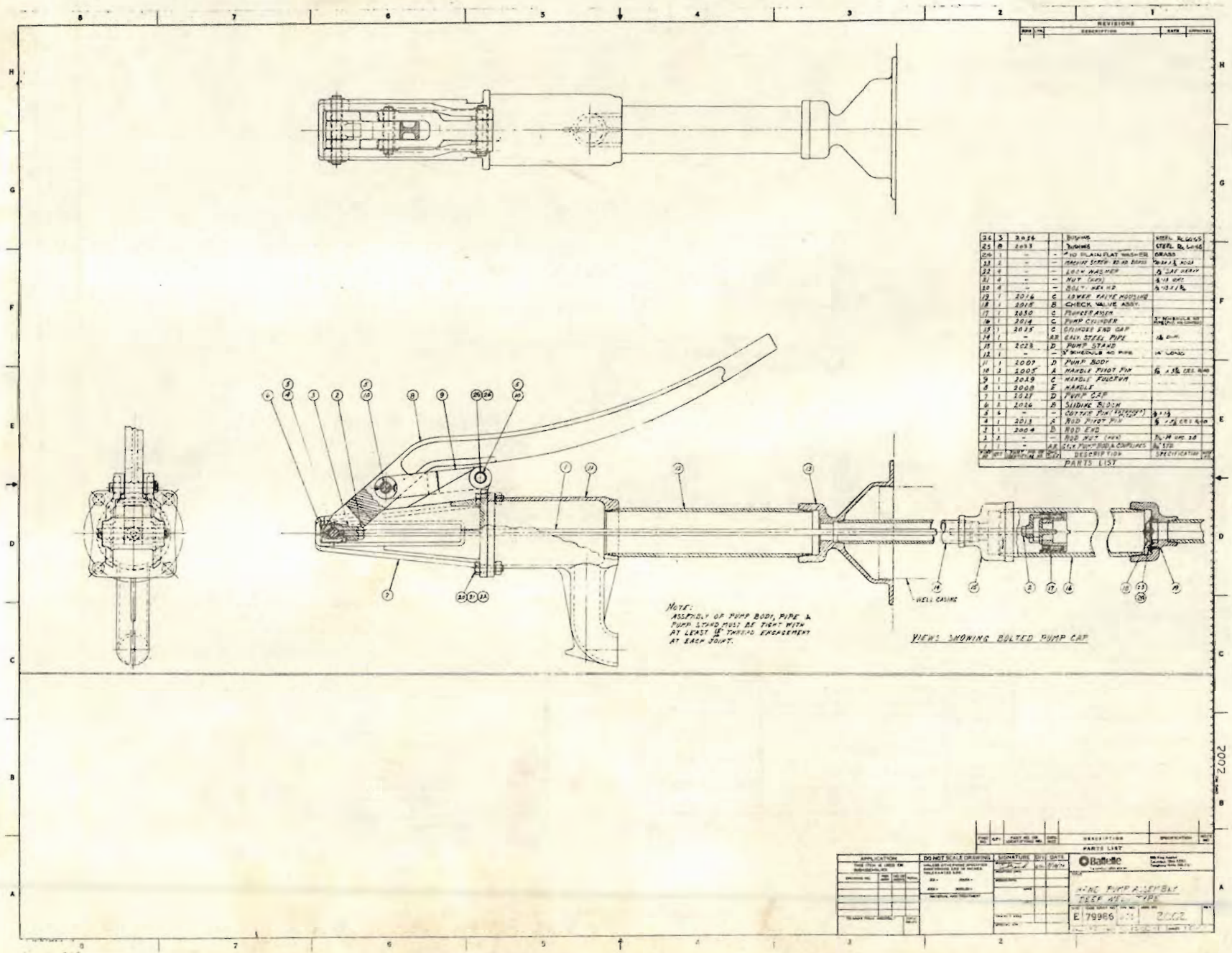
REVISIONS
PARTS LIST
WELL CASING
NOTE:
ASSEMBLY OF PUMP BODY, PIPE & PUMP STAND MUST BE TIGHT WITH AT LEAST 1½" THREAD ENGAGEMENT AT EACH JOINT.
VIEWS SHOWING BOLTED PUMP CAP
Battelle
E 79986
2002

REVISIONS			
LTR	DESCRIPTION	DATE	APPROVED

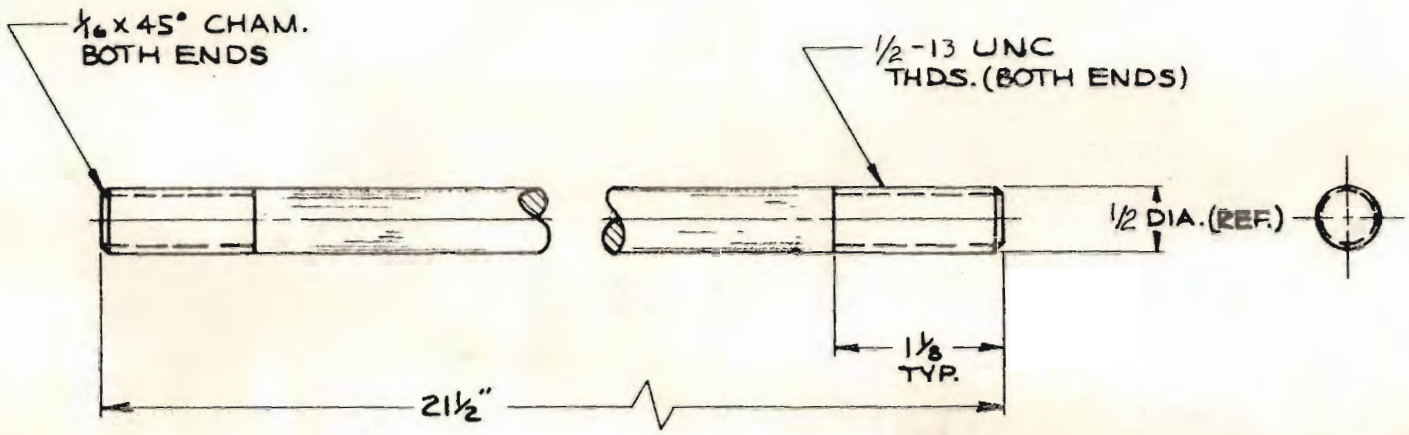

APPLICATION			
THIS ITEM IS USED ON SUBASSEMBLIES			
DRAWING NO.	PER ASSY	NO. OF ASSYS	TOTAL
2001	1	1	1
TO MAKE FINAL ASSEMBLY			TOTAL REQ'D.

DO NOT SCALE DRAWING

UNLESS OTHERWISE SPECIFIED DIMENSIONS ARE IN INCHES. TOLERANCES ARE: ± 1/32

.XX = - .XXXX = -

.XXX = - ANGLES = ± 1/2°

MATERIAL & TREATMENT

1/2" DIA. GALV. PUMP ROD

SIGNATURE	DIV.	DATE
DRAWN BY	620	1-7-75
DRAFTING APPD.		
DESIGN APPD.		
APPD.		
PROJECT APPD.		
SPECIAL APPD.		

BATTELLE MEMORIAL INSTITUTE
COLUMBUS LABORATORIES
505 KING AVE., COLUMBUS, OHIO 43201

TITLE PLUNGER ROD

SIZE	CODE IDENT. NO.	DIV. NO.	DWG. NO.	REV.
A	79986	644	2003	

SCALE 1" = 1" ACCT. G1320-1 SHEET 1 OF 1

CAT. 224163 FORM D-5 5-70

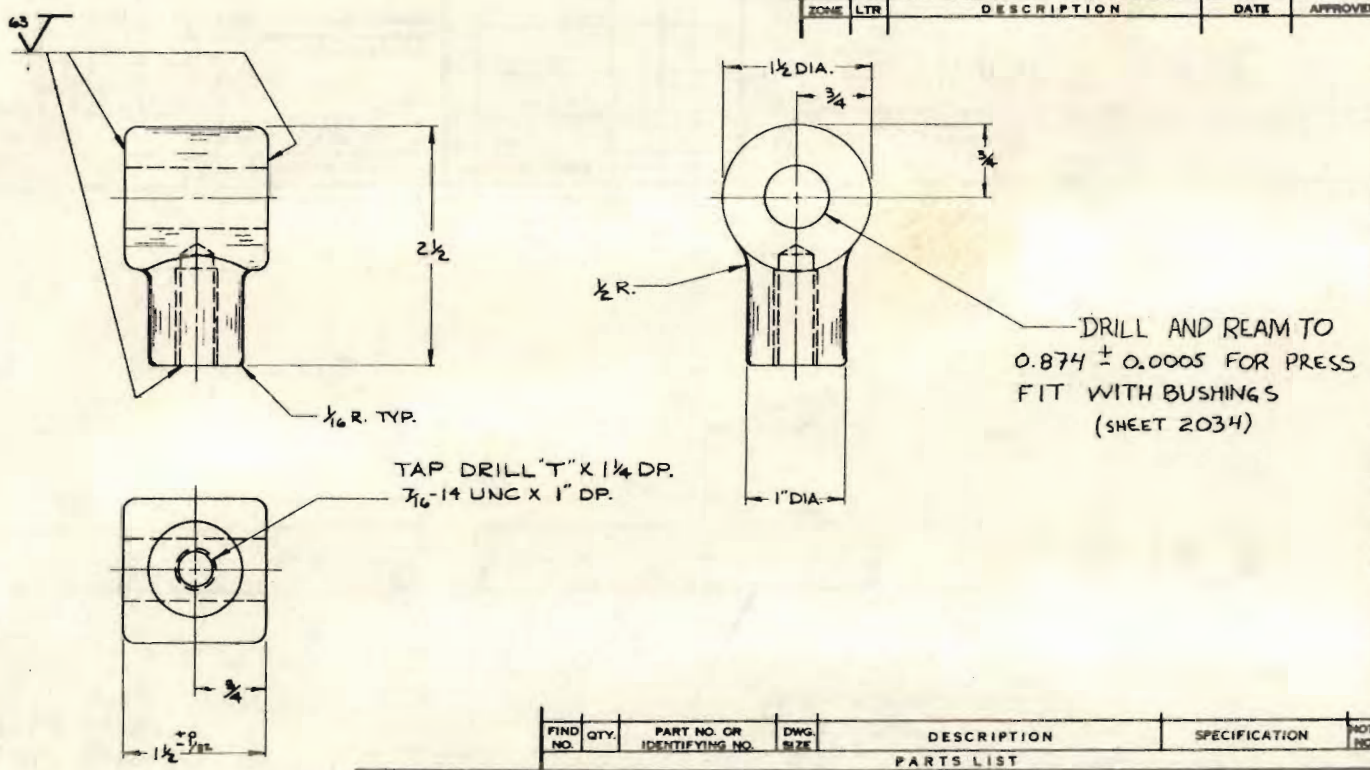

NOTES:

1. ALL DRAFT ANGLES TO BE 1½° TO 4°
2. ALL FILLETS & RADII TO BE ⅛" R. UNLESS OTHERWISE SPECIFIED

REVISIONS				
ZONE	LTR	DESCRIPTION	DATE	APPROVED

FIND NO.	QTY.	PART NO. OR IDENTIFYING NO.	DWG. SIZE	DESCRIPTION	SPECIFICATION	NOTE NO.

PARTS LIST

APPLICATION				
THIS ITEM IS USED ON ASSEMBLIES				
DRAWING NO.	PER ASSY	NO. OF ASSYS	TOTAL	
2001	1	1	1	
2002	1	1	1	
TO MAKE FINAL ASSEMBLY				TOTAL REQ'D.

DO NOT SCALE DRAWING

UNLESS OTHERWISE SPECIFIED DIMENSIONS ARE IN INCHES. TOLERANCES ARE: ± 1/32

.XX = ± .XXX = ±

.XXX = ± ANGLES = ±

MATERIAL & TREATMENT

CAST IRON

SIGNATURE	DIV.	DATE
DRAWN BY	659	1-8-78
DRAFTING APPD.		
DESIGN APPD.		
APPD		
PROJECT APPD.		
SPECIAL APPD.		

Battelle Columbus Laboratories
505 King Avenue
Columbus, Ohio 43201
Telephone (614) 299-3151

TITLE: ROD END

SIZE	CODE IDENT. NO.	DIV. NO.	DWG. NO.	REV.
B	79986	644	2004	

SCALE 1" = 1" ACCT. G1320-1 SHEET 1 OF 1

CAT. 8041 BS FORM D-Y 12-72

REVISIONS			
LTR	DESCRIPTION	DATE	APPROVED

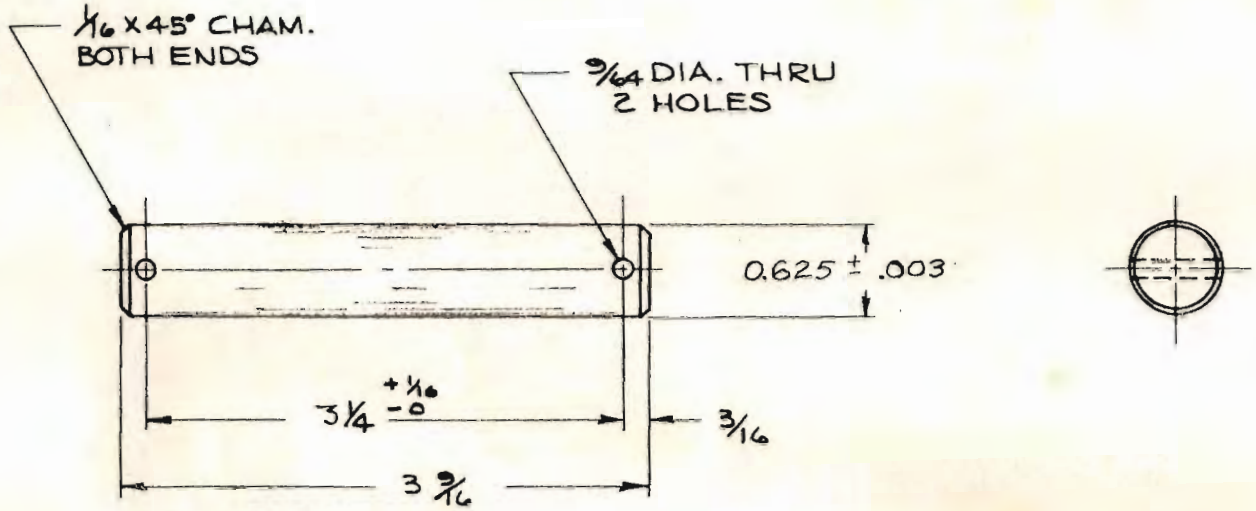

APPLICATION			
THIS ITEM IS USED ON ASSEMBLIES			
DRAWING NO.	PER ASSY	NO. OF ASSYS	TOTAL
2002	2	1	2
2001 "A"	2	1	2
TO MAKE FINAL ASSEMBLY			TOTAL REQ'D

DO NOT SCALE DRAWING

UNLESS OTHERWISE SPECIFIED DIMENSIONS ARE IN INCHES. TOLERANCES ARE: ±1/32

.XX = — .XXXX = —

.XXX = — ANGLES = ±1/2°

MATERIAL & TREATMENT
5/8 DIA. C.R.S. ROUND
HARDEN TO RC 40

SIGNATURE	DIV.	DATE
DRAWN BY	659	1-7-74
DRAFTING APPD.		
DESIGN APPD.		
APPD.		
PROJECT APPD.		
SPECIAL APPD.		

BATTELLE MEMORIAL INSTITUTE
COLUMBUS LABORATORIES
505 KING AVE., COLUMBUS, OHIO 43201

TITLE HANDLE PIVOT PIN

SIZE	CODE IDENT. NO.	DIV. NO.	DWG. NO.	REV.
A	79986	644	2005	

SCALE 1" = 1" ACCT. G1320-1 SHEET 1 OF 1

CAT. 294163 FORM D-S 5-70

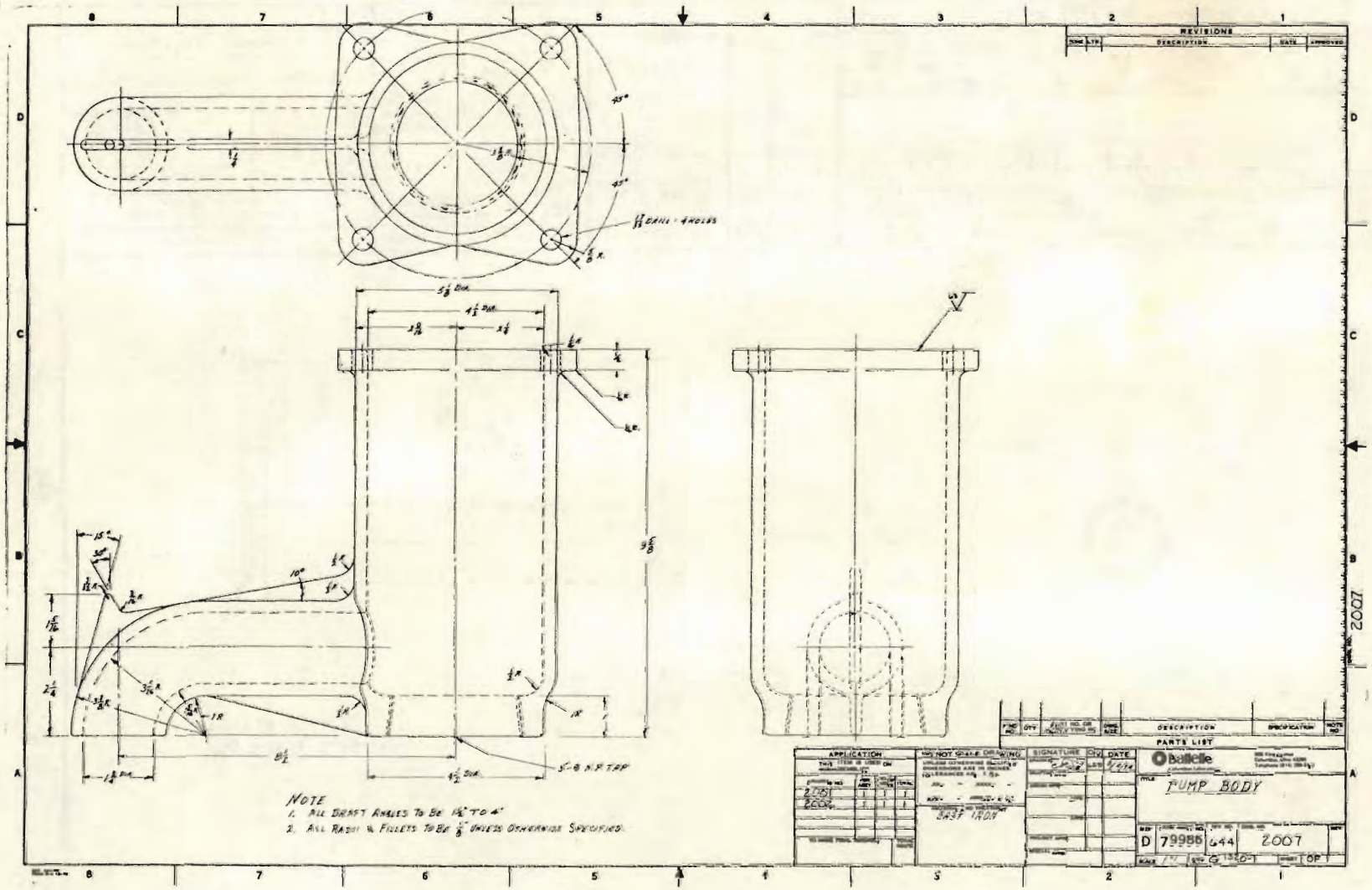
REVISIONS
DESCRIPTION
DATE
APPROVED
PARTS LIST
DESCRIPTION
SPECIFICATION
APPLICATION
DO NOT SCALE DRAWING
SIGNATURE
DATE
Battelle
PUMP BODY
D 79986 644 2007
CAST IRON
NOTE
1. ALL DRAFT ANGLES TO BE 1½° TO 4°
2. ALL RADII & FILLETS TO BE ⅛" UNLESS OTHERWISE SPECIFIED.
5-8 N.P. TAP
2007

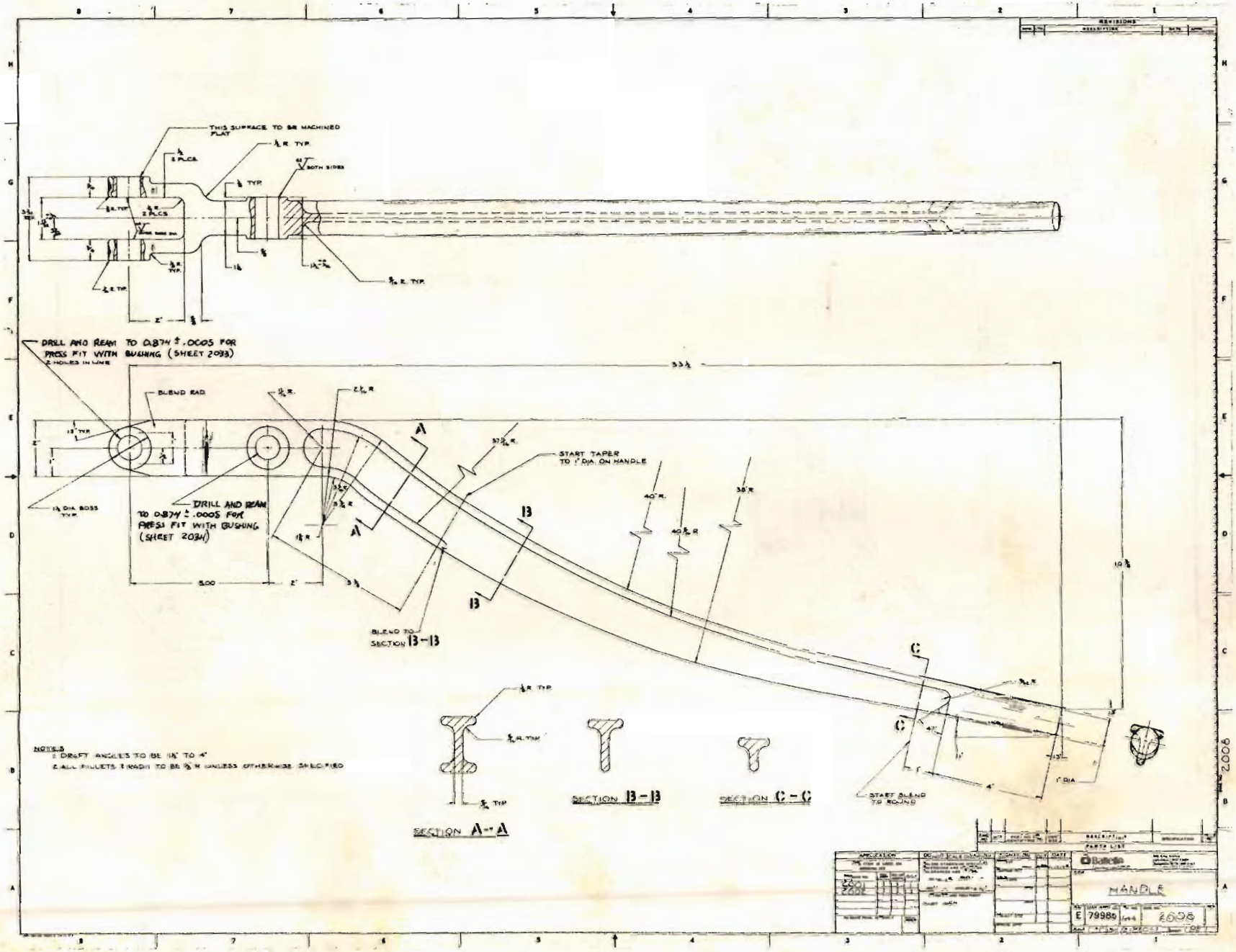
THIS SURFACE TO BE MACHINED FLAT
BOTH SIDES
DRILL AND REAM TO 0.874 ± .0005 FOR PRESS FIT WITH BUSHING (SHEET 2038)
2 HOLES IN LINE
BLEND RAD
START TAPER TO 1" DIA ON HANDLE
DRILL AND REAM TO 0.874 ± .0005 FOR PRESS FIT WITH BUSHING (SHEET 2034)
BLEND TO SECTION B-B
START BLEND TO ROUND
1" DIA
SECTION A-A
SECTION B-B
SECTION C-C
NOTES
1. DRAFT ANGLES TO BE 1½° TO 4°
2. ALL FILLETS & RADII TO BE 3/8" R UNLESS OTHERWISE SPECIFIED
REVISIONS
PARTS LIST
HANDLE
E 79985
2008

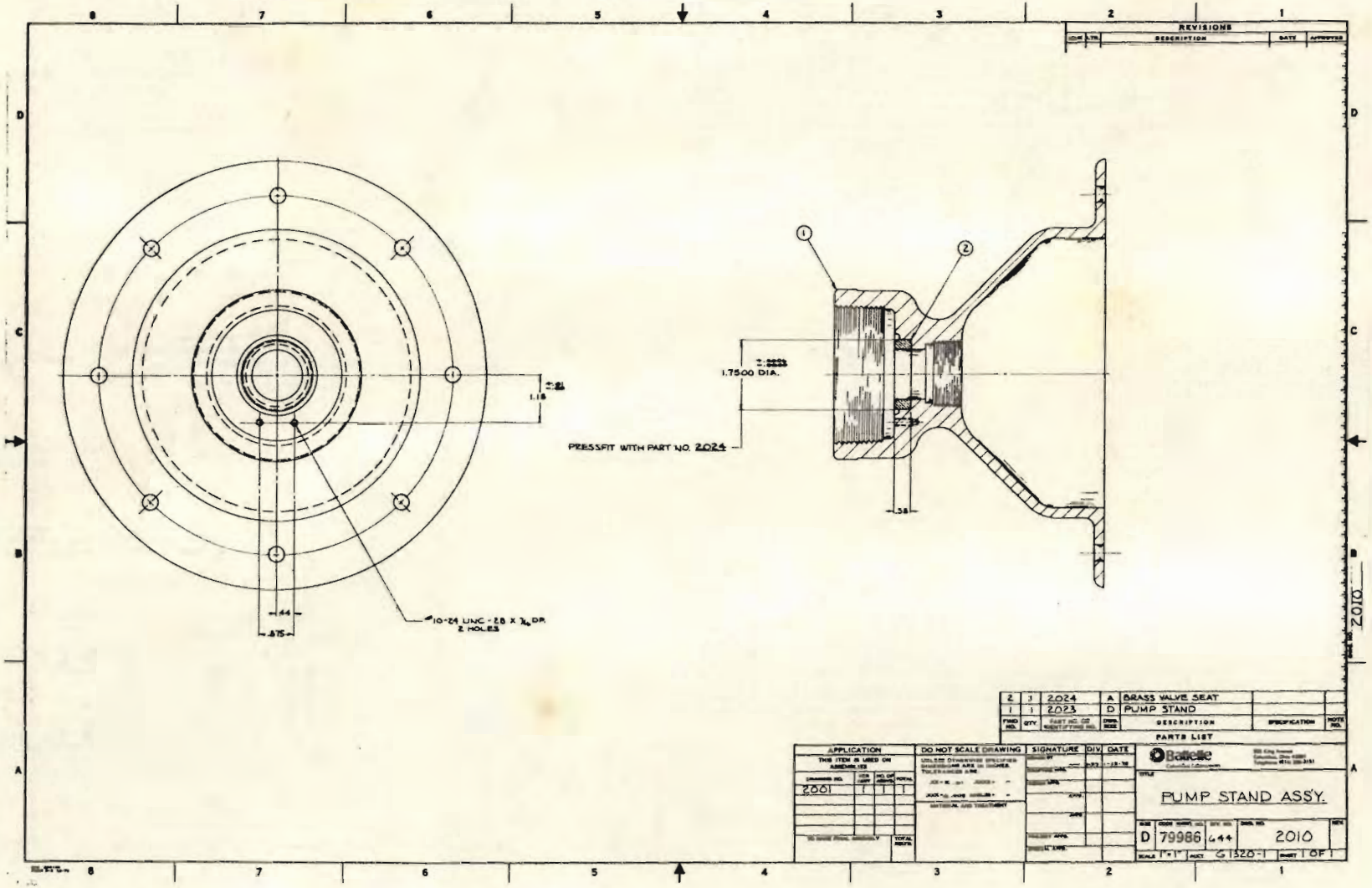
REVISIONS
DESCRIPTION
DATE
APPROVED
1.18
.44
.875
#10-24 UNC-2B X 3/4 DP
2 HOLES
1.7500 DIA.
PRESSFIT WITH PART NO. 2024
.38
2010
2 3 2024 A BRASS VALVE SEAT
1 1 2023 D PUMP STAND
FIND NO. QTY PART NO. OR IDENTIFYING NO. DWG. SIZE DESCRIPTION SPECIFICATION NOTE NO.
PARTS LIST
APPLICATION
THIS ITEM IS USED ON
2001
DO NOT SCALE DRAWING
SIGNATURE DIV DATE
Battelle
PUMP STAND ASS'Y.
D 79986 44 2010
SCALE 1"=1" PROJ. G1520-1 SHEET 1 OF 1

REVISIONS			
LTR	DESCRIPTION	DATE	APPROVED

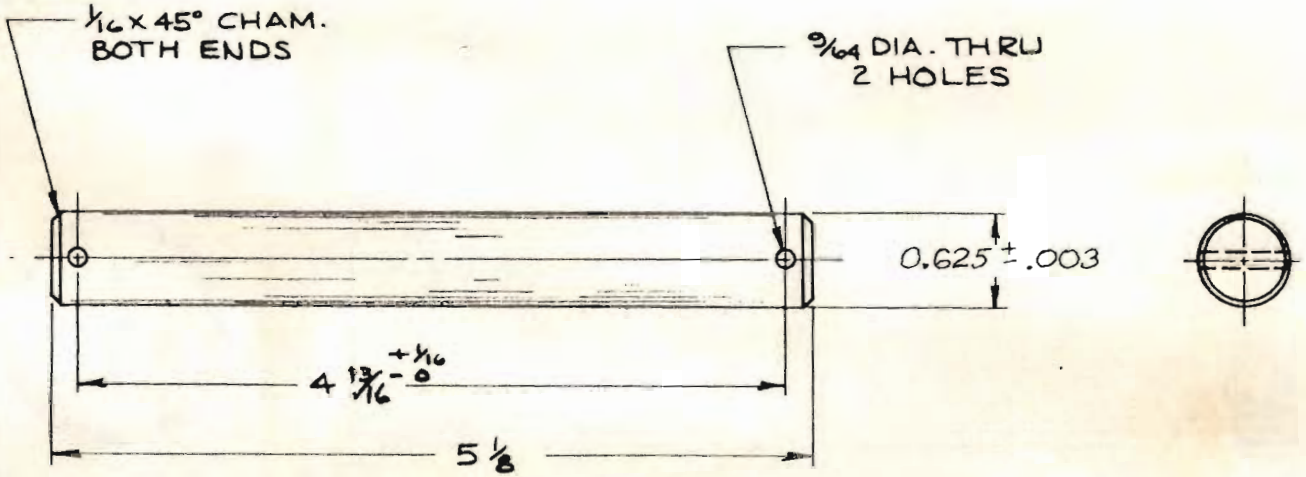

APPLICATION			
THIS ITEM IS USED ON SUBASSEMBLIES			
DRAWING NO.	PER ASSY	NO. OF ASSYS	TOTAL
2001 "A"	1	1	1
2002	1	1	1
TO MAKE FINAL ASSEMBLY			TOTAL REQ'D.

DO NOT SCALE DRAWING

UNLESS OTHERWISE SPECIFIED DIMENSIONS ARE IN INCHES. TOLERANCES ARE: ± 1/32

.XX = .XXXX = —

.XXX = — ANGLES = ± 1/2°

MATERIAL & TREATMENT
5/8 C.R.S. ROUND
HARDEN TO R_c 40

SIGNATURE	DIV.	DATE
DRAWN BY		1-7-75
DRAFTING APPD.		
DESIGN APPD.		
APPD.		
PROJECT APPD.		
SPECIAL APPD.		

BATTELLE MEMORIAL INSTITUTE
COLUMBUS LABORATORIES
505 KING AVE., COLUMBUS, OHIO 43201

TITLE ROD PIVOT PIN

SIZE	CODE IDENT. NO.	DIV. NO.	DWG. NO.	REV.
A	79986	644	2013	

SCALE 1" = 1" ACCT. G1320-1 SHEET 1 OF 1

CAT. 894163 FORM D-S 5-79

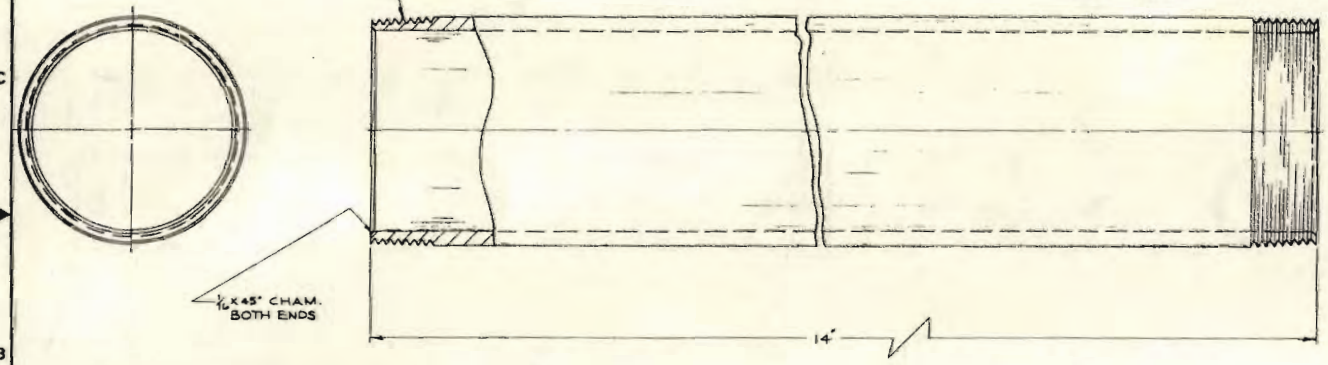

NOTE:
PIPE MAY BE MADE OF EITHER OF THE FOLLOWING MATERIALS FOR 3" CYLINDERS.
— FOR DEEP WELL PUMP; STD PVC 1120 PLASTIC PIPE (SCH 40)
— FOR DEEP OR SHALLOW WELL PUMP; PVC PIPE TO BE USED AS A LINER INSIDE A 3" GALVANIZED STEEL PIPE

REVISIONS

ZONE	LTR.	DESCRIPTION	DATE	APPROVED

FIND NO.	QTY.	PART NO. OR IDENTIFYING NO.	DWG. SIZE	DESCRIPTION	SPECIFICATION	NOTE NO.

PARTS LIST

APPLICATION				DO NOT SCALE DRAWING	SIGNATURE	DIV.	DATE
THIS ITEM IS USED ON ASSEMBLIES				UNLESS OTHERWISE SPECIFIED DIMENSIONS ARE IN INCHES. TOLERANCES ARE: ± 1/32.	DRAWN BY	655	1-14-74
DRAWING NO.	PER ASSY	NO. OF REQ'D	TOTAL	.XX± – .XXX± –	SHAPTONS APPD.		
2001	1	1	1	.XXX± – ANGLES± ±	SHOP APPD.		
2002	1	1	1	MATERIAL AND TREATMENT	APPD.		
				NOTED	APPD.		
TO MAKE FINAL ASSEMBLY			TOTAL REQ'D.		PROJECT APPD.		
					SPECIAL APPD.		

Battelle
Columbus Laboratories
505 King Avenue
Columbus, Ohio 43201
Telephone (614) 299-3151

TITLE: PUMP CYLINDER

SIZE	CODE IDENT. NO.	DIV. NO.	DWG. NO.	REV.
C	79986	644	2014	

SCALE 1" = 1" | ACCT. G1320-1 | SHEET 1 OF 1

DWG. NO. 2014

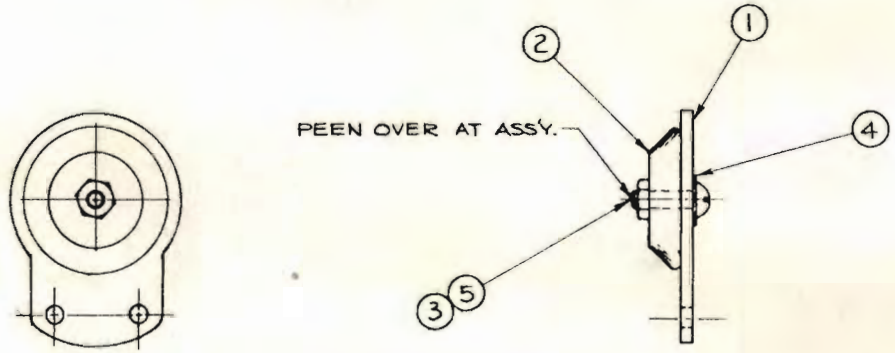

REVISIONS				
ZONE	LTR	DESCRIPTION	DATE	APPROVED

FIND NO.	QTY.	PART NO. OR IDENTIFYING NO.	DWG. SIZE	DESCRIPTION	SPECIFICATION	NOTE NO.
5	1	–	–	#10 NC-2B HEX NUT	BRASS	
4	1	–	–	#10 PLAIN FLAT WASHER	BRASS	
3	1	–	–	#10-24 NC-2A X ¾ LONG RD. HD SCR.	BRASS	
2	1	2022	A	CHECK VALVE WEIGHT	CAST IRON	
1	1	2021	B	VALVE FLAPPER	RUBBER	

PARTS LIST

APPLICATION			
THIS ITEM IS USED ON ASSEMBLIES			
DRAWING NO	PER ASSY	NO. OF ASSY'S	TOTAL
2001	1	1	1
2002	1	1	1
TO MAKE FINAL ASSEMBLY			TOTAL REQ'D.

DO NOT SCALE DRAWING

UNLESS OTHERWISE SPECIFIED DIMENSIONS ARE IN INCHES. TOLERANCES ARE:

.XX = .XXXX =

.XXX = ANGLES=

MATERIAL & TREATMENT

SIGNATURE	DIV.	DATE
DRAWN BY		
DRAFTING APPD.		
DESIGN APPD.		
APPD.		
PROJECT APPD		
SPECIAL APPD		

Battelle Columbus Laboratories
505 King Avenue
Columbus, Ohio 43201
Telephone (614) 299-3151

TITLE

CHECK VALVE ASS'Y.

SIZE	CODE IDENT. NO	DIV. NO.	DWG. NO.	REV.
B	79986	644	2015	

SCALE 1" = 1" ACCT SHEET 1 OF 1

CAT. 8941 08
FORM D-7 12-73

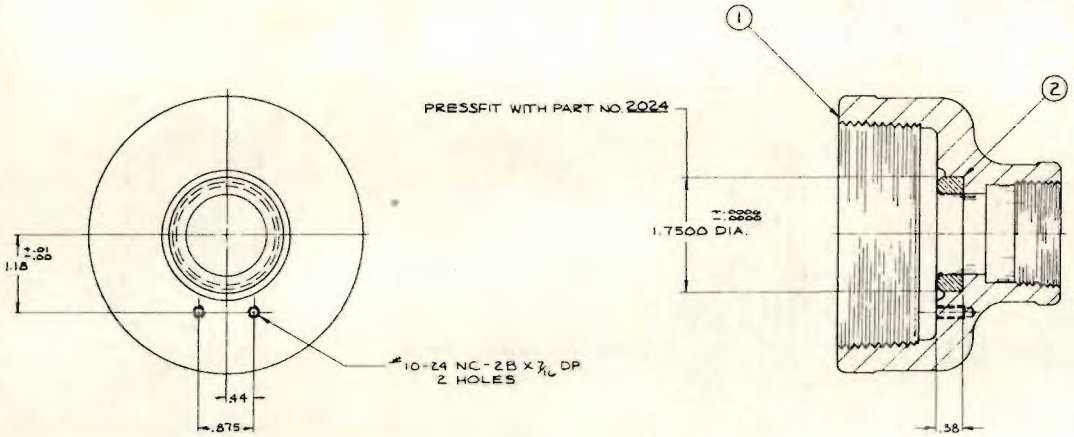

REVISIONS

ZONE	LTR.	DESCRIPTION	DATE	APPROVED

FIND NO.	QTY.	PART NO. OR IDENTIFYING NO.	DWG. SIZE	DESCRIPTION	SPECIFICATION	NOTE NO.
2	1	2024	A	BRASS VALVE SEAT		
1	1	2025	C	CYLINDER END CAP		

PARTS LIST

APPLICATION			
THIS ITEM IS USED ON SUBASSEMBLIES			
DRAWING NO.	PER ASSY	NO. OF ASS'YS	TOTAL
2001	1	1	1
2002	1	1	1
TO MAKE FINAL ASSEMBLY			TOTAL REQ'D.

DO NOT SCALE DRAWING

UNLESS OTHERWISE SPECIFIED DIMENSIONS ARE IN INCHES. TOLERANCES ARE:

XX = ± .01 XXXX = –

XXX = ± .005 ANGLES = –

MATERIAL AND TREATMENT

SIGNATURE	DIV.	DATE
DRAWN BY	659	1-14-75
DRAFTING APPD.		
DESIGN APPD.		
APPD.		
APPD.		
PROJECT APPD.		
SPECIAL APPD.		

Battelle
Columbus Laboratories
505 King Avenue
Columbus, Ohio 43201
Telephone (614) 299 3151

TITLE

LOWER VALVE HOUSING ASS'Y.

SIZE	CODE IDENT. NO.	DIV. NO.	DWG. NO.	REV.
C	79986	644	2016	

SCALE 1" = 1" ACCT. G1320-1 SHEET 1 OF 1

DWG NO. 2016

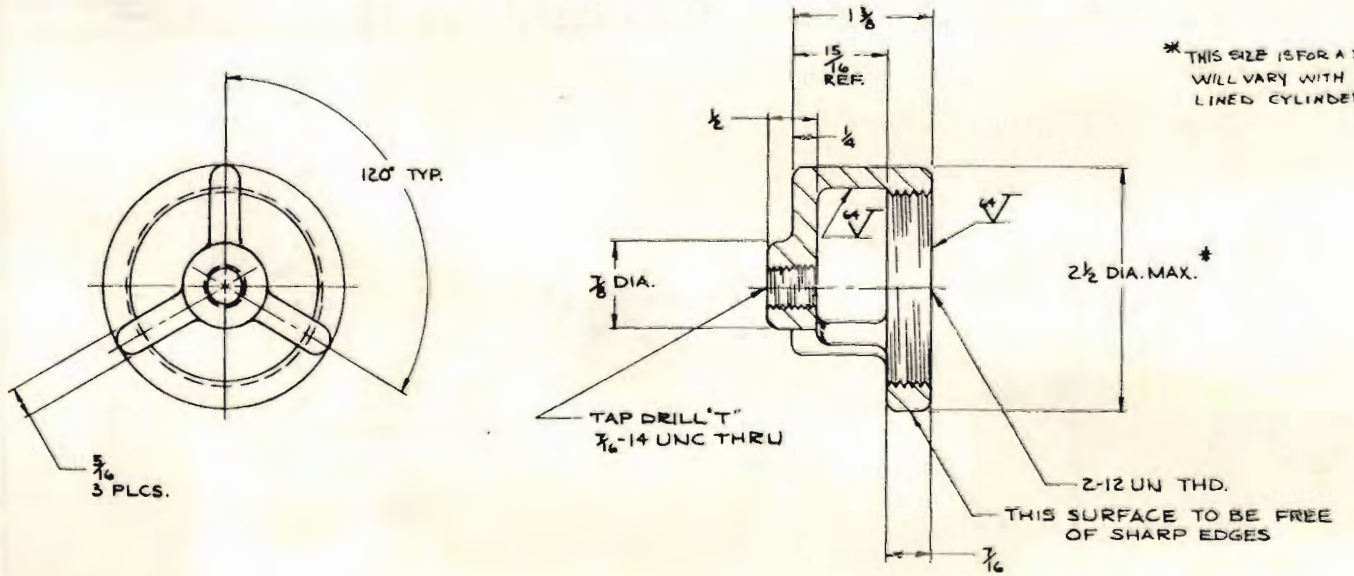

* THIS SIZE IS FOR A 3" ID CYLINDER AND WILL VARY WITH THE ID OF THE PVC LINED CYLINDER.

NOTES:
1. ALL DRAFT ANGLES TO BE 1½° TO 4°
2. ALL FILLETS & RADII TO BE ⅛" R. UNLESS OTHERWISE SPECIFIED

REVISIONS				
ZONE	LTR	DESCRIPTION	DATE	APPROVED

FIND NO.	QTY.	PART NO. OR IDENTIFYING NO.	DWG SIZE	DESCRIPTION	SPECIFICATION	NOTE NO.

PARTS LIST

APPLICATION				
THIS ITEM IS USED ON SUBASSEMBLIES				
DRAWING NO.	PER ASSY	NO OF ASSYS	WITH	
2030	1	1	1	
TO MAKE FINAL ASSEMBLY				TOTAL PARTS

DO NOT SCALE DRAWING
UNLESS OTHERWISE SPECIFIED TOLERANCES ARE AS FOLLOWS: .XX = ±1/32, .XXX = ±1/64, .XXXX = ANGLES ±1/2°

MATERIAL & TREATMENT: BRASS

SIGNATURE	DIV	DATE
DRAWN BY		
DRAFTING APPD.		
DESIGN APPD.		
APPD.		
PROJECT APPD.		
SPECIAL APPD.		

Battelle Columbus Laboratories
505 King Avenue
Columbus, Ohio 43201
Telephone (614) 299-3151

TITLE: PLUNGER CAGE

SIZE	CODE IDENT. NO.	DIV. NO.	DWG. NO.	REV.
B	79986	644	2017	

SCALE 1" = 1" | ACCT G1320-1 | SHEET 1 OF 1

NOTES:

1. ALL DRAFT ANGLES TO BE 1½° TO 4°
2. ALL FILLETS & RADII TO BE ⅛" R. UNLESS OTHERWISE SPECIFIED

REVISIONS			
LTR	DESCRIPTION	DATE	APPROVED

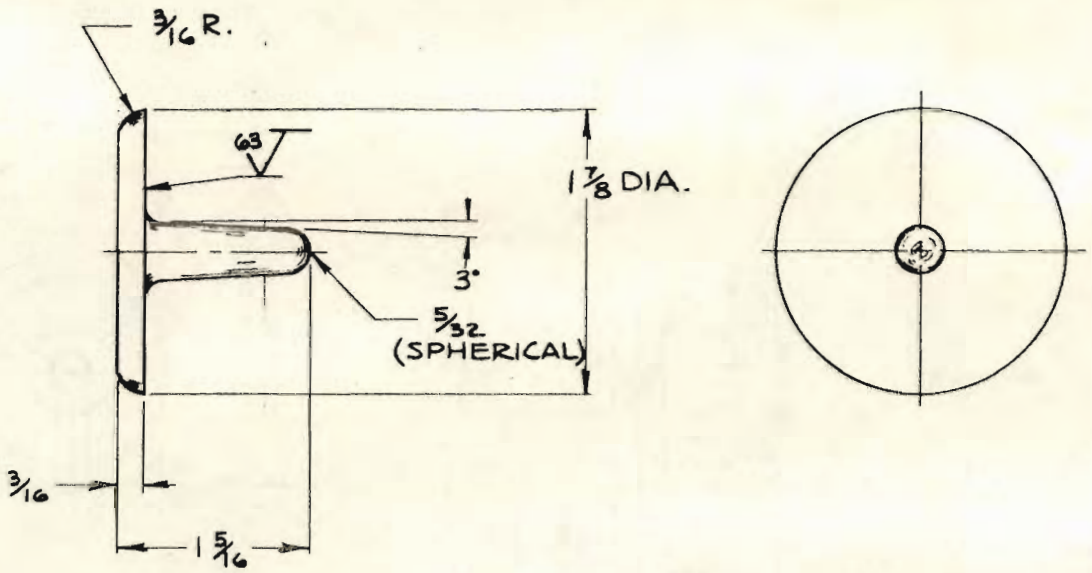

APPLICATION			
THIS ITEM IS USED ON SUBASSEMBLIES			
DRAWING NO.	PER ASSY	NO. OF ASSYS	TOTAL
2030	1	1	1
TO MAKE FINAL ASSEMBLY			TOTAL REQ'D.

DO NOT SCALE DRAWING

UNLESS OTHERWISE SPECIFIED DIMENSIONS ARE IN INCHES. TOLERANCES ARE: ± 1/32.

.XX = – .XXXX = –

.XXX = – ANGLES = ± ½°

MATERIAL & TREATMENT

BRASS

SIGNATURE	DIV.	DATE
DRAWN BY	659	1-7-75
DRAFTING APPD.		
DESIGN APPD.		
APPD.		
PROJECT APPD.		
SPECIAL APPD.		

BATTELLE MEMORIAL INSTITUTE
COLUMBUS LABORATORIES
505 KING AVE., COLUMBUS, OHIO 43201

TITLE

PLUNGER POPPET

SIZE	CODE IDENT. NO.	DIV. NO.	DWG. NO.	REV.
A	79986	644	2018	

SCALE 1" = 1" ACCT. G1320-1 SHEET 1 OF 1

CAT. 394163 FORM D-3 5-70

REVISIONS			
LTR	DESCRIPTION	DATE	APPROVED

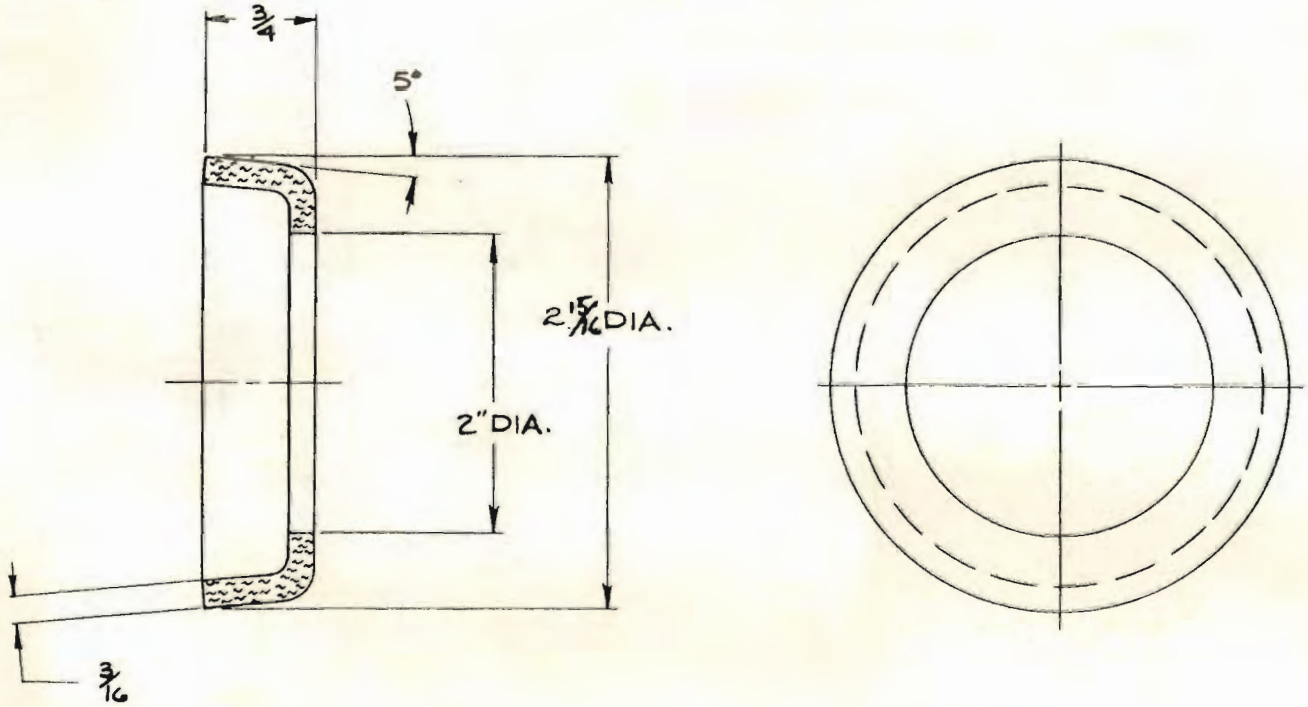

APPLICATION			
THIS ITEM IS USED ON SUBASSEMBLIES			
DRAWING NO.	PER ASSY	NO. OF ASSYS	TOTAL
2030	1	1	1
TO MAKE FINAL ASSEMBLY			TOTAL REQ'D

DO NOT SCALE DRAWING

UNLESS OTHERWISE SPECIFIED DIMENSIONS ARE IN INCHES. TOLERANCES ARE: ± 1/32

.XX = — .XXXX = —

.XXX = — ANGLES = ± 1°

MATERIAL & TREATMENT

LEATHER

SIGNATURE	DIV.	DATE
DRAWN BY aow	659	1-7-75
DRAFTING APPD.		
DESIGN APPD.		
APPD.		
PROJECT APPD.		
SPECIAL APPD.		

BATTELLE MEMORIAL INSTITUTE
COLUMBUS LABORATORIES
505 KING AVE., COLUMBUS, OHIO 43201

TITLE

LEATHER CUP

SIZE	CODE IDENT. NO.	DIV. NO.	DWG. NO.	REV.
A	79986	644	2019	

SCALE 1" = 1" ACCT. G1320-1 SHEET 1 OF 1

CAT. 294163 FORM D-3 5-70

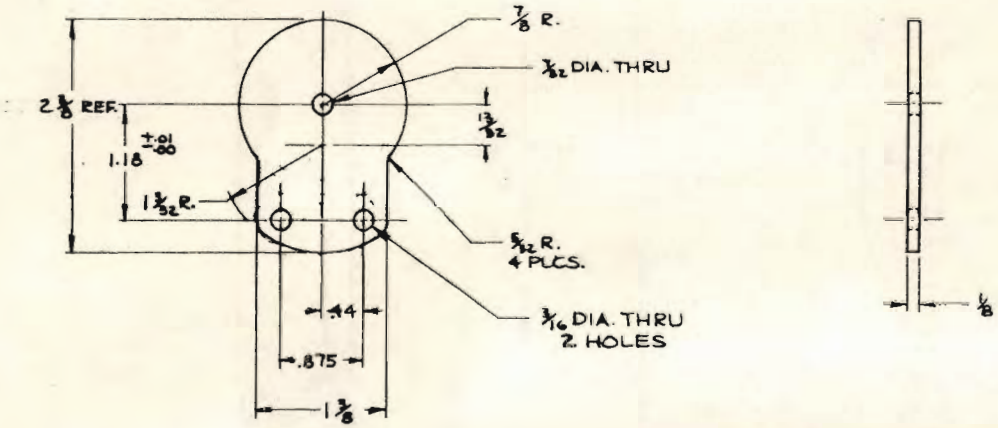

REVISIONS

ZONE	LTR	DESCRIPTION	DATE	APPROVED

PARTS LIST

FIND NO.	QTY.	PART NO. OR IDENTIFYING NO.	DWG. SIZE	DESCRIPTION	SPECIFICATION	NOTE NO.

APPLICATION			
THIS ITEM IS USED ON SUBASSEMBLIES			
DRAWING NO.	PER ASSY	NO. OF ASSYS	TOTAL
2015	1	1	1
TO MAKE FINAL ASSEMBLY			TOTAL PROD.

DO NOT SCALE DRAWING

UNLESS OTHERWISE SPECIFIED DIMENSIONS ARE IN INCHES TOLERANCES ARE ± 1/32
.XX = ±.01 .XXX = "
.XXX = ±.005 ANGLES = "

MATERIAL & TREATMENT

RUBBER

SIGNATURE	DIV	DATE
DRAWN BY		
DRAFTING APPD.		
DESIGN APPD.		
APPD.		
PROJECT APPD.		
SPECIAL APPD.		

Battelle Columbus Laboratories
505 King Avenue
Columbus, Ohio 43201
Telephone (614) 299-3151

TITLE

VALVE FLAPPER

SIZE	CODE IDENT. NO.	DIV. NO.	DWG. NO.	REV.
B	79986	644	2021	

SCALE 1" = 1" ACCT. G1320-1 SHEET 1 OF 1

REVISIONS			
LTR	DESCRIPTION	DATE	APPROVED

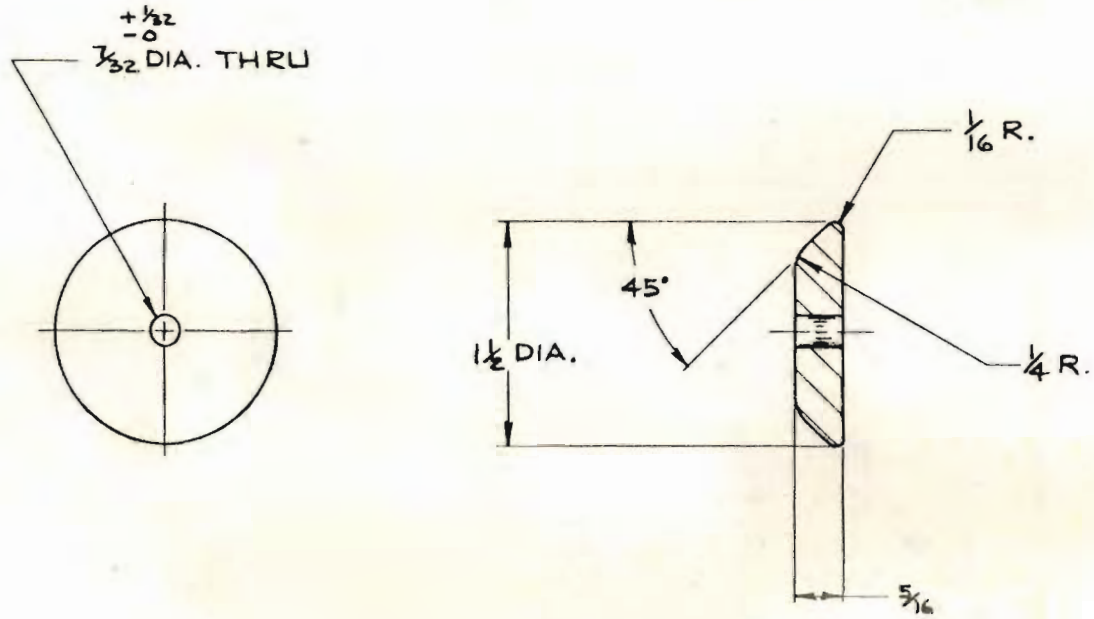

APPLICATION			
THIS ITEM IS USED ON SUBASSEMBLIES			
DRAWING NO.	PER ASSY	NO. OF ASSYS	TOTAL
2015	1	1	1
TO MAKE FINAL ASSEMBLY			TOTAL REQ'D

DO NOT SCALE DRAWING

UNLESS OTHERWISE SPECIFIED DIMENSIONS ARE IN INCHES. TOLERANCES ARE: 1/32

.XX = – .XXXX = –

.XXX = – ANGLES = ± 1/2°

MATERIAL & TREATMENT

CAST IRON

SIGNATURE	DIV.	DATE
DRAWN BY	659	1-8-75
DRAFTING APPD.		
DESIGN APPD.		
APPD.		
PROJECT APPD.		
SPECIAL APPD.		

BATTELLE MEMORIAL INSTITUTE
COLUMBUS LABORATORIES
505 KING AVE., COLUMBUS, OHIO 43201

TITLE

CHECK VALVE WEIGHT

SIZE	CODE IDENT. NO.	DIV. NO.	DWG. NO.	REV.
A	79986	644	2022	

SCALE 1" = 1" ACCT G1320-1 SHEET 1 OF 1

CAT. 204153 FORM D-5 3-79

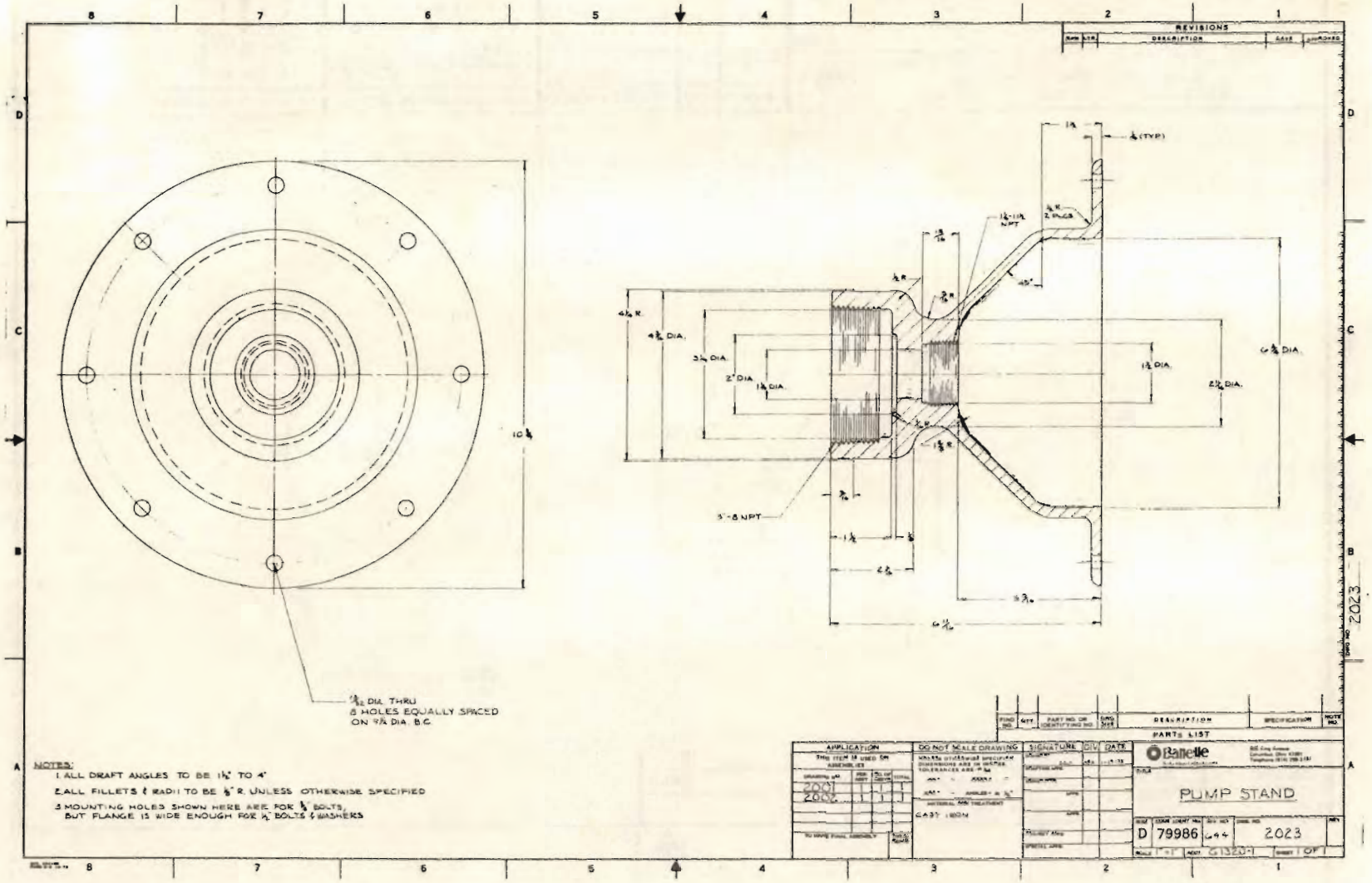
REVISIONS
DESCRIPTION
DATE
APPROVED
1 1/2 (TYP)
1 1/2-11 1/2 NPT
3/4 R. 2 PLCS
45°
1/4 R
3/8 R
4 1/2 R.
4 1/2 DIA.
3 1/2 DIA.
2" DIA.
1 1/2 DIA.
1 1/2 DIA.
2 1/2 DIA.
6 1/2 DIA.
3/8 R
1/2 R
3/8
3"-8 NPT
1 1/2
1/2
4 3/4
5 3/4
6 1/2
10 1/4
13/32 DIA. THRU
8 HOLES EQUALLY SPACED
ON 9 3/4 DIA. B.C.
NOTES:
1. ALL DRAFT ANGLES TO BE 1 1/2° TO 4°
2. ALL FILLETS & RADII TO BE 1/8" R. UNLESS OTHERWISE SPECIFIED
3. MOUNTING HOLES SHOWN HERE ARE FOR 1/2" BOLTS, BUT FLANGE IS WIDE ENOUGH FOR 1/2" BOLTS & WASHERS
APPLICATION
THIS ITEM IS USED ON ASSEMBLIES
DRAWING NO.
2001
2002
1
1
1
1
DO NOT SCALE DRAWING
UNLESS OTHERWISE SPECIFIED DIMENSIONS ARE IN INCHES
TOLERANCES ARE ±
MATERIAL AND TREATMENT
CAST IRON
SIGNATURE
DIV.
DATE
DRAWN
CHECKED
ENGINEER APPR.
PROJECT ENG.
SPECIAL APPR.
PARTS LIST
FIND NO.
QTY.
PART NO. OR IDENTIFYING NO.
DWG. SIZE
DESCRIPTION
SPECIFICATION
NOTE NO.
Battelle
TITLE
PUMP STAND
SIZE
D
CODE IDENT NO.
79986
DWG. NO.
2023
REV.
SCALE 1:1
NEXT G13201
SHEET 1 OF 1
2023

REVISIONS			
LTR	DESCRIPTION	DATE	APPROVED

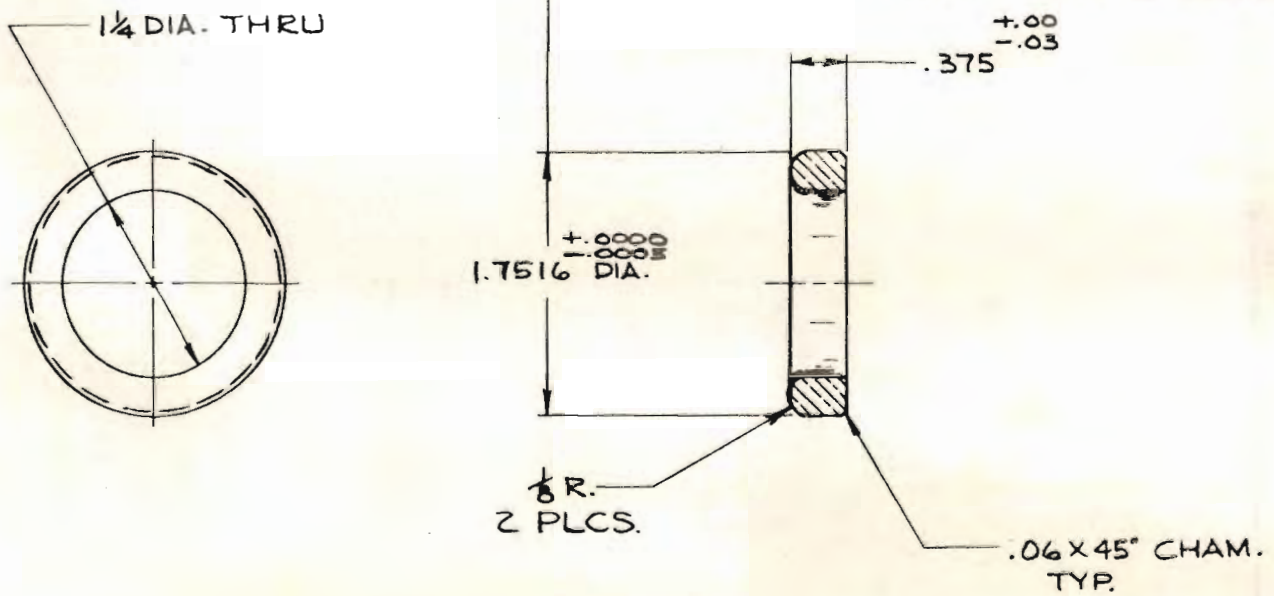

APPLICATION			
THIS ITEM IS USED ON SUBASSEMBLIES			
DRAWING NO.	PER ASSY	NO. OF ASSYS	TOTAL
2010	1	1	1
2016	1	1	1
TO MAKE FINAL ASSEMBLY			TOTAL REQ'D.

DO NOT SCALE DRAWING

UNLESS OTHERWISE SPECIFIED DIMENSIONS ARE IN INCHES. TOLERANCES ARE: ± 1/32

.XX = ±.01 .XXXX = "

.XXX = " ANGLES = ± ½°

MATERIAL & TREATMENT

PVC

SIGNATURE	DIV.	DATE
DRAWN BY	655	1-7-75
DRAFTING APPD.		
DESIGN APPD.		
APPD.		
PROJECT APPD.		
SPECIAL APPD.		

BATTELLE MEMORIAL INSTITUTE
COLUMBUS LABORATORIES
505 KING AVE., COLUMBUS, OHIO 43201

TITLE

VALVE SEAT

SIZE	CODE IDENT. NO.	DIV. NO.	DWG. NO.	REV.
A	79986	644	2024	

SCALE 1" = 1" ACCT. G1320-1 SHEET 1 OF 1

CAT. 294163 FORM D-5 5-70

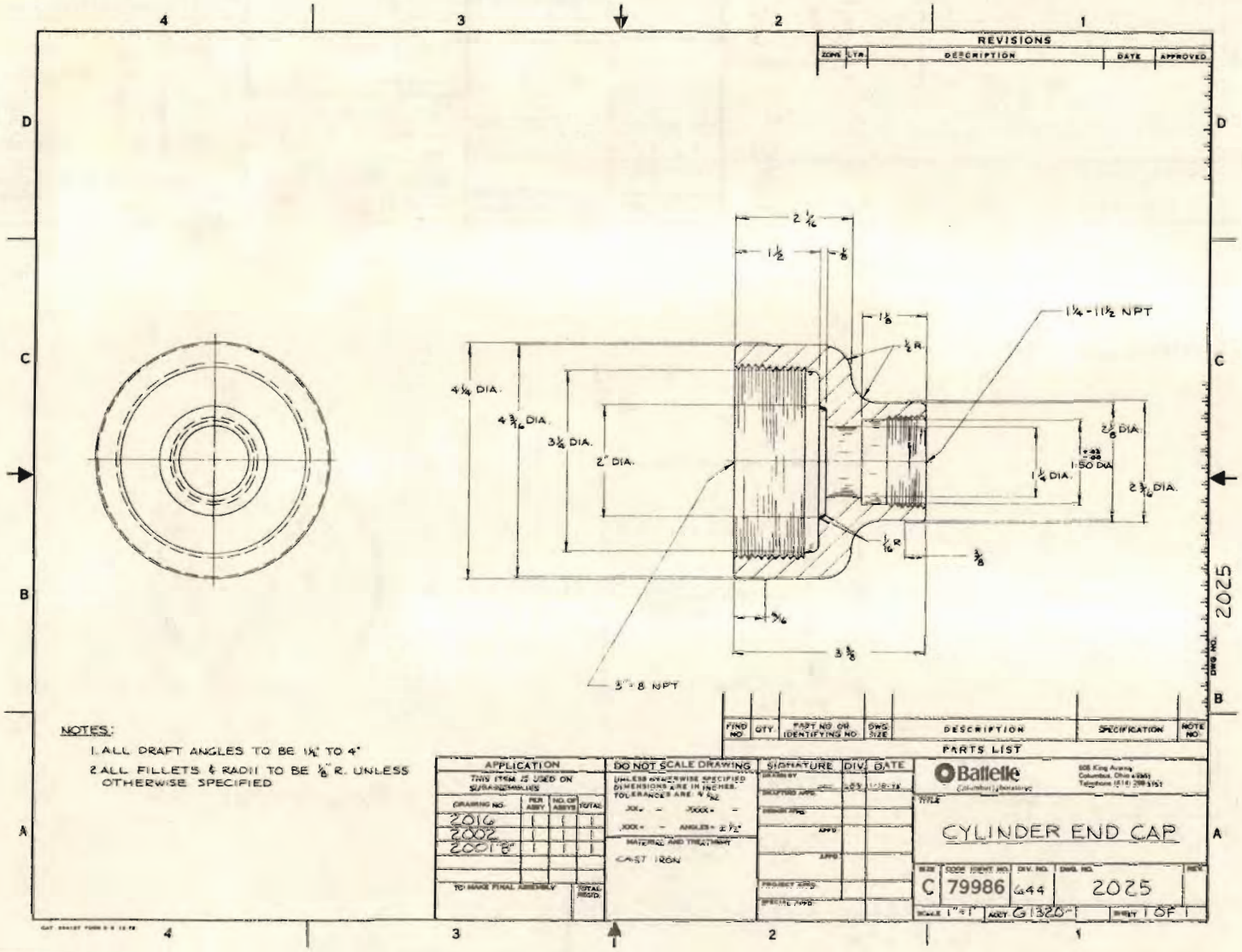
REVISIONS
ZONE
LTR
DESCRIPTION
DATE
APPROVED
2 1/16
1 1/2
1/8
1 1/8
1 1/4 - 11 1/2 NPT
1/8 R.
4 1/4 DIA.
4 3/16 DIA.
3 1/8 DIA.
2" DIA.
2 1/8 DIA.
1.50 DIA.
1 1/4 DIA.
2 3/16 DIA.
1/16 R
3/8
3/16
3 3/8
3/8 - 8 NPT
DWG. NO. 2025
NOTES:
1. ALL DRAFT ANGLES TO BE 1 1/2° TO 4°
2. ALL FILLETS & RADII TO BE 1/8" R. UNLESS OTHERWISE SPECIFIED
FIND NO.
QTY.
PART NO. OR IDENTIFYING NO.
DWG. SIZE
DESCRIPTION
SPECIFICATION
NOTE NO.
PARTS LIST
APPLICATION
THIS ITEM IS USED ON SUBASSEMBLIES
DRAWING NO.
PER ASSY
NO. OF ASSYS
TOTAL
2016
2002
2001 B
TO MAKE FINAL ASSEMBLY
TOTAL REQ'D.
DO NOT SCALE DRAWING
UNLESS OTHERWISE SPECIFIED DIMENSIONS ARE IN INCHES. TOLERANCES ARE ± 1/32
.XX = ± .XXX = ±
.XXX = ± ANGLES = ± 1/2°
MATERIAL AND TREATMENT
CAST IRON
SIGNATURE
DIV.
DATE
DRAWN BY
CHECKED APPD.
DESIGN APPD.
APPD.
APPD.
PROJECT APPD.
SPECIAL APPD.
Battelle
Columbus Laboratories
505 King Avenue
Columbus, Ohio 43201
Telephone (614) 299-3151
TITLE
CYLINDER END CAP
SIZE
C
CODE IDENT NO.
79986
DIV. NO.
444
DWG. NO.
2025
REV.
SCALE 1" = 1"
AGCY. G 1320"
SHEET 1 OF 1

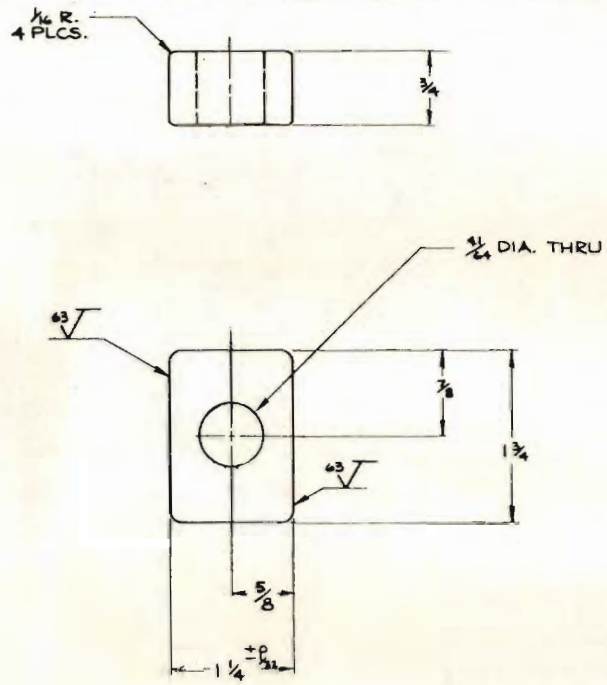

NOTES:

1. ALL DRAFT ANGLES TO BE 1½° TO 4°
2. ALL FILLETS & RADII TO BE 1/8" R. UNLESS OTHERWISE SPECIFIED

REVISIONS				
ZONE	LTR	DESCRIPTION	DATE	APPROVED

FIND NO.	QTY.	PART NO. OR IDENTIFYING NO.	DWG. SIZE	DESCRIPTION	SPECIFICATION	NOTE NO.

PARTS LIST

APPLICATION			
THIS ITEM IS USED ON SUBASSEMBLIES			
DRAWING NO.	PER ASSY	NO. OF ASSYS	TOTAL
2001	2	1	2
2002	2	1	2
TO MAKE FINAL ASSEMBLY			TOTAL PARTS

DO NOT SCALE DRAWING

UNLESS OTHERWISE SPECIFIED DIMENSIONS ARE IN INCHES TOLERANCES ARE ±1/32

.XX = ± .XXX = ±
.XXX = ± ANGLES = ±

MATERIAL & TREATMENT

CAST IRON

SIGNATURE	DIV.	DATE
DRAWN BY		1-8-75
DRAFTING APPD		
DESIGN APPD		
APPD		
PROJECT APPD		
SPECIAL APPD		

Battelle Columbus Laboratories
505 King Avenue
Columbus, Ohio 43201
Telephone (614) 299-3151

TITLE

SLIDING BLOCK

SIZE	CODE IDENT. NO.	DIV. NO.	DWG. NO.	REV.
B	79986	644	2026	

SCALE 1"=1" ACCT G1320-11 SHEET 1 OF 1

CAT. PRINTING Form 2-7 12-72

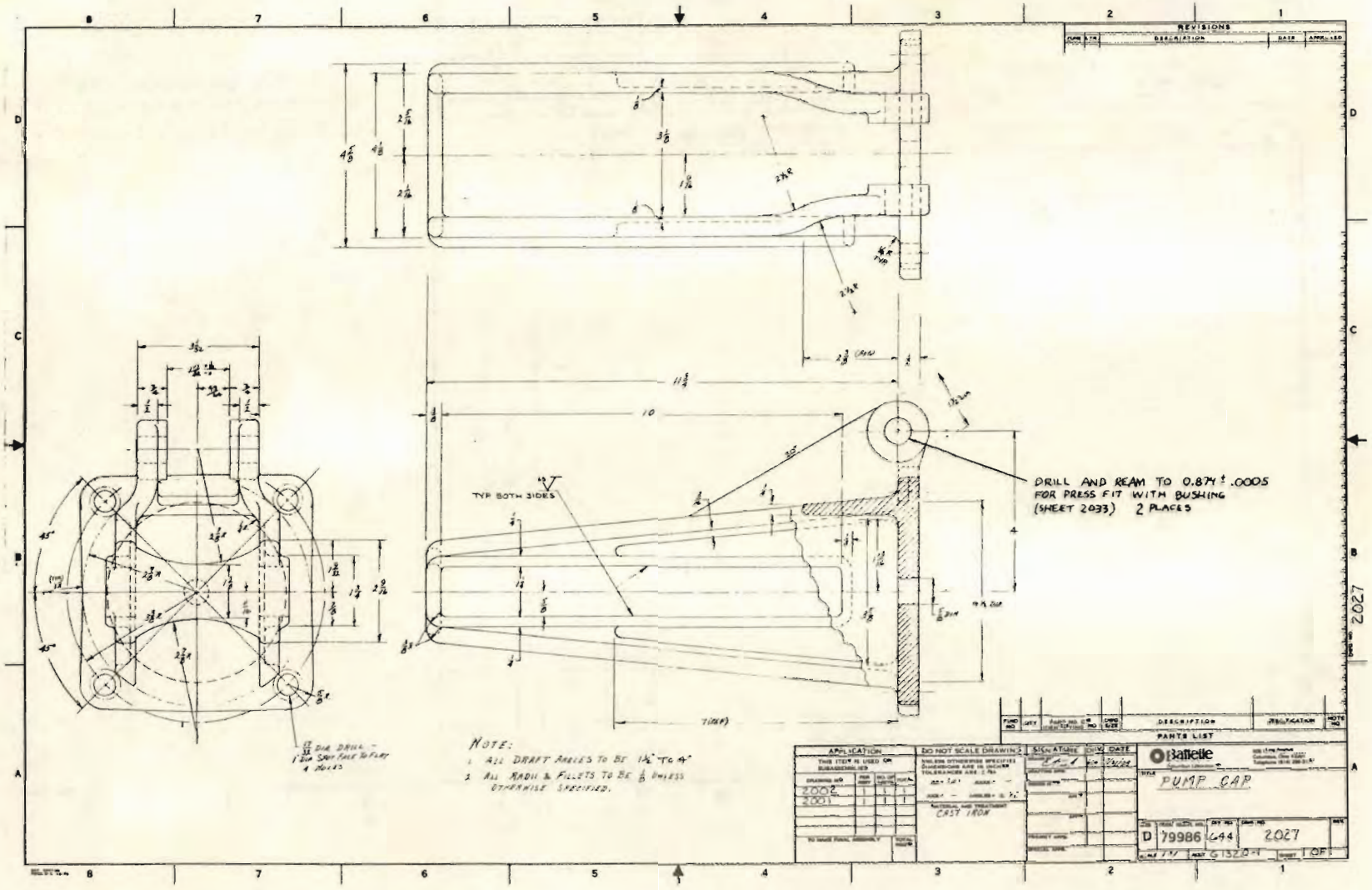
REVISIONS
DRILL AND REAM TO 0.874 ± .0005 FOR PRESS FIT WITH BUSHING (SHEET 2033) 2 PLACES
TYP BOTH SIDES
NOTE:
1. ALL DRAFT ANGLES TO BE 1½° TO 4°
2. ALL RADII & FILLETS TO BE 1/8 UNLESS OTHERWISE SPECIFIED.
PARTS LIST
DO NOT SCALE DRAWING
CAST IRON
Battelle
PUMP CAP
D 79986 644 2027
G132.0-1
1 OF 2

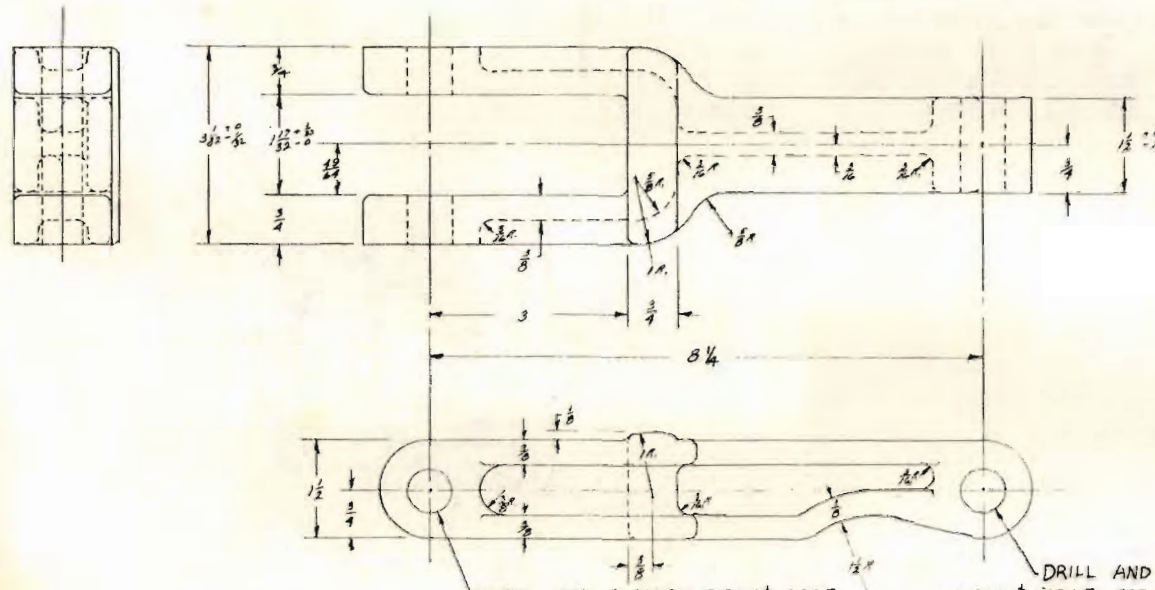

NOTE:
1. ALL DRAFT ANGLES TO BE 1½° TO 4°
2. ALL RADII & FILLETS ⅛" UNLESS OTHERWISE SPECIFIED.

REVISIONS				
ZONE	LTR	DESCRIPTION	DATE	APPROVED

FIND NO.	QTY	PART NO. OR IDENTIFYING NO.	DWG. SIZE	DESCRIPTION	SPECIFICATION	NOTE NO.

PARTS LIST

APPLICATION			
THIS ITEM IS USED ON ASSEMBLIES			
DRAWING NO	PER ASSY	NO. OF ASSYS	TOTAL
2001	1	1	1
2002	1	1	1
TO MAKE FINAL ASSEMBLY			TOTAL REQ'D

DO NOT SCALE DRAWING
UNLESS OTHERWISE SPECIFIED DIMENSIONS ARE IN INCHES. TOLERANCES ARE ± 1/64
.XX = ± .XXX = ±
.XXX = ± ANGLES = ±
MATERIAL AND TREATMENT
CAST IRON

SIGNATURE	DIV.	DATE
DRAWN BY		
DRAFTING APPD.		
DESIGN APPD.		
APPD.		
APPD.		
PROJECT APPD.		
SPECIAL APPD.		

Battelle
Columbus Laboratories
505 King Avenue
Columbus, Ohio 43201
Telephone (614) 299-3151

TITLE HANDLE FULCRUM

SIZE	CODE IDENT. NO.	DRV. NO.	DWG. NO.	REV.
C	79986	644	2029	

SCALE 1:1 ACCT. G-1948-0001 SHEET 1 OF 1

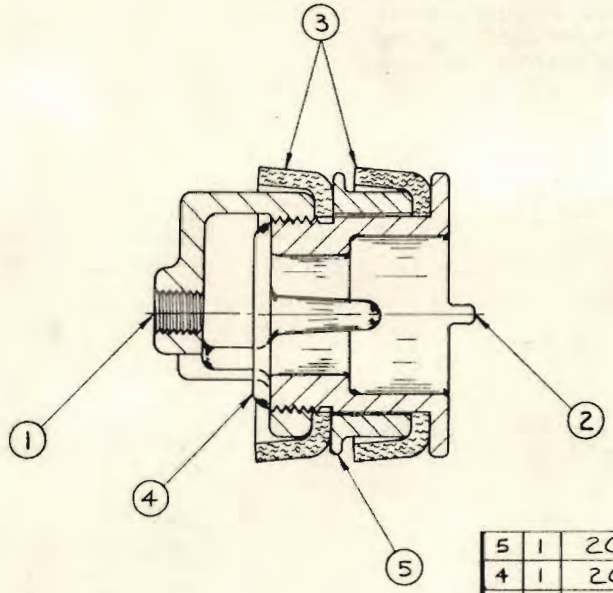

NOTE:

1. DOUBLE CUP PLUNGER TO BE USED WHEN WATER LEVEL IS MORE THAN 50 FT. BELOW SURFACE

FIND NO.	QTY.	PART NO. OR IDENTIFYING NO.	DWG. SIZE	DESCRIPTION	SPECIFICATION	NOTE NO.
5	1	2032	A	PLUNGER SPACER		
4	1	2018	A	PLUNGER POPPET		
3	2	2019	A	THREE INCH CUP		
2	1	2031	B	PLUNGER FOLLOWER		
1	1	2017	B	PLUNGER CAGE		

PARTS LIST

REVISIONS				
ZONE	LTR	DESCRIPTION	DATE	APPROVED

APPLICATION				
THIS ITEM IS USED ON ASSEMBLIES				
DRAWING NO.	PER ASSY	NO. OF ASSYS	TOTAL	
2001	1	1	1	
2002	1	1	1	
TO MAKE FINAL ASSEMBLY				TOTAL REQ'D.

DO NOT SCALE DRAWING

UNLESS OTHERWISE SPECIFIED DIMENSIONS ARE IN INCHES. TOLERANCES ARE:

.XX = .XXX = XXXX = ANGLES =

MATERIAL & TREATMENT

SIGNATURE	DIV	DATE
DRAWN BY		6-10-76
DRAFTING APPD.		
DESIGN APPD.		
APPD		
PROJECT APPD		
SPECIAL APPD.		

Battelle Columbus Laboratories
505 King Avenue
Columbus, Ohio 43201
Telephone (614) 299-3151

TITLE PLUNGER ASSEMBLY, DOUBLE CUP

SIZE	CODE IDENT. NO.	DIV. NO.	DWG. NO.	REV.
B	79986	644	2030	

SCALE 1" = 1" ACCT. SHEET 1 OF 1

CAT. 8941-08 FORM D-7 12-73

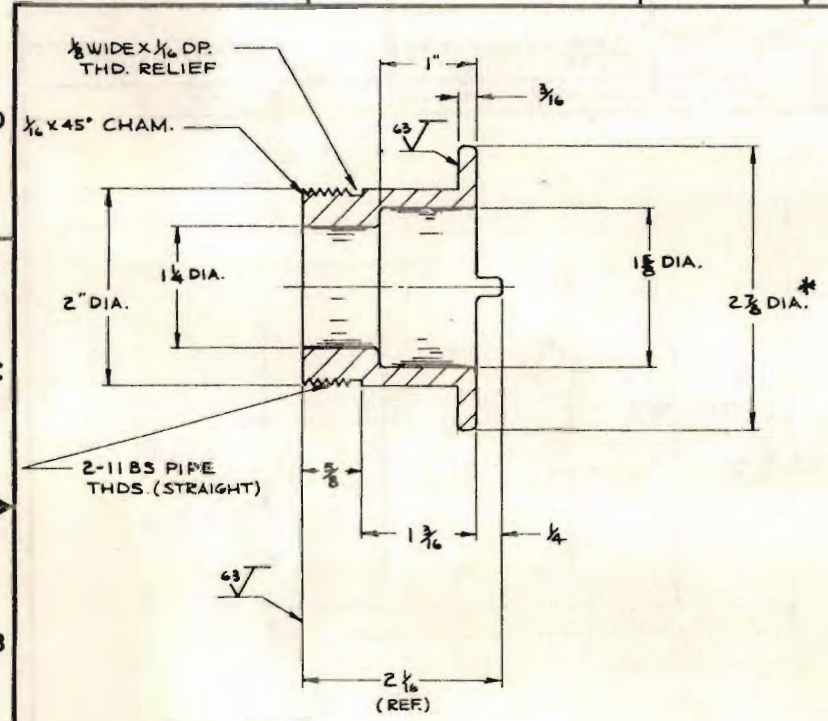

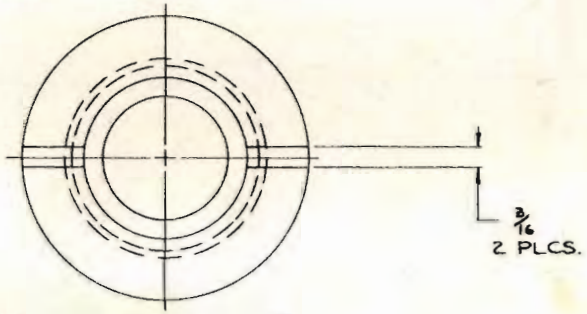

* THIS SIZE IS FOR A 3" ID CYLINDER AND WILL VARY WITH THE ID OF THE PVC PIPE OR LINER.

NOTES:

1. ALL DRAFT ANGLES TO BE 1½° TO 4°
2. ALL FILLETS & RADII TO BE 1/16" R. UNLESS OTHERWISE SPECIFIED

REVISIONS

ZONE	LTR	DESCRIPTION	DATE	APPROVED

PARTS LIST

FIND NO.	QTY.	PART NO. OR IDENTIFYING NO.	DWG. SIZE	DESCRIPTION	SPECIFICATION	NOTE NO.

APPLICATION

THIS ITEM IS USED ON SUBASSEMBLIES

DRAWING NO.	PER ASSY	NO. OF ASSYS	TOTAL
2030	1	1	1

TO MAKE FINAL ASSEMBLY — TOTAL REQ'D.

DO NOT SCALE DRAWING

UNLESS OTHERWISE SPECIFIED DIMENSIONS ARE IN INCHES. TOLERANCES ARE ± 1/32

.XX = — .XXX = —

XXX = — ANGLES = ± ½°

MATERIAL & TREATMENT

BRASS

SIGNATURE	DIV.	DATE
DRAWN BY		
DRAFTING APPD.		
DESIGN APPD.		
APPD.		
PROJECT APPD.		
SPECIAL APPD.		

Battelle Columbus Laboratories — 505 King Avenue, Columbus, Ohio 43201, Telephone (614) 299-3151

TITLE: PLUNGER FOLLOWER

SIZE	CODE IDENT. NO.	DIV. NO.	DWG. NO.	REV.
B	79986	644	2031	

SCALE 1" = 1" ACCT. G1320-1 SHEET 1 OF 1

CAT. 884166 FORM D-7 10-72

NOTES:

1. ALL DRAFT ANGLES TO BE 1½° TO 4°
2. ALL FILLETS & RADII TO BE ⅛" R. UNLESS OTHERWISE SPECIFIED

REVISIONS			
LTR	DESCRIPTION	DATE	APPROVED

*THIS SIZE IS FOR A 3" ID CYLINDER AND WILL VARY WITH THE ID OF THE PVC PIPE OR LINER.

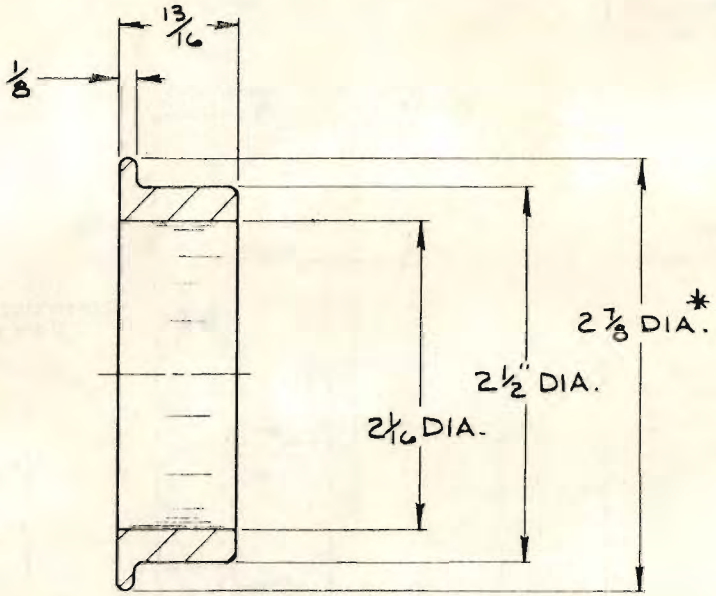

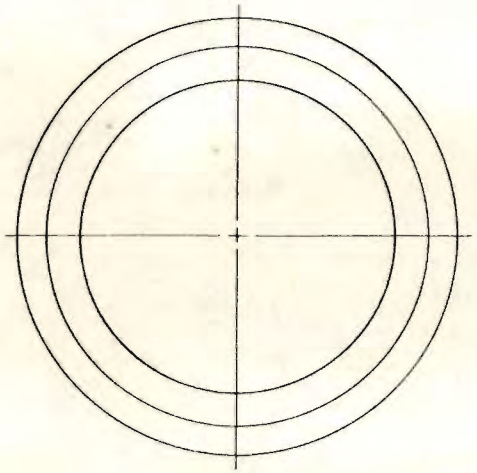

APPLICATION			
THIS ITEM IS USED ON SUBASSEMBLIES			
DRAWING NO.	PER ASSY	NO. OF ASSYS	TOTAL
2030	1	1	1
TO MAKE FINAL ASSEMBLY			TOTAL REQ'D.

DO NOT SCALE DRAWING

UNLESS OTHERWISE SPECIFIED DIMENSIONS ARE IN INCHES. TOLERANCES ARE: ±1/32

.XX = – .XXXX = –

.XXX = – ANGLES = –

MATERIAL & TREATMENT

BRASS

SIGNATURE	DIV.	DATE
DRAWN BY GAW	659	1-7-76
DRAFTING APPD.		
DESIGN APPD.		
APPD.		
PROJECT APPD.		
SPECIAL APPD.		

BATTELLE MEMORIAL INSTITUTE
COLUMBUS LABORATORIES
505 KING AVE., COLUMBUS, OHIO 43201

TITLE

PLUNGER SPACER

SIZE	CODE IDENT. NO.	DIV. NO.	DWG. NO.	REV.
A	79986	644	2032	

SCALE 1"=1" ACCT G1320-1 SHEET 1 OF 1

CAT. 294163 FORM D-S 5-70+

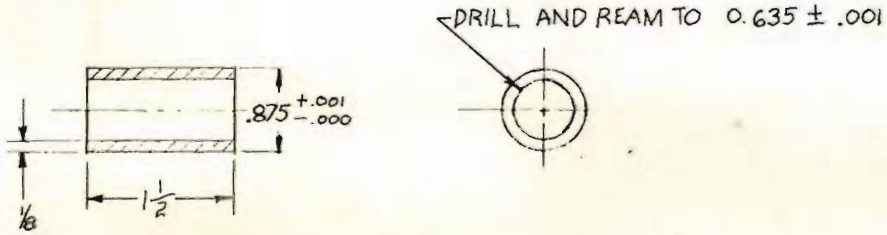

HARDEN TO R_c 60-65

APPLICATION-	DRAWING NO.	PER ASSY.	NO. OF ASSYS.	TOTAL
	2004	1	1	1
	2008	1	1	1
	2029	1	1	1

MATERIAL: HIGH CARBON STEEL
(1040 GRADE OR BETTER)

OFFICE OF INTERNATIONAL PROGRAMS
ENGINEERING EXPERIMENT STATION
GEORGIA INSTITUTE OF TECHNOLOGY
ATLANTA, GEORGIA 30332

TITLE: LONG BUSHING - STEEL

DRAWN BY	APPROVED BY	REVISION NO. 1	REVISION NO. 2
G. K. WEBB	H. C. Moh	BY	BY
DATE 1/17/79	DATE 1/17/79	DATE	DATE

SCALE 1" = 1" | PROJECT NO. | SHEET 2034

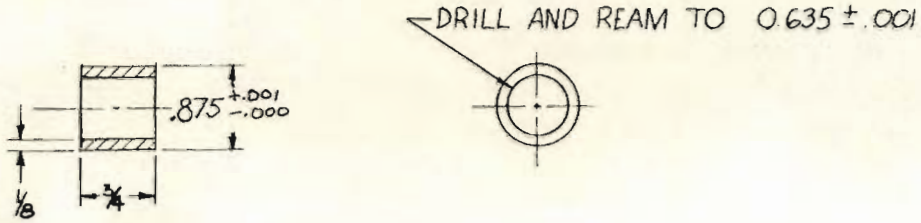

HARDEN TO R_c 60-65

APPLICATION —

DRAWING NO.	PER ASSY.	NO. OF ASSYS.	TOTAL
2008	2	1	2
2026	1	2	2
2027	2	1	2
2029	2	1	2

MATERIAL – HIGH CARBON STEEL
(1040 GRADE OR BETTER)

OFFICE OF INTERNATIONAL PROGRAMS
ENGINEERING EXPERIMENT STATION
GEORGIA INSTITUTE OF TECHNOLOGY
ATLANTA, GEORGIA 30332

TITLE: SHORT BUSHING – STEEL

DRAWN BY	APPROVED BY	REVISION NO. 1	REVISION NO. 2
G.K. WEBB	R. C. Mott	BY	BY
DATE 1/17/79	DATE 1/17/79	DATE	DATE

SCALE 1" = 1" | PROJECT NO. | SHEET 2033

Appendix C

CONSTRUCTION AND INSTALLATION

Figure 13. Typical Unimproved Well in Sri Lanka

Open dug wells are not very sanitary due to the probability of dirt and debris falling into the well. The wells are also vulnerable to contamination by the inflow of sullage water or from dirty buckets used to draw the water. Thus, a full cover, proper lining, and a hand pump is a desirable arrangement to help reduce the risk of such contaminants.

PREVIOUS PAGE BLANK

Figure 14. Construction of Formwork

The first step in Sri Lankan well construction was to remove any loose brick and plaster from the inside of the well. Following this, the well was cleaned with the aid of a motorized pump, deepened if necessary, and relined with new plaster as deeply as possible. The headwalls were, in general, removed in order that the concrete base would be supported by the ground instead of the well lining. The slab formwork was then designed and constructed for ease of removal following construction.

Figure 15. Steel Reinforcing

The area around the well was prepared for the cover slab with an apron extending at least five feet from the outer edge of the well. A form for the manhole was constructed and 3/8-inch steel reinforcing was placed on six-inch centers. The reinforcing steel extended three feet beyond the edge of the well.

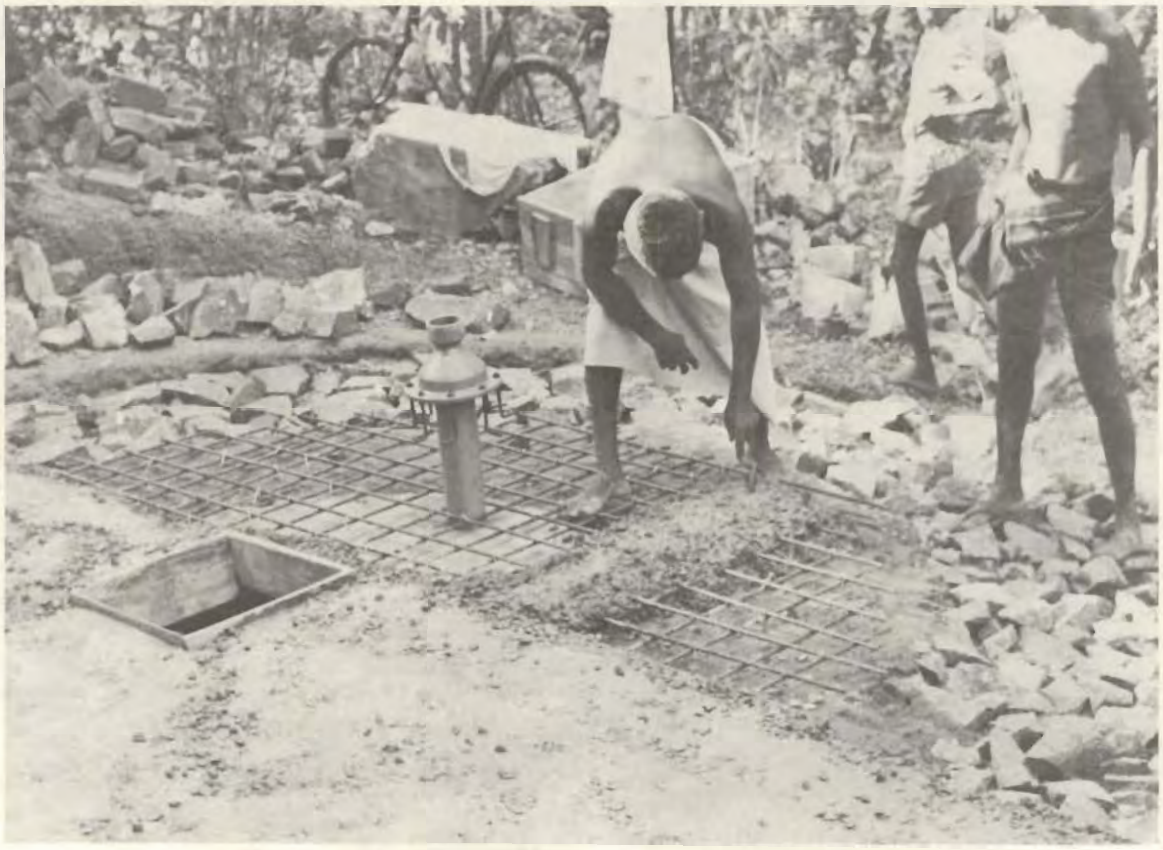

Figure 16. Concrete Placement

A 1:2:4 mix of concrete was poured over the well and apron area, and given a 1 in 30 slope for drainage. A short section of PVC pipe was placed in the concrete to allow for the pump drop pipe and to prevent sullage water from re-entering the well from under the pump base.

Figure 17. Close-up of Pump Base

In order to obtain proper alignment of the anchor bolts, the pump base was used as a template when forming the well slab. The base was located at a height that would be comfortable to the users when the entire pump was later installed. The anchor bolts were then tied into the steel reinforcing for increased strength.

Figure 18. Pump Pedestal

A wooden form was placed around the pump base to form the pump pedestal. The pedestal was poured at the same time as the cover slab to ensure a good bond between the two.

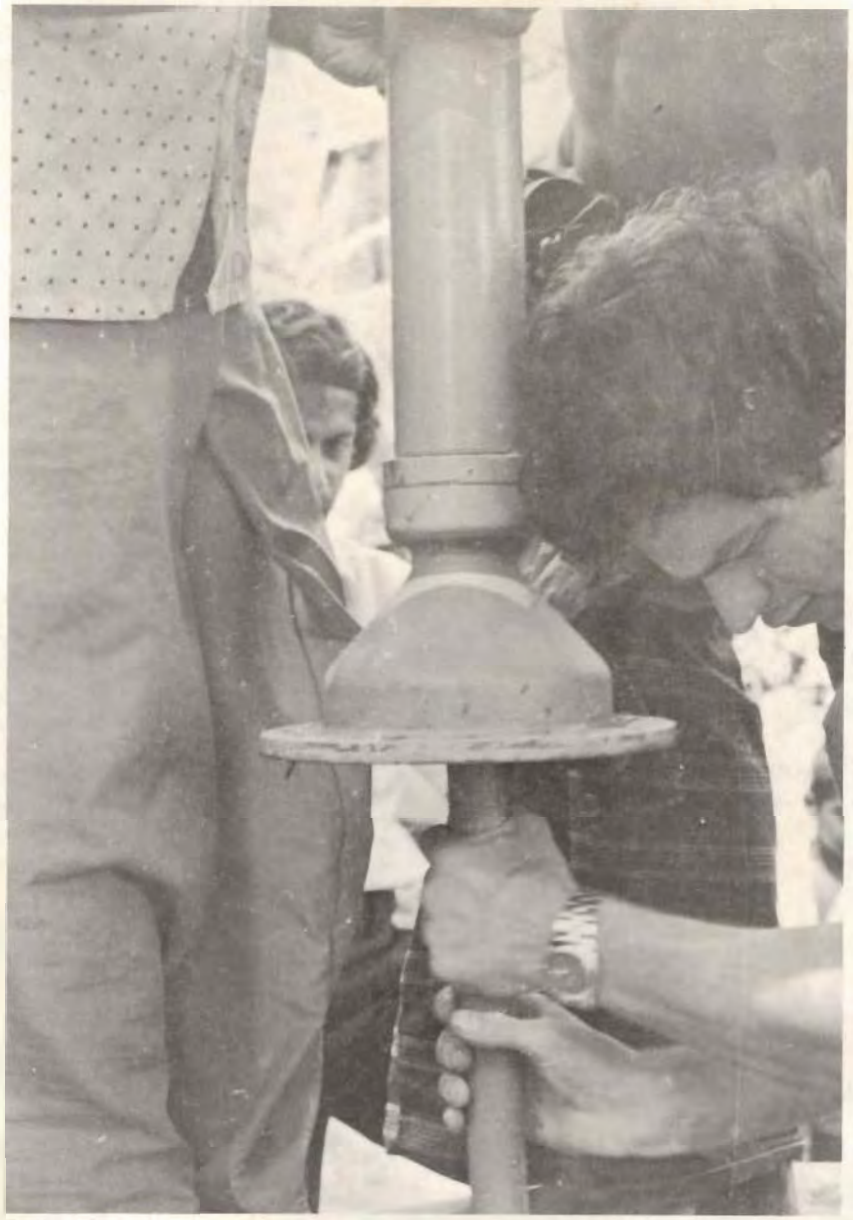

Figure 19. Attaching the Drop Pipe to a Shallow-Well Pump

The AID shallow-well pump was installed by inserting a 1¼-inch drop pipe into the well platform opening, attaching the threaded drop pipe to the base of the pump, and then securing the pump to the well platform. The length of the required drop pipe was determined by measuring the depth of the well with a weight and string from the well platform, allowing approximately two feet for mud at the bottom of the well if it were new, or one foot if it was an older well where the mud had settled.

Figure 20. Securing the Pump to the Concrete Cover Platform

Figure 21. Initial Priming of the Pump

Properly made leather cups were soaked in an edible oil for at least 12 hours to preserve the leather and to keep them from drying and shrinking (leather shrinks as it dries). However, over an extended period of storage, shrinkage could occur as the oil evaporated, in which case the shallow-well pump would have to be primed initially to get sufficient suction to bring water up the drop pipe. The pumps are self priming when in operation.

Figure 22. Lowering the Cap onto the Pump

Figure 23. Site Drainage

In order to provide proper drainage, a raised curb was formed on the edge of the apron and a drainage channel provided. Following curing of the concrete for two weeks, the pumps were installed and the well disinfected. A manhole provided access to the well for pump maintenance and well repair, but was sealed off to prevent inflow of contaminated water.

The AID deep-well pump required considerably more manpower for installation than the shallow-well model. The following steps were necessary:

1. Determine the length of required drop pipe by measuring the depth of the well from the well platform, allowing for the length of the cylinder which must be connected to the drop pipe and approximately two feet at the bottom for a new well or one foot for an older well.

2. Attach a full length of plunger rod to the plunger assembly inside the cylinder and replace the cylinder cap; then attach a full length of drop pipe to the cylinder.

3. Alternate the attaching of full-length plunger rod and drop pipe until the required length of drop pipe is secured.

4. Shove plunger rod entirely up through pump body, adding additional plunger rod if necessary, and attach the drop pipe to the pump stand.

5. With the plunger assembly resting at the bottom of the cylinder, the top threads of the plunger rod should approach but not be exposed above the pump cap hole. This ensures that the stroke of the piston assembly is synchronized with the travel of the sliding block and prevents damage to the cylinder and/or the piston assembly. If the rod is exposed above the pump cap hole, the rod should be cut to this length and rethreaded.

6. Complete the installation by attaching the pump cap and securing the pump stand to the well platform.

Appendix D

MAINTENANCE TRAINING/INFRASTRUCTURE

Figure 24. Assembly of PVC Drop Pipe

In order for any hand pump program to be successful, an organized maintenance program must be implemented. The Ministry of Local Government, Housing and Construction (MLGHC) has been responsible for the USAID/Sri Lanka hand pump maintenance program, with the majority of the work being assigned to its district offices of the Assistant Commissioner for Local Government (ACLG). In each district, the ACLG first contacted the Community Center (CC) in each area where preselected wells were located, and the CC, in turn, appointed a villager living near the well to assume responsibility for the daily maintenance and repairs of the pumps. Georgia Tech project personnel then involved these village caretakers in a maintenance training session which coincided with the actual hand pump installation. Thus, the village caretaker was the person in the infrastructure in direct daily contact with the pumps, making his duties extremely important.

PREVIOUS PAGE BLANK

Figure 25. Attaching Drop Pipe to Pump Base

More specifically, at the time of the pump installation, a training manual was given to the caretaker and the working parts of the pump explained (using the pumps being installed, along with drawings in the manual). Common maintenance operations such as leather cup replacement, flapper valve replacement, and lubrication were demonstrated to the caretaker as the first pump was installed (most sites were designed and constructed for installation of two pumps). The caretaker then disassembled the second pump to be installed, and re-assembled and installed it with the assistance of Georgia Tech personnel.

Figure 26. Bolting Pump Body and Base to Well Cover

Personnel assigned to the ACLG were directly involved with maintenance training. These Technical Officers were instructed in the installation of the pumps and were to be called upon by the village caretakers in the event of serious problems. If additional spare sparts were needed or further difficulties were encountered, Technical Officers were directed to contact the MLGHC in Colombo.

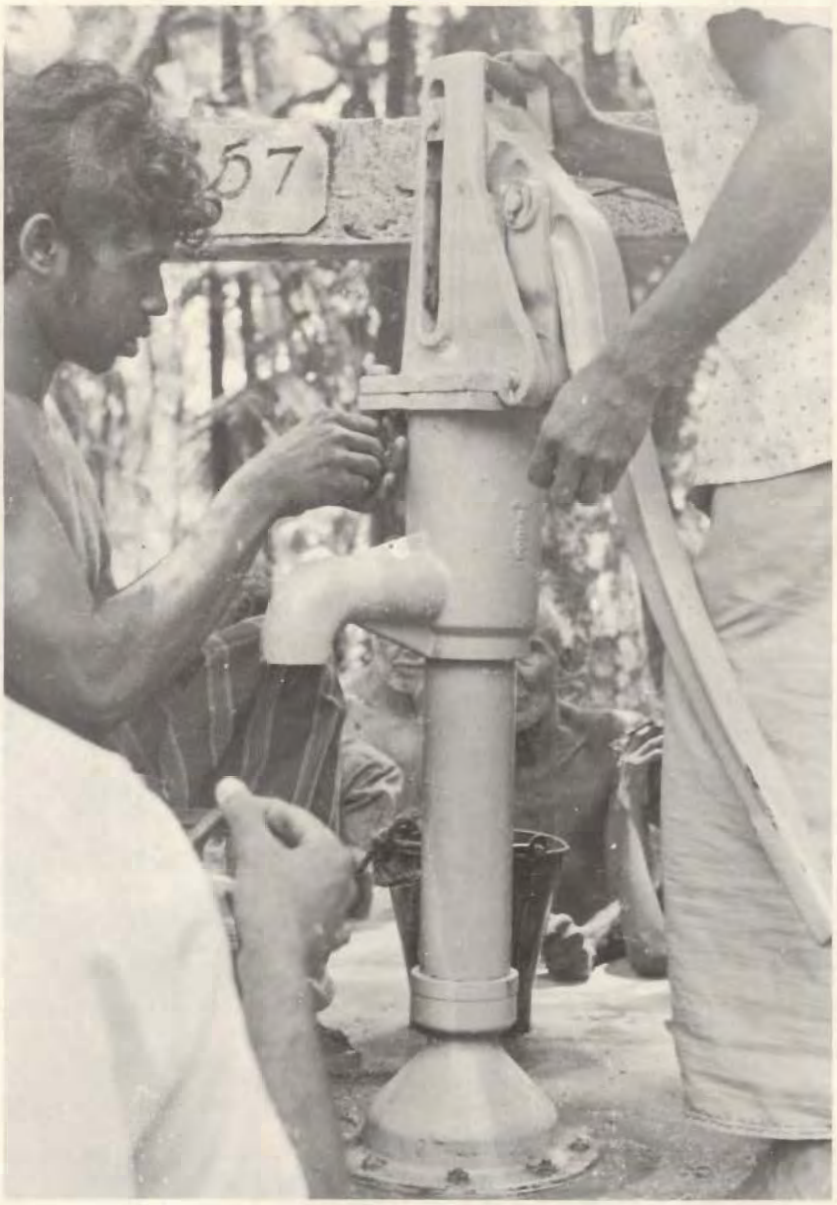

Figure 27. Bolting Cap Assembly onto Pump Body

Future Maintenance Programs

The MLGHC has admirably expressed a need for continued maintenance support of the pumps installed under this project. It has also shown an interest in further hand pump programs. To assure the continued success of existing and future programs, a broad maintenance infrastructure has been developed (see Figure 28) and is discussed in greater detail below.

National Water Supply and Drainage Board (NWSDB). As the institution responsible for the supply of safe drinking water, NWSDB will have certain overall responsibilities in the maintenance of community wells and their pumps. Some of the major responsibilities are:

1. Preparation and supply of maintenance manuals, addressing both pump maintenance and maintenance of water quality;
2. Preparation and implementation of schemes for general and preventive maintenance through local authorities and regional offices of NWSDB;
3. Conducting water quality tests and providing technical assistance and advice regarding maintenance of water quality and removal of pollution sources;
4. Conducting regular inspection of pumps to ensure that proper maintenance is performed by the Community Centre (CC) and District Development Council (DDC) sub-offices, and advising the ACLG and DDC on remedial actions;
5. Making suitable arrangements for major repairs to pumps and/or their replacement.

Technical Officers of the Assistant Commissioner for Local Government (ACLG). Technical Officers of the ACLG will have overall responsibility for maintenance of community wells with hand pumps in each district of Sri Lanka. They will be trained in the actual maintenance of hand pumps and in techniques of water quality analysis, as well as provided with any necessary manuals. Their prime responsibilities, however, will be for the proper supervision of maintenance work and the provision of assistance to CC and DDC sub-offices when major maintenance

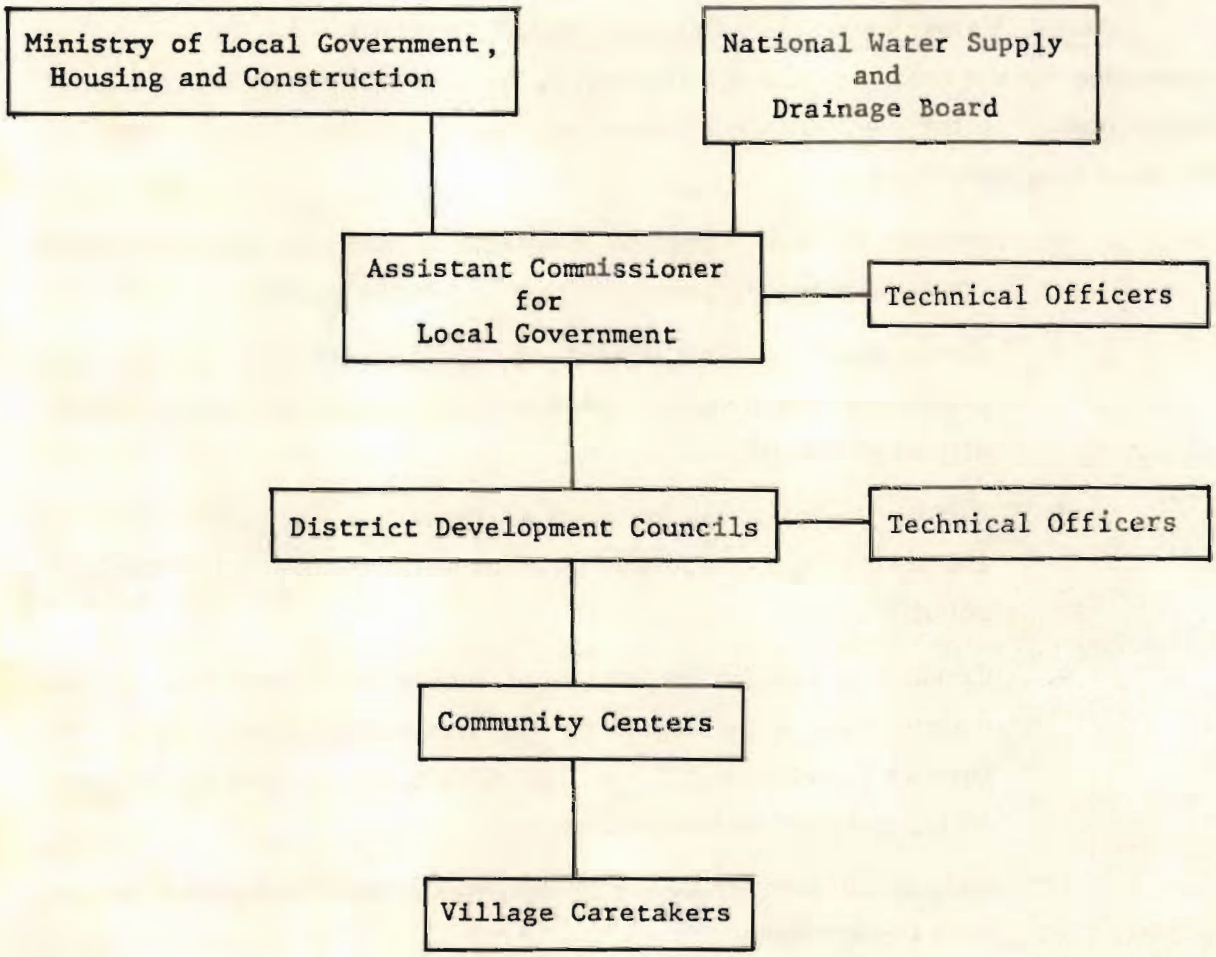

Figure 28. Government of Sri Lanka Infrastructure

work is required. Thus, arrangements can be made to have spare hand pumps available from the ACLG for installation in the event major breakdowns occur. Similarly, when water quality is judged unsuitable and a pollution source must be eliminated, these Technical Officers will be involved in corrective follow-up. These officers will also maintain proper records for each community well in the ACLG's office. In matters concerning community wells in the districts, the ACLG will maintain liaison with NWSDB.

Technical Officers of the District Development Council (DDC). The Technical Officers of the sub-offices of the DDC also will be trained in the maintenance of community wells and hand pumps, and may maintain a certain inventory of spare parts. These Technical Officers, too, will be provided with maintenance manuals and will assume responsibility for certain repairs to pumps which are not handled by village caretakers.

These Technical Officers also will have certain responsibilities with respect to water quality analyses performed by the National Water Supply and Drainage Board. Collection of water samples for testing, follow-up action where water is found to be unsafe for drinking, and maintenance of proper records will be functions of the Technical Officers on behalf of the DDC. However, some of these functions, such as water quality control, might also be done through the CC.

The Community Centre (CC). The day-to-day responsibility for the maintenance and security of the community well will lie with the CC, a voluntary community organization which is directly responsible to the District Development Council. A Community Centre will name one of its members (preferably one living in close proximity to the well) as a voluntary caretaker. The caretakers will be trained in the maintenance of the pump and will be provided with a maintenance manual. The caretaker will attend to routine maintenance and perhaps certain defined minor repairs. The Community Centre may make arrangements to collect suitable subscriptions from users of the well to defray small expenses incurred in maintenance. Certain spare parts could also be kept with the Community Centre.

The CC also should have health volunteers among its members who will perform health extension work in the community concerned. Such work will cover various aspects of community health, especially those related to use of safe drinking water and sanitary latrines. For this purpose the ACLG will make arrangements with district health officials to provide necessary training to health volunteers of the CC.

Appendix E

MAINTENANCE MANUAL

The following manual was used throughout the project for training caretakers and technicians in pump maintenance and repair. The maintenance structure summary was established by representatives of USAID, MLGHC, NWSDB, and Georgia Tech. Several errors and omissions in the manual have been brought to the attention of the contractor since the conclusion of the project. However, it was determined that the presentation of the original manual in this report would be of more value than the revised version.

PREVIOUS PAGE BLANK

US AID HAND PUMP - MAINTENANCE MANUAL

TABLE OF CONTENTS

	PAGE
Maintenance of Handpump Under the USAID Project	1 - 4
Lubrication	5
Symptoms of Pump Wear and Remedies	6
Cup Replacement	7 - 9
Pin Replacement	10 - 11
Foot Valve Replacement	12

PREVIOUS PAGE BLANK

The maintenance structure will include the following

a) The Caretaker of the Community Centre for each well

b) The Community Centre for wells in its area

c) The local authority concerned

d) The A.C.L.G. of the district

e) The Regional Office of the National Water Supply & Drainage Board

2. The Caretaker will be directly responsible to the Community Centre for a well and its pump (s). Where necessary there could be another representative from the Community Centre to perform certain functions assigned to the Caretaker. The chief duties and functions of the Caretaker are as follows -

i) Lubricating the pump (s) on a weekly basis as shown in the maintenance manual.

ii) Replacing the plunger cups and connecting pins as shown in the maintenance manual.

iii) Maintaining the stores required and contacting the Technical Officer of the Local Authority concerned and/or the Technical Officer of the A.C.L.G. when the pump (s) need major repairs, when there is a lack of spare cups and pins, and when general advice about the pump or well is required. (All repairs other than the routine connecting pin and plunger cup replacement are considered major).

iv) Being responsible for the security of the well and the pump (s).

v) Keeping records of pump maintenance and repairs, maintenance of water quality and utilisation of the well, and submitting necessary information to the Local Authority.

vi) Ensuring that regular bacteriological tests are carried out normally once per month, and that reports are sent to the Community Centre.

vii) Ensuring that corrective steps are taken where the bacteriological tests show the quality of water to be unsatisfactory.

viii) Providing any other assistance necessary for the Community Centre to maintain and operate the well and to promote its use by the Community.

3. The Community Centre will have overall responsibility for the management of the well and its pump (s), and for this purpose it will have a Caretaker and if necessary an assistant, to attend to the duties assigned. Among the main responsibilities of the Community Centre are the following -

i) Ensuring that the Caretaker performs his/her duties specified above.

ii) Ensuring that the pump is not abused in any way.

iii) Ensuring that the water from the well is available to all residents in the surrounding area of the well. In dry seasons, steps should be taken to conserve or allocate water to residents.

iv) Ensuring that a trained Caretaker is always available for the maintenance of the pump (s).

v) Ensuring that water quality tests are done regularly and corrective action taken, and that the members of the Community Centre are kept informed regarding water quality.

vi) Promoting use of safe drinking water in the Community.

vii) Liassing with the local authority and the A.C.L.G. in all matters concerning the well.

viii) Making necessary arrangements to collect any fees or subscriptions from the Community in order to maintain the well.

Contd...3

4. The Local Authority will have overall responsibility for the work of all the Community Centres in its area of authority in respect of the management of these wells. Among its main responsibilities are the following -

i) Making the necessary institutional arrangements for the Community Centres to properly manage these wells.

ii) Arranging for provision and accounting of funds required by Community Centre for this purpose.

iii) Providing the services of its Technical Officer when required by the Community Centres.

iv) Passing any by-laws required and implementing them.

5. The Technical Officer of the Local Authority will carry out the following duties -

i) Periodically check the condition and operatibility of all pumps in his area of authority, and provide any assistance required by Caretakers.

ii) Ensure that all pumps in his area of authority are operating properly. Necessary instructions for this purpose, will be issued by him to the Caretakers, with copies to the Community Centres.

iii) Perform all major repairs such as replacement of foot Valve. Where he has a difficulty in doing this, he will get the assistance of the regional office of the N.W.S.D.B.

iv) Ensure that sufficient stocks of cups and connecting pins are available with each Caretaker.

v) Main sufficient stocks of spare parts and major components at the Local Authority.

vi) Co-ordinate work in respect of water quality control

6. The A.C.L.G. of the district will have supervisary responsibility in respect of the work of all Local Authorities in the district in connection with the proper maintenance and operation of the wells. In addition, the Technical Officers of the A.C.L.G. will monitor the work of the Local Authority Technical Officers, conducting regular test checks.

7. The Regional Office of the N.W.S.D.B. will provide any technical assistance when called for by the Local Authority or the A.C.L.G., for the proper maintenance of the wells and the pumps. It will also undertake repairs to pumps where the Local Authority Technical Officers require such assistance. It will also have overall responsibility for the quality of water, and will make arrangements for samples to be tested regularly, and for advice to be given to Local Authorities and their Community Centres on remedial measures to be taken.

N.W/6

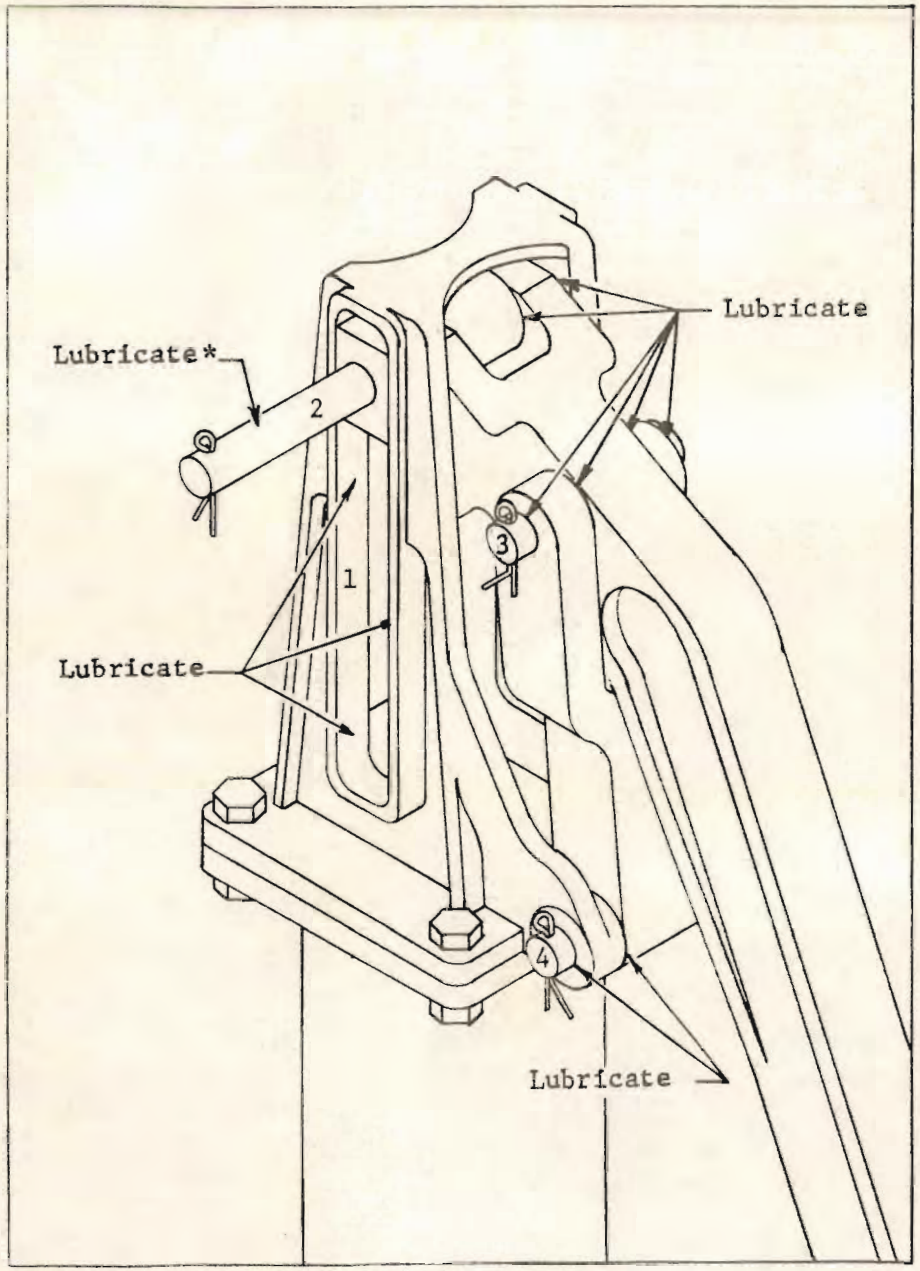

LUBRICATION:

To ensure the longest life from your USAID hand pump, various parts need to be lubricated weekly. These parts are as follows:

(1) Slider block track.
(2) Plunger rod/handle pin.
(3) Handle/fulcrum pin.
(4) Fulcrum/pump cap pin.

No parts inside the pump need to be lubricated.

*Whenever the pins are removed for any reason, the length of the pin should be lubricated.

SYMPTOMS OF PUMP WEAR AND REMEDIES:

(A) The pump must be pumped several times in the morning before water comes out.

Cause: The foot valve is excessively worn or dirt is allowing water to leak past.

Remedy: Examine foot valve. Clean or replace as necessary.

Note: If this situation is severe, the pump may require repriming daily. As soon as the problem is corrected the well should be re disinfected by the appropriate people.

(B) The amount of water pumped per stroke is significantly less than when the pump was new.

Causes: (i) The plunger cups are worn and leaking.
(ii) The foot valve is excessively worn or dirty.
(iii) Dirt and debris are blocking the drop pipe.

Remedy: (i) Examine the plunger cups for excessive wear or a tear. Replace as necessary.
(ii) Examine the foot valve. Clean or replace as necessary.
(iii) Pull the drop pipe from the well. If there is a check valve on the lower end of the pipe, check for dirt and debris. Otherwise, examine the drop pipe for dirt and debris, particularly where the drop pipe joins the pump body. Remove the dirt and debris.

(C) No water can be pumped.

Cause: (i) Foot valve is broken or is stuck in an open position.
(ii) Plunger cage is broken or is unscrewed from plunger rod.

Remedy: (i) Examine foot valve. If broken, replace. If stuck clean or remove the blockage. If the valve still sticks, replace it.
(ii) If the plunger cage is unscrewed from the plunger rod or if the plunger cage is broken, its weight will not be felt while pumping. Should the plunger cage be unscrewed from the rod, rescrew it taking care that the rod doesn't protrude into the cage. Tighten the lock nut securely. If the plunger cage is broken, replace the plunger cage.

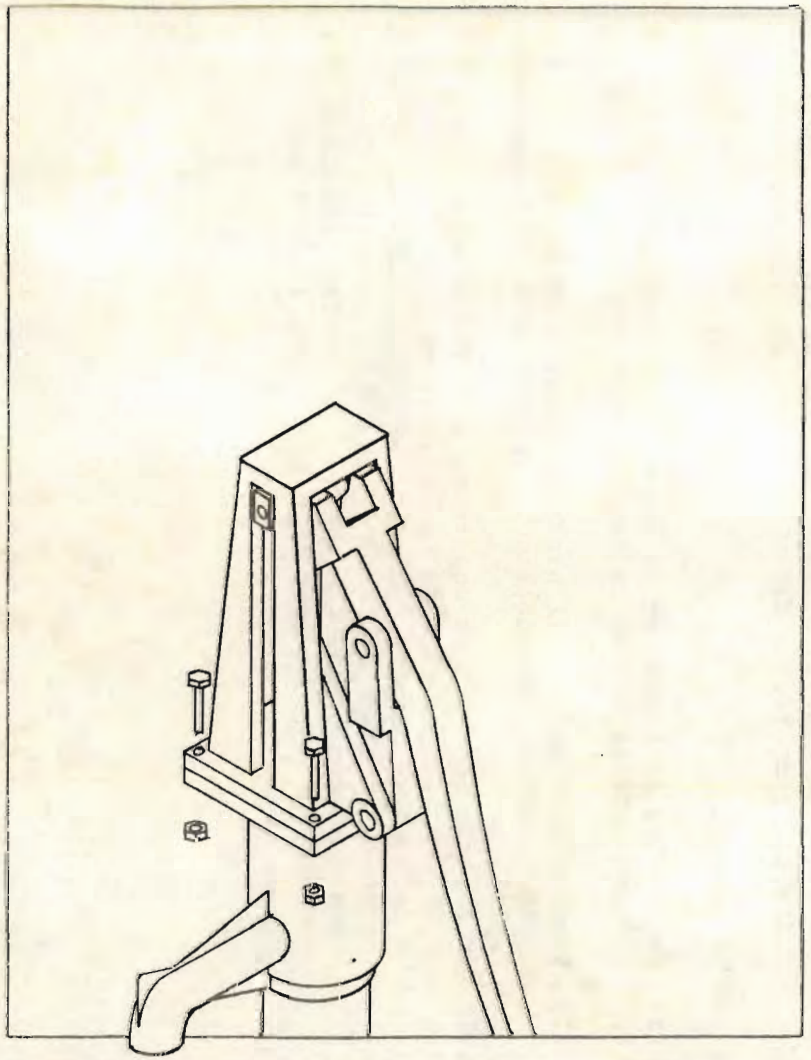

CUP REPLACEMENT

Remove the four bolts holding down the pump cap.

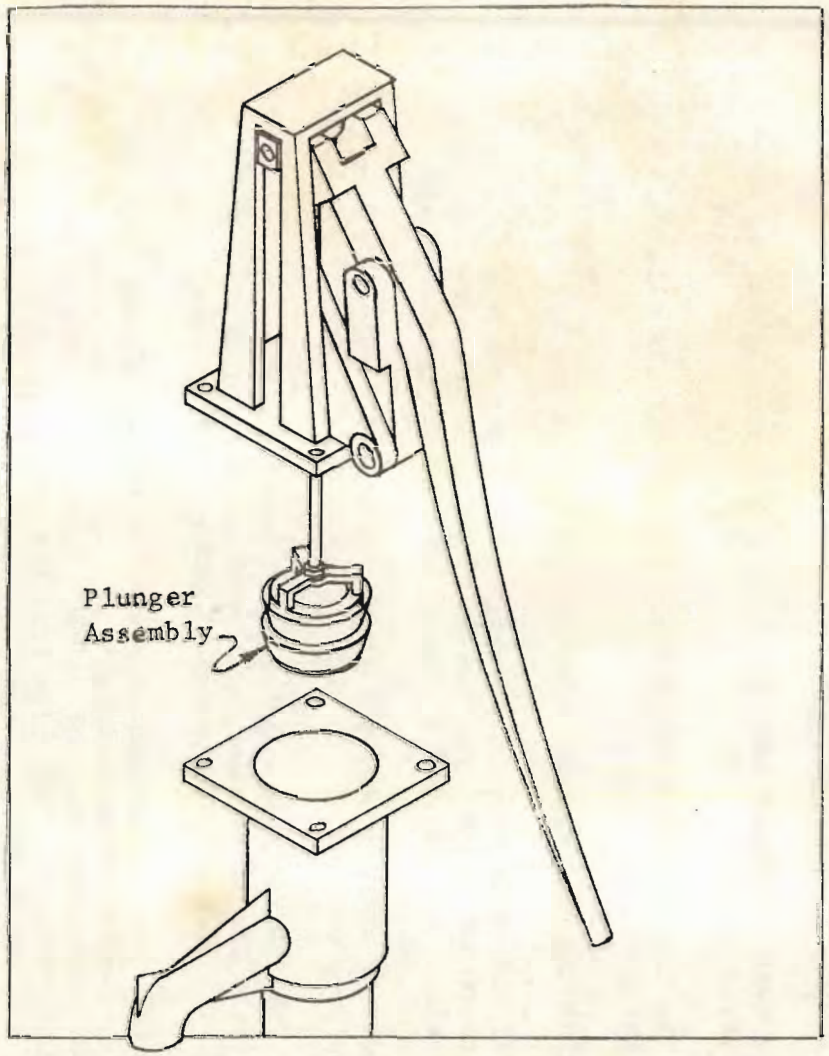

Lift the cap off the pump body.

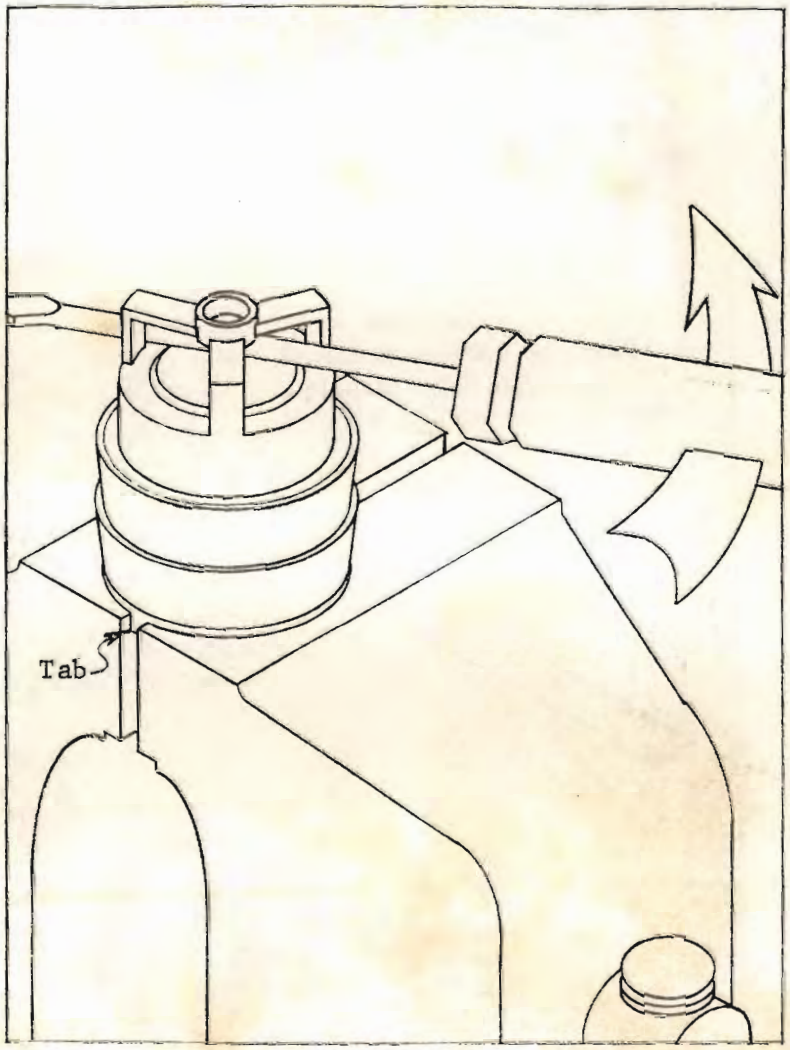

Unscrew the plunger assembly. A wrench can easily be used in place of the vice to grip the tabs.

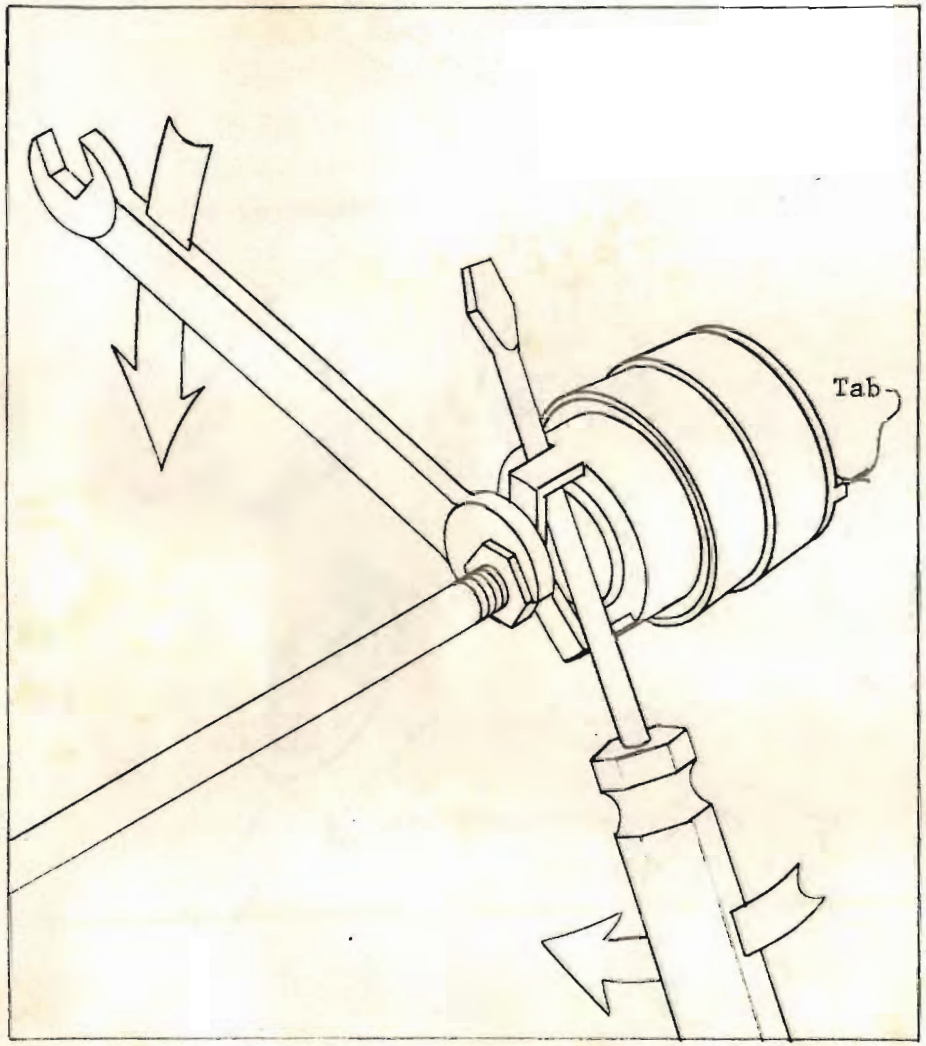

Unscrew the plunger assembly from the plunger rod.

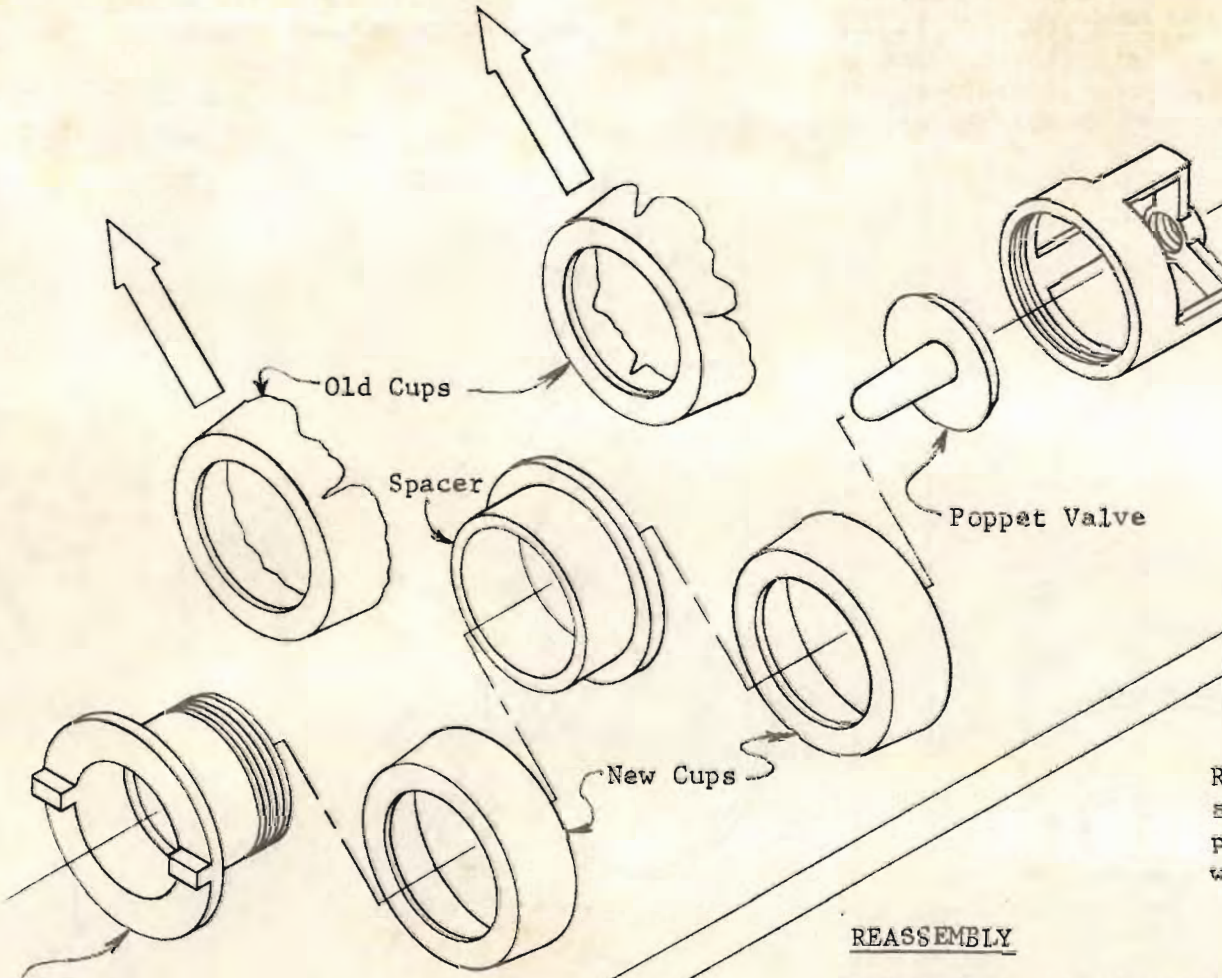

REPLACEMENT OF CUPS

Remove the worn cups by sliding them off the plunger assembly. Replace with new cups.

REASSEMBLY

Reassemble the plunger assembly exactly as the drawing above shown. Screw the plunger assembly back together snugly, but not too tightly. This will make disassembly next time very difficult. Be sure that the lock nut is tightened firmly on the plunger rod. Replace the pump cap and rebolt.

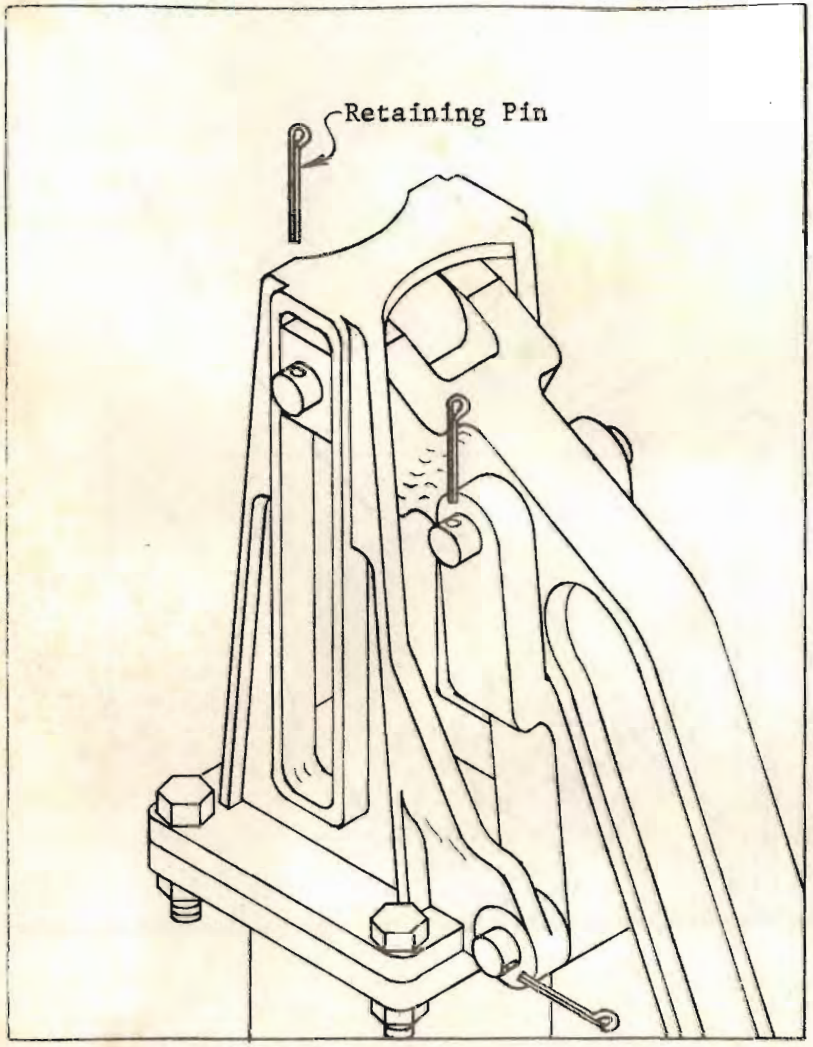

REPLACEMENT OF PINS:

Remove the retaining pins.

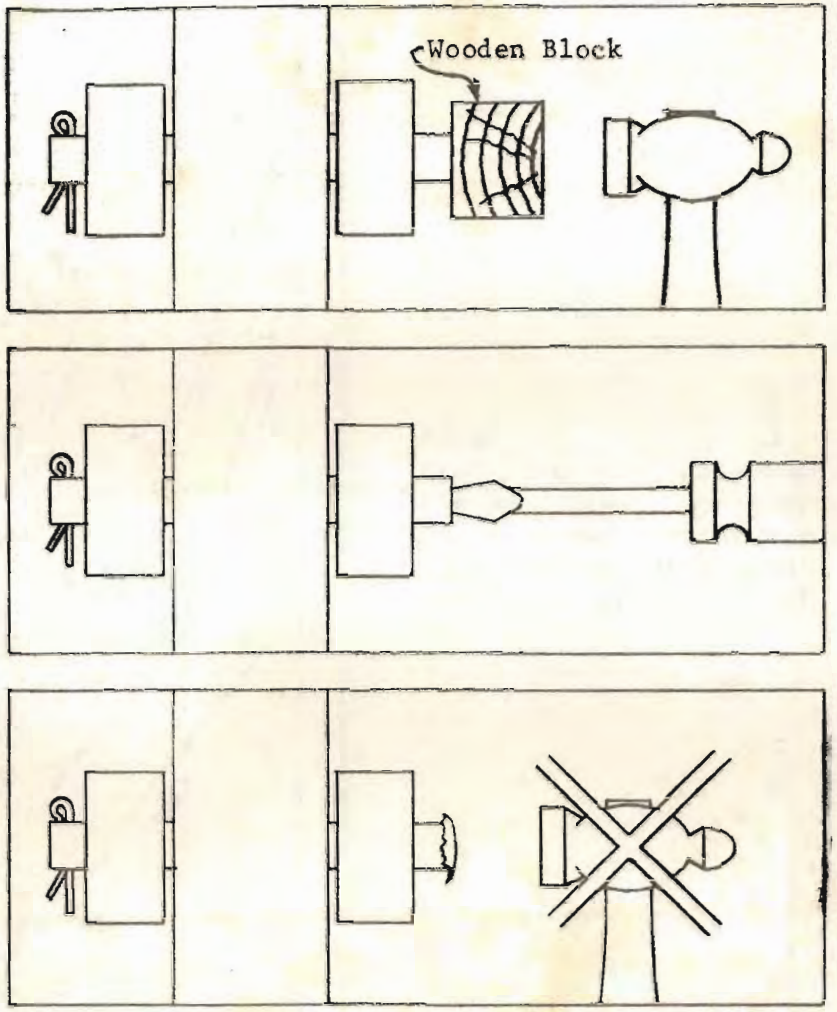

Drive out the connecting pins. Use a hammer and a block of wood or a slender object like a screw-driver. Do not use a hammer directly on the pin as it will make the pin impossible to remove.

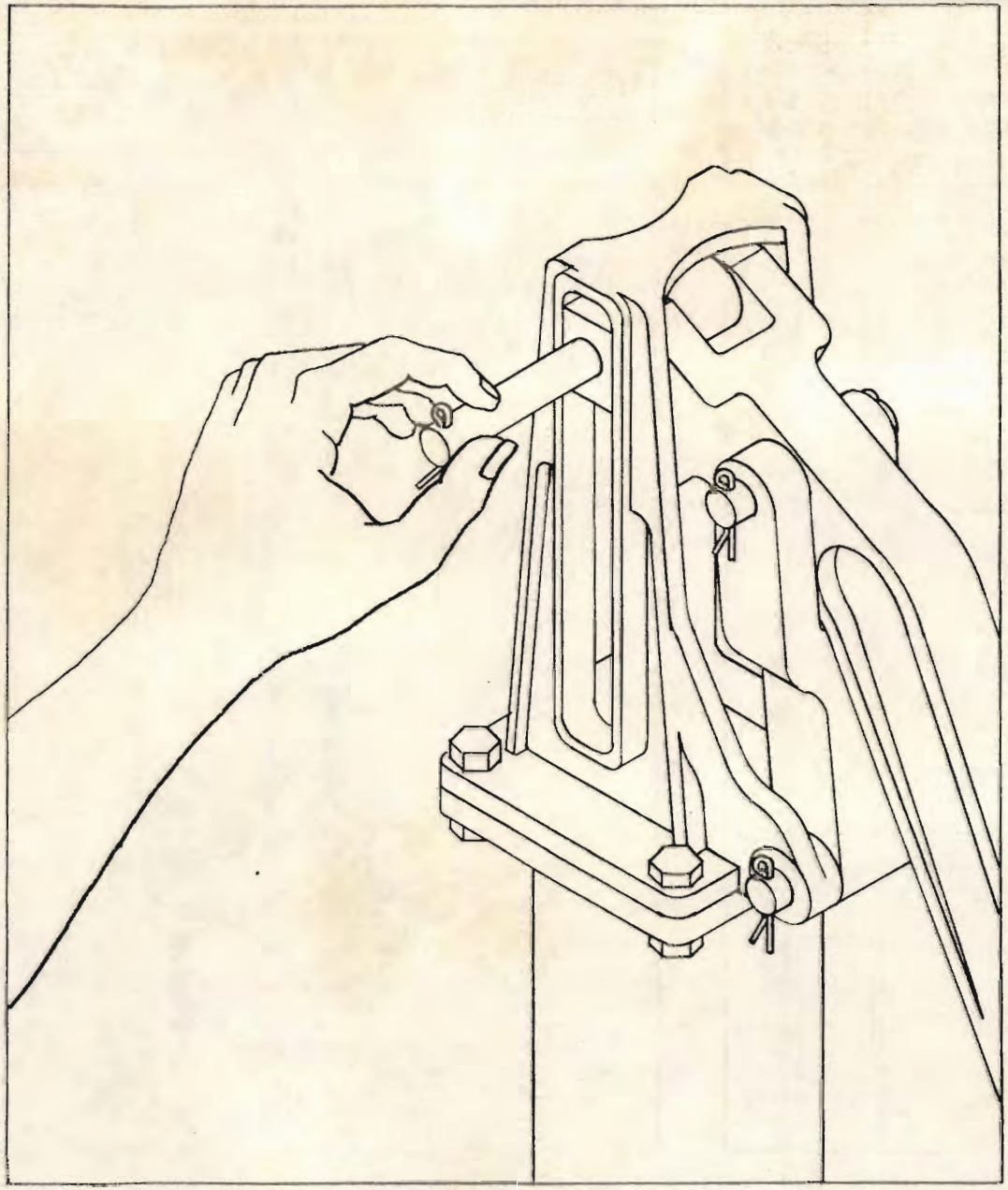

Lubricate the connecting pins then reinsert them. Do not hammer the pins into place. Insert the retaining pins back into the connecting pins.

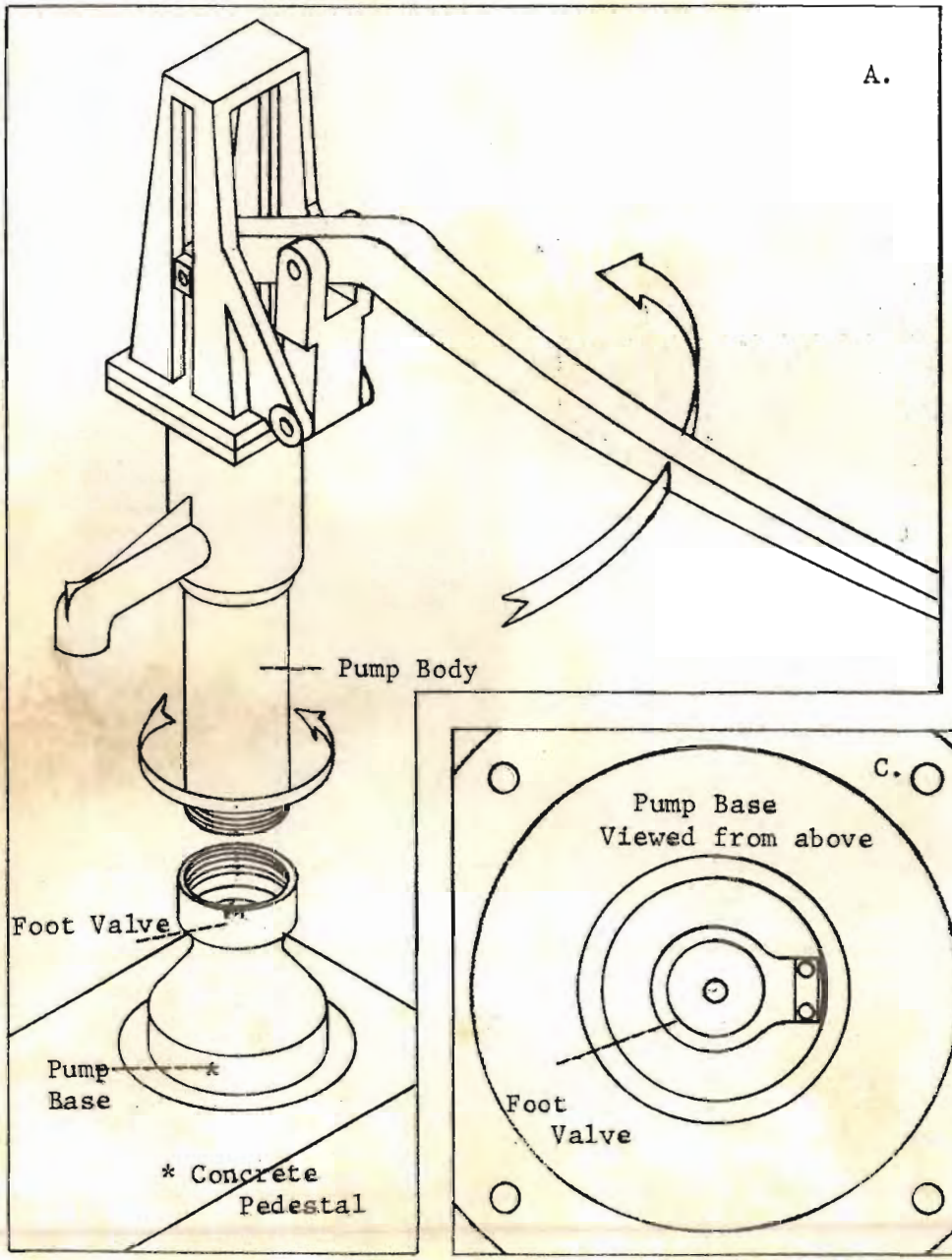

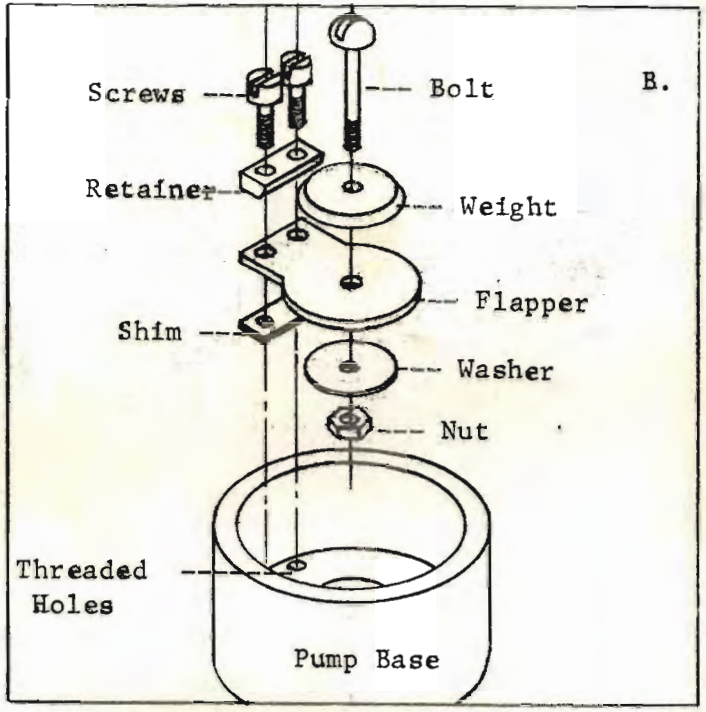

A. Unscrew the pump body from the pump base. If a large pipe wrench is unavailable, the handle may be used as a lever.

B. Replace the old footvalve flapper. Wipe any oil or dirt off of the valve seat. Reassemble as shown.

C. The reassembled valve should be centered as shown when viewed from above.

Appendix F

CISIR LAB TESTING RESULTS

PREVIOUS PAGE BLANK

TEST PROCEDURE - LIFE CYCLE TEST

THREE YEAR SIMULATION

I) Test Setup

A) Initial Setup

1) Fill in the identifying information on the record sheet for the components of each pump. The type of footvalve and cups for each pump are to remain the same throughout the test period.

2) Install the footvalves in the pump bases, bolt the bases to the test stand and attach the PVC drop pipe.

3) Fill the water drums. Maintain the water level during the testing so that the drop pipe will always be submerged.

B) Footvalve Leak Test

1) Fill the drop pipe with water.

2) Unscrew the pump body from the 3" pipe section.

3) Fill the pipe section with water.

4) After one hour, measure the fall in the water level in the pipe.

5) Record the leak flow rate on the record sheet.

C) Zero the stroke counter.

II) Running The Test

A) General

1) Assemble pump, checking all joints and screwed fittings for tightness.

2) Secure the pump to the test stand and driver arm.

3) Check all couplings and joints on the test stand for tightness.

4) Start the test stand motor.

5) Ascertain that all is working properly with no unusual noises or vibrations.

PREVIOUS PAGE BLANK

B) Lubrication Schedule

Grease all wear points as per the lubrication schedule for each pump:

pumps 1 & 2 - every 2×10^5 strokes (monthly lubrication)
pump 3 - every 5×10^4 strokes (weekly lubrication)
pump 4 - every 1.2×10^6 strokes (bi-yearly lubrication)

Lubricate the test stand joints daily.

C) Pump Flow Rate

1) Measure the pump flow rate every 8 hours of operation.

2) Record the flow rate and approximate number of strokes at the time of measurement.

3) Replacement of leather cups
The leather cups are to be replaced when the flow rate drops to 50% of its initial value.

a) Record the number of strokes.

b) Replace the cups with ones of exactly the same type.

c) Measure the wear on the PVC liner every time a cup set is replaced.

D) Footvalve Leak Test During Operation

1) The footvalve leak test of Section I.B needs to be conducted at least four times over the life of the valve. Initially, the interval between leak tests is to be 5×10^5 strokes but may be altered depending on the life of the valves.

2) Replacement of footvalves
If the footvalve allows all the water to leak out of the pipe section in less than an hour, the valve should be cleaned and the test repeated. If the valve cannot be made to hold water for 1 hour, it is to be replaced with another valve of the same type.

Note: During all footvalve leak tests, the joint between the pipe section and base should be watertight. If this is not so the test results will be inaccurate.

3) Measure and record the valve seat height at 4 locations around the seat and 90° to each other.

4) Record any signs of unusual wear on the valve or valve seat.

E) One Million Stroke Tests

1) Measure ond record the mean, maximum, and minimum diameters of the following upon the completion of every 1 x 10^6 strokes:

a) cap/fulcrum pin - 3 locations

b) fulcrum/handle pin - 3 locations

c) handle/rod pin - 5 locations

d) cap/fulcrum bushings - 3 locations

e) fulcrum/handle bushings - 3 locations

f) handle/rod bushings - 3 locations

2) Measure and record the width of the slider blocks from centerline to edge of both slider blocks and each pump.

3) Measure and record the width of both slider block tracks on each pump at 2" intervals.

Note: Take care to reposition contacting parts in the same position relative to one another as before disassembly for measurement.

G) Component Failure

1) Stop the test stand motor.

2) Record the number of strokes from the stroke counter.

3) Remove the failed component.

4) Record:

a) Which component failed.

b) Physical dimensions of failed component.

c) Probable mode of failure.

5) Replace the failed component with another of exactly the same type.

6) If the failed component was the footvalve, repeat the leak test and record the leak flow rate.

7) Reassemble pump. Fasten to test stand.

8) Measure pump flow rate if failed component was a cup.

9) Continue with the testing.

10) Repeat this procedure whenever any component fails during the test period of 8 x 10^6 strokes.

H) Test Continuation
Continue with the test repeating the above tests at the prescribed intervals until 8 x 10^6 strokes are completed.

III) Test Reporting

A) Status Reports
Brief status reports on the status of testing are to be submitted to Georgia Tech on a monthly basis.

B) Final Report
At the conclusion of testing, a final report will be submitted to Georgia Tech covering all phases of the test. Included will be test setup, test methods, and test results with appropriate tables and graphs.

U S A I D

HAND PUMP

TESTING PROGRAM

C.I.S.I.R.

Interim Report

On the Performance and Evaluation of USAID Hand-Operated Water Pumps manufactured by Somasiri Huller Manufactory, Sri Lanka

Submitted to

Georgia Technical Research Institute,
USA

on

13. November, 1981

CONTENTS

0.	INTRODUCTION	p. 3
1.	CHOICE OF HAND PUMP FOR RURAL WATER SUPPLY	3
	1.1 Principle of Operation	4
	1.2 Manufacture of Hand Pump in Sri Lanka	5
2.	TESTING AND EVALUATION	6
	2.1 Test Stand	6
	2.2 Test Procedure	6
	2.3 Evaluation of Test	7
3.	CONCLUDING REMARKS	7
4.	FIGURES AND TABLES	9

- - - - - - -

Dipl.-Ing. P. Jegatheswaran
MECHANICAL ENGINEER

A.R.B.J. Attanayaka
TECHNICAL ASSISTANT

Dr.rer.nat. M.H.C. Wijetunge
DEPUTY DIRECTOR

Dr.L.P. Mendis
HEAD, RUBBER TECHNOLOGY SECTION

PREVIOUS PAGE BLANK

0. INTRODUCTION

At the request of USAID, Sri Lanka, a testing program on Hand Pumps was initiated at the Ceylon Institute of Scientific and Industrial Research (CISIR). These pumps are manufactured in Sri Lanka by Messrs. Somasiri Huller Manufactory at 18, Parakrama Avenue, Kohuwela, Nugegoda.

The testing procedure laid down by Georgia Technical Research Institute (GTRI), was adopted to study the :

* performance
* wear and tear
* necessary alterations and modifications

and * operating problems

of the hand pump.

This report gives the results of a three-month monitoring period.

It is the intention of this interim report to inform the reader - technical as well as non-technical - with facts and figures about the tests carried out at this Institute.

I. CHOICE OF HAND PUMP FOR RURAL WATER SUPPLY

The selection of a Hand Pump for Rural Water Supply purposes has to match the conditions in the rural areas. A reciprocating

type of Hand Pump was evolved as the best solution for this purpose.

1.1 Principle of Operation

A reciprocating pump consists of a piston which has a reciprocating motion in a closely fitting cylinder. The upward movement of the piston (suction stroke) forms a partial vacuum in the cylinder and the atmospheric pressure forces the liquid in the sump into the cylinder. The suction and the discharge of the liquid is controlled by an inlet valve and an outlet valve.

The theoretical suction head is limited to 10.3m of water if the atmospheric pressure acting on the sump is 1.03 kgf/cm^2. In practice, due to the separation of vapours, the suction head is limited to 7.70 meter (for water).

The performance of this pump is given in the form of coefficient of discharge. The ratio of the actual discharge Q_a to the theoretical discharge Q is called the

$$\text{Coefficient discharge} \quad C_d = \frac{Q_a}{Q}$$

Theoretical discharge $Q = \gamma . A . l . n$

γ = density of water

A = Area of the piston

l = The stroke

n = number of strokes per second

Q_a = Actual discharge

The volumetric performance of the pump is given by

$$\text{percentage slip} = \frac{\text{volume swept} - \text{volume discharged}}{\text{volume swept}} \times 100[\%]$$

1.2 Manufacture of Hand Pump in Sri Lanka

The Hand Pumps tested are being manufactured in Sri Lanka by Messrs. Somasiri Huller Manufactory, according to specifications provided by the Georgia Technical Research Institute (GRTI) of USA.

Technical Data

Type	:	Hand-Operated single Reciprocating pump	
Height above ground level	:	(42") 1066.8	mm
Weight	:		kg
Bore	:	(3") 76.2	mm
Stroke	:	(6") 152.4	mm
Coefficient of discharge	:	0.63	

2. TESTING AND EVALUATION

2.1 Test Stand

Two pumps were fitted on the Test Stand. This Test Stand was mounted on an elevated platform so as to maintain a suction head of 19 feet (5791 mm). Both pumps were driven by a 0.5 HP Electric Motor. A stroke-counter was fitted on to the pulley, which was rigidly connected to the pump handle, thus eliminating any false readings due to slip in the transmission. The pumping rate was 40 - 48 strokes per minute. The variation of the stroke was mainly due to the slip of the driving belts.

2.3 Test Procedure

The total period of testing for this interim report was four (4) months (July - August, 1981). The actual operation period was three (3) months and one (1) month was the total time involved for periodical wear measurements. This testing period simulates 3 years of actual operation for 200 users at a consumption rate of 6 gallons (22.7 litres) of water per day. During this period the pumps have done 4.10^6 strokes each. The test bench was under 24-hour supervision.

The flow-rate was measured with the help of a stop watch and a calibrated vessel. The other moving parts were taken out

and examined periodically and wherever necessary they were replaced.

Pump No. 1 was lubricated after every 4.10^4 strokes and Pump No.2 after every 2.10^5.

2.3 Evaluation of Test

The flow-rate as a function of the monitoring period is seen in figure 1. Table 1 gives details with reference to operation times and flow rates of the pumps. The failures and the adopted remedial measures are given in Table 2.

3. CONCLUDING REMARKS

The brass foot valves supplied with the pump failed during the test. The valve seats and weights were modified. The original rubber flappers were replaced with flappers developed at the CISIR out of natural rubber with a hardness of $60 \pm 3^{\circ}$ (shore A). The formulation of this rubber compound is as follows :

Components	Parts by wt.
Rubber	100
ZnO	5
Stearic acid	1
SRF (carbon black)	50
Whiting	3
Antioxident (IPPI)	3

Santocure MOR	2
TMTD	0.5
Sulphur	0.5

The original rubber flappers were 3 mm thick but these were found to fail in service. They were replaced with flappers of 5 mm thickness.

A rubber flapper of thickness 0.16" with a metal disc of diameter 1 7/8" and maximum weight 115 gms. (Total weight of the moving parts) was used in the pump No. 2, while a rubber flapper of a different type (canvas reinforced) having a thickness of 0.20" and similar weight, as used in pump No.2, was fitted to the Pump No. 1.

It was observed that after three (3) applications of lubricant (grease) [every 5×10^4 strokes in the case of Pump 1 and every 2×10^5 strokes in the case of Pump 2] the guide ways and slide-blocks did not show any need for further lubrication, since adequate quantities of lubricant were retained in those wear surfaces. Proper lubrication of the pivoted points was, however, not possible.

The water used for the test had a pH of 6.5 and a conductivity of 100 dionic units.

The final report on this test program is scheduled for release at the end of 8.10^6 strokes.

TABLE 1

Operation Times & Flow Rates of the Pump

Operating period (No. of Strokes)	Time (hrs)		Pump Flow Rate U.S. gallon/min. (measured at the end of the testing period)	
	Operation	For attention to repairs and failures		
			Pump No.1.	Pump No.2
$(0 - 1 \times 10^6)$	400	48	10.9	10.6
$(1 \times 10^6 - 2 \times 10^6)$	375	9	10.9	9.7
$(2 \times 10^6 - 3 \times 10^6$	368	16	10.9	10.0
$(3 \times 10^6 - 4 \times 10^6)$	354	13	9.0	9.0

(1 US Gallon = 3.79 litres)

TABLE 2

Failures and Remedies during Test Period

	No. of strokes	Failure	Remedy
1.	206,700	Rubber flapper of the foot valve of pump No. 1 failed. (thickness of the flapper = 0.13")	After 300,000 strokes the foot valve of pump No. 1 and 2 were modified with : * Valve seats having round edges * Rubber flappers of better quality * Weights of larger diameter equal to the external diameter of valve seats.
2.	400,000	The plunger rod of the pumps started rubbing against its passage through the pump cap.	This action was avoided by increasing the diameter of the passage by boring at two stages * after 1,000,000 strokes * after 3,000,000 strokes
3.	1,000,000	The lower leather cup of the plunger of pump No.2 teared (observed after dismantling for measurements).	Replaced with a similar cup.
4.	2,000,000	Bushings and the pins at the pivoted point between the pump handles and the fulcrums of both pumps were seriously worn out.	
5.	2,417,700	Plunger rod of pump No. 1 was fractured at the lower end. (Stress concentration due to the swinging action of the plunger rod.	Testing was continued by replacimg the damaged rod with a new plunger rod.
6.	2,888,600	Plunger rod of pump No. 2 failed at the lower end.	Failed rod was replaced with a new rod and fixed to the plunger without leaving a gap of reduced diameter above the checknut.
7.	3,000,000	Excessive tightness of the plunger. (Eccentricity between the periphery and the bore of the leather cups.)	Cups were replaced.
8.	3,151,200	Plunger rod of pump No. 1 failed at the lower end.	Modified plunger rod was directly screwed to the plunger without checknut.

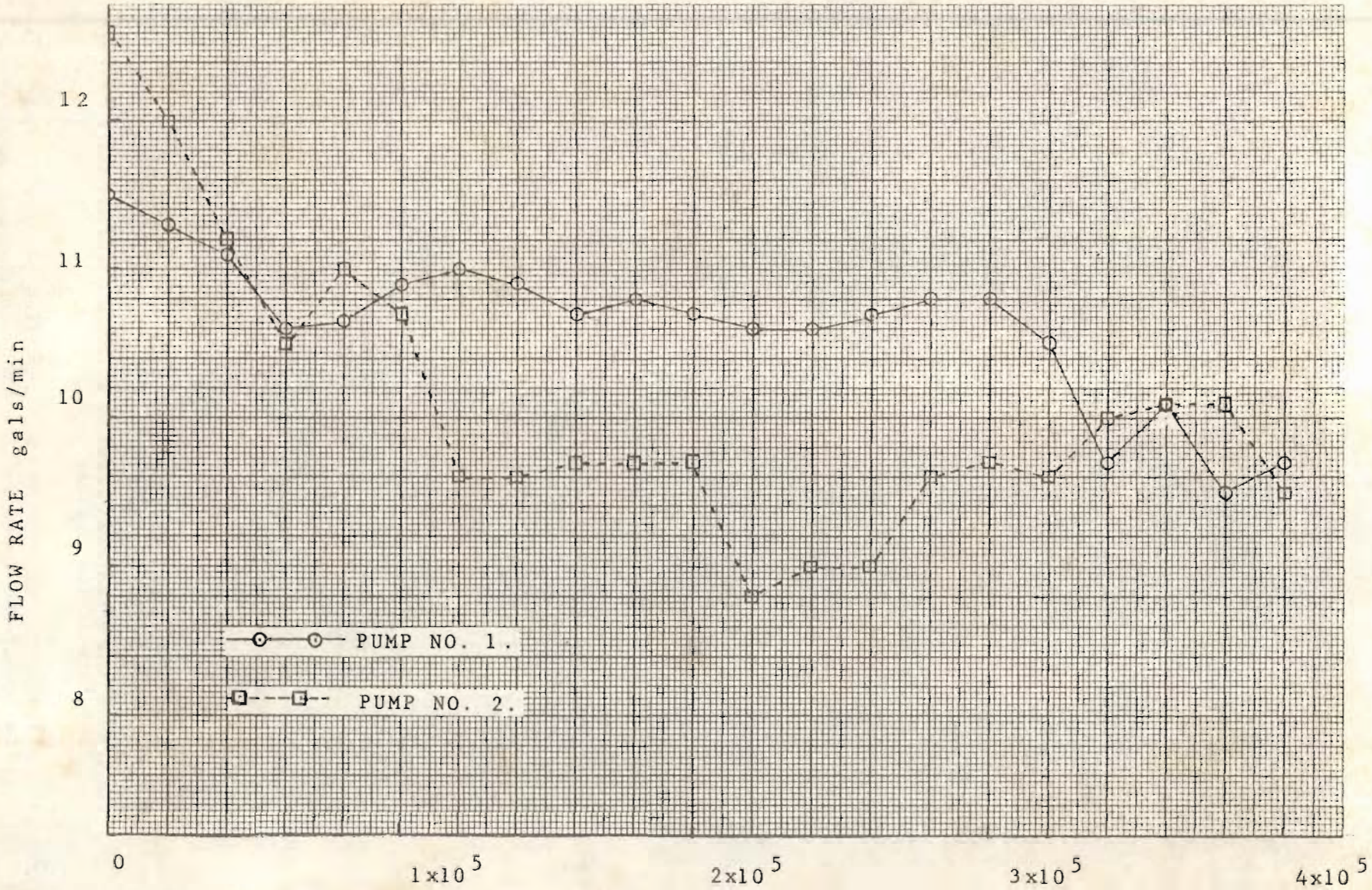

STROKE - COUNTER READING

FLOW RATE AS A FUNCTION OF MONITORING PERIOD

FIGURE 1

Final Report

The final report from CISIR has not been received as of this printing. The final report will be made available for distribution when it has been received by Georgia Tech.

Appendix G

WATER QUALITY

PREVIOUS PAGE BLANK

Chemical Test Parameters

The sanitary significance of each of the chemical test parameters can be briefly summarized as follows:

Chloride. Chloride occurs in all natural waters in varying concentrations and can be used as a measure of salinity. A brackish taste can result from concentrations ranging from 100 to 250 parts per million (PPM). Also, a high concentration may be an indicator of possible pollution from sewage sources. A high chloride content also exerts a deleterious effect on metallic pipes and structures.

Color. Color is generally attributed to dissolutions of organic materials and is not directly tied to pathogens or toxic substances. Although noticeable above 5 units, only color above 15 units is usually aesthetically unacceptable.

Turbidity. Turbidity is also a measure of aesthetic, rather than sanitary acceptability. In ground waters, however, a high turbidity level may indicate inadequate protection from surface wash and possible bacterial contamination. Sparkling clear water implies a turbidity of less than one unit, while waters having up to 25 units of turbidity may be acceptable, depending on the consumers.

Hardness. Hardness is often described as the ability of water to precipitate soap. It is a measure of the concentrations of calcium and magnesium ions present. In general, water softer than 50 PPM ($CaCO_3$) is aggressive and waters in excess of 80 PPM tend to waste soaps. Excessive hardness (above 150 PPM $CaCO_3$) contributes to the deterioration of fabrics and can affect the growth of coliform bacteria.

Alkalinity. Alkalinity is described as the ability of water to neutralize acids. It has little sanitary significance; however, concentrations in excess of 500 PPM may cause corrosion of iron pipe. Highly alkaline waters are also unpalatable.

Iron. Iron is present in most groundwaters. It has little health significance, but in concentrations greater than 0.3 PPM it can impart a brownish color to laundry. In excess of 1.0 PPM it can cause an unpleasant taste and a bluish-black color in coffee and tea.

Manganese. Manganese also tends to stain laundry and plumbing fixtures. In concentrations of greater than 0.5 PPM, it can give water an aesthetically unacceptable turbidity, and turn tea black. It has little if any health significance, but in concentrations greater than 1.0 PPM can give a metallic taste to water.

PREVIOUS PAGE BLANK

Sulfate. Sulfate in excess of 250 PPM has laxative effects on humans and animals. Sulfates can be organically reduced to produce hydrogen sulfide gas with its associated odor and corrosion problems. Hydrogen sulfide gas is extremely poisonous and can also be explosive. Combined with chloride and alkalinity data, sulfate gives a measure of corrosive potential:

$$\text{Corrosion Ratio} = \frac{(Cl^- + SO_4^{2-})\ (mg/l)}{\text{Alkalinity as } CaCO_3\ (mg/l)}$$

Waters with a corrosion ratio ≥ 0.1 are aggressive.

Nitrate. Nitrate concentrations in excess of 45 PPM can cause methemoglobinemia ("blue babies") when they are converted to nitrites in baby diets. Natural waters generally contain nitrate; concentrations greater than 1.0 PPM may indicate pollution from fertilizers or organic matter.

Nitrite. Nitrite, an intermediate oxidation stage of nitrogen, is produced during the natural conversion of ammonia to nitrate. Even in sewage treatment effluents, it seldom appears in concentrations of 1.0 PPM because it is rapidly oxidized to the nitrate form. Its concentration in natural waters rarely exceeds 0.1 PPM.

Chemical Test Results

The chemical test results by well and by regional average are presented in Tables 6 through 10 and Figures 29 through 31, respectively.

Table 6

CHEMICAL TEST RESULTS -- KALUTARA

SITE OR VILLAGE NAME	DATE OF TEST MO.D.YR	ALKALINITY mg/l	HARDNESS mg/l	COLOR Units	TURBIDITY Units	IRON mg/l	MANGANESE mg/l	CHLORIDE mg/l	SULFATE mg/l	NITRITE mg/l	NITRATE mg/l	pH Units
	W.H.O. STANDARDS	500	200	50	25	1.0	0.5	600	400	0.10	45	6.5-9.2
Ukwatta	1/27/81	-	115	0	0	0.10	0.60	70	60	0.015	8.9	5.4
	4/3/81	25	125	20	8	0.07	0.30	16	0	0.003	4.5	6.5
	4/18/81	50	65	10	5	0.05	0.40	10	5	0.002	6.5	6.2
Vettawa E.	1/30/81	-	17	0	0	0.02	0.40	11	1.0	0.005	1.4	4.9
	4/3/81	24	36	0	0	0.21	0.20	9	3.0	0.008	3.5	7.1
	7/18/81	200	39	0	0	0.05	0.25	-	1.0	0.006	2.0	6.2
Vettawa W.	1/17/81	-	28	25	10	0.05	0.90	0	12	0.021	0.7	5.0
	4/3/81	68	74	30	5	0.15	0.20	17	3	0.008	25	5.9
	7/18/81	110	35	45	8	0.05	0.30	-	3.5	0.010	3.2	6.0
Bollesagama	2/3/81	-	-	0	0	0.05	0.20	12	-	-	-	4.6
	3/31/81	64	100	0	0	0.04	0.40	9	4.0	0.004	5.5	6.7
	7/18/81	30	39	35	5	0.08	0.10	-	3.2	0.005	6.3	5.0
Adhikarigoda	2/3/81	-	11	0	0	0.06	0.40	13	6.5	0.007	6.6	4.7
	4/3/81	20	28	10	2	0.11	0.00	15	-	0.006	5.9	6.5
	7/18/81	10	15	5	1	0.05	0.10	-	3.5	0.005	2.4	5.4
Serupita	2/3/81	-	77	0	0	0.05	0.25	5	23.5	0.003	1.0	6.2
	4/3/81	64	80	45	5	0.13	0.20	6	5.0	0.003	2.9	6.8
	7/18/81	60	70	25	4	0.05	0.20	-	3.5	0.004	2.4	6.2
Liyanagoda	4/3/81	25	70	0	0	0.04	0.40	14.0	8.0	0.003	3.5	6.2
	7/18/81	20	63	4	1	0.07	0.33	-	7.7	0.003	3.7	6.2
Koodapaligoda	4/3/81	70	62	0	0	0.08	0.20	13.0	5.0	0.003	3.3	6.2
	7/18/81	66	62	0	0	0.09	0.20	-	5.2	0.003	3.3	6.2

Table 7

CHEMICAL TEST RESULTS -- HAMBANTOTA

SITE OR VILLAGE NAME	DATE OF TEST MO.D.YR	ALKALINITY mg/l	HARDNESS mg/l	COLOR Units	TURBIDITY Units	IRON mg/l	MANGANESE mg/l	CHLORIDE mg/l	SULFATE mg/l	NITRITE mg/l	NITRATE mg/l	pH Units
	W.H.O. STANDARDS	500	200	50	25	1.0	0.5	600	400	0.10	45	6.5-9.2
Ethgalmulla	2/21/81	484	114	25	10	0.02	0.15	4.4	7.3	0.003	1.1	7.6
	7/21/81	284	144	40	6	0.15	0.40	-	21	0.005	36.0	7.0
Ralua	2/11/81	-	242	0	0	0.05	0.30	29	60	0.001	9.0	7.2
	7/21/81	266	190	0	0	0.05	0.30	-	65	0.008	14.2	5.4
Panburawa	2/21/81	146	128	55	50	0.03	0.25	34	16	0.006	0.7	6.6
	7/21/81	148	144	40	6	0.11	0.45	-	10	0.010	29.0	6.2
Oluara	2/11/81	-	43	30	3	0.03	0.40	21	0	0.002	0.9	6.2
	7/21/81	62	510	0	0	0.05	0.50	-	5	0.010	48.0	5.5
Namaneliya	2/11/81	-	30	0	0	0.10	0.40	33	2	0.000	1.1	5.8
	7/21/81	37	50	0	0	0.05	0.20	-	3	0.005	44.0	6.7
Karametiya	2/11/81	-	325	110	35	0.35	0.25	163	11.0	0.003	6.3	6.8
	7/22/81	180	225	100	30	0.00	0.20	-	15.0	0.010	32.0	6.2
Labuhengoda	2/21/81	154	162	20	0	0.04	0.00	36	6	0.006	1.1	6.5
	7/22/81	136	143	50	15	0.07	0.00	-	7	0.008	16.5	6.4
Welepitiya	2/21/81	262	266	25	0	0.03	0.35	52	10	0.002	0.9	6.5
	7/22/81	278	275	0	0	0.08	0.40	-	9	0.005	42.0	6.4
Julampitiya	2/11/81	-	210	0	0	0.02	0.20	65	18	0.002	0.8	7.0
	7/22/81	183	207	25	10	0.08	0.3	-	8	0.007	39.0	6.6
Andrawewa	6/17/81	466	300	10	0	0.10	0.25	342	150	0.007	1.5	-
	7/24/81	1000	370	45	12	0.07	0.20	-	220	0.005	39.0	7.0

Table 8

CHEMICAL TEST RESULTS -- KANDY

SITE OR VILLAGE NAME	DATE OF TEST MO.D.YR	ALKALINITY mg/l	HARDNESS mg/l	COLOR Units	TURBIDITY Units	IRON mg/l	MANGANESE mg/l	CHLORIDE mg/l	SULFATE mg/l	NITRITE mg/l	NITRATE mg/l	pH Units
	W.H.O. STANDARDS	500	200	50	25	1.0	0.5	600	400	0.10	45	6.5-9.2
Kupuliyadde	4/11/81	136	190	0	0	0.05	0.25	8.0	34	0.018	3.9	8.0
Tikiriwell	4/11/81	112	126	0	0	0.05	0.20	11.0	14	0.024	3.4	7.5
Bellwood	4/11/81	10	10	100	30	0.05	0.00	0.0	0	0.006	1.8	7.6
Uda Deltota	4/11/81	0	32	0	0	0.04	0.40	9.0	2	0.008	4.3	6.5

Table 9

CHEMICAL TEST RESULTS -- AMPARAI

SITE OR VILLAGE NAME	DATE OF TEST MO.D.YR	ALKALINITY mg/l	HARDNESS mg/l	COLOR Units	TURBIDITY Units	IRON mg/l	MANGANESE mg/l	CHLORIDE mg/l	SULFATE mg/l	NITRITE mg/l	NITRATE mg/l	pH Units
	W.H.O. STANDARDS	500	200	50	25	1.0	0.5	600	400	0.1	45	6.5-9.2
Weheregama	4/25/81	60	44	60	18	0.06	0.10	160	2.5	0.009	1.2	-
Vijayapura	4/25/81	212	104	40	10	0.15	0.00	44	20	0.008	1.5	-
Samanthurai	4/25/81	140	140	20	5	0.05	0.00	42	56	0.010	1.8	-
Karativu #1	4/25/81	373	345	20	5	0.12	0.05	180	80	0.006	1.4	-
Karativu #2	4/25/81	60	89	30	10	0.02	0.00	-	18	0.018	1.0	-
Periyamullativu	4/25/81	110	148	15	4	0.09	0.00	250	75	0.018	3.0	-
Madawalande	4/25/81	52	42	55	18	0.08	0.00	20	5	0.007	2.0	-
Kaeselwatta	4/25/81	36	93	0	0	0.04	0.00	46	3	0.032	6.0	-

Table 10

CHEMICAL TEST RESULTS -- JAFFNA

SITE OR VILLAGE NAME	DATE OF TEST MO.D.YR	ALKALINITY mg/l	HARDNESS mg/l	COLOR Units	TURBIDITY Units	IRON mg/l	MANGANESE mg/l	CHLORIDE mg/l	SULFATE mg/l	NITRITE mg/l	NITRATE mg/l	pH Units
	W.H.O. STANDARDS	500	200	50	25	1.0	0.5	600	400	0.10	45	6.5-9.2
Manthuvil #1	6/17/81	265	425	25	10	0.05	0.40	810	95	0.059	0.9	-
	7/16/81	240	468	25	10	0.10	0.30	1035	125	0.05	25	7.6
Manthuvil #2	6/17/81	270	738	10	5	0.10	0.25	1750	150	0.05	1.5	-
	7/16/81	263	690	15	5	0.10	0.35	-	166	0.01	42	7.4
Kaithady	5/9/81	444	100	50	10	0.04	0.20	108	55	0.015	2.4	-
	7/16/81	365	195	45	10	0.05	0.25	-	63	0.010	38	7.8
Fatima	5/9/81	180	328	20	9	0.04	0.25	600	120	0.009	2.9	-
Vadukkodai	5/9/81	324	320	30	5	0.05	0.20	408	-	0.005	2.9	-
Kalevadewathai	5/9/81	328	312	15	5	0.08	0.55	300	168	0.009	4.9	-

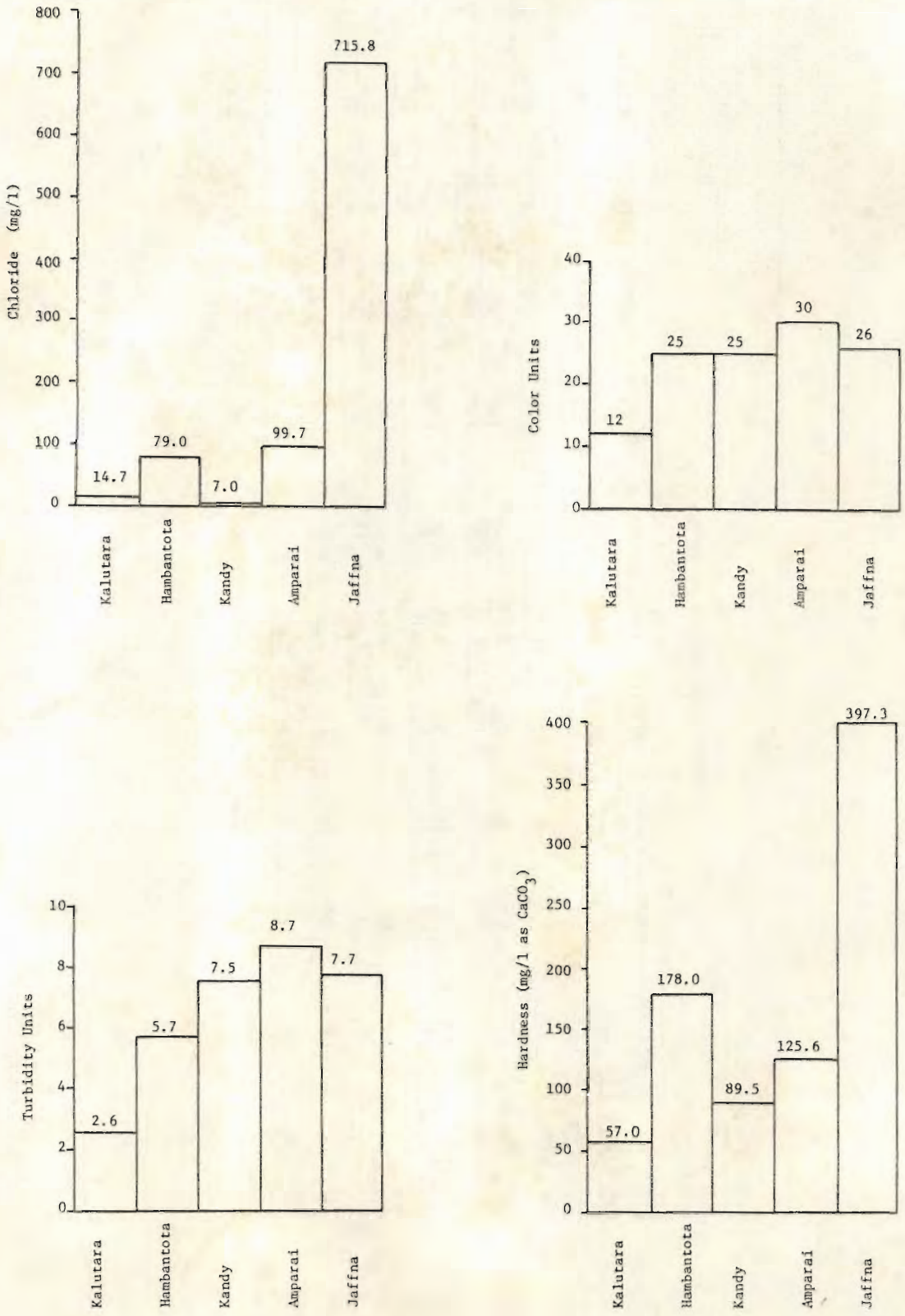

Figure 29. Chloride, Color, Turbidity and Hardness Regional Averages

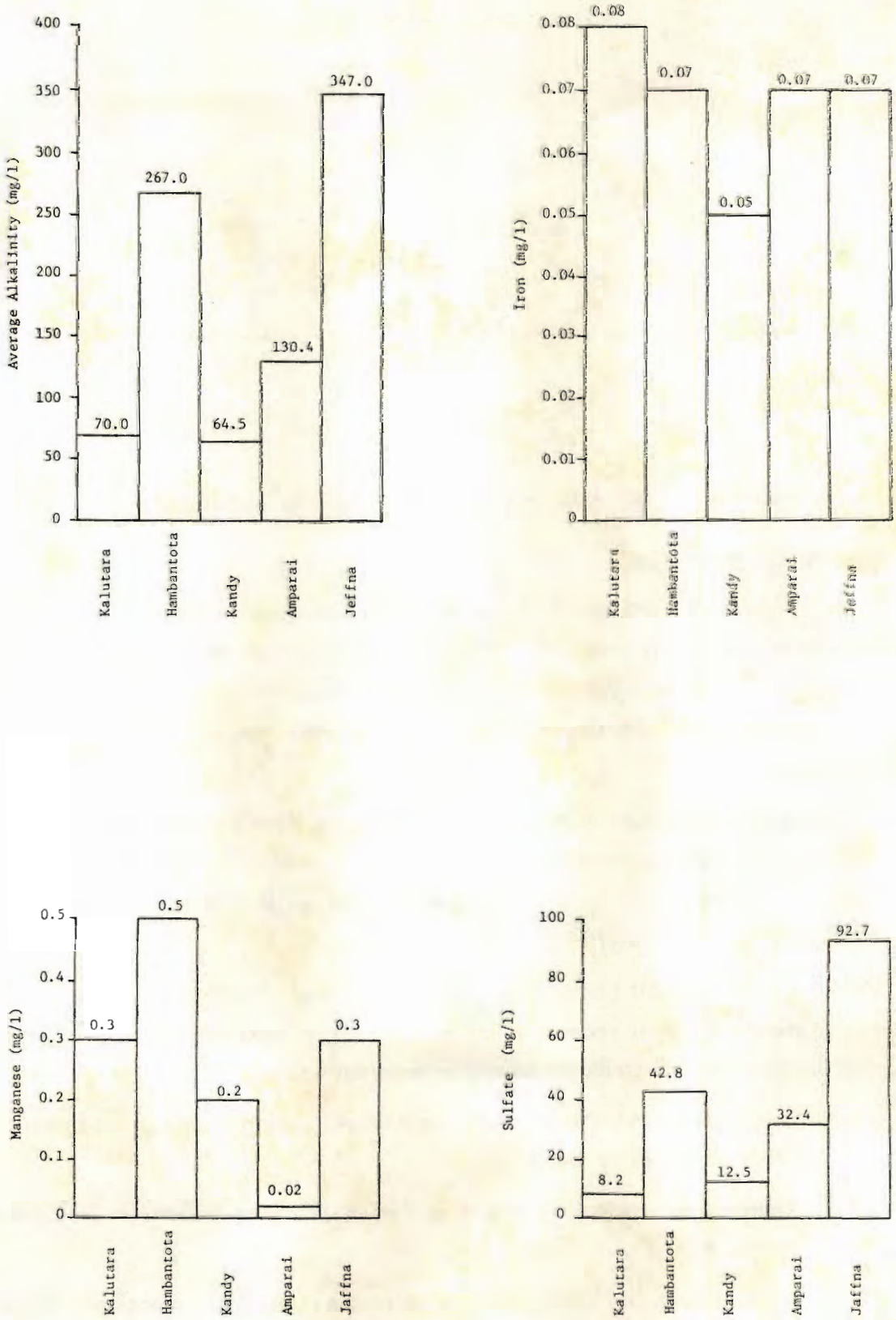

Figure 30. Alkalinity, Iron, Manganese and Sulfate Regional Averages

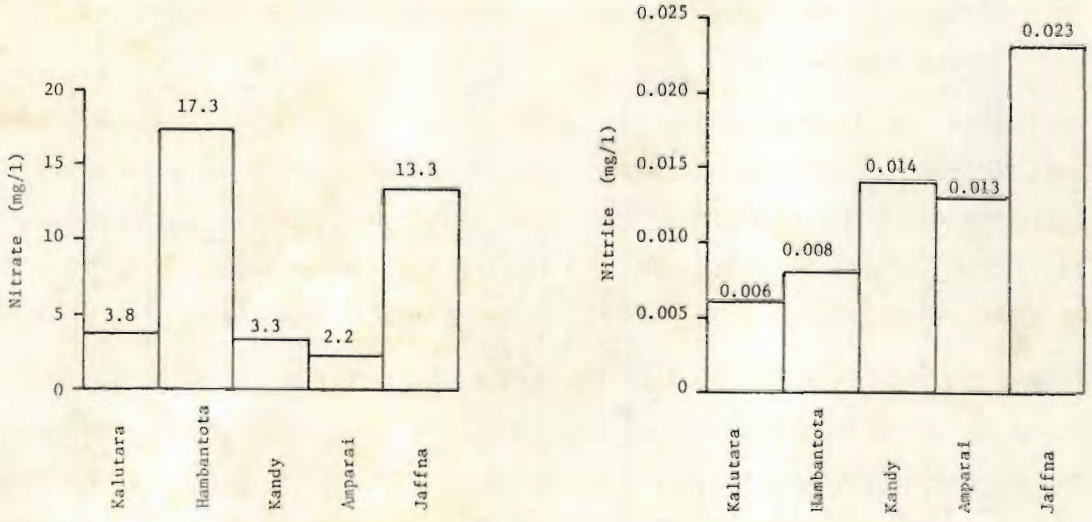

Figure 31. Nitrate and Nitrite Regional Averages

Bacteriological Monitoring

All sites were tested for coliforms before the wells were rehabilitated. Of the 39 wells developed, only one well was free of fecal contamination before pump installation. Following pump installation, each well was shock disinfected and retested. After shock disinfection, none of the wells showed evidence of fecal contamination.

The shock disinfection method, described below, does not provide a continuous chlorine residual. Although the well structure is designed to force the sullage water to filter through the soil layers and re-enter the well only at the bottom, the continued safety of the water cannot be fully assured.

Experiments in Sri Lanka, as well as in other Georgia Tech hand pump programs, show that well recontamination eventually does occur. The source of recontamination can be attributed to one or a combination of the following:

1. Bacterial travel through soil from some external source (latrines, fish ponds, other water bodies).

2. Removal of manhole cover to gather water with buckets if long queues for water arise.

3. Recontamination during pump repair--the pump components may become contaminated or contaminated water may be introduced during repair operations.

4. Improper well seal--the base of the pump, the well casing, and/or the apron may be leaking.

It is often impossible to isolate a single source of recontamination. In general, however, the most difficult source to control is the bacteria traveling from latrines. In an attempt to study the rate of recontamination, an intensive testing program was organized to test fifteen wells in Kalutara and Hambantota. The test sites chosen and their outstanding characteristics are listed in Table 11.

These wells were redisinfected, then tested for coliforms approximately every other week. If contamination was indicated, the wells were redisinfected and monitored further. For this purpose, local government officers in each district were instructed in sampling and disinfection methods. Samples taken by the Technical Officers of the ACLG in the districts were delivered immediately to the chief chemist of the National Water Supply and Drainage Board (NWSDB) in Ratmalana. The samples were analyzed for coliforms using the multiple tube fermentation confirmed test method. Results of the intensive testing program are summarized in Tables 12 and 13.

Examination of the data with respect to the characteristics listed in Table 11 shows no definite correlations between latrine distance from well and rate of recontamination. Neither can correlations be made with well depth, raised headwall vs. ground level structure, or other water bodies.

In an attempt to establish a regional disinfection schedule, the longest and shortest periods before recontamination after disinfection for each well site in the region were averaged. In Kalutara, where the soil is mostly sandy clay, the average longest contamination-free period was 7.5 weeks, and the average shortest period was 6.3 weeks. In Hambantota, with mostly clay and clay sands, the average longest and shortest periods between recontaminations were 4.3 and 3.1 weeks, respectively. Soil types for each district are summarized at the end of this appendix.

Individual sites under similar conditions yield quite varied results, which may be indicative of external interferences, such as bucket dipping or repair operations. Therefore, based on the data and the test conditions, it would be very difficult to statistically justify an estimation of a disinfection frequency for each district, or even each well. However, based purely on the averages of data for this test, a disinfection frequency of three weeks in Hambantota seems reasonable. The trends shown in the Kalutara District defy regional averaging.

Table 11

SITES SELECTED FOR BACTERIOLOGICAL MONITORING

Site	Well Type	Depth Ft	Latrine Distance Ft	Other Water Bodies	Soil Type	Weeks Before Recontamination	
						Shortest	Longest
Vettawa East	Raised	15.0	120, 125, 125		Sandy Clays	2	10
Vettawa West	Ground	14.0	120, 150		Sandy Clays	2	2
A.G.A.	Ground	8.0	None		Sandy Clays	10	10
Koodapaligoda	Raised	21.5	100, 115, 150		Sandy Clays	2	2
Serupita	Raised	16.0	200		Sandy Clays	8.5	8.5
Adhikarigoda	Ground	12.0	90	Bathing Well at 95 ft.	Sandy Clays	6	7
Ukwatta	Raised	19.5	120, 180		Sandy Clays	16	16
Liyanagoda	Ground	19.5	150, 175		Sandy Clays	2	5
Bollessegama	Ground	18.0	100, 150		Clay	7	7
Ethgalmulla	Raised	24.5	None	Rice Paddy at 75'	Clay	-	5
Ralua	Ground	29.0	240, 300		Clay	3	3
Panburawa	Raised	23.5	None		Clay, Sand	3	3
Oluara	Ground	25.0	200, 300		Clay, Sand	3	3
Namaneliya	Ground	16.0	None	Open Well at 50 ft.	Clay, Sand	3	3
Karametiya	Raised	39.0	120, 160, 300		Clay, Sand	3	6

Table 12

BACTERIOLOGICAL TEST DATA FOR KALUTARA SITES FOR 1981*

Test Dates / Site Name	7/23	7/30	8/6	8/17	8/25	9/7	9/22	10/6	11/2	11/17	Disin-fection Dates
Vettawa East	0	0	0	22	23	0	0	0	0	-	7/29, 9/6
Vettawa West	23	0	0	33	278	2	9	7	40	0	7/29, 9/6, 11/16
Koodapaligoda	0	0	0	0	0	0	0	0	1600	0	7/29, 11/16
Liyanagoda	13	0	0	0	0	2	0	14	1600	0	7/29, 9/20, 11/16
Adhikarigoda	0	0	0	0	5	2	0	0	23	0	7/29, 9/20, 11/16
Ukwatta	0	0	0	0	0	0	0	0	0	0	7/29
Bollessegama	79	0	0	0	0	-	109	40	0	-	7/29
Serupita	0	0	0	0	0	0	0	0	278	0	7/29, 11/16
Matugama A.G.A.	0	0	0	5	15	5	11	4	-	-	7/29

Table 13

BACTERIOLOGICAL TEST DATA FOR HAMBANTOTA SITES FOR 1981*

Test Dates / Site Name	7/30	8/6	8/24	9/7	9/16	10/6	10/21	Disin-fection Dates
Ralua	0	0	0	8	0	33	0	8/4, 8/14, 9/12, 10/18
Ethgalmulla	13	0	0	-	0	-	-	8/4, 8/14
Panburawa	1600	0	0	31	0	8	5	8/4, 8/14, 9/12, 11/15
Oluara	0	0	0	23	0	0	-	8/4, 8/14, 9/12, 11/15
Namaneliya	13	0	0	39	0	5	0	8/4, 8/14, 9/22, 10/18
Karametiya	1600	0	0	23	0	0	11	8/4, 9/12

*Reported as Most Probable Number (E. coli confirmed test)

Shock Disinfection

Immediately following pump installation, each well was shock disinfected with locally available 35% bleaching powder. The basic procedure was as follows:

1. The water volume was determined.
2. The amount of chlorine needed to produce a 30 PPM solution was determined from Table 14.
3. The chlorine was dissolved in a bucket and poured into the well.
4. The walls of the well were brushed down with the strong solution.
5. The pump handles were tied down for a period of 24 hours to prevent usage.
6. The wells were then checked to assure a chlorine residual below 3 PPM, and sampled for bacteriological recontamination.

Table 14

AMOUNTS OF CHEMICALS REQUIRED FOR A STRONG CHLORINE SOLUTION CAPABLE OF DISINFECTING WELLS AFTER THEIR CONSTRUCTION

Water (m^3)	Bleaching Powder (25-35%) (g)	Water (M^3)	Bleaching Powder (25-35%) (g)	Water (m^3)	Bleaching Powder (2-35%) (g)
0.1	10	1.5	150	30	3 000
0.12	12	2	200	40	4 000
0.15	15	2.5	250	50	5 000
0.2	20	3	300	60	6 000
0.25	25	4	400	70	7 000
0.3	30	5	500	80	8 000
0.4	40	6	600	100	10 000
0.5	50	7	700	120	12 000
0.6	60	8	800	150	15 000
0.7	70	10	1 000	200	20 000
0.8	80	12	1 200	250	25 000
1	100	15	1 500	300	30 000
1.2	120	20	2 000		

Regional Soil Types

Kalutara

Hilly terrain - red-yellow podzolic soils with soft or hard laterite - good drainage, acidic, depleted of colloids and iron.

Hambantota

Undulating terrain - reddish brown earths and solodized solonetz - poor drainage - hilly terrain - reddish brown earths and immature brown loams - good drainage - sand, silt, clay mix - flat terrain - alluvial soils of variable drainage and texture.

Kandy

Mountainous terrain - red-yellow podzolic soils and mountain regosols - good drainage - azonal soil, low silica, low content of primary minerals.

Amparai

Flat terrain - regosols on recent beach and sand dunes - azonal soil on unconsolidated deposits - flat terrain - solodized solonetz and solonchaks - poor drainage, highly alkaline, intrazonal soil.

Jaffna

Flat terrain - calcic red-yellow latosols - good drainage, clayey, characterized by low silica.

Source: Soil Map of Sri Lanka, 1971, Irrigation Department.

Appendix H

EQUIPMENT, MATERIALS AND SUPPLIES DONATED TO GOVERNMENT OF SRI LANKA

PREVIOUS PAGE BLANK

EQUIPMENT, MATERIALS AND SUPPLIES DONATED TO GOVERNMENT OF SRI LANKA

The following equipment, materials and supplies were donated to MLGHC upon project termination.

Water Quality

1 Millipore Filter Kit
1 Millipore Incubator
1 Hach Direct Reading Environmental Laboratory
2 Chlorine Residual Kits
1 Small Spring Scale
1 Two Liter Boiling Flask and Neck
5 Cylindrical Flasks, 500 ML
2 Squirt Bottles, One Litre
12 1 ml. Pipets
3 5 ml. Pipets
75 Sample Bottles
500 Filter Dishes with Pads
250 Millipore Filters
1 Flash-O-Lens

Chemicals For Bacteria Tests (Millipore)

M-FC Broth - 200 Grams
Sodium Hydroxide - 500 Grams
Potassium Phosphate - 500 Grams

Chemicals for Hach DR-EL I

	Pillows
Amino Acid for Silica	100
Dissolved Oxygen I	100
Dissolved Oxygen II	100
Dissolved Oxygen III	100
Citric Acid	100

Chemicals for Hach DR-EL 1 (continued)

	Pillows
BCG Methyl Red	140
Phenolpthalein	100
Bromophenol Blue	100
Manver (Hardness)	25
Ferrover (Iron)	15
Sodium Periodate for Mn	12
DPD (Chlorine)	100
Diphenyl Carbazone	25
Sulfaver IV	25
Nitriver V	18
Nitriver III	50
Citrite Buffer for Mn	125
H_2S Test Paper	50
Phosver III	100
Cuver I	100
Chromaver III	100
Dithiver for Metals	100
Buffer pH 4	2
Buffer pH 9	6
Hardness Buffer	2
Nessler Reagent	1
Potassium Cyanide	1
Sodium Hydroxide, 5N	1
Magnesium Sulfate Chloroform	1
PAO Sodium Hydroxide, 3.61N	1

Tools and Hardware

2 Screwdrivers

1 Pair Vice Grip Pliers

2 Pipe Wrenches

1 Hacksaw with Spare Blades

Tools and Hardware (continued)

3 Open End Wrenches

1 Adjustable Wrench

1 Hand Pliers

1 Foot Pliers

1 50 Foot Measuring Tape

10 lbs. Grease

90 AID Hand Pumps