PD-ABR-503

BURNS AND ROE ENTERPRISES, INC.

DELIVERY ORDER NO. 9
TECHNOLOGY-BASED SERVICES
KAZAKHSTAN:

- Task 1 - National Energy Savings Plan
- Task 2 - Heat and Power System Efficiency Improvements
- Task 3 - Coal Cleaning Program
- Task 4 - Regional Environmental Improvement Study

FINAL REPORT

September 1994 - January 1997

Submitted by.	Burns and Roe Enterprises, Inc
Submitted to	U S Agency for International Development
Contract No	CCN-Q-00-93-00154-00 Energy Efficiency and Market Reform Project Delivery Order No. 9

DELIVERY ORDER NO 9 FINAL REPORT
KAZAKHSTAN

NATIONAL ENERGY SAVINGS PLAN
HEAT AND POWER SYSTEM EFFICIENCY IMPROVEMENTS
COAL CLEANING PROGRAM
REGIONAL ENVIRONMENTAL IMPROVEMENT STUDY

1 0 CONTRACT ACTIVITY INPUTS, OUTPUTS, AND OBJECTIVES

1 1 Inputs, outputs

Delivery Order No 9 was initiated September 28, 1994 to assist Kazakhstan in the implementation of an expanded energy program The original Delivery Order provided for three tasks toward this objective (1) National Energy Savings Plan, (2) Heat and Power System Efficiency Improvements, and (3) Coal Cleaning Program

Amendment/Modification No 1 was issued August 29, 1995 to extend the estimated completion date from August 31, 1995 to August 31, 1996

Amendment/Modification No 2 was issued September 24, 1995 to incorporate a fourth task into the Delivery Order, (4) Regional Environmental Improvement Study The estimated completion date, for this task only, was identified as July 19, 1996

Amendment/Modification No 3 was issued August 19, 1996 to extend the estimated completion date, for Task 4 only, to January 19, 1997

Delivery Order No 9, Tasks 1, 2, 3, and 4

Labor	$1,957,500
Other Direct Costs	1,061,540
Ceiling Price	$3,019,040

Under the core contract, a budget of $400,000 was allocated toward purchasing equipment related to the four tasks

1 2 Objectives

The Statement of Work for Delivery Order No 9 defines the overall program objective as providing assistance to Kazakhstan *"in the implementation of an expanded energy program with the objective of strengthening export earning capabilities through improved energy productivity and related changes to institutional, regulatory, and economic activities "*

Each task also has specific objectives which are defined within the following summary descriptions

2 0 SUMMARY DESCRIPTIONS OF ACTIVITIES

2 1 Task 1, National Energy Savings Plan

Objective

The goal to be attained from the work is to assist the Republic of Kazakhstan's Ministry of Economy in preparing a National Program for Energy Savings (NPES) The specific objectives to achieve this goal are

* *the performance of specified tasks directed toward identifying economic and legislative measures to considered for incorporation in the National Energy Savings Plan, and*

* *the performance of specified tasks directed toward technical and operational measures to be considered for incorporation in the National Energy Savings Plan*

The approach to meeting task objectives was carried out with the following plan

- Address energy sources, generation, transmission, distribution, and consumption of both electrical energy and centrally produced thermal energy
- Analyze current and future energy demand by sector, and estimate potential energy savings and recommendations for energy savings policies
- Make recommendations on economic, legislative, and technical initiatives

2 2 Task 2, Heat and Power System Efficiency Improvements

Objectives

To assess the benefits and costs to be gained by renovation, life extension and coal quality improvement (where applicable) to the Thermal/Heating plants at

** Almaty DHPP-2*	*510MW*	*coal fired*
** Atyrau DHPP*	*277MW*	*gas, mazut*
** Ermakovskaya SDPP*	*2400MW*	*coal*
** Pavlodar DHPP-1*	*350MW*	*coal*

To estimate, on the basis of the study results, the benefits and costs for renovating all comparable Kazakhstan Thermal/Heat plant systems and prepare a plan which can be used by domestic and foreign investors to evaluate investment opportunities

*(Plants tentatively identified as study models, in original statement of work)

The work included two elements essential to the task goals

- Assess technical and cost benefits to be gained by renovation, life extension, and efficiency improvements for four thermal plants Pavlodar, Ekibastuz, Karaganda, and Ust-Kamenogorsk
- Investigate whether the present level of plant instrumentation supports the operating and controls philosophy of the thermal system

2 3 Task 3, Coal Cleaning Program

Objective

To determine optimum, state-of-art coal cleaning and mining processes which are applicable to Kazakh coals, considering ultimate coal quality environmental quality safety and favorable economics

This objective was implemented under the following plan

- Determine optimum coal cleaning and mining processes applicable to Kazakstani coals from Karaganda and Ekibastuz basins, considering coal quality, environment, safety, and economics
- Testing and cleaning of representative coal samples by U S laboratory, results to Ministry of Energy and Coal to select an optimum coal cleaning process
- Conduct training on coal cleaning technology, develop investment program for coal cleaning plant

2 4 Task 4, Regional Environmental Improvement Study

Objectives

Train and equip a selected team of local personnel (1) to perform environmental audits to identify the most critical pollution problems and (2) to perform all technical and cost

analyses necessary to select, design, and implement technologies and practices to control emissions and to remediate environmental damage,

Characterize the gaseous, liquid, and solid emissions from energy installations and heavy industry facilities in a selected region of Kazakhstan, and thereby identify the pollution control technologies that are the highest priority for transfer and adaptation to the technical and economic conditions prevailing in Kazakhstan including existing and future environmental standards and regulations,

Plan and execute a prototype project to monitor pollution at a selected energy facility and to prepare an implementation plan for effectively reducing emissions through the transfer, adaptation, and use of a modern, commercially available pollution control technology, and

Facilitate the extension of the results through out the country and provide inputs for the national government to consider when modifying existing or adopting new regulations for environmental protection

The following steps were identified as necessary components to meet task objectives

- Train and equip local personnel to perform environmental audits and implement technologies to control emissions and remediate environmental damage
- Characterize gaseous, liquid, and solid emissions from energy installations in a region of Kazakhstan, and identify highest priority technologies for transfer and adaptation to prevailing technical and economic conditions
- Monitor pollution at a prototype facility and prepare implementation plan for reducing emissions
- Conduct a national seminar to publicize results and provide inputs for consideration of the national government regarding regulations for environmental protection

3 0 STATISTICAL SUMMARIES AND ANALYSES OF ACTIVITIES

3 1 Task 1, National Energy Savings Plan

The Council of Ministers of the Republic of Kazakhstan decided in 1994 to establish a National Program for Energy Savings, to cover each sector of the economy The responsibility to prepare recommendations for the development of a National Program for Energy Savings was given jointly to the Ministry of Energy and Coal and the Ministry of Economy At the request of the Government of Kazakhstan, USAID agreed to assist in the development of such a program by providing technical assistance in specific areas which were jointly selected

In July 1995, Burns and Roe issued the Final Report for this task, which was prepared in collaboration with International Resources Group and Foster Wheeler The report, entitled *Kazakhstan National Program for Energy Savings*, fulfilled the task objectives in

comprehensive manner with detailed research, discussion, and recommendations concerning energy savings topics

a Importance of and potential for energy savings
b Energy pricing principles and guidelines
c Energy demand, energy pricing and energy savings
d Government policies and programs
e Funding options
f Facility-level energy management
g Power sector
h District heating sector
i Fertilizer industry
j Nonferrous metals industry

Key recommendations for energy savings were identified in the Final Report

1 Accelerate economic reform
2 Increase end-user energy prices according to the principles outlined in the study
3 Put in place incentives for the installation of equipment that measures energy consumption
4 Establish the Energy Conservation Department within the Ministry of Economy as the coordinator of the Government's energy savings policies and establish an independent Energy Conservation Agency to implement the programs associated with these policies, involve a diversity of organizations, especially the private sector, in the pursuit of energy efficiency
5 Assess various financing options, focusing in the short term on demonstration zones, energy savings fund and multilateral bank funded projects
6 Focus initially on energy savings in the industrial sector, and on those energy savings investments whose costs are recoverable in less than one year once the investments are operational Ensure that industrial facilities scheduled for energy conservation investments can survive in their market sector and are economically viable in the long term
7 Focus initially on policies and programs achievable in a timely and effective manner during the next three years as the country progresses to a market-based economy, an then consider policies and programs that will yield energy savings in the longer term

3 2 Task 2, Heat and Power System Efficiency Improvements

In January 1995, Burns and Roe started a study in Kazakstan to determine heat and power plant efficiency improvements Four plants were selected for the study by Kazakstan's Ministry of Energy and Coal, and Kazakstanenergo, namely

Ermakovskaya in Pavlodar, block 3
Ekibastuz #1, block 3
Karaganda #2, block 3
Ust-Kamenogorsk, block 7

The work included the following tasks

- Background data related to the project was collected and analyzed Meetings were held with Kazakstani engineers to discuss the collected data
- A condition assessment was performed to determine thermal efficiencies of the systems and identify the major plant systems and components which require rehabilitation or modernization
- An engineering analysis was performed to establish recommendations for improvements This analysis also included development of capital cost estimates and implementation schedules
- A detailed rehabilitation and modernization program was outlined and recommendations made for life extension and improving system efficiencies and reliabilities
- The results of the engineering analyses were reviewed with Kazakstani authorities, with the expectation that the results of the analysis could be extended to other fossil plants in the country

Final reports prepared for each plant, entitled *Heat and Power System Efficiency Improvements*, provide detailed information and discussion including the following topics

Kazakstan energy sector strategy
Plant description and evaluation
Rehabilitation recommendations
Capital cost estimates
Construction schedule

In January, 1996, Burns and Roe issued the Final Reports, in two volumes for the four plants, in both English and Russian languages

3 3 Task 3, Coal Cleaning Program

The basis for this task was that large coal resources exist in northeast Kazakstan, and coal represents the major fuel of heat and electricity generation at present and in the foreseeable future The coals mined at Karaganda and Ekibastuz, the two main coal mining areas of Kazakstan, currently contain up to 50-55% ash, whereas most boilers in Kazakstan are designed to fire a coal with an ash content no greater than 36-38% at full nameplate capacity The results of handling and firing the dirtier coals are large increases in handling and transportation costs, derating of the boiler capacity, and increases in plant waste volumes

The project was funded to develop a preliminary flowscheme for a proposed preparation plant to reduce the ash and sulfur content of high-ash run-of-mine coal from one selected area of Kazakstan The first step in the project was to conduct a field trip to the two main coal mining areas of Kazakstan -- Ekibastuz and Karaganda -- and identify any short term cost-effective improvements in coal mining and handling processes prior to taking samples for further characterization No improvements in the short term were identified Therefore, samples were taken from the two main coal mining areas under present mining conditions The resulting washability (coal cleaning potential) of the coals was the basis for choosing the Karaganda coal as the proposed raw coal feed to the proposed preparation plant It was established, though, that the developed flowschemes would apply equally well to either of the coals with a slight reduction in weight recovery because of the lower cleaning potential of the Ekibastuz sampled coal

The necessary washabilities (and associated analyses of the two subject coal samples were performed in the United States at a laboratory in the Pittsburgh, Pennsylvania area Four technical visitors from Kazakstan -- representing the Ministry, coal mining/preparation, and coal analysis/research -- participated in the testing of the coals during September, 1995 In addition, visits were made to research laboratories, preparation plants and a small-scale production facility for a coal-water mixture material burned in a power plant

Coal laboratory equipment was identified for installation at a site in Kazakstan to be selected by the Ministry Basically the equipment ranged from screens, the float-sink tanks and associated tools, and a centrifuge which requires the development of technique by usage These basic skills are a standard part of the experience of analysts in Kazakstan and should represent no major obstacle for the implementation of the equipment

Five flowschemes of varying complexity of equipment requirements were developed with an associated wide range in capital and operating cost The treatment of high-ash raw coal feeds in the 45-55% ash range for reduction the 36-38% ash range was considered significant and completely viable, at a range of weight percent recovery of clean coal product from 63 8% to 71 5% for the five tentative flowschemes These five based on a total capital cost to build ranged from $11 62M to $18 87M -- and a capital cost per clean coal product from $1 04 to $1 48 The operating cost per clean coal produced ranged rom $3 09 to $5 11

The four visitors were given a three-day seminar covering general economics for coal preparation, and the background and development of the candidate flowschemes The flowscheme chosen by the visitors was the two circuit heavy media wash (including a heavy media wash and a heavy media cyclone) treating 150mm by 0 75mm raw coal feed

The chosen flowscheme was developed further to include all preliminary information necessary for a hypothetical investment program to a lending institution This included drawings covering the process equipment and the quantity-quality of all flowstreams, tables listing the major pieces of equipment required for raw coal handling, the preparation plant, and refuse and clean coal handling, and documentation including appropriate technical, environmental, and economic and financial assessments

The developed flowscheme is capable of processing both Borlinski and either of the Ekibastuz raw coal feeds A sleight decrease in yield of clean coal for the Ekibastuz coals would be obtained because of the difference in washability characteristics of the raw coal feeds in comparison to the Borlinski raw coal feed

The advantages in reducing Kazakstan run-of-mine raw coal ash from 45-55% to 36% by processing in the proposed preparation plant are reduced costs in coal transportation, storage and handling, pulverization, steam generation, precipitator/baghouse operation, flue gas desulfurization, and fly-ash and scrubber waste disposal Another advantage is greater overall thermal efficiency of the power station An important cumulative environmental advantage is that decreased amounts of pollutants are discharged from the power plant

Burns and Roe issued the Final Report for the task, entitled *Coal Cleaning Plant Design Study*, in December, 1995, in both English and Russian languages

Burns and Roe identified analytical and laboratory equipment needed for the Kazakstan State Scientific Research Institute, Karaganda, purchased, and shipped this equipment to the institute

3 4 Task 4, Regional Environmental Improvement Study

Burns and Roe selected a counterpart team of seven environmental specialists and trained them to perform environmental audits, identify critical pollution problems, and perform technical and cost analyses to select, design, and implement technologies and practices for controlling emissions and remediating environmental damage Refer to Attachment A *Modern Emission Control Technologies and Methods Highlights of Technology Training Program*

The team conducted environmental surveys at four selected facilities in Kazakstan in order to characterize gaseous, liquid, and solid effluents, and methods of control and disposition of wastes The facilities surveyed were Djambul Power Station, Ekibastuz Power Station No 2, Ermakovskaya Power Station, and Ust-Kamenogorsk As a result of these surveyed, pollution control technologies were selected, and cost analyses were performed, with the intent of adapting such technologies to the facilities, taking into account the local technical and economic conditions Refer to Attachments B1, B2, B3, and B4 *Regional Plant Surveys*

The team then conducted an Emission Monitoring Program at the Ekibastuz Power Station No 2 Following the monitoring program, the team prepared a facility modification plan which, when implemented, would reduce emissions at this facility Refer to Attachment C *Prototype Facility Testing Program* Costs for implementation of the plan were established to provide a basis for estimating pollution control costs for other facilities The counterpart team members also travelled to the U S to observe and study environmental technologies similar to those proposed for the prototype facility

A National Seminar was planned to show how the results of the task could be extended to other plants throughout Kazakstan Unfortunately however, the results could not be obtained within the planned schedule because neither of the boilers was in operation at the time Burns and Roe requested that the Delivery Order completion date be extended until the units would operate, to allow for collection of the data necessary for the report, so it could be presented at a National Seminar Since the completion date was not extended, no data could be collected, and therefore, the National Seminar was not conducted

KAZAKSTAN

REGIONAL ENVIRONMENTAL IMPROVEMENT STUDY

MODERN EMISSION CONTROL TECHNOLOGIES AND METHODS

HIGHLIGHTS OF TECHNOLOGY TRAINING PROGRAM

USAID DELIVERY ORDER NO 9 TASK NO 4

BURNS AND ROE COMPANY

10

INTRODUCTION

The energy sector in Kazakstan has been identified as a significant source of emissions USAID, in cooperation with Utility and Ministry authorities in Kazakstan, has agreed that a need exists to encourage the wide-spread adoption of modern, commercially available pollution control technologies and practices in the operation of energy and power installations to enable such facilities to comply with internationally accepted emission standards

To support this objective, Burns and Roe has proposed a plan for a Regional Environmental Improvement Study as related to thermal power production facilities in Kazakstan A major objective of this program was to train and equip a selected team of local experts to perform the technical and cost analyses necessary to select, design and implement technologies and practices to control emissions from thermal power plants

As a first step, Burns and Roe organized and conducted a technology transfer program during which the selected Team Members were introduced to modern, commercially available emission control technologies presently in use at Western thermal power facilities These technologies were presented to the team in a series of classroom lectures, with each team member receiving a technical manual describing each specific technology, its application, effectiveness and relative cost Wherever possible, these manuals included recent technical publications and suppliers technical literature

The classroom lectures and training manuals utilized hundreds of pages of technical information Burns and Roe has prepared a summary of this material so that the Team Members, and others interested in the results of this program, would have ready access to the highlights of the training material in a single document The highlights of the technology training program are presented in this report

SECTION 1 - PARTICULATE EMISSION CONTROL

1 1 Background

1 1 1 Effect of Particulates

The largest stationary sources of particulate matter in the atmosphere include fossil fuel-based thermal power plants, metallurgical processes and cement manufacturing Particulates emitted by fossil fuel-fired power plants (coal and mazut) contain both "coarse" particles, less than 2 5 microns in diameter, and "fine" particles, less than 2 5 microns in size These particles may contain metals, sulfates, and heavy metals (lead, mercury, arsenic) which have been found to be toxic

Inhalation of these particles has been found to have an adverse effect on human health The deposition of particulates in the human respiratory system depends on the particle size and shape while the effect is also influenced by the chemical composition, the duration of exposure and the susceptibility of the specific individual Fine particles have been found to have a greater effect because they are more easily retained in the lungs Plants exposed to wet and dry deposition of particulates may also be injured by both physical coating or chemical poisoning resulting in a reduction in plant growth and yield

Particulate emissions generally have their greatest impact in the area of the emission source where the toxic elements are more likely to harm plants, animals and humans Fine particulates in the atmosphere may cause reduced visibility in addition to their impact on ecosystems

1 1 2 Regulation of Particulates in the Atmosphere

Ambient air quality standards are generally established to limit the allowable concentration of particulates Particulate concentration limits may include values for both short term exposure (24 hours) and long term exposure (annual average) and may distinguish between concentration limits for fine and total particulate matter Air quality standards may also limit the concentration of specific toxic particulate compounds or elements, but these limits seldom impact the design and operation of a fossil fired power station

The World Health Organization (WHO) the US EPA as well as other organization have developed reference standards for particulate concentrations which may serve as guidelines to countries preparing or revising their ambient air quality standards When evaluating the impact of a new or operating source on the air quality it should be remembered that there are many potential source of particulates contributing to the measured concentration, especially in urban areas, and the impact of the power station may be relatively small when compared with these other sources

1 1 3 Emission Limits

Since emissions of particulate matter from fossil fired power stations are relatively easy to control utilizing modern emission control technology, particulate emissions standards proposed by international financial institutions have been set quite low Proposed World Bank standards for a coal-fired plant or unit include the following requirements

- Emission limits - 50 mg/Nm^3
- Minimum ash removal efficiency - > 99 %
- Removal efficiency for small particles (less than 10 micron) > 98 %

These emission limits are in line with that in use in many Western countries including the United States (37 mg/Nm^3) Proposed emission limits for Kazakstan range from 50 to 150 mg/Nm^3, depending on the thermal capacity of the boiler and the fuel ash content Kazakstan proposed emission limits for mazut fired boilers is 50 mg/Nm^3

Since these emission limits are quite stringent, the emission limit, in contrast to the ambient air quality limit, will usually determine the allowable plant particulate emission limit In cases where even this strict emission limit results in unacceptable air quality, consideration should be given to selection of an alternate plant site or to the use of cleaner fuel (natural gas) Further improvements in particulate control technology, resulting in a significant reduction in particulate emissions are not anticipated in the foreseeable future

1 2 Overview of Particulate Control Technologies

A number of potential particulate control alternatives are available for both coal and mazut fired boilers These include both "dry" technologies such as

- Cyclones (and Multiclones)
- Electrostatic Precipitators
- Fabric Filters (Baghouses)

and "wet" technologies such as Wet Scrubbers (including venturi scrubbers) Advantages and disadvantages of these technologies, their effectiveness and relative costs information are described later in this document When considering selection of the most effective emission control technology it should be remembered that a significant fraction of fly ash produced from a pulverized coal boiler is less than 10 micron in size (Exhibit 1 2-1)

While wet scrubbing systems were utilized in the past for particulate control, their very high pressure drop, large fresh water demand, associated corrosion problems and ash/waste water disposal concerns have essentially eliminated them from consideration when constructing a new coal fired boiler Since cyclones lack the capability to recover fine particulate material from the flue gases, they are also no longer considered for pulverized coal applications In fact, Western technology utilizes either electrostatic precipitators or fabric filters almost exclusively for the removal of fly ash from coal fired power plant flue gas Cyclones or Multiclones have been applied to mazut fired boilers however and may be considered where reduction in particulate emissions from such stations are required

1 3 Electrostatic Precipitators

The basic principles of electrostatic precipitation is described below

- Ash particles are (negatively) charged by electric current
  - Current is applied by electrically charged wires or rods
  - Stronger electric current (higher voltage) increases collection efficiency so maximum voltage is desirable

- Particles migrate, or drift, toward the grounded collection plate due to the effect of the strong electrical current

- Migration velocity is function of particle diameter Large particles migrate at greater velocity and are therefore collected more easily
- Fly ash chemical properties also impact the particle collection efficiency
- Particles are dislodged from the collection plate and fall to the bottom of the electrostatic precipitator where they are collected for disposal

These principles are described in more detail in Exhibit 1 3-1

Both mechanical design features and fly ash characteristics have a major effect on the collection efficiency of an electrostatic precipitator

- Ash concentration (mg/Nm3) has a significant impact High inlet dust loading makes it difficult to achieve high voltage on the initial electrical fields of the ESP

- Chemical composition and ash resistivity also have a major effect Resistivity is resistance (ohm-cm) of a cube of fly ash one cm on each side
  - Temperature has a major effect on resistivity Resistivity is usually maximum between 140° C and 200° C
  - Optimum resistivity is 10^9 to 10^{10} ohm-cm Normal fly ash resistivity is 10^{11} to 10^{12} ohm-cm or, in some cases even higher (10^{13} ohm-cm)

- Absorbed acid (SO_3) and water on the ash surface reduce resistivity and improve collection efficiency Low sulfur coals do not benefit from this improvement
  - High resistivity ash limits useful power consumption, reducing the migration velocity
  - Low resistivity (high conductivity) ash limits the ability of the ash particle to hold a charge and collect on the collection plates This is not usually a problem with fly ash

Key design variables of the ESP are summarized below

- Gas volume and flow path area Flue gas velocity through the ESP Normal design velocity is 1 to 1 5 m/s

- Collecting electrode area. Specific collection area is total area of all collection plates (both sides) per unit quantity of flue gas volume flow (M^2/M^3/sec (A/V) The area can be increased as required to reach the necessary efficiency

- Aspect ratio Length of collecting plate – Plate height Normal design value for high efficiency is at least 1 5 ratio

- Number of electrical fields (sections) is also important Number of independent sections allows optimum voltage for each section Maximum voltage means maximum efficiency Also increases reliability

General terminology applied to the ESP is shown in Exhibit 1 3-2 while Exhibit 1 3-3 identifies some of the basic terms applied to the mechanical design of the ESP

Highlights of the mechanical design features incorporated in a modern Western design ESP are illustrated in the Exhibit 1 3-4 provided by the General Electric Company These features include

- Rigidly mounted twisted bar **Discharge Electrodes** supported in a tubular mast assembly This provides uniform corona discharge with high voltage-low current characteristics along with high reliability

- **Rigid-Frame Collecting Plate**, up to 14 6 meters in height, provide the surface for collection of the charged ash particles Plate spacing is normally 305 mm or 405 mm (center to center) This integrated panel design is produced in plate lengths from 1 8 meters to 2 7 meters The "roll formed profile" provides a quiescent flow zone directly opposite the discharge electrodes to improve efficiency

- External ash removal **Rapping System** utilizes roof mounted individually controlled, highly sectionalized electromagnetic impact rappers which features on-line intensity and rapping frequency controls for optimum performance

- Casing design featuring **Sneakby Baffles** in the roof, the ash hoppers and at the sides to prevent ash containing flue gas from bypassing the electrical fields Bypassing can have a significant impact on the ability to achieve dust collection efficiencies in the range of 99 9 %

- **Multiple Fields** in the direction of gas flow will improve the performance of the ESP by allowing application of optimum voltage to each field A high efficiency ESP may have some 6 to 8 independent electrical fields in each cell In addition, increasing the number of fields reduces the effect on collection efficiency caused by an electrical failure to a single field

A typical Western design, for a high efficiency ESP has also been provided by the General Electric Company for a 500 MWe monoblock boiler firing low sulfur, high ash coal The design and performance characteristics are presented in Exhibit 1 3-5 Each of the eight field ESP's is powered by 16 independent transformer-rectifier sets Also of interest are the overall dimensions of each 48,800 m^2 precipitators Each contains about 30 % greater plate area than the Type ЭГ3 -4-265 -04 ESP's presently installed on similar size boilers in Kazakstan, while occupying almost the same plot area

1 4 Flue Gas conditioning

Flue gas conditioning can reduce collection plate size significantly by reducing the resistivity of the fly ash Flue gas conditioning, utilizes the addition of a small amount of SO_3 (less than 10 ppm) which deposits on the surface of the ash as sulfuric acid This technology has been widely applied in Western countries and is especially effective when low ash collection efficiency is the result of firing low sulfur coal (high resistivity ash) Application of this technology requires a source of elemental sulfur, either in molten or granular solid form to be utilized for the production of the required SO_3 The cost and availability of sulfur is important to consider when this technology is under investigation

The technology is described in detail by one of the suppliers of the conditioning systems, Wahlco (Exhibit 1 4-1) It is often applied in cases where the sulfur content of the fuel fired has been reduced to meet sulfur dioxide emission limits and ESP performance has been adversely impacted It is estimated that flue gas conditioning can reduce the collection plate area required to achieve a specific efficiency by as much as 30 to 40 %

1 5 Fabric Filters

Highlights of fabric filter technology are presented in Exhibit 1 5-1 As described in the Introduction fabric filters represent the most versatile technology for the removal of solid particulate matter from a gas stream No particle is too large and few are too small for efficient collection and the technology is most effective when cleaning particulate matter with a wide range in particle size distribution Selection of the fiber material and construction type (woven or felt) is of great importance in the application of this technology since the dust is to be removed from a hot potentially corrosive flue gas stream A listing of modern fibers and their properties is presented in Exhibit 1 5-2

Removal of particulates from air by fabric filtration is a well established technology which has been applied to boiler flue gas for the past 15 - 20 years The filtration process is described in Exhibit 1 5-3

Fabric filtration methods are categorized by the type of bag cleaning which, in turn is determined by the flow of flue gas through the fabric bag When "dirty", flue gas containing ash flows into the bag and the dust is collected on the inside surface of the bag the method is referred to as Reverse Gas filtration Bag cleaning is accomplished by directing a "reverse flow" of clean flue gas to the outside of the bag, causing the bag to partially collapse and the collected dust to fall into the hopper below a necessary feature of such a system is the requirement that the flow of dirty flue gas be discontinued during the reverse gas cleaning Key features of this system are described in Exhibit 1 5-4

An alternative bag arrangement features the collection of dust on the outside of the filter bag with the flue gas flowing from the outside to the inside This design requires the bags to be supported on wire cages to prevent collapse during normal filtration Cleaning of the bags may be accomplished by applying a short "pulse" of air to the inside of the bag, causing the bag to expand slightly away from the surface of the wire cage and the dust to be shed from the outside surface Since this pulse is applied for less than one second, and the air is at a higher pressure than the flowing flue gas, it is not necessary to discontinue the flow of dirty flue gas during the cleaning operation Key features of this Pulse Jet system are described in Exhibit 1 5-5

Filter design and sizing issues are discussed in Exhibit 1 5-6 Reverse gas fabric filters typically are sized to provide a flue gas to fabric surface ratio of 0 01 cubic meters/second per square meter of cloth (0 01 meters/sec velocity through the cloth) Since cleaning is carried out without flue gas flow in the compartment being cleaned, this ratio is applied to the"net" surface area available for cleaning, not the total, or "gross" surface area In the past, reverse gas filtration was the technology of choice for new power plants applying fabric filter ash collection

Pulse jet fabric filters operate at higher velocities (0 02 meters/sec) and so require less cloth area Since they are cleaned while in operation, no adjustment in area is required to account for the bags being cleaned This results in a considerable reduction in filter size (plot area) and cost and the pulse jet design has recently become the technology of choice for utility applications, especially in retrofit situations

Each filter bag in a pulse jet installation would be 6 to 7 meters in length with a diameter of about 110 mm, providing a surface area of about 2 2 square meters A 500 MWe boiler, discharging over 3 million cubic meters per hour of flue gas, would require some 44,000 square meters of filter surface area or about 20,000 individual filter bags These filter bags would be arranged in individual

compartments within a number of fabric filter casings The estimated plot area requirements for such a design would be significantlv less than that of a high efficiency electrostatic precipitator (less than 1,200 square meters) with significant flexibility in the arrangement of the compartments Dust collection efficiency would of course exceed that which could be achieved with any electrostatic precipitator

The relatively small plot area requirements and the flexibility in arranging the fabric filter compartments has led to the consideration of the retrofit of fabric filtration system into the existing casing of a low efficiency electrostatic precipitator and several such retrofits have been successfully demonstrated Exhibit 1 5-7 describes the such a retrofit to the 350 MWe Munmorah station in Australia where fabric filter bags replaced the internals of the existing electrostatic precipitator which had a collection plate area of less than 80 square meters/cubic meter per second flue gas flow While such a retrofit should be seriously considered where electrostatic precipitator efficiency is unsatisfactory, its application requires that the existing precipitator casings be in good physical condition and that the system is capable of operating with the increase in flue gas side pressure drop (150 mm water) required to operate a fabric filter system

1 6 Combined Technologies (ESP plus Fabric Filter)

Increasing pressure to reduce particulate emissions from existing coal fired boilers equipped with electrostatic precipitators has resulted in the development of a new approach combining the functioning electrostatic precipitators with a retrofit fabric filter system This technology, **CO**mpact **H**ybrid **PA**rticulate **C**ollector (**COHPAC**) involves the installation of a Compact Pulse Jet Fabric Filter downstream of the operating ESP to act as a particulate "polishing" or performance enhancing device Where the existing ESP removes a significant portion of the fly ash from the flue gas, and only a relatively small amount remains to be removed, the pulse jet fabric filter bags can be sized for significantly higher flue gas velocity than where a full dust cake is to be collected on the fabric surface

The COHPAC concept has been demonstrated on a full size 574 MWe lignite boiler in the US and a description of the application is provided in Exhibit 1 6-1 The reduced ash loading allows the flue gas velocity through the fabric to be increased from the typical value of 0 02 meters/sec to as high as 0 06 meters/sec , reducing the number of filter bags required by a factor of 3 Economic evaluations have suggested that this approach is more cost effective than either adding an additional electrostatic precipitator, is series with the existing one, or replacing the ESP entirely with a new pulse jet fabric filter As in other applications where fabric filter technology is considered, the higher gas side pressure increase may require replacement of the existing boiler ID fans

For the cases under consideration in Kazakstan, where outlet ash concentrations from the existing dust collection equipment exceed 2,000 mg/Nm^3, or where the flue gas contains moisture from the wet dust collection system, it is unlikely that the COHPAC technology could be successfully applied

1 7 Comparison of Alternative Technologies

The World Bank has completed a preliminary investigation of alternative particulate control technologies and has concluded that dry dust collection technologies, utilizing either electrostatic precipitators or fabric filters, are preferred (Exhibit 1 7-1) Both technolgies can achieve the low emission level required to meet strict emission standards Investment and levelized operating cost comparisons (Exhibit 1 7-2) suggest that to achieve high ash removal efficiencies when firing low

sulfur fuels, the fabric filter technology may be the most cost effective Since economic evaluations are highly site specific care should be taken in applying these conclusions the installations in Kazakstan however

SECTION 1 EXHIBITS

Exhibit 1 2-1

Exhibit 1 3-1

Exhibit 1 3-2

Exhibit 1 3-3

Exhibit 1 3-4

Exhibit 1 3-5

Exhibit 1 4-1

Exhibit 1 5-1

Exhibit 1 5-2

Exhibit 1 5-3

Exhibit 1 5-4

Exhibit 1 5-5

Exhibit 1 5-6

Exhibit 1 5-7

Exhibit 1 6-1

Exhibit 1 7-1

Exhibit 1 7-2

Exhibit 1 2-1

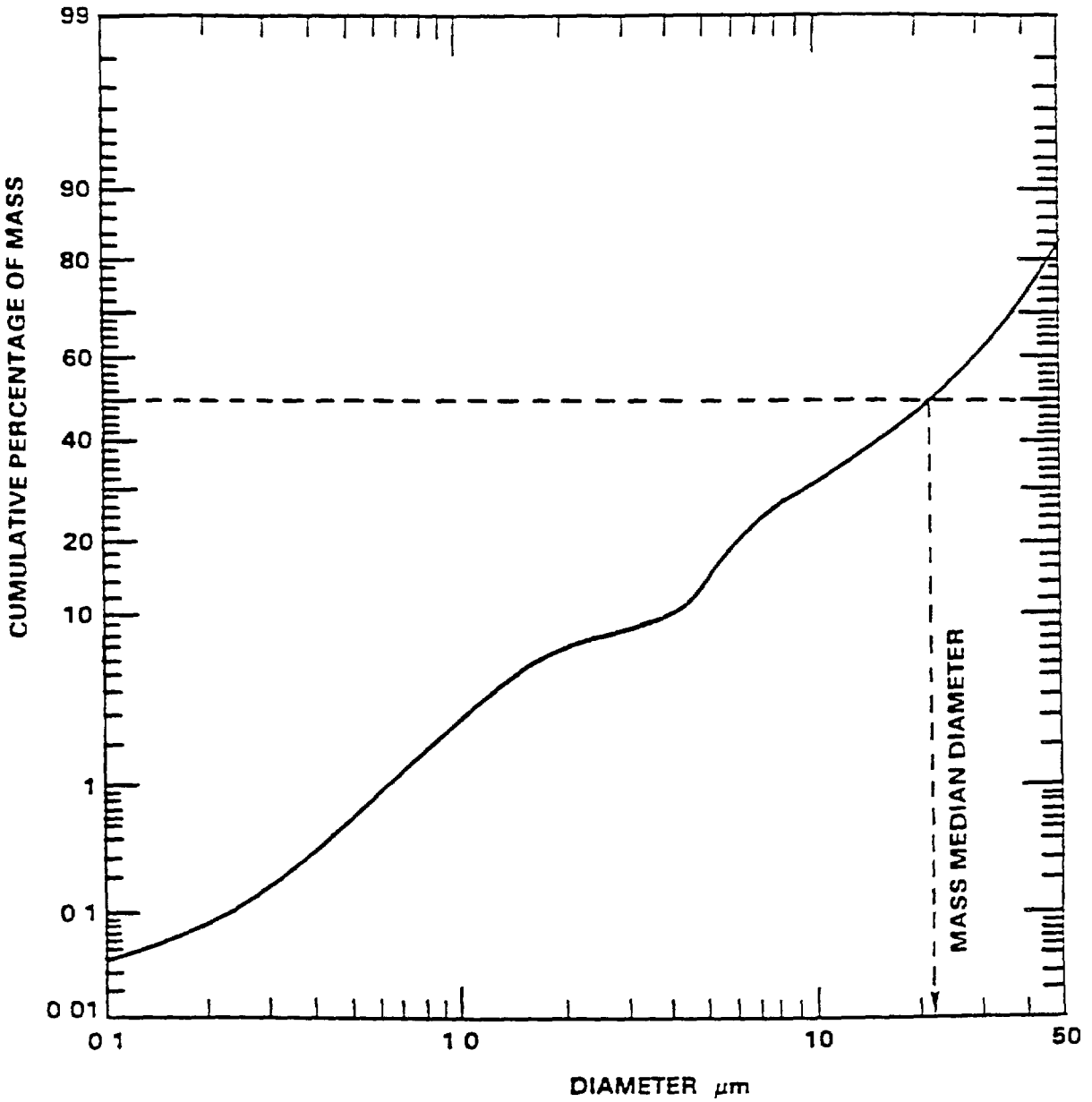

Typical cumulative mass versus size distribution of fly ash particles generated by combustion o pulverized coal

Exhibit 1 3-1

II. PRINCIPLES OF OPERATION

The basic principle of electrostatic precipitator operation is the same regardless of application There are three separate and distinct phases which are fundamental to electrostatic precipitation

1) The negative electrical charging of the aerosol particle by the emitting electrode
2) The migration or drift of the charged particle to the grounded collecting electrode because of the influence of an electrical field
3) The removal of the accumulated particulate from the collecting plate to the hopper by periodic mechanical impact

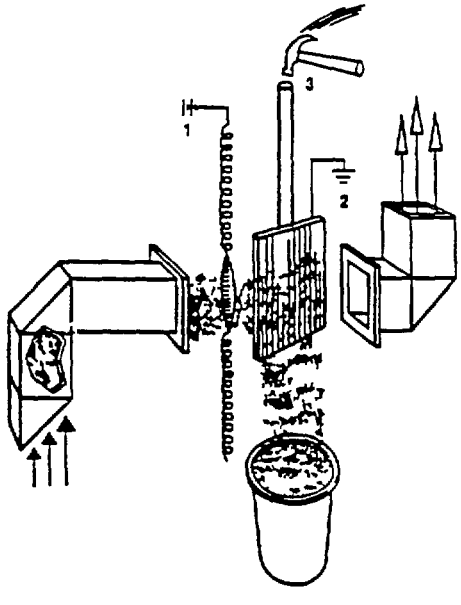

The precipitator itself can be described as a large box containing rows of parallel collecting electrodes (plates) between which passes the dirty gas Centered between each row of collecting electrodes are emitting electrodes (wires) which are charged negatively with unidirectional electric power from a transformer rectifier and a high voltage control system

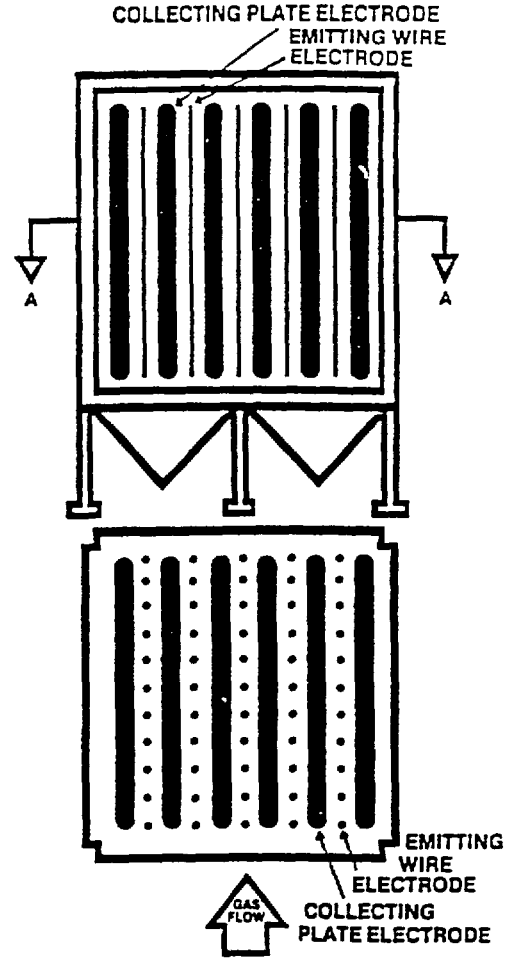

Precipitator Schematic Front Elevation

Precipitator Schematic Section A A

The voltage applied to the emitting wires is in the range of 30 000 volts to 70 000 volts with currents ranging from 200 to 3000 milliamperes per field The collecting plates are electrically grounded The high voltage negative DC generates a corona field at each wire which induces a flow of negative ions from the wires to the collecting plates As dust particles pass between the rows of plates they collide with gaseous ions which adhere giving them a negative charge The charged dust particles are then attracted to a collecting plate where they accumulate to form a layer Periodically the collecting plate is rapped by timed impactors and the layer of accumulated dust slides downward until it falls into the hopper

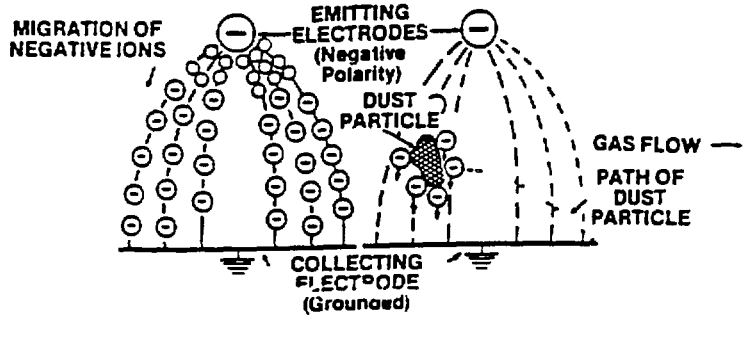

Electrostatic Precipitation

Exhibit 1 3-2

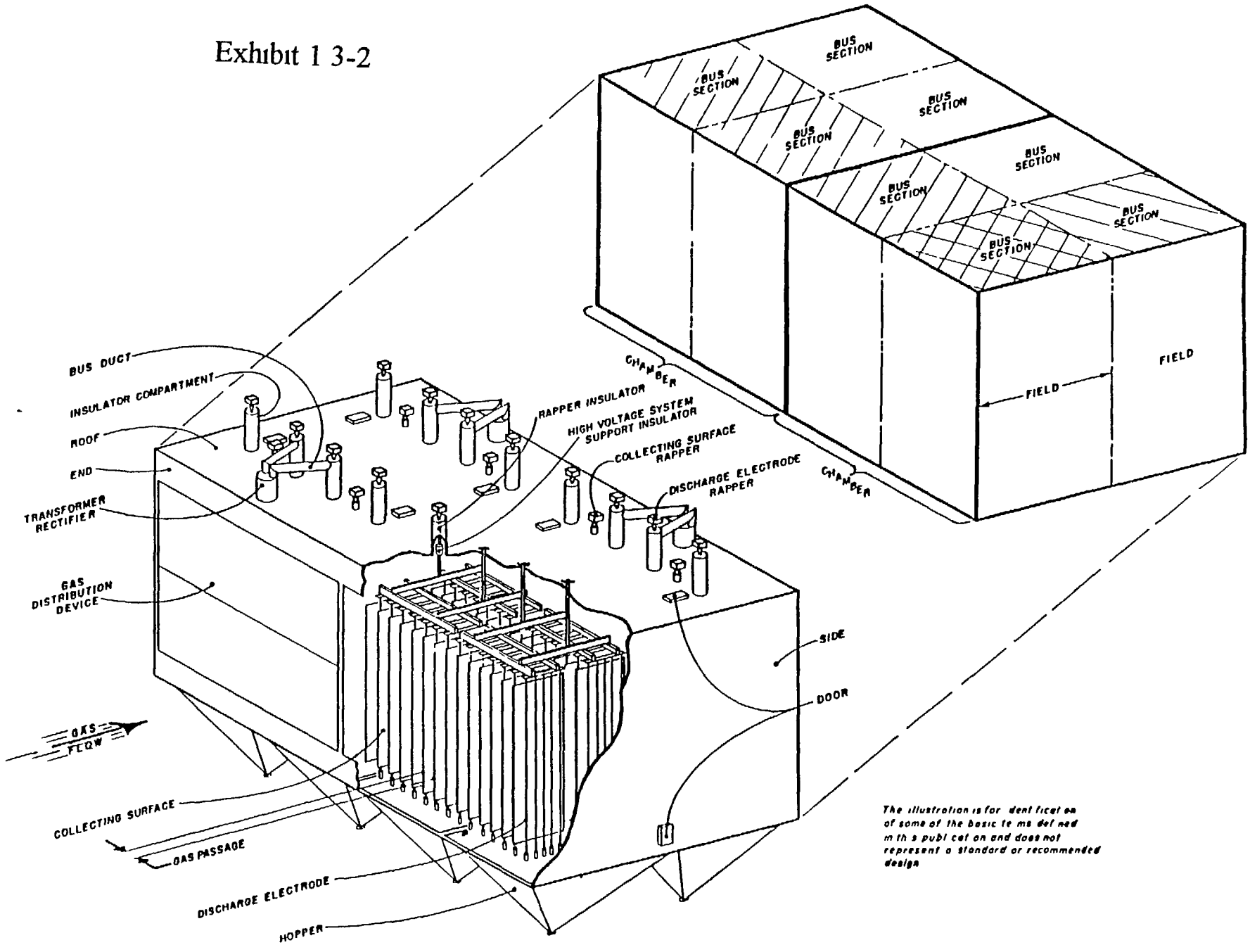

The illustration is for identification of some of the basic terms defined in this publication and does not represent a standard or recommended design

Since the electrostatic precipitator applies the force for separation directly on the particulate its operation requires less energy than other methods of separation

The following terms pertain to the four dimensions generally used when describing the effective treatment area of a precipitator

Effective Treatment Area

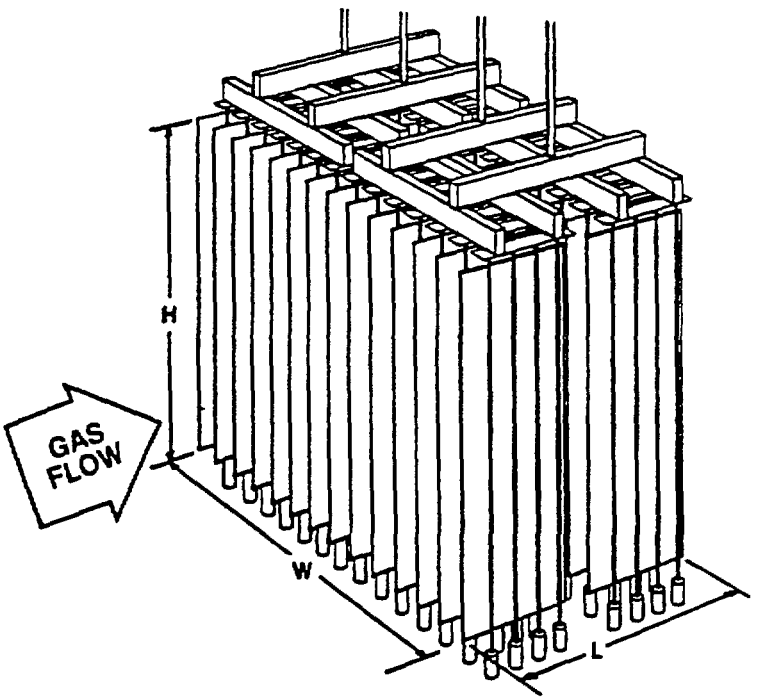

- **Effective length** - Total length of collecting surface measured in the direction of gas flow
- **Effective height** Total height of collecting surface measured from top to bottom
- **Effective width** Total number of gas passages multipled by the center to-center spacing of the collecting surfaces
- **Effective cross sectional area** Effective width times effective height

Specific collecting area - (SCA) is the plate treatment area per 1000 cubic feet of gas and is a factor used in sizing precipitators

Exhibit 1 3-4

GE Design

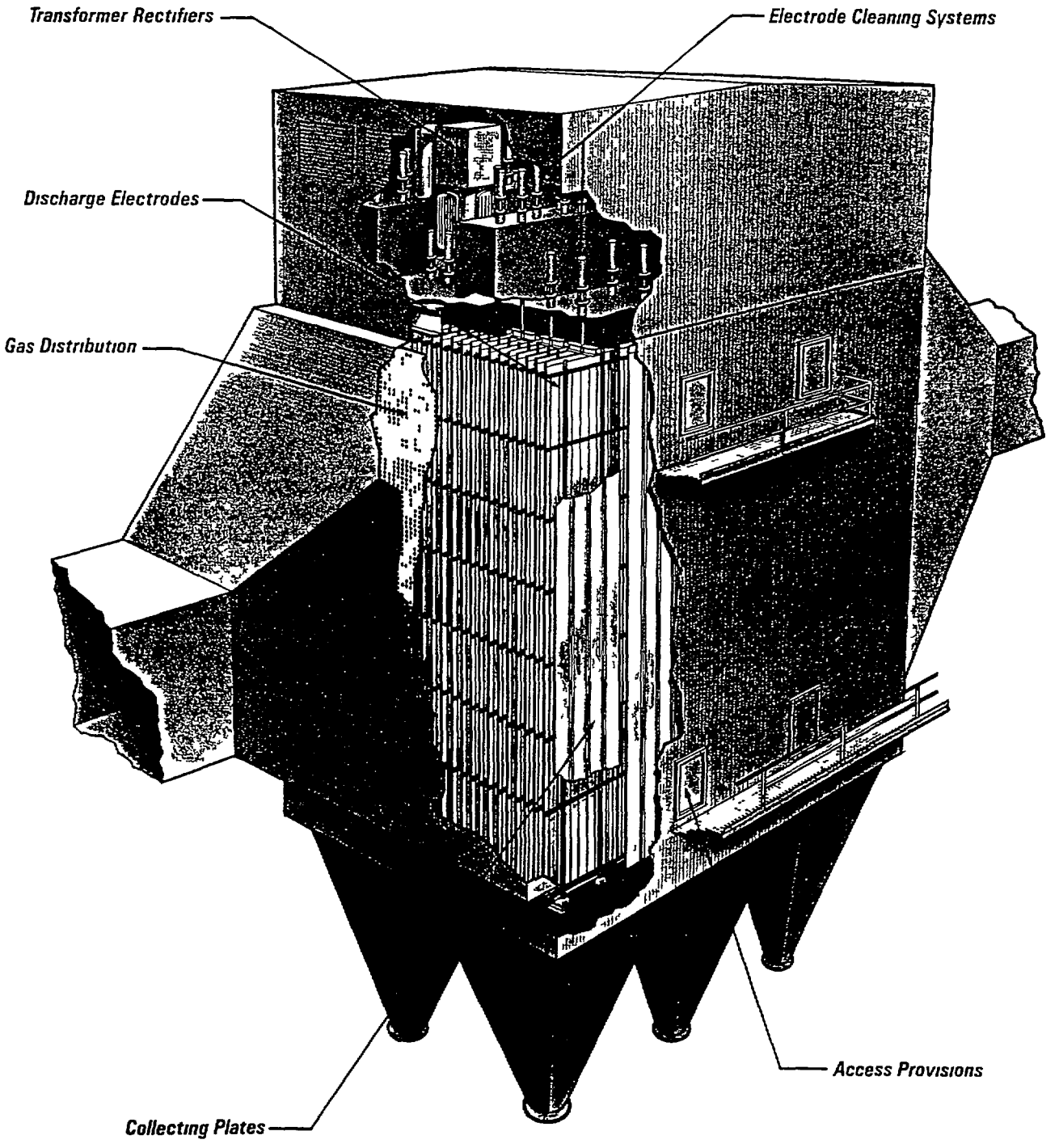

Discharge Electrodes

Twisted square bar electrodes provide uniform corona discharge with high voltage-low current electrical characteristics Rigidly mounted in tubular mast assemblies, this rugged electrode configuration features low power consumption and high reliability

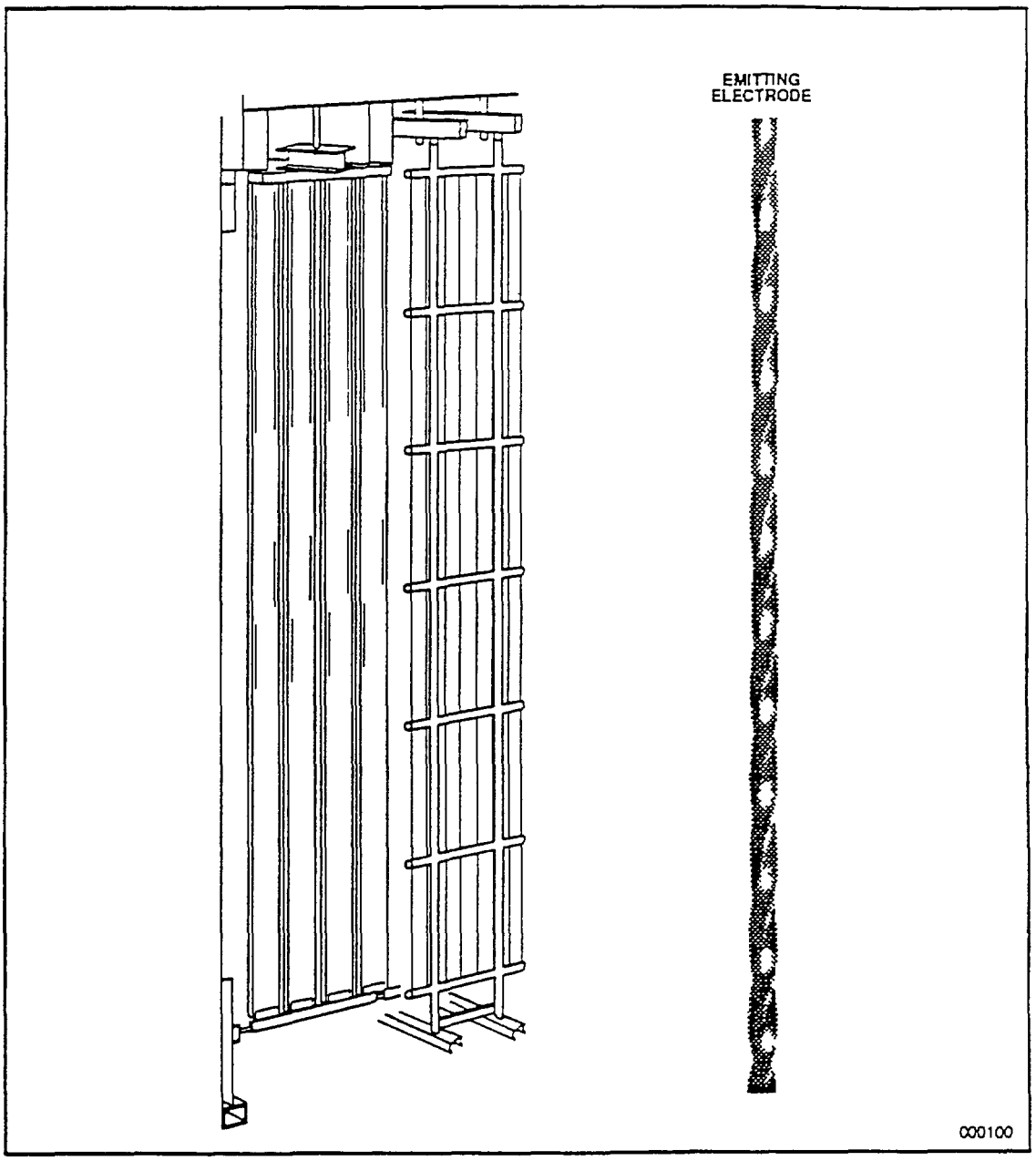

Collecting Plates

Integrated panel design provides uniform rapping energy distribution for controlled, optimized plate cleaning Roll formed profile provides quiescent flow zone directly opposite the discharge electrodes to enhance collection and minimized re-entrainment

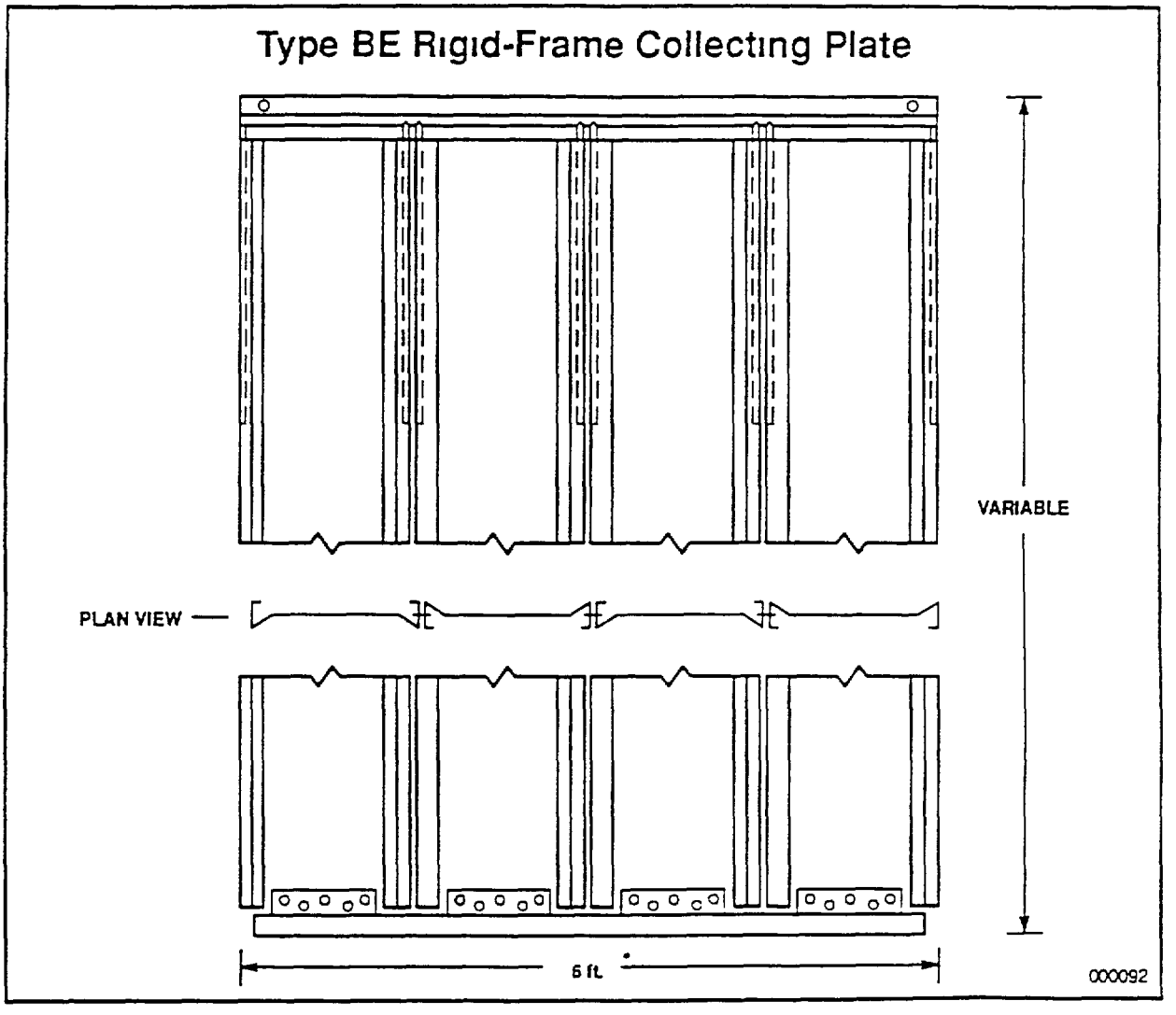

(*) 6' with 4 - 18" plates shown, 9' with 6 - 18" plates is similar

Collecting Plates

Collecting plates are rapped at the top-center by a vertical impact force applied to the plate support header beam Rigid transmission paths into each 18 inch wide panel maximize the uniform distribution of cleaning energy without requiring excessive impact force This cleaning system design provides

- effective cleaning at low impact levels
- extra margin to respond to upset conditions requiring higher energy levels
- removal of even the most tenacious of particles

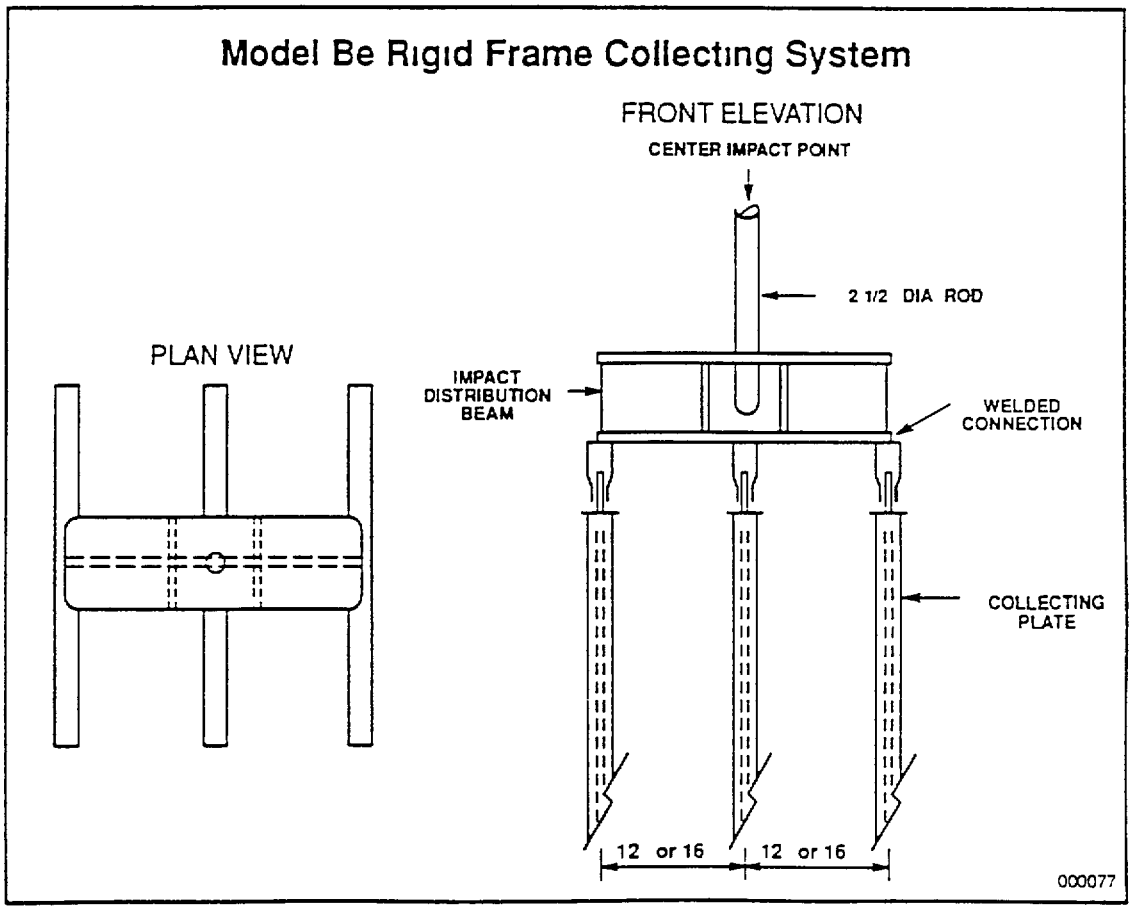

Electrode Cleaning System

System Design

The GE collecting plate and discharge electrode cleaning systems utilize effective and reliable electromagnetic impact rappers to dislodge accumulated ash These roof mounted rappers generate cleaning forces by the gravity drop of a cylindrical steel impactor Each impactor weighs 20 lbs and is electromagnetically lifted from 0 to 12 inches which provides 0 - 20 foot-pounds of impact force adjustability Individual rapper impact Intensity is simply adjusted by controlling the height of lift setting

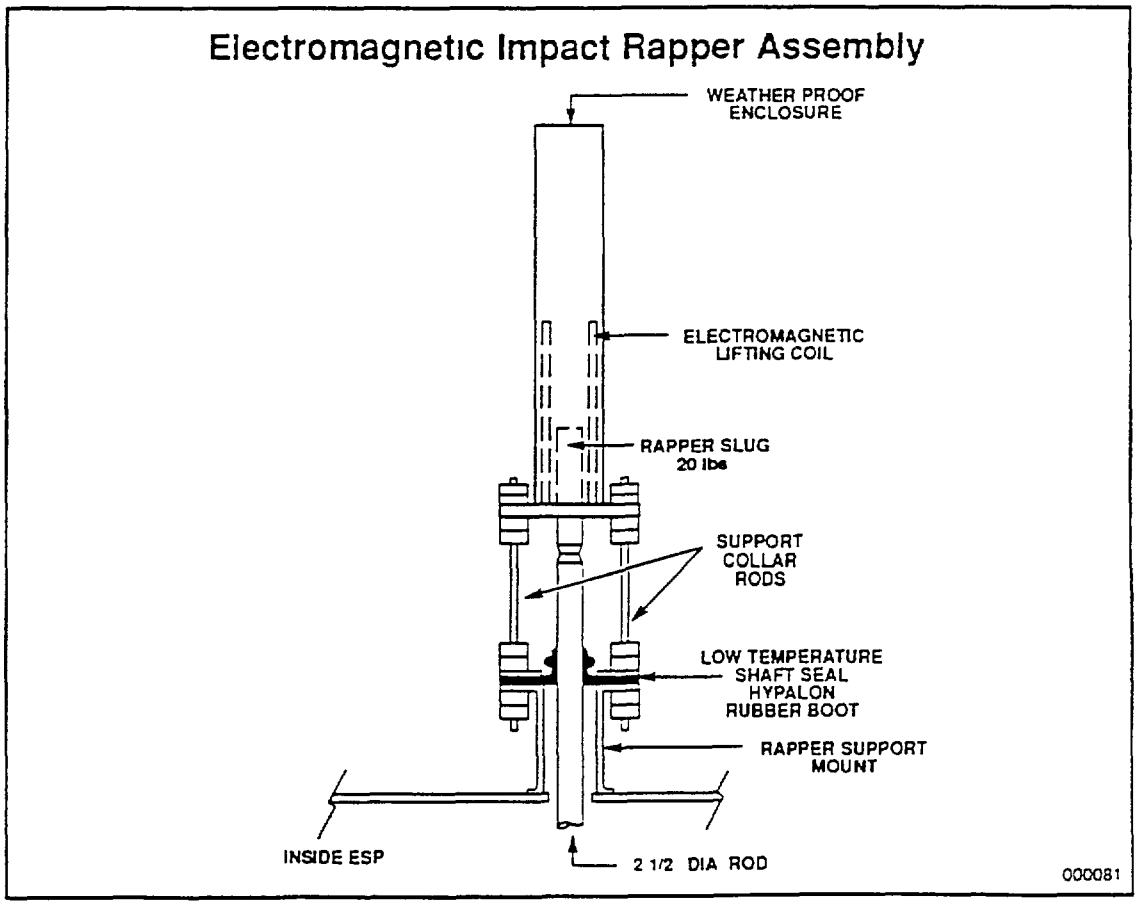

Electrode Cleaning Systems

Ash removal from the collecting plates and discharge electrodes is effectively accomplished by roof mounted electromagnetic impact rappers GE roof mounted rappers feature on-line intensity and frequency adjustment and inspection/service capabilities The electromagnetic rapper system is Ideally suited for use with the GE Intelligent Precipitator control system to provide operating adjustments via automatic programmed control strategies or remote operator command

Model BE Rigid Frame Rapping Systems

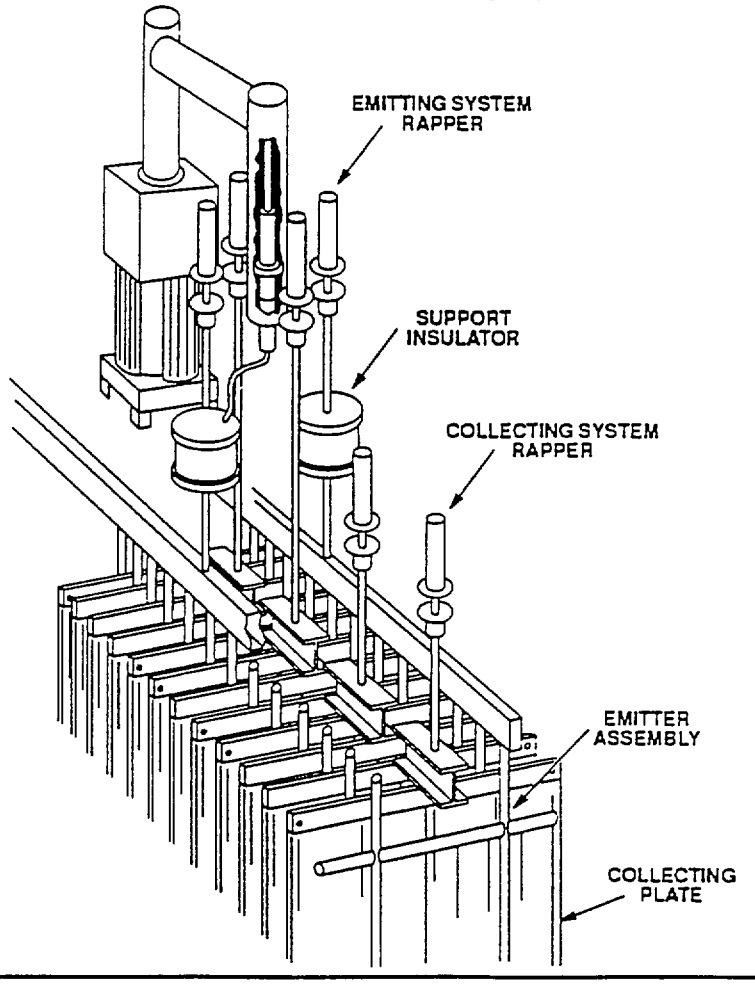

Casing Design

Rigid modular side panel design features bolted construction prior to seal welding Structural wide flange roof construction maintains proper alignment and support of collecting plate and discharge electrode systems

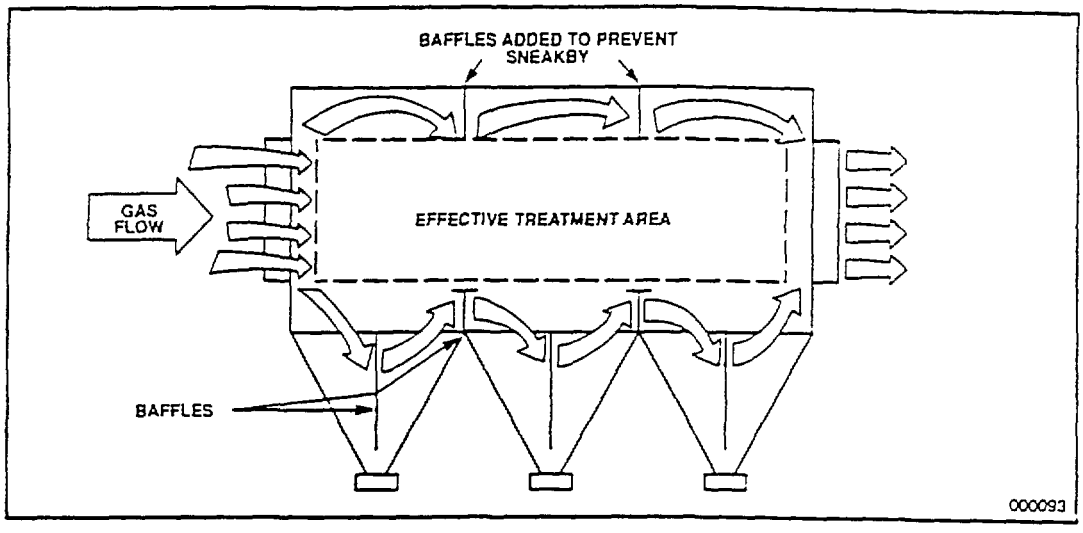

Gas Distribution

Gas flow control devices qualified by up-to-date modeling techniques help achieve uniform gas velocity throughout the treatment zone to provide highest efficiency and minimum pressure drop

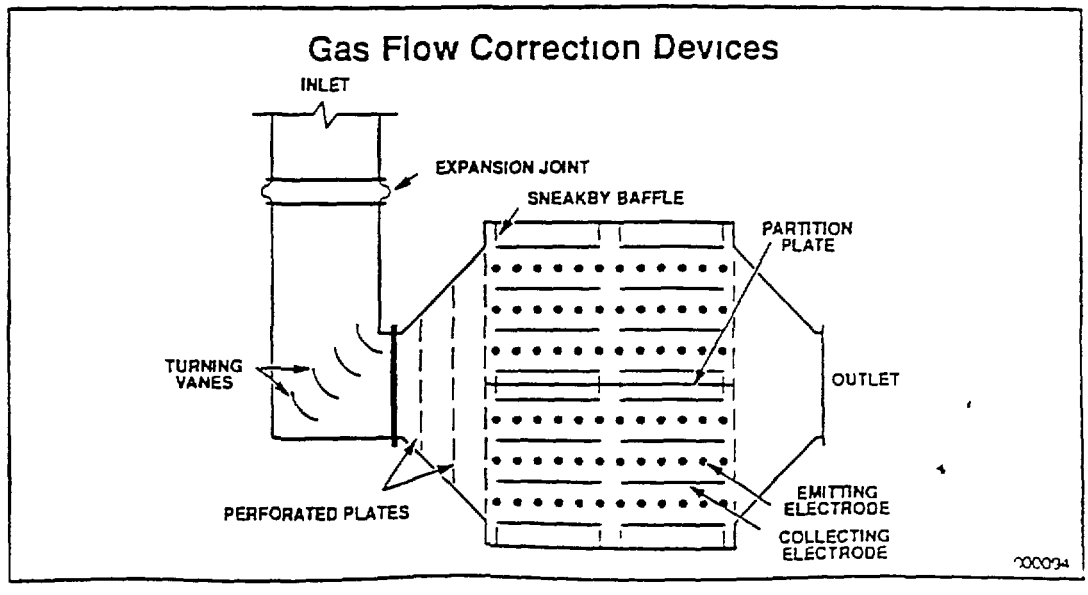

Control Flexibility

The impact intensity and frequency of each rapper can be individually adjusted by manual or automatic control On-line adjustment capability provided by this design allows precise rapper settings to optimize performance under varying operating conditions In addition to optimum system performance, this control flexibility can maximize component life

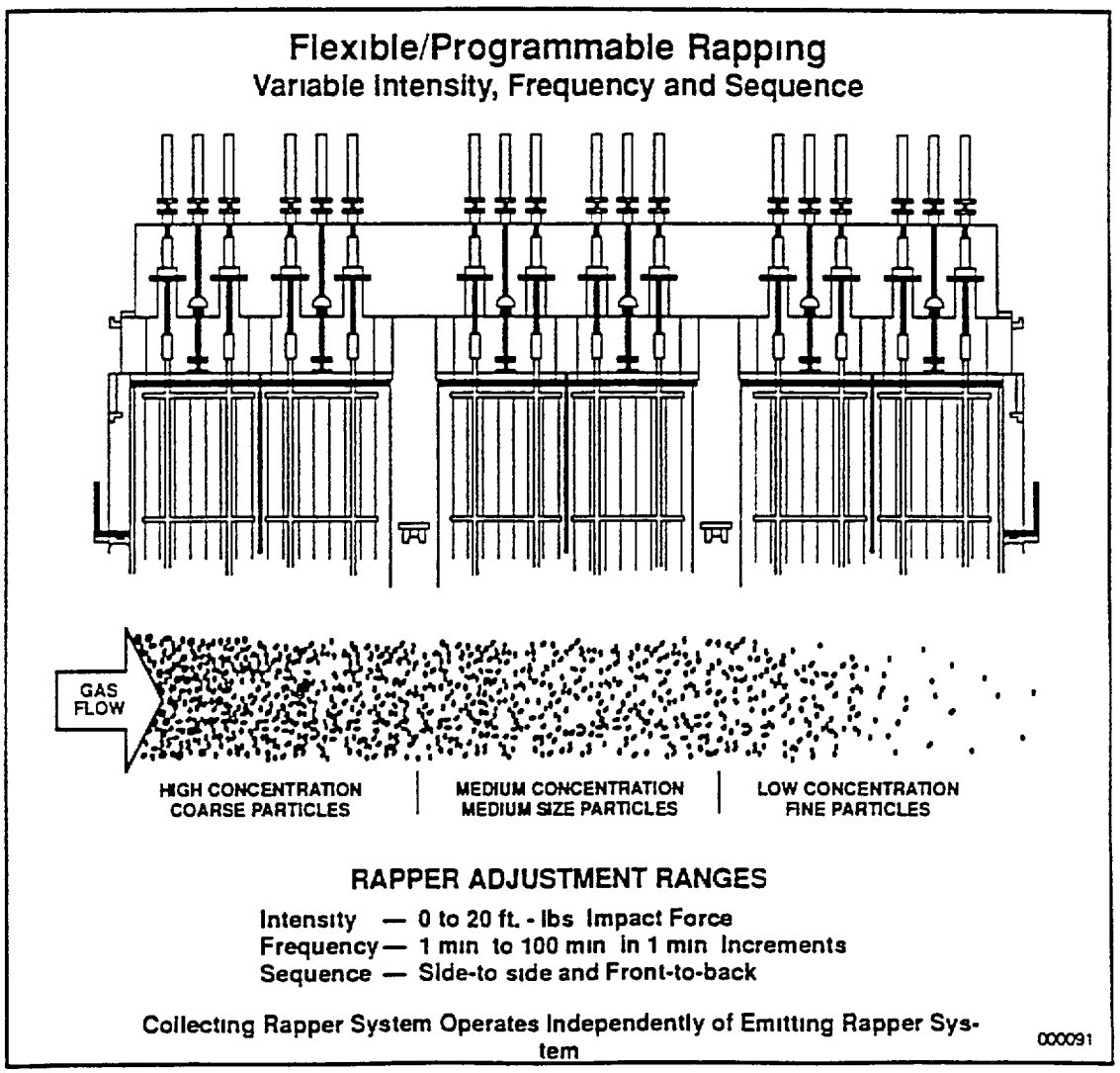

Exhibit 1 3-5

Dear Mr Hurvitz

GE Environmental Systems is pleased to submit the following budgetary proposal for Electrostatic Precipitators to be installed on one (1) 500 MW coal fired boiler for a Kazakstan Power Plant This proposal is in response to your Request for Proposal dated March 6 1996

Preliminary Precipitator Size

The preliminary size to meet the specified design parameters for one (1) 500 MW boiler is two (2) GE Model No BE1 2x38(12)48-(8x1 5)-4 4P Electrostatic Precipitators Each of the two (2) Electrostatic Precipitators (ESP's) will have sixteen (16) 55 KV DC transformer-rectifiers

Design/Performance Parameters per Boiler

Gas Volume	1 960 000 acfm 925 12 Am^3/sec
Gas Temperature	284°F 140°C
Operating Pressure	-11 8" W G -300 MM W G
Collecting Plate Area	1 050 624 ft^2 97 603 M^2
SCA	536 ft^2 / 1 000 acfm 105 5 M^2/M^3/Sec
Gas Velocity	4 48 ft/sec 1 366 M/sec
Aspect Ratio	1 5
Inlet Dust Loading (max)	17 45 grs/acf 62 500 mg/Nm^3
Efficiency %	99 84
Outlet Stopper	100 mg/Nm^3

Technical Data

Construction Design	
No of ESP's per Boiler -	Two (2)
Chambers per ESP	One (1)
No of Electrical Fields in Depth	Eight (8)
TR sets per ESP's	Sixteen (16)
Field Height	48'-0" (14 63M)
Cells per Chamber Width	Two (2)
Bus Sections per Chamber	Sixteen (16)
Gas Passages per ESP / Spacing	76 / 12" (304 8 mm)
No of Hoppers per ESP	Sixteen (16)
Hopper Valley Angle	55°
Electromagnetic Impact Rappers Emitting / Collecting (per ESP)	96 / 208
Approximate Dimensions (per ESP)	117'-0" (35 66 m) length * 80'-2" (24 43M) Width 78'-3" (23 85M) Height **
(*) including inlet/outlet transition duct nozzles	
(**) Hopper Outlet flange to top of penthouse roof	

Exhibit 1 3-5

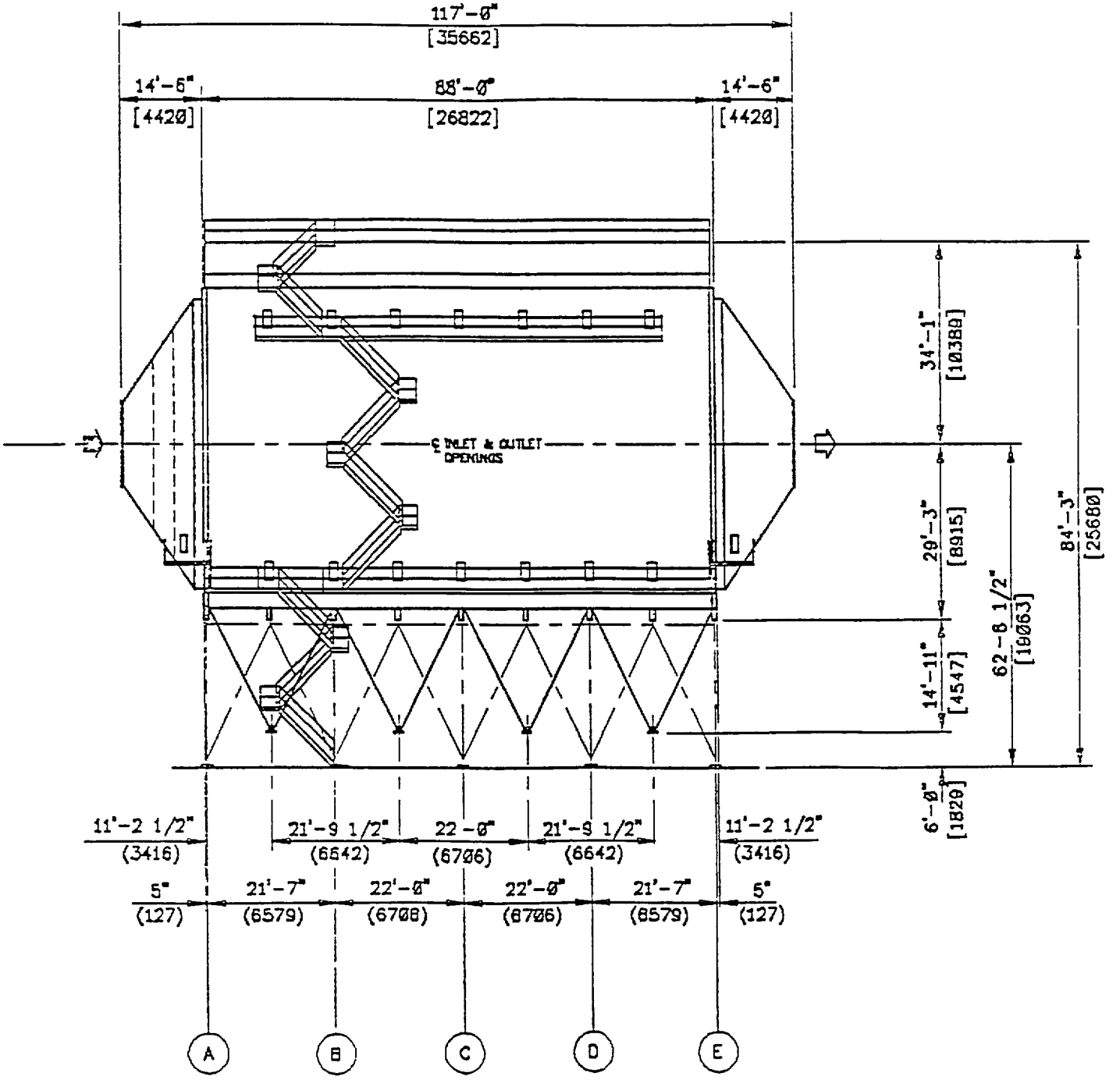

2 ELEVATION
800

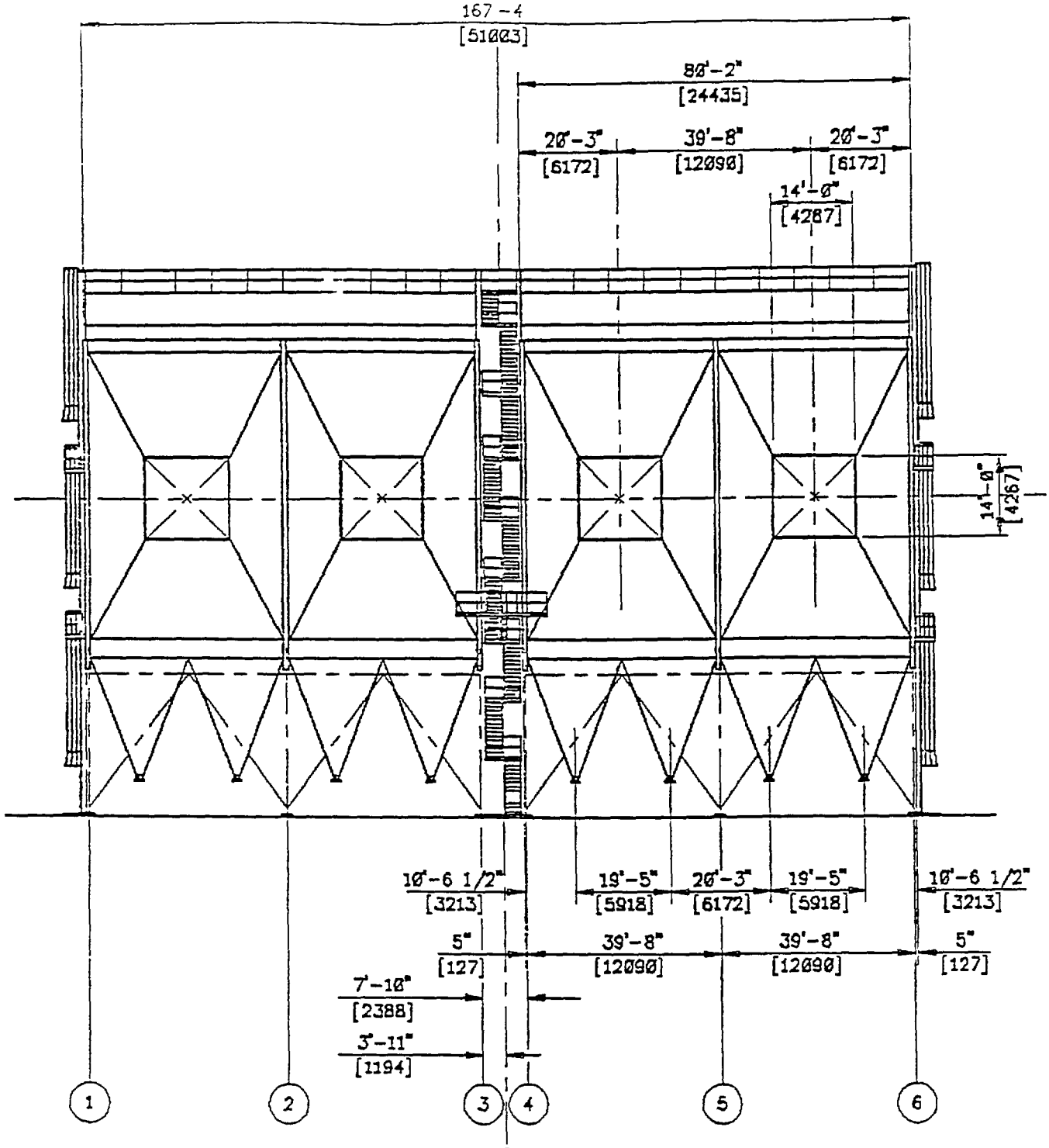

PRECIPITATORS ARE SYMMETRICAL ABOUT THIS CENTER LINE

1/800 ELEVATION

NOTE
DIMENSIONS AS SHOWN, ARE TYPICAL FOR OUTLET ELEVATION

Exhibit 1 3-5

Exhibit 1 3-5

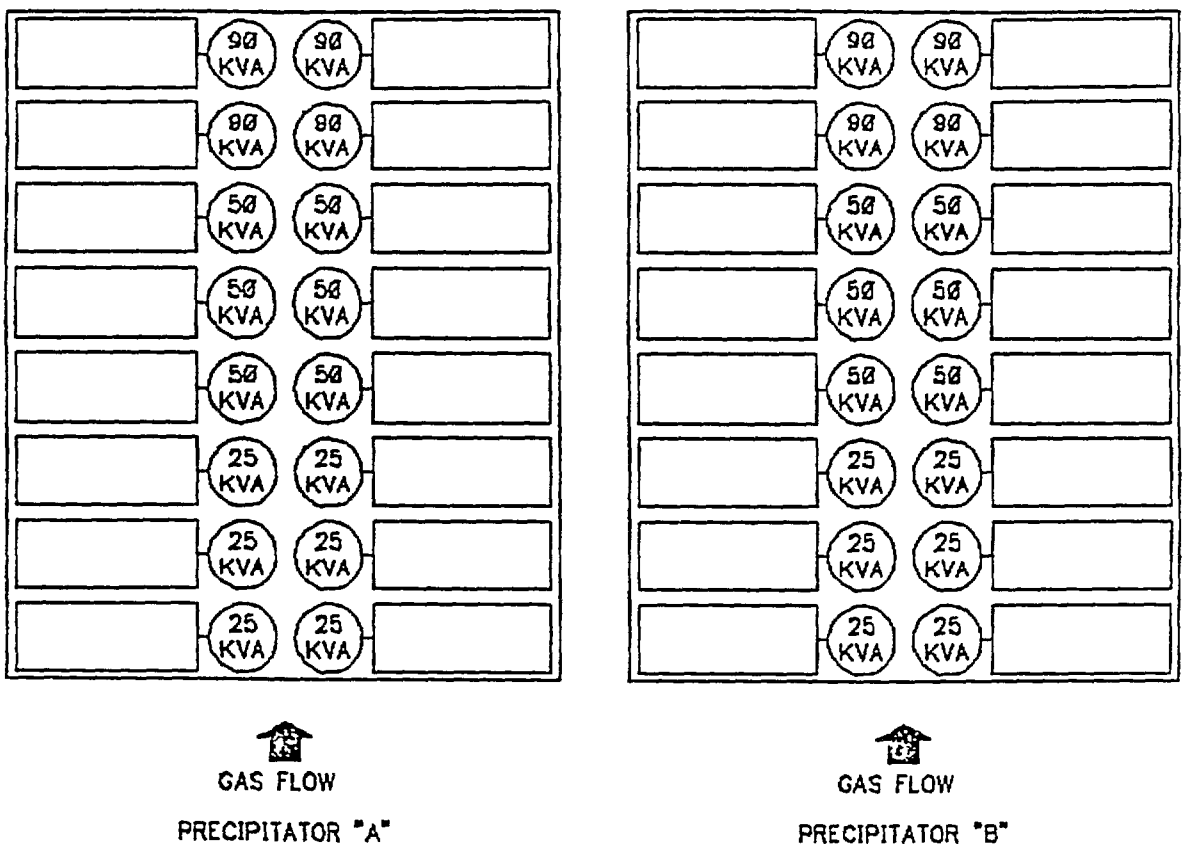

POWERING ARRANGEMENT DIAGRAM
ALL TR S ARE 55KV-DC

Exhibit 1 4-1

What is Flue Gas Conditioning?

Flue gas conditioning is the controlled injection of small quantities of sulfur trioxide into the flue gas stream reducing the resistivity of the fly ash and permitting its collection in the existing precipitator When flue gas conditioning is installed on units that have switched to low sulfur coal sulfur oxide emissions are significantly reduced complying with environmental regulations and utility standards

"If regulations tell me to reduce emissions of sulfur oxides, why should I inject them?"

It s a common question The answer lies in the difference between sulfur dioxide and sulfur trioxide When high sulfur coals are burned they yield large quantities of SO but very small amounts of SO_3

This SO_3 however is very important because it naturally combines with moisture in flue gas to create sulfuric acid This sulfuric acid (H_2SO_4) is deposited on fly ash particles to form a thin conductive film which lowers the electrical resistance of the ash allowing it to be readily collected by electrostatic precipitation

When low sulfur coals are burned natural SO levels are reduced to the point that they no longer can create enough H_2SO_4 to properly condition the fly ash and reduce its resistivity High resistivity ash passes through precipitators sized for high sulfur coal creating unacceptable emissions

Sulfur trioxide FGC systems a developed and patented by Wahlco inject into the gas stream small quantities of SO This newly introduced SO reacts in the same way a naturally occurring SO_3 lowering ash resistivity and allowing easy collection

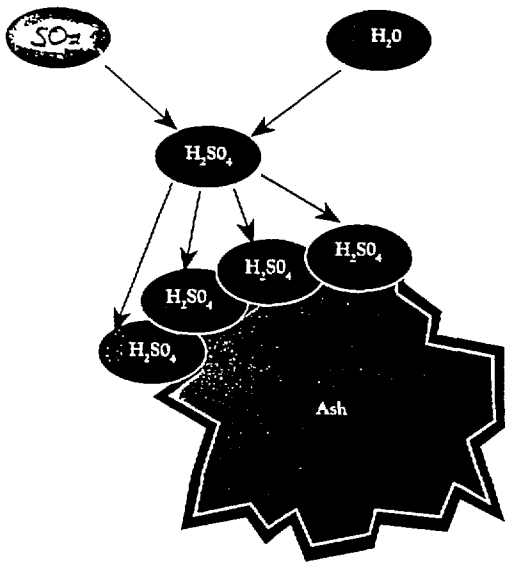

SO and moisture combine to form sulfuric acid which is deposited on the fly ash surface forming a conductive film and lowering the electrical resistance of the ash

Typical Sulfur Oxide Emissions from Coal Burning Boilers

Sulfur Oxides PPMV		3.5% Sulfur Content	0.5% Sulfur Content	0.5% Sulfur & FGC
Entering Precipitator	SO_2	2600	370	371
	SO_3	26	4	10
Entering Stack	SO_2	2600	370	375
	SO_3	7	4	4

Flue gas conditioning does not increase emission levels of sulfur oxides (SO or SO_3)

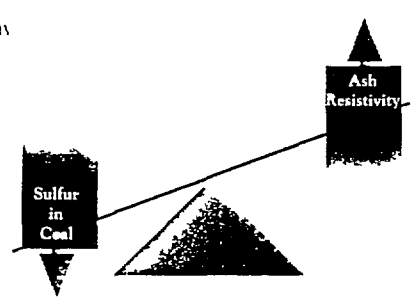

A sulfur content reduced ash resistivity more as

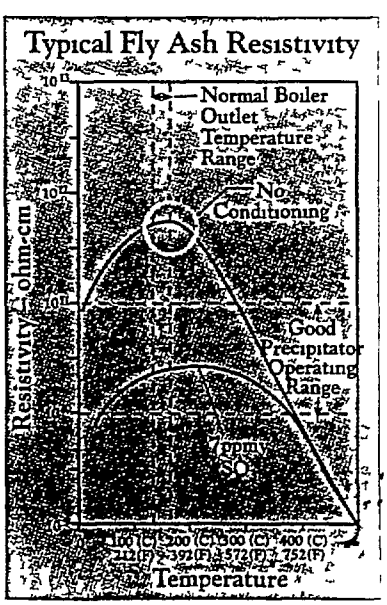

BEST AVAILABLE COPY

Flue Gas Conditioning Basics

Exhibit 1 4-1

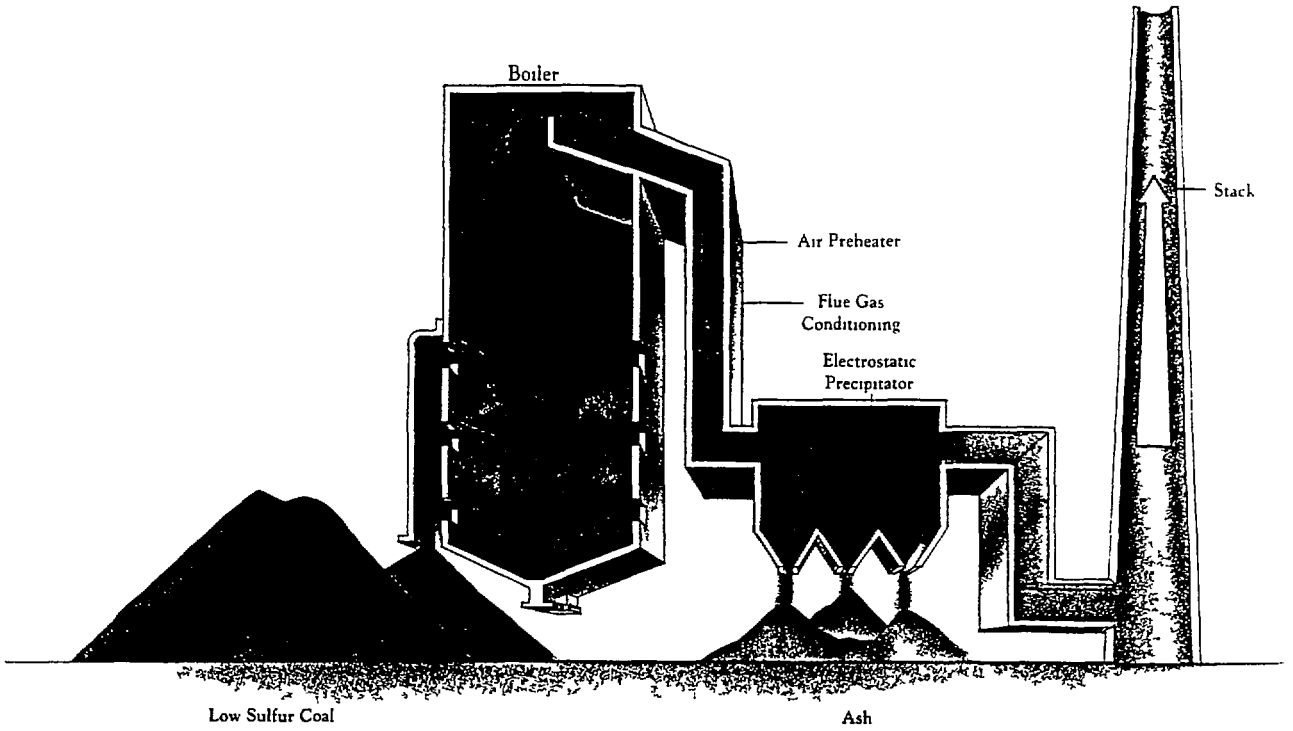

Why Is Flue Gas Conditioning Needed?

Burning coal to produce electricity causes the emission of sulfur oxides such as sulfur dioxide and sulfur trioxide or acid gas This gas is carried into the atmosphere along with fly ash generated from the combustion of the coal When these acid gases combine with moisture in the atmosphere they form dilute solutions of sulfuric acid or acid rain which fall back to earth damaging the environment

High sulfur coal has traditionally been the standard fuel for coal fired boilers and the fly ash produced from this fuel is readily collectable in electrostatic precipitators Regulations restricting sulfur dioxide emissions are being implemented worldwide In an attempt to comply with these new limitations the power industry ha begun the switch to lower sulfur coals Low sulfur coal tends to generate more fly ash and flue gas per megawatt Because of the higher resistivity of thi ash it is difficult to collect in existing precipitators

Two solutions are to install much larger and more expensive precipitators or fabric filter for collection of the fly ash Another more cost effective alternative is flue gas conditioning

Flue gas conditioning restores the collection efficiency of the precipitators to performance levels consistent with the firing of high sulfur coal

Wahlco offers a wide variety of methods to create sulfur trioxide for injection each suited to varying utility applications Additionally we supply systems to inject ammonia which either by itself or in combination with sulfur trioxide provides unique solutions to particularly difficult fly ash collection problems

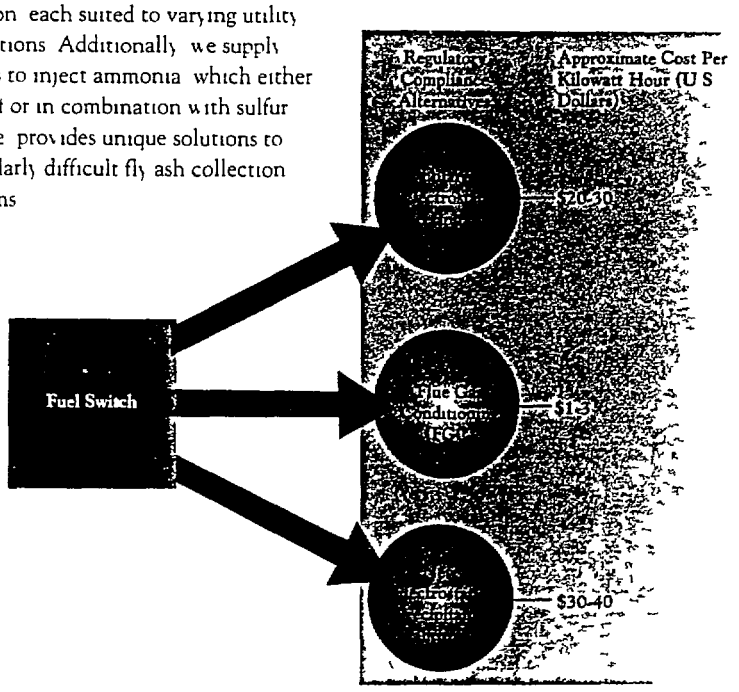

A m 500 MW b i

BEST AVAILABLE COPY

Exhibit 1 4-1

Granular Sulfur Flue Gas Conditioning

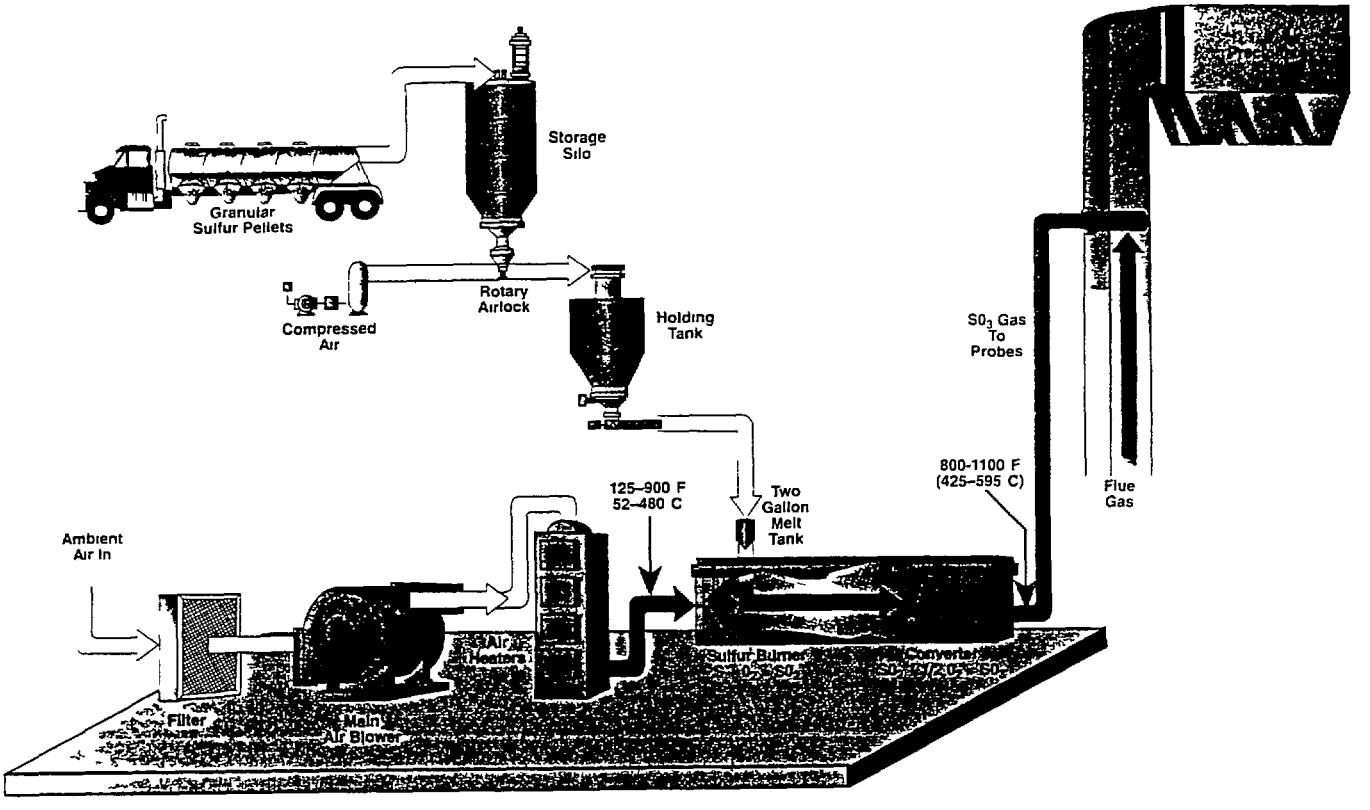

Simplifies Maintenance, Reduces Auxiliary Equipment, An Alternative for Today's Lean Operating Environment

Many electric utilities have been re engineering and downsizing their operations reducing the number of personnel available to maintain auxiliary equipment For these utilities a dry granular alternative to traditional molten sulfur feedstocks may be attractive Granular sulfur eliminates the need for maintaining steam coils steam jacketed pumps associated traps and drains as well as the actual steam supply

Worldwide Experience With Dry Granular Sulfur

In North America the feedstock of choice has always been molten sulfur However because of a limited supply of molten sulfur some overseas Wahlco flue gas conditioning systems have successfully employed granular sulfur Wahlco is the only supplier of FGC equipment with commercial experi ence using dry sulfur feedstock

Reliable Design Provides Superior Availability

Wahlco s granular sulfur system uses our sulfur burner/converter design proven on over three hundred systems over more than two decades while still taking advantage of a dry storage and delivery process Like all Wahlco FGC designs we back our dry sulfur systems with a risk free precipitator performance guarantee as well as a 95% equipment availability guarantee

WAHLCO

BEST AVAILABLE COPY

SECTION 2 - NITROGEN OXIDE EMISSION CONTROL

2 1 Background

2 1 1 Effect of Nitrogen Oxides

Nitrogen oxides in the atmosphere consist primarily of nitric oxide (NO) and nitrogen dioxide (NO_2) These two forms of gaseous nitrogen oxides are significant pollutants in the lower atmosphere Although at the point of discharge from man-made sources most nitrogen oxide is in the form of NO, this is readily converted to NO_2 by reaction with ozone present in the atmosphere Since the actual ratio of NO to NO_2 is not always predictable, nitrogen oxides are frequently designated as NOx When expressing NOx concentrations in units of mass, the concentration is always expressed as though nitrogen dioxide (NO_2) was the only form present Nitrogen dioxide is generally considered to be the more harmful for of the pollutant In addition to its properties as a strong oxidant, it combines with water in the atmosphere to form nitric acid

Most of the NOx found in our environment is produced by natural phenomenon such as lightning, biological process and volcanic activity Only about 10 % of NOx emissions are from man-made sources and about 50 % of these emissions are from fossil fired heat and power plants The other major source is from motor vehicle exhaust

Nitrogen oxides, in concentrations normally found in outdoor ambient air, has not been demonstrated to have a significant harmful effect on humans or animals and the physiological effects of NOx, where they have been identified, appear related to short term high concentration exposure rather than to long duration exposure at lower concentrations Both nitric acid and ozone, produced by reaction of nitrogen dioxide, have been demonstrated to have a far greater impact on human, animal and plant life In fact, ground level ozone is among the most toxic pollutants regulated under air quality guidelines In many urban areas, activities associated with the control of NOx emissions are directly related to the presence of unhealthy concentrations of ozone in the ambient air The chemical activity of NOx in the atmosphere is shown in Exhibit 2 1-1

2 1 2 Regulation of Nitrogen Oxides in the Atmosphere

Ambient air quality standards are generally established to limit the allowable concentration of nitrogen oxides NOx concentration limits may include values for both short term exposure (1 hour and 24 hours), as we and long term exposure (annual average) The World Health Organization (WHO) the US EPA as well as other organization have developed reference standards for NOx concentrations which may serve as guidelines to countries preparing or revising their ambient air quality standards When evaluating the impact of a new or operating source on the air quality it should be remembered that there are many potential source of NOx contributing to the measured concentration, especially in urban areas, and the impact of the power station may be relatively small when compared with these other sources

2 1 3 Emission Limits

Since emissions of nitrogen oxides from fossil fired power stations can be relatively difficult to control when compared with particulate emissions for example, World Bank emission standards for a fossil plant or unit include the following requirements

FUEL	PRESENT LIMIT mg/Nm^3	PROPOSED LIMITS(1995) mg/Nm^3
Coal	735	650
Oil	360	360
Gas	240	240

United States emission limits for Existing Coal-Fired Plants have recently been set as follows

- 1995 Wall Fired Units - 610 mg/Nm^3
- 1995 Tangential Fired Units - 550 mg/Nm^3
- Limits for other type boilers, and for 2000 and beyond are still under consideration

These emission limits have been set with full consideration of the fact that the limits can be achieved by careful control of the combustion process and that costly, post combustion control technologies would not be required

United States emission limits for New Coal-Fired Plants are lower They are normally based on Best Control Technology with the environmental agency frequently specifying the required control technology For new boilers emission limits have been set as low as 200 mg/Nm^3 in some cases

Proposed Kazakstan emission limits have also been set quite low,

FUEL	PROPOSED LIMITS, mg/Nm^3
COAL	240
OIL	185
GAS	125

These emission limits would, in general require post combustion controls to be applied to the flue gases

2 2 Overview of Nitrogen Oxide Control Technologies

In contrast to emissions of particulate matter, which is dependent upon the non-combustible mineral content of the fuel, and sulfur oxides, which are dependent upon the sulfur content of the fuel, oxides of nitrogen formed during combustion are not specifically related to the composition of the fuel burned

There are two main sources of NOx formation in combustion, thermal NOx and fuel NOx Thermal NOx is produced from the molecular nitrogen in the combustion air and its formation is very strongly dependent on the combustion temperature, with higher combustion temperatures producing greater amounts of NOx Fuel NOx is produced by the combustion of organic nitrogen compounds found in the fuel Its formation is dependent on the amount of nitrogen in the fuel and the

concentration of oxygen present during combustion, with fuel rich combustion conditions (low excess air) producing lower emissions of NOx

The complex NOx chemistry scheme is shown in Exhibit 2 2-1 Production of NOx can be controlled during combustion by maintaining a low temperature and low excess air, by the use of staged combustion While staged combustion reduces NOx production, it may have unfavorable side effects producing increased emissions of CO and higher concentrations of unburned carbon both the result of less complete combustion

It should also be understood that the oxidation reactions producing NOx during combustion are reversible and that NOx formed in one area of the furnace, at oxidizing conditions, can be reduced by modifying the conditions in the furnace to produce a reducing atmosphere Nitrogen oxides passing through such an environment are reduced to harmless elemental nitrogen (N_2)

Technologies available for the reduction of NOx emissions are generally of two basic types

- Combustion Control Technologies
- Post Combustion Control Technologies

Since post combustion control technologies generally require the introduction of a chemical agent to reduce the NOx, operating costs are an important consideration For that reason, attention is usually given to the application of combustion control technologies to achieve the maximum reduction in NOx emissions before post combustion control technologies are applied, thereby limiting the requirements and cost of chemical agents

2 3 Combustion Control Technologies

Combustion modification techniques and equipment developed to reduce NOx production are based on maintaining a low temperature combustion zone and low excess air by the use of staged combustion Staged combustion delays the mixing of fuel and combustion air, creating an initial fuel rich combustion zone with air added downstream to complete the combustion The staging may be accomplished by several methods, both by staging the fuel/air mixture as part of the burner design and by limiting the total air flow to the burner, introducing additional combustion air into the furnace downsteam of the burners

In addition, the method of staging depends upon the type of boiler firing system since wall fired boilers, utilizing individual burners are fired differently from tangentially fired boilers utilizing fuel injection nozzles Both types of systems are described below

2 3 1 Wall Fired Boilers

Wall mounted coal fired burners, designed for high combustion efficiency without regard for NOx production, produce a short, high temperature turbulent fire ball flame with in the furnace Low NOx burners (LNB), by contrast, produce a longer, cooler flame Such LNB's all have several features in common

- A means of introduction of air and fuel which slows the rate of mixing
- A reduced concentration of oxygen (combustion air) in critical NOx formation zones
- A means of reducing the amount of fuel burnt at peak flame temperatures

Key features of a Low NOx wall fired burner are shown in Exhibit 2 3-1 while additional details of a commercially available burner, manufactured by Babcock & Wilcox (DRB-XCL) are shown in Exhibit 2 3-2 Such burner designs are available from a number of manufacturers It should be noted that the control of air flow rates to each of the combustion zones is an important requirement of such burners

NOx production can be further reduced by injection of overfire air in the furnace area above the main burner combustion zone In this concept, a portion (10 to 20 %) of the combustion air, which normally is used as secondary air to the burners, is routed instead to a special windbox with ports and/or nozzles mounted above the burners This vertical air staging reduces the stoichiometry in the main combustion zone where both fuel NOx and thermal NOx are formed Overall combustion of the fuel is not changed significantly but less NOx is formed due to the reduced availability of oxygen in the high temperature combustion zone Fuel combustion is completed, at lower temperature, in the overfire air zone A typical overfire air system is shown in Exhibit 2 3-3

Performance of low NOx combustion systems have been demonstrated in a number large utility boiler installations and have been studied in detail in a program funded by the US Department of Energy (DOE) at the 500 MWe Plant Hammond coal fired boiler The study indicates the following results can be achieved (Exhibit 2 3-4)

Test Environment	NOx Emission Reduction, %	NOx Emissions lb/mmBTU	NOx Emissions mg/Nm^3
Baseline	-	1 20	1475
Overfire Air (OFA)	24	0 91	1120
LNB's	48	0 63	775
LNB's + OFA	67	0 40	490

2 3 2 Tangentially Fired Boilers

Staged combustion and overfire air can also be applied in tangentially fired furnaces to achieve NOx reduction Combustion Engineering (ABB/CE) has developed a "Concentric Firing System" which combined with overfire air optimizes NOx reduction capability of existing units while minimizing unit modifications This system uses bulk furnace staging in which a portion of the combustion air, usually introduced in the combustion zone, is diverted to delay the air-fuel mixing process A portion of the secondary air is diverted away from the fuel stream towards the furnace water-wall tubes A fuel rich region, with limited oxygen is created in the center of the furnace and this is surrounded by a fuel lean zone containing the diverted (offset) combustion air (Exhibit 2 3-5)

As in the case of wall fired boilers, a portion of the secondary combustion air may be introduced above the main combustion zone for delayed mixing and to complete combustion The ABB/CE designation for these technologies is the Low NOx Concentric Firing System (LNCFS) and several "levels" of staging are described in Exhibit 2 3-6, along with an estimate of the effectiveness of each in reducing NOx emissions Tests at the Lynn Haven 180 MWe power station(Exhibit 2 3-7), also sponsored by the US DOE, indicate a reduction in NOx emissions of 45 %, from about 0 64

lb/mmBTU (785mg/Nm^3) to about 0 35 lb/mmBTU (430 mg/Nm^3) Note that baseline NOx emissions from tangentially fired boilers are normally less than from wall fired boilers even before the LNCFS technology is applied

2 3 3 Additional Combustion Modification Technologies

Reburning uses staged fuel injection in which a secondary fuel such as natural gas representing about 10 to 20 % of the total furnace heat input, is injected above the main burners This creates a fuel rich, oxygen deficient "reducing" zone in the furnace where NOx formed in the primary combustion zone is chemically decomposed to harmless elemental nitrogen by the incomplete combustion of the secondary fuel Additional combustion air is then introduced as overfire air above the secondary fuel injectors to complete the combustion process without production of additional NOx

This gas reburning technology is shown in some detail in Exhibit 2 3-8 which indicates that a reduction of more than 65 % (from 920 mg/Nm^3 to about 300 mg/Nm^3) can be achieved by this technology

2 3 4 Comparison of Combustion Modification Technologies

Exhibit 2 3-9 describes schematically each of these NOx reduction technologies and their expected effectiveness is summarized in Exhibit 2 3-10

Possible combustion control technologies applicable to oil and gas fired boilers, although not discussed during the training program, are presented in Exhibit 2 3-11, and include, in addition to the technologies described above, the use of Flue Gas Recirculation This technology introduces flue gas into the combustion air, diluting the oxygen content and reducing flame temperature Reductions of 30 to 55 % from baseline NOx emissions are indicted

2 4 Post Combustion Control Technologies

The methods of NOx emission reduction described previously are designed to limit the formation of NOx during the combustion process within the furnace Where the applications of such technologies do not achieve the required NOx emission limit, post combustion treament of the flue gas is required to reduce the NOx after it has been formed and before it is released to the environment Generally these methods are based on the chemical reaction between ammonia gas (NH_3) and NOx and may occur external to the boiler in a vessel containing catalyst, within the boiler in a thermally reactive zone or through the application of a combination of both technologies Selective Catalytic Reduction (SCR) of NOx as well as Selective Noncatalytic Reduction (SNCR), and the combined processes, are described below

2 4 1 Selective Catalytic Reduction

Selective Catalytic Reduction (SCR) is recognized worldwide as the most effective NOx emission control technology for both utility boilers and combustion turbines The highly selective reaction between ammonia and nitrogen oxide ($4NO + 4NH_3 + O_2 \rightarrow 4N_2 + 6H_2O$) produces no harmful byproducts and is capable of achieving up to 90 % reduction in NOx emissions with amost no emission of excess ammonia into the atmosphere It is the only technology with such potentially high NOx reduction efficiency

Since the reduction consumes more than 60 kilograms of pure ammonia for each 100 kilograms removed from the flue gas, it usually considered most economical to apply the technology to boilers that have been designed to minimize NOx production through low NOx combustion modifications

The selective reaction occurs in the presence of specialized catalyst when flue gas containing NOx is contacted with ammonia in the temperature range of 300 to 400 °C, a temperature window normally found between the economizer outlet and the combustion air heater in a utility boiler application The catalyst is normally installed in blocks, or modules, in layers within the reactor (Exhibit 2 4-1) which is installed at that location (Exhibit 2 4-2)

The presence of fly ash in the flue gas, in high concentrations, impacts both the chemical and physical properties of the catalyst and significant catalyst development efforts have been devoted to reducing both catalyst erosion and deactivation through poisoning since catalyst replacement can have a significant effect on the overall NOx reduction costs An additional problem is the undesirable side reaction caused by the catalyst where a small amount of SO_2 in the flue gas is oxidized to SO_3 and the potential subsequent reaction of the SO_3 with ammonia in the flue gas to form ammonium bisulfite This undesirable material may cause air heater plugging problems under certain circumstances Catalyst improvements in recent years have been directed toward the reduction in SO_2 oxidation

SCR technology has been widely applied in Germany and Japan where NOx emission limits are lower than can be achieved by low NOx combustion technology Experience in the US and in other countries is very limited Highlights of the experience of STEAG in Germany with SCR systems are presented in Exhibit 2 4-3

2 4 2 Selective Noncatalytic Reduction

A significant reduction in investment cost is possible if the NOx reduction with ammonia could be achieved without the requirement for catalyst (and the catalyst chamber) and this has resulted the development of noncatalytic technology (SNCR) SNCR involves the injection of ammonia, or an ammonia producing reagent such as urea, into the flue gas in the upper furnace area where the temperature ranges from 850 to 1100 °C

The reaction temperature is one of the most important performance variables If the temperature is too cold, little reduction of NOx occurs and the injected ammonia passes through the system unreacted If the temperature is too high, a portion of the ammonia injected is actually converted to NOx, increasing the requirement for additional ammonia to limit NOx emissions

A more detailed description of the SNCR technology is found in Exhibit 2 4-4 A review of available SNCR performance data indicates that as increased NOx reduction is required, a large quantity of ammonia are required and a significant quantity (slip) is released into the atmosphere Exhibit 2 4-5 suggests that a 25 % reduction in NOx can be achieved while limiting the ammonia release (slip) to 5 ppm but increasing the emission reduction to 37 5 % would increase the ammonia release to 20 ppm An even more significant analysis are the chemical requirements to achieve these emission limits This evaluation indicates that ammonia requirements would almost 3 times as great for the SNCR technology as for the SCR systems described previously (Reagent cost information presented in this exhibit should not be used as reference since the SNCR technology is based on a much more costly source of ammonia, a urea containing reagent instead of the lower cost ammonia)

The limited NOx reduction capability of this technology, along with its inefficient use of reagent and potential for additional pollution in the form of ammonia has limited its application, especially for base loaded plants It is still a viable technology however where

- A small reduction in NOx is required to meet emission limits
- The boiler is operated infrequently and has a low annual capacity factor
- Emission limits vary with the season and NOx reduction is required only during certain months of the year, reducing annual operating costs

2 4 3 Hybrid (or Combined) Post Combustion Reduction Technologies

Attempts have been made to combine the advantages of both SCR and SNCR by operating the SNCR technology with high ammonia slip while utilizing a small bed of NOx reducing catalyst downstream of the economizer to achieve additional NOx reduction while, at the same time, reducing the ammonia emissions This catalyst may be installed in the ductwork between the economizer and air heater, in the air heater itself or in both locations

Exhibit 2 4-6 indicates the specific configuration investigated at the PSE&G 320 MWe coal fired Mercer Station while Exhibit 2 4-7 provides performance data for the combined Hybrid system Note that relatively high NOx emission reductions can be achieved with low ammonia slip when NOx reduction catalyst is present in the air heater as a final "clean-up" treatment stage Information relating to reagent use is not presented in this analysis Additional system performance projections prepared by WAHLCO are presented in Exhibit 2 4-8

2 5 Comparison of Alternative Technologies

The World Bank has completed a preliminary investigation of alternative control technologies and has concluded that combustion modifications are the most cost effective methods for reducing nitrogen oxide emissions from coal fired boilers (Exhibit 2 5-1) These systems which include low NOx burners, overfire air and combinations of both can achieve the proposed World Bank emission limits of 650 mg/Nm^3 In regions of poor ambient air quality, consideration may be given to stricter limitations on NOx emission for power plants but is should be remembered that power plants usually make only a minor contribution to ground level NOx or ozone concentrations, especially in urban areas, and that all sources of NOx should be investigated before emission limits from power plants are reduced to levels requiring the use of post combustion control technologies

SECTION 2 EXHIBITS

Exhibit 2 1-1

Exhibit 2 2-1

Exhibit 2 3-1

Exhibit 2 3-2

Exhibit 2 3-3

Exhibit 2 3-4

Exhibit 2 3-5

Exhibit 2 3-6

Exhibit 2 3-7

Exhibit 2 3-8

Exhibit 2 3-9

Exhibit 2 3-10

Exhibit 2 3-11

Exhibit 2 4-1

Exhibit 2 4-2

Exhibit 2 4-3

Exhibit 2 4-4

Exhibit 2 4-5

Exhibit 2 4-6

Exhibit 2 4-7

Exhibit 2 4-8

Exhibit 2 5-1

Exhibit 2 1-1

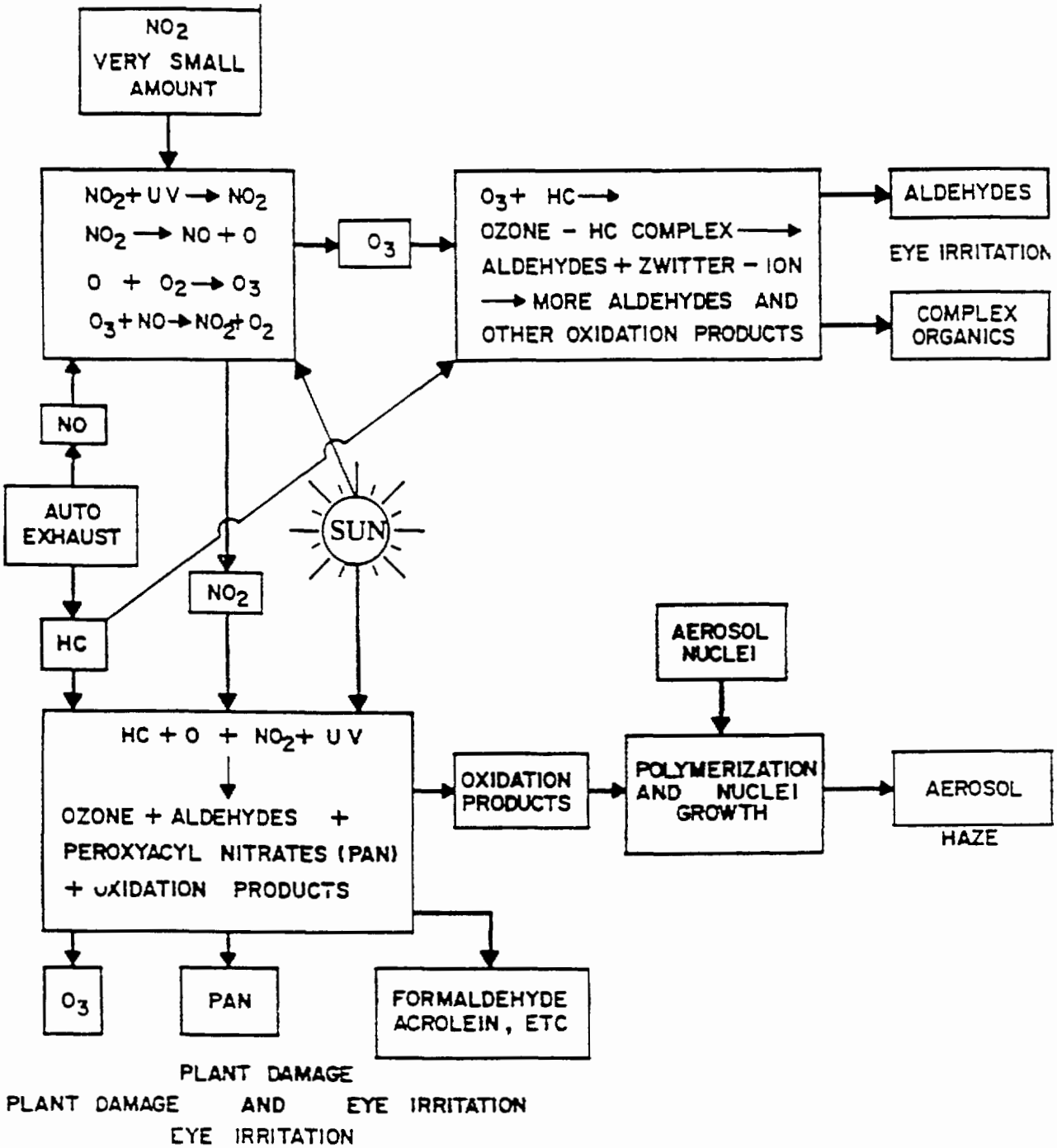

NOx Formation and Reaction

Exhibit 2 2-1

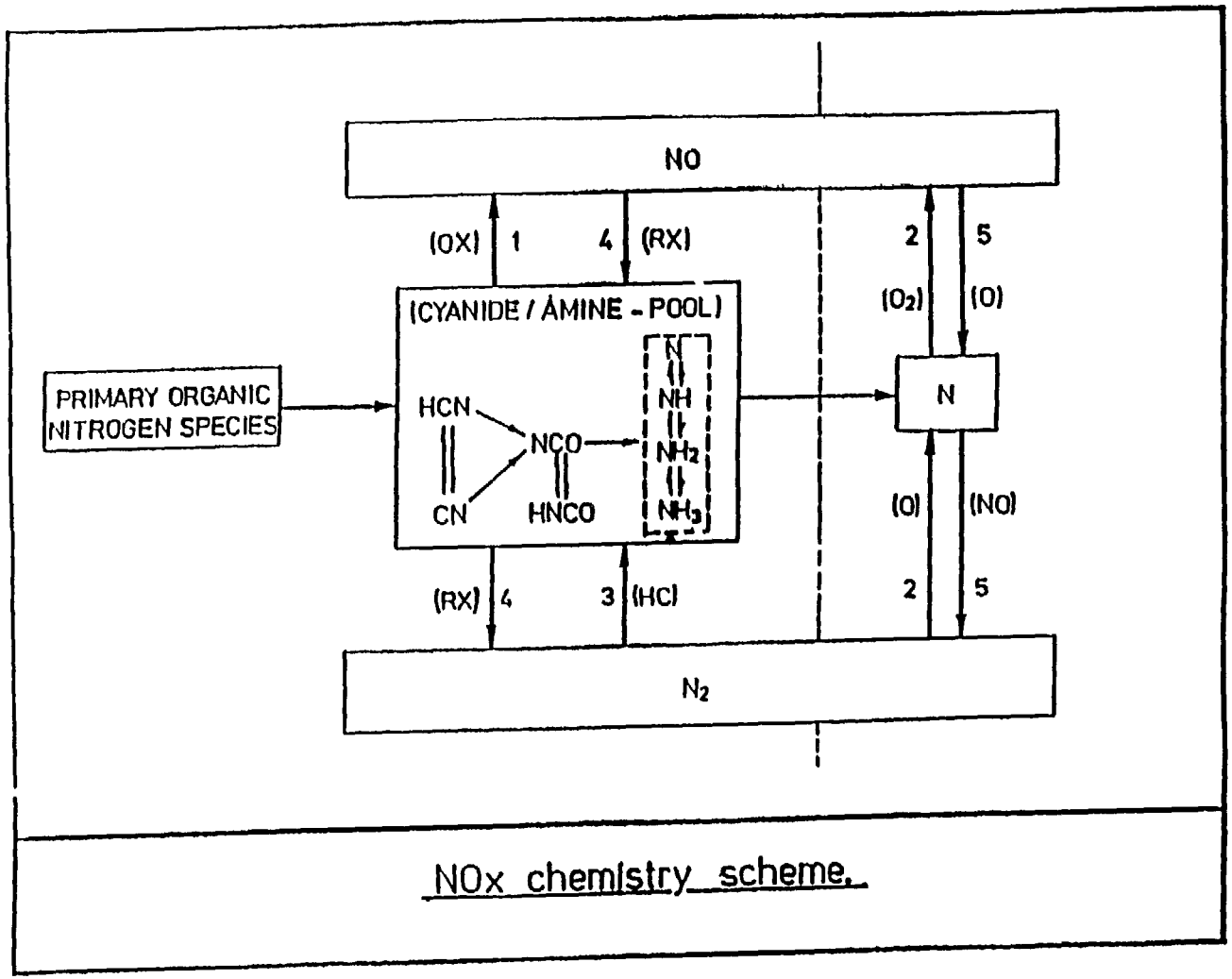

NOx chemistry scheme.

LOW NOx FIRING SYSTEM FOR WALL FIRED BOILERS

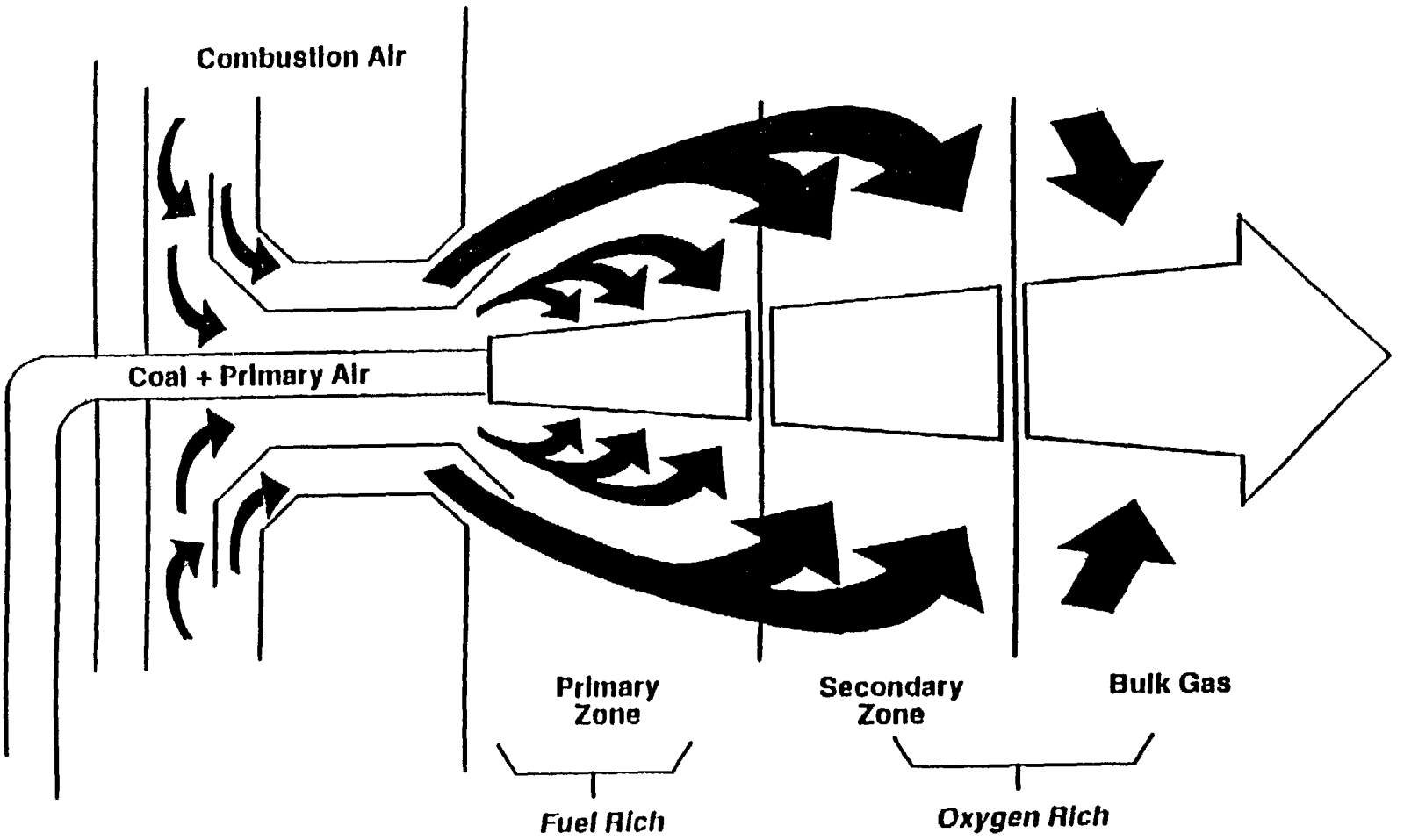

Exhibit 2 3-1

Exhibit 2 3-2

DRB-XCL® Burner Mechanical Design Features

Components	Features/Functions
1 2 Particle deflector and conical diffuser	Break up and redistribute the coal stream into a fuel rich ring near the nozzle wall
3 Linear actuator	Easily adjusts the secondary air sliding damper position for light-off full load and idle/cooling
4 Sliding air damper	Controls secondary air flow rate to the inner and outer air zones of the burner, independent of swirl
5 Pitot grid	Provides a relative indication of air flow with a 30 point impact/suction device to balance air flow among burners during commissioning
6 Fixed spin vanes for outer air zone	Improves peripheral air distribution within the burner and reduces pressure drop
7 Adjustable spin vanes for inner air zone	Stabilizes ignition at the tip of the coal nozzle
8 Adjustable spin vanes for outer air zone	Provides proper mixing of the secondary air to the end of the flame
9 Air separation plate	Diverts balance of secondary air to the end of the flame envelope to complete combustion
10 Flame stabilizing ring	Anchors the flame to the end of the coal nozzle and promotes stability and rapid fuel devolatilization
11 Burner support system	Allows for differential expansion
12 Sliding linkage	Heavy-duty, non-binding, lever arm movement to control inner and outer spin vane settings — position is optimized and fixed during commissioning

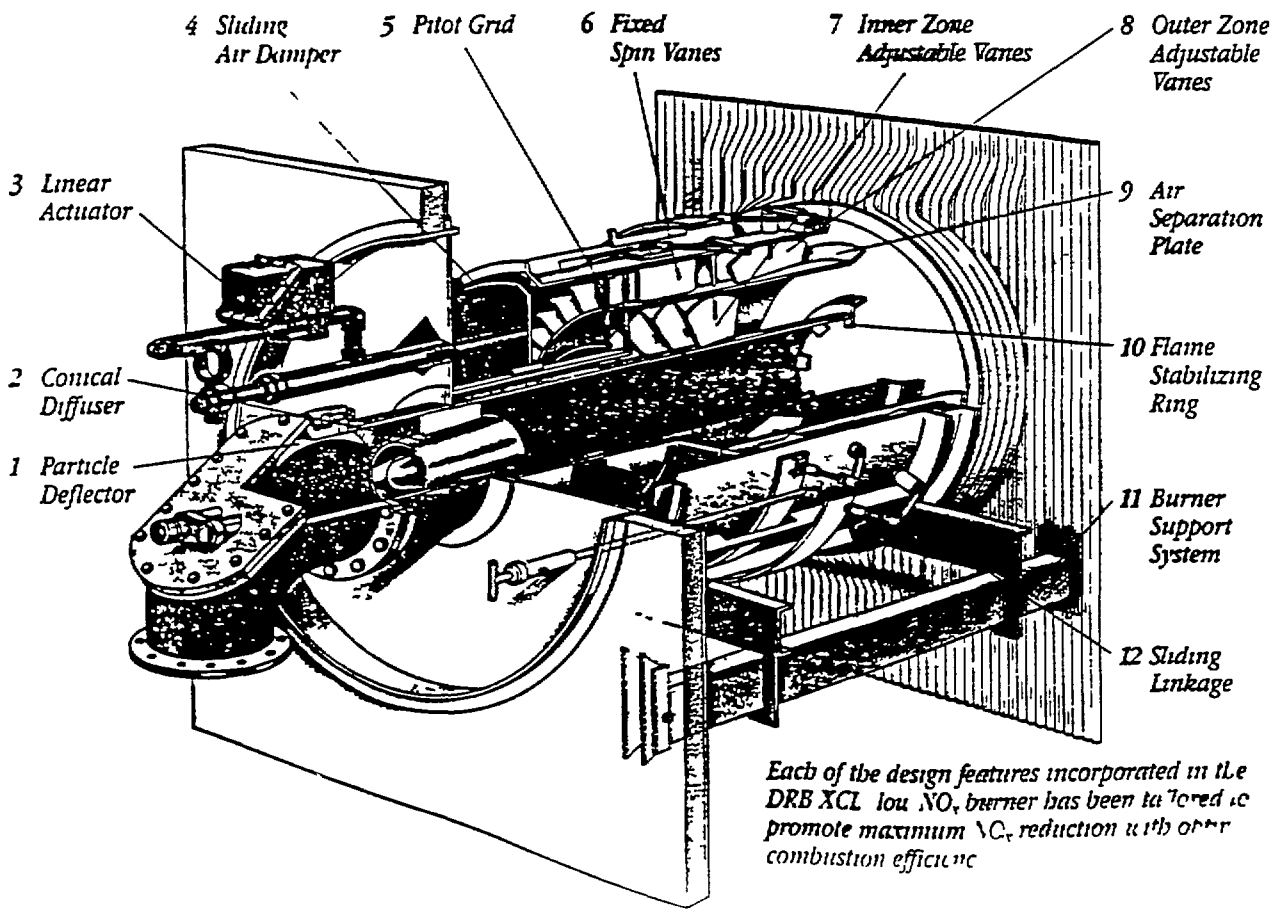

Each of the design features incorporated in the DRB XCL low NO_x burner has been tailored to promote maximum NO_x reduction with other combustion efficiency

Exhibit 2 3-2

DRB-XCL Burner for Pulverized Coal-Fired Applications

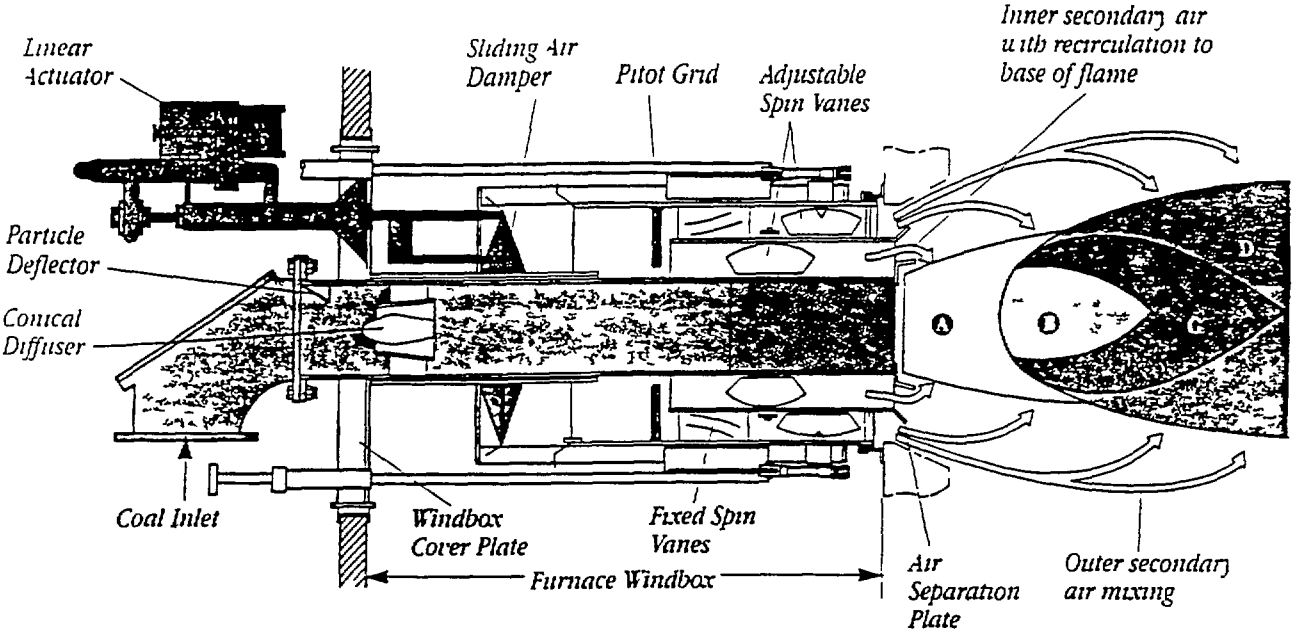

A High temperature — fuel rich devolatilization zone
B Production of reducing species zone
C NO_x decomposition zone
D Char oxidizing zone

The DRB XCL burner uses internal staging to promote rapid devolatilization in a sub-stoichiometric environment to reduce NO_x formation. As fuel particles move through the four reaction zones both NO_x reduction and combustion performance are optimized.

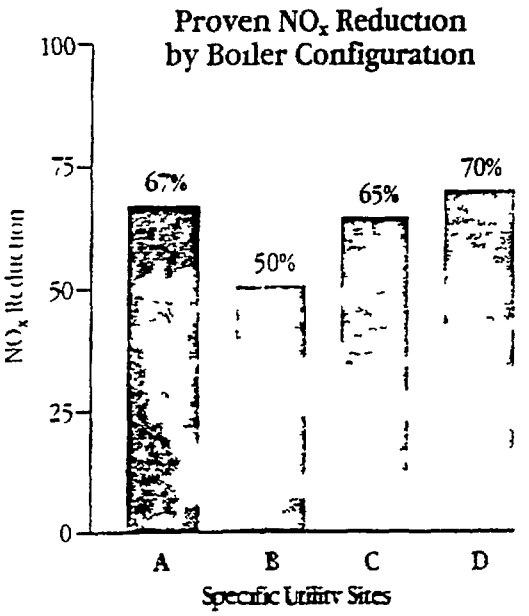

A Front wall fired no overfire air (OFA)
B Staggered opposed wall fired—no OFA
C Roof fired with underfire air
D Opposed wall fired with OFA

B&W's proven coal combustion technology can be designed to suit a wide variety of burner and furnace configurations while maximizing NO_x reduction.

The Value of Proven Experience

The DRB XCL internally staged low NO_x burner offers significant NO_x reduction capabilities across the full range of wall-fired boiler configurations and combustion firing patterns.

B&W's leadership in the field of low NO_x reduction technology began in 1962 with the first patented overfire air port system design. That leadership continues with unparalleled experience proven equipment and innovative technology. Our systems are designed to be cost-effective, dependable and adaptable to the full range of fuels and boiler arrangements in new or retrofit applications. Count on B&W for the NO_x emission control technology that works the first time, every time.

Exhibit 2 3-3

LOW NOx COMBUSTION TECHNOLOGIES.

Advanced Overfire Air

Generally, combustion NOx reduction techniques attempt to stage the introduction of oxygen into the furnace This staging reduces NOx production by creating a delay in fuel and air mixing which lowers combustion temperatures The staging also reduces the quantity of oxygen available to the fuel-bound nitrogen Typical overfire air (OFA) systems accomplish this staging by diverting 10 to 20 percent of the total combustion air to ports located above the primary combustion zone AOFA improves this concept by introducing the OFA through separate ductwork in greater quantities, with more control, and at higher pressures (Figure 2) The resulting system is capable of providing deep staging of the combustion process with accurate measurement of the AOFA airflow

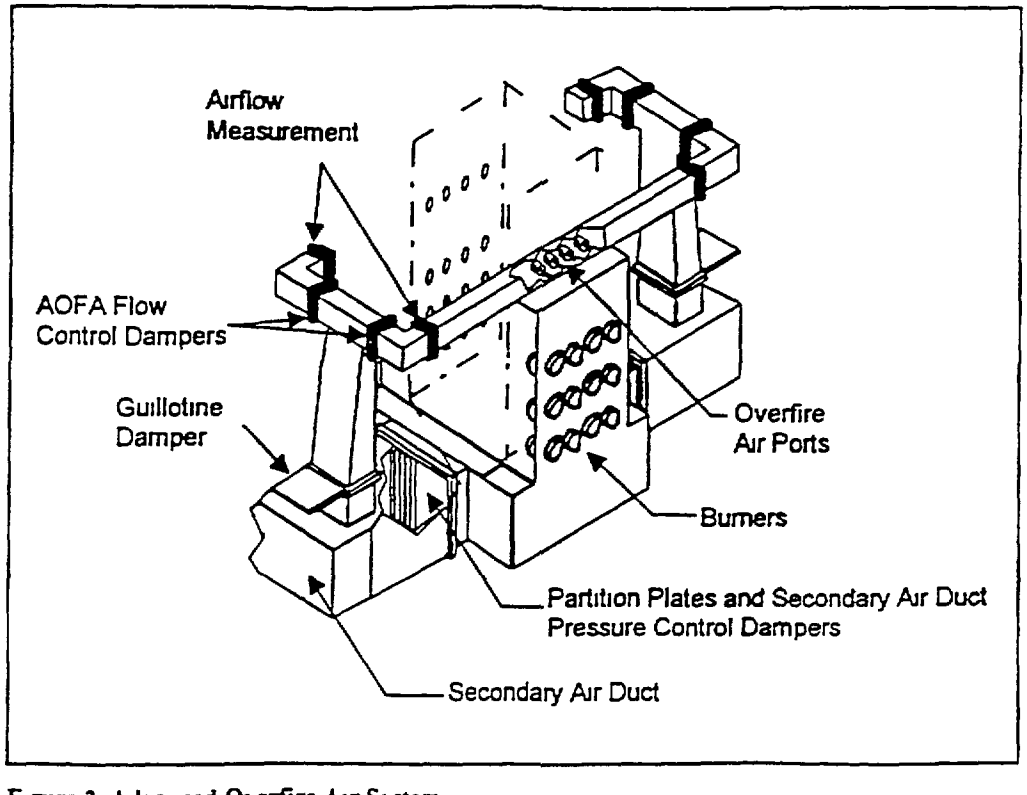

Figure 2 Advanced Overfire Air System

Exhibit 2 3-4

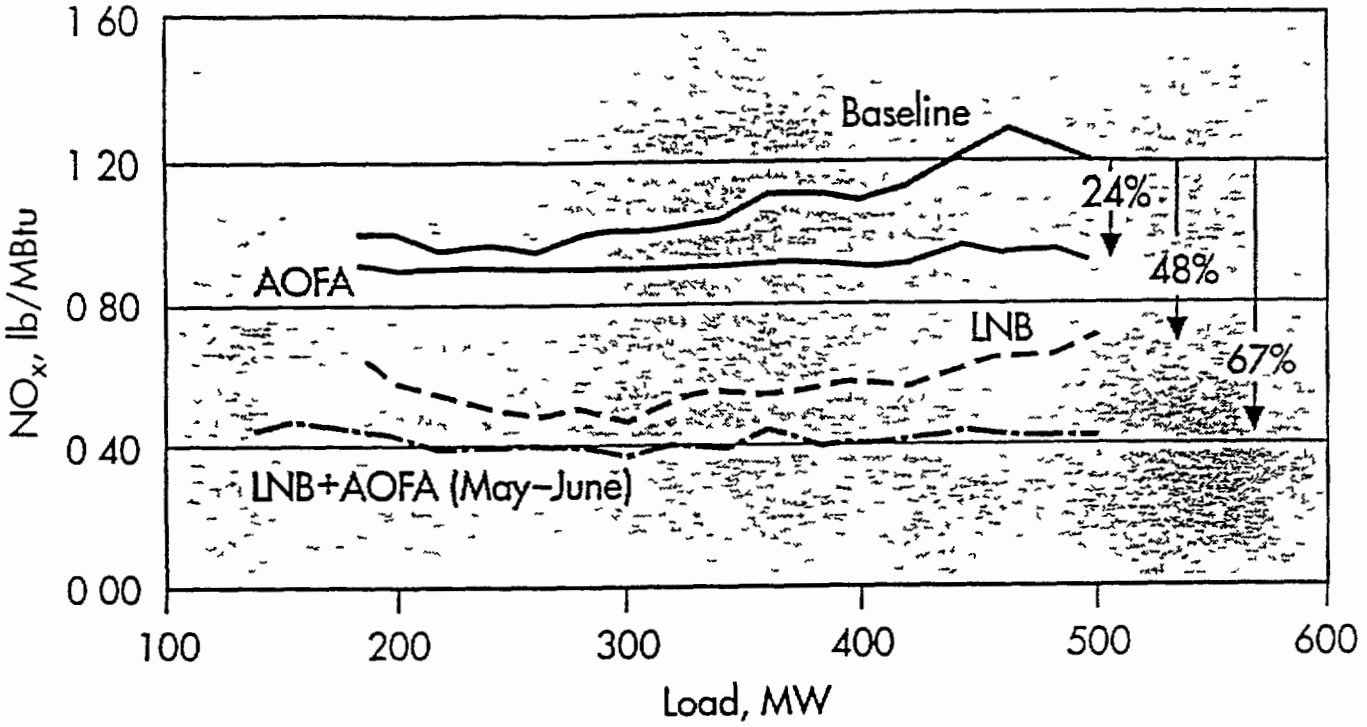

Comparison of the baseline, AOFA, LNB, and LNB + AOFA long-term NO_x emission data for Plant Hammond Unit 4

LOW NOx FIRING SYSTEM FOR TANGENTIALLY FIRED BOILERS

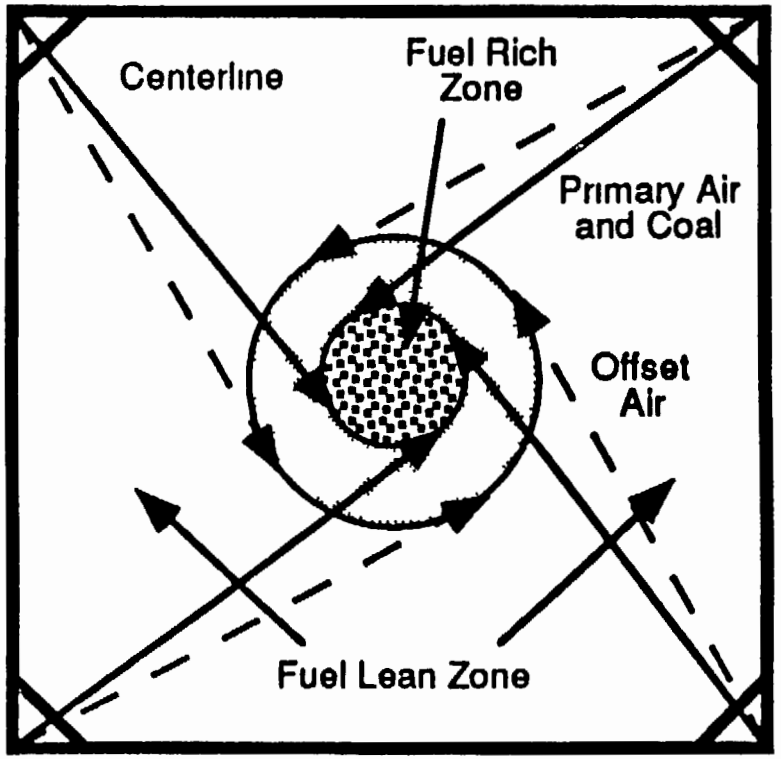

Concentric Firing Concept

Exhibit 2 3-5

Exhibit 2 3-6

OVERFIRE AIR CONFIGURATION FOR TANGENTIALLY FIRED BOILER

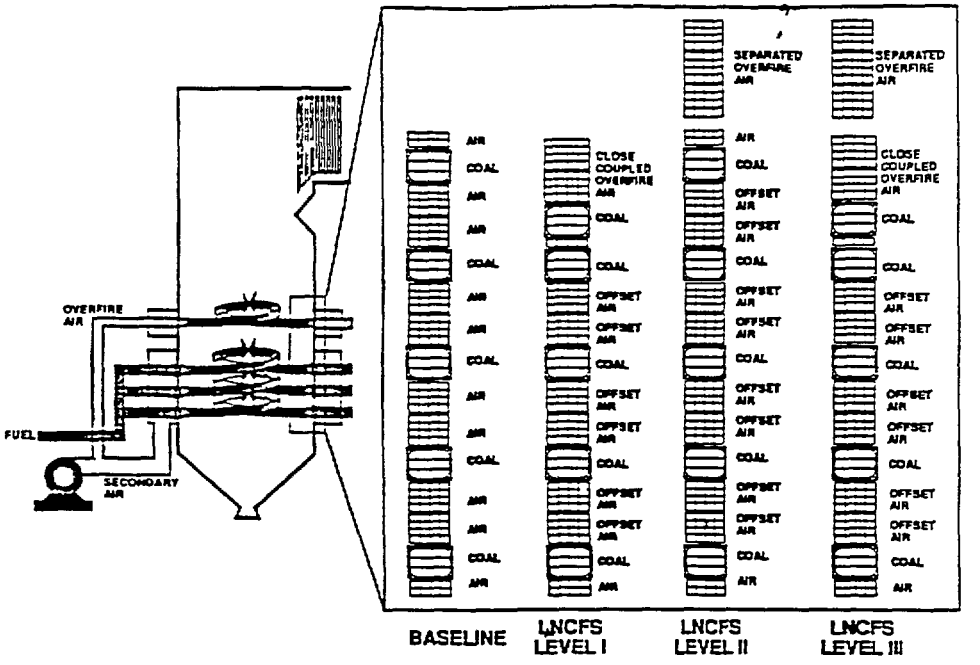

Standard Windbox	LNCFS Level 1	LNCFS Level 2	LNCFS Level 3
		OFA	OFA
		OFA	OFA
		---	---
AIR	OFA	AIR	OFA
COAL	OFA	COAL	OFA
AIR	COAL	CFS	COAL
COAL	COAL	COAL	COAL
AIR	CFS	CFS	CFS
COAL	COAL	COAL	COAL
AIR	CFS	CFS	CFS
COAL	COAL	COAL	COAL
OIL	OIL	OIL	OIL
COAL	COAL	COAL	COAL
AIR	AIR	AIR	AIR
% Reductions	25-32	33-40	41-50

Figure 21 Low NOx Retrofit Options

Exhibit 2 3-7

NO_x emissions compared for the original T-fired system at Gulf Power's Plant Smith in Lynn Haven, Florida and after the installation of LNCFS Level III technology

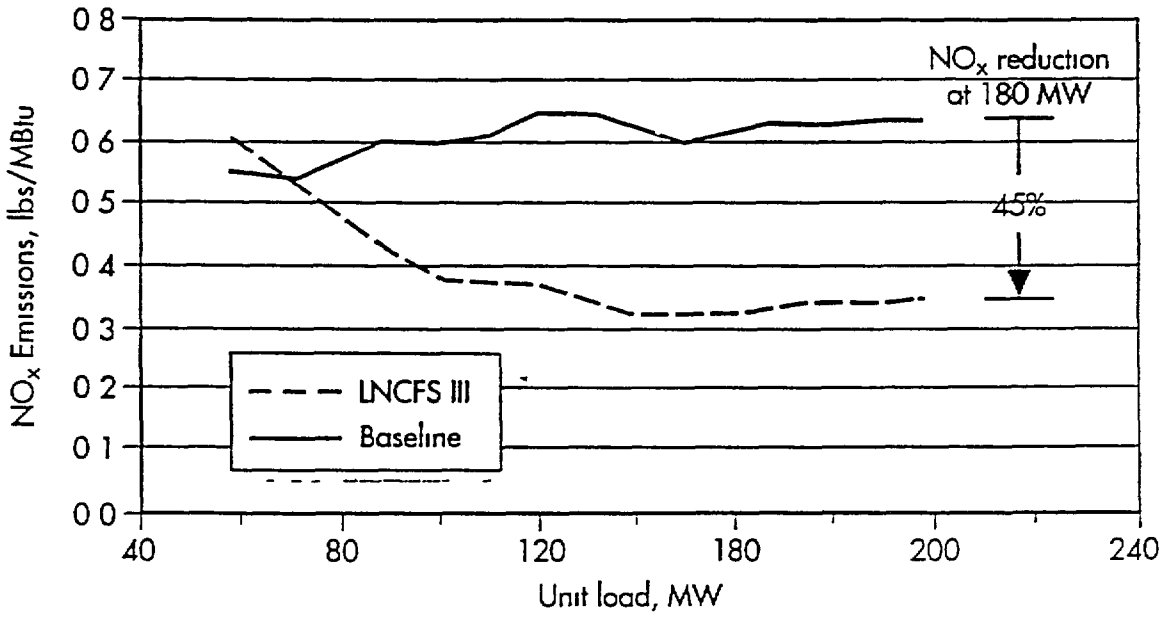

Exhibit 2 3-8

Reburning

- Gas reburn uses natural gas to chemically reduce NO_X emissions by injecting the gas into the boiler above the primary combustion zone
- The reburn gas input is typically 10 to 15% of total boiler input and NO_X reductions of over 60% have been demonstrated in long term testing
- Because the gas used for reburning displaces the primary coal fuel, it also results in reduced emissions of SO_2, CO_2, particulates and air toxics.
- Gas reburn can be used to reduce NO_X where simple conversion may not be effective and its economic attractiveness is less sensitive to gas price since it uses less gas.

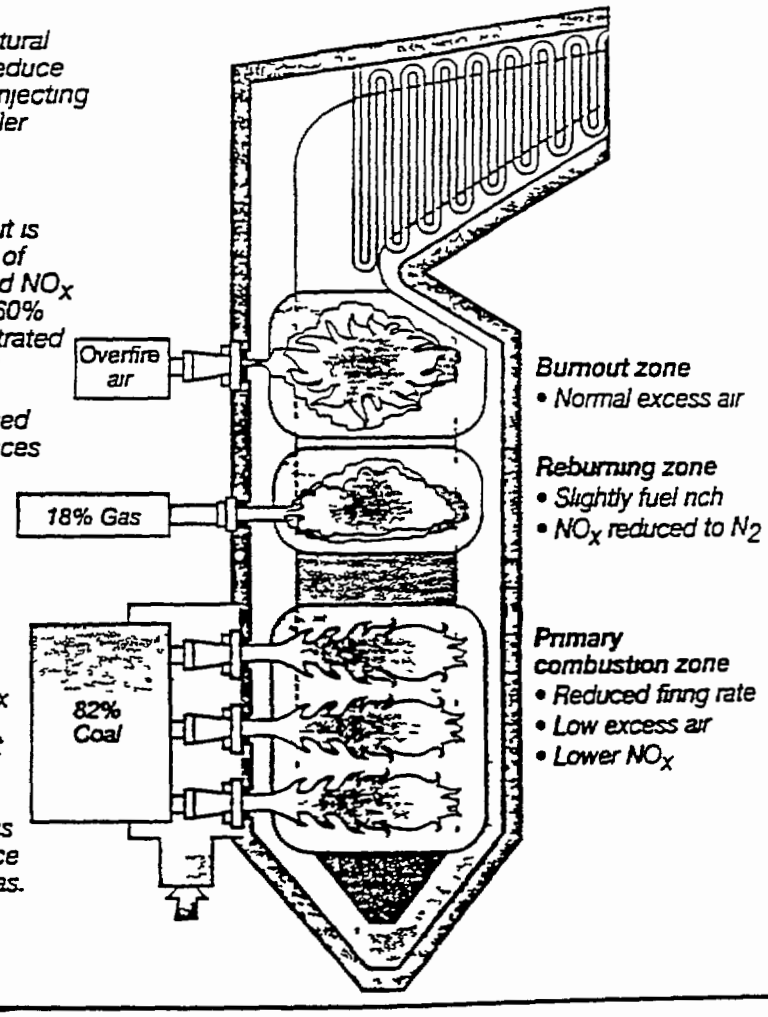

Figure 1. Gas reburning for NO_X control

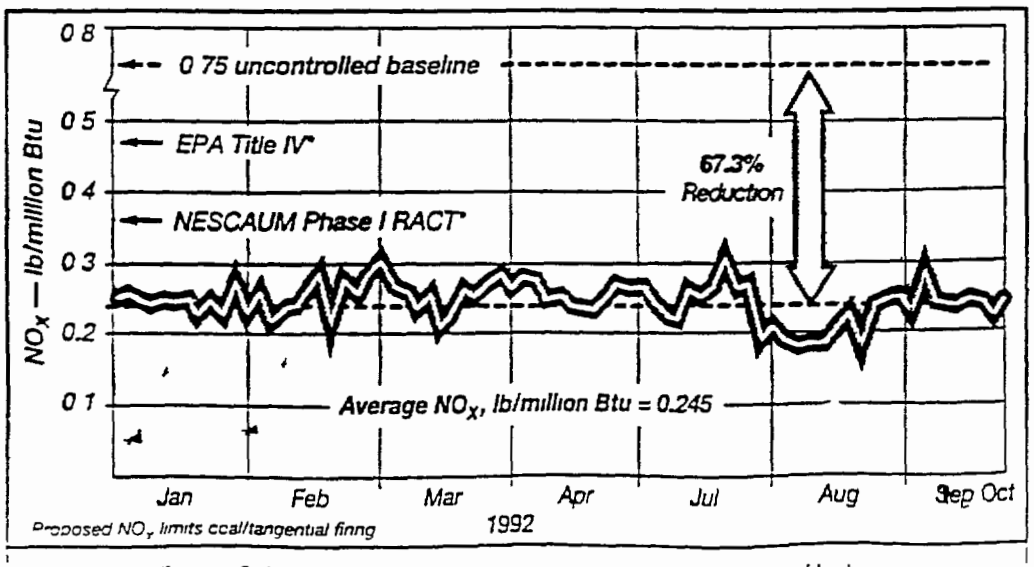

Figure 2. Long term gas reburning [illegible]

Exhibit 2 3-9

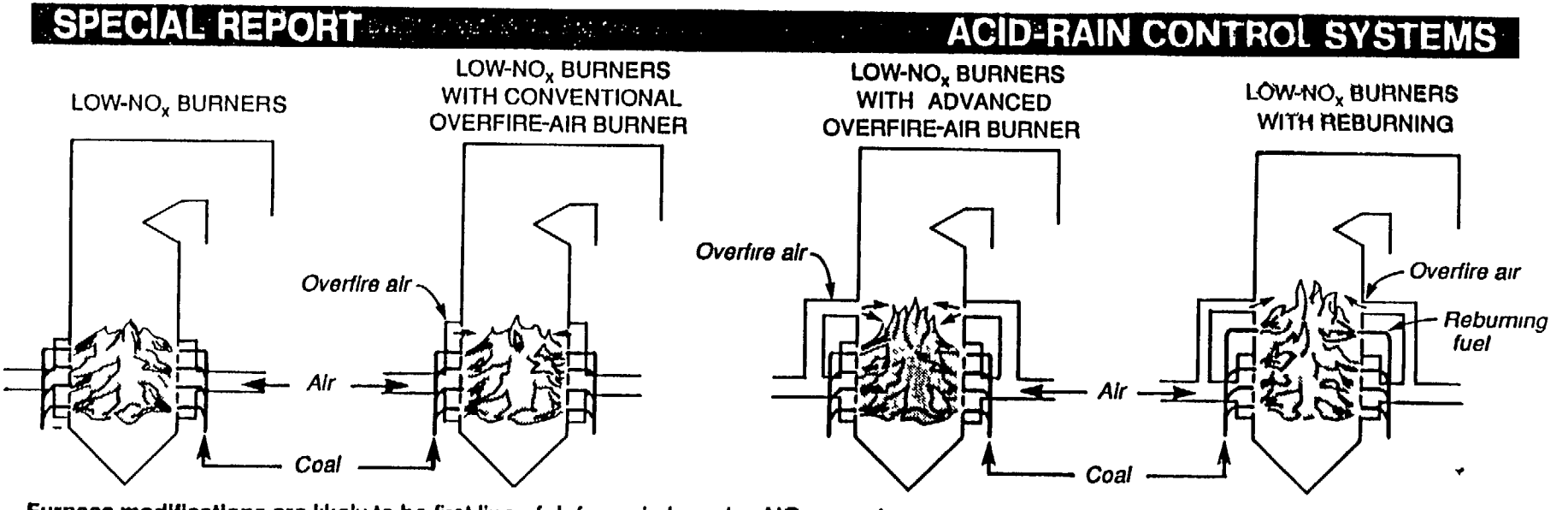

Furnace modifications are likely to be first line of defense in lowering NO_x emissions

COMBUSTION CONTROLS FOR COAL-FIRED UTILITY BOILERS

Technology	Percent NO_x Reduction and Controlled NO_x Levels (lb/MM Btu)[a]		Applicable Boiler Designs	Anticipated Equipment Modifications and System Upgrades
	Pre-NSPS Boilers	Post NSPS Boilers[b]		
OFA or advanced overfire air (AOFA)	15 30 (0 40 0 50) T (0 55 0 65) W	15 (0 50) W	Older tangential units; most wall fired units except slagging units	Installation of OFA ducting Installation of OFA ports and water wall panel modification. Addition of airflow dampers for improved distribution Installation of curtain air with some designs Installation of emission monitoring system and control for air dampers
Low NO_x Burner control often applied with close-coupled OFA especially for tangential units	30 55 (0 35 0 45) T (0 40 0 50) W	30-40 (0 35 0 40) T (0 35 0 40) W	Most tangential units, most wall fired units except slagging units	Install new burners and scanners Replace burner zone tubing panels Burner/pulverizer control system replacement Replace burner piping, hangers, valves Replace igniters and viewports Structure modifications and platforms Installation of air ports for blanket air and CEM system
AOFA + Low NO_x Burners	50-65 (0 25 0 30) T (0 25 0 40) W	40-55 (0 25 0 30) T (0 25 0 30) W	Some older wall fired boilers and most post NSPS tangential	All those cited above, plus replace tangential units or modify wall fired units windbox Replace combustion air control system Partial replacement of coal piping Fan and pulverizer modifications Install separate OFA ports
Reburning or fuel staging (requires OFA)	45-65 (0 40 0 70) C,S (0 25 0 35) T (0 3[illegible] 0 45) W	40-65 (0 20 0 35) W (0 20 0 35) T	All boilers, but technology primarily targeted for cyclone and wet bottom (slagging furnace) units	Install reburning burners and OFA ports Replace tube wall panels Piping ductwork to reburn burners and OFA ports Burner/combustion control system Gas fuel substation or oil and pump storage FGR ducting and fan may be required (site dependent), and continuous emission monitoring system

Source Reference 2

T = Tangential or corner fired W = Wall fired (front or opposed) C = Cyclone S = Slagging furnace

[a]Controlled levels are based on estimated reduction performance and weighted average baseline emissions of utility plants in the Northeast States for Coordinated Air Use Management (NESCAUM) region

[b]Only two boilers in the NESCAUM region are post NSPS design units Controlled emission levels are from the current baseline of 0 60 lb/MM Btu for the tangential fired unit and 0 58 lb/MM Btu for the wall fired unit

Exhibit 2 3-10

SECTION 2 EXHIBITS

Exhibit 2 1-1

Exhibit 2 2-1

Exhibit 2 3-1

Exhibit 2 3-2

Exhibit 2 3-3

Exhibit 2 3-4

Exhibit 2 3-5

Exhibit 2 3-6

Exhibit 2 3-7

Exhibit 2 3-8

Exhibit 2 3-9

Exhibit 2 3-10

Exhibit 2 3-11

Exhibit 2 4-1

Exhibit 2 4-2

Exhibit 2 4-3

Exhibit 2 4-4

Exhibit 2 4-5

Exhibit 2 4-6

Exhibit 2 4-7

Exhibit 2 4-8

Exhibit 2 5-1

Exhibit 2 4-1

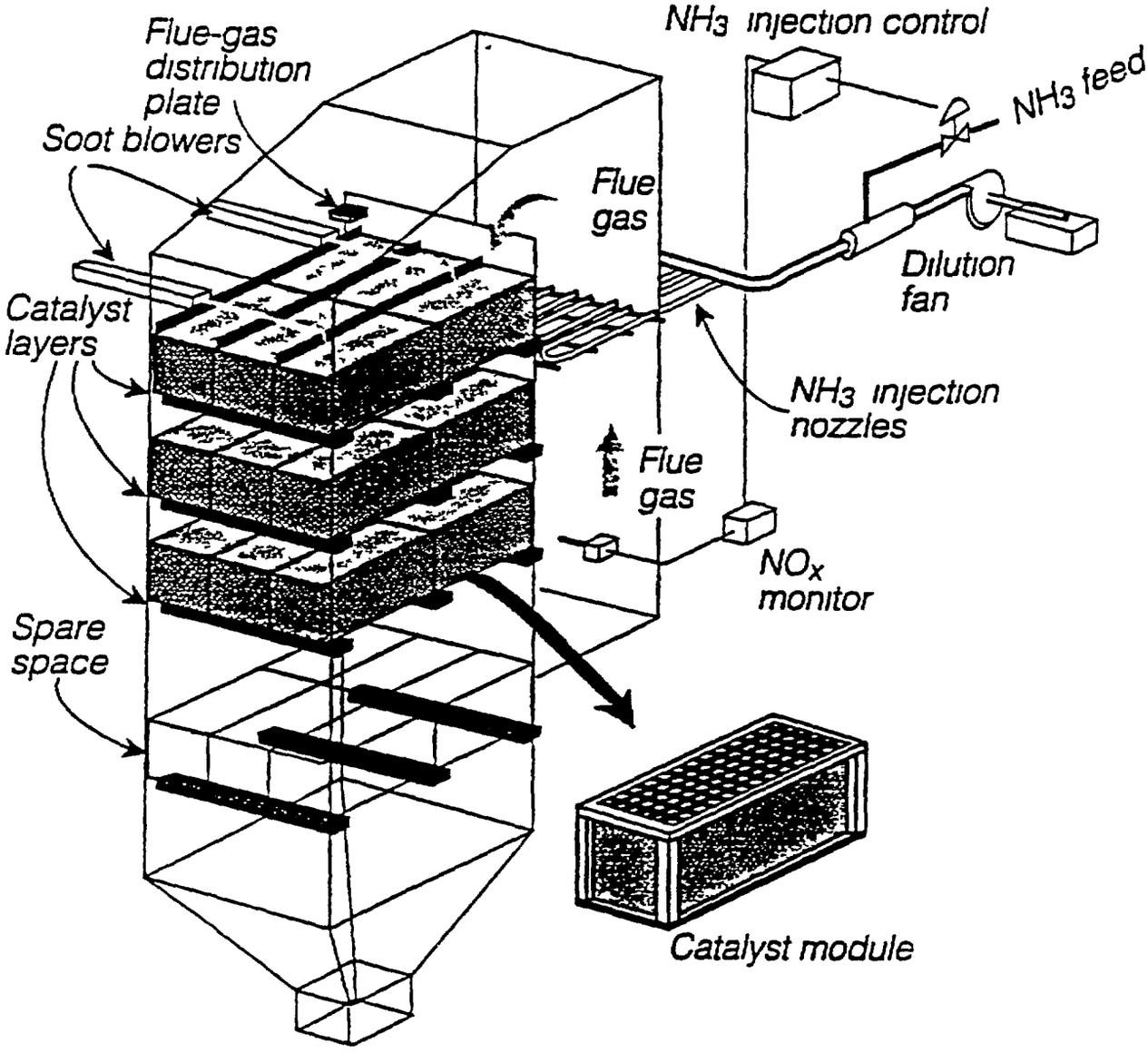
Flue-gas distribution plate
Soot blowers
Catalyst layers
Spare space
NH_3 injection control
NH_3 feed
Flue gas
Dilution fan
NH_3 injection nozzles
Flue gas
NO_x monitor
Catalyst module

Exhibit 2 4-2

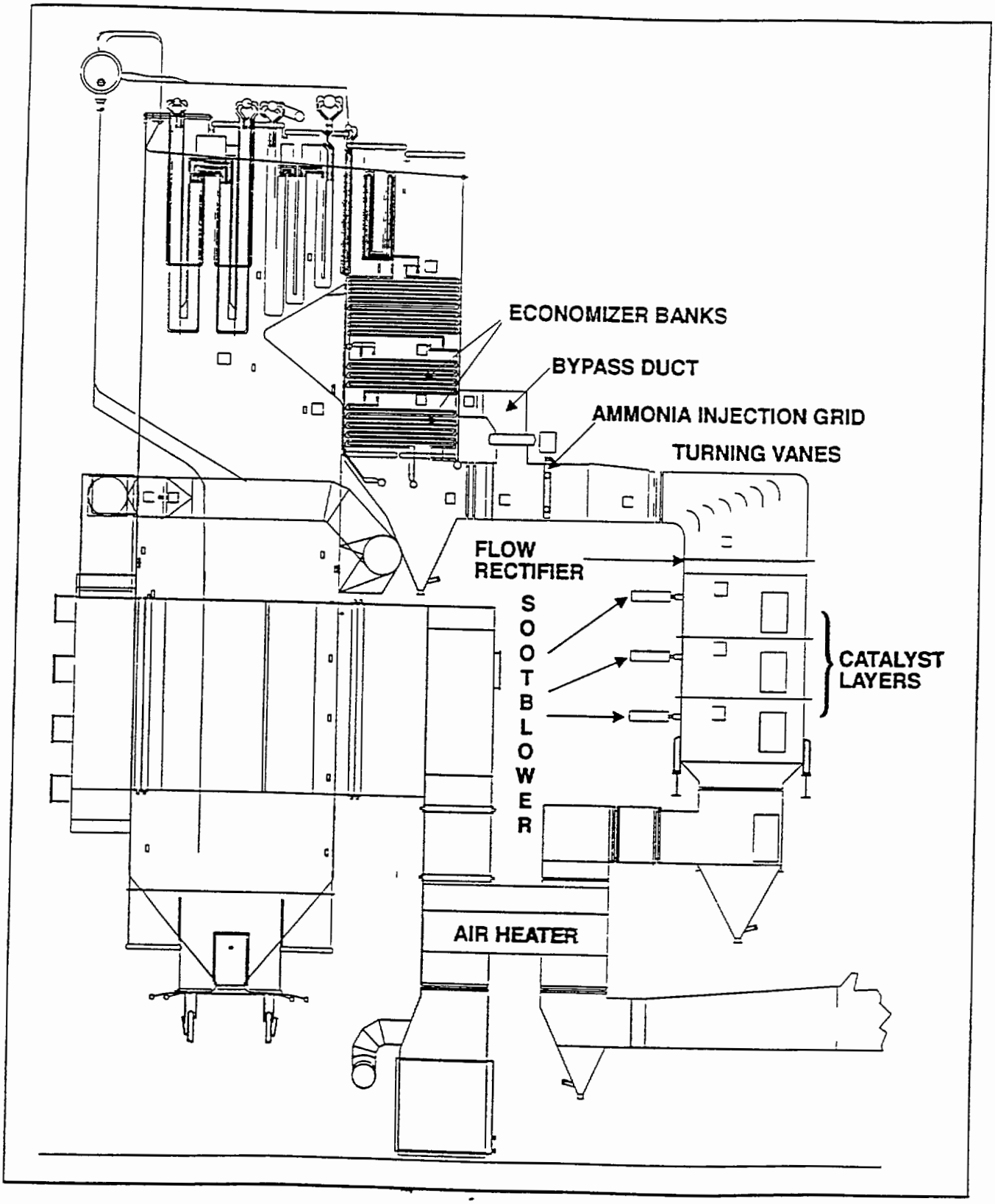

Steam Generator Overall Arrangement with SCR for Carneys Point Generating Plant

Exhibit 2 4-3

STEAG Plant High Dust SCR Costs				
	Station 1	Station 2	Station 3	Station 4
Plant Size, MW	750	710	450	500
Units	1	2	1	1
Commercial Operation Date	October 89	December 89	November 88	December 89
Annual Operating Hours, h/yr	8,000	6,000	7,500	7,500
Capacity Factor, percent	91	68	86	86
Cumulative Operation, h (through 1994)	40,000	60,000	45,000	37,500
Uncontrolled NO_x, ppm	390	410	250	219
Controlled NO_x, ppm	88	88	88	88
Percent Removal	78	79	65	60
Initial Capital Investment, $/kW	66	57	37	36
Annual Costs, $/ton levelized				
Ammonia ($220/ton)	113	113	113	113
Energy ($30/MWh)	74	58	103	92
Catalyst Replacement ($14,000/$m^3$)	62	57	114	86
Maintenance/Tuning	34	20	83	103
Total Levelized Annual Operating Cost	283	247	412	394
Fixed Charges on Capital Investment (15%)	636	666	693	839
Total Annual Cost, $/ton NO_x removed	918	913	1,105	1,232
Average Annual Cost, $/ton NO_x removed (All STEAG High Dust SCR-Equipped Units)	979			
Total Annual Costs, mills/kWh	1.79	1 96	1 17	1 06
Average Annual Cost, mills/kWh (All STEAG High Dust SCR-Equipped Units)	1 64			

SELECTIVE NON-CATALYTIC REDUCTION (SNCR) FOR CONTROLLING NO_x EMISSIONS

1 What is SNCR?

Selective Non-Catalytic Reduction (SNCR) is a chemical process that changes oxides of nitrogen (NO_x) into molecular nitrogen (N_2) A reducing agent, typically ammonia or urea, is injected into the combustion/process gases. At suitably high temperatures (1,600 - 2,100 °F)[1], the desired chemical reactions occur Other chemicals can also be added to improve performance, reduce equipment maintenance, and expand the temperature window within which SNCR is effective.

Conceptually, the SNCR process is quite simple A gaseous or aqueous reagent of a selected nitrogenous compound is injected into, and mixed with, the hot flue gas in the proper temperature range The reagent then, without a catalyst, reacts with the NO_x in the gas stream, converting it to harmless nitrogen gas and water vapor SNCR is "selective" in that the reagent reacts primarily with NO_x and not with oxygen or other major components of the flue gas. A schematic depicting the SNCR process in a stoker-fired combustor is shown in Figure 1[2]

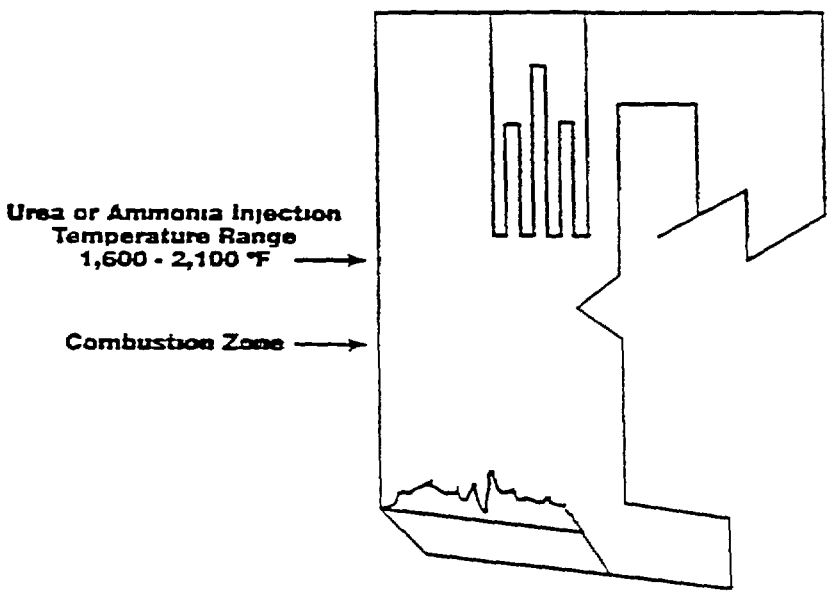

Figure 1

No solid or liquid wastes are created in the SNCR process

In almost all commercial SNCR systems either ammonia or urea is used as the reagent. Other reagents such as cyanuric acid and hydrazine have also been used. Ammonia may be injected in either anhydrous or aqueous form, and urea, as an aqueous solution.

The principal components of an SNCR system are a reagent storage and injection system which includes tanks, pumps, injectors, and associated controls, and often NO_x continuous emissions monitors. Given the simplicity of these components, installation of SNCR is easy relative to the installation of other NO_x control technologies. SNCR retrofits typically do not require extended source shutdowns.

2. How much NO_x can SNCR remove?
While SNCR performance is specific to each unique application, NO_x reduction levels ranging from 30% to over 75% have been reported.

Temperature, residence time, reagent injection rate, reagent-flue gas mixing, and uncontrolled NO_x level are important in determining the effectiveness of SNCR.[3] In general, if NO_x and reagent are in contact at the proper temperature for a long enough time, then SNCR will be successful at reducing the NO_x level.

SNCR will remove the most NO_x within a specified temperature range or window. A typical removal effectiveness curve as a function of temperature within this window is shown in Figure 2. At temperatures below the window, reaction rates are extremely low, so that little or no NO_x reduction occurs. On the left side of the curve, the extent of NO_x removal increases with increasing temperature because reaction rates increase with temperature. Residence time typically limits the NO_x reduction in this range. At the plateau, reaction rates are optimal for NO_x reduction. A temperature variation in this range will have only a small effect on NO_x reduction.

A further increase in temperature beyond the plateau decreases NO_x reduction. On the right side of the curve, the oxidation of reagent becomes a significant path and competes with the NO_x reduction reactions for the reagent. A further increase in temperature beyond the right side can actually increase the level of NO_x. Although the reduction is less than the optimum, operation on the right side is practiced and recommended to minimize reaction times and byproduct emissions.

The temperature window becomes wider as the residence time increases, thus improving the removal characteristics of the process. Long residence times (>0.5 second) at optimum temperatures promote relatively high NO_x reduction performance even with less than optimum mixing or temperatures.

Normal stoichiometric ratio (NSR) is the term used to describe the N/NO molar ratio of the reagent injected to uncontrolled NO_x concentrations. If one mole of anhydrous

Exhibit 2.4-4

Exhibit 2 4-4

Typical SNCR Temperature Window

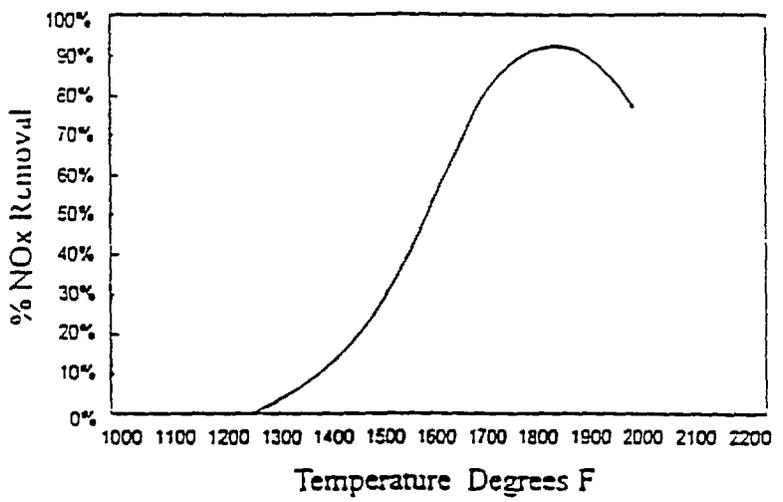

Figure 2

ammonia is injected for each mole of NO_x in the flue gas, the NSR is one, as one mole of ammonia will react with one mole of NO_x. If one mole of urea is injected into the flue gas for each mole of NO_x, the NSR is two. This is because one mole of urea will react with two moles of NO_x. For both reagents, the higher the NSR, the greater the level of NO_x reduction.[4] Increasing NSR beyond a certain point, however, will have a diminishing effect on NO_x reduction, with reagent utilization decreasing beyond this point.

Exhibit 2 4-5

500 MW Retrofit SNCR, Hybrid, and SCR Cost Comparison--Full Year Operation				
	SNCR--Low NH_3 Slip	NCR--High NH_3 Slip	SNCR/Catalyst Hybrid	SCR System
Parameter				
Uncontrolled NO_x Emission, lb/MBtu	0 50	0 50	0 50	0 50
SNCR NO_x Reduction Efficiency, %	25	37 5	30	NA
Catalyst NO_x Reduction Efficiency, %	NA	NA	57	90
Overall NO_x Reduction Efficiency, %	25	37 5	70	90
NO_x Outlet Emission, lb/MBtu	0 375	0 3125	0 15	0 05
Design Ammonia Slip Emission, ppm	5	20	5	5
Annual Operation, months per year	12	12	12	12
Reagent Stoichiometric Ratio				
mol N/mol NO_x in	0 71	1 2	1 75	0 95
mol N/mol NO_x removed	2 8	3 3	2 5	1 05
Reagent Utilization, percent	35	30	40	95
1995 Capital Cost, $/kW	14	15	43	57
1995 Levelized Annual , $/ton NO_x removed				
Reagent ($0 88/gal urea, $250/ton ammonia)	906	1,062	797	128
Energy (30 $/MWh)	85	87	67	46
Catalyst Replacement ($14,000/m^3)	0	0	75	98
Maintenance/Tuning	109	73	39	14
Total Levelized Annual Operating Costs, $/ton NO_x removed	1,100	1,221	977	287
Fixed Charges on Capital Investment (15%), $/ton NO_x removed	536	394	590	615
1995 Total NO_x Reduction Cost, $/ton NO_x removed	1,636	1,616	1,567	-902

Cost Notes

1 Capital costs include 25 percent contingency, 4 percent escalation, 15 percent indirects, and 10 percent interest during construction

2 Levelized annual costs are based on a 20 year life, a 75 percent capacity factor, a 4 percent escalation rate, and a 10 percent present worth discount rate

PSE&G MERCER IN-DUCT SCR/SNCR PROJECT

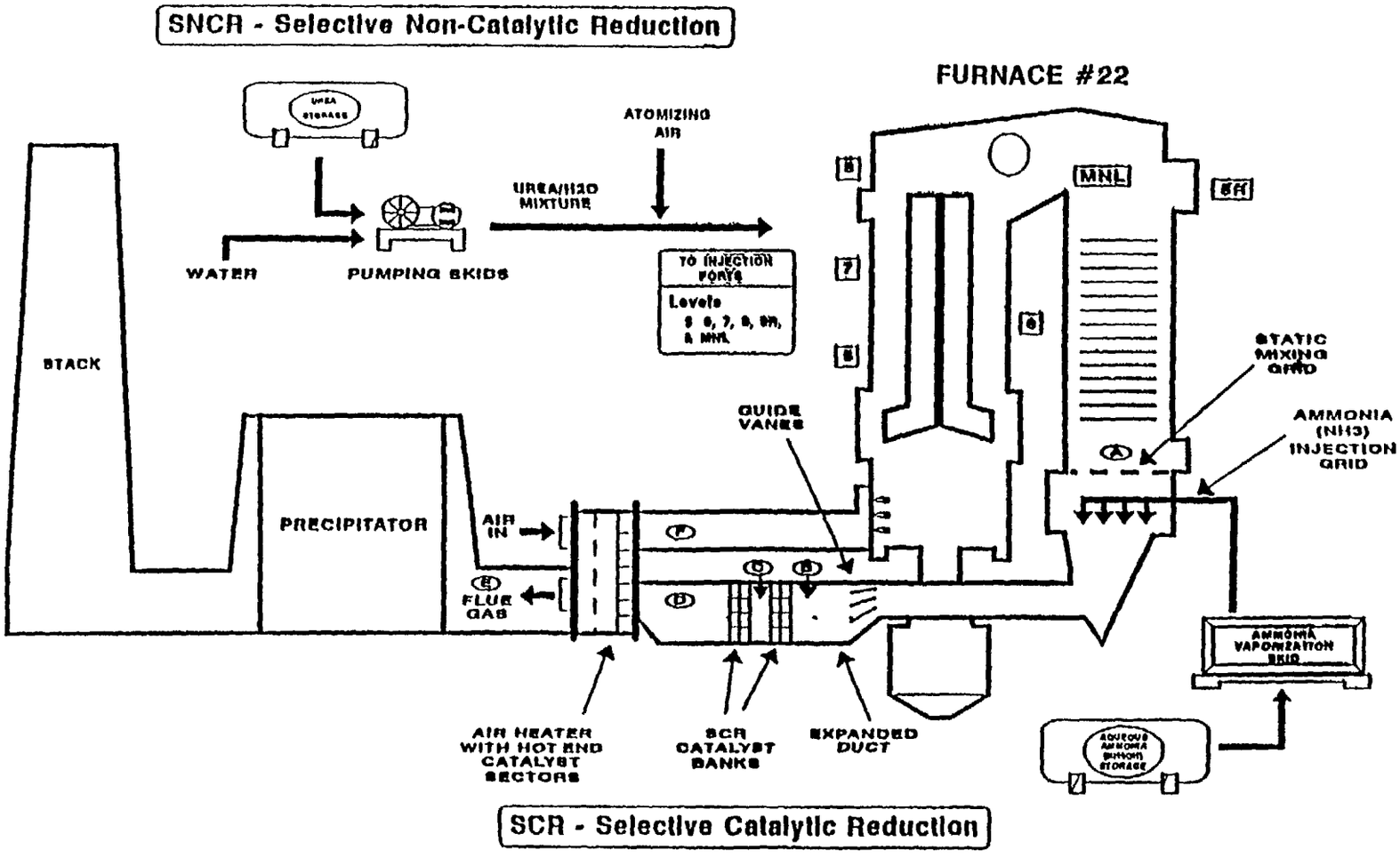

Exhibit 2 4-6

PSE&G Mercer In-Duct SCR System and SNCR Test Locations

Exhibit 2 4-7

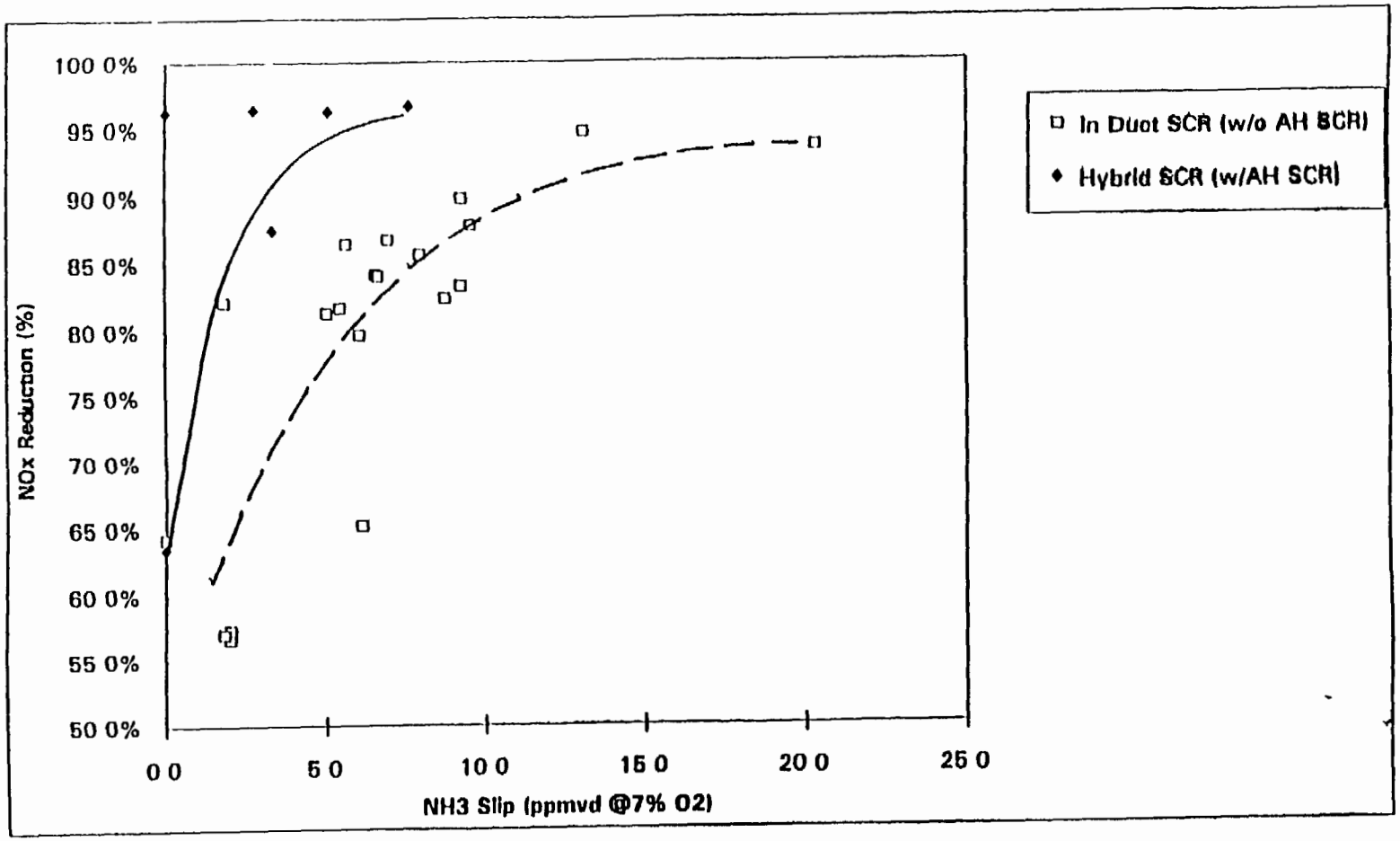

PSE&G Mercer Unit 2
Performance of In-duct SCR and Hybrid SCR as a Function of NH_3 Slip
Coal Firing 320 MW

Performance Projections

Exhibit 2 4-8

Case	Efficiency (%) In Duct	In Duct Air Heater	Improvemnt Over In Duct SCR	NH_3 Slip (ppm)
A (Gas)	65	78	20	10
B (Coal)	61	74	21	5
C (Gas)	45	60	33	20

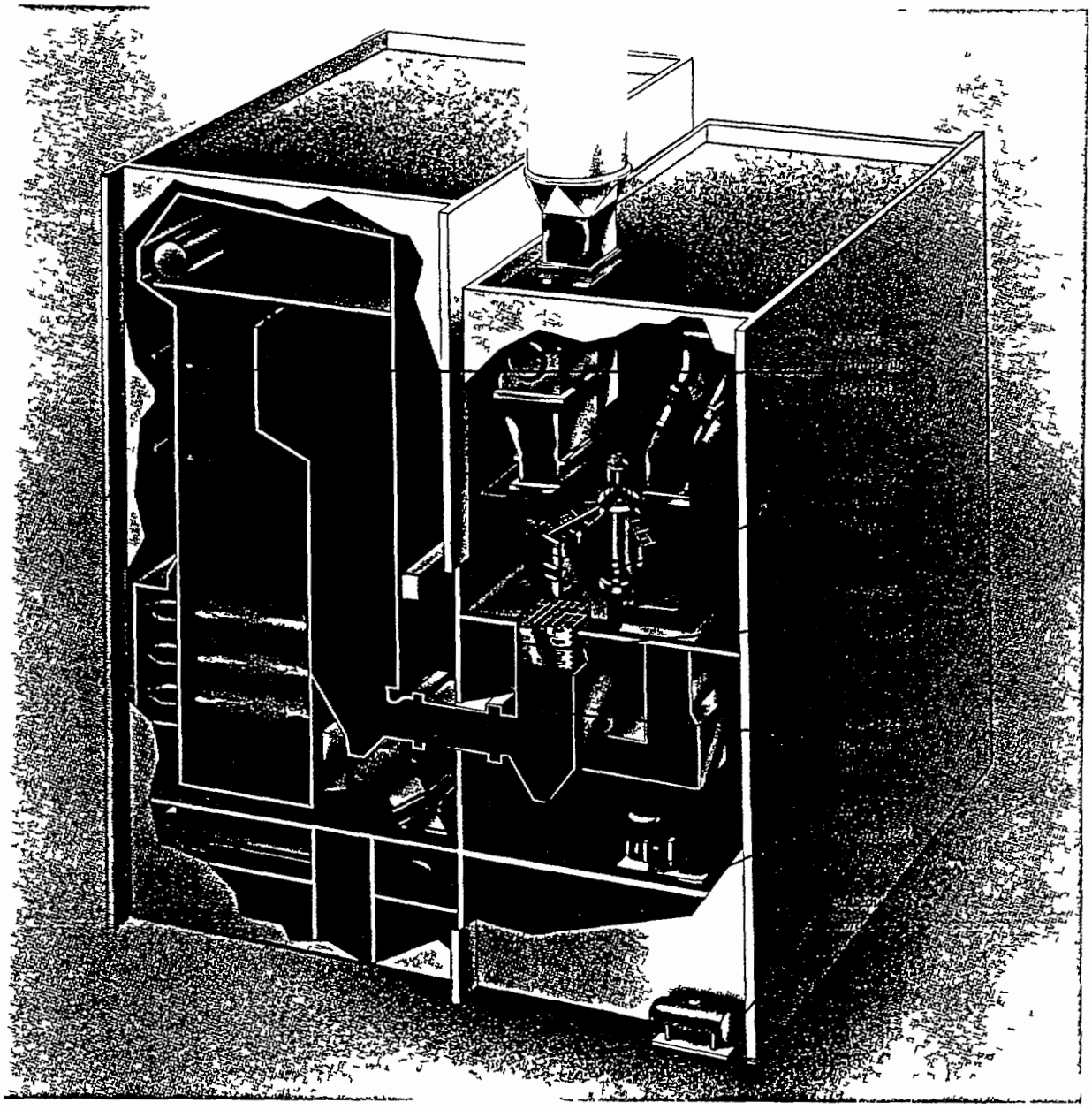

Staged NO Reduction System profile on a typical gas/oil fired boiler

BEST AVAILABLE COPY

NITROGEN OXIDES

General Description

Nitrogen oxides (NO_x) in the ambient air primarily consist of nitric oxide (NO) and nitrogen dioxide (NO_2) These two forms of gaseous nitrogen oxides are significant pollutants of the lower atmosphere At the point of discharge from man-made sources nitric oxide is the predominant form of nitrogen oxides Nitric oxide is a colorless and tasteless gas It is readily converted to nitrogen dioxide a much more harmful form of nitrogen oxide, by chemical reactions with ozone present in the atmosphere Nitrogen dioxide is a yellowish orange to reddish brown gas with a pungent, irritating odor and it is a strong oxidant A portion of nitrogen dioxide in the atmosphere is converted to nitric acid (HNO_3) and ammonium salts Nitrate aerosol (acid aerosol) is removed from the atmosphere through wet or dry deposition processes similar to those which remove sulfate aerosol

Major Sources

Only about 10 percent of all NO_x emissions come from man-made sources (Godish, 1991) The rest is produced naturally by anaerobic biological processes in soil and water by lightning and volcanic activities and by photochemical destruction of nitrogen compounds in the upper atmosphere About 50 percent of emissions from man-made sources come from fossil-fuel fired heat and electricity generating plants and slightly less from motor vehicles Other sources include industrial boilers, incinerators, the manufacture of nitric acid and other nitrogenous chemicals electric arc welding processes the use of explosives in mining, and farm silos

Worldwide annual emissions of NO_x are estimated to be approximately 50 million tons (World Resources Institute 1994) The United States generate about 20 million metric tons of nitrogen oxides per year about 40 percent of which is emitted from mobile sources Of the 11-12 million metric tons of nitrogen oxides that originate from stationary sources about 30 percent is the result of fuel combustion in large industrial furnaces and 70 percent is from electric utility furnaces (Cooper and Alley, 1986)

Occurrence in Air and Routes of Exposure

Annual mean concentrations of nitrogen dioxide in urban areas throughout the world range 20-90 micrograms per cubic meter ($\mu g/m^3$) Maximum 1/2-hour values and maximum 24-hour values of nitrogen dioxide can approach 850 $\mu g/m^3$ and 400 $\mu g/m^3$ respectively Hourly averages near very busy roads often exceed 1 000 micrograms per cubic meter Urban outdoor levels of nitrogen dioxide vary according to time of day season, and meteorological conditions Typically urban concentrations peak during the morning and afternoon rush hours Levels are also higher in winter than other seasons because of the increased use of heating fuels Finally since the conversion of nitrogen dioxide from nitric oxide depends on solar intensity concentrations are often greater on warm sunny days Nitrogen oxides decay rapidly as polluted air moves away from the source Concentrations of nitrogen oxides in rural areas without major sources are typically close to background levels However nitrogen oxides can travel long distances in the upper atmosphere contributing to elevated ozone levels and acidic depositions far from sources of emissions

Concentrations of nitrogen dioxide in homes may considerably exceed outdoor levels and therefore be more important for human health Large sources of indoor nitrogen dioxide include cigarette smoke and gas-fired appliances and space heaters Nitrogen dioxide concentrations in kitchens with unvented gas appliances can exceed 200 $\mu g/m^3$ over a period of several days Maximum 1-hour concentrations during cooking may reach 500 1 900 $\mu g/m^3$ and 1 000-2 000 $\mu g/m^3$ where there is also a gas-fired water heater in use Smoke from one cigarette may contain 150 000-225 000 $\mu g/m^3$ of nitric oxide and somewhat less nitrogen dioxide

Health and Environmental Impacts

Health Epidemiological studies have rarely detected effects on children or adults from exposure to outdoor nitrogen dioxide One study of nurses in Los Angeles found an association between exposure to nitrogen dioxide and increased phlegm production (Schwartz and Zegler 1990) Studies have indicated that the use of gas appliances for cooking may have a very small effect on the human respiratory system especially for small children but that the effect (if it exists) disappears as the children grow older (WHO 1987)

Available data from animal toxicological experiments rarely indicate effects of acute exposure to nitrogen dioxide concentrations of less than 1 880 $\mu g/m^3$ (WHO, 1987) Asthmatics are likely to be the most sensitive group to exposure to nitrogen oxides Two laboratories have reported reversible effects on pulmonary function of asthmatics exercising intermittently after 30 minutes of exposure to nitrogen dioxide concentrations as low as 560 $\mu g/m^3$ (WHO, 1987) However the health impact of the change in pulmonary function is unclear; the change of about 10 percent is within the range of physiological variation and is not necessarily adverse At levels above 3,760 $\mu g/m^3$, normal subjects have demonstrated substantial changes in pulmonary function (WHO, 1987)

Studies with animals have found that several weeks to months of exposure to nitrogen dioxide concentrations less than 1 880 $\mu g/m^3$ causes both reversible and irreversible lung effects and biochemical changes Animals exposed to nitrogen dioxide levels as low as 940 micrograms per cubic meter for 6 months may experience destruction of cilia, alveolar tissue disruption, obstruction of the respiratory bronchioles, and increased susceptibility to bacterial infection of the lungs (WHO, 1987) Rats and rabbits exposed to higher levels experience more severe tissue damage, resembling emphysema.

The available data suggest that physiological effects of nitrogen dioxide on humans and animals are due more to peak concentrations than to duration or to total dose

Materials. Nitrogen dioxide in reaction to textile dyes, can cause fading or yellowing of fabrics Exposure to nitrogen dioxide can also weaken fabrics or reduce their affinity for certain dyes Industry has devoted considerable resources to develop textiles and dyes resistant to nitrogen oxide exposure (Canada's Federal-Provincial Advisory Committee on Air Quality, 1987)

Ecosystem and Other Effects Nitrogen oxides are precursors both to acid precipitation and to ozone, each of which is blamed for injury to plants While nitric acid is responsible for only about 30-35 percent of hydrogen (H^+) ion concentration in wet and dry acid depositions, the contribution of nitrogen oxide emissions to acid deposition is greater than these numbers indicate It is nitrogen oxide that absorbs sunlight initiating the photochemical processes that produce nitric acid

The extent and severity of the damage due to acid depositions has not been estimated since impacts vary according to the soil type plant species atmospheric conditions insect populations and other factors that are not well understood Nitrates in precipitation may actually increase forest growth in areas with nitrogen deficient soils However the fertilizing effect of nitrates (and sulfates) may be counterbalanced by the leaching of potassium magnesium calcium and other nutrients from forest soils There is little evidence that agricultural crops are being injured by exposures to nitrates in precipitation. The amount of nitrates in rain water is almost always well below the levels applied as fertilizer (NAPAP, 1990)

The most evident damage due to acid depositions is to fresh water lake and stream ecosystems Acid depositions can lower the pH of the water with potentially serious consequences for fish, animal and plant life Lakes in areas with soils containing little calcium or magnesium carbonates which could help neutralize acidified rain are especially at risk Few fish species can survive the sudden shifts in pH (and effects of soluble substances) resulting from atmospheric depositions and runoff of contaminated waters such that affected lakes may become completely devoid of fish life Acidification also decreases the species variety and abundance of other animal and plant life Acid pulses have been associated with the fish kills observed in sensitive watersheds during the spring meltdown of snowpack Further the atmospheric deposition of nitrogen oxides is a substantial source of nutrients that damage estuaries by causing algae blooms and anoxic conditions (U S Environmental Protection Agency 1992)

Emissions of nitrogen oxides act as a precursor to ground-level ozone (O_3) which is potentially a more serious problem Plant scientists blame tropospheric ozone for 90 percent of the vegetation injury in North America Ozone can travel long distances from the source and contribute to elevated ozone concentrations even in rural areas Since the meteorological and climatic conditions that favor the production of ozone--abundant sunshine--

are also good for agriculture, ozone has the potential to cause large economic losses from reductions in crop yields

Nitrogen dioxide affects visibility by absorbing short-wavelength blue light Since only the longer wavelengths of light are visible to the eye its color appears yellowish to reddish brown. Nitrogen oxides can also combine with photochemical oxidants to form smog

Ambient Standards and Guidelines
The main goal of almost all the major national and international air quality standards and guidelines produced over the last two decades has been to protect human health. Some countries have also produced guidelines and standards for nitrogen oxides to protect vegetation and sensitive ecosystems such as wetlands The attached table presents reference standards and guidelines for nitrogen dioxide for the European Union, the United States, and the World Health Organization.

Conclusions
The evidence suggests that exposure to short-term peak concentrations of nitrogen oxides may damage health, especially of sensitive individuals such as asthmatics For many individuals, the most significant sources of repetitive exposure to peak levels of nitrogen oxides comes from residing in homes with gas cooking or heating appliances or from cigarette smoking Long-term exposures to high levels of nitrogen dioxide (well above the highest ambient levels reported in urban areas in the United States) has been shown to lead to development of chronic lung injury and disease in animals However there is still considerable uncertainty regarding chronic health effects for humans from exposure to ambient nitrogen oxides (NAPAP, 1991)

Nitrogen oxides are more of a concern as precursors to ground-level ozone and acid precipitation. Ground-level ozone is among the most toxic pollutants regulated under air quality guidelines and is also blamed for considerable damage to vegetation. In addition, nitrogen oxides contribute to acid deposition, which damages vegetation and freshwater ecosystems

Thus far the strategy to control ground-level ozone has focused primarily on controlling volatile hydrocarbons However future strategies will likely focus increasingly on reducing emissions of nitrogen oxides (Godish, 1991)

Recommendations
In the long-term, countries should seek to ensure that ambient exposure to nitrogen dioxide should not exceed the WHO recommended guidelines--see attached table In the interim, countries should set ambient standards for nitrogen dioxide which take account of (a) the benefits to human health and to sensitive ecosystems of reducing exposure to nitrogen dioxide (b) the concentration levels achievable by pollution prevention and control measures and (c) the costs involved in meeting the standards In adopting new ambient air quality standards countries should set appropriate phase-in periods during which districts or municipalities that do not meet the new standards are expected and will be assisted to attain these standards Where there are large differences in either the costs or benefits of meeting air quality standards it may be appropriate to establish area-specific ambient standards on a case-by-case basis

For the purpose of carrying out environmental assessments of projects countries should establish a trigger value for ambient exposure to nitrogen dioxide This trigger value is not an ambient air quality standard, but is simply a threshold which, if it is exceeded in the area affected by the project, will mean that a more detailed environmental assessment should be carried out The trigger value may be equal to or lower than the country's ambient standard for nitrogen dioxide Countries may wish to adopt EU U S or WHO guidelines or standards as their trigger value The trigger value should be agreed by the country and the World Bank before an environmental assessment is undertaken In the absence of an agreed value the World Bank will use trigger values of 200 $\mu g/m^3$ one-hour exposure if this is exceeded on more than seven days in the year or 400 $\mu g/m^3$ for any one-hour period during the year

Reference Standards and Guidelines for Ambient Levels of Nitrogen Dioxide ($\mu g/m^3$)

	Annual Average	*24-Hour Average*	*1-Hour Average*
EU Limit Values (1985)	200[1]	-	-
U S Standards (1992)	100[2]	-	-
WHO Guidelines (1977)	-	-	190-320[3]
WHO Guidelines for Europe (1987)	-	150	400

[1] 98th percentile calculated from the mean values per hour or per period of less than an hour taken throughout the year
[2] Arithmetic mean.
[3] Not to be exceeded more than once a month. Only a short term exposure limit has been suggested.

Sources WHO (1977 1987) US Government Printing Office (1992) European Communities (1985).

Further Information

The following are suggested as sources of additional information (these sources are provided for guidance and are not intended to be comprehensive)

Canada's Federal-Provincial Advisory Committee on Air Quality 1987 *Review of National Ambient Air Quality Objectives for Nitrogen Dioxide* Ottawa, Ontario Environment Canada.

European Communities Directive 85/203 March 7, 1985

Godish, Thad 1991 *Air Quality* Chelsea, Michigan Lewis Publishers

National Acid Precipitation Assessment Program. U S Government Printing Office, Washington, D C Various volumes and years, 1987-1991

Ostro B 1994 "Estimating the Health Effects of Air Pollutants A Method with an Application to Jakarta Policy Research Working Paper 1301 Policy Research Department, Public Economics Division Washington, D C World Bank.

Schwartz, J and S Zegler 1990 "Passive Smoking Air Pollution and Acute Respiratory Symptoms in a Diary Study of Student Nurses " *American Review of Respiratory Disease* 141 62-67

U S Environmental Protection Agency (EPA) 1990 *National Air Quality and Emission Trends Report 1990* EPA-450/4-91-023 November North Carolina Research Triangle Park.

U S Government Printing Office (GPO) 1992 40 Code of Federal Regulations Part 60

World Health Organization 1977 "Oxides of Nitrogen " *Environmental Health Criteria 4* Geneva, Switzerland

——— 1987 *Air Quality Guidelines for Europe* WHO Regional Publications European Series 23 Regional Office for Europe Copenhagen

World Resources Institute 1994 *World Resources 1994-95 A Guide to the Global Environment* New York Oxford University Press

The information in this summary is for use by World Bank staff and consultants in carrying out the policies set out in OP 4 01 Environmental Assessment, and related documents

SECTION 3 - SULFUR DIOXIDE EMISSION CONTROL

3.1 Background

3 1 1 Effect of Sulfur Dioxides

Most sulfur dioxide is produced by the combustion of fuels containing sulfur or by roasting metal sulfide ores, although volcanoes are also a source of sulfur dioxide emissions Thermal power plants burning high sulfur coal or mazut are main sources of sulfur emissions worldwide

Exposure to sulfur dioxide in the ambient air has been associated with reduced lung functions, increased respiratory symptoms and diseases and irritation of the eyes nose and throat Periodic episodes of exposure to very high ambient air concentrations of SO_2, even for short periods, appear to cause the most health and vegetation

The effects attributed to sulfur dioxide may actually be caused not only by SO_2, but by sulfate aerosols and by SO_2 absorbed onto particulate matter While SO_2 alone, when inhaled will dissolve in the fluids of the upper respiratory system and be absorbed into the blood stream, SO_2 absorbed on particulate matter can be carried deep into the pulmonary system Therefore, reducing the presence of particulate matter may also reduce the health impacts of SO_2

Sulfur oxide emissions are believed to cause widespread damage to vegitation including forests and agricultural crops While plants in the immediate vicinity of the emission source are the most vulnerable, trees and other plants exposed to wet and dry acid depositions some distance from the source of emissions may also be injured The impact will vary greatly according to soil type, plant species and other conditions not well understood

Acid depositions can damage freshwater lakes and streams by lowering the pH of the water Few fish species can survive large shifts in pH and affected lakes may become completely devoid of fish life

Sulfur oxide emissions also effect building stone and many metals Acids in the ambient air or in precipitation will chemically erode building materials such as marble and limestone and have been associated with damage to many historical monuments and works of art

3 1 2 Regulation of Sulfur Oxides in the Atmosphere

Ambient air quality standards are generally established to limit the allowable concentration of sulfur dioxide Concentration limits may include values for both short term exposure (24 hours) and long term exposure (annual average) and may distinguish between concentration limits for SO_2 itself as well as associated particulate matter The World Health Organization (WHO) the US EPA as well as other organization have developed reference standards for sulfur oxide concentrations which may serve as guidelines to countries preparing or revising their ambient air quality standards

3 1 3 Emission Limits

Although ambient air concentation of suflur dioxide is of serious concern, the are significant variations in SO_2 emission limits from thermal power stations The World Bank presently limits SO_2 emissions to 100 tonnes per day (tpd), from stations or to 0 2 tpd per MWe (whichever is lower) For a 2 x 500 MWe station, for example, the emission limit would be 100 tonnes per day, while for a 2 x 200 MWe station, the limit would be 80 tonnes per day The Bank does not impose an SO_2 concentration limit (mg/Nm^3) at this time however

These emission limits are now under consideration for revision with theproposed limits as follows

- 0 2 tpd per MWe for first 1000 MWe (0 1 tpd for additional capacity)
- Maximum emission not to exceed 2000 mg/Nm^3

The 2000 mg/Nm^3 limit can be usually be achieved by firing a "compliance" coal with a sulfur content of 0 5 to 0 6 wt % sulfur content

United States emission limits for existing coal-fired plants has recently been set at a yearly average of 1480 mg/Nm^3 for all plants Plants with higher emissions may use permits from plants with lower emissions instead of reducing emissions United States emission limits for new coal-fired plants are lower They are frequently based on Best Control Technology and typically require SO_2 reduction efficiencies of as much as 95 %

Proposed Kazakstan emission limits are more closely related to German standards These are,

FUEL	PROPOSED LIMITS mg/Nm^3
COAL	400
OIL	400

and could probably not be achieved by firing a low sulfur coal

3 2 Overview of Sulfur Dioxide Control Technologies

The need to remove SO_2 from flue gases generated by power generation boilers has led to the development of a wide variety of flue gas cleaning processes Only relatively few of these processes have been applied commercially on large coal-fired power plant boilers

Commercially applied technologies may be categorized according to a variety of process characteristics The common elements in all SO_2 absorption processes are that

- they all require the use of an alkaline chemical called the "reagent"

- they all convert the gaseous SO_2 recovered from the flue gas into either a liquid or a solid waste byproduct

Thus, the processes can be characterized by the type of reagent used and the type of waste byproduct created For this study, we have found if convenient to categorize the processes as

- Wet Flue Gas Desulfurization (WFGD)
- Dry and Semi-dry Flue Gas Desulfurization (DFGD)
- Recovery Processes

Better than 75% of all the FGD systems installed world-wide are **Wet FGD Systems** which use limestone or lime as the reagent These calcium-based systems can be categorized further by the type of waste byproduct generated The *"Throwaway"* processes create a waste byproduct which is disposed of by landfilling or ponding For landfilling it is normally necessary that the WFGD waste solids first be blended with flyash, to produce a material stable enough to allow handling by conventional landfill equipment

As an alternative, the waste may be oxidized to *gypsum* (calcium sulfate) The byproduct gypsum requires no blending to stabilize The gypsum may be sold as a byproduct for utilization as a raw material in the cement and wallboard industries of may be disposed of by landfilling

Sea water from the condenser cooling circuit contains sufficient natural alkalinity to absorb SO_2 without the addition of an alkali reagent This process, which produces no solid waste product, is also considered as a Wet FGD process SO_2 removal efficiencies of greater than 95% are achievable with these wet processes

An alternative to the wet processes, the **Dry or Semi-dry Flue Gas Desulfurizaton** (DFGD) process has usually been applied on installations where SO_2 removal requirements are not as great Lime spray drying systems were installed originally on power plants burning low (<1%) sulfur coal in the western USA, but recent process advancements have made it possible to apply this process to higher sulfur coal as well The process produces a dry powder containing the calcium-sulfur desulfurization byproducts mixed with dry fly ash The material is generally disposed of as landfill Flue Gas desulfurization efficiencies of 90 % are readily achieved

Moderate SO_2 reduction, in the 40-60% range, is achievable with the calcium-based *dry processes* where the reagent is injected either into the furnace (Furnace Sorbent Injection Process) or into the flue gas between the air preheater and the dust removal equipment (Duct Injection Process) These processes have the lowest investment cost of all SO_2 reduction alternatives They have been the focus of the U S Department of Energy Clean Coal Technology Program the objective of which has been to provide a low capital cost alternative in retrofit applications

FGD **Recovery Processes** that recover the sulfur content from the flue gas, in the form of marketable sulfuric acid, elemental sulfur or liquefied sulfur dioxide, have found very limited application world-wide While alleviating the problem of by-product disposal, recovery processes are more complex and more expensive to install, operate and maintain than the non-recovery

process Recovery processes utilize a regenerable absorbent or adsorbent which releases the SO2, usually upon the application of heat during the regeneration step, and is then reused

FGD processes discussed in this section are listed in Exhibit 3 2-1 They represent processes that

- Are capable of achieving at least 50% SO_2 removal efficiency
- Are proven through operating experience on utility coal-fired power plant units on at least 100 MW scale, or where performance has been successfully demonstrated in utility applications

Several of these technologies have been described in detail in this program

3.3 Wet Limestone FGD Process

The Wet Limestone process has been proven in installations worldwide This wet flue gas desulfurization (WFGD) system utilizes limestone slurry as the scrubbing reagent The process is capable of producing a gypsum byproduct suitable for wallboard manufacturing and/or cement production In the event commercial byproducts are not required, the system may produce a product which can be disposed of as landfill The FGD system is typically designed for sulfur dioxide removal efficiencies of 90% or higher and HCl removal efficiencies up to 95%

- Gas Handling
- Sulfur Dioxide Absorption (and Oxidation)
- Reagent Preparation
- Product Dewatering
- Waste Disposal

A typical schematic diagram is presented in Exhibit 3 3-1

Flue gas from the particulate collector is drawn by the boiler ID fans which provide the energy necessary to overcome the gas side resistance of the downstream FGD system equipment The flue gas stream flows into the sulfur dioxide absorber where it is immediately saturated (adiabatically) by exposure to the absorber slurry Contact between the flue gas and the slurry containing reagent may occur in a variety of contacting devices (Exhibit 3 3-2)

Following contact with the slurry, the scrubbed flue gas passes through mist eliminators which remove entrained slurry droplets from the gas stream The mist eliminators are maintained in a clean condition by periodic washing using fresh makeup water The fresh water used for the mist eliminator wash is the principal source of makeup water to the FGD system

The flue gas handling system frequently includes bypass ductwork which permits the flue gas exiting the fan to flow untreated directly to the chimney The flow of flue gas is controlled by the use of dampers in the ductwork which when open allow the flue gas to bypass the absorbers and when closed force the flue gas through the absorbers The system may also be operated with the dampers partially open This permits a portion of the flue gas to pass untreated through the bypass ductwork while the majority of the gas is treated in the absorbers The treated (saturated) flue gas is mixed

with the hot (untreated) bypass flue gas to achieve reheat necessary to minimize visible plume from the stack

The following summarize the reactions which occur within the absorber and slurry tank By chemical reaction, SO_2 is captured from the flue gas as calcium sulfite This primary reaction product may be subsequently oxidized in the recycle tank to calcium sulfate which crystallizes as dihydrate

(1)	$SO_2 + H_2O$	→	H_2SO_3	Absorption
(2)	$CaCO_3 + H_2SO_3$	→	$CaSO_3 + CO_2 + H_2O$	Neutralization
(3)	$CaSO_3 + ½O_2$	→	$CaSO_4$	Oxidation
(4)	$CaSO_3 + ½H_2O$	→	$CaSO_3\ 1/2H_2O$	Crystallization
(5)	$CaSO_4 + 2H_2O$	→	$CaSO_4\ 2H_2O$	Crystallization

After the slurry has been exposed to the gas stream in the absorption section, it enters the recycle tank at the bottom of the absorber Fresh makeup limestone is added to the reaction tank as a 25%-40% solids slurry to maintain the design pH The tank is designed to (i) retain the slurry for sufficient time to permit dissolution of fresh limestone, (ii) facilitate the oxidation of calcium sulfite to calcium sulfate, and (iii) permit the crystallization of the reaction products In order to accomplish in situ forced oxidation within the recycle tank, air is sparged into the slurry at a pre-designed rate and submergence level The resulting product is gypsum which can be utilized for building products such as cement and wallboard or disposed of in a landfill

The residence time of solids in the reaction tank is generally in the range of 15 to 25 hours This extended residence time, coupled with proper recycle tank design and method of operation, provide an environment conducive for gypsum crystal growth

Recirculation pumps (where required by the process) take suction from the recycle tank and provide the volume of recycle slurry necessary to maintain SO_2 removal efficiency These pumps also feed a small portion of the slurry to the primary dewatering system which removes reaction products from the absorption cycle The slurry in the recycle tank is agitated to maintain the solids in suspension and prevent solids settling to the tank bottom

The reagent preparation system may be designed to receive pre-ground limestone or to grind crushed limestone on-site In these systems, grinding in wet ball or tower mills is used for the production of the makeup limestone slurry The reagent preparation system consists of (i) conveyors for crushed limestone, (ii) day storage silos, (iii) wet grinding mills, (iv) slurry classification and recycle equipment, and (v) slurry storage tanks

Crushed limestone which has been transported to the day storage silos by conveyors is fed via a weigh feeding system from the silo into the wet grinding mill The pulverized limestone is classified in a hydrocyclone type centrifuge The fine fraction (overflow) flows to a limestone slurry storage tank while the coarse fraction (underflow) is recycled back to the mill for further grinding

When supply and economics dictate, a pre-ground limestone product is utilized In this system, pre-ground limestone is delivered and pneumatically conveyed into the (i) limestone storage silo The limestone is fed by a (iv) screw feeder into the (v) limestone slurry tank where it is slurried by the proportional addition of process water

The product (gypsum) dewatering system is designed to concentrate the gypsum crystals to an ultimate solids content of 85-90% + and recirculate process water to the absorption and reagent preparation systems The dewatering system design consists of (i) hydroclones, (ii) vacuum belt filters, and (iii) reclaim water equipment

Absorber bleed slurry at 10% - 12% wt solids content is pumped through primary hydroclones which concentrate the product to produce a 50-60% wt solids underflow Product gypsum solids contained in the primary hydrocyclone underflow stream flow to the vacuum belt filters where they are concentrated to approximately 90% by weight The filtrate is returned to the reagent preparation and absorption systems Process water is utilized in the following services within the process (i) the limestone preparation area to slurry to pulverized limestone, (ii) the absorber recycle tanks to control density, and (iii) all area flush connections to flush slurry lines

Dewatered gypsum product, with the consistency of wet sand, will be conveyed to the on-site waste disposal landfill where the material will be disposed of along with the recovered fly ash and bottom ash Details of the landfill operation are described eleswhere this report

Process Advantages and Disadvantages

Process advantages are

1 Limestone is the least costly of all alkali reagents It is readily available in crushed form It also may be available as a fine grind dry powder

2 Product gypsum is often usable in building materials either as cement or wallboard The high state of oxidation permits landfill disposal if necessary

3 No secondary waste is produced A waste water bleed stream is produced if usable product gypsum is required, but the quantity is small This bleed may be treated, if required prior to disposal

4 The system may be designed to achieve an SO_2 removal efficiency greater than 95 % if desired The process is applicable to all levels of sulfur in fuel

5 The high SO_2 removal efficiency of the process makes it practical to reheat the flue gas utilizing partial bypass while at the same time achieving the desired overall removal efficiency of greater than 70 %

6 The process thoroughly demonstrated worldwide Systems up to 700 MWe with single absorber operate commercially

Process disadvantages are

1 Significant equipment associated with dewatering and conveying of product gypsum

2 Relatively large tanks of recycle slurry are required Materials of construction must be carefully selected to avoid corrosion As a result, investment costs are high

3 Production of a commercial grade gypsum byproduct requires the generation of a waste water stream which requires treatment prior to disposal

3.4 Dry and Semi-dry Flue Gas Desulfurization (DFGD)

A number of "Dry" Flue Gas Desulfurizaton Systems have been investigated These technologies are described schematically in Exhibit 3 4-1 The technologies are based on the injection of alkali lime or limestone, either upstream or downstream of the air heater, into flue gas containing both SO_2 and fly ash While some desulfurization reaction occurs in the dry flue, the efficiency of desulfurization can be increased by humidification of the flue gas The more moisture added and the longer the flue gas reaction time, the greater the degree of flue gas desulfurization

The degree of moisture addition is limited to the amount required to cool the flue gas to about a 10°C approach to the flue gas saturation temperature, ensuring that all of the water added is evaporated and the flue gas and fly ash always remain "dry" Several of the more commercially developed dry technologies are described in the following sections

3 4 1 Semi-dry Lime Spray Drying Process

This process is classified as semi-dry, not wet, because the flue gas is not fully humidified as it is in wet systems Typically the flue gas is humidified only to within 10-30°C of its adiabatic saturation temperature Contact between flue gas and reagent occurs in a spray drying vessel located upstream of the particulate collection device Lime is the most popular reagent, although sodium carbonate may be used Other sodium-based reagents, such as nacholite and trona ore, have also been shown to be effective absorbents for spray drying Figure 3 4-2 illustrates the process diagram for a typical spray dryer FGD system

The FGD system consists of the following main subsystems

- Gas Handling
- Sulfur Dioxide Absorption
- Reagent Preparation
- Solids Collection and Disposal

Flue gas exiting the combustion air preheater comes in contact with an alkaline solution or slurry in a spray dryer The flue gas passes through a contact chamber (Exhibit 3 4-3) and the solution or slurry is sprayed into the chamber with a rotary or nozzle atomizer (Exhibit 3 4-4)

The overall SO_2 absorption reactions for lime spray drying can be represented as

(1) $Ca(OH)_2 + SO_2 + H_2O \rightarrow CaSO_3 \cdot \frac{1}{2}H_2O + 3/2H_2O$ Desulfurization

(2) $CaSO_3 \cdot \frac{1}{2}H_2O + \frac{1}{2}O_2 + 3/2H_2O \rightarrow CaSO_4 \cdot 2H_2O$ Oxidation

The quantity of calcium ions available in the liquid phase of the slurry to form the calcium salts is limited by the solubility of slaked lime in water The calcium ions react in the liquid phase of the slurry droplet, and they are replaced with fresh ions from the dissolution of additional solid phase slaked lime

The sulfur dioxide is absorbed in water and reacts with the water to form sulfurous acid (H_2SO_3) before dissociating to form sulfite ions Some of the sulfite ions are oxidized by flue gas oxygen to form sulfate ions The heat of the flue gas dries the atomized droplets while the droplets absorb sulfur dioxide from the flue gas The sulfur dioxide reacts with the alkaline reagents to form solid phase sulfite and sulfate salts Most of the solids (and any fly ash present) are carried out of the dryer in the exiting flue gas The rest fall to a hopper at the bottom of the dryer

The design of the spray dryer chamber is important to efficient removal of sulfur dioxide Contact chamber volume must provide a flue gas residence time that maximizes SO_2 removal and permits adequate drying of the particles Most lime spray dryers for this application provide a flue gas residence time of 10 to 12 seconds

The flue gas disperser, at the inlet to the spray dryer, and the spray atomizer system must provide intimate mixing of the flue gas and the atomized droplets Atomizer types used in spray dryer FGD applications include both rotary atomizers and two-fluid nozzles Rotary atomizers, which are normally utilized in large utility applications, use a rapidly spinning disk to produce a fine droplet mist in the spray dryer The atomizer design is optimized to produce the appropriate size droplets Fine droplets are required to maximize SO_2 removal efficiency, but if droplets are too small they may dry out before sufficient SO_2 absorption has occurred Where large contact chambers are utilized, multiple atomizers may be required

The flue gas then flows to the solids collection device where the dry solids (reaction products, unreacted absorbent, and fly ash) are collected A fabric filter (baghouse) is the most common solids collection device, but ESPs are also used When a baghouse is used significant absorption of sulfur dioxide may occur during solids collection Absorbent in the solids collected on the surface of the bags reacts with sulfur dioxide remaining in the flue gas

The cleaned flue gas leaves the collection device and is exhausted to the atmosphere (stack) by the boiler ID fans As in the case of the other processes, the fans are located downstream of the particulate collection device In contrast to the wet processes, however, the absorber (spray dryer) is located upstream of the collection device

Bypass reheat is not feasible when the flue gas contains particulates Nevertheless, the discharge flue gas is maintained above the dew point by control of the spray dryer discharge temperature and by the heat of compression added by the boiler ID fans

Process variables that affect SO_2 removal in the spray dryer include approach to adiabatic saturation temperature, atomized slurry droplet size, the flue gas residence time in the spray dryer, and the absorbent stoichiometry A typical process flow control diagram is shown in Exhibit 3 4-5

The process is dependent on the use of lime as the reagent, since the reactivity of limestone is insufficient to achieve any significant desulfurization of the flue gas in the dry environment As is the case with other technologies utilizing lime as the reagent, the lime is delivered in pebble form in closed containers (trucks) protected from contact with air The incoming lime is received and stored in a silo In lime systems, pebble lime (CaO) must be slaked to produce a reactive lime slurry The slaking reaction may be expressed as follows

(3) $CaO + H_2O \rightarrow Ca(OH)_2$ Slaking

Absorbent utilization can often be improved by recycle of the waste solids, particularly where the process is applied to reelatively high sulfur coals The solution or slurry sprayed into the dryer is pumped from an absorbent holding tank Recycle solids from the spray dryer hopper or downstream solids collection equipment contain unreacted absorbent and are often used to supplement the fresh absorbent feed Either recycle solids are slurried separately and added separately through the atomizer, or they are added directly to the fresh absorbent in the holding tank

Disposal methods for solids collected from spray dryer processes vary with the type of absorbent used Spray dryer FGD has an advantage over conventional wet FGD in that sludge handling equipment (such as clarifiers, thickeners, vacuum filters, and centrifuges) is not required Waste solids from spray dryer processes have handling properties similar to dry fly ash and are usually conveyed pneumatically to storage bins and then trucked to landfill sites for disposal

Process advantages are

1 Spray dryer systems do not have the large volume of liquid scrubbing medium recirculating in the absorber This results in a far less complex system

2 The "dry" system is much less sensitive to the corrosion and erosion problems of the wet systems Materials of construction need not be resistant to attack by corrosive acids since dry solids and not wet slurries are handled in this equipment

3 All dewatering equipment is eliminated

4 As a result of the above, initial capital cost is generally lower than a limestone wet scrubber system

Process disadvantages are

1 Lime a more costly reagent is required instead of limestone

2 Overall SO_2 removal efficiency is limited when treating flue gas from higher sulfur fuels This should not be a consideration for the low sulfur fuels fired in Kazakstan

3 Product is dry powder containing fly ash and must disposed of with same considerations as fly ash No useful saleable product is available

4 A single vessel absorber design is not practical for greater than a 350 MWe system

3 4 2 Circulating Fluid Bed Desulfurization Technology (GSA)

The circulating fluid bed FGD system operates on essentially the same chemical principles as the spray dryer system The system is described in Exhibit 3 4-6 In this process, a vertical cylindrical reactor is substituted for the spray dryer chamber and the reagent and water are sprayed into the stream of ash containing flue gas circulating through the reactor As in the case of other circulating fluid bed technologies, circulating fluid bed boilers for example, the major portion of the solids exiting the top of the reactor is collected and returned to the bottom of the reactor where it is contacted with fresh flue gas, reagent and water

The high degree of contact between the flue gas and the circulating solids allows a high degree of desulfurization to be accomplished (Exhibit 3 4-7) At the same time, the continued recirculation of the ash, containing unreacted reagent, achieves a high degree of reagent utilization

The technology compares fairly well with the spray drying technology, although it has not yet been demonstrated in large commercial utility applications

Advantages of the GSA system are

1 With no high speed rotating spray system required, operating maintenance is anticipated to be significantly reduced

2 The energy required to inject the lime and water into the flue gas steam is considerably less for the GSA than that required for the high energy spray atomizer

3 The GSA occupies less plot area than a spray dryer chamber and may be more easily retrofit in tight situations

Disadvantages of the GSA system are

1 The flue gas side pressure drop through the circulating fly ash bed is greater than the low gas side pressure drop through the spray dryer chamber

2 The technology utilizes dry hydrated lime as the reagent instead of slaked lime slurry This reagent may not be as readily available in certain locations

3 The cylindrical reactor design has not been demonstrated in large utility size installations

3 4 3 Furnace Sorbent Injection

The Furnace Sorbent Injection technolgy has been investigated as a part of the US DOE Clean Coal Technolgy Program This investigation, designated Limestone Injection Multistage Burner (LIMB), is shown in (Exhibit 3 4-8),

The calcium-based sorbent, such as limestone or lime hydrate, is introduced directly into the boiler cavity When exposed to furnace temperatures, the sorbent decomposes to form lime particles which capture SO_2 in suspension to form calcium sulfate The reaction solid product is removed with ash in the particulate control device Humidification of the flue gas before it is treated in the particulate control equipment enhances SO_2 removal If the particulate matter is collected in an electrostatic precipitator (ESP), humidification of the flue gas is beneficial in maintaining the ESP performance

In the FSI process the following reactions take place

(1)	$CaCO_3$	→	$CaO + CO_2$	Calcination
(2)	$CaO + SO_2 + ½O_2$	→	$CaSO_4$	Sulfation

The most important variable affecting the calcination and sulfation reaction is the gas temperature at the point of sorbent injection A peak in SO_2 removal occurs for most sorbents in the range between 1300°C and 1000°C At higher temperatures, sorbent deactivation lowers SO_2 removal At temperatures below 1000 °C, the reaction rates for both calcination and sulfation are significantly reduced Typical furnace profile indicating injection points is shown in Exhibit 3 4-9

SO_2 emissions can be reduced by 30-60% depending on the type of sorbent used, Ca/S ratio and level of humidification With fine particle size limestone and Ca/S ratio of 2 to 3, the maximum SO_2 removal is in the 35-40% range Humidification of the flue gas will enhance the removal efficiency by 10% but adds to the capital investment requirements for the process

Although the technology was first investigated with the expectation that limestone would be an effective reagent, other reagents were also evaluated in the program Under similar furnace temperature conditions, the injection of lime hydrate will yield an SO_2 removal in the 50-60% range (Exhibit 3 4-10) The SO_2 removal performance can be also improved by recycling portions of the collected solids For this reason, hydrated calcitic or dolomitic lime is presently considered the reagent of choice for the FSI technology An exception is the LIFAC process developed by Tampella, but this process requires the use of a humidification reactor to achieve significant SO_2 removal efficiencies

Process advantages are

1 The technolgy is well suited for applications requireing only moderate reduction in SO_2 emissions and would seem most applicable to low sulfur, high ash content fuels

2 Minimum capital investment and minimum system modifications are required to implement this technology

3 Minimum plot area is required for the application of this technology

Process Disadvantages are

1 For moderate sulfur, low ash coals, FSI can increase the particulate loading in the boiler and in the particulate control device by two-to-threefold This disadvantage should not apply to most fuels in Kazakstan

2 Potential of boiler tube fouling and slagging due to increased solids loading and reduced ash fusion temperatures

3 Low SO_2 removal efficiency

3.5 Comparison of Alternative Technologies

The World Bank has completed a preliminary investigation of alternative sulfur dioxide control technologies and has concluded that high stacks are no longer recommended as a means of limiting ground level SO_2 concentrations In evaluating emission control technologies (Exhibit 3 5-1) the Bank has indicted a preference for dry sulfur oxide removal systems over wet The primary reasoning behind this conclusion is the lower investment costs, the reduced use of energy and water and the need to handle separate desulfurization waste products

SECTION 3 EXHIBITS

Exhibit 3 2-1

Exhibit 3 3-1

Exhibit 3 3-2

Exhibit 3 4-1

Exhibit 3 4-2

Exhibit 3 4-3

Exhibit 3 4-4

Exhibit 3 4-5

Exhibit 3 4-6

Exhibit 3 4-7

Exhibit 3 4-8

Exhibit 3 4-9

Exhibit 3 4-10

Exhibit 3 5-1

Exhibit 3 2-1

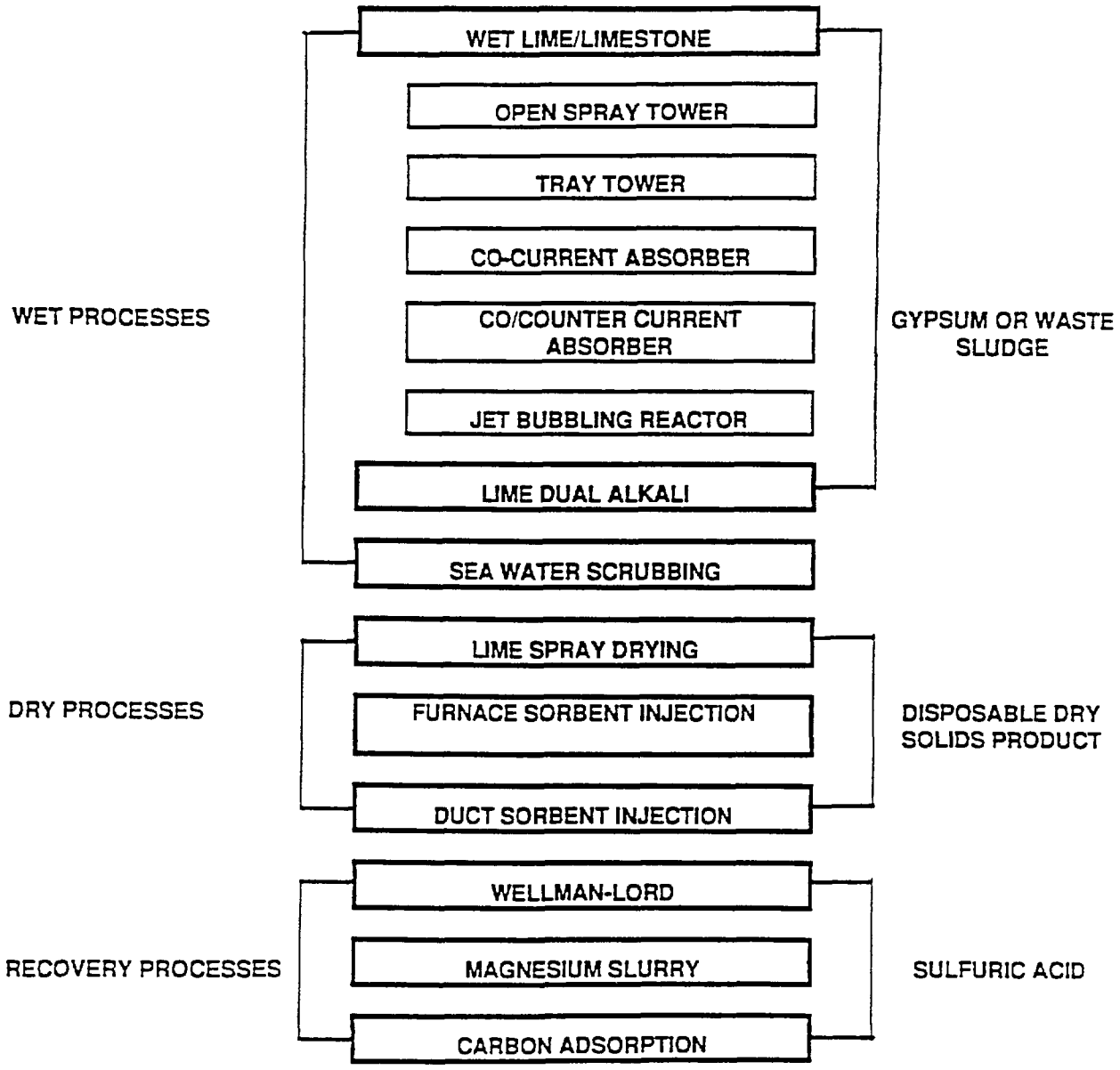
WET LIME/LIMESTONE
OPEN SPRAY TOWER
TRAY TOWER
CO-CURRENT ABSORBER
CO/COUNTER CURRENT ABSORBER
JET BUBBLING REACTOR
LIME DUAL ALKALI
SEA WATER SCRUBBING
WET PROCESSES
GYPSUM OR WASTE SLUDGE
LIME SPRAY DRYING
FURNACE SORBENT INJECTION
DUCT SORBENT INJECTION
DRY PROCESSES
DISPOSABLE DRY SOLIDS PRODUCT
WELLMAN-LORD
MAGNESIUM SLURRY
CARBON ADSORPTION
RECOVERY PROCESSES
SULFURIC ACID

Exhibit 3 3-1

TYPICAL FLUE GAS DESULFURIZATION PROCESS

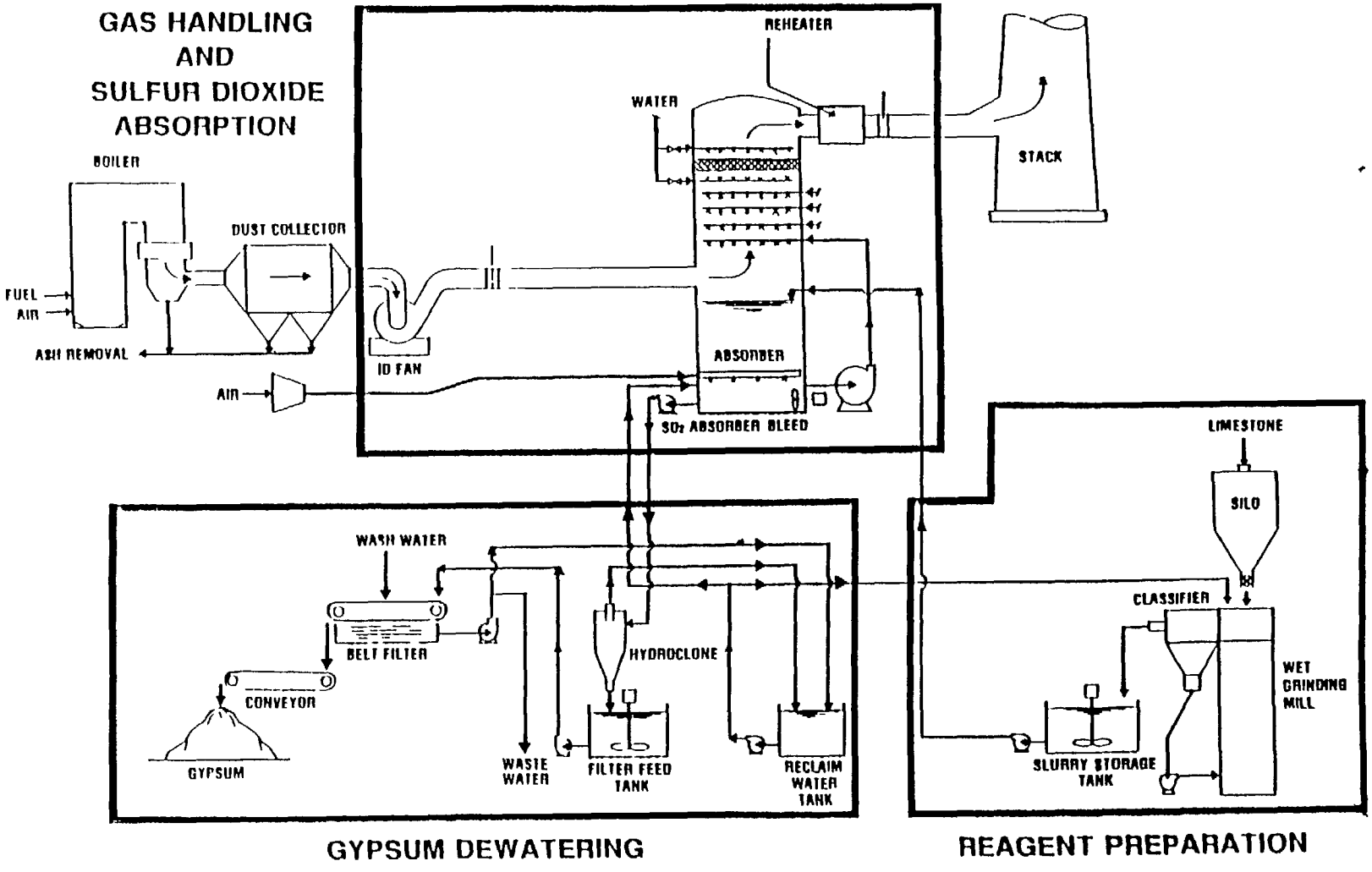

Exhibit 3 3-2

VIEW OF SPRAY TOWER FOR USE WITH WET FGD PROCESSES

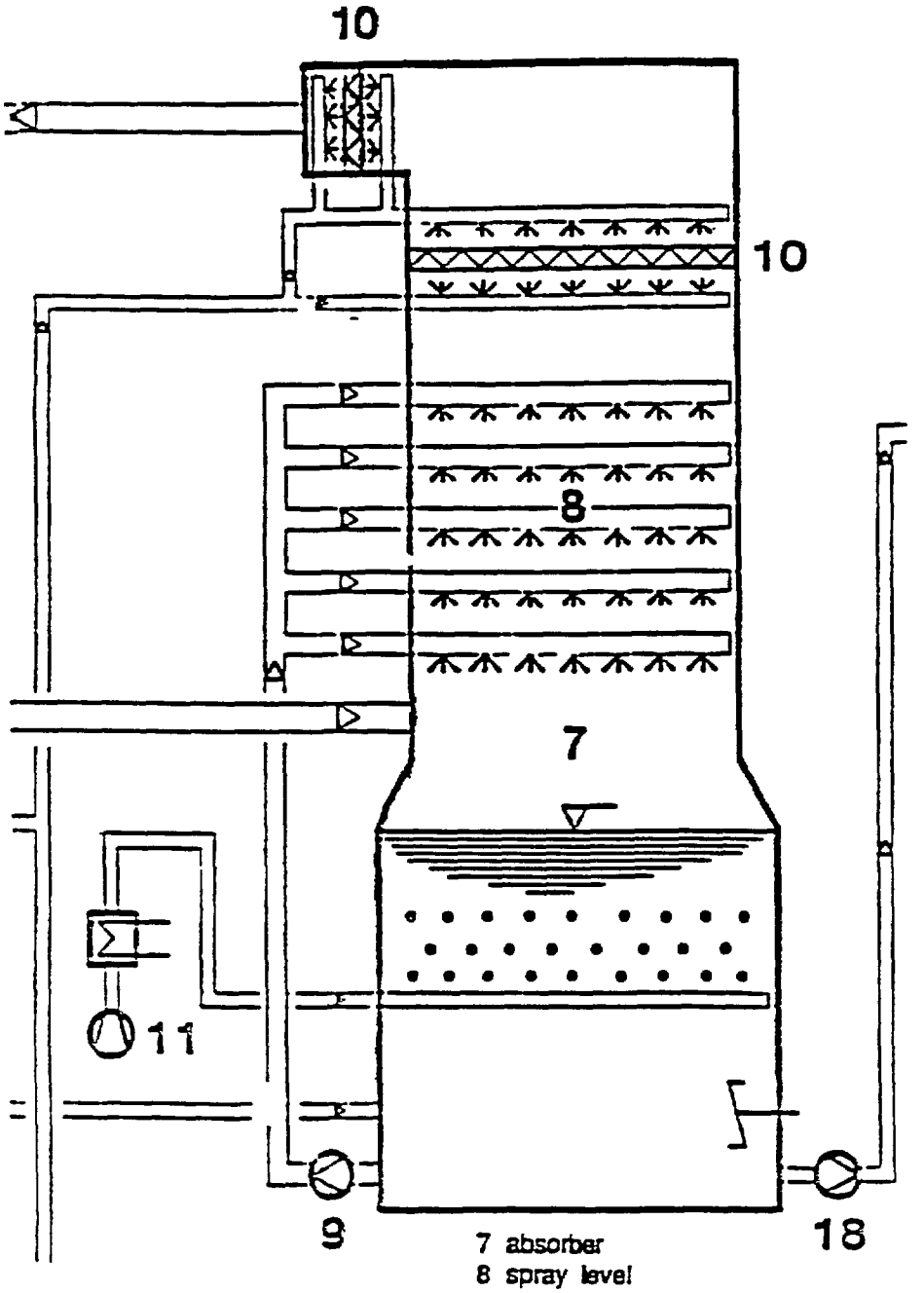

7 absorber
8 spray level
9 absorber pump
10 mist eliminator
11 oxidation air
18 absorber slurry pump

Exhibit 3 3-2

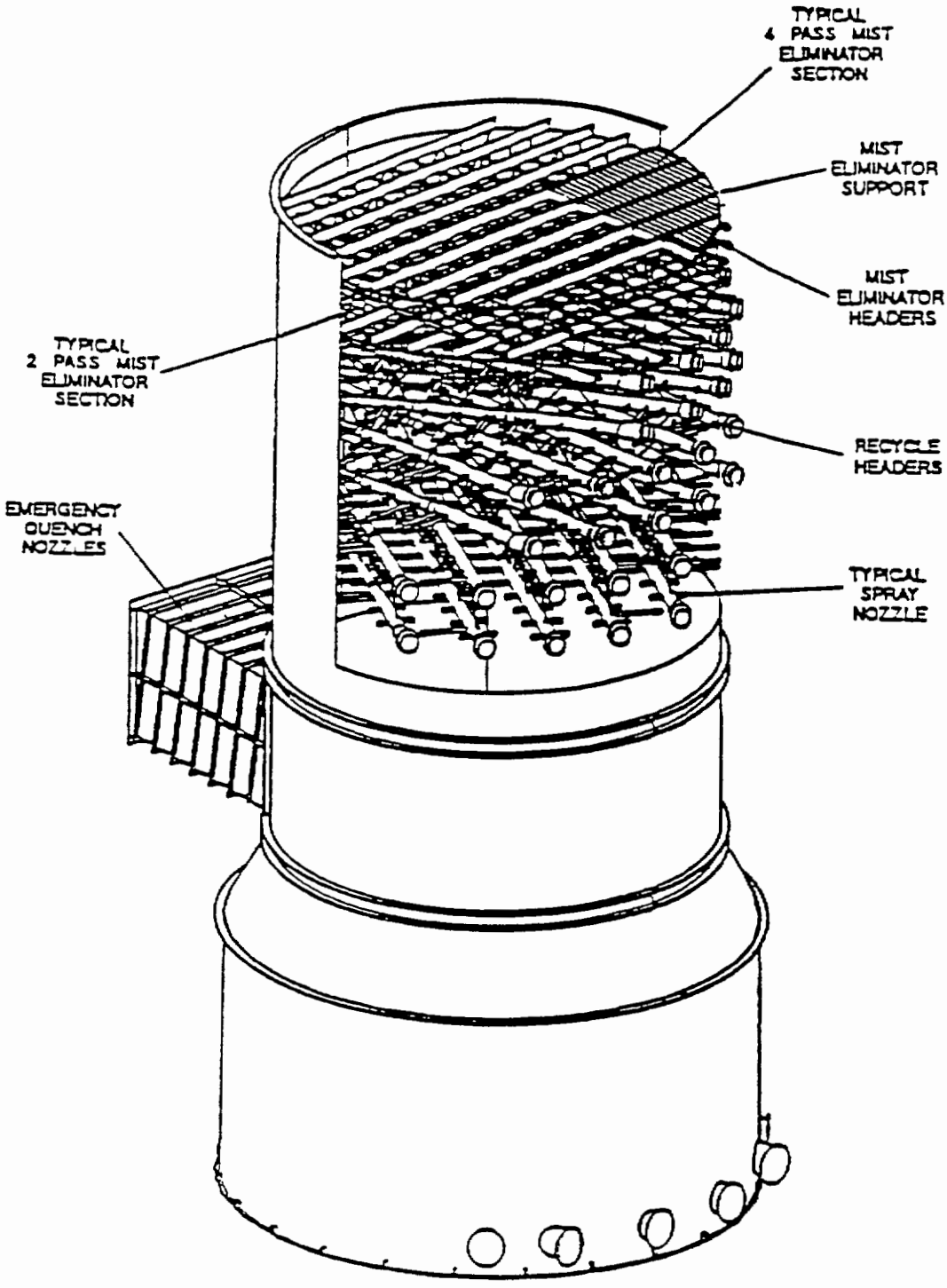

Spray Tower Design

Exhibit 3 3-2

The B&W Wet FGD System

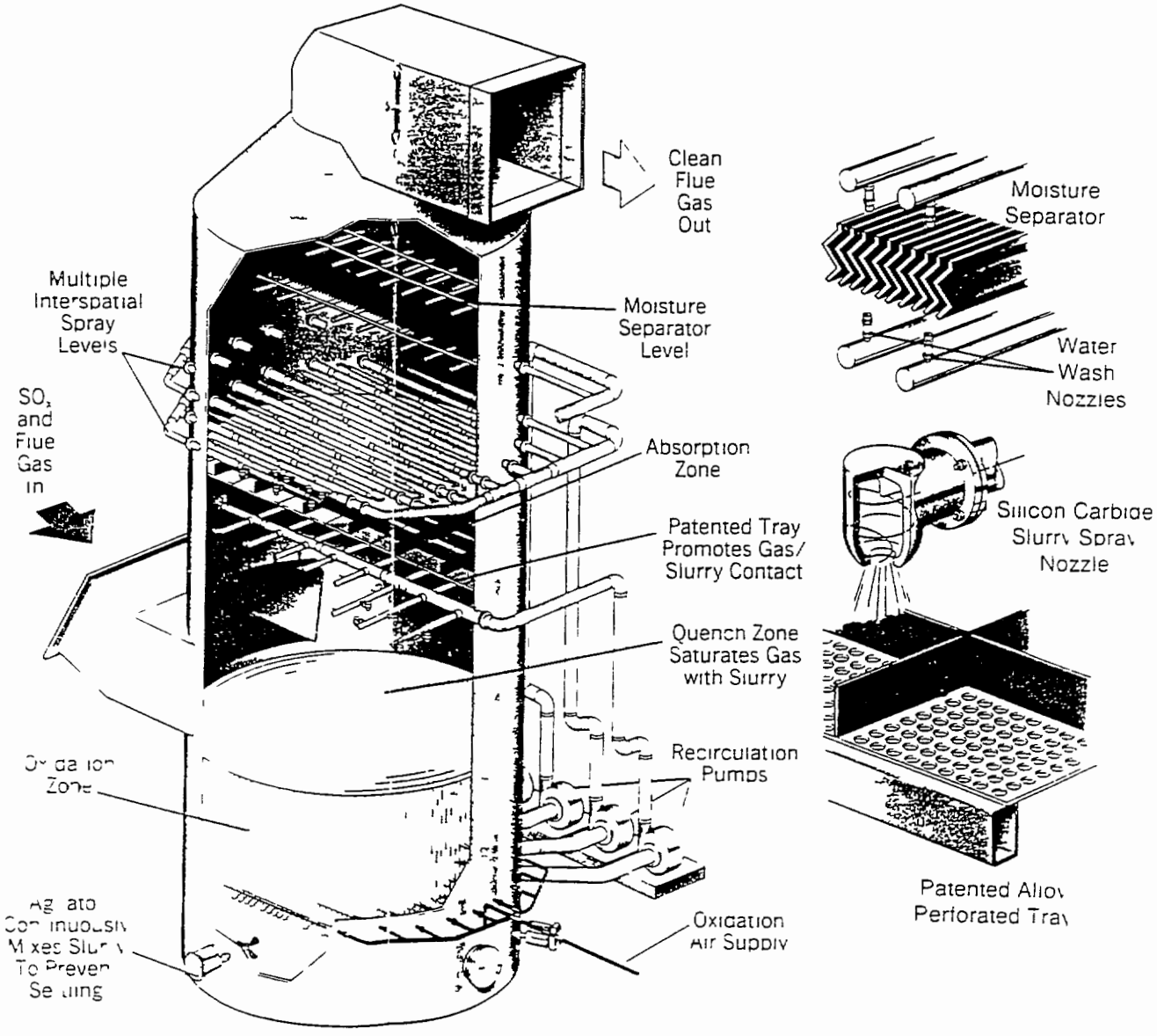

Exhibit 3 4-1

FGD Systems – Dry

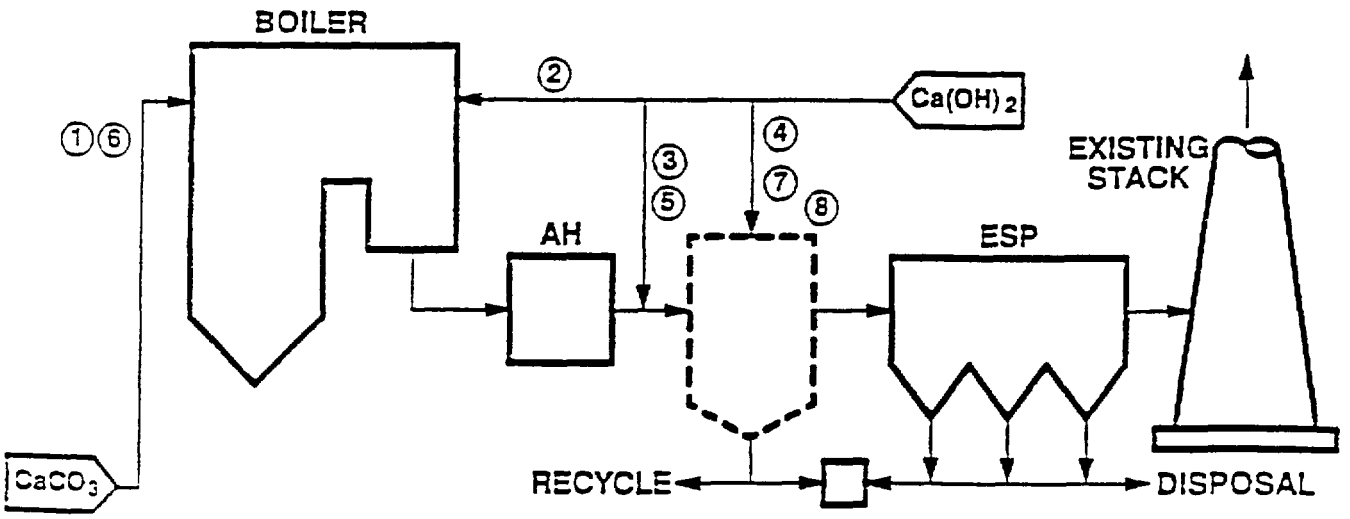

① FSI – FURNACE SORBENT INJECTION

② ESI – ECONOMIZER SORBENT INJECTION

③ DSI – DUCT SORBENT INJECTION

④ DSD – DUCT SPRAY DRYER

⑤ SDI – SODIUM DUCT INJECTION

⑥ LIFAC – LIMESTONE INJECTION

⑦ LSD – LIME SPRAY DRYER

⑧ LURGI CFB

Exhibit 3 4-1

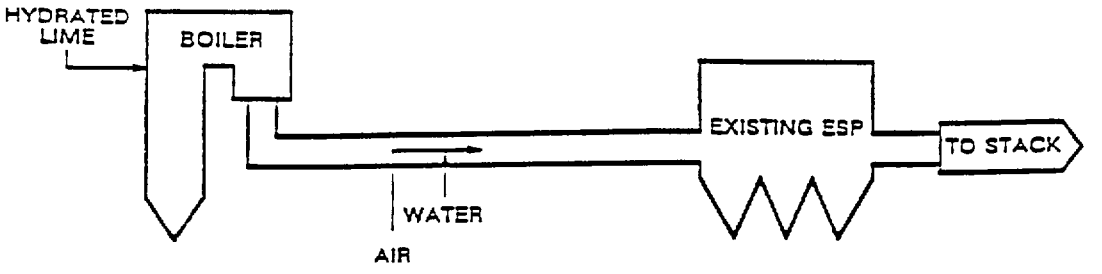

FURNACE SORBENT INJECTION

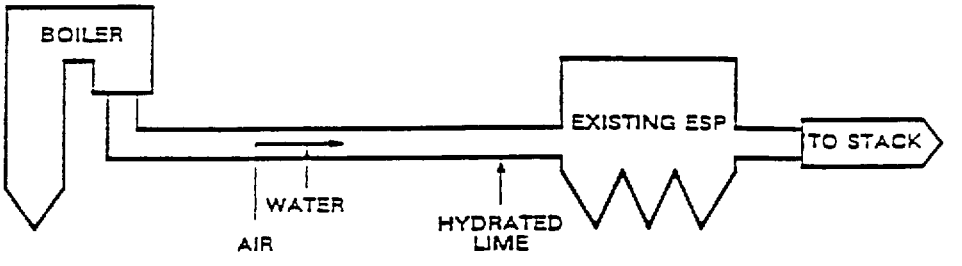

DUCT SORBENT INJECTION

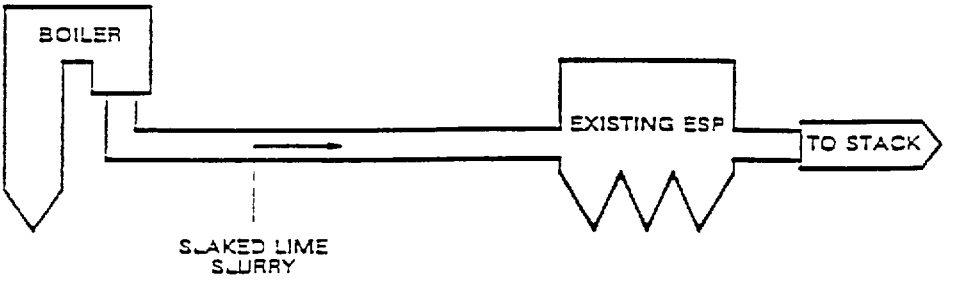

DUCT SPRAY DRYING

Process Flow Diagrams
for the FSI DSI and DSD Processes

Exhibit 3 4-1

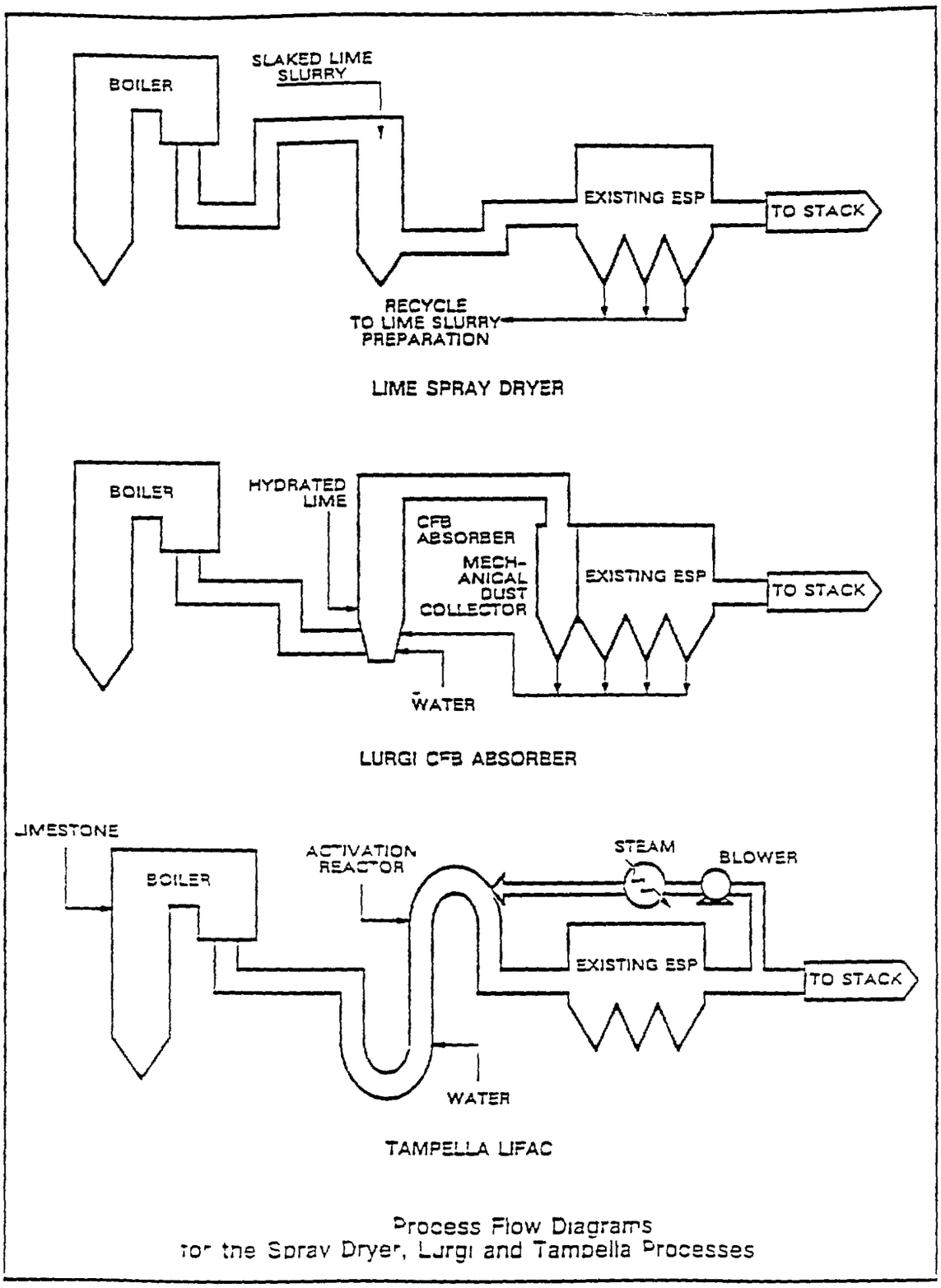

Process Flow Diagrams
for the Spray Dryer, Lurgi and Tampella Processes

Exhibit 3 4-2

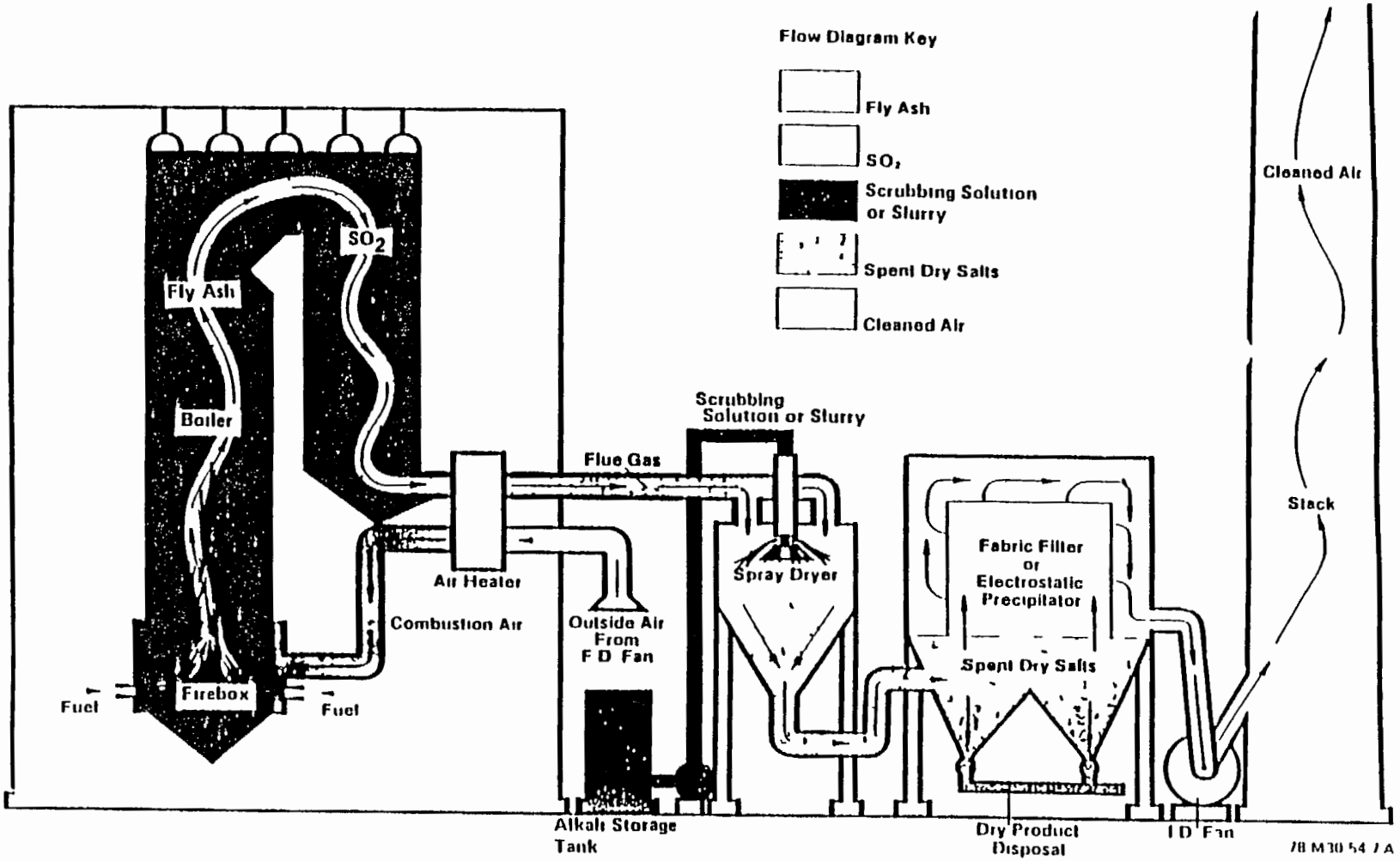

Process Flow Diagram of Two-Stage Dry FGC System

Exhibit 3 4-3

SPRAY ABSORBER

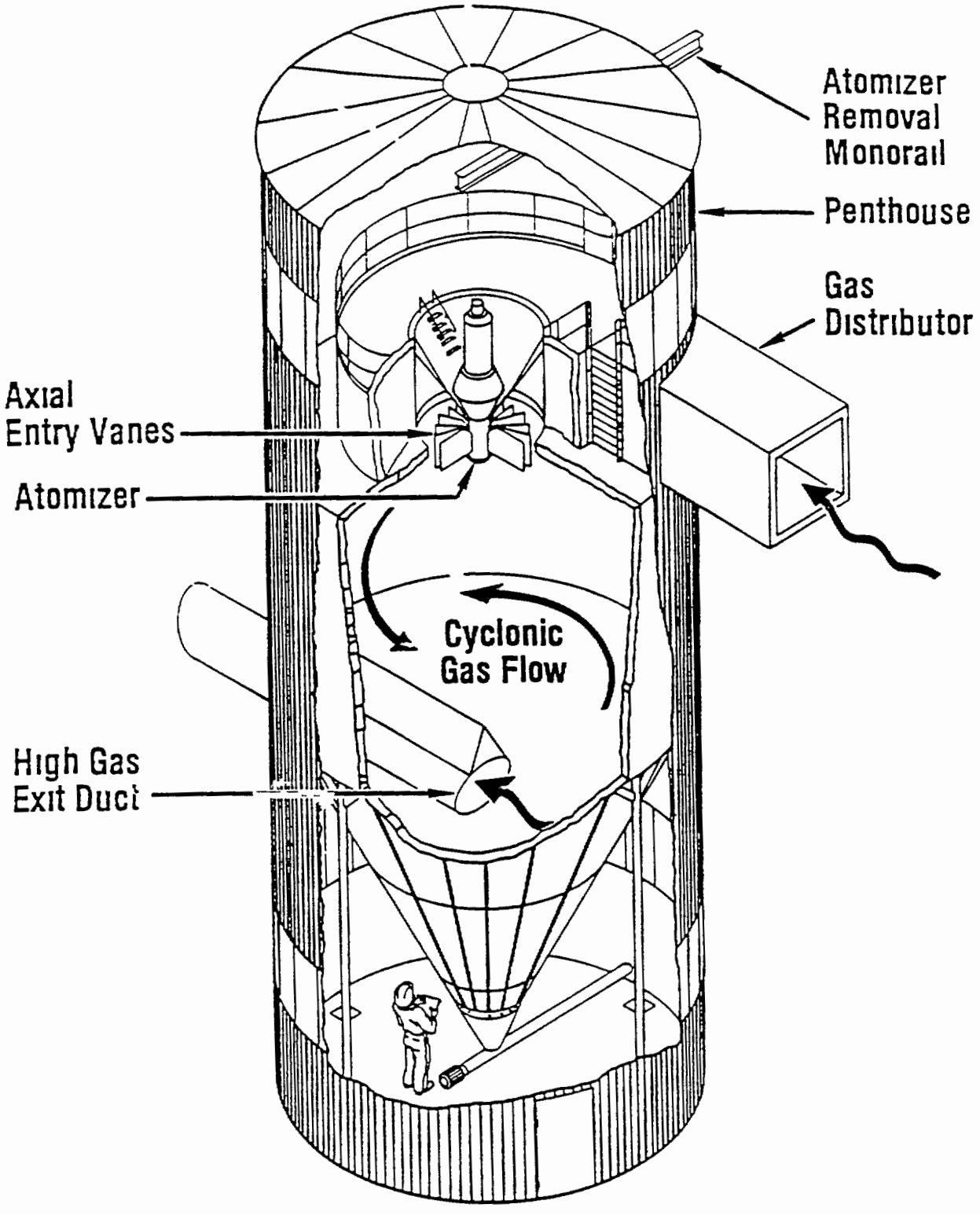

Exhibit 3 4-4

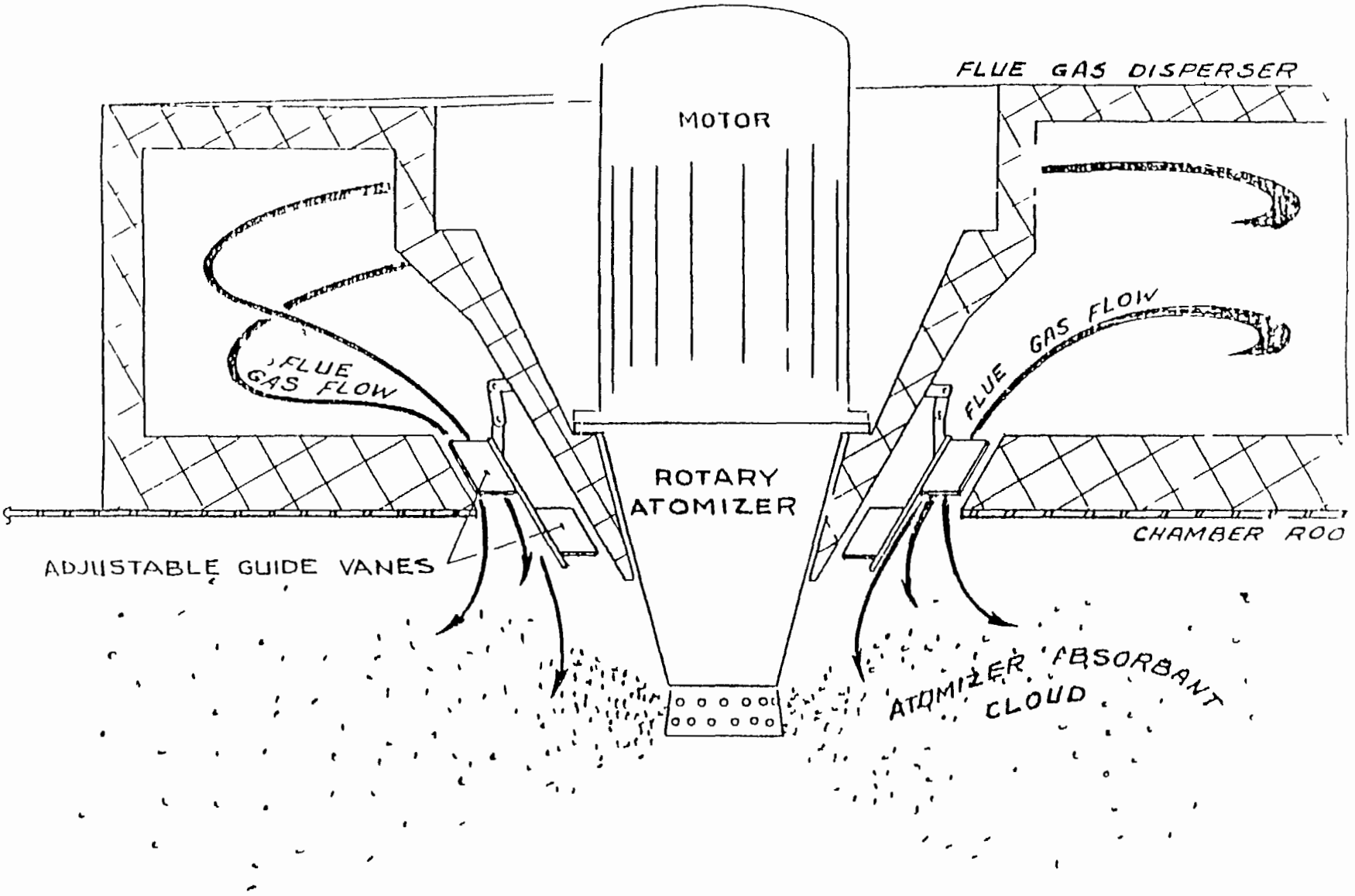

NIRO ATOM
FLUE GI

Exhibit 3 4-5

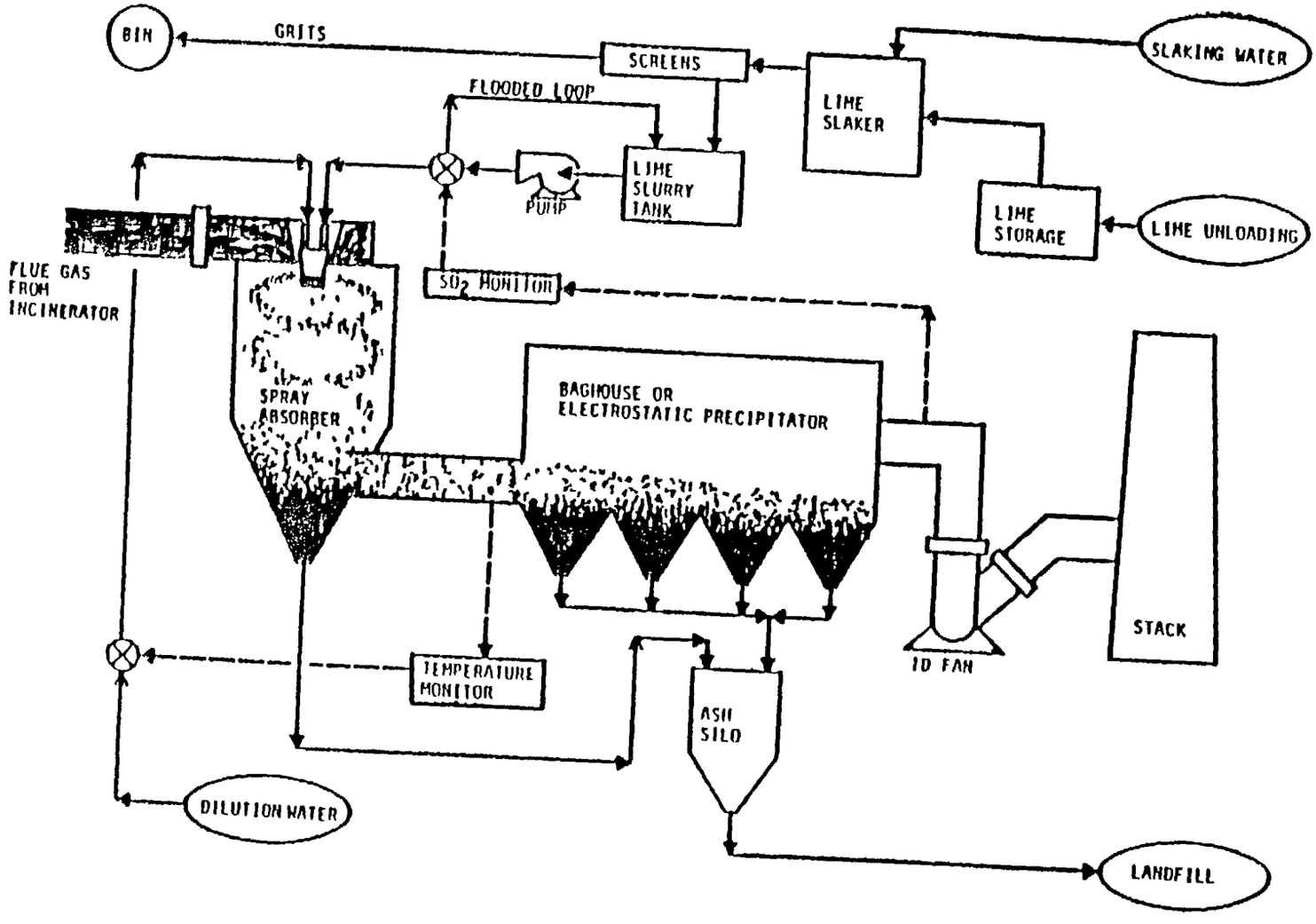

PROCESS FLOW DIAGRAM FOR A TYPICAL SPRAY DRYER FGD SYSTEM

Exhibit 3 4-6

FLS-Gas Suspension Absorber

The FLS miljø Gas Suspension Absorber is located between the incinerator or the cogeneration boiler and the dust and ash precipitator

It consists of

- A cylindrical reactor
- A separating cyclone incorporating a system for recycling separated material to the reactor
- A slurry preparation system which proportions the slurry to the reactor via a spray nozzle

A simple and effective process

The flue gases from the incinerator or boiler are fed into the bottom of the GSA reactor where they are mixed with the vaporized lime slurry

During the drying process in the reactor the lime slurry reacts with the acid flue gases thus capturing and neutralizing them

The partially cleaned flue gases are passed on via the separating cyclone to an electrostatic precipitator or a fabric filter which removes the dust and ash particles The flue gases which have now been cleaned according to requirements are then released into the atmosphere via the stack.

The solids containing the removed substances and residual lime are separated in the cyclone About 99 % of the solids are recirculated to the reactor via a screw conveyor while only about 1 % leave the system in the form of by product

The 99 % which is recirculated to the reactor is still partly reactive This means that the recirculated lime is still able to react with and neutralize the acid gases in the flue gas

In addition the fly ash in the flue gases makes a positive contribution to the neutralization process to a much higher degree than is the case in conventional semi dry flue gas cleaning plants

The GSA process means an extremely efficient utilization of the lime slurry and fly ash thus reducing requirements for fresh lime to a minimum

Gas suspension technology and recycling

One of the reasons for the high efficiency of the GSA process is that the absorber is based on gas suspension technology This means that a very large concentration of fly ash dust particles and lime builds up inside the reactor This concentration will normally be as high as 500 2 000 g/Nm³ (200 000 800 000 grains/scf) 50 100 times as much as in a conventional reactor

The effect is further enhanced by the fact that the lime fly ash and by-products are recycled about 100 times in the GSA system.

The high utilization efficiency of the absorbent through recycling means lower concentration of unreacted lime in the by product and thus a minimum of by product residue

Automatic process adjustment

An effective monitoring and control system automatically ensures the required level of cleaning while keeping lime consumption to an absolute minimum

The main parts of the system comprise three control loops

1 The first loop continuously controls the flow of circulating absorbent to the reactor based on monitoring of the amount of flue gas

The large reaction area and even distribution in the reactor of the absorbent provides for efficient mixing of the lime with the flue gas At the same time the large volume of dry material prevents the slurry from adhering to the sides of the reactor

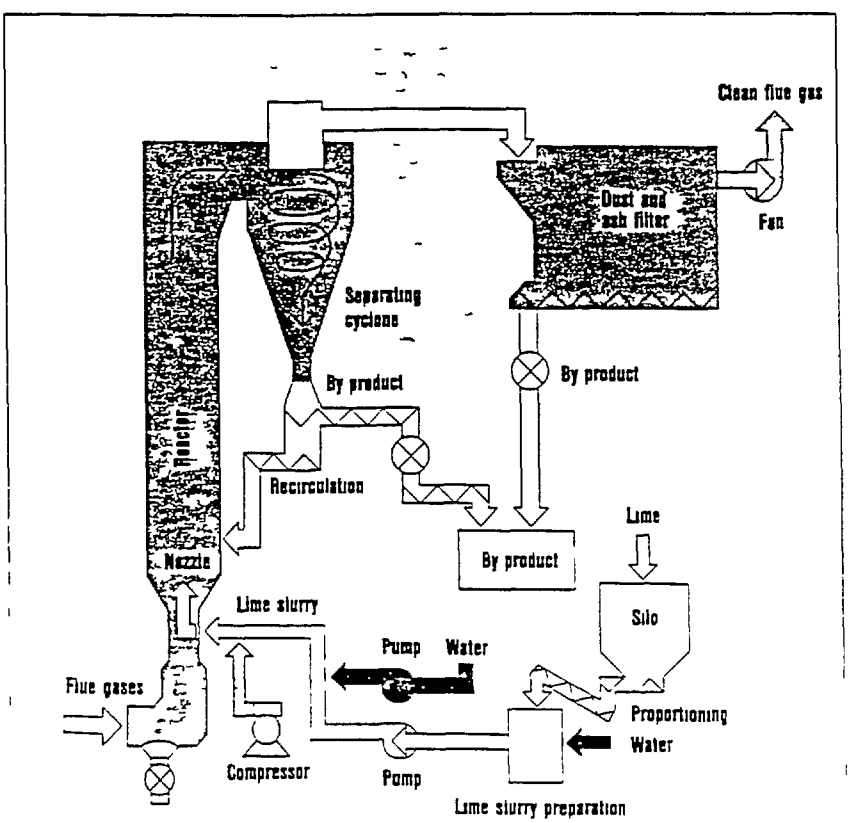

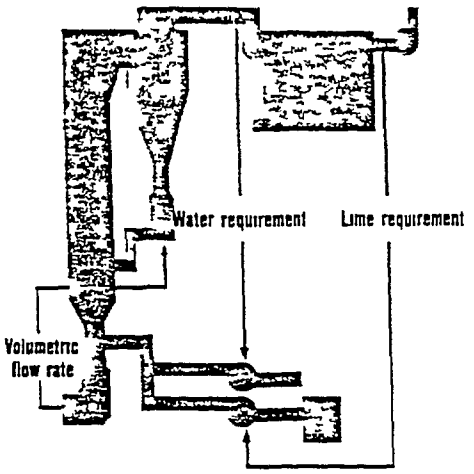

The three loops of the automatic process control system

2 The second control loop ensures that the flue gas is cooled down to a suitably low temperature in order to optimize the chemical processes This is achieved by the addition of extra water through the lime slurry nozzle

It is important that the amount of water sprayed into the system is always matched to the volume and temperature of the flue gas as a too low temperature means a risk of acid condensation

3 The third control loop controls lime addition This is done by monitoring the flow of flue gas and its acid content

These parameters are constantly monitored and are used by the control system to calculate the proportioning rate of the lime slurry pump

The FLS-GSA is the only acid gas clearing system on the market which proportions lime directly according to monitored results This further contributes to maintaining a low level of lime consumption

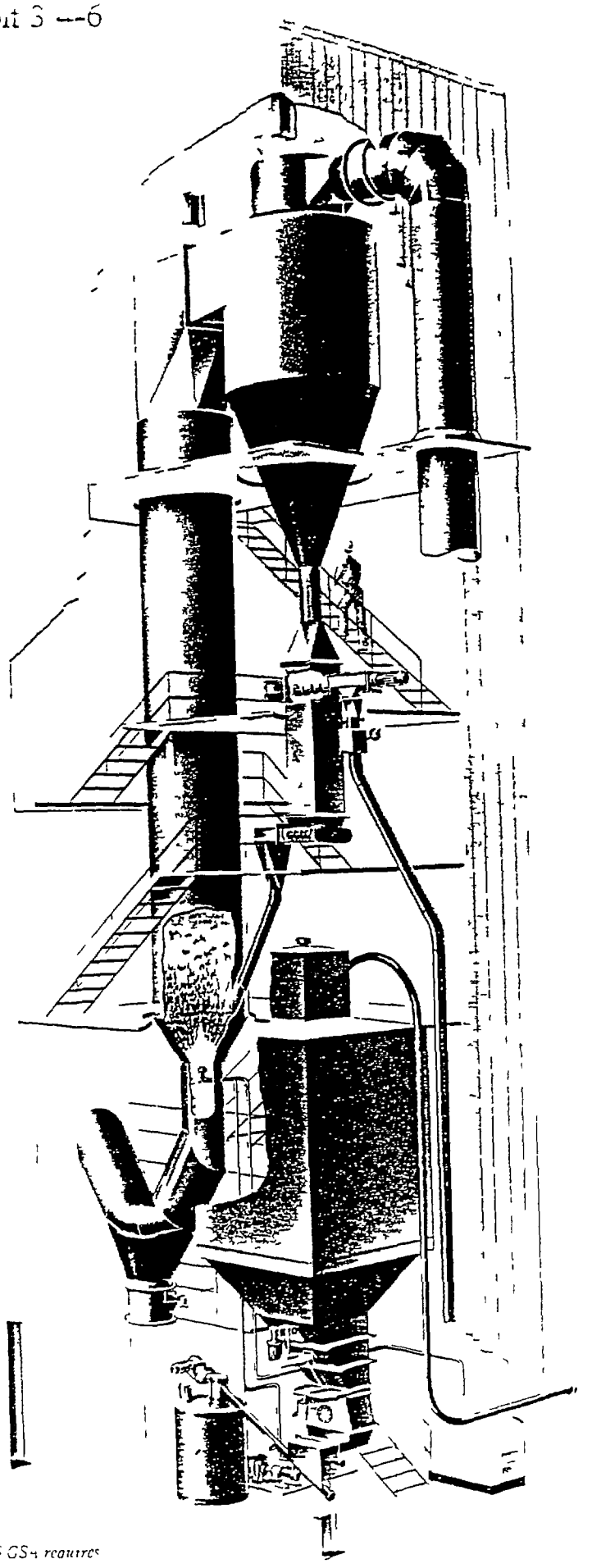

The compa [illegible] FLS GSA requires [illegible] ground space

Exhibit 3 4-7

Lime consumption and cleaning factor for SO_2 at coal-fired power stations with fabric filter and electrostatic precipitator respectively

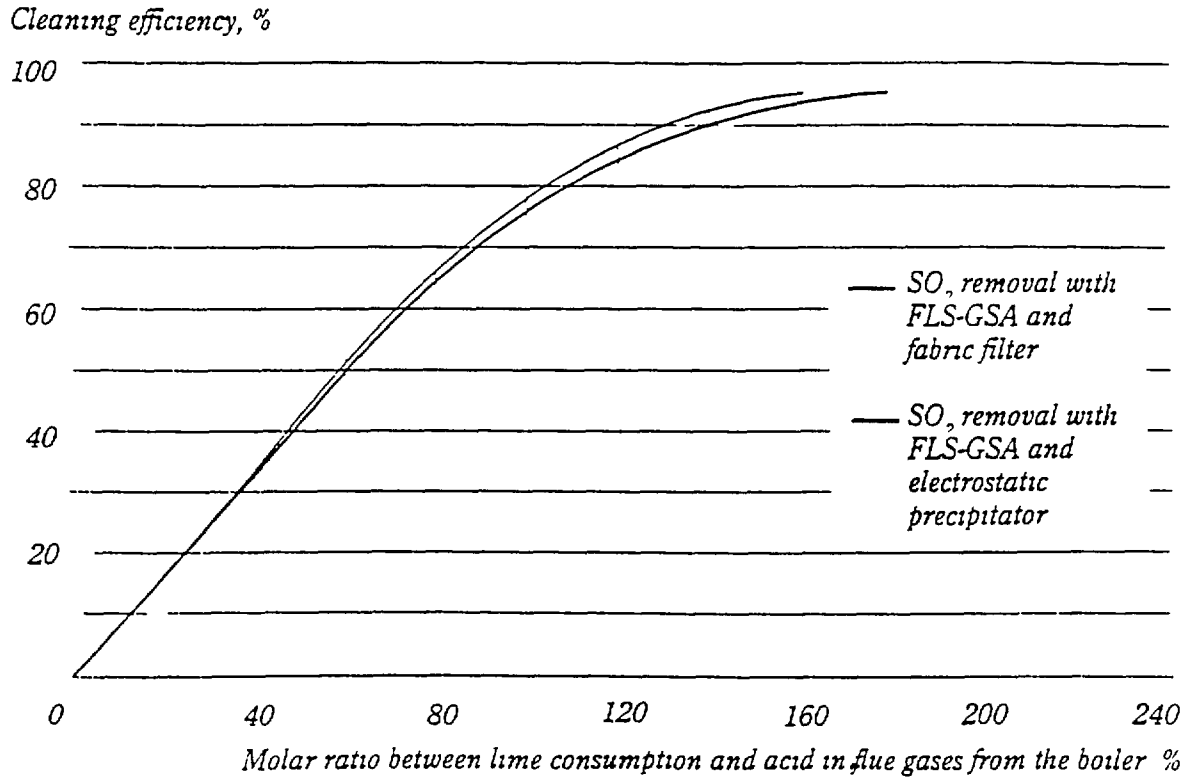

Exhibit 3 4-8

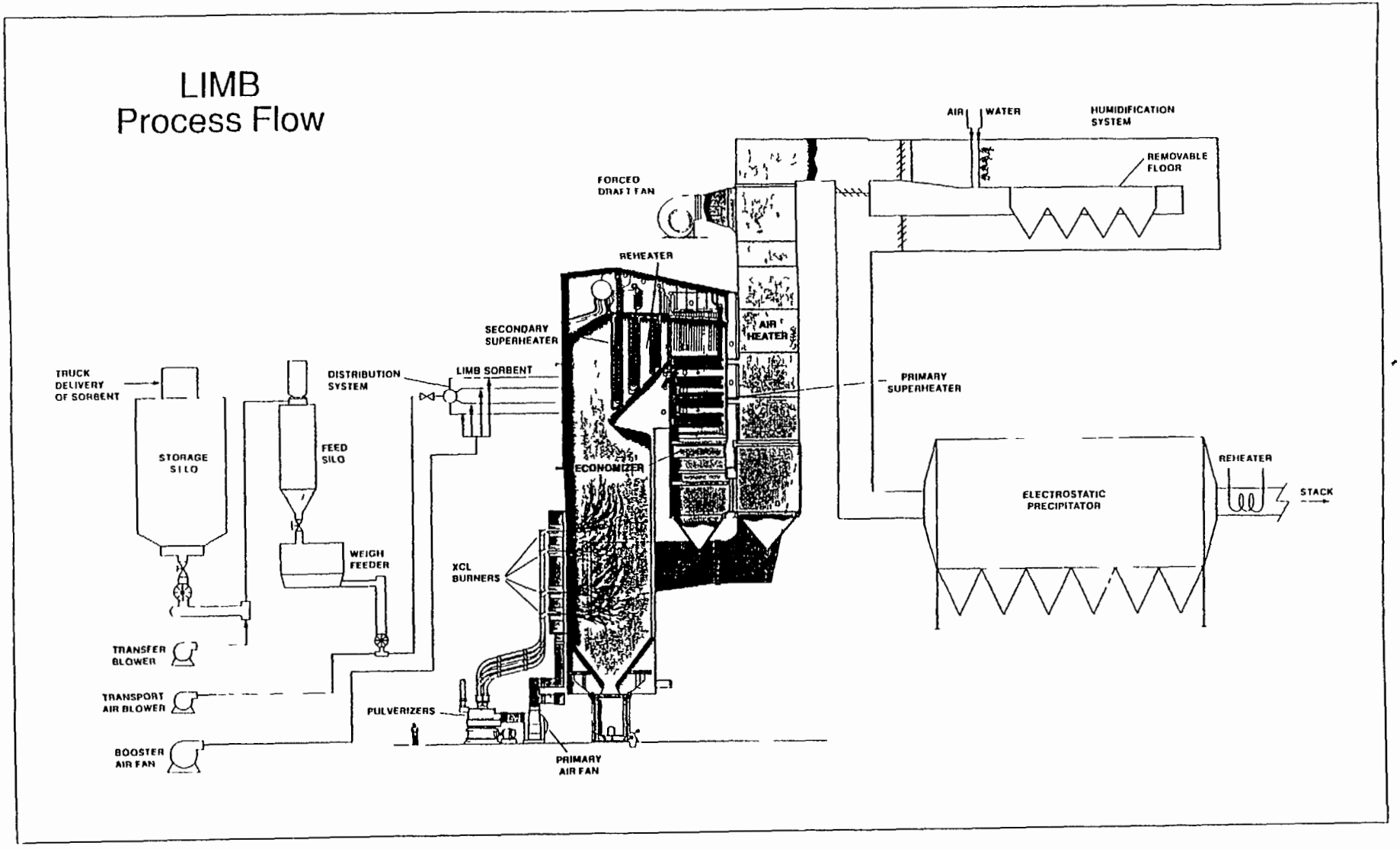
LIMB
Process Flow
TRUCK DELIVERY OF SORBENT
STORAGE SILO
FEED SILO
WEIGH FEEDER
TRANSFER BLOWER
TRANSPORT AIR BLOWER
BOOSTER AIR FAN
DISTRIBUTION SYSTEM
LIMB SORBENT
SECONDARY SUPERHEATER
REHEATER
FORCED DRAFT FAN
XCL BURNERS
PULVERIZERS
PRIMARY AIR FAN
ECONOMIZER
AIR HEATER
PRIMARY SUPERHEATER
AIR
WATER
HUMIDIFICATION SYSTEM
REMOVABLE FLOOR
ELECTROSTATIC PRECIPITATOR
REHEATER
STACK

Exhibit 3 4-9

TYPICAL FURNACE TIME-TEMPERATURE PROFILE

SORBENT INJECTION LOCATIONS "D" AND "E"

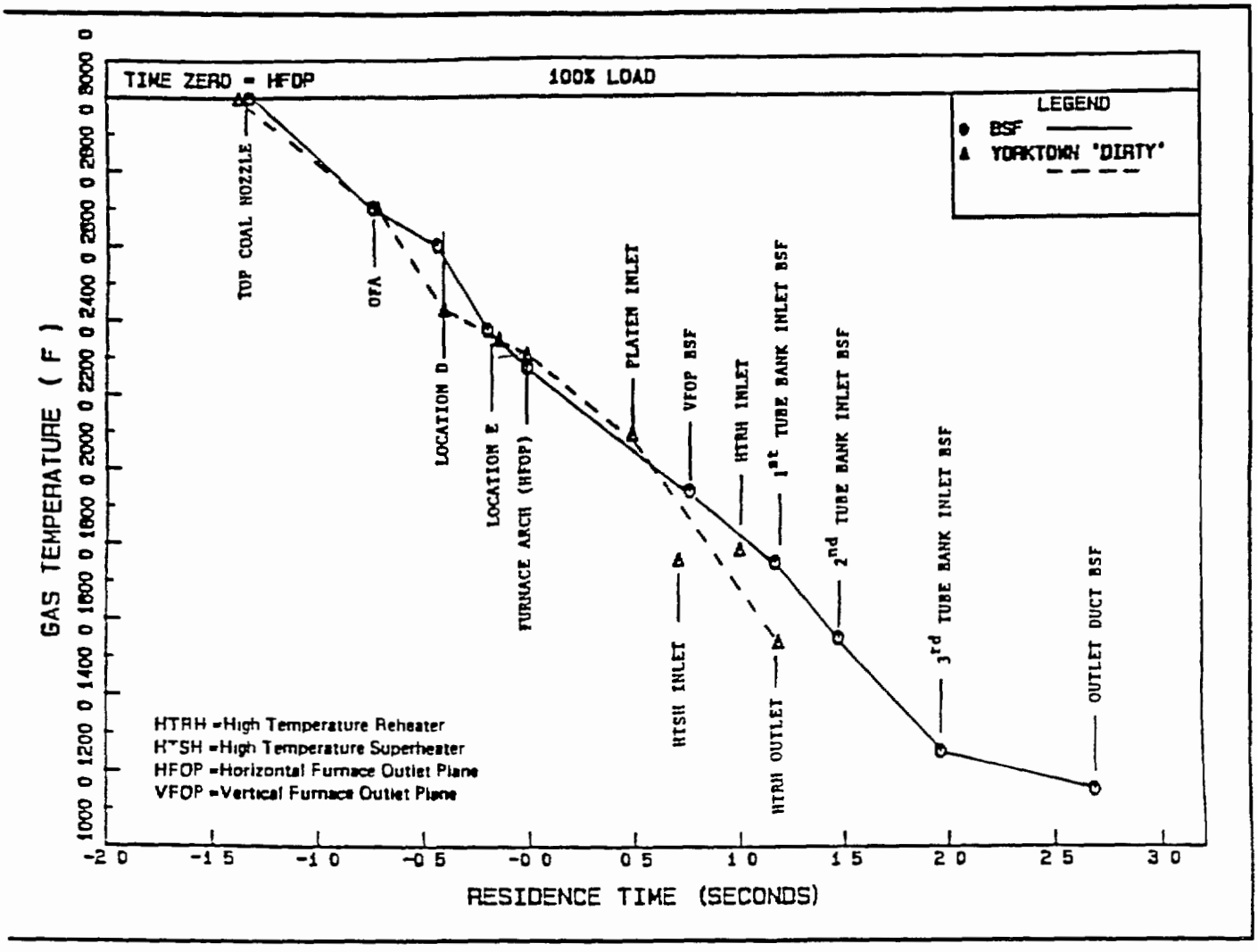

Exhibit 3 4-9

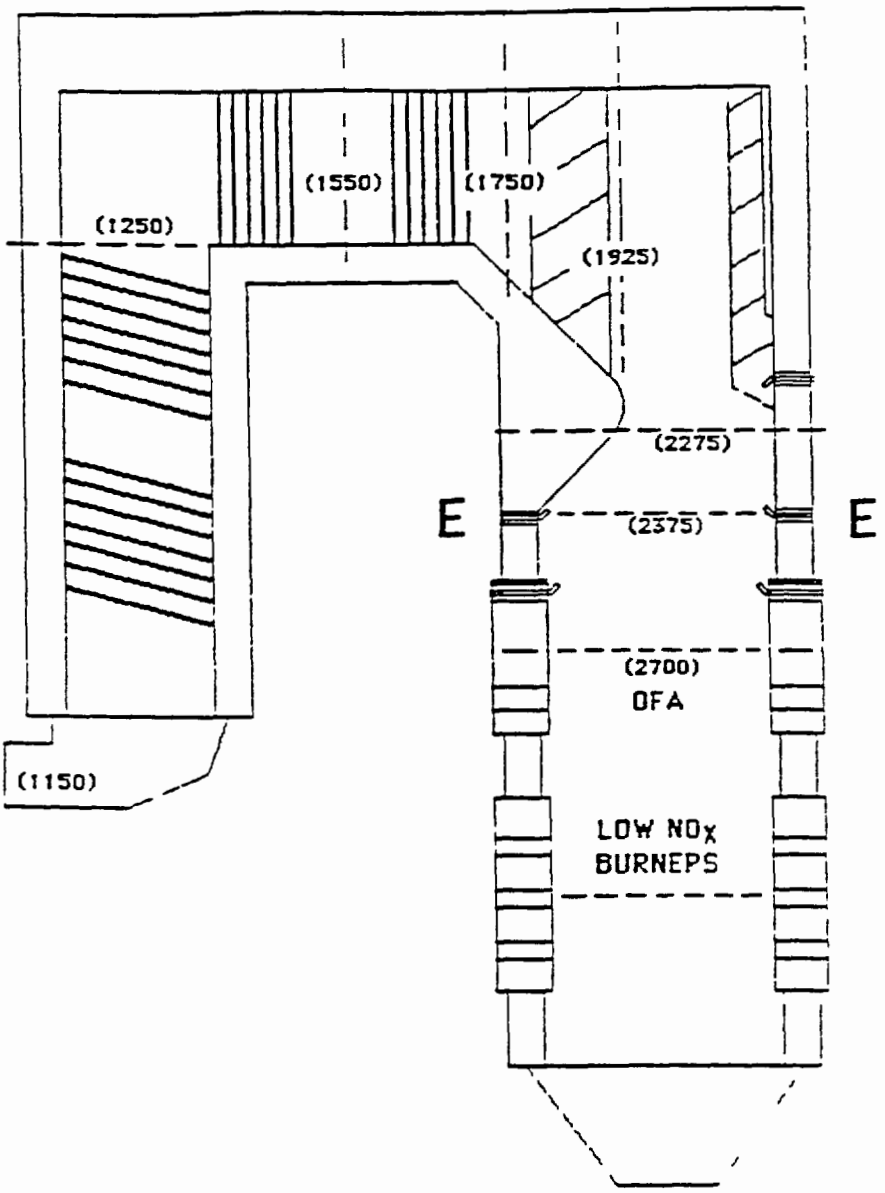

BSF GAS TEMPERATURES °F

100% LOAD

Exhibit 3 4-10

Table 2

SO_2 removal efficiencies for injection at 181 ft level at a 2 0 Ca/S ratio with minimal humidification

	Nominal coal sulfur, wt %		
Sorbent	**3 8**	**3 0**	**1.6**
Ligno lime	61	63*	53
Commercial calcitic lime	58	55*	51
Dolomitic lime	52	48	45
Limestone (80% < 44μm)	NT†	25	22

* Determined during the EPA LIMB Demonstration
† NT = Not tested

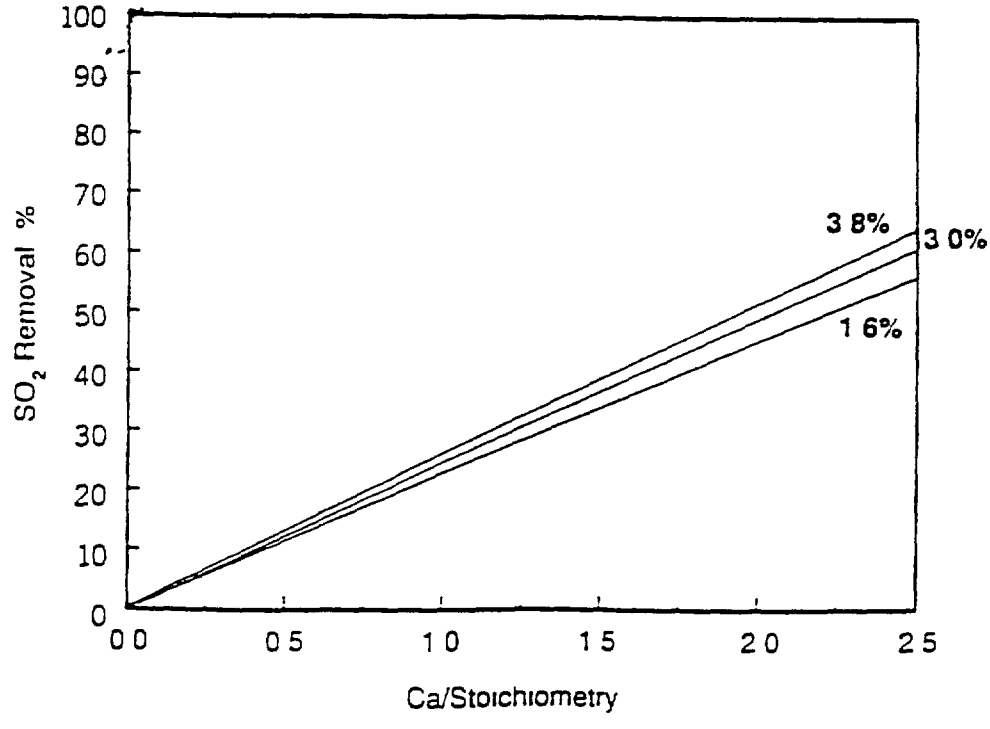

Fig 3 Effect of coal sulfur (SO_2) concentration on SO_2 removal while injecting dolomitic lime at elevation 187 ft

Exhibit 3 5-1

SULFUR OXIDES
POLLUTION PREVENTION AND CONTROL

Traditionally measures designed to reduce localized ground-level concentrations of SO_x utilized high level dispersion While these measures reduced localized health impacts it is now realized sulfur compounds travel long distances in the upper atmosphere and can cause damage far from the original source The long-term objective must therefore be to reduce total emissions

Approaches to Limit Ground-Level Ambient Concentrations

Location The extent to which SO_x emissions harm human health depends primarily on ground-level ambient concentrations numbers of people exposed, and the duration of exposure Source location can affect these parameters thus plant siting is a critical feature in any SO_x management strategy

Management The human health impacts of most concern are short-term exposure to SO_2 concentrations above 1000 micrograms per cubic meter (measured as a 10-minute average) Therefore a priority must be to limit exposures to peak concentrations Industrial sources of sulfur oxides should have emergency management plans to be implemented when concentrations are reach predetermined levels Emergency management plans may include actions such as using alternative low sulfur fuels or shutting down major emitters until conditions improve

Stack technology Traditionally ground-level ambient concentrations of sulfur dioxide were reduced by emitting gases through tall stacks Since this method does not address the problem of long-range depositions of sulfur and merely disperses the pollutant, **this strategy is no longer recommended** The accepted approach is to design stack height in accordance with Good Engineering Practice [for example see *40 Code of Federal Regulations* Part 50 100(ii)]

Approaches to Limit Emissions

The principle approaches to control SO_x emissions include use of low sulfur fuel sulfur reduction or removal use of appropriate combustion technologies and Flue Gas Desulfurization (FGD)

Choice of fuel Since sulfur emissions are proportional to the sulfur content of the fuel an effective means of reducing SO_x emissions is to burn low-sulfur fuel such as natural gas low-sulfur oil, or low-sulfur coal Natural gas has the added advantage of emitting no particulate matter when burned.

Fuel-cleaning. The most significant option for reducing the sulfur content of fuel is called beneficiation Much of the sulfur in high sulfur coals (up to 70 percent) is in pyritic or mineral sulfate form, not chemically bonded to the coal Coal beneficiation can remove 50 percent of *pyritic* sulfur and 20-30 percent of total sulfur (coal beneficiation is not effective in removing *organic* sulfur) It also removes ash responsible for particulate emissions as this approach may in some cases be cost-effective in controlling emissions of sulfur oxides but generate large quantities of solid waste and acid wastewaters which must be properly treated or disposed

Sulfur in oil can be removed with chemical desulfurization processes but this is not a widely used commercial technology

Combustion modifications. The two methods for controlling emissions of sulfur oxides through combustion modifications are fluidized-bed combustion (FBC) and sorbent injection. FBC uses a lime or dolomite bed in the combustion chamber The fluidized bed absorbs the sulfur oxides that are generated.

Sorbent injection involves adding an alkali compound to the coal combustion gases for reaction with the sulfur dioxide Typical calcium sorbents include lime and variants of this compound Sodium-based compounds are also used Sorbent injection processes remove 30 to 60 percent of sulfur oxide emissions

The information in this summary is for use by World Bank staff and consultants in carrying out the policies set out in OP 4 01 Environmental Assessment and related documents

Flue gas desulfurization The two basic methods of FGD systems are regenerable and throwaway Both methods may include wet or dry processes Currently, more than 90 percent of utility FGD systems use a wet throwaway system process

Throwaway systems use inexpensive scrubbing mediums which are cheaper to replace than to regenerate Regenerable systems on the other hand, use expensive sorbents which are recovered by stripping sulfur oxides from the scrubbing medium. These produce useful byproducts including sulfur sulfuric acid, and gypsum. Regenerable FGDs generally have higher capital costs than throwaway systems but lower waste disposal requirements and costs

In wet FGD processes flue gases are scrubbed in a liquid or liquid/solid slurry of lime or limestone Wet processes are highly efficient, and can achieve SO_x removal of 90 percent or more With dry scrubbing, solid sorbents capture the sulfur dioxide Dry systems have 70-90 percent SO_x removal efficiencies They have several advantages over wet processes They have lower capital and operating costs use less energy and water require less maintenance, and eliminate the need to handle sludge

The table below compares removal efficiencies and capital costs of SO_x emissions control systems

Comparison of SO_x Emissions Control Systems

System	*Percent SO_x Reduction*	*Capital Cost $/kW*
Sorbent injection	30 - 60	70 - 120
Dry flue gas desulfurization	70 - 90	50 - 220
Wet flue gas sulfurization	90	150 - 280

Source Kataoka, 1992

Monitoring

The three types of sulfur oxide monitoring systems are continuous spot sampling, and surrogate monitoring Continuous stack monitoring (CSM) involves sophisticated equipment which requires trained operators and careful maintenance Spot sampling is performed by drawing gas samples from the stack at regular intervals Surrogate monitoring uses operating parameters such as fuel sulfur content.

Recommendations

The traditional method of SO_x dispersion through high stacks is not recommended since it does not reduce total SO_x loads in the environment. Natural gas is the preferred fuel in areas where it is readily available and economical to use Methods of reducing SOx generation, such as fuel cleaning systems and combustion modifications should be examined. The implementation of these methods may avoid the need for FGD systems Prefer dry sulfur oxide removal systems over wet.

Further Information

The following are suggested as sources of additional information (these sources are provided for guidance and are not intended to be comprehensive)

Cooper C and F Alley 1986 *Air Pollution Control A Design Approach* Prospect Heights Illinois Waveland Press

Godish, Thad 1991 *Air Quality* Chelsea, Michigan Lewis Publishers

Kataoka, S 1992 Technical Note Coal Burning Plant and Emission Control Technologies

Stern C R Boubel D Turner and D Fox. 1984 *Fundamentals of Air Pollution* Orlando Florida Academic Press Inc

The information in this summary is for use by World Bank staff and consultants in carrying out the policies set out in OP 4 01 Environmental Assessment, and related documents

Stultz, S and J Kitto (eds) 1992 *Steam Its Generation and Use* Barberton, Ohio Babcock & Wilcox Company

Vatavuk, W 1990 *Estimating Costs of Air Pollution Control* Chelsea, Michigan Lewis Publishers

World Bank. 1992 "Steam Coal for Power and Industry Issues and Scenarios " Energy Series Working Paper No 58 Industry and Energy Department, Washington, D C

The information in this summary is for use by World Bank staff and consultants in carrying out the policies set out in OP 4 01 Environmental Assessment, and related documents

SECTION 4 - WASTE WATER TREATMENT TECHNOLOGY

4 1 Background

4 1 1 Effect of Pollutants in Waste Water

The effects of pollutants in waste water are strongly dependant on the type and toxicity of the specific pollutant and the steam into which it is being discharged Many chemicals have been identified which have been found to be harmful to marine life even in very small concentrations and this is especially true of certain organic compounds Waste products that are not fully oxidized may have a significant Chemical Oxygen Demand (COD) and may thereby reduce the oxygen content of the water, which is also harmful to marine life

Waste water generated during the operation of thermal power plants however, are primarily of the inorganic type with the toxicity of heavy metals of primary concern Toxicity of this type of pollutant is sometimes less apparent, with damage to the environment occuring slowly, over a long period of time

4 1 2 Regulation of Pollutant Concentrations in Discharge Water

In 1972 the Congress of the United States passed the Federal Water Pollution Control Act The 1972 law required all municipal and industrial waste water to be treated before being discharged into a waterway Under this law, the EPA was required to establish federal limits on the amounts of specific pollutants that could be released by municipal and industrial facilities

These "effluent limitations" were to be based on the level of cleanup that could be achieved using existing technologies and were to take into account how much it would cost The limits were to be written into "National Pollutant Discharge Elimination System" (NPDES) permits which would be issued to all dischargers

At present, the most serious of these pollution problems are excessive levels of toxic pollutants Toxic pollutants come both from specific dischargers and from contaminated runoff from "non-point" sources such as pesticides and fertilizers from farmland and oil and other pollutants from city streets

Standards for discharge (NPDES) have continued to be modified over the last 20 years and there are now water quality standard for more than 100 chemicals for discharge to both fresh and salt water The concentration limits usually provide both a maximum limit and a longer term, average discharge limit The US Congress is expected to amend the existing clean water regulations in the near future, and it is believed that this will result is additional limits on discharges from power plants

4 1 3 Discharge Limits

As described above, specific limits for waste water discharge depend upon the toxicity of the specific pollutant and the water into which it is discharged In addition, limits sometimes allow for the effect of a "mixing zone", where the discharged water is diluted by the accepting stream Since additional

specific discharge limits may be set by regional authorities and even these are under continuous review, it is impossible to provide a useful list of waste water discharge limits

The World Bank has issued liquid effluent limits for thermal power stations and these are listed below

PARAMETER	PRESENT LIMIT	PROPOSED LIMIT
pH	6 to 9	6 to 9
Total Suspended Solids	50 mg/l	50 mg/l
Oil and Grease	20 mg/l	10 mg/l
Total Residual Chlorine	0 5 mg/l	0 2 mg/l
Chromium (total)	-	0 5 mg/l
Chromium (+6)	-	0 1 mg/l
Copper	-	0 5 mg/l
Iron	-	1 0 mg/l
Nickel	-	0 5 mg/l
Zinc	-	0 5 mg/l
Heavy Metals, Total	10 mg/l	-
Temperature Increase	Max 5° C*	<3° C*

* Includes mixing zone thermal dilution

While these limits address only a few of the metals potentially present in waste water discharge, it should be noted that waste water treatment process, required to achieve these limits, will result in a significant reduction in the presence of other metal contaminants as well

Water discharge limits for Kazakstan are presented in Exhibit 4 1-1 These limits reflect allowable discharge water quality after dilution by mixing (1 km downstream of the point of discharge) Where the accepting body of water itself does not meet this quality, appropriate adjustments to the standards are made

4.2 Sources Of Waste Water And The Composition Of Each Systems

A variety of waste waters may be generated in the operation of a thermal power plant The major sources and their composition are identified in this section.

4 2 1 Waste Water from Condenser Cooling

In power plants with once-through condenser cooling systems, water is pumped from a lake river or ocean through the condensers and is discharged into the same body of water The composition of this water is not changed except for its temperature and the presence of biocides used to control condenser tube fouling

The temperature of once-through cooling water is generally increased by 5-10°C because of heat absorbed in the condenser, and this heat is rejected to the environment by the discharge of cooling water to the lake, river, or ocean Chlorine in the form of gas or sodium hypochlorite solution is the biocide almost always used, and is either injected in a shock dosage of about 3 milligrams per liter (mg/l) for 2 to 3 hours per day or continuously injected at a lower dosage such as 0 5 mg/l Some of the chlorine is consumed by reactions with organic compounds in the cooling water, but some chlorine also remains in the cooling water discharged

In power plants with cooling towers and recirculating cooling water systems, makeup water is pumped from a river, lake, or well to the cooling tower basin Recirculating cooling water is pumped from the cooling tower basin through the condensers to the top of cooling towers Heat absorbed in the condensers is rejected to the environment through evaporation of a portion of the recirculating cooling water and also through heat transfer from the recirculating cooling water to the air

Because some of the recirculating cooling water is continuously evaporated, the dissolved impurities become more concentrated and some portion of the recirculating cooling water must be continuously sent to waste as cooling tower blowdown Makeup water must be continuously added because of system losses from cooling tower blowdown and evaporation

Like once-through condenser cooling systems, a biocide such as chlorine is used to control condenser tube fouling in recirculating cooling water systems Again, it would either be injected in a shock dosage of about 3 milligrams per liter to 2 to 3 hours per day or continuously injected at a lower dosage such as 0 5 mg/l If cooling tower blowdown cannot contain chlorine due to environmental restrictions, cooling tower blowdown can be temporarily halted when chlorine is being injected in shock dosages After shock chlorination, the chlorine concentration gradually decays to zero over approximately one hour, and cooling tower blowdown can be resumed

4 2 2 Waste Water from Station Water Treatment Processes

4 2 2 1 Filter Backwash

When boiler feedwater makeup is supplied from a lake or a river, a pretreatment system is needed to remove suspended solids Backwash water from granular media (sand or anthracite) filters is sometimes recovered and sometimes discharged as wastewater Its composition is the same as the lake or river except for a higher concentration of suspended solids

4 2 2 2 Makeup Demineralizer Regeneration Waste

The high pressure boilers in electric generating stations require high purity makeup water essentially free of dissolved impurities, and this water is usually produced by an ion exchange system When ion exchange materials are exhausted a portion of the system is removed from service and regenerated by backwashing, chemical injection (sulfuric acid for cation exchange material and sodium hydroxide for anion exchange material) chemical displacement and rinsing

The sulfuric acid and sodium hydroxide which are not consumed in the regeneration will neutralize each other, but the combined wastewater is almost always acidic or alkaline and needs to be further neutralized The combined wastewater is comprised mostly of dissolved sodium sulfate (H_2SO_4+2NaOH → Na_2SO_4+2H_2O) and also contains the dissolved impurities which were removed from the boiler feedwater makeup Total dissolved impurities are generally in the range of 5,000 to 10,000 mg/l

4 2 2 3 Condensate Polisher Regeneration Waste

Condensate polishing systems make use of ion exchange materials similar to the makeup demineralizer system Waste water from condensate polisher regeneration is the same as makeup demineralizer regeneration waste except for the presence of iron and copper oxides and ammonia

Unlike makeup demineralizers, condensate polishers are designed to remove suspended solids The suspended solids in condensate are iron and copper oxides from corrosion within the boiler-turbine cycle, and these are removed from the ion exchange materials during regeneration Ammonia is often added to the condensate to control corrosion and is removed by cation exchange material in a condensate polisher When the cation exchange material is regenerated with sulfuric acid, ammonia will be present in the regenerant waste in the form of ammonium sulfate $(NH_4)_2SO_4$, usually at a concentration of approximately 400 mg/l

4 2 2 4 Boiler Blowdown and Other Boiler and Turbine Building Drains

Because of the evaporation of water into steam, high purity feedwater is concentrated approximately 100 times in a boiler Continuous blowdown from the steam drum contains approximately 25 mg/l of total dissolved solids, and these are mostly sodium hydroxide (NaOH) Sodium phosphate, Na_3PO_4, is also present when the power plant does not have a condensate polisher and phosphate treatment is used in the boiler Boiler blowdown can also contain as much as 1-2 mg/l of iron and copper oxides

Other boiler and turbine building drains can include waste water from a variety of sources including leakage from pump seals, equipment drains, and equipment washdown At times, these drains may contain significant concentrations of oil

4 2 2 5 Air Heater and Fireside Wash Waste Water

Most coal fired power stations are provided with equipment to spray water over the air heater and other fireside areas in the boiler and thereby remove deposits which are not removed by

sootblowing Although air heater and fireside wash only occur intermittently when the boiler is out of service, these washes can generate a large volume of waste water In some power plants the flow is as high as 1700 gpm (385 m^3/hr)for as much as 1 to 2 hours

Air heater and fireside wash waste water can contain 1000 to 20,000 mg/l of dissolved solids 100-4000 mg/l of iron, 0-100 mg/l of any of a variety of heavy metals (aluminum, zinc chromium, lead cadmium and others), and 2000 to 3000 mg/l of sulfates Sulfates are generated by the oxidation of sulfur during combustion These lower the pH of air heater and fireside wash waste water to a range of 2 to 4

4 2 4 6 Coal Pile Runoff

At power plants where the rain water runoff from coal storage piles cannot be allowed to percolate into the ground for environmental reasons or where the ground is naturally impermeable, coal pile runoff is a source of waste water The composition of coal pile runoff is very variable for the following reasons

A higher quantity of suspended solids will be washed away from soft coals than from hard coals

- A higher quantity of suspended solids will be washed away from soft coals than from hard coals
- Coal which has been exposed to rain water followed by freezing and thawing will generate a higher quantity of suspended solids
- Coal with a high ash content will cause the runoff to be higher in total dissolved solids than low ash coal
- Runoff from high sulfur coal will have a lower pH than low sulfur coal
- Runoff with a low pH will dissolve a higher quantity of heavy metals than runoff with a high pH
- Coal which has previously been exposed to rain water will generate a lower quantity of impurities than coal which has not been exposed to rain water

4 2 2 7 Ash Handling Waste Water

The quantity of ash handling waste water generated depends upon the specific design of each ash handling system These facilities can be designed to minimize the quantity of waste water generated

Three examples of bottom ash handling systems are as follows

a Ash can be conveyed away from the bottom of the boiler as a 1% slurry in water by means of centrifugal or jet pumps with ash being allowed to settle in a pond Ash pond overflow can then be treated

b Ash can be conveyed away from the boiler as described above and ash pond overflow can be reused to convey more ash This reduces the quantity of waste water to be treated

c Ash can be conveyed away from the boiler as a 20% slurry in water by means of a drag chain conveyor In this type of system ash disposal area overflow is only a result of rainfall thereby further reducing the quantity of waste water to be treated

Fly ash can be transferred to a disposal area by mixing it with the bottom ash slurry described in examples a) and b) above It can also be transferred on mechanical conveyors after it has been wetted, and this will also reduce the quantity of ash handling waste water generated

Like coal pile runoff, the composition of ash handling waste water is very variable and depends on the specific characteristics of the ash at each power plant It is similar to coal pile runoff because ash has a similar composition to the coal being used except that the carbon and sulfur have been burned off Because much of the sulfur has been burned off, ash handling waste water tends to be less acidic than coal pile runoff, and because it is less acidic, smaller quantities of heavy metals tend to dissolve into it from the ash. A summary of the ranges of impurities which can be expected is presented in Exhibit 4 2-1

4 2 2 8 Roof and Yard Drainage

The drainage from some outdoor areas, such as around transformers and oil storage tanks can potentially be contaminated with oil, and the drainage system is usually divided so that these waste waters can be treated separately Roof and yard drainage from other areas is generally not expected to contain pollutants

4 2 2 9 Sanitary Waste Water

The sanitary waste water at a power plant will have a composition similar to typical municipal waste water as shown below

Biochemical Oxygen Demand, BOD	200-400 mg/l
Chemical Oxygen Demand, COD	500-800 mg/l
Total Suspended Solids, TSS	200-400 mg/l
pH	7-8
Ammonia, NH_4 as N	20-35 mg/l

4 2 2 10 Boiler Water-Side Chemical Cleaning Waste Water

Boiler water-side chemical cleaning is required when deposits consisting of iron, copper, hardness salts, or other compounds inhibit heat transfer across boiler tubes, and occurs about once every 2 to 5 years Chemicals used for cleaning are ammoniated solutions of either hydrochloric acid, citric acid, or EDTA (ethylene diamine tetra-acetic acid) The resulting waste water is a combination of these chemicals, ammonia, and the deposits which have been removed After chemicals are drained from the boiler, it is usually rinsed several times, and the rinse also becomes a waste water

4 2 2 11 Flue Gas Desulfurization (FGD) Waste Water

If the plant includes a wet flue gas desulfurization system, a waste water blowdown stream mav be generated (depending on the type of FGD system and the chloride concentration in the coal) Typical characteristics of these waste waters are shown in Exhibit 4 2-2

4.3 Methods Of Treatment

4 3 1 General

The methods of treating waste water vary from one power plant to another The following is a summary of the most common approaches used in recent U S power plants

- Condenser cooling waste water - no treatment
- Filter backwash - treated in central waste water treatment system (CWTS)
- Makeup demineralizer regeneration waste - treated in CWTS
- Condensate polisher regeneration waste - treated in CWTS
- Boiler blowdown - treated in CWTS
- Boiler and turbine building drains - treated in an oil/water separator followed by the CWTS
- Air heater and fireside wash water - treated in the CWTS
- Coal pile runoff - treated in CWTS
- Ash handling waste water - treated in CWTS
- Roof and yard drainage - yard drainage potentially contaminated with oil is treated in an oil/water separator, other roof and yard drainage is not treated
- Sanitary waste water - treated in a packaged, extended aeration, biological treatment system
- Boiler water-side chemical cleaning waste water - treated in CWTS
- Flue gas desulfurization waste water - treated in a CWTS or a separate system very similar to the CWTS described below

4 3 2 Central Waste Water Treatment System (CWTS)

A summary of the processes usually included in a central waste water treatment system is as follows

1 Equalization
2 pH Elevation
3 Oxidation
4 Coagulation
5 Sulfide Precipitation
6 Clarification
7 Granular Media Filtration

8 pH Adjustment
9 Sludge Dewatering

The CWTS usually includes an **Equalization Basin** which receives the various waste waters described previously This basin has three main functions

1 To dampen the effect of high instantaneous flowrate waste waters such as air heater wash and allow its treatment at a lower flowrate

2 To allow for some self neutralization of various waste waters (for example ash handling water can be alkaline and coal pile runoff can be acidic)

3 To dampen the effect of high instantaneous concentrations of a particular pollutant and allow the CWTS to treat a waste water with more uniform characteristics

pH Elevation to approximately 9 5 is accomplished by the addition of either lime - $Ca(OH)_2$ or sodium hydroxide - NaOH One of these two chemicals is added to a tank with a retention time of about 10 minutes and a mechanical mixer pH elevation serves two purposes (1) most of the heavy metals such as nickel, cadmium, arsenic, cobalt, lead, selenium, and zinc are precipitated from solution as hydroxides, and become suspended solids instead of dissolved solids, (2) iron and manganese are more easily oxidized This precipitation of heavy metals is described in Exhibit 4 3-1

Oxidation is accomplished by bubbling air through spargers in a tank with a retention time of approximately 10 minutes Most of the iron and manganese precipitate from solution as oxides and become suspended solids instead of dissolved solids

Coagulation is accomplished by adding a solution of ferric sulfate to a tank with a retention time of about 10 minutes and equipped with a mechanical mixer Iron hydroxide precipitates from solution and causes small suspended particles to agglomerate into larger suspended particles Larger suspended particles will settle more rapidly in the downstream clarification equipment Sometimes a coagulant aid or polymer is also added to enhance the coagulation process

Sulfide Precipitation is accomplished by adding either sodium sulfide - NaS or an organic sulfide to a tank with a retention time of about 10 minutes Most of the heavy metals which did not precipitate from solution as hydroxides are precipitated as sulfides which further reduces the concentrations of heavy metals in solution

Clarification is accomplished either in a conventional clarifier or a parallel plate separator Most of the suspended solids originally present in the various wastewaters, as well as the suspended solids created by the precipitation of heavy metals, iron, and manganese, settle out and are removed from the waste water

A portion of the suspended solids (approximately 5-10 mg/l) are not removed by clarification, and these are further reduced (to about 1 mg/l) by granular media filtration **Granular Media Filtration** is accomplished by passing clarified waste water through a bed of anthracite and sand Filter backwash is usually returned to the equalization basin

Because the waste water pH was elevated for heavy metal hydroxide precipitation, it is too alkaline to be discharged and the pH must be reduced to a range of 6 to 9 **pH Adjustment** is accomplished by adding either sulfuric or hydrochloric acid to a tank with a retention time of about 10 minutes and a mechanical mixer Treated waste water is either mixed with the discharged condenser cooling water or it is directly discharged to a lake, river or ocean through a submerged diffuser

When suspended solids settle in a clarifier or parallel plate separator, a 1 to 3% sludge is created This sludge may be directly discharged to the ash disposal area or it may be **Dewatered** by means of a belt press or filter press Dewatered solids are disposed in a landfill and filtrate is returned to the equalization basin

By means of the processes described above, a central waste water treatment system neutralizes acidic and alkaline waste waters to an acceptable pH range, removes heavy metals, removes iron and manganese, and removes suspended solids Typical Waste Water Treatment Flow Diagrams are presented in Exhibit 4 3-2

4 3 3 Oil/Water Separation

An oil/water separator functions by passing waste water downward through a series of inclined, parallel plates Small oil deposits rise a short distance to the underside of each plate, come into contact with other small oil droplets, rise to a quiescent compartment above the plates, and drain through a connection near the top of this compartment Emulsion breaking chemicals may be added to aid in this process Exhibit 4 3-3 illustrates this system

4 3 4 Extended Aeration Biological Treatment

In an extended aeration biological treatment system, sanitary waste water is aerated to allow aerobic bacteria to grow to a sufficient mass to consume organic contaminants Soluble and insoluble organic contaminants are converted to the mass of bacteria cells and are then separated in a clarifier Clarifier overflow is usually disinfected with chlorine

The resulting effluent will have a BODs of about 20-30 mg/l and total suspended solids of about 20 mg/l

4.5 Comparison of Alternative Technologies

The waste water treatment technologies described in this section have been developed by system suppliers to meet the requirements of most discharge standards Where special conditions exist and certain discharge limits can not be achieved by these treatment technologies, it may be necessary to provide a post treatment step to address a specific pollutant

Where soluble species, chloride for example, must be limited, alternate approaches may be required Water treatment technologies which concentrate and evaporate waste water streams provide the possibility of eliminating the water discharge completely (zero discharge systems) Such systems are expensive and extremely energy intensive and are considered only in very unusual circumstances

Waste water discharge standards should be carefully considered to avoid the requirements for such systems

SECTION 4 EXHIBITS

Exhibit 4 1-1

Exhibit 4 2-1

Exhibit 4 2-2

Exhibit 4 3-1

Exhibit 4 3-2

Exhibit 4 3-3

Exhibit 4 1-1

ПРЕДЕЛЬНО ДОПУСТИМЫЕ КОНЦЕНТРАЦИИ ЗАГРЯЗНЯЮЩИХ ВЕЩЕСТВ
В ПРОИЗВОДСТВЕННЫХ СТОЧНЫХ ВОДАХ НА ПРЕДПРИЯТИЯХ ЭЛЕКТРЕТИКИ
(СанПиН N4630-88)

ПОКАЗАТЕЛЬ ЗАГРЯЗНЕНИЯ	ПДК мг/л
Хлориды	350
Сульфаты	500
Железо	0,3
Медь	1,0
Цинк	0,05
Нефтепродукты	0,3
Никель	0,1
Нитраты	45
Нитриты	3,3
Ртуть	0,0005
Сухой остаток	1000
Фенолы	0,001
Фториды	1,5
Цинк	1,0
Ванадий	0,1
Водородный показатель	6,5-8,5
БПК полное	не должно превышать при 20 С -3,0 мгО2/л
ХПК	не должно превышать 15,0 мгО2/л
Взвешенные вещества	не должно увеличиваться больше, чем на 0,25-0,75
Температура	Летняя температура не должна повышаться более чем на 3 С
Растворенный кислород	не менее 4

Exhibit 4 2-1

Expected Ranges of Impurities in Waste Water Streams

Parameter	Coal Pile Runnoff	Ash Handling Waste Water
pH	2 3-6 0	3 4-13 3
Total Dissolved Solids	1 000-20,000 mg/l	500-3000 mg/l
Calcium Ca	90-1300 mg/l	50-1000 mg/l
Magnesium Mg	0-100 mg/l	10-100 mg/l
Sodium, Na	0-3 000 mg/l	0-1500 mg/l
Iron Fe	0-1800 mg/l	0-700 mg/l
Manganese, Mn	0-50 mg/l	0-5 mg/l
Aluminum, Al	0-500 mg/l	0-10 mg/l
Arsenic As	0-20 mg/l	0-1 mg/l
Cadmium Cd	0-40 mg/l	0-1 mg/l
Chromium, Cr	0-2 mg/l	0-1 mg/l
Cobalt, Co	0-50 mg/l	0-5 mg/l
Copper, Cu	0-100 mg/l	0-5 mg/l
Lead, Pb	0-3 mg/l	0-5 mg/l
Mercury Hg	0-1 mg/l	0-1 mg/l
Nickel, Ni	0-15 mg/l	0-1 mg/l
Selenium, Se	0-1 mg/l	0-1 mg/l
Silica, SiO_2	0-80 mg/l	0-50 mg/l
Zinc, Zn	0-150 mg/l	0-5 mg/l
Chlorides, Cl	0-2000 mg/l	0-1000 mg/l
Sulfates SO_4	0-10,000 mg/l	0-1000 mg/l
Total Suspended Solids	0-2300 mg/l	10-2000 mg/l

Exhibit 4 2-2

Expected Ranges of Impurities in Flue Gas Desulfurization System Waste Water Streams

pH,	4-7
Chloride, Cl	10 000-40 000 mg/l
Sulfate SO_4	1 500-8 000 mg/l
Nitrate, NO_3	300-1,400 mg/l
Fluoride, F	30-200 mg/l
Calcium, Ca	4,000-20 000 mg/l
Manganese, Mn	200-5,600 mg/l
Sodium, Na	75-1,200 mg/l
Iron, Fe	30-400 mg/l
Aluminum, Al	50-800 mg/l
Arsenic, As	0 05-3 0 mg/l
Boron, B	20-40 mg/l
Cadmium, Cd	0 04-0 5 mg/l
Cobalt, Co	0 05-0 4 mg/l
Chromium, Cr	0 3-5 0 mg/l
Copper, Ca	0 1-0 85 mg/l
Mercury, Hg	0 2-6 0 mg/l
Lead, Pb	0 1-3 0 mg/l
Selenium Se	0 2-1 0 mg/l
Zinc Zn	0 4-8 0 mg/l
Ammonium, NH_4	50 mg/l
COD	100-150 mg/l
Total Suspended Solids	300-10,000 mg/l

Heavy metals removal

Most heavy metals found in waste-treatment processes are in the inorganic form, but there are certain industries where they appear as organic compounds. Here, the technical methods that are in general use are discussed, and the optimum treatment systems for specific metals are described.

Kenneth H. Lanouette, Industrial Pollution Control, Inc.

Heavy metals is the classification that is generally applied to those metals of particular concern in the treatment of industrial wastewaters: copper, silver, zinc, cadmium, mercury, lead, chromium, iron and nickel. Other metals that may be considered part of this category are tin, arsenic, selenium, molybdenum, cobalt, manganese and aluminum.

Most heavy metals found in waste treatment processes are in the inorganic form. However, in some industries such as textiles and dyeing, heavy metals are in the organic form. Treatment technology is different for these two forms.

Inorganic heavy metals

The most common method for removal of inorganic heavy metals is chemical precipitation. Typical estimates of final concentration levels obtainable by chemical precipitation are shown in Table I [1].

Metals precipitate at various pH levels depending on such factors as the metal itself, the insoluble salt that has been formed (e.g. hydroxide, carbonate, sulfide, etc.), presence of complexing agents such as ammonia, citric acid, ethylenediamine tetraacetic acid (EDTA), etc. Theoretical precipitation curves for various metals as hydroxides are shown in Fig. 1 [2].

It is apparent that when two or more heavy metals are found in the same waste stream, the optimum pH for precipitation may be different for each ion. The question then becomes whether it is possible and practical to precipitate one or more of the metals separately at the source at one pH and treat the remaining stream at another pH.

Alternatively, it must be determined if one pH can be found which will produce satisfactory—though not optimum—insolubility for each of the metal ions present in the wastewater.

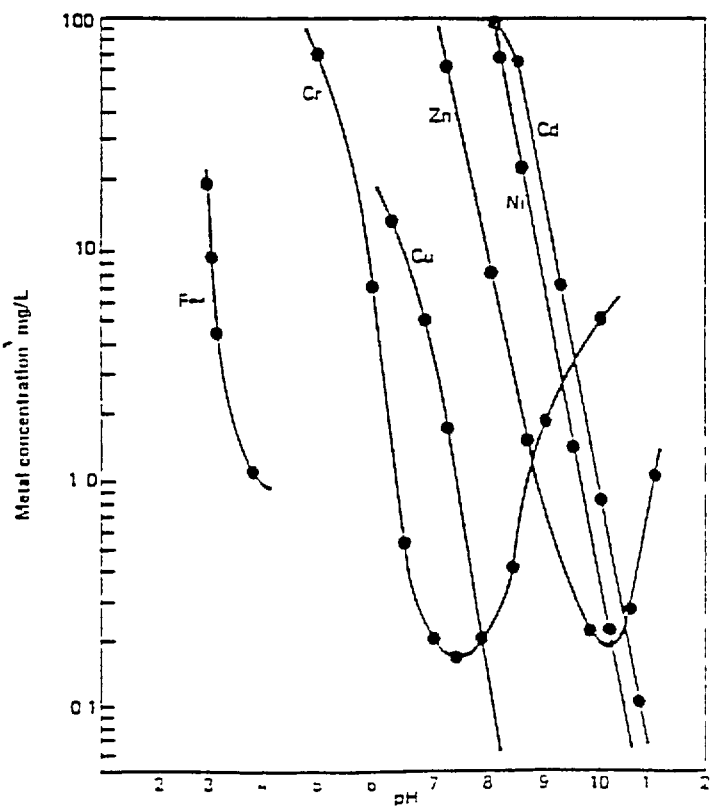

Precipitation of heavy metals as hydroxide

Fig.

Exhibit 4 3-2

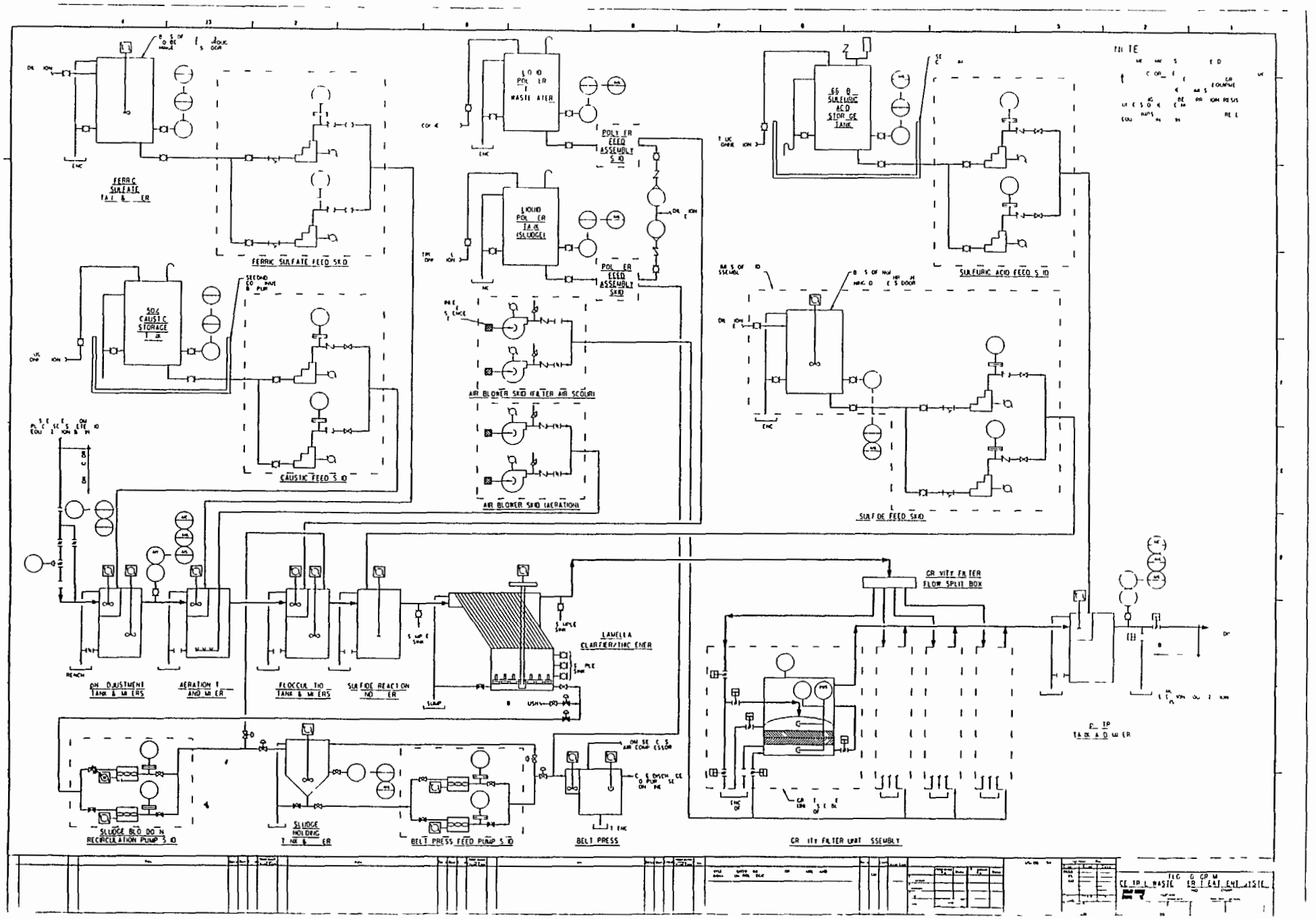
FERRIC SULFATE TANK & PUMPER
FERRIC SULFATE FEED SKID
50% CAUSTIC STORAGE TANK
CAUSTIC FEED SKID
LIQUID POLYMER TANK (WASTE WATER)
POLYMER FEED ASSEMBLY SKID
LIQUID POLYMER TANK (SLUDGE)
POLYMER FEED ASSEMBLY SKID
AIR BLOWER SKID (WATER AIR SCOUR)
AIR BLOWER SKID (AERATION)
66 B SULFURIC ACID STORAGE TANK
SULFURIC ACID FEED SKID
SULFIDE FEED SKID
NOTE
PH ADJUSTMENT TANK & MIXERS
AERATION TANK AND MIXER
FLOCCULATION TANKS & MIXERS
SULFIDE REACTION MIXER
LAMELLA CLARIFIER/THICKENER
GRAVITY FILTER FLOW SPLIT BOX
SLUDGE BLOWDOWN RECIRCULATION PUMP SKID
SLUDGE HOLDING TANK & MIXER
BELT PRESS FEED PUMP SKID
BELT PRESS
GRAVITY FILTER UNIT ASSEMBLY
EQUIP TANK AND MIXER

Exhibit 4 3-2

Utility Waste Treament Ash Pond Overflow

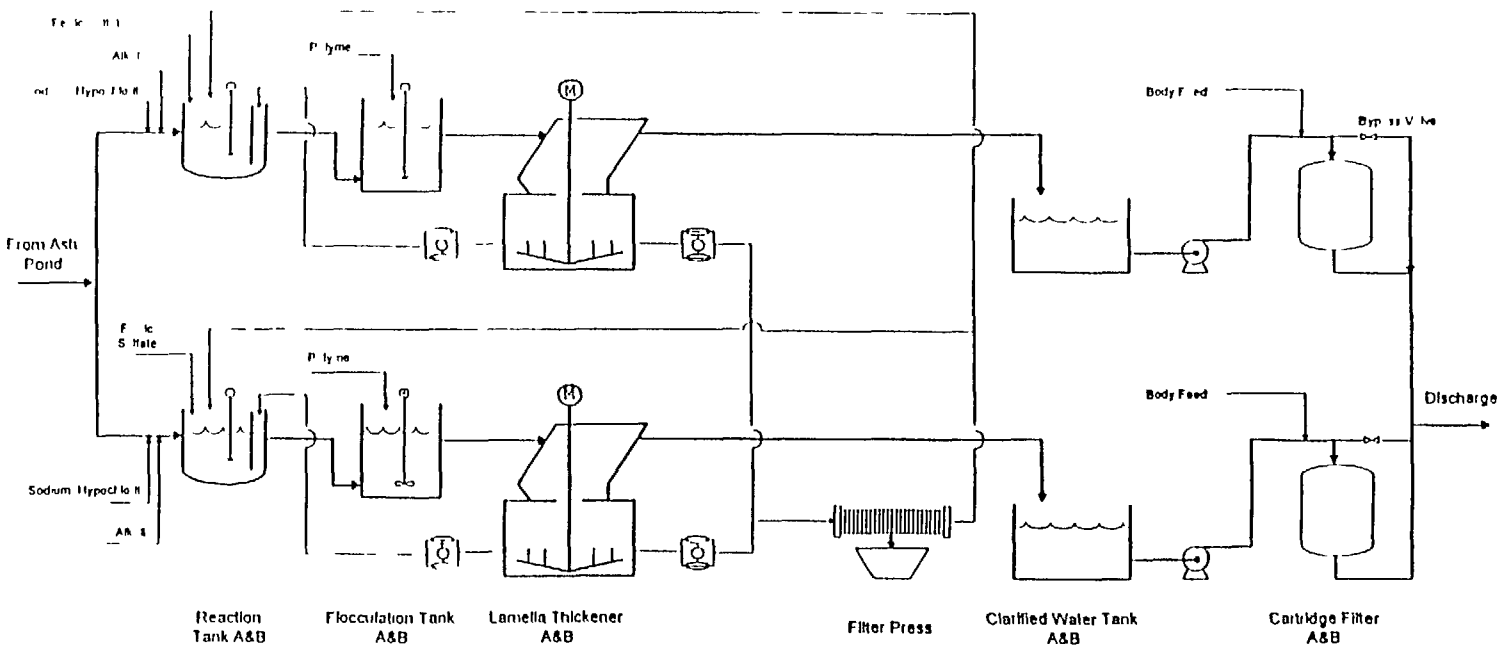

GRAVER WASTE - SBU

UTILITY ASH POND TREATMENT

SOLUTION:

This system was originally designed utilizing a sludge blanket or solids contact type clarifier After careful review and testing a lamella clarifier thickener was proposed and installed This approach saved the end user a significant amount of capital costs and also reduced the building area by over 50% The project was completed including start up in under 15 months and system performance is better than anticipated

The untreated ash pond stream is pumped to a Chemical Reaction Tank where the pH is increased by adding an alkali An inorganic coagulant and an oxidant are also added to chemically condition the inlet stream Adding alkali starts to precipitate the background constituents including the iron Ferric sulfate is added to insure that there will be enough iron to lower the trace metals concentrations Coprecipitation/ab sorption mechanisms entrap and remove the trace metal constituents

As the conditioned stream exits the reaction tank fresh con centrated liquid sludge is mixed with the stream The liquid sludge is recycled from the bottom of the lamella thickener The mixed stream enters the Floc Tank where polymer is added to promote the formation of a dense floc The complete stream is mixed using low intensity mixing The stream flows by gravity to the clarifier

The clarifier thickener is a lamella type unit which utilizes the projected settling area created by the lamella plates to provide surfaces for the floc to settle on The stream is distributed onto the lamella plates where the floc only has a short distance to settle before it is out of the water stream Treated water flows by gravity from the lamella unit to the Clarified Water Storage Tank before being pumped to discharge If the treated water is not within the specified discharge criteria the water can be pumped through a Cartridge Filter The cartridge elements are capable of removing very small micron size particulate and will insure that the treated water quality does not exceed discharge criteria

Floc collected on the lamella plates moves down the surfaces of the plates under the forces of gravity When the solids reach the end of the plate they fall into the thickener compartment The solids compress as more material accumulates increasing the dry solids concentration in the blowdown stream A scraper with thickening pickets slowly moves through the sludge bed providing a path for water to escape and increasing the dry solids concentration of the liquid sludge The scraper also asures positive removal of sludge

The liquid sludge is further treated using a recessed plate Filter Press The liquid sludge is periodically pumped directly to the press The solids are captured and form a filter cake which is periodically removed from the press The Filter Press is de signed and controlled so that filter cake dry solids concentra tion are in the 25% by weight range The filtrate stream is recycled to the front of the treatment plant

The ultimate goal for this facility was to move toward zero discharge water balance where as much of the water as possible be reused within the plant without compromising unit integrity Additional equipment could easily be added later if TDS or other constituents become a consideration

Exhibit 4 3-2

DESIGN COMPOSITION:

FLUE GAS DESULFURIZATION PURGE WATER

As Ion - PPM	Untreated	Treated
Chloride	20,000	20,000
TSS	7,500 - 12,500	30
pH	5.5 - 6.0	6.0 - 9.0
Fluoride	5 - 45	15
Chromium	1 - 2	0.5
Iron	100	1
Selenium	2.5	0.05 - 0.75
COD	50 - 100	100

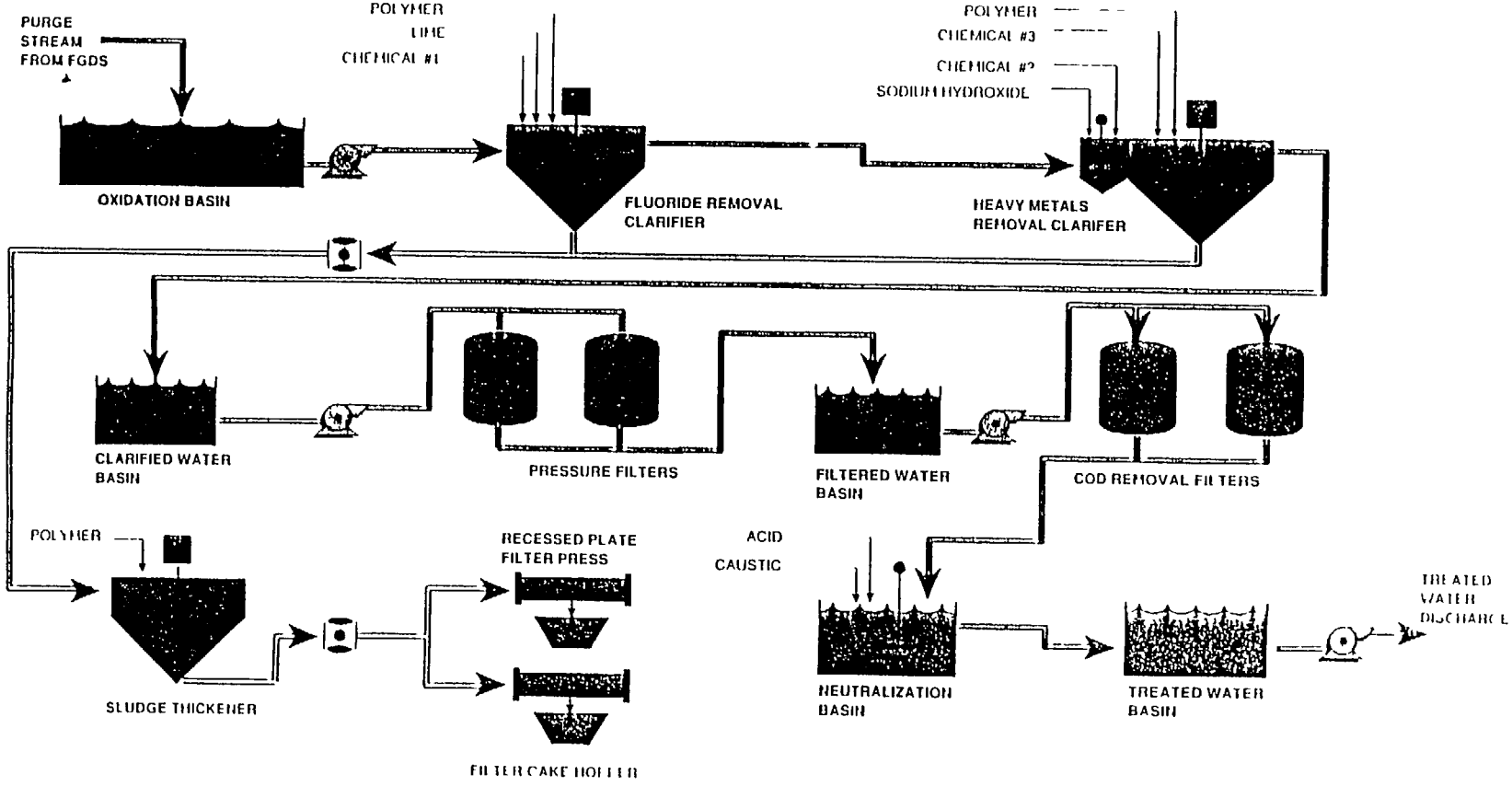

Exhibit 4 3-2

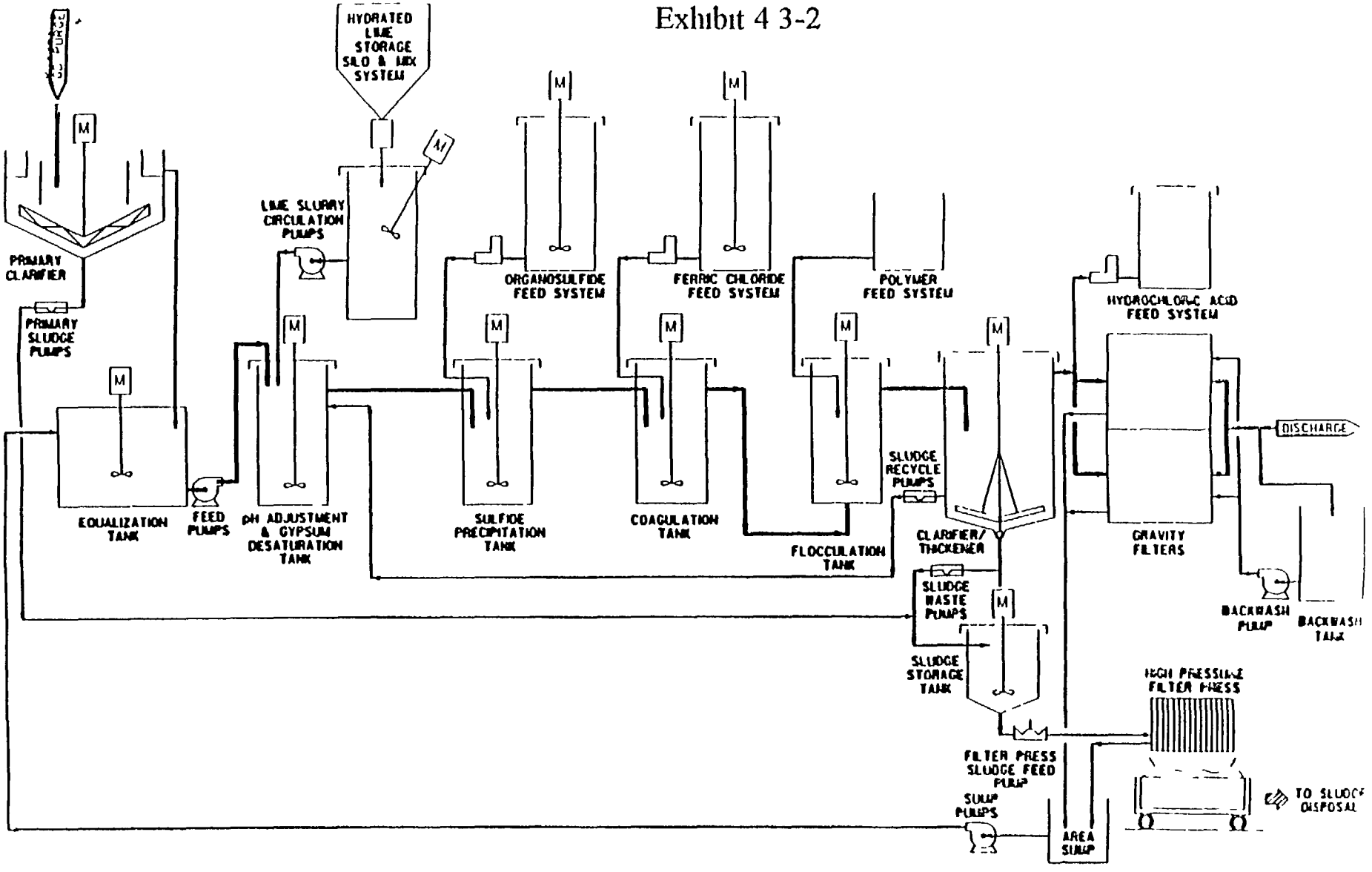

FGD WASTEWATER TREATMENT SYSTEM

SLANT RIB COALESCING OIL/WATER SEPARATOR

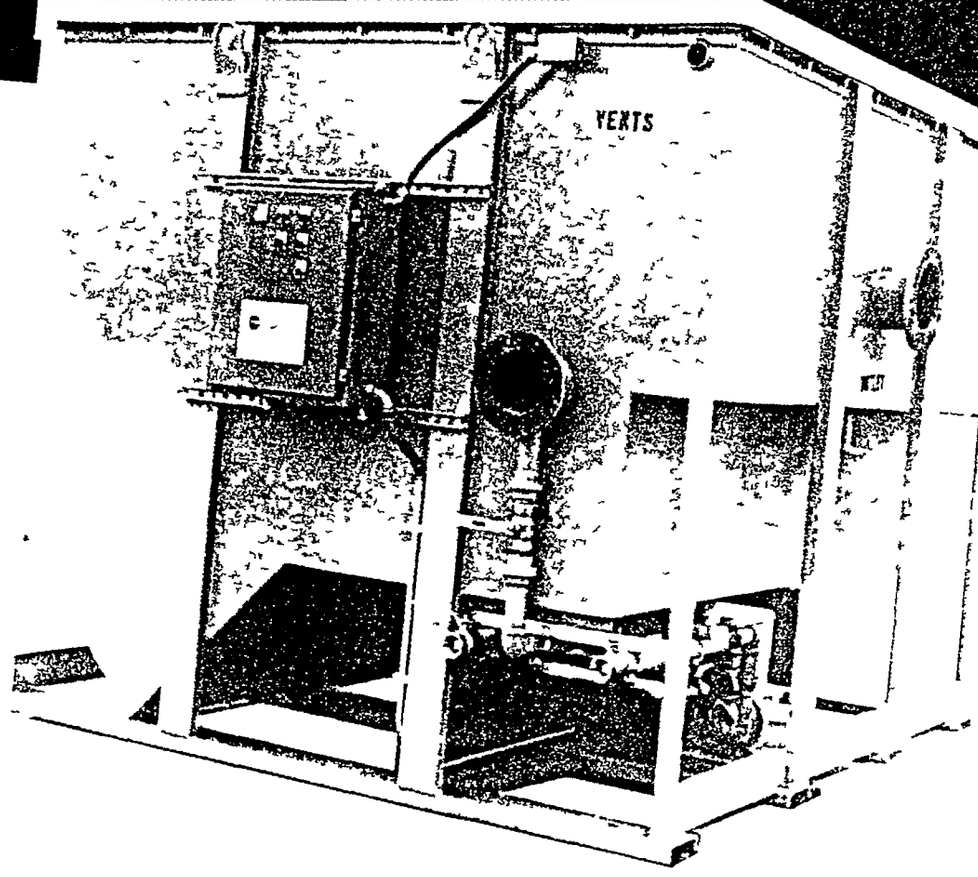

GREAT LAKES ENVIRONMENTAL

The Slant Rib Coalescing Separator is a highly effective gravity separator for the removal of dispersed oil and solids from water.

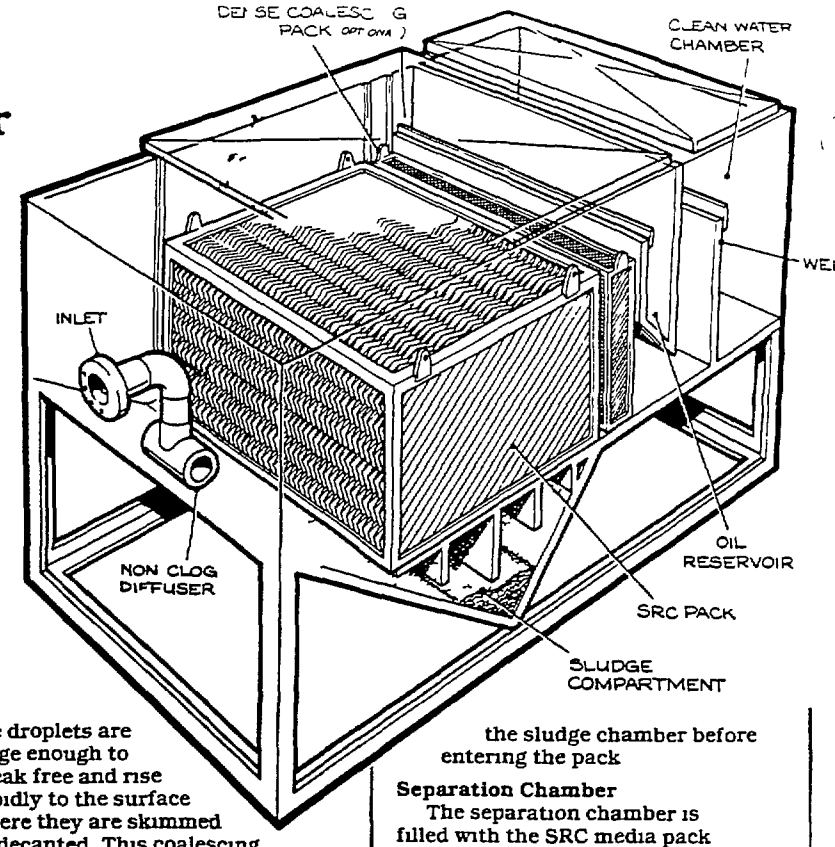

GENERAL INFORMATION

The Great Lakes Slant Rib Coalescing (SRC) Separators are capable of effectively separating oils and solids from water where the oil and solids have a specific gravity different than that of water The SRC performance is superior to other gravity coalescing units for the separation of dispersed oil and settleable solids Effluent concentrations of dispersed oil are less than 10 mg/L The SRC Separators are ½ the volume and as little as ⅓ the length of straight gravity separators

The Slant Rib Coalescers are installed in rectangular tanks containing special baffles and weirs designed to direct flow skim oil and control the liquid levels in the separator Pitched sludge compartments are provided below the separation chamber for easy sludge removal

The separators are available in standard models with capacities from 5 GPM TO 5000 GPM They can be installed above grade flush with grade or below grade as required The separators can operate entirely by gravity or pumps can be supplied for product or effluent transfer when required

DESIGN

When certain materials are placed in the waste water flow removal efficiencies of oil increase due to impingement on their surfaces Plastic media is particularly effective because of its oleophilic (oil attracting) characteristics As fine oil droplets impinge upon or pass close to the plastic surface they are attracted to it and adhere Additional droplets continue to be attracted and coalesce or merge with previous droplets to produce much larger droplets At a point the droplets are large enough to break free and rise rapidly to the surface where they are skimmed or decanted This coalescing action allows removal of smaller droplets than is possible with a straight gravity separator

The effectiveness of any particular coalescing media is governed by several variables density available surface area velocity and direction of flow and shape of the media All of these variables influence the potential contact area so it becomes of particular importance to form the media properly to maximize contact while minimizing blinding The Slant Rib Coalescing (SRC) media pack was designed with consideration of all these factors The SRC media provides greater coalescing and solids separation area than any other media currently available The patented shape and specific spacing of the plates provides maximum protection from blinding while providing a series of inclines that enhance solids separation and a tortuous path through which the water must pass This continuous change of direction insures a high degree of oil droplet contact on the plate surface with resultant coalescence and oil removal The ribs are slanted toward the surface in the direction of flow encouraging separated oil to float to the surface along the plates before breaking free

OPERATION

Inlet and Diffusion Chamber

Flow enters the inlet chamber where it is dispersed through a non clog diffuser across the width and depth of the media pack Larger solids drop out here into the sludge chamber before entering the pack

Separation Chamber

The separation chamber is filled with the SRC media pack The ribbed plates are arranged vertically in the direction of flow

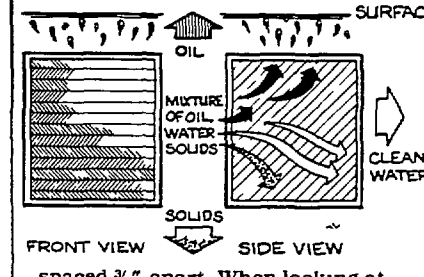

spaced ¾" apart When looking at the side of the media pack the ribs run from the bottom of the inlet side to the top of the outlet side on a 45° angle The depth of the ribs is more than twice the distance of the spacing creating an overlap condition This causes the flow to zig zag around 90 corners throughout the pack causing resistance to flow collisions of the droplets 20 microns and larger with the plates and coalescence The coalesced oil has the least restricted path to exit the waste stream and slides to the surface on the underside of the rib

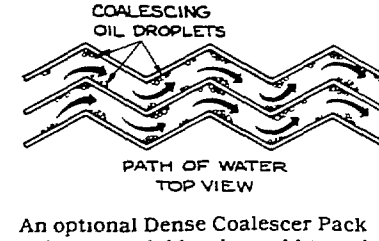

An optional Dense Coalescer Pack (DCP) is available when additional polishing is desired

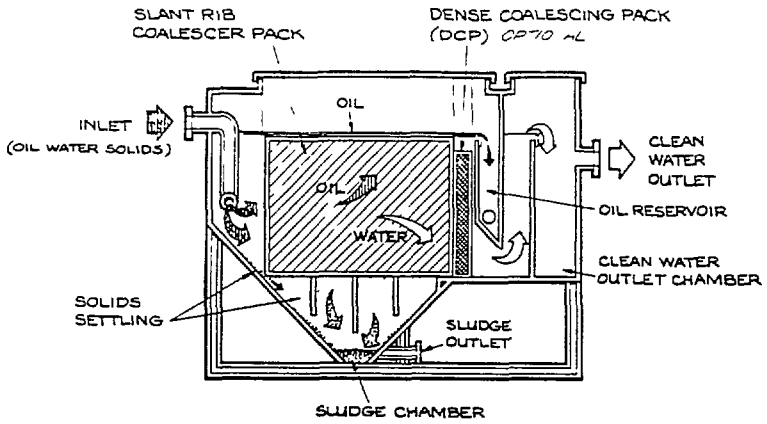

SLANT RIB COALESCING SEPARATOR

Solids entering the pack encounter a 55° angle of inclination created by the ribs which is optimum for solids settling The solids slide down the top of the rib and fall to the next rib gathering mass and velocity as they near the bottom of the pack and drop into the sludge chamber The horizontal projected area of the top side of the ribs provides a conservative 0 20 GPM per square foot separation rate at design loadings

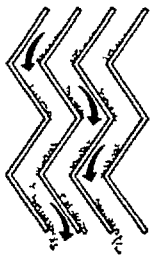

SOLIDS SETTLING
FRONT VIEW

Sludge Chamber

The sludge chamber is located directly beneath the separation chamber and provides adequate volume for the settled sludge The sides of the sludge chamber are sloped 45 to insure easy and complete removal of the sludge

Oil Removal

The separated oil accumulates at the surface of the separation chamber where it displaces the water As the oil layer increases oil spills over a weir into an oil reservoir where it can flow by gravity or be pumped automatically to remote storage tanks

Clean Water Chamber

The clean water leaving the SRC media pack passes under an oil retention baffle and into the effluent or clean water chamber From there the clean water passes over a weir which maintains the liquid level in the separator The clean water flows by gravity through a pipe outlet or effluent pumps can be provided

Covers

Hatches are provided for easy access into the separator Sealed vapor tight hatches are available Lifting lugs are provided on the media packs and on the separator

MATERIALS OF CONSTRUCTION

Materials of construction include 3/16 1/4 thick A36 carbon steel stainless steel and fiberglass The standard Slant Rib Coalescing Media is polyvinylchloride (PVC) which is highly oleophilic The media can also be supplied in

Polypropylene (POLP)
Chlorinated Polyvinylchloride (CPVC)
304 Stainless Steel
316 Stainless Steel
Carbon Steel

Plate spacings of 1/4 1/2 3/4 1 2 are available for special applications

Fiberglass separators are single piece molded construction with side reinforcement

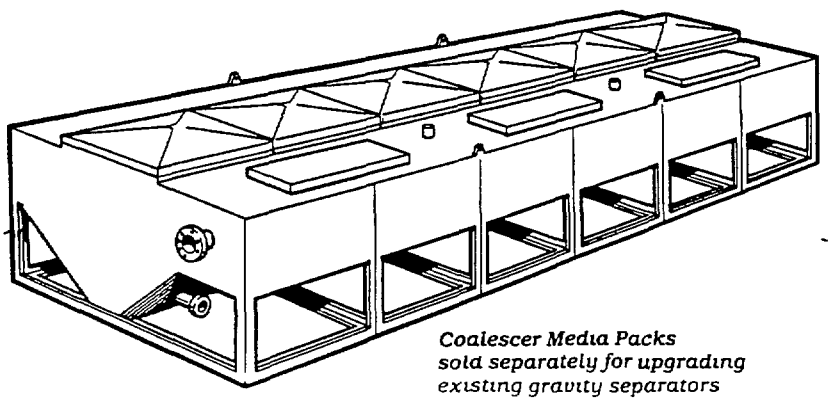

Coalescer Media Packs sold separately for upgrading existing gravity separators

COATINGS

Above grade carbon steel tanks are coated on the exterior with an epoxy primer and urethane overcoat for excellent weather and chemical resistance Interior surfaces are lined with coal tar epoxy which has resistance to a wide variety of chemical environments and pH swings Special interior and exterior coatings are available

AVAILABLE OPTIONS

Inlet Feed Pumps—
Coalescing media of polypropylene CPVC carbon steel and stainless steel
Water Pump Out System
Recovered Oil Pump Out System
Heaters for freeze protection
Dense Coalescing Pack
Sludge Pump Out System
External Oil Reservoir
Design flexibility to satisfy your application

APPLICATIONS

Automotive
Airports
Bus Terminals
Bulk Plants
Chemical Plants
Fabricated Metal Plants
Glass Factories
Ground Water
Military Bases
Oil Fields
Petroleum Plants/Refineries
Pulp and Paper Mills
Parking Lots
Railroad Yards
Textile Mills
Tramp Oil
Truck Terminals
Utility Companies
Wash Racks

For further information contact Great Lakes Environmental Inc or our local representative We will be glad to assist you in selecting a properly sized unit for your application

GREAT LAKES

SECTION 5 - DISPOSAL OF SOLID WASTE PRODUCTS (FLY ASH)

5 1 Background

5 1 1 Effect of Solid Wastes

A coal fired thermal power station may produce a number of solid waste products requiring disposal By far, the major solid waste product is the non-combustible mineral matter portion of the fuel which is collected as fly ash and bottom ash following the combustion process

Effects of this solid particulate material on the environment and methods of collection of the fly ash have been described in Section 1 Since significant investment is required to ensure the particulate material is removed from the flue gas and collected, and not released into the environment, it is important to dispose of the collected solids in a manner that will prevent the material from impacting the environment

Bottom ash, on the other hand, is usually in a physical form which does not contribute to dust production and which is far more resistant to the leaching of metals by contact with water Alternative disposal methods may be considered for this waste product

5 1 2 Regulation of Solid Waste Disposal

As described in Section 1, ambient air quality standards are generally established to limit the allowable concentration of particulates Once collected, the ash particles must be transported and stored in a manner which will prevent the discharge of dust particles into the atmosphere Control of fugitive dusting then is an important consideration in the design and operation of fly ash disposal systems

The need to protect water quality has also been addressed previously (Section 4) and the effect of contact between ash and water on the quality of the water has also been described In fact, waste water treatment facilities are frequently required to remove metals and other contaminants from water which has been in contact with ash, before the water can be discharged into the environment

Key considerations in the design of an ash disposal system then are

- Prevention of the ash, or dust, itself from entering the atmosphere
- Prevention of water which has contacted the ash from contaminating surface or ground water

Regulations regarding disposal of solid wastes from power plants generally address these requirements Since quantities of ash produced from a large power station may be huge, with quantities ranging to millions of tonnes per year, treatment of the fly ash to reduce its potential to damage to the environment is not considered feasible The approach to regulation therefore has addressed the design requirements for the solid waste disposal area, with the objective of limiting, to the maximum extent possible, contact between the ash and water which may become contaminated by contact with the ash

5 2 Ash Disposal Alternatives

Where quantities of ash produced are small and the power station is located in an industrial area where the construction industry is active, a part or all of the ash produced may find a suitable use in this construction activity Even where this environment does not exist, consideration should be given to potential use of the bottom ash as aggregate, in road construction and as a potential fill material to improve drainage In most cases, however, it is necessary to dispose of the the majority of ash produced in a landfill of some type Exhibit 5 2-1 indicates the possible alternatives in the design of an ash collection, transportation and disposal system

5 2 1 Wet Ash Disposal Systems

Wet ash disposal systems hydraulically transport ash from the power station to an ash disposal pond or ponds which function as a large settling basin The system may transport both fly ash and bottom ash or may be limited to fly ash alone Ash is pumped to the disposal pond as a slurry (about 10 wt %) through a system of pipes Here, the ash is allowed to settle Depending on climatic conditions, the transport water may remain in the pond and evaporate or may continue to rise in the pond until overflow occurs

One method available to limit water use and to reduce the potential for overflow discharge is installation of an overflow water return system In such a design, the hydraulic transport system includes a pipeline system for returning the overflow water to the power plant so that it may be reused for transport of additional ash to the pond Ideally, the return of water could be accomplished by gravity flow but if there is insufficient head, a return water pump would be required

Since a disposal system based on wet ponding always includes a large settling basin partially filled with water, it is important to consider the potential for pollution of ground water by pond water permeation through the soil below the pond To prevent such contamination, legislation now in place in many areas requires the installation of a low permeability liner for the ash pond Such a liner may be of low permeability natural material (clay) or may be a man-made polymeric membrane, or both Typical requirements limit permeability to 10^{-7} centimeters per second An illustration of a wet ash disposal pond is shown in Exhibit 5 2-2

Where a pond water discharge stream is required to maintain system water balance, consideration must be given to the quality of the discharge water In many circumstances, treatment of the water before discharge is required to meet the water standards described in the previous Section Treatment technologies are as described in that section

5 2 2 Dry Ash Disposal Systems

Where fly ash is collected using wet scrubbing technology, hydraulic transport of the the ash is the only available option Where the fly ash is collected dry however, utilizing electrostatic filter or fabric filter technology, consideration may be given to the implementation of a dry transportation and disposal system Typical designs for a dry disposal system are illustrated in Exhibit 5 2-3

Development of such a disposal site has several potential advantages over the use of wet ash ponding These include

- Reduced station requirements for fresh water use (important where water is in short supply
- Lower site development costs, since extensive dams and dikes are not required
- Reduced disposal area requirements, since dry compacted ash has considerably higher density than ponded ash (130 kg/m^3 vs 65 kg/m^3)
- Potential for reuse of the land after landfill closure

As in the case of wet pond disposal, a low permeability lining may be required to prevent ground water contamination In addition, consideration must be given to control of runoff (rain) water which may become contaminated by contact with ash or may actually erode the surface of the ash disposal site and carry particles of ash from the landfill

5.3 Comparison of Alternative Technologies

The primary disadvantage of dry ash disposal would seem to be the difficulty in transportation of the ash by truck to the ash disposal site instead of the use of a hydraulic transportation system This issue may be resolved by a careful and complete economic evaluation of both alternatives Analyses of this type conducted in the US have indicated that the dry ash disposal costs ($/ton), including transportation, is relatively insensitive to the quantity of ash to be disposed of and that transportation of the ash by truck, over long distances, is far less costly than hydraulic transport and wet ponding disposal

Serious consideration should also be given to separation of fly ash from bottom ash at the power station and to the development of independent systems for transportation and disposal of the two products Mixing of the two materials makes it impossible to utilize the bottom ash as an alternative to disposal and potentially creates a greater quantity of waste In addition, hydraulic transportation of bottom ash creates excessive wear on the pipeline system increasing maintenance costs Truck transportation of dewatered bottom ash to a separate disposal site should be investigated

SECTION 5 EXHIBITS

Exhibit 5 2-1

Exhibit 5 2-2

Exhibit 5 2-3

Exhibit 5 2-1

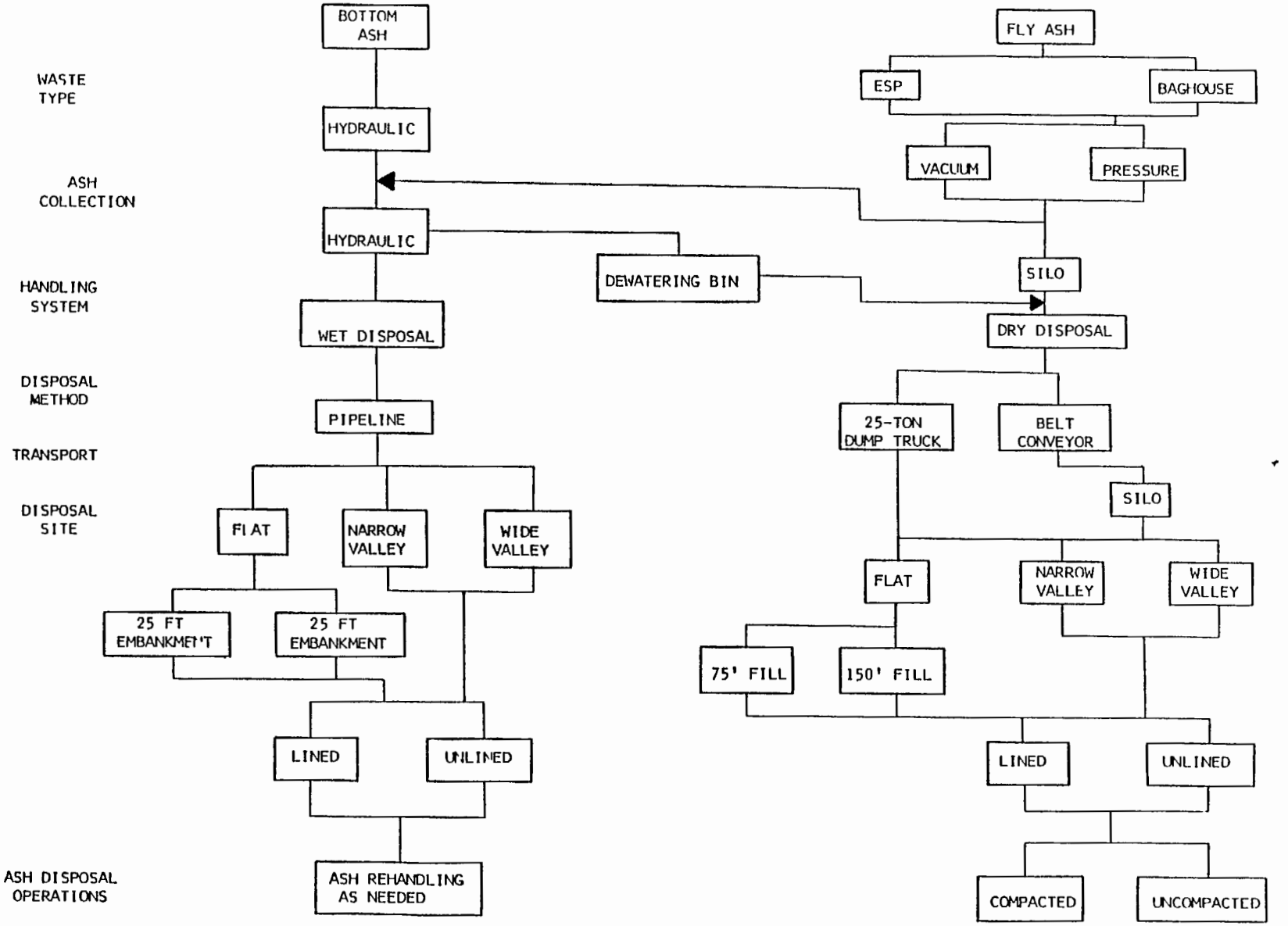

Specific Ash Disposal Schemes Considered for Cost Estimating

Exhibit 5 2-2

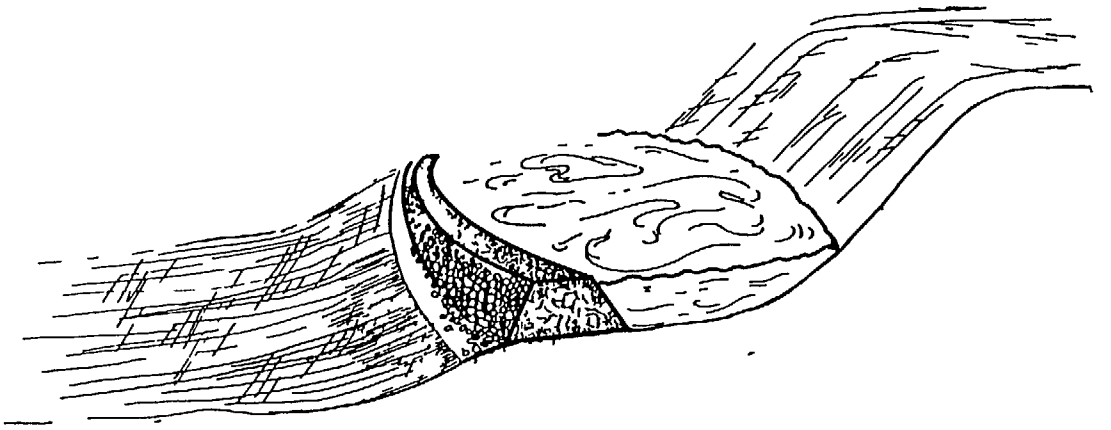

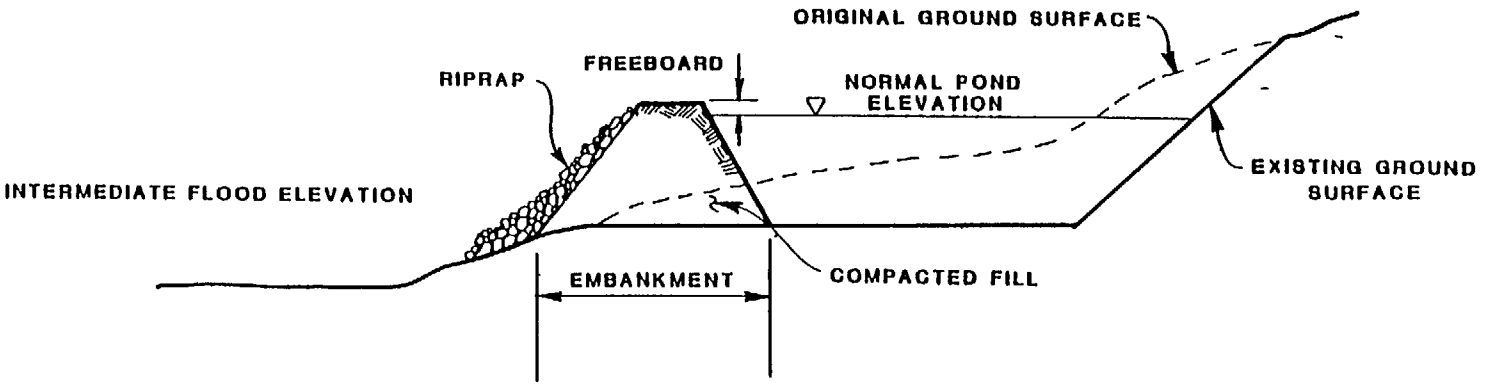

Typical Ash Pond Embankment Section

Exhibit 5 2-3

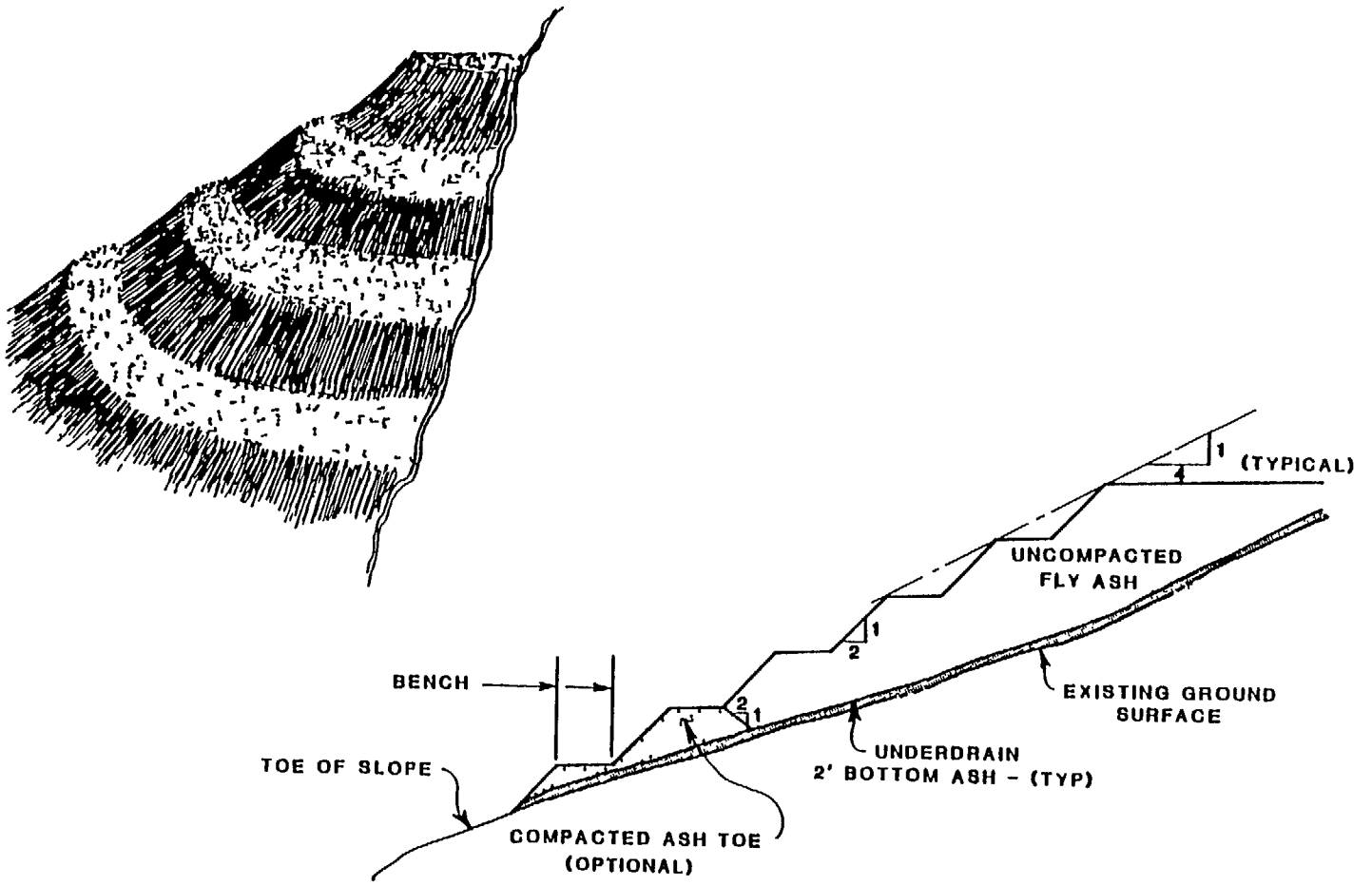

Cross-Section Dry Ash Disposal Area

Exhibit 5 2-3

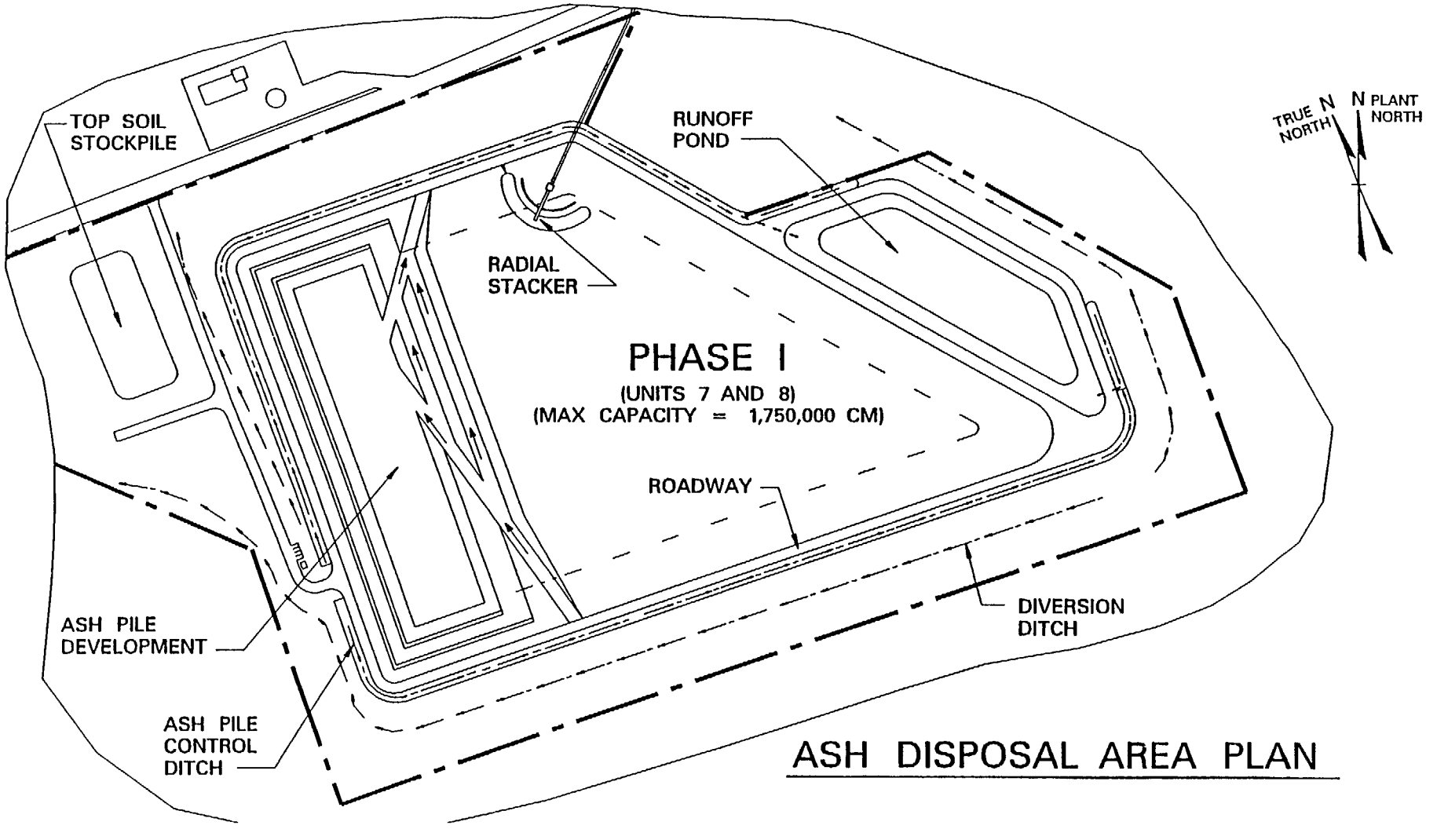
TOP SOIL STOCKPILE
RUNOFF POND
RADIAL STACKER
PHASE I
(UNITS 7 AND 8)
(MAX CAPACITY = 1,750,000 CM)
ROADWAY
DIVERSION DITCH
ASH PILE DEVELOPMENT
ASH PILE CONTROL DITCH
TRUE NORTH
N
N
PLANT NORTH
ASH DISPOSAL AREA PLAN

Exhibit 5 2-3

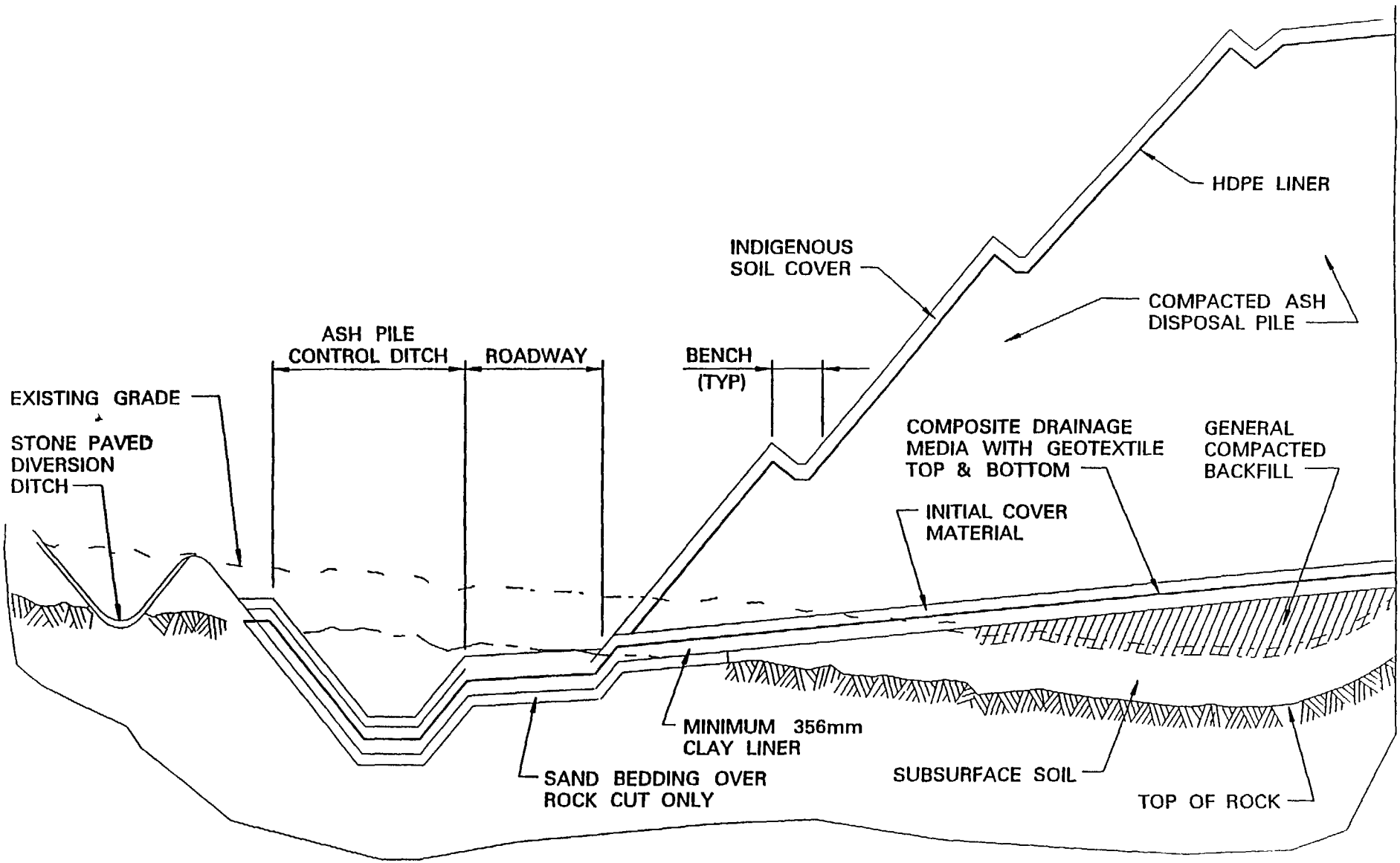

CROSS SECTION THRU ASH PILE

Exhibit 5 2-3

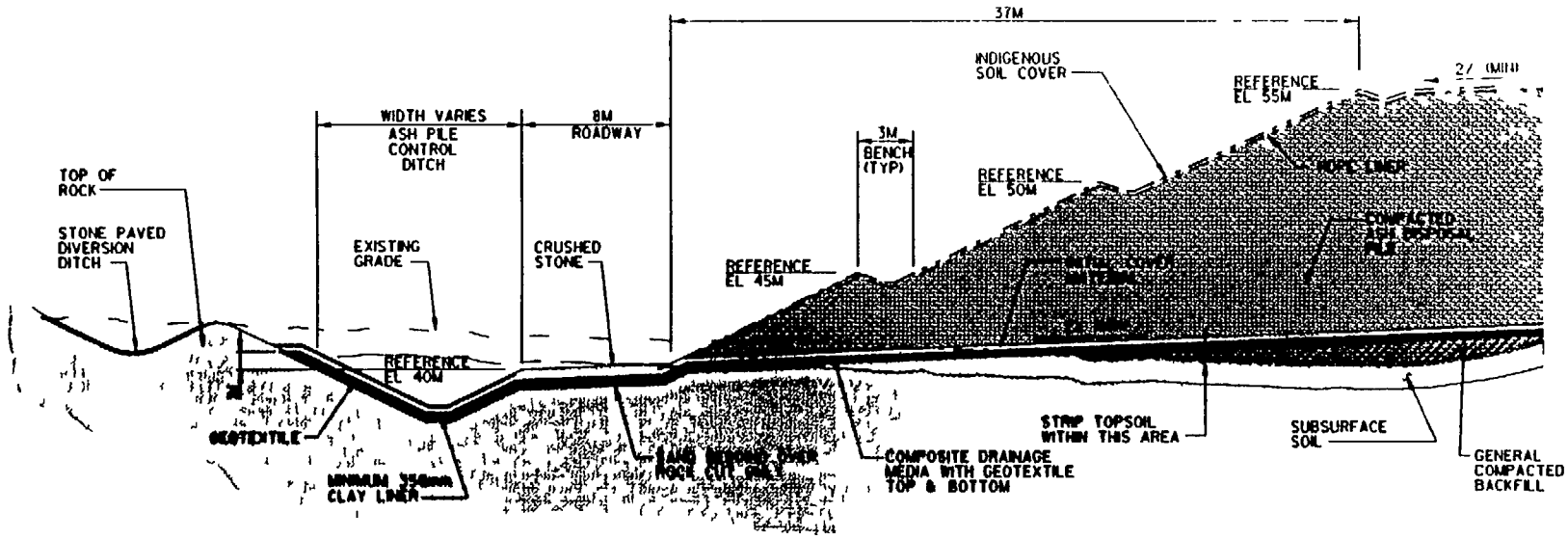

PROPOSED CROSS SECTION A–A THRU ASH PILE

SECTION 1 EXHIBITS

Exhibit 1 2-1

Exhibit 1 3-1

Exhibit 1 3-2

Exhibit 1 3-3

Exhibit 1 3-4

Exhibit 1 3-5

Exhibit 1 4-1

Exhibit 1 5-1

Exhibit 1 5-2

Exhibit 1 5-3

Exhibit 1 5-4

Exhibit 1 5-5

Exhibit 1 5-6

Exhibit 1 5-7

Exhibit 1 6-1

Exhibit 1 7-1

Exhibit 1 7-2

INTRODUCTION

The most versatile equipment for the removal of solid particulate matter from an air or gas stream is the fabric dust collector No particles are too large and few particles are too small for efficient operation and collection With a mass median size of 0 5 microns, a collection efficiency of virtually 100% can be expected The dirtier the filter media, the higher the percent recovery, and the finer the particles recovered

No particulate concentration is too heavy or too light Completely opaque smoke can be handled as can the invisible, permanent atmospheric solids of clean country air

Capacity rate can be varied widely with little effect on efficiency An oversize unit is more desirable than one which is undersize The inherent flexibility permits an increase in capacity within reasonable limits by increasing system fan horsepower

Filter media are available for hot, corrosive atmospheres such as combustion gases Inlet temperatures to 550°F are not uncommon High humidity is not a problem, providing there is no condensation of free moisture

Applications range from the abatement of a nuisance dust to a vital link in a process for the complete recovery of a valuable fine product

Some areas of application are Dusts from crushing, grinding, pulverizing, elevating, conveying, blasting, drilling, drying, milling, smoke from combustion, such as carbon black reactors, power plants, chemical process streams and fumes from metallurgical processes such as the open hearth, cupola, reverberatory furnace, electric furnace, etc

The following brief discussion is intended to facilitate the reader's understanding of the various factors entering into the gas-filtration process as it is applied to the removal of solid particulate matter encountered in industrial dust systems, air pollution control systems or in the removal of impurities from the normal atmosphere

DEFINITION OF FABRIC FILTERS

A fabric filter is one in which the dust-bearing gas is passed unidirectionally through a fabric in such manner that the dust particles are retained on the "dirty" gas side of the fabric, while the cleaned gas passes through the fabric to the clean gas side, whence it is removed by natural and/or mechanical means The fabric may be of any fibrous material, – either natural (cotton, wool, etc) or man-made (nylon, Orlon®, Dacron®, acrylics, fiber-glass etc ,), either spun into yarn and then woven, or impacted, needled or bonded into a felt The man-made (or synthetic) fibers are either produced as a continuous filament which is spun and woven in the usual manner, or may be mechanically broken down into short lengths or "staple" which may be spun, woven, or impacted into a felt Woven fabrics are identified by 'thread count" and by ' weight of fabric" per unit area Felts are identified in terms of thickness and weight per unit area

The ability of the filter medium to pass clean air is normally stated as "permeability" and is the volume of clean air in terms CFM that is passed through one square foot of the filter at a pressure differential of 0 5" of water gauge

THEORY OF FABRIC FILTRATION

There are two basic types of filters surface (sieve) and depth

Woven fabrics are intended to be surface filters However, new or overcleaned fabrics are usually too open to function in this manner, and penetration (and escape) of some extremely fine particles occurs until a filter cake is formed With time, and the accumulation of a filter cake, collecting efficiency closely approaches 100 percent

No other method of dust or fume collection can attain the efficiency level which can be reached by a fabric filter, at comparable power requirements

All (or nearly all) of the gas flow is inter-yarn (between yarns) rather than intra-yarn (through the yarns) The yarns are almost impenetrable barriers

Felts and non-woven media are intended to be depth filters and are generally required to operate at a higher initial collecting efficiency than woven fabrics This is because the felt media is usually cleaned more frequently than the woven media (often by intensive back-wash), and the felt is usually required to operate with less filter cake than the woven media Penetration of particulate matter into the interior of the felt is expected However, if the operating cycle is long enough, and dust loading great enough the cake eventually covers over and grows on top of the felt, and the media functions as a surface filter

In many cases both woven fabrics and felts function first as depth filters, then as surface filters, at various times within an operating cycle

Pressure drop usually dictates frequency of cleaning or cake discharge

Woven fabrics, usually more flexible than the felts may be vibrated in some manner, or flexed, or back-washed Felts are usually back-washed

Fabric Characteristics And Suitability

	Polypropylene	Polyester	Acrylic	Fiberglass*	Nomex®	Ryton®	P-84*	Teflon®
Temp °F	170	275	275	500	375	375	500	500
Abrasion	Excellent	Excellent	Good	Fair	Excellent	Good	Fair	Good
Energy Absorption	Good	Excellent	Good	Fair	Good	Good	Good	Good
Filtration Properties	Good	Excellent	Good	Fair	Excellent	Excellent	Excellent	Fair
Moist Heat	Excellent	Poor	Excellent	Excellent	Good	Good	Good	Excellent
Alkalines	Excellent	Good	Fair	Fair	Good	Good	Fair	Excellent
Mineral Acids	Excellent	Fair	Good	Poor**	Poor	Excellent	Good	Excellent
Oxygen (10%+)	Excellent	Excellent	Excellent	Excellent	Excellent	Poor	Excellent	Excellent

Sensitive bag to cage fit Fair with acid resistant finishes NOTE Combinations of variables alter the resistance of the fiber to the specified Performance ratings i e time temperature and gas stream chemistry

FABRIC FILTRATION OVERVIEW

- o Established Technology in Process Industries
- o Dissatisfaction With Performance of Some Electrostatic Precipitators
- o Clear or Near-Clear Stack Requirements
  - Very High Collection Efficiencies
- o Fuel Source Uncertainty
  - Wide Range in Characteristics
  - Low Sensitivity to Fuel Changes
- o On-Line Maintenance
- o Large Scale Experience on Coal-Fired Steam Generators
- o Application Considerations
  - Higher Pressure Drop Than ESP's
  - Baglife
  - Bag Caking, Blinding or Melting
  - Bag Acid Attack
  - Minimum Operating Temperature

FILTRATION PROCESS

- Initial Filtration
  - Clean Fabric
  - Few Minutes
  - Low Collection Efficiency - 70 to 90 Percent
- Residual Dust Cake Establishment
  - Many Filtering and Cleaning Cycles
  - Few Days to Several Months
  - High Collection Efficiency
    - > Ash Characteristics
    - > Cleaning Methods
    - > Pressure Drop May Stabilize
- Steady State
  - Formation of Porous Dust Cake
  - Very Little Bleed Through
  - Stabilized Collection Efficiency
  - Stabilized Pressure Drop

FABRIC FILTRATION METHODS

- Reverse Gas
  - Dust Collection is Usually on the Inside of the Bag
  - During Cleaning, the Bag Collapses and the Dust Falls Into the Hopper
  - Metal Rings are Typically Sewn Into the Bag at Intervals to Prevent the Bag from Totally Collapsing, and Thus Preventing Movement of the Dust Cake Through the Bag to the Hopper
  - Baghouses of This Type are Compartmentalized so That One Compartment Can be Isolated for Cleaning

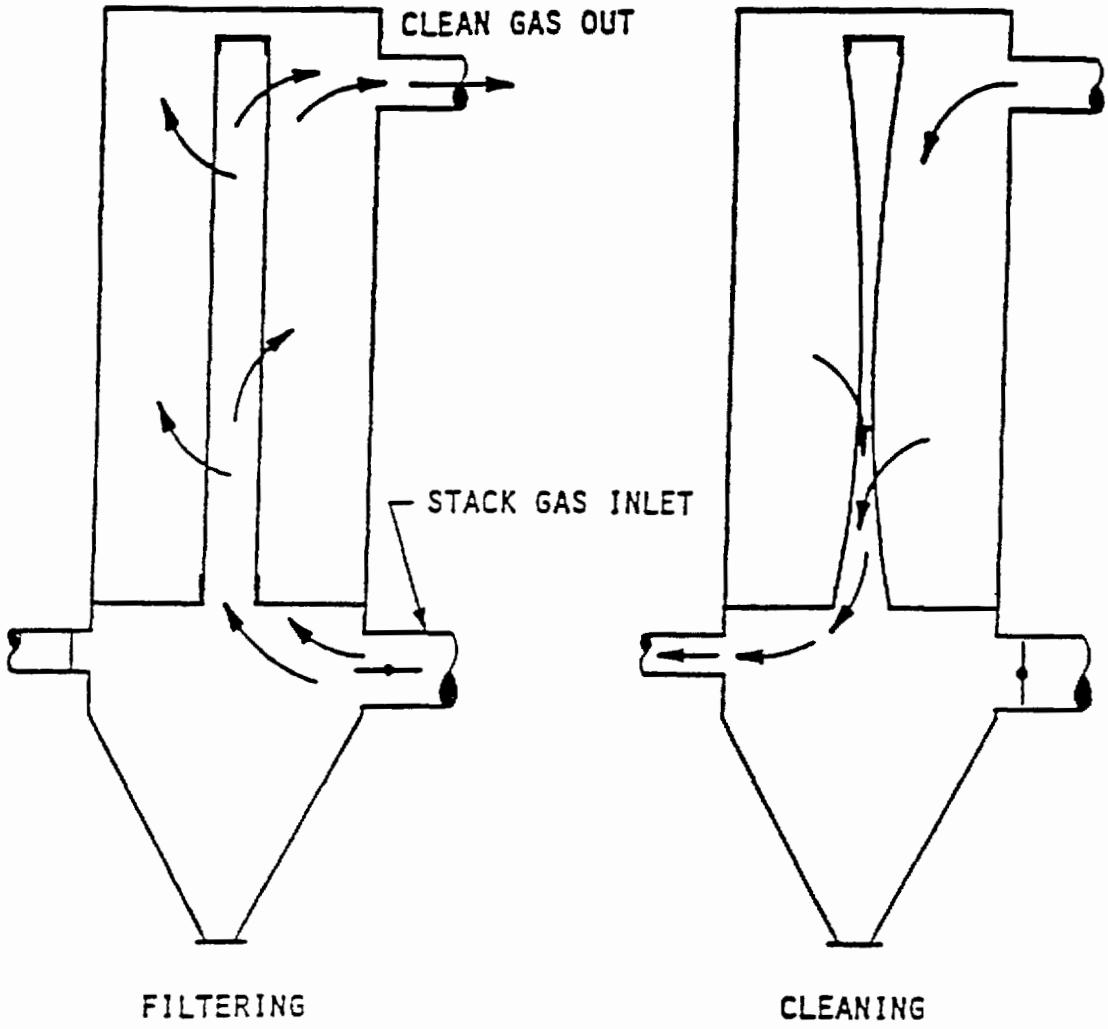

REVERSE FLOW TYPE BAGHOUSE

FABRIC FILTER

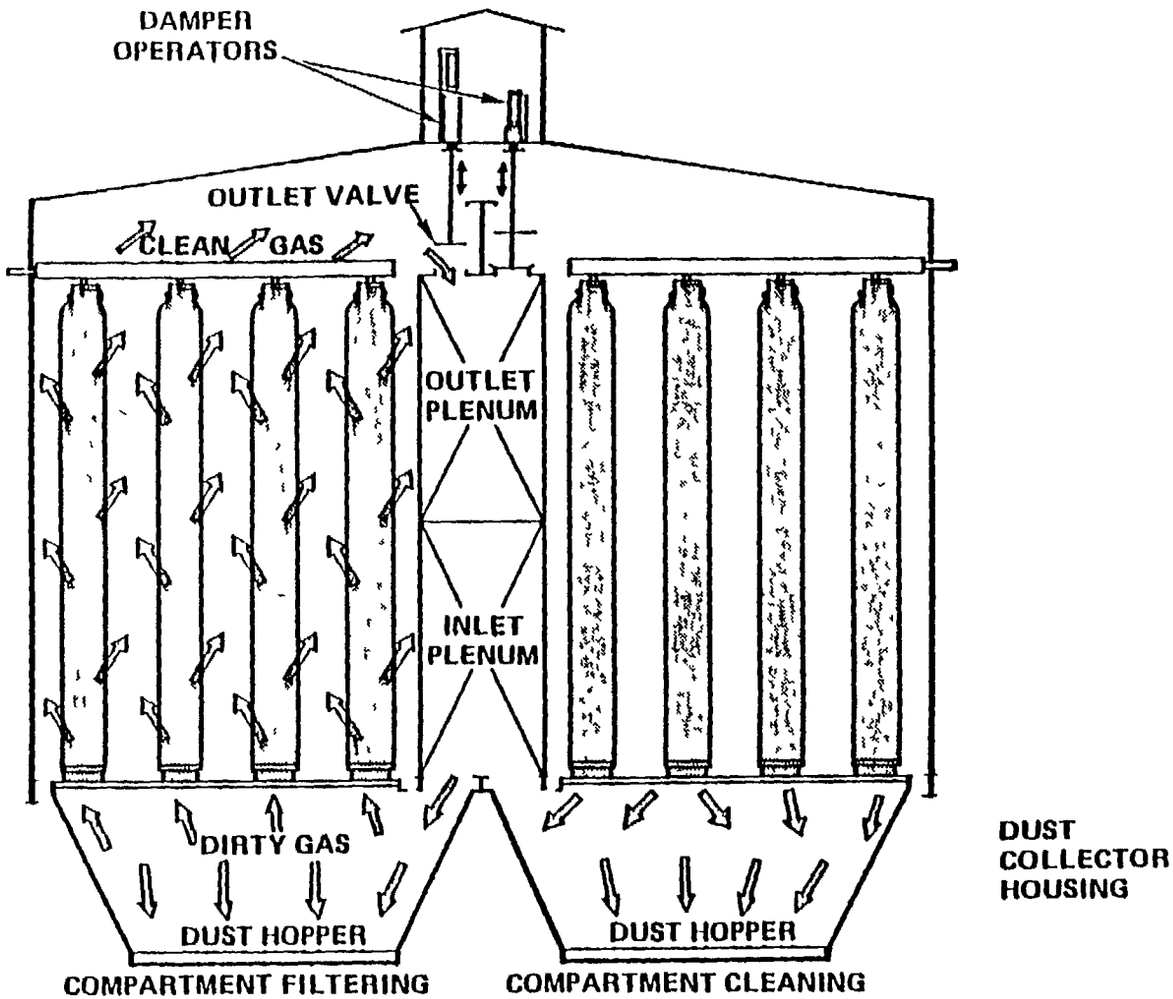

77 M10 20 26

Custom Reverse-Gas Cleaning Design

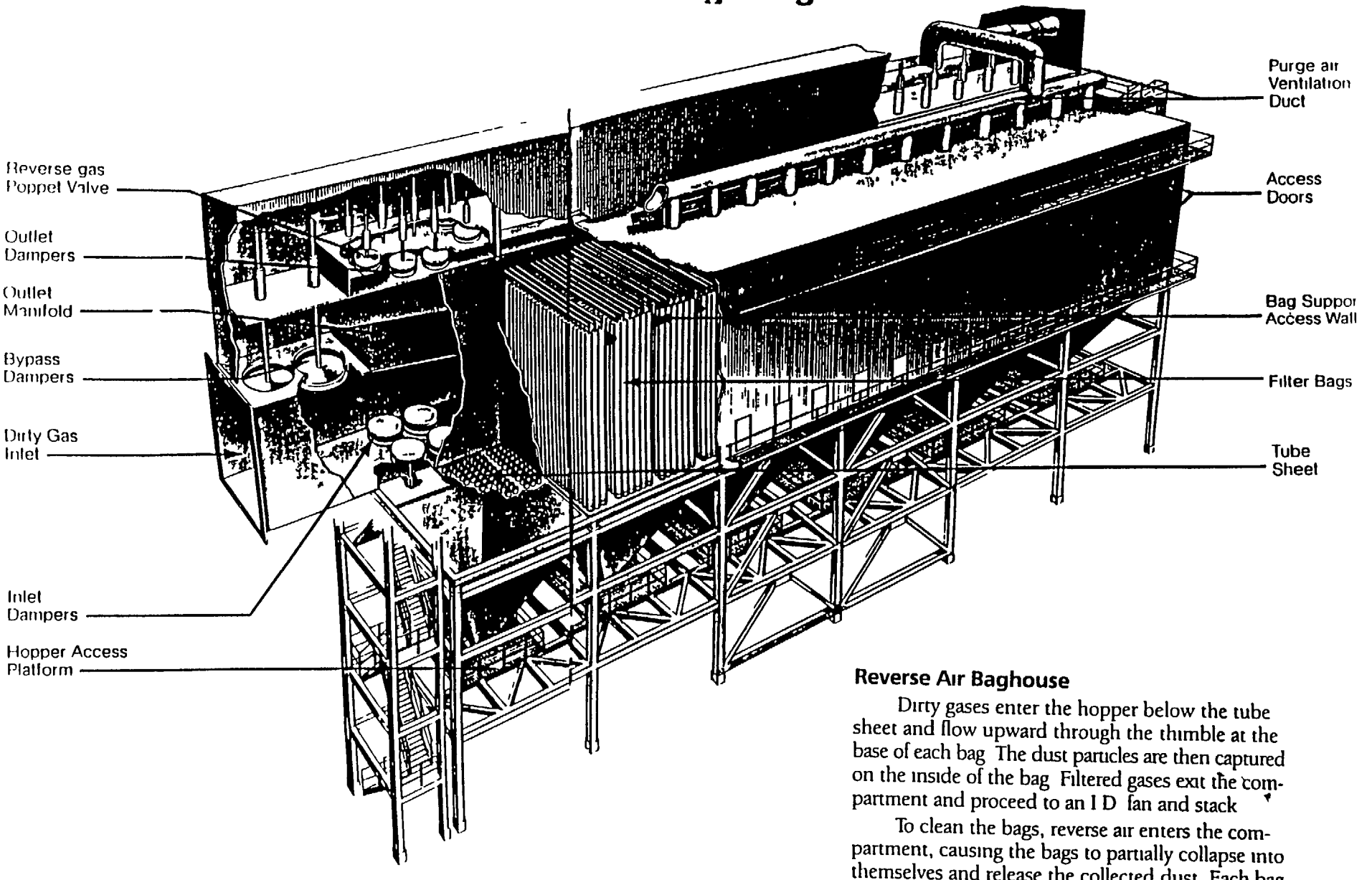

Reverse Air Baghouse

Dirty gases enter the hopper below the tube sheet and flow upward through the thimble at the base of each bag The dust particles are then captured on the inside of the bag Filtered gases exit the compartment and proceed to an I D fan and stack

To clean the bags, reverse air enters the compartment, causing the bags to partially collapse into themselves and release the collected dust Each bag features anti collapse rings strategically placed to prevent total shutting off of the interior of the bag This allows the released dusts to fall into the hopper and be carried away

- Pulse Jet
  - Dust Collection is Usually on the Outside of the Bag
  - Cleaning is Accomplished by Applying a Short Duration Pulse of High Pressure Air Into the Inside of the Filter Bag
  - Bags are Fitted With Wire Cages to Prevent Collapse During Filtration

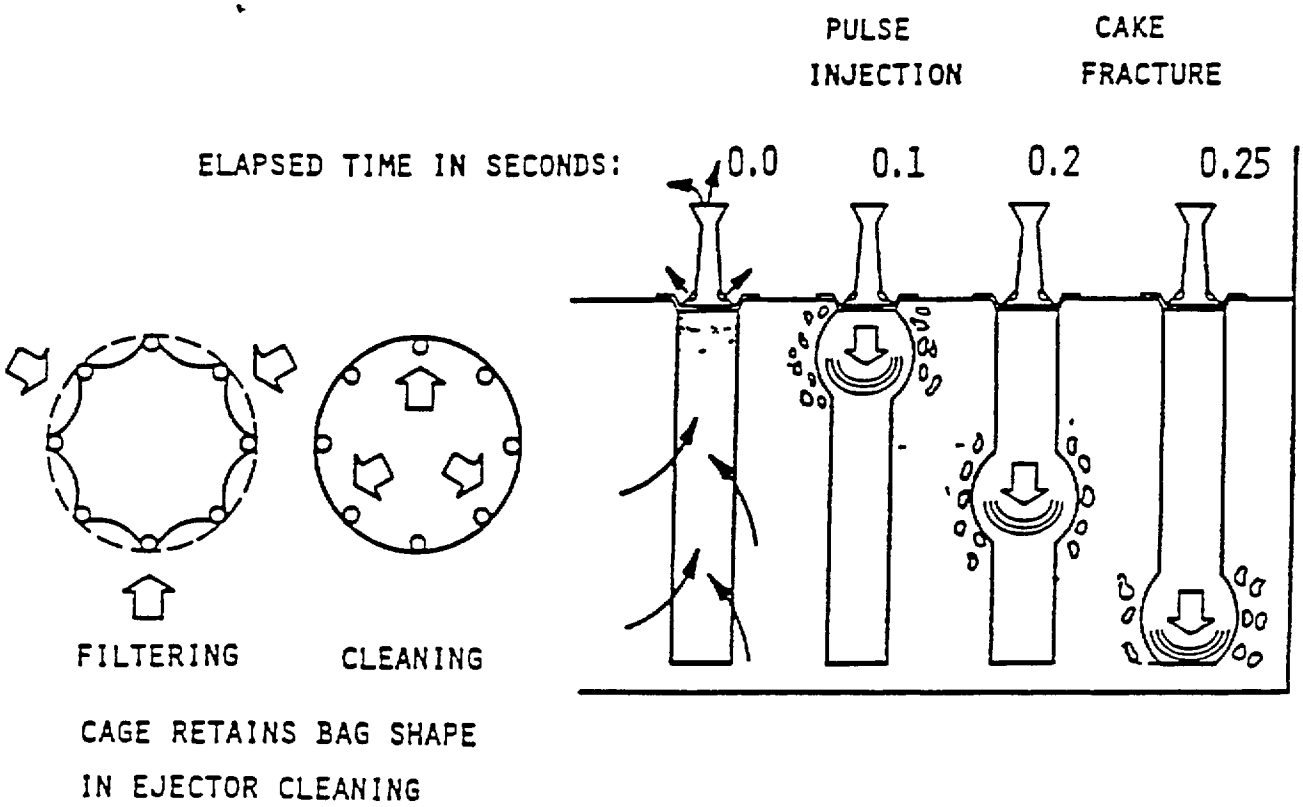

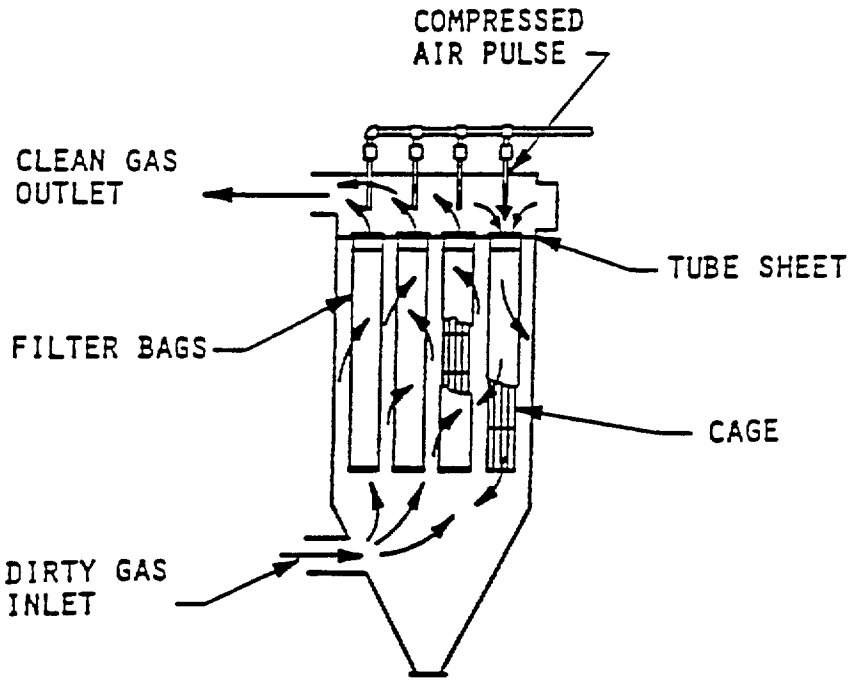

PULSE JET TYPE BAGHOUSE

Low Pressure High Volume Pulse Jet

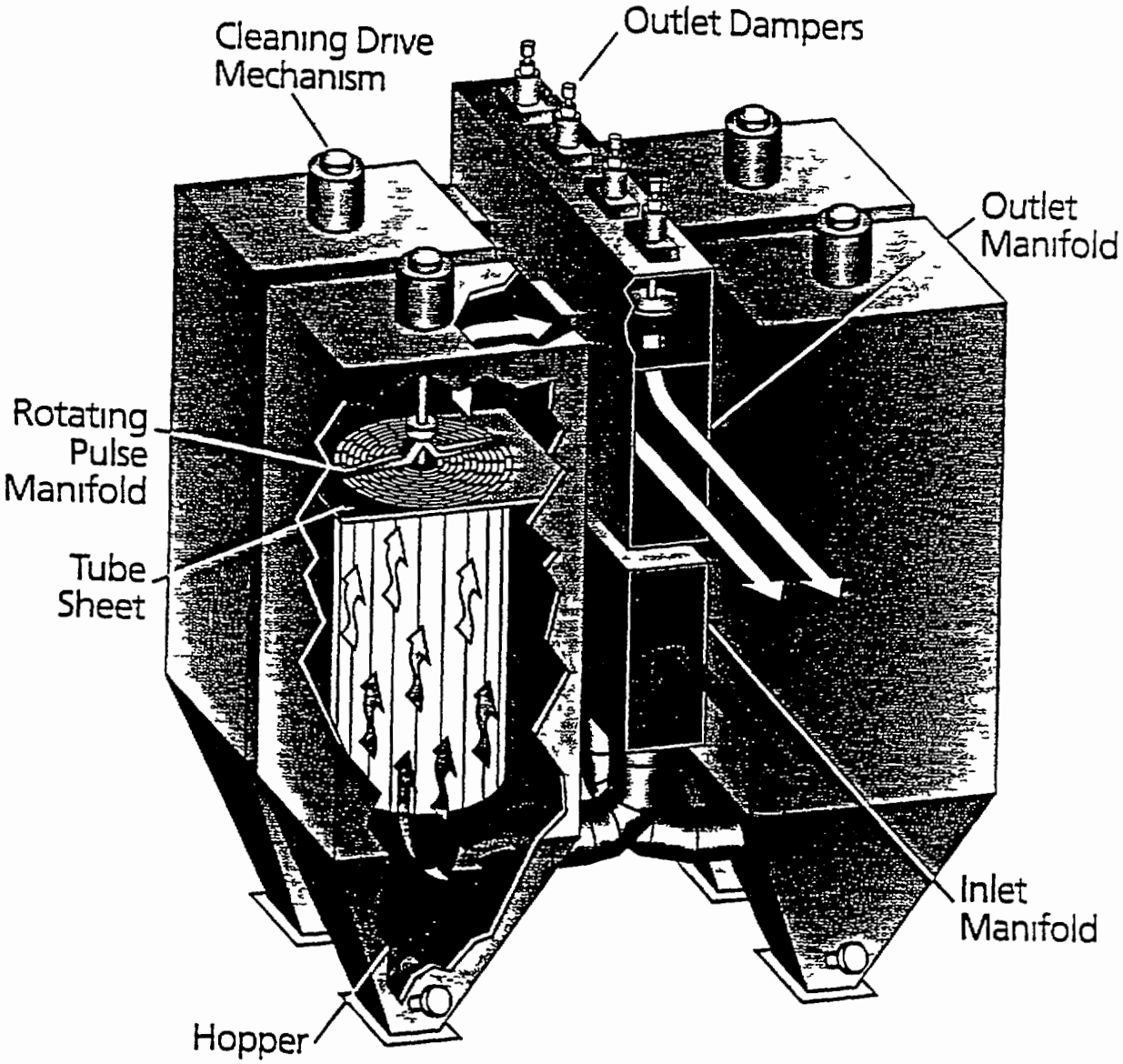

Pulse Jet Baghouse

Dirty gases enter the hopper below the bags and dust is collected on the bags outside surfaces The bags are connected to the tube sheet with a snap ring which fits securely into the tube sheet holes To prevent collapse during filtering each bag is equipped with a wire cage Bags are cleaned by short powerful pulses of air delivered at the tops of the bags in the reverse direction of gas flow. These pulses cause bag motions that combine with the back-flushing action to dislodge the dustcake which falls into the hopper

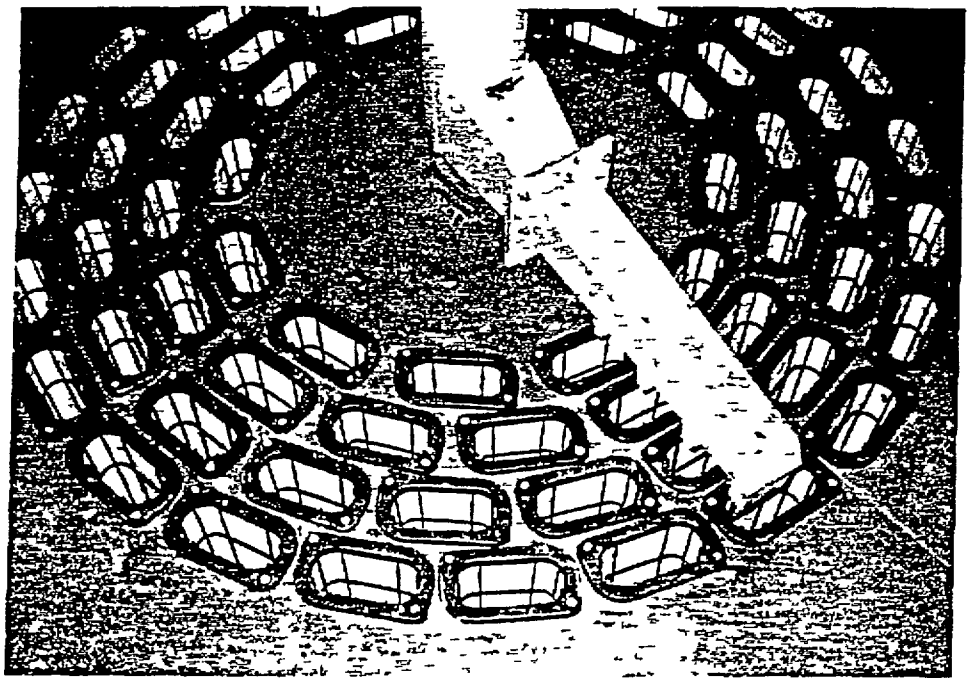

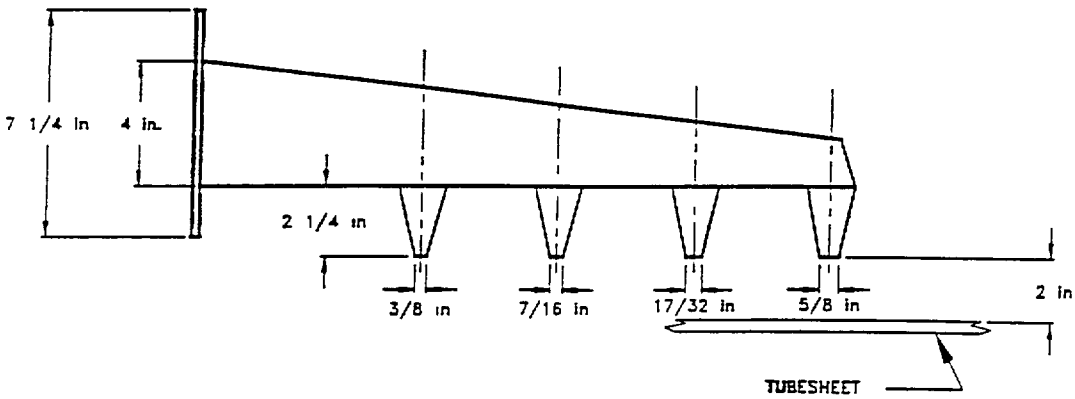

Figure 2 Photograph of the low pressure (LP) tubesheet and cleaning manifold arm Below the photograph is a schematic drawing of the pulse arm including dimensions.

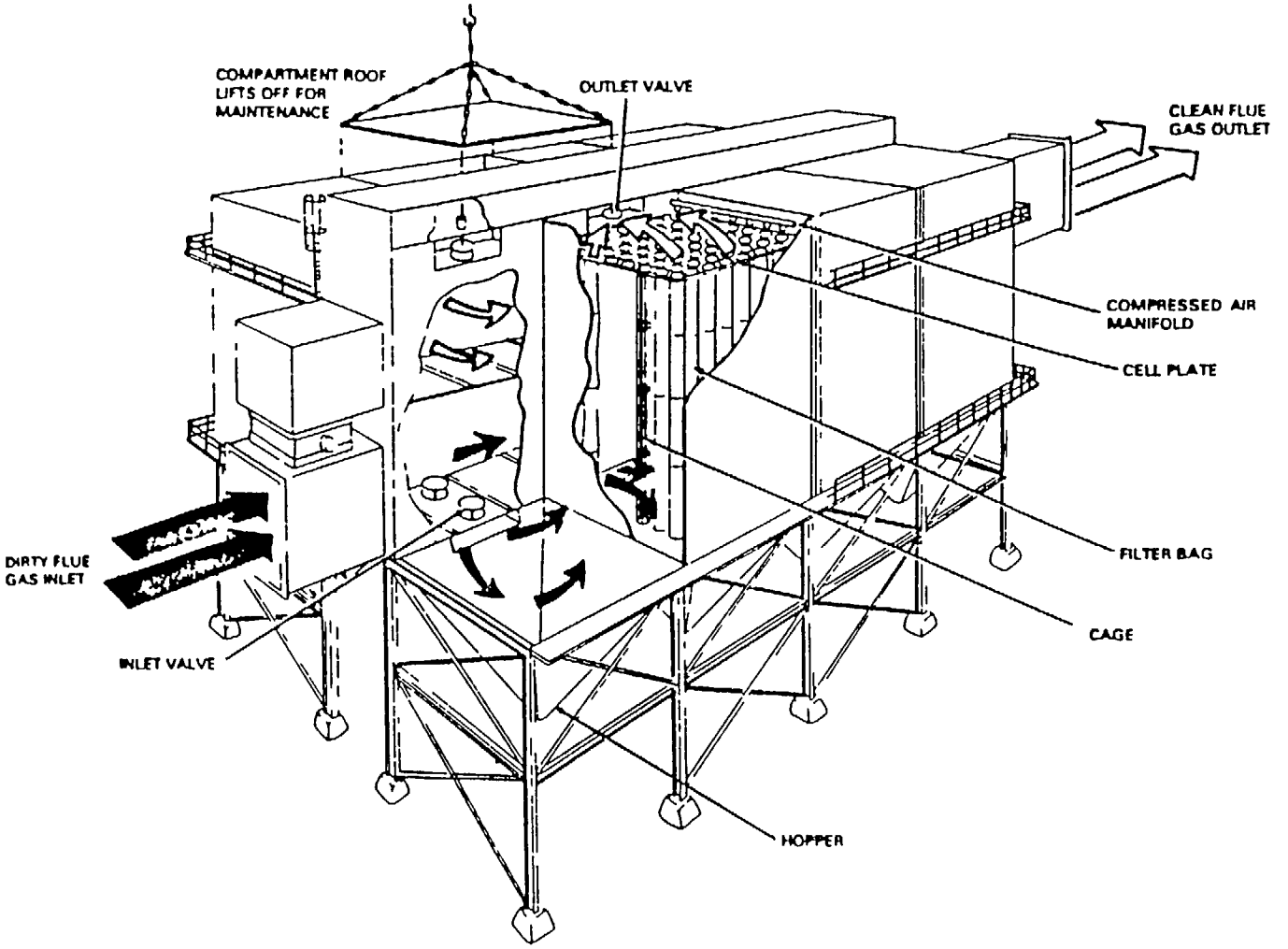

Cutaway view of a typical pulse-jet cleaned baghouse Cleaning is usually performed on-line

AIR-TO-CLOTH RATIO

- The Air-to-Cloth (A/C) Ratio is Simply a Mathematical Expression of the Amount of Fabric Available to Filter a Given Volume of Gas at a Given Flow Rate ($ACFM/FT^2$)

  $$\text{Gross A/C} = \frac{\text{Total Inlet Gas Volume}}{\text{Total Cloth Area in Collector}}$$

  $$\text{Net A/C} = \frac{\text{Total Inlet Gas Volume}}{\text{On-Steam Cloth Area}}$$

- Pulse Jet Filters, Utilize Dense Felted Material and Operate at High Air-to-Cloth Ratios

- Inside Bag Collectors (Shaker and Reverse Gas) Use Looser Woven Material, Requiring More Bags

- The A/C Ratio is a Very Important Factor Used in the Design and Operation of Filters. Improper Ratios can Contribute to Inefficient and More Costly Operation.

- Operating at an A/C Ratio that is Too High May Lead to a Number of Problems
  - Compacting of Dust on the Bag Resulting in Excessive Pressure Drops
  - Breakdown of the Dust Cake Resulting in Reduced Collection Efficiency
- Major Problem Associated With a Very Low A/C Ratio is that More Cloth is Generally Needed for a Given Flow Rate, Results in a Large Installation.
- Pulse Jet Filters Generally Operate at an A/C Ratio Ranging from 3.0 to 4.0. In Recent Years, There has Been A Trend Towards Lower A/C Ratios. Reverse Gas Filters Generally Operate with A/C's Ranging From 1.5 to 2.2.
- Reduction of Pulse Jet Filter A/C Ratios Results in a Large Filter and Reduces An Advantage Over a Reverse Gas Filter

PRESSURE DROP

- o Normal Pressure Losses Range From 2 to 6 Inch Water Column

- o Significant Design Parameters
  - Particulate Loading
  - Particulate Density
  - Particulate Size Distribution
  - Particulate Shape and Structure
  - Flue Gas Temperature and Density
  - Filter Plenum and Damper Velocities
  - Fabric Filtration Velocity through Bags
  - Particulate and Gas Distribution to and through the Fabric Filter
  - Minimum Cleaning Frequencies
    - > Quantity of Compartments
  - Fabric Type
  - Particulate Ability to Agglomerate
  - Contamination of Particulate
    - > Uncombusted Oils
    - > Condensibles

- o Pressure Drops Across Pulse Jet and Reverse Gas Fabric Filters are Similar

DESIGN CONSIDERATIONS

A number of factors must be considered when contemplating the retrofit of a fabric filter into a existing ESP. These include space considerations, conversion layouts, fabric materials and cages

Space Considerations: Determinations of the technology's applicability should start with a review of the size constraints of the existing ESP and proposed fabric filter Assuming a typical filter bag length of 20 feet or more and on-line cleaning, the conversion normally requires an precipitator SCA of approximately 250 ft^2/1000 acfm The use of longer bags, however, would reduce the total SCA needed to accommodate the fabric filter conversion without requiring the addition of more casing area or hoppers

The length of the bags will depend on several factors, including can velocity The increase in can velocity must be offset, either by increasing the spacing between the filter bags or by improving the flow distribution design A modified flow distribution will allow the flow to enter at both the bottom and sides of the bags, thereby minimizing the actual effects of the higher velocities and allowing proper on-line cleaning to take place

Munmorah Power Station: High maintenance requirements and poor performance from the electrostatic precipitators at Munmorah Power Station, Units 3 and 4, caused the Electricity Commission of New South Wales (ECNSW) to consider alternative particulate control measures[1]. The Commission chose to retrofit its existing 350 MW ESP casing with a pulse jet fabric filter and awarded the contract to convert Unit 3 to Howden (now named Lurgi Howden Fabric Filters) in March, 1990

The existing ESP casings were sized at an SCA of 390 ft^2/1000 acfm Flue gas volume was 1,118,621 ACFM (528 Am^3/hr) at a flue gas temperature of 266 degrees F Inlet dust loadings ranged from 10-16 gr/DSCF (25-40 g/Nm^3) with a medium particle size distribution of 5-30 microns

The Howden Low Pressure technology design[2] was based on minimal modification of existing equipment and structures For Munmorah Unit 3, virtually the entire ESP casings, hoppers, structural steel, ductwork and insulation were reused The high packing density of the Howden design allowed an extremely conservative gross air-to-cloth ratio of 3 4 1, utilizing the entire ESP casing with a net air-to-cloth ratio of 4 0 1 The general configuration of the baghouse is shown on Figures 1 and 2

An internal divider wall was installed in the casings transverse to the gas flow to provide a total of eight isolatable compartments, or cells, per boiler Each compartment contains six bag bundles with 267 bags per bundle, for a total of 12,816 bags per boiler The 20-foot filter bags are cleaned in the on-line mode by a rotating manifold with cleaning air supplied by a positive displacement blower at 12 psi Aerodynamic model studies were conducted to ensure that the flue gas entering the casings and individual compartments was uniform and evenly distributed, thereby avoiding bag abrasion and minimizing re-entrainment during on-line cleaning

Both inlet and outlet nozzles of the ESP were modified for the new eight-compartment fabric filter configuration New guillotine-type dampers were installed to allow for compartment isolation to facilitate on-line maintenance.

Since startup in May, 1990, the ESP/FF has accumulated more than 6,000 operating hours No failures of the acrylic bags have been reported throughout the system's operating experience, except for initial installation defects Recent performance tests conducted by ECNSW[3] have shown that the average emission levels are approximately 0 0008 gr/acf (3 5 mg/Nm^3), comparted to the guarantee levels of 0 01 gr/acf (50 mg/Nm^3) System pressure drops are well below design levels of 10 inches W C (2 5 kPa) at a net A/C ratio of 4 0 cfm/sq ft (0 02 m/s)

FIGURE 1 - MUNMORAH POWER STATION
UNIT NO. 3-350 MW
ESP FABRIC FILTER CONVERSION

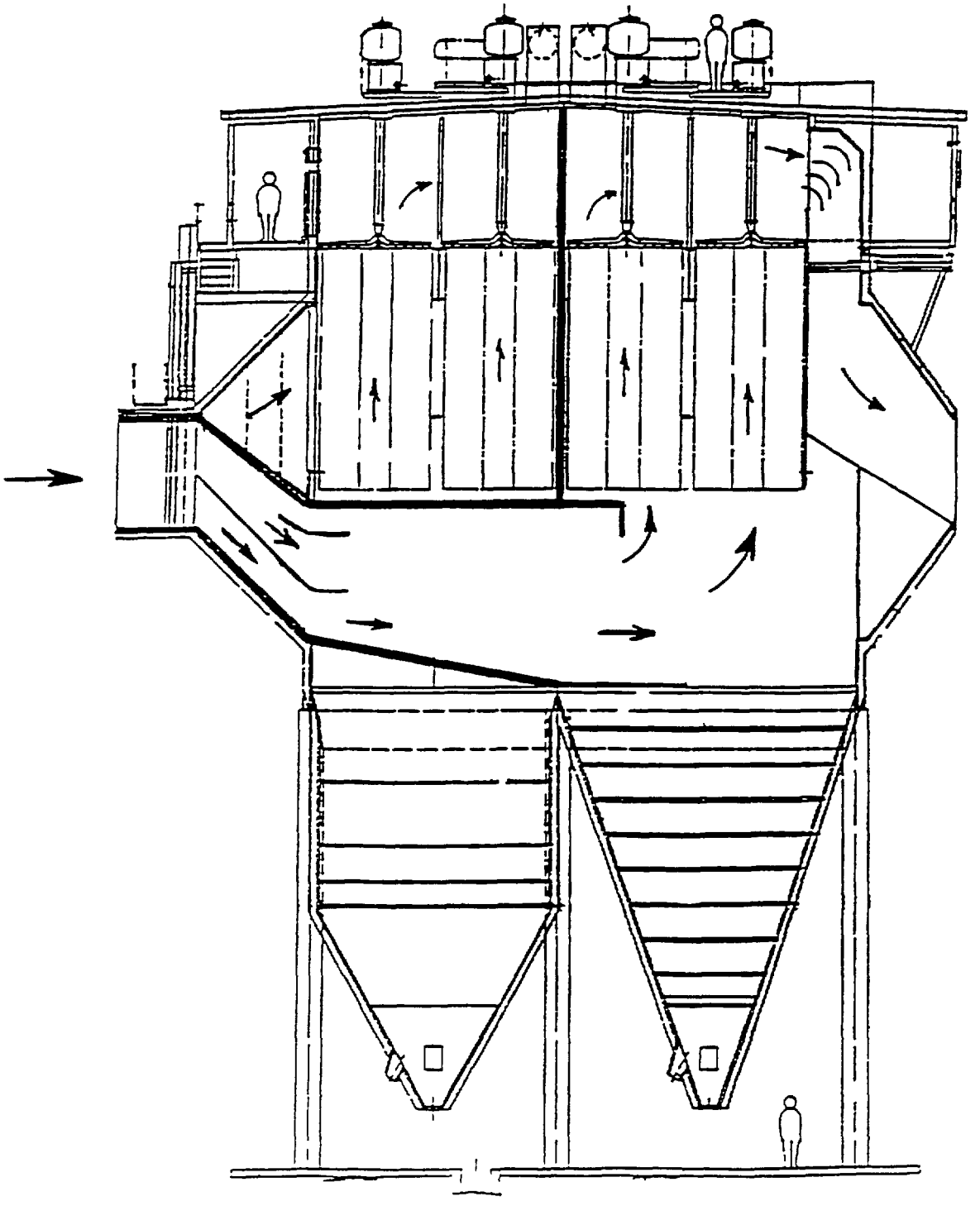

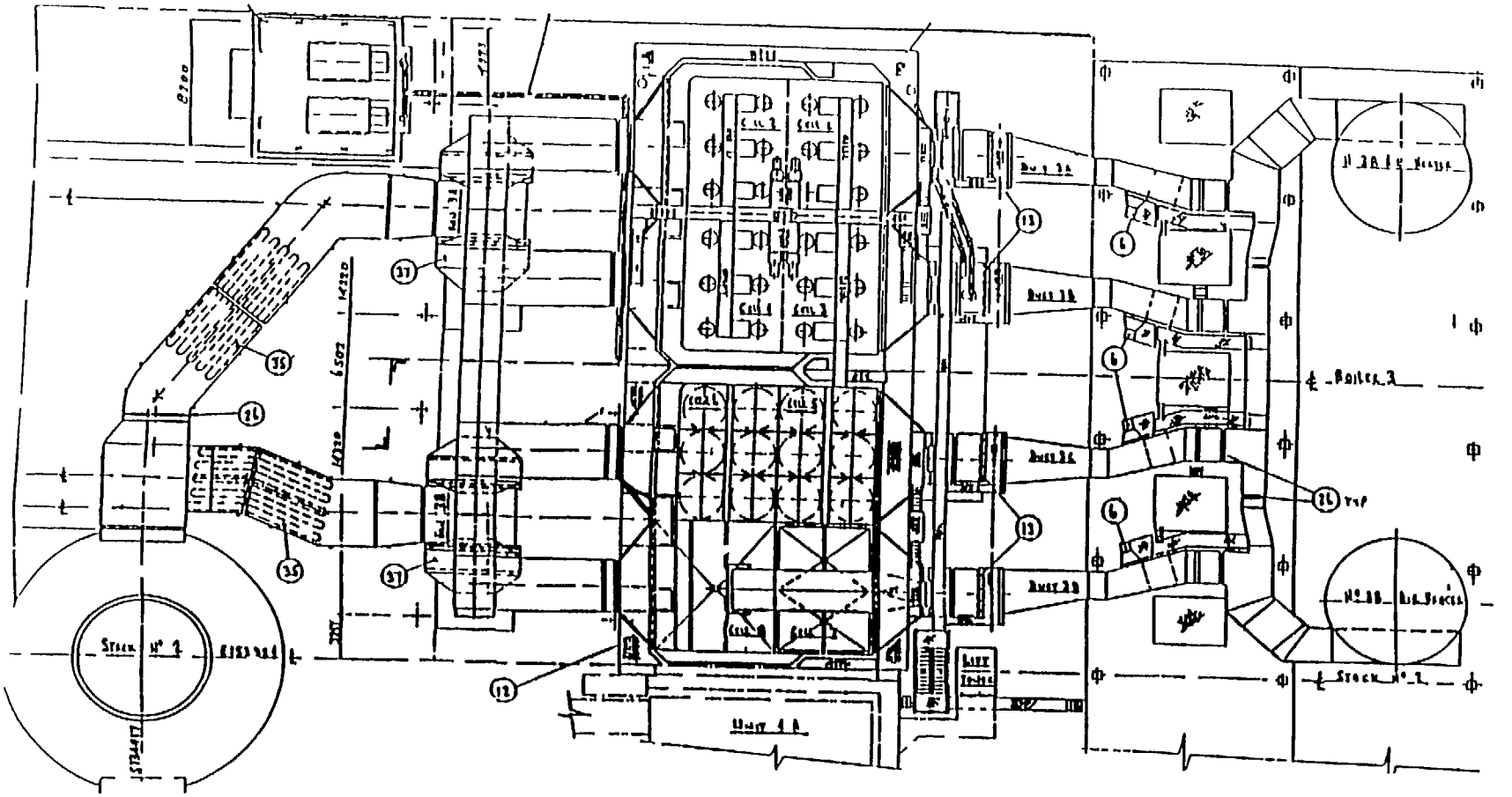

FIGURE 2
ARRANGEMENT OF FABRIC FILTER PLANT
ON NO. 3 UNIT AT MUNMORAH POWER STATION

THE COHPAC CONCEPT

PRINCIPLES OF OPERATION

The basic concept of COHPAC is to install a pulse jet fabric filter system in series after an existing energized precipitator with the filter acting as a particulate polishing or performance enhancing device Since the existing precipitator both charges the particles as well as removes a significant portion of them from the gas stream, the flue gas reaching the pulse jet has a substantially reduced dust loading and also potentially carries a residual electrostatic charge As a result, the pulse jet baghouse can operate at very high gas-to-cloth ratios of 10 to 20 ft/min (versus 2 to 4 ft/min for conventional baghouses) without a significant increase in pressure drop or emission levels Therefore, a COHPAC pulse jet baghouse can be about 50% smaller than conventional pulse jet fabric filter systems Figure 1 shows an example of this approach

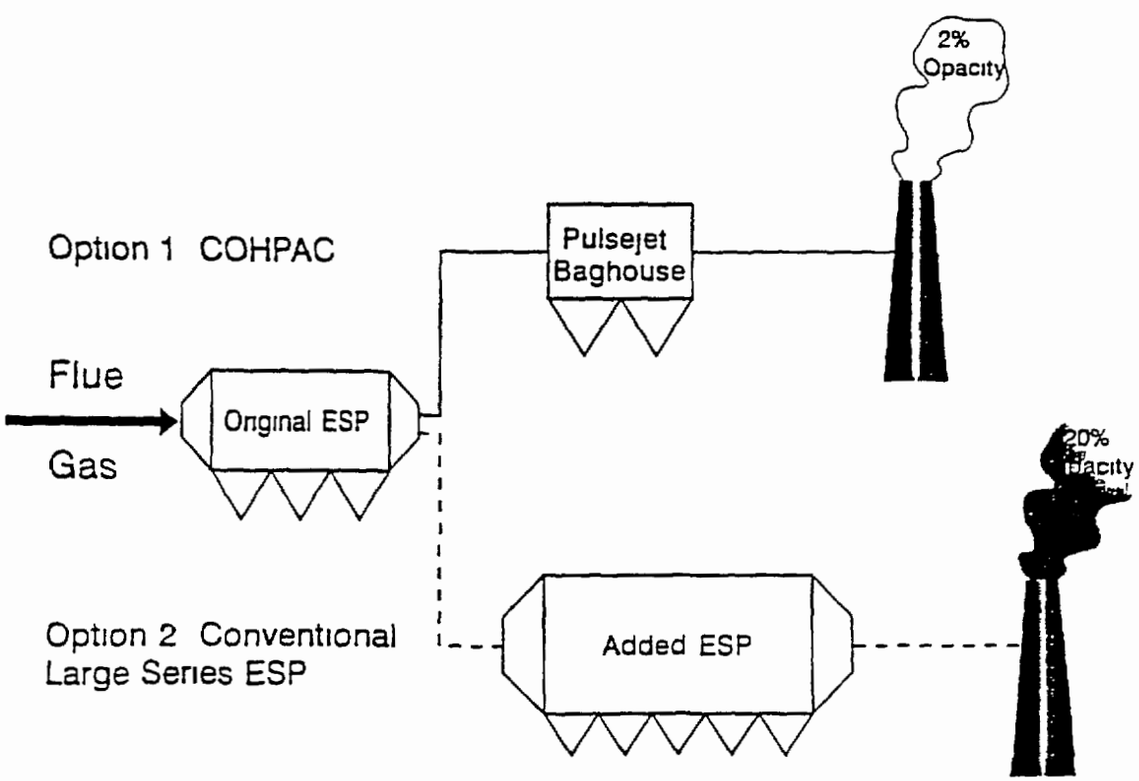

Figure 1 COHPAC Basic Concept

Compact Hybrid Particulate Collector Technology (COHPAC)

TU Electric Co - Big Brown Steam Electric Generating Station, Fairfield, TX

First commercial use of COHPAC technology achieves present and future particulate collection requirements for two coal-fired utility boilers

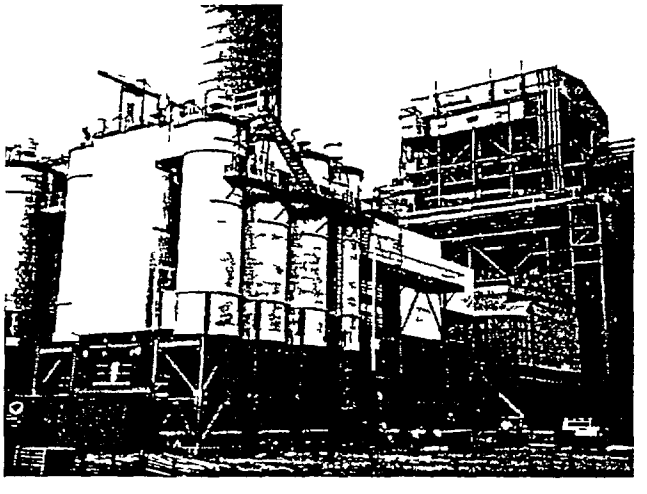

Project Scope

In May, 1991, Research-Cottrell was contracted to design, engineer, and supply the first full-scale COHPAC units The system consists of eight low-pressure, high-volume (LPHV) pulse-jet fabric filters designed to provide increased particulate collection from the flue gas stream

A 145 Mw demonstration system was completed and in full operation on May 15, 1992 The full-scale COHPAC system on Unit #2 was completed and placed into operation in November, 1995 Construction on the Unit #1 system is scheduled for completion in May, 1996 When fully completed, the system will be the largest pulse-jet installation in North America

COHPAC uses high-ratio pulse-jet fabric filters in series and downstream of an energized electrostatic precipitator Research Cottrell is licensed by EPRI to offer COHPAC commercially

Application

TU was required to reduce allowable opacity from 30% to 20% from two 575 Mw lignite-fired boilers The existing ESPs were not originally sized to achieve these stringent emissions levels Additional, properly sized ESPs would require significant increases in plant space and capital expenditures, and COHPAC is a more effective solution on both counts

Additional COHPAC advantages include baghouses are relatively insensitive to fuel switching problems, they offer better capture of fine particulate, an advantage over ESPs when considering future pending legislation (PM-10), and on-line maintenance can be performed without boiler interruption

Equipment

Research-Cottrell's COHPAC technology consists of eight shippable compartments designed to treat 735,000 acfm of flue gas Each compartment contains 312 twenty-foot-long filter bags The bags are cleaned by a rotating cleaning air manifold on a preset basis, delivering 10-12 psi of pressurized air to the filter bags Each module can be isolated for off-line cleaning and on-line maintenance

The COHPAC in-series arrangement enables the fabric filters to operate at high gas-to-cloth ratios while maintaining nominal pressure drops and low outlet emission levels An advantage to TU's selection is that it will reduce space requirements by as much as 75% compared to other particulate control options, such as increasing the size of existing ESPs or replacing them with conventional baghouses

Operating Data (Full System)

Boiler Type	Two 575 MW PC Fired Boilers
Gas Volume	735,000 acfm
Temperature	385°F
Fuel Type	Texas lignite
Fabric Type	Ryton Felt 18 oz / yd²
Pressure Drop	6 8 inches W C
Gas to cloth Ratio	16 fpm net net (design)
Start up Dates Unit 1 Unit 2	Full Systems May 1996 Nov , 1995
Opacity	< 5%
Dust Loading	< 0 01 lb /MMBtu

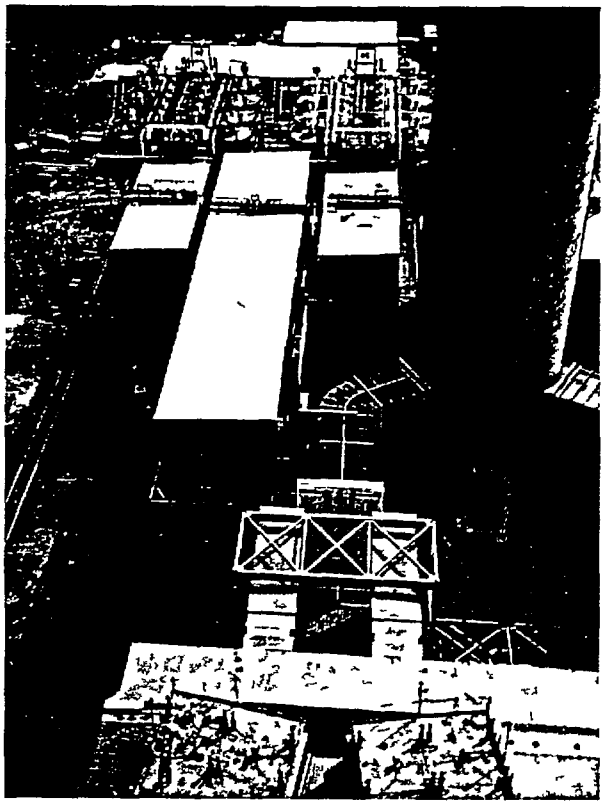

COHPAC

COHPAC developed and patented by EPRI allows coal fired boilers with undersized or inefficiently designed ESPs to achieve more stringent existing and pending particulate control standards Licensed to Research-Cottrell to offer commercially COHPAC is a cost effective alternative to adding a new larger ESP or fabric filter system or retrofitting existing equipment for

- Fuel switching problems
- Increased plant capacity
- Tighter emissions regulations

COHPAC I uses a pulse-jet fabric filter downstream of an energized ESP COHPAC II places the fabric filter within the existing ESP casing, further saving on valuable plant space With Research-Cottrell's installation at Texas Utilities, COHPAC is now a proven technolo gy that has been demonstrated to provide exceptional particulate collection efficiencies

For more information on Research-Cottrell's COHPAC technology, please call Richard Miller at (908) 685 4062 or Annette Mark at (908) 685 4203

Research-Cottrell

Air Pollution Control Division

Rt 22 West & Station Road
Branchburg NJ 08876
908 685 4000

PARTICULATE MATTER
POLLUTION PREVENTION AND CONTROL

Particulate matter (PM) emissions can be minimized by pollution prevention and emission control measures Prevention is frequently more cost effective than control

Approaches to Pollution Prevention

Management

Measures such as improved process design, operation, maintenance, housekeeping, and management practices can reduce emissions By improving the combustion efficiency, the amount of products of incomplete combustion (PICs), a component of particulate matter, can be significantly reduced. Proper fuel-firing practices and configuration along with adequate amount of excess air can help achieve lower PICs

Choice of Fuel

Atmospheric particulate emissions can be reduced by choosing cleaner fuels However, the choice of fuel is usually influenced by economic and environmental considerations The use of natural gas as fuel emits negligible amounts of particulate matter Oil-based processes also generate significantly less particulate emission than coal-fired combustion. Low-ash fossil fuels contain less non-combustible, ash-forming mineral matter and thus generate lower levels of particulate emission. Lighter distillate oil-based combustion results in lower levels of particulate emissions than heavier residual oils

Fuel Cleaning

Reduction of ash by fuel cleaning reduces the generation of PM emissions Physical cleaning of coal through washing and beneficiation can reduce its ash and sulfur content, provided that care is taken in handling the large quantities of solid and liquid wastes that are generated by the cleaning process An alternative to coal cleaning is the blending of higher and lower ash content coal. In addition to reduced particulate emissions low ash coal also contributes to better boiler performance and reduced boiler maintenance costs and downtime thereby recovering some of the coal cleaning costs For example, for a project in East Asia, investment in coal cleaning had an internal rate of return of 26 percent (World Bank, 1991)

Change of Technology and Processes

The use of more efficient technologies or process changes can reduce PIC emissions Advanced coal combustion technologies such as coal gasification and fluidized-bed combustion are examples of cleaner processes which achieve higher combustion efficiency and lower PICs (by approximately 10 percent) Similarly enclosed coal crushers and grinders emit lower PM

Approaches to Emission Control

A variety of particulate removal technologies are available with different physical and economic characteristics

Inertial or impingement separators rely on the inertial properties of the particles to separate them from the carrier gas stream Inertial separators are primarily used for the collection of medium-sized and coarse particles They include settling chambers and centrifugal cyclones (straight-through, or the more frequently used reverse-flow cyclones) Cyclones are low-cost, low-maintenance centrifugal collectors which are typically used to remove particulates in the size range of 10-100 microns (μm) (Henderson-Sellers 1984) The fine dust-removal efficiency of cyclones is typically below 70 percent compared to electrostatic precipitators (ESPs) and baghouses which have removal efficiencies of 99 9 percent or more Therefore cyclones are often used at a preliminary stage to other PM removal mechanisms They typically cost about US$1/cu.ft. per min. flow rate (Cooper and Alley 1986)

Electrostatic precipitators (ESP) remove particles using an electrostatic field to attract the particles onto the electrodes Efficiencies of collection for well-designed, well-operated, and well-maintained systems are typically

The information in this summary is for use by World Bank staff and consultants in carrying out the policies set out in OP 4 01 Environmental Assessment, and related documents

170

on the order of 99 9 percent or more of the inlet dust loading They are especially efficient in collecting fine particulates and can also capture trace emissions of some toxic heavy metals such as arsenic and chromium with an efficiency of 99 percent (Moore 1994)[1] ESPs are less sensitive to maximum temperatures than fabric filters and operate with very low pressure drop Their consumption of electricity is similar to those of the fabric filters (see Annex 1) ESP performance is affected by fly-ash loading, the resistivity of fly-ash, and the sulfur content of the fuel Lower sulfur concentrations in the flue gas can lead to a decrease in the collection efficiency (Babcock & Wilcox, 1992) ESPs have been used for the recovery of process materials (such as cement), as well as for pollution control They typically add 1 to 2 percent to the capital cost.

Filters and dust collectors (baghouses) collect dust by passing flue gases through a fabric which acts as a filter The most commonly used is the bag filter or baghouse The various kinds of filter media include woven fabric, needled felt, plastic, ceramic and metal (Croom, 1993) The baghouse operating temperature influences the choice of fabric Accumulated particles are removed by mechanical shaking, reversal of the gas flow, or a stream of high-pressure air Fabric filters are efficient (99 9 percent removal) for both high and low concentrations of particles but are suitable only for dry and free-flowing particles Their efficiency to remove toxic metals such as arsenic, cadmium, chromium, lead and nickel is greater than 99 percent (Moore, 1994) They also have the potential to enhance the capture of SO_2 in installations downstream of sorbent injection and dry-scrubbing systems (Babcock & Wilcox, 1992) They typically add 1 to 2 percent to the capital cost.

Wet scrubbers rely on a liquid spray to remove dust particles from a gas stream. They are primarily used to collect acid gas emissions, with particulate control as a secondary function. The major types are venturi scrubbers, jet (fume) scrubbers and spray towers or chambers Venturi scrubbers consume large quantities of scrubbing liquid (such as water) and electric power and incur high pressure drops Jet or fume scrubbers rely on the kinetic energy of the liquid stream. Typical removal efficiency of a jet or fume scrubber (for particles 10 mm or less) is lower than that of a venturi scrubber Spray towers can handle larger gas flows with minimal pressure drop therefore, they are often used as pre-coolers Wet scrubbers may contribute to corrosion, therefore the removal of water from the effluent gas of the scrubbers may be necessary Also the scrubbing results in a liquid effluent. Wet scrubbing technology is used where (a) the contaminant cannot be removed easily in a dry form (b) soluble gases are present (c) wettable particles are present, and (d) the contaminant will undergo some subsequent wet process (such as recovery wet separation or settling, or neutralization) Gas flow rates range from 20 to 3 000 m^3/min with typical applications for gas flow rates of approximately 2 000 m^3/min and a corresponding pressure drop of 25 cm water column (Bouncore and Davis 1992)

Equipment Selection

The selection of PM emissions control equipment is influenced by (a) environmental (b) economic, and (c) engineering factors

Environmental factors include (a) the impact of control technology on ambient air quality, (b) the contribution of pollution control system to the volume and characteristics of wastewater and solid waste generation, and (c) maximum allowable emission requirements

Economic factors include (a) the capital cost of investment in control technology (b) operating and maintenance costs of technology and (c) expected lifetime and salvage value of the equipment

Engineering factors include (a) contaminant characteristics such as physical and chemical properties concentration particulate shape size and distribution, chemical reactivity corrosivity abrasiveness toxicity and so forth (b) gas stream characteristics such as volume flow rate dust loading temperature pressure humidity

[1] However controlling emissions of many heavy metals which are present as trace elements in fuels—such as cadmium, lead and mercury—is a difficult and largely unsolved problem

171

composition, viscosity, density, reactivity, combustibility, corrosivity, toxicity, and so forth, and (c) design and performance characteristics of the control system such as pressure drop, reliability, dependability, compliance with utility and maintenance requirements temperature limitations, as well as size, weight, and fractional efficiency curves for particulates and mass transfer and/or contaminant destruction capability for gases or vapors

Annexes 1 and 2 present the main advantages, disadvantages, and the relative rating of the various emission control equipment Electrostatic precipitators (ESPs) can handle very large volumetric flow rates at low pressure drops, and can achieve very high efficiencies (99 9 percent) They are roughly equivalent in costs to fabric filters and they are relatively inflexible to changes in process operating conditions Wet scrubbers can also achieve high efficiencies and have the major advantage that some gaseous pollutants can be removed simultaneously with the particulates However, they can only handle smaller gas flows (up to 3,000 m^3/min), can be very costly to operate (owing to a high pressure drop) and they produce a wet sludge that can present disposal problems (Cooper and Alley 1986) Annex 2 presents a comparison of the emission control equipment for a unit handling 2,200 m^3/min (60 000 ft^3/min) of dust laden gas at 20°C For a higher flue gas flow rate and greater than 99 percent removal of PM, ESPs and fabric filters are the equipment of choice with very little difference in costs

Recommendations

For effective PM_{10} control in industrial application, the use of ESPs or baghouses is recommended. These should be operated at their design efficiencies In the absence of a specific emissions requirement, a maximum level of 50 mg/Nm^3 should be achieved.

For gases containing soluble toxics and where the gas flow rate is less than 3,000 m^3/minute, wet scrubbers may be used Cyclones and mechanical separators should only be used as precleaning devices upstream of a baghouse or an ESP

Key Issues for Pollution Prevention and Control Planning

The following box summarizes the principal methods for controlling the release of particulate matter

- Identify measures to improve operating and management practices
- Consider alternative fuels (such as gas instead of coal)
- Consider fuel cleaning options (such as coal washing to reduce ash by 40 percent)
- Consider alternative production processes and technologies (such as fluidized bed combustion) which result in reduced PM emissions
- Select optimal particulate removal device(s) (such as ESPs and baghouses)

Further Information

The following are suggested as sources of additional information (these sources are provided for guidance and are not intended to be comprehensive)

Babcock & Wilcox Co 1992 *Steam - Its Generation and Use* S C Stultz and J B Kitto eds Barberton Ohio The Babcock & Wilcox Company

Bouncore A.J and W T Davis 1992 *Air Pollution Engineering Manual* New York Van Nostrand Reinhold

Cooper D D and F C Alley 1986 *Air Pollution Control A Design Approach* Prospect Heights Illinois Waveland Press Inc

Croom Miles L July 1993 Effective Selection of Filter Dust ' *Chemical Engineering*

The information in this summary is for use by World Bank staff and consultants in carrying out the policies set out in OP 4 01 Environmental Assessment and related documents

176

Hanly, Jim and John Petchonka. July, 1993 "Equipment Selection for Solid Gas Separation." *Chemical Engineering*

Henderson-Sellers Dr B 1984 *Pollution of our Atmosphere* Bristol Adam Hilger Ltd.

Jechoutek, Karl G et al 1992 *Steam Coal for Power and Industry* Industry and Energy Department Working Paper Energy Series Paper No 58 Washington, D C The World Bank.

Moore, Taylor Jan /Feb 1994 "Hazardous Air Pollutants Measuring in Micrograms " *EPRI Journal* Vol. 19 No 1

Vatavuk, William, M. 1990 *Estimating Costs of Air Pollution Control* Chelsea, Michigan. Lewis Publishers

World Bank. 1991 "China-Efficiency and Environmental Impact of Coal Use " Report No 8915-CHA. Industry and Energy Division, China Department, Asia. Washington, D C

The information in this summary is for use by World Bank staff and consultants in carrying out the policies set out in OP 4 01 Environmental Assessment, and related documents

172

Annex 1 Advantages and Disadvantages of the Main Particulate Control Technologies

Advantages	*Disadvantages*
Cyclone Separators • Low capital cost (approximately $1/cu ft per minute flow rate), • Relative simplicity and few maintenance problems, • Relatively low operating pressure drop (for the degree of particulate removal obtained) in the range of approximately 2 to 6 inches water column, • Temperature and pressure limitations imposed only by the materials of construction used, • Dry collection and disposal, and • Relatively small space requirements	• Relatively low overall particulate collection efficiencies, especially for particulate sizes below 10 µm, and • Inability to handle sticky materials
• **Wet Scrubbers** • No secondary dust sources, • Relatively small space requirement, • Ability to collect gases, as well as particulates (especially "sticky" ones), • Ability to handle high-temperature, high-humidity gas streams, • Low capital cost (if wastewater treatment system is not required) • Insignificant pressure drop concerns for processes where the gas stream is already at high pressure and • High collection efficiency of fine particulates (however at the expense of pressure drop)	• Potential water disposal/effluent treatment problem, • Corrosion problems (more severe than with dry systems), • Potentially objectionable steam plume opacity and/or droplet entrainment; • Potentially high pressure drop (approximately 10 inches water column) and horsepower requirements, • Potential problem of solid buildup at the wet-dry interface and • Relatively high maintenance costs
• **Electrostatic Precipitators** • Collection efficiencies of 99 9 percent or greater for coarse and fine particulates at relatively low energy consumption • Dry collection and disposal of dust • Low pressure drop (typically less than 0 5 inch water column) • Continuous operation with minimum maintenance • Relatively low operation costs • Operation capability at high temperatures (up to 1300 °F) and high pressure (up to 150 psi) or under vacuum and • Capability to handle relatively large gas flow rates (of the order of 50 000 m^3/min)	• High capital cost (approximately $15/sq ft of plate area), • High sensitivity to fluctuations in gas stream conditions (flow rates temperature particulate and gas composition, and particulate loadings) • Difficulties with the collection of particles with extremely high or low resistivity, • Relatively large space requirement for installation • Explosion hazard of dealing with combustible gases or particulates, • Special precautionary requirements for safeguarding personnel from high voltage • Production of ozone by the negatively charged electrodes during gas ionization, and • Highly trained maintenance personnel requirement

Annex 1 Advantages and Disadvantages of the Main Particulate Control Technologies (continued)

114

Advantages	*Disadvantages*
Fabric Filter Systems • Very high collection efficiency (99 9 percent) for both coarse and fine particulates, • Relative insensitivity to gas stream fluctuations and large changes in inlet dust loadings (for continuously cleaned filters), • Filter outlet air can be recirculated, • Dry recovery of collected material for subsequent processing and disposal, • No corrosion problem, • Simple maintenance, flammable dust collection in the absence of high voltage, • High collection efficiency of submicron smoke and gaseous contaminants through the use of selected fibrous or granular filter aids, • Various configurations and dimensions of filter collectors, and • Relatively simple operation.	• Requirement of costly refractory mineral or metallic fabric at temperatures in excess of 550 °F, • Need for fabric treatment to remove collected dust and reduce dust seepage of certain dusts; • Relatively high maintenance requirements, • Explosion and fire hazard of the concentration (~50g/m^3) of certain dusts in the presence of accidental spark or flame, and fabric fire hazard in case of readily oxidizable dust collection, • Shortened fabric life at elevated temperatures and in the presence of acid or alkaline particulate or gas constituents, • Potential crusty caking of plugging of the fabric, or need for special additives due to hygroscopic materials, moisture condensation, or tarry adhesive components, • Respiratory protection requirement for fabric replacement, and • Medium pressure-drop requirements (typically in the range of 4 to 10 in water column)

Source Adapted from Bounicore and Davis 1992

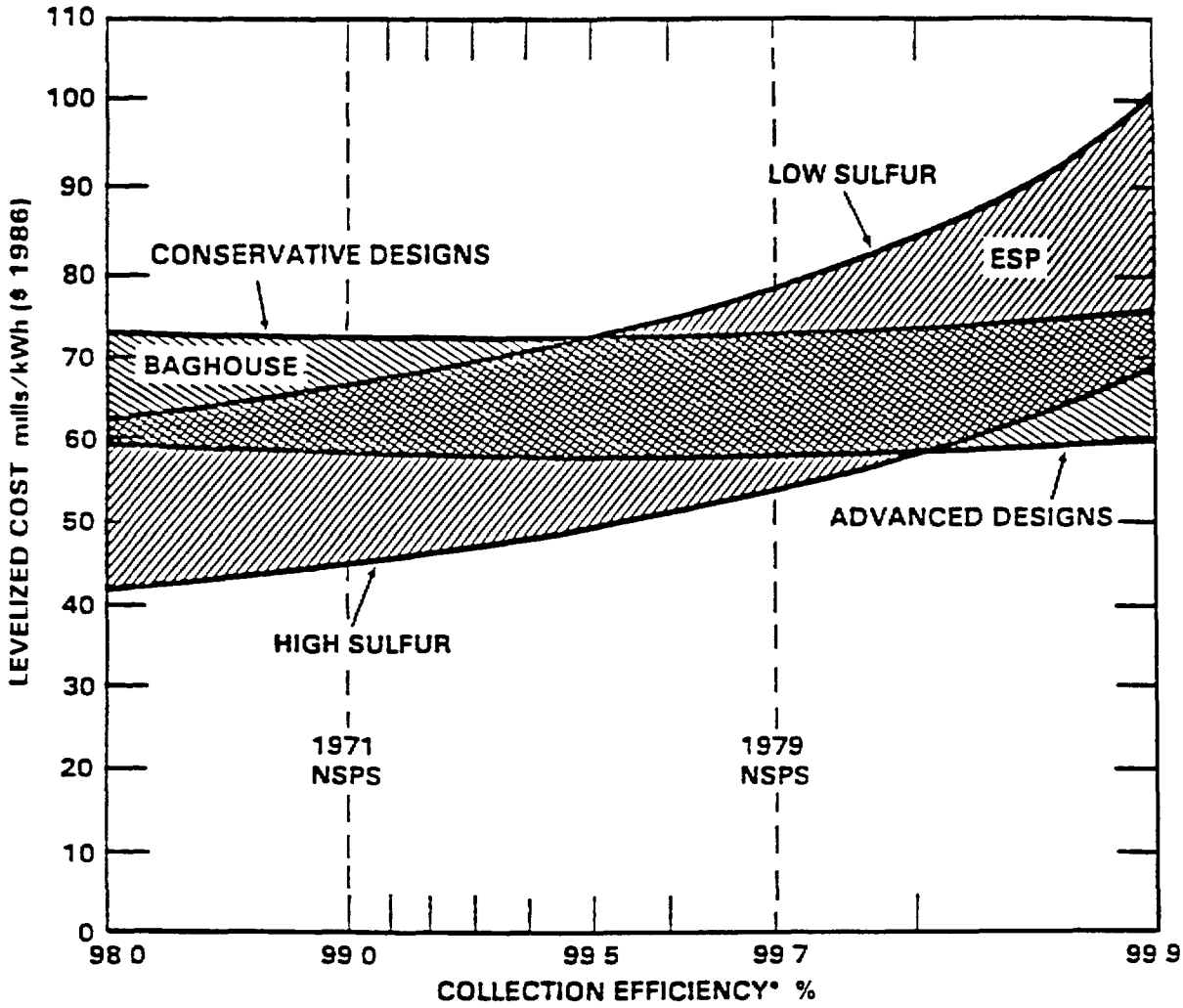

* BASED ON A COAL RATED AT 10 000 Btu/lb AND CONTAINING 10% ASH THE 1971 NSPS IS 0 1 lb/10^6 Btu AND THE 1979 NSPS IS 0 03 lb/10^6 Btu

Levelized cost for baghouses and ESPs expressed as a function of nominal collection efficiency

Annex 2. Relative Rating of Dust Collection Equipment
(for a unit handling 60 000 ft^3/min of dust-laden gas at 20°C)

		Rating (1 lowest, 10 highest)			
Type of device	*Typical efficiency on typical dust (%)*	*Capital cost*	*Operating cost*	*Average pressure drop*	*Applicable particle size (μm)*
Settling chamber	60	1	1	< 1	>150
Cyclone	85	2	2	1 - 3	>10
Jet scrubber	88	4	4	-	-
Spray tower	95	6	6	2 - 7	>3
ESP	99	10	1	0 25 - 0 5	>0 001
Fabric filter (shaker)	99	8	5	1 - 10	>0 5-1 0
Venturi scrubber	99	5	10	15 - 30	>0 3-1 0
Fabric filter (reverse jet)	99	9	9	1 - 10	>0 5-1 0

Source Hanly and Petchonka, 1993

L \WPEU\GUIDELNS\HANDBOOK\ON_HOLD\PMC0795 DOC
December 1 1995 11 23 AM

177

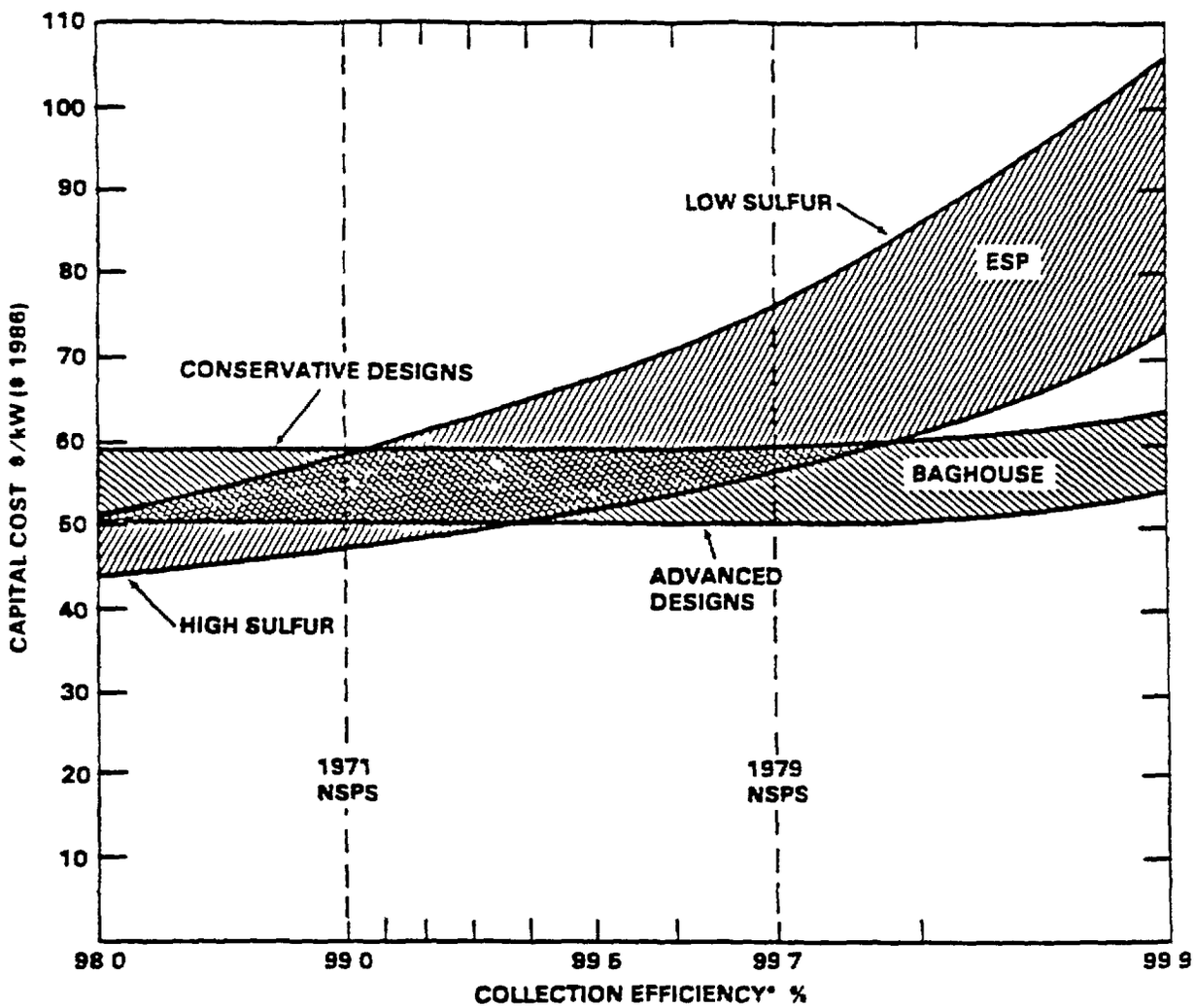

* BASED ON A COAL RATED AT 10 000 Btu/lb AND CONTAINING 10% ASH THE 1971 NSPS IS 0 1 lb/10^6 Btu AND THE 1979 NSPS IS 0 03 lb/10^6 Btu

Capital costs for baghouses and ESPs expressed as a function of nominal collection efficiency

Burns and Roe Enterprises, Inc

Technical Report

KAZAKSTAN REGIONAL ENVIRONMENTAL IMPROVEMENT STUDY

REGIONAL POWER PLANT SURVEY

DJAMBUL POWER STATION

FINAL REPORT

December 1996

Prepared by	Local Kazakstan Specialists and Burns and Roe Enterprises, Inc
Submitted to of Kazakstan	U S Agency for International Development and The Government
Contract No	CAN-0002-Q-00-3154-00 Regional Environmental Improvement Study Delivery Order No 9, Task 4

REGIONAL SURVEY REPORT

Table Of Contents

Executive Summary

1 0 INTRODUCTION 1

1 1 Background 1
1 2 Facility Operations 1

2 3 THE FACILITY 2

2 4 Location 2
2 5 History and Environmental Setting 2
2 6 Facility Description 3
2 7 Environmental Management Structure 3

3 0 CHARACTERISTICS OF FACILITY EMISSIONS 4

3 1 Air Emissions 4
3 1 1 Emissions Sources 4
3 1 2 Emissions Limits 5

3 2 Water Supply and Liquid Waste Effluents 6
3 2 3 Sources of Water Supply 7
3 2 4 Liquid Effluents 9
3 2 5 Effluent Treatment 10

3 6 Materials Handling and Storage 15
3 3 7 Storage of Chemicals 16
3 3 8 Storage of Mazut 16
3 3 9 Storage of Fly Ash and Bottom Ash 17

3 10 Oil-Filled Electrical and Hydraulic Equipment 20
3 11 Asbestos 22
3 12 Waste Management 23
3 13 Contaminated Soil and Groundwater 25

4 0 SUMMARY OF ENVIRONMENTAL COMPLIANCE 26

4 1 Air Emissions 27
4 2 Water Supply and Liquid Effluents 28
4 3 Materials Handling and Storage 29
4 4 Contaminated Soil and Groundwater 30

5 0 CONCLUSION 32

6 0 RECOMMENDATIONS FOR MITIGATION & REMEDIATION OF EMISSIONS

6 1 Air Pollution 35
6 2 Water Pollution 37

Appendices

Appendix 1 -

Appendix 2 - Site Plan Explanation Code

Appendix 3 -

Appendix 4 -

Appendix 5 -

Appendix 6 -

Appendix 7 -

Appendix 8 -

Appendix 9 -

Appendix 10 -

Appendix 11 -

Appendix 12 -

Appendix 13 -

Appendix 14 -

Appendix 15 -

Appendix 16 -

Appendix 17 -

Appendix 18 -

Appendix 19 -

Appendix 20 -

Appendix 21 -

Appendix 22 -

Appendix 23 -

Appendix 24 -

Appendix 25 -

List of References

1 Climate handbook, issue 18, L , 1966,

2 Gorbacheva A P , Gurzha D M Account on surface water protection from polluting source in the territory of Djambul oblast for 1976, v Mikailovka, 1980,

3 The Constitution of the Republic of Kazakstan,

4 Nature Environment Protection Law Adopted June 18, 1991, came into effect August 1, 1991,

5 Water Code of the Republic of Kazakstan,

6 Air protection law of Kazakh SSR Adopted June 12, 1981 News of Supreme Soviet of Kazakh SSR, 1981, No 25

7 Typical instruction for industrial air emission control system organization in industrial branches L , 1986,

8 Rules of emission control organization at heat power stations and boiler rooms RD 34-02-301-91 M SPO ORGRES, 1991,

9 Methodical specifications Organization, order of fulfillment of analytical control for air polluting sources The basic requirements Almaty, 1992,

10 Instructions for sampling and analysis,

11 Guidebook for air polluting source controlling OND-90, parts 1, 2, S -P , 1992,

12 A list of certified and temporarily allowed to usage (till 2000) techniques of component content determination in natural and waste waters It is agreed with National Standard Department and Kazhydromet and approved by Ministry of Ecology and Bioresources 05 05 1995,

13 Rules of surface water protection in the Republic of Kazakstan RND 1 03 03-94,

14 Instruction for air and water polluting substance emission (discharge) normalizing M , 1989,

15 Techniques of calculation of harmful substance concentrations in the enterprise emissions OND-86 M , 19 ,

16 Techniques of calculation of limiting-allowable emissions (LAE) for water polluting substances in the Republic of Kazakstan, Almaty, 1994,

17 Examination of Djambul power station by Yuzhkazenergo to reveal sources, amount and reasons of pollution of industrial waste waters Technical report inv No 713 VK RSPP "Kazenergonaladka", Almaty, 1985,

18 Project of standards for limiting-allowable (temporarily agreed upon) emissions of harmful substances in air by Djambul power station POEiE "Yuzhkazenergo", vol 1 Kaztekhenergo, Almaty, 1993

1 0 INTRODUCTION

1 1 Background

The Djambul Power station is located in southern Kazakstan, in the city of Djambul, within the oblast of Djambul The facility mailing address is

484051, Djambul City
Djambul Power Station
Republic of Kazakstan

The Director of the station is Afanasiy Ni (telephone-721035) and the Chief Engineer is Vladimir P Kokorev (telephone-7210351, 3-05-10, fax-3-14-66) The following key plant staff were involved in the facility audit

Malik A Utegenov - Deputy Chief Engineer
Nina M Taradeyeva - Deputy Chief of Technology Department
Raisa P Nevezhina - Ecology Engineer
Mikhail G Potapov - Chief of The Biological Treatment Department

The following reprsentatives of the Djambul oblast Department of Ecology participated in discussions with the audit team in support of this audit

Aldiyar A Tusupov - Chief of the Department of Ecology
Abdugulov U Baurzhan - Deputy Department Chief
Almurat Z Kobesov - Chief of Department of Water Resources Protection
Anna I Kudryavtseva - Chief of Department for Control Air Pollution Control

The audit team was comprised of the following members

Burns and Roe Company
John Doyle - Principal Mechanical Engineer
Gennady Doroshin - Leading Power Plant Specialist of the Kazakstan Scientific Research Institute of Power Engineering

Local Kazakstan Specialists

- Alexander Pescherov - Senior Specialist at Kazakstanenergo
- Ludmila Ljashenko - Head of the Ministry of Ecology and Bioresources Scientific Research Department for Ecology Problems
- Rafail Akhmetov - Chief of the Ecology Department at Kazakstanergo
- Mikhail Hojatelev - Leading Scientific Specialist at the Kazakstan Scientific Research Institute of Power Engineering
- Gennady Kropochev - Chief of the Testing Department at Ekibastuz Power Plant No 2
- Alexander Parucimov - Leading Specialist at the Almaty Ecology and Bioresources Department

This environmental audit was performed as part of a regional survey of power plants performed as part of a USAID funded "Regional Environmental Improvement Study" of environmental problems within the power sector of Kazakstan This study, along with the related audits, was directed by Burns and Roe Company in cooperation with Kazakstanenergo and the Ministry of Ecology and

Bioresources of Kazakstan The audit was performed in accordance with the guidelines of the European Bank for Reconstruction and Development as presented in their document "Environmental and Health & Safety Standard Audit Report Format" The purpose of this audit was twofold The primary purpose of the audit, as part of the regional survey effort, was to characterize the current emission levels at the facilities investigated in order to develop recommendations for technology improvements which would be applicable to the power sector of Kazakstan In this regard, the Ekibastuz facility was chosen for audit since its emission problems are considered to be representative of those of the power sector in general The second purpose of performing the audit was to serve as an opportunity for the team of local specialists to apply the classroom training received earlier in the Study regarding how to perform an environmental audit and how to western technologies could be applied to mitigate current emissions problems

The audit was performed for gaseous, liquid, and solid emissions It assessed the current discharges and the conditions which generate them, the methods of reporting emission levels, the technology currently in place to deal with these emissions, and plans to reduce emission levels Available documentation, such as research reports, facility records, conclusions of committees, etc were analyzed

In discussion of the audition program and its results the following representatives of the station participated

Vladimir P Kokorev - Chief engineer of the station,

Malik A Utegenov - Chief engineer's deputy for operation,

Nina M Taradeyeva - deputy of chief of technological department,

Raisa P Nevezhina - ecology engineer,

Mikhail G Potapov - chief of treatment equipment of biological treatment

From Oblast department for Ecology of Djambul oblast the following participated in discussion of the audition program and its results

Aldiyar A Tusupov - chief of Department,

Abdugulov U Baurzhan - deputy of the chief,

Almurat Zh Kobesov - chief of water resources protection department,

Anna I Kudryavtseva - chief of department of National Control for air protection

To discuss audition matters and urgent ecological problems, concerned with operation of the station, united seminar with the participation of employees of the station and Oblast Department was held

Audition was carried out according to methodology of European Bank of Reconstruction and Development and consisted of fulfillment of an estimation of the enterprise influence upon the environment according to official data and documents available

The audition covered gas, liquid emissions, solid emissions, condition of normalization of their emitting in environment, organization of monitoring systems for environmentally polluting sources, analysis of technical characteristics of the equipment and emission treatment technologies,

used at the enterprise, plans for stage achievement of normative values for emissions, wastes, and their cost characteristics

During the work available materials as the scientific-technological reports, records, conclusions of commissions, statistical accountability of the station, approved limiting-allowable emissions (LAE), permits for emissions, disposition of waste etc were analyzed

The audition included practical getting acquainted with the station and equipment, treatment constructions, ash disposals, places of chemicals, coal, mazut storage etc

1 2 Facility Operations

Djambul power station is the basic source of the electric power for southern Kazakstan It is the first power station of block type in republic, one of the most powerful in the region The established electrical capacity of the station amounts to 1,230 MWt Gas and mazut are used as fuel on the station

2 0 THE FACILITY

2 1 Location

Djambul power station is located south-east of city of Djambul, 8 km from the city which has been one of the largest cities of medieval Kazakstan (ancient name of the city is Taraz), it was situated on "Great silk road" from China to Europe

2 2 History and Environment Setting

The construction of Djambul power station started in 1964 to supply electric power to fast-developing chemical industry of southern Kazakstan, it was made in two stages

The capacity of the first stage of the power station was determined at 600 MWt with forward flow gas and mazut boilers The first stage of construction was completed in 1979 with start-up of energetic block

Construction of the second stage of the power station started in 1974 which was equipped with monoblocks with a capacity of 210 MWt After start-up of the sixth block in 1976 the construction of the second stage of the station was completed

The owner of the power station until recently was National Company Kazakstanenergo At present the power station as well as other power enterprises of Kazakstan is prepared to be made private

The power station is located in Kar-Tau foothills, of Kyrgys Alatau, on fertile Talas valley near them

Immediately near the power station there is no natural reserves and recreational zones, however, Aksu-Jabagly reserve of republic importance is located approximately 200 km from the station

The relief of area is slightly hilly with difference in heights less than 50m for 1 km in radius up to 50 maximum heights of chimney of the station Therefore the relief factor in scattering calculation is determined to be equal 1

The basin of Assy and Talas rivers is on a joint of two large geological structures - mountain-folding and platform ones considerably different hydro-geologically

The climate conditions are characterized by continental and relative dry character An average annual temperature of air in the basin ranges from 3 9°C in mountain part to 9 5°C in semi-desert and desert ones The lowest temperatures of air are observed in January - February From February to March intensive increase of air temperature begins The maximum values are observed in summer months from June to August

The atmospheric precipitation in the territory is allocated unevenly increasing with height of the area As a whole for Djambul area precipitation drops little, especially in its plain parts (less than 250 mm a year) Peculiarity for the territory is significant prevalence of spring and summer precipitation comparatively with wintry one Appearance of snow is usually observed in November Snowy period lasts from 2 till 3 5 months in plains and up to 5 months in mountains The snow cover is insignificant, on an average it is up to 14-16 cm, however, in foothills and mountains a height of the snow cover reaches 20-70 cm Disappearance of the snow cover begins in February and ends in the middle of April

The average annual speed of wind, according to data of meteorological station, ranges from 2 8 to 3 2 m/s The maximum values of speed of wind in a considerable part of the territory take place in spring or in the beginning of summer In general winds of east and north-east directions prevail [1]

All explored deposits of underground waters have hydraulic interrelation with surface waters of the various Rivers, small Rivers, springs [2] As a rule the irrigation agriculture prevails

Djambul oblast is a large industrial, agrarian and cultural center Mining industry and phosphoric compositions and yellow phosphorus industry were specially developed here

In suburbs of Djambul agricultural lands are located

Oalas mountain river is a source of water supply, it is regulated upstream in the territory of the Republic of Kyrghyzstan by Kirov reservoir

Immediately near the station settlements of power station employees called "Solnechny" (2,820 inhabitants) and "Pionersky" (Appendix 1) are located

The staff at Djambul power station together with contract organizations amounts 1,592 people

2 3 Facility Description

The power station has block type configuration boiler-turbine-generator-transformer

The diagram of configuration for the first stage - double-block, the second stage - monoblock (Appendix 2)

In boiler room three two-case forward flow steam generators and three one-case steam generators with natural circulation are installed

On the open ground behind the main building the blowing mechanisms and regenerative air warmers are located

Removal of flue gases from steam generators is fulfilled through two chimneys 180 m high

The united auxiliary building consists of two blocks - one-storeyed and four-storeyed ones In the one-storeyed part of the building there are water chemical treatment with a chemicals storehouse, central repair rooms, electrolyzer room In four- storeyed part of a building laboratories of room of

thermal automatics, electric room and chemical room, communication unit, laboratories, household rooms etc are located

The water chemical treatment is intended for compensation of steam and condensate losses in a cycle of the power station The installation works in a cycle of three-stage desalination with preliminary coagulation in sedimentation units Capacity of water chemical treatment is 210 tons/hour For energetic blocks of the first stage 100% desalination of the condensate is determined

The basic fuel for the station is gas from a Bukhara deposit Mazut is used as the reserve fuel The mazut facilities consist of the three-way receipt-drainage device, two mazut-pump rooms and storehouse of mazut

The system of technical water supply consists of water intake unit on Talas river, turnaround system, complex of industrial waste water treatment constructions (CIWT) and sanitary waste water treatment constructions

Djambul power station has the following structure of the capital equipment

Steam boilers

Type	Amount	Steam capacity, tons/hour
PK-47-3	3	640
TGME-205	3	670
Total steam capacity, tons/hour		3930

Turbines

Type	Amount	Capacity, ÌWt
Ê-200-130-1LMZ	3	200
Ê-210-130-3LMZ	3	210
Total capacity of turbines installed, IWt		1230

The steam generators of the first stage of PK-47-3 type, which are made by Podolsk boiler factory (Russia), are two-case

The steam generators of the second stage is one-case, with natural circulation, with P-type configuration The boiler has two independent flows in a steam path and is equipped with temperature controlling systems primary superheating system is of injection type, secondary superheating system is of flue gas recycling

The design energy production must be about 8,000 MWt/hour

The actual technological parameters of Djambul power station operation are represented in Appendix 1 As seen from Appendix the actual electric power production in 1995 was about 50% of design value, which, however, is higher than values for electric power produced in 1993-1994

The ratio of gas-mazut varied annually

Years	Gas	Mazut
1993-1994		57-58%
1995	77%	

1996 (4 months)		61%

2 4 Environment Management Structure

In the field of environment protection, the management of Djambul power station directs its the activity in accordance with the current legislation

- the Constitution of the Republic of Kazakstan,
- Environmental protection law,
- Water code of the Republic of Kazakstan,
- Air protection law

The chief engineer conducts environment protection activity at the station

The basic problem is observance of the requirements of the nature protection legislation, applicable standards and rules under operation of the equipment at the station

Chief engineer is responsible for distribution of duties related to environment protection among industrial subdivisions and the officials, keeping control for their activity, consideration and approve of the plans of nature protection measures, providing appropriate reaction to the instructions of the appropriate supervising bodies
All divisions, activity of which is concerned with formation of emissions of polluting substances in air, water waste, industrial waste, with treatment and rendering water waste harmless, namely boiler, fuel-handling, chemical rooms and hydraulic engineering constructions, are directly subordinate to chief engineer

The main task of boiler room management is observing regulations on emission of polluting substances under operation of boilers The functions of the personnel are defined by rules of technical operation of equipment and by official instructions

Providing periodic gauging concentrations of nitrogen oxides, sulphur, carbon oxides in flue gases of boilers is carried out by adjustment room

Task of fuel-handling room is providing operation of aspiration plants on unloading, transportation and crushing the fuel
Tasks of chemical room are rendering industrial waste water harmless at a complex of industrial waste water treatment constructions (CIWT), neutralization of acid and alkaline water waste from water conditioning construction, control for chemical composition of water from Talas river etc

Tasks station of waste water biological treatment are providing operation of sanitary waste water treatment complex of the enterprise and Solnechny settlement

Adjustment and heating-power equipment testing room (AHETR), technological (TD) and economic (ED) departments In the TD a position of an ecology engineer is established, who is responsible for interaction with environment protection supervising bodies, providing preparation of the emission specifications, coordination and approve of them in ecology supervising bodies, obtaining permits for usage of nature resources, taking steps in response to the instructions of ecological and sanitary supervising bodies

The control for emission quality as well as surface waters in a zone of influence of the station analytical laboratory of the station provides, which works according to control schedule agreed upon with Oblast Department for Ecology and Bioresources

The air and water emission control is performed according to the branch industrial Instruction and Rules, agreed upon with ecology supervising bodies (Appendices 7, 8), and in accordance with the Methodical instructions on organization and order of realization of the analytical control for air pollution sources, approved by Ministry of Ecology and Bioresources of the Republic of Kazakstan [9], Instruction for sampling and analysis of waste and surface waters [10]

The emissions control is fulfilled by determination of weight of polluting substance emissions per a unit of time from the given source and comparing the received results with the established specifications

The rules provide organization of registration of harmful substance emissions at the power station with flue gases (or waste waters) from chimneys (or discharge of waste waters), account of emissions (discharges) and reporting under the emissions control

The emissions from low sources and ventilation systems, as well as emissions from mobile sources are not supervised owing to insignificant pollution created by them outside industrial platform of station

The emission control is carried out by the station itself and is made periodically (monthly) Maximum emissions per a month (grams per second) and total ones (tons per a month) are determined

It should be noted that the station has presented actual data for emissions for 1996 only

Maximum and total emissions of nitrogen and sulfur oxides are determined by calculation using results of scheduled instrumental measurements of the substance content in flue gases

Sampling of flue gases at the emission control is made beyond the chimney The measurements are made at maximum or close to maximum boiler load

As determined in the branch specifications OND-90 [11], "built chimneys by the present time at heat and power stations are not equipped with sampling places for the analysis, however, practically all chimneys removing the flue gases directly from the boilers are equipped with measuring sections The actual value of polluting substance emissions from the chimneys is determined in this case by summation of emissions measured for each boiler"

Determination of emissions is made for separate boilers connected to the given chimney and for the power station as a whole

Calculation of total emissions in a month is made using the following parameters

- fuel consumption - according to data of design group of the technological department,
- the sulfur content, heat of fuel combustion (average in a month) - according to data of chemical laboratory or according to the certificates,
- monthly average operational boiler load and other parameters of boiler operation - according to 3-tekh (energo) type accountability

Calculation of maximum monthly emissions is made using the following parameters

- the maximum daily consumption of the lowest grade fuel by a group of boilers connected to a chimney,

- the other parameters - like it is made at determination of total emissions but averaged for the minimum period including days when the maximum consumption of fuel took place

To take into account air emissions logs according to approved form are kept at the station

Supervision over quality of waste and surface waters is made by station laboratory, certified by National Standard Committee, together with Oblast Department for Ecology and Bioresources by techniques included in "List of temporarily allowed " [12] and approved by Ministry of Ecology and Bioresources

The used devices pass metrologycal check in National Standard Committee annually

The used methods of the water analysis (visual, gravimetric, volumetric and photometric) are included in the List of methods, recommended to be used by Ministry of Ecology and Bioresources

The frequency of realization of the analyses and sampling places are coordinated with Oblast Department for Ecology and Bioresources

Sampling and analysis of normative-pure waters are carried out monthly, sanitary waters quarterly
Sampling and analysis of water meet the methodical requirements of "Instruction on sampling waste and surface waters", approved by Ministry of Ecology and Bioresources
However, automatic continuous sampling and analysis of discharges at the station is absent, though only it provides objectivity and reliability of the analysis
Biological monitoring by a method of biotesting is not also performed which is obligatory according to "Rules of protections " [13]

The regular supervision for intakes located on Oalas river are also carried out by Djambul Department for hydrometeorology according to the Republican Program of supervision

3 0 CHARACTERISTICS OF FACILITY EMISSIONS

3 1 Air emissions

3 1 1 Emission Sources

According to inventory approved by Djambul Oblast Department for Ecology in 1993 in territory of the station the following sources of air pollution are registered

Three organized sources

- chimney of station No 1 with connected to it PÊ-47-3 type boilers Nos 1, 2, 3,
- chimney of station No 2 with connected to it PME-206 type boilers Nos 4, 5, 6,
- chimney of station No 3 (starting boiler room with five DKVR-6 5/13 boilers)

Twelve unorganized sources in different rooms among which the mazut facilities, metal and wood processing machine-tools of the rooms, the metal cutting and welding posts, car transportation enterprises

The polluting substances include

- from organized sources - sulfur, nitrogen and carbon oxides, vanadium oxide,

- from unorganized sources - hydrocarbons, carbon oxide, nitrogen dioxide, suspended substances, manganese dioxide, fluoric hydrogen, welding spray, sulfur and nitrogen dioxides, abrasive, metal and wooden dust

The particular structure of emissions and there quantitative characteristics are represented by the station as the annual reports by the form No 2-OP (air) required by the republican legislation The reports for 1993-1995 are represented in Appendix 3

Description of basic elements of the equipment

The characteristics of chimneys

- station No 1 - 180 m high, orifice diameter of 8 0 m, speed, volumetric charge and temperature of gases at outlet at maximum load are equal 15 8 m/s, 796 m^3/s, 151°Ñ respectively,

- station No 2 - 180 m high, orifice diameter of 7 6 m, speed, volumetric charge and temperature of gases at maximum load are equal 21 9 m/s, 993 m^3/s, 160°Ñ respectively,

- station No 3 - 33 m high, orifice diameter of 1 5 m, speed, volumetric charge and temperature of gases at maximum load are equal 6 1 m/s, 10 8 m^3/s, 130°Ñ respectively

Structure of the capital equipment

Steam boilers
- PK-47-3, one-case, with a steam capacity of 640 tons/hour - 3 units
- OGME-206, one-case, with a steam capacity of 670 tons/hour, with total steam capacity of 3930 tons/hour - 3 units

Turbines
- Ê-200-130-1 LMZ with a capacity of 200 IWt - 3 units
- Ê-210-130-3 LMZ with a capacity of 210 IWt - 3 units

Harmful substance emitting sources are steam boilers working on gas and mazut as well as DKVR-6 5/13 boilers of starting boiler room working on mazut

Design fuel for the basic boilers is gas, reserve one - mazut
The characteristics of fuel
mazut Q_1 = 9,400 kcal/kg, ash content 0 3%, sulfur content 2 48%,
gas Q_1 = 8,200 kcal/kg

Conditional fuel consumption reaches on the basic boilers 69 6 - 69 8 tons/hour,
on boilers of starting boiler room 0 7 tons/hour

Fuel consumption by conditional and natural units for 1993-1995 is represented in tables of Appendix 4

For instance, for 1995 it amounted to 1,443 thousand tons of conditional fuel or 243 thousand tons of mazut and 952 10^6 nm^3 of gas The actual ratio of gas and mazut consumption is on an average 50% / 50% The specific consumption of fuel is about 348 g/kWt-hour

The characteristics of the boilers is represented in tables of Appendix 5
The tables contain the following data

the system of burning (burner), design and operational steam capacity (640 tons/hour / 550 tons/hour), steam pressure (140 atm), steam temperature (545 °Ñ), feeding water temperature (243 °Ñ), flue gas temperature (137-180°Ñ), the boiler efficiency (91-94 %), description of NO_x-emission decrease system (plan measures), mazut and gas consumption for particular boiler, volumetric charge of flue gases (620-720 thousand m^3/hour), air surplus degree in flue gases (1 31-1 34), specific volume of flue gases per 1 kg of fuel (13 9-14 5 m^3/kg) and operating time in hours for 1995 (1900-6000 hours)

Other characteristics of boiler with the drawings of a cross section and data on commissioning (1967-1976) are represented in Appendix 6

The general diagram of one of the OGIÅ type boilers and diagrams of flue gas ways for boiler of both types are represented in Appendix 7

The technical information on the boiler equipment (regenerative air warmers, flue gas pumps, blasting fans, the fans of hot air recycling) are represented in the same Appendix

The capital equipment emissions

The organized sources of the station emit sulfur, nitrogen, vanadium and carbon oxides The station has no flue gas treatment equipment The emission control is performed by calculation using the characteristics of fuel and its consumption according to special branch technique as well as by instrumental way (SO_2, NO_X emissions and gas transparency)

Nitrogen Oxides
The content of the polluting substance wholly depends on a type of fuel and way of its burning
The modes of boiler operation are in detail represented in mode cards (Appendix 8)
The type of used mazut and gas burners, diagram of connection of secondary air pipe to the burner of the top tier of OGIÅ boiler, arrangement of burners on tiers in boilers of both types as well as diagram of gauging mode and polluting substances parameters are shown in the documents in Appendix 9

The total discharge of nitrogen oxides for years was (Appendices 4, 10)

1993 - 5717 tons,
1994 - 1990 tons*,
1995 - 3568 tons

* Note The decrease of emissions is connected to reduction of energy production by 46 4%

The emission control for nitrogen oxides on boilers No 3 and No 4 is conducted with the help of continuously working devices and on the other boilers by chemical method 3 times a week, jointly according to two components (SO_2 + NO_x) once a month

The concentration of nitrogen oxides in emissions in 1995 was as follows (Appendix 10)
for PÊ-47 boilers on gas 215 mg/nm^3 and on mazut 180 mg/nm^3,
for OGIÅ boilers on gas 290 mg/nm^3 and on mazut 350 mg/nm^3

To reduce nitrogen oxide formation at the station the following measures are taken a mode of stage burning of fuel, injection of mazuted water in furnace, providing secondary blast through splines above burners of the second tier These measures are reflected in the List of equipment and mode updating represented in Appendix 11 Only drawings and diagrams of advanced headpiece on

nozzle of the gas burner for all boilers, connections of secondary air box with the boiler screen, secondary blast air pipes for OGIÅ boiler are represented here

Implementation of these measures has allowed to lower the nitrogen oxide emissions on PÊ-47 boilers on gas from 358 to 215 mg/nm^3 (40%), on mazut from 225 to 180 mg/nm^3 (20%), on OGIÅ boiler on gas from 400 to 290 mg/nm^3 (27%), on mazut from 480 to 350 mg/nm^3 (26%)

Sulfur oxides

Discharge of this polluting substance is wholly determined by the sulfur content in fuel
According to years the total emissions was

1993 - 25,320 tons,
1994 - 6,803 tons,
1995 - 4,209 tons

The concentration of this polluting substance in flue gases is determined by calculation and once a month by a chemical method ("Evdiometr" device)
According to represented maximum single emissions for 1996 the concentration of sulfur oxides is 0 17 - 0 40 g/nm^3 (Appendix 10)* At the same time, according to data of the agreed upon specifications for limiting-allowable emissions till 1998, this limit in 1996 at sulfur content of mazut of 2 48% must be 2,380 mg/nm^3 for the basic boilers and 2,516 mg/nm^3 for starting boiler room
By 1998 this limit limiting-allowable emissions must be reduced by usage of mazut with sulfur content of 2% up to 1,960 mg/nm^3 and 2,090 mg/nm^3 for the same sources respectively (Appendix 12)

* Note These data concern to period when at the station mazut with sulfur content of about 0 5% was burnt being mixed with gas at ratio 70% / 30% Data on whether station can henceforth constantly use this mazut are not available

Vanadium oxides

The discharge of this polluting substance is wholly determined by the vanadium content in mazut and structure of fuel balance For instance, according to the report of the station for 1995 56 7 tons of vanadium pentoxide were emitted
Its quantity in emissions is so far determined only by calculation

3 1 2 Emission Limits

The current air protection law of the Republic of Kazakstan stipulates setting of the allowable emission specifications to restrict harmful influence of emissions of the industrial enterprises upon atmospheric air

At the moment for the industrial enterprises a setting of the specifications of so-called limiting-allowable emissions and temporarily agreed emissions of harmful substances is stipulated by law

The limiting-allowable emission (LAE) means "the technological specification determined on a condition that the content of polluting substances in a lower layer of air from a source or their set must not exceed the specifications of quality of air for the population, flora and fauna" (National Standards 17 2 1 04-77)

If for the working enterprise the values of limiting-allowable emissions (LAE) are exceeded then a staged reduction of emissions is used up to values of LAE At each stage before providing values of LAE the specifications of temporarily agreed harmful substance emissions (HSE) are set

Rules of a setting the allowable emissions (National Standards 17 2 3 02 -78) define limiting-allowable concentration (LAC) of harmful substances in atmospheric air confirmed by Ministry of Public Health Services of the Republic of Kazakstan as the basic specification of air quality

In general the rules require the ratio to be carried out

$$\tilde{N} / LAC \leq 1,$$

where C is calculated concentration of harmful substance in lower layer of atmosphere

As the lower concentration may be formed by a set of emission sources then while setting LAE for the given source the values of background concentration $\tilde{N}_0$ determined by calculation or experimentally are taken into account, therefore the abovementioned ratio is represented as follows

$$(\tilde{N} + \tilde{N}_0) / LAC \leq 1 \text{ , or } \tilde{N} + \tilde{N}_0 \leq LAC$$

When setting the LAE specifications the maximum lower layer concentration of substance from the given source $\tilde{N}_1$ and value of background concentration $\tilde{N}_0$ created by other sources of emissions are determined using mathematical model for scattering of gaseous and aerosol impurities in atmosphere

According to "ÎND-86 The technique of calculation of harmful substance concentrations in atmospheric air in emissions of the enterprises" maximum lower layer concentration referred to adverse meteorological conditions and for hot sources is determined by the formula

$$\tilde{N}_1 = AMFmn\eta / (H^2 \sqrt[3]{V_1 \Delta T}) \text{ , where}$$

I - height of chimney, m,
I - expenditure of substance discharged to air, grams/second,
ΔO - difference between temperatures of discharged gases and air,
V_1 - the complete discharge of flue gases from chimney, m^3/s,
F - factor for separation of hard particles (for gaseous substances F is 1),
A - climatic factor,
η - factor taking into account relief,
M, n - factors taking into account conditions of rise of the flue gas torch above chimney

By this formula and ratios allowing to determine $\tilde{N}_0$ a degree of conformity of emissions from the given source to represented above expression $C + \tilde{N}_0 \leq LAC$ can be determined
In case of discrepancy the expenditure of discharged substance I satisfying to this ratio is determined which will be limiting-allowable emission (LAE)

After setting the LAE specification the list of measures and terms of realization of measures which must be implemented at the enterprise is determined to reduce a level of emissions up to the LAE specification

3 1 3 Specifications of Djambul power station emissions

For conditions of Djambul power station operation the external organization "Êaztekhenergo" worked out a project for the limiting-allowable emission (LAE) specifications

In the project the specifications for sulfur dioxide, nitrogen dioxide, vanadium oxide and summation groups No 26 (sulfur dioxide + nitrogen dioxide), No 7 (sulfur dioxide + vanadium oxide) and No 10 (vanadium oxide + manganese oxide) are calculated In addition emissions from

unorganized sources are determined For base of calculation the year 1992 was taken Some infringements of sanitary norms for limiting-allowable concentrations were revealed and measures on achievement of limits by 1998 are planned
The project is agreed upon and approved by republican ecological bodies

According to these limits the station annually receives from Ministry of Ecology and Bioresources of the Republic of Kazakstan the permit for discharge of the amounts of particular polluting substances specified in the Project The copies of such permits for 1991-1996 are represented in Appendix 13 They determine the control specification for maximum-single discharge (grams per second) and a limit of total emissions (tons per year)
Both these parameters are represented for limiting-allowable emissions and for temporary-agreed emissions
The analysis of these documents for 1995-1996 and comparison of limits available in them with actual emissions (Appendix 10) are represented below

For sulfur and nitrogen oxides for 1995

The emission per second data are not represented by the station, therefore the comparison is given for total emissions only
Gas prevailed in the structure of fuel balance (70%)
The actual emissions of nitrogen oxides were 3,568 tons/year and sulfur oxides 4,209 tons/year (Appendix 10) The permitted emission reached, respectively, 9,999 tons/year and 37,721 tons/year Obviously that actual emissions are much less than permitted ones These parameters can be explained by an incomplete load of the equipment as well as by large content of gas in fuel At nominal load and design fuel according to data of the LAE Project this year nitrogen oxide discharge of 11,970 tons and sulfur oxide discharge of 46,690 tons were expected (Appendix 14) In this case the permitted level for both components would have been exceeded

The comparison of actual emissions of the station for 1995 with the requirements of World Bank (NO_x - 360 mg/nm^3, SO_2 - 100 tons/day) shows that
the concentration of nitrogen oxides on different boilers ranges from 180 to 350 mg/nm^3 (Appendix 11) and does not exceed the specified limit,
for sulfur oxide a discharge of 4,200 tons/year corresponds to 12 9 tons/day which is much less than the limit, but, on the other hand, at a complete load of the equipment the expected level of emission of 49 69 thousand tons/years (if working 365 days a year) corresponds to 136 tons/day i e by this component the limit is exceeded

For sulfur and nitrogen oxides for 1996

Data for actual total emissions are not presented by the station The actual values of emissions are represented for the first half-year at the following structure of fuel balance 30% of gas and 70% of mazut with the small sulfur content (0 5%)

Nitrogen oxides

Boiler No , type	Actual emissions, g/s	WB emission limits, g/s ('96)	LAE, g/s	Ñ, actual, mg/nm^3
No 1-3 PÊ-47	∑109 5	93 1	93 1	≤ 0 194
No 4-6 OGIÅ	∑148 8	175 7	175 7	≤ 0 265
DKVR	- (2 3)	2 3	2 3	-
Total	**260 6**	**271 1**	**271 1**	**≤ 0 265**

As seen from the table at the station as a whole the LAE specification is not exceeded, however, on the first stage boiler (PK-47) the emissions are a bit higher than the norm
For these boiler implementation of measures on then decrease of emissions is necessary
Sulfur oxides

Number and type of Boiler	Actual emissions, g/s	WB ('96), S=2 4%, g/s	LAE, S=2%, g/s
No 1-3 PÊ-47	∑102 4	1514 2	1261 8
No 4-6 OGIÅ	∑191 0	1850 6	1542 1
DKVR	- (22 9)	22 9	19 1
Total	**316 3**	**3387 7**	**2842 1**

In this table the actual data are also represented for unprojected fuel However, such mazut is not typical for operation of the equipment
In case of use of mazut with sulfur content of 2 4 % (plan), the final values will look as follows

Total	**1518 3**	**3387 7**	**2842 1**

As a whole, it is possible to state that actual emissions for 1996 do not exceed the WB limit specifications

As for the requirements of World Bank the picture is as follows

- the maximum actual concentration of nitrogen oxides is 265 mg/nm^3 which is less than limit of World Bank being 360 mg/nm^3,
- the expected level of sulfur oxide emissions at a complete load of the equipment and scheduled sulfur content of fuel would amount to 46,690 tons/year (Appendix 14) and if operating for 365 days a year it would be 127 9 tons/day which exceeds a limit of World Bank (100 tons/day) It should also be noted that at scheduled decrease of sulfur content in mazut up to 2% by 1998 the amount of emissions will reach 40,619 tons/year or 111 3 tons/day which is higher than the requirements of World Bank Actual emission in 1996 is much less as the station is loaded about 0 3 - 0 5 of rated power and uses fuel with small sulfur content

Thus, the actual emissions of nitrogen oxides in 1996 a little bit exceed the requirements of the LAE specification, but do not exceed limits of World Bank

As for sulfur oxides the republican requirements are not exceeded but the limit of World Bank is exceeded by about 35%

The station has no claims on the part of supervising bodies this year

The planned work is made at station to decrease the basic polluting substance emissions The Plan of measures for decrease of emissions of nitrogen and sulfur oxides (Appendix 12) is implemented, it stipulates reconstruction of the air supply to burners of the boiler No 5
To reduce sulfur dioxide emission the realization of the recommendations is stipulated to achieve the LAE under transition to burning of mazut with sulfur content of no more than 2%

At power station territory and beside station the supervising bodies regularly carry out the measurements of air quality (Appendix 15) Besides, there is the document of the same bodies

confirming that in total air pollution of city of Djambul the permitted emissions of the station in period from 1990 till 1995 have never been exceeded (Application 15)

3 2 Water Supply and Liquid Waste Effluents

3 2 1 Sources of Water Supply

The Djambul power station has two sources of intake water
The Talas river
Underground artesian wells

The mixed water from the mountain Talas river (regulated upstream by Kirov reservoir), Assa-Oalas canal and cooled water after water-cooling towers through a supply water-course, supply canal, building of rotating grids through two pressure head pipelines is put to technological needs of the station

The intaking unit on the river was constructed to intake water for needs of Djambul power station The water supply from the unit to the main building is performed by gravity at the expense of a difference of geodetic levels of top of water-race and level of installation of turbine condensers Thanks to regulating of the Talas river for irrigation needs the technical water supply is made by the mixed scheme during fall-winter and spring periods on turnaround water supply from water-cooling towers with mixing river water and during the summer period through forward flow scheme

Supply canal is of curvilinear form 350 m long At the end of the supply canal a head regulator and shield concrete dam are located The head regulator is a concrete structure made by two spans 5m long with throughput of 50 m^3/s The shield concrete dam is divided into five spans 5m long Throughput of the dam is 304 m^3/s

The supply open canal 470 m long wholly is covered by reinforced concrete plates Width of bottom is 6 m Speed of water stream is from 0 35 m/s to 1 21 m/s Throughput of the canal is 50 m^3/s

For detention of fine mechanical impurity at the end of the supply canal there is the building of rotating grids It is equipped with metal lattices, water treatment rotating grids, pumps of wash grids There is the pressure head pipeline of technical water supply from clearing grids for meeting technological needs of the station

The technical water is used to cool the turbine condensers, the generator gas-coolers, the turbine oil-coolers, the feeding pump oil- and air-coolers, the pump bearings and rotating mechanisms of boiler-turbine room (in chemical room) cooling as well as for other not taken into account discharges of the station
The diagram of technical water supply is represented in Appendix 16

Cooling water of a turnaround cycle takes place in four water-cooling towers The area of watering is 4,000 m^2

The water of a forward flow cycle is discharged through the open discharging canal into river Oalas

According to 2-TP-vodkoz account form water intake was

Year	Water intake, thousand m^3/year

1993	13487
1994	13127
1995	13445

The amount of turnaround water changed for years

Year	Amount of water thousand m^3/year
1993	659987
1994	338520
1995	709299

The peculiarities of the account water consumption at the station are such that in volume of turnaround water a volume of fresh water taken for cooling of turbine condensers is shown, which changed for years as follows

Year	Volume of water, thousand m^3/year
1993	479819
1994	311198
1995	488187

The underground water from the five artesian wells is used to meet sanitary needs of the station and Solnechny and Pionersky settlements, as well as under emergency or reserve circumstances for technological needs of the station The depth of the artesian wells changes from 50 m to 70 m The yield of the wells is 30 to 50 l/s

According to "TP-vodkhoz" account forms for 1993-1995 water was intaken (in thousand m^3/year) 1651, 1600, 1543 5 respectively, i e there is the small reduction (Appendix 17)

The control for the account of water consumption and water taking at the station is conducted using controlling devices, which are located upstream Oalas river and downstream waste water emissions in Oalas river

The artesian water meets the National Standard 2874-83 "Drinking Water"

3 2 2 Liquid Effluents

At operation of Djambul power station equipment the following kinds of waste waters are formed

1) normative-pure (from cooling turbine condensers),

2) sanitary waste waters,

3) industrial waste waters
   - water with oil and mazut,
   - condensate with mazut,
   - waste waters from boiler convection surface washing and regenerative air warmers,
   - acid and alkaline waste waters after regeneration of ion-exchanging filters

Djambul power station has two outlets of waste waters in a water object (Oalas river) sanitary waste waters after biological treatment and chlorination and normative-pure waters after cooling turbine condensers (Appendix 19)

The discharge of normative-pure waters is made into the open discharging canal

Waste waters after cooling basic technological and auxiliary equipment of turbine section are drained into return circulating water pipeline

From a machine hall along the main building there is the closed discharging canal with total length of 522 m

Then there is the division of water into two flows

1) to water-cooling towers through mixing pump station,
2) to Oalas river through siphon well

The closed supply canal to mixing water pump station (MWPS) is as though continuation of the discharging canal From MWPS the water is put to pressure head reservoir of the design charge of water of 30 m^3/s From pressure head reservoir the water lifted by mixing pumps is discharged through the open canal going along the supply canal to a head regulator along trailer emission canals to the front of water intake and to water-cooling towers The water cooled in water-cooling towers is drained into Assa-Oalas canal and is gone to front of water intake

From the main building to siphon well there is the closed canal The siphon well provides adjustment of water horizon at the end of the closed canal The siphon well is fitted with automatic water drainage and bottom apertures with boards After siphon well waste waters are discharged through the open canal 967 m long into Oalas river The complete design throughput of the canal is 45 m^3/s

The waste waters after cooling turbine condensers (94 4%), from generator gas-coolers (1 8%), from turbine oil-coolers (1 2%), from feeding pump oil- and air-coolers (2 1%) are put to return circulating water pipeline and then either to water-cooling towers or to Oalas river (depending on the circuit) These waters are considered to be normative-pure because as s result of such a use they are polluted only thermally

By the order of station in 1985 inspection of Djambul power station was performed by the specialized "Êazenergonaladka" industrial enterprise to reveal sources, amount and reasons of pollution of industrial waste waters [17] According to the recommendations of the experts at the station the measures were undertaken to reduce and eliminate discharges and leakages of polluting substances into the discharging canal and even into Oalas river

The waste waters containing oils as a result of leakage and going from turbine and feeding pump oil-coolers are put to a tank of dirty oil Sediment from the tank is put to casual drainage pit and the oil is gone to a tank of dirty oil Cooling waters from pumps bearings, possible leakages, drainages are put to the drainage pits and then are pumped out through pump station to oiled and mazuted waste water treatment plant as stipulated by the project

Discharge from sampling points of starting boiler room and filters, chemical room, and drainages, leakages from chemical room and the drainage waters from mazut facilities are put to the water drainage and then on treating into Oalas river

The waste waters from oil facilities are drained into the industrial storm water drainage of the station and then through industrial storm water pump station are put to the treatment plants to be purified and then to be used in the technical water supply system of the station

3 2 3 Effluent Treatment

To prevent pollution of Oalas river the industrial waste waters at Djambul power station a complex of treatment constructions is built (CIWT), which consists of the following plants (Appendix 18)

- oiled and mazuted water treatment plant with a capacity of 100 m^3/hour,
- mazuted condensate treatment plant with a capacity of 80 m^3/hour,
- waste water treatment plant which treats water from washing of boiler and regenerative air warmer convective shafts, with a capacity of 370 m^3/day,
- waste water neutralization plant which treats water from water chemical treatment station, with a capacity of 200 m^3/hour

Treated waste waters are expected to be used for needs of station

The treated industrial waste waters (except for neutralized waste waters) from regeneration of ion-exchange filters are put to non-filtering slime dumps included in a structure of hydraulic engineering structures

The neutralized waste waters are kept on the slime dump and settled water is drained together with normative-pure waters into Oalas river The volume of normative-pure waters discharge for period from 1993 till 1995 has decreased from 1,039 to 1,021 thousand m^3

The sanitary waste waters from the basic and auxiliary constructions as well as from Solnechny settlement in amount of 511 thousand m^3 annually are put to complete biological treatment constructions

The treatment structures includes

- pump station for pumping sanitary waters,
- two two-tier coupled primary settling tanks,
- four sections of biofilters,
- four secondary upright settling tanks,
- eight silt platforms,
- electrolyzer unit for reception of active chlorine,
- chlorination station for disinfection of treated waste waters

Capacity of the treatment constructions amounts to 1400 m^3 a day

As the constructions are not loaded the treatment efficiency is quite sufficient and there were no claims on the part of supervising bodies (Appendix 18)

During fall-winter and spring periods the technical water supply is made on turnaround water supply from water-cooling towers with mix of river water and in the summer period on forward flow circuit

The normative-pure waters are cooled in water-cooling towers

The station has four film water-cooling towers with the area of irrigation of 4000 m^2 each with hyperbolic ventilating towers 90 m high

According to the ecological legislation and by the order of the station limiting-allowable emissions (LAE) were developed in 1994 for two discharges into water object - Oalas river sanitary and normative-pure waters These norms were agreed with ecological supervising services and were approved
Their validity is till 1998

The conditions of waste water removal into water objects are determined taking into account the following

- degree of waste water mixture (dilution) with water of the water object at a distance from a place of waste water discharge to nearest control outlet unit of water usage,
- design background composition and properties of water from the water objects in places of waste water discharge

On the basis of calculations for each waste water discharge limiting-allowable emissions (LAE) polluting substances are established and their observance must provide normative quality of water in control outlet units of water objects according to the requirements of "Rules " or to preserve the natural values of composition and properties of the water

Limiting-allowable emission (LAE) is a weight of substance in waste water allowable to discharge with an established mode in the given place of water object in a unit of time to keep norms of quality of water and is

$$LAE = \tilde{N}_{ño} \quad Q_{ño}$$

Calculation of the LAE was made according to "Rules of surface water protection in the Republic of Êazakhstan" [13], "the Instruction on normalizing of polluting substance emissions in atmosphere and in water objects" [14], "Technique of calculation of polluting substance limiting-allowable emissions (LAE) in water objects of the Republic of Kazakstan" [16]

In a basis of calculations there is a requirement according to which each user of water when discharging waste waters must keep the following conditions for the nearest along the stream place of water usage (control outlet)

$$C^{i} \leq C^{i}, \; i = 1, \quad 1,$$

and besides that, at presence of substances of 1-st and 2-nd classes of danger with identical limiting attributes of harmfulness (LAH), LAE is determined according to the following (National Standards 4638-88 "Sanitary rules and norms", Ministry of Public Health of the USSR)

$$\sum \tilde{N} / C^{i} \leq 1, \quad \text{where}$$

C^{i} - limiting-allowable concentration (LAC),

1 - amount of normalized substances,

C^{i} - the concentration "i-th" substance in control outlet unit on condition of waste water discharge by user of water and summation in the second inequality is made for all substances with identical LAH which can be in water control outlet unit

Calculation of allowable for emission concentrations to streams (except for weighed substances) is made according to Frolov-Rodziller formula

$$\tilde{N}_{ño} \leq \gamma\, Q_{ð}\, (\tilde{N}_{iañ} - \tilde{N}_o) / q_{co} + \tilde{N}_{iae}\,, \qquad \text{where}$$

γ - mixture factor which shows what part of water in the river mixes up with the waste waters while it goes to control outlet unit located at the distance of L km,

Q - the charge of water in the river, m^3/s,

q_{co} - the charge of water in emission, m^3/s,

$\tilde{N}_{iae}$ - limiting-allowable concentration of a substance, mg/l,

$\tilde{N}_o$ - substance concentration in background outlet unit, mg/l

The concentration of weighed substances is calculated by the formula

$$\tilde{N}_{aça} = 0\ 25 \quad (1 + \gamma\, Q / q_{co}) + \tilde{N}_o$$

While determining the limiting-allowable emissions the maximum hourly charge of waste waters is accepted as the calculated charge of discharged waters for actual period of their emission depending on duration and mode of operation of the enterprise - waste water emission source

While determining dilution proportionality of the discharged waters by water of the stream in control outlet unit the following conditions in calculation are accepted

- For unregulated streams the calculated minimum monthly average charge of water for a year with keeping 95% of supply,
- For regulated streams the established guaranteed charge is lower than the dam

In Appendix 20 data on actual composition of sanitary and normative-pure water discharges as well as quality of water in receiver of water - Oalas river (before and after the emission) are represented

The actual parameters of sanitary and normative-pure waters (except for temperature) meet the approved republican LAE norms (Table 1) and the requirements of World Bank for quality of waste waters (ðI from 6 0 to 9 0, BOD_5 50 mg/l, a sum of heavy metal ions 10 mg/l, petroleum and oils 20 mg/l)

Table 1

The limiting-allowable concentration of polluting substances (mg/l) in waste waters of Djambul power station discharged into Oalas river

No	Polluting substance	The limiting-allowable concentration		Note
		Discharge No 1 (treated sanitary drains)	Discharge No 2 (conditional- pure drains)	
1	Weighed substances	117	106	
2	Mineralization	651	478	
3	Sulphates	200	74 9	
4	Fluoride	68	19 8	
5	Ammonium nitrogen	14 2	0 03	

6	Nitrite	3 8	0 009	
7	Nitrate	15 8	2 3	
8	Petroleum products	0 3	0 03	
9	Surface Active Substances	0 91	-	
10	BOD_5	15 0	2 25	
11	Magnesium	-	37 8	
12	Calcium	-	47 8	
13	Total phosphorus	-	0 026	
14	Total iron	-	0 09	
15	ðI	6 5-8 5		
16	Temperature	22°Ñ		

Notes

1 The approved charge of waste waters (treated sanitary drains) is 58 33 m^3/hour

2 The approved charge of waste waters (conditional-pure drains)

In the summer 14,0297 m^3/hour,

In the winter 2,178 m^3/hour

Table 2

Data on water temperature in Oalas river before and after normative-pure water discharge from Djambul power station

Month	Temperature before, °Ñ	Temperature after, °Ñ	Temperature difference, °Ñ
1996			
January	12 0	20 0	8 0
February	10 0	20 5	10 5
March	13 5	21 0	7 5
April	11 5	17 5	6 0
1995			
January	9 0	12 5	3 5
February	4 0	4 5	0 5
March	7 0	13 0	6 0
April	12 0	18 0	6 0
May	14 0	18 0	4 0
June	16 0	21 0	5 0
July	21 0	23 0	2 0
August	11 5	17 5	6 0
September	17 0	26 0	9 0
October	11 0	16 0	5 0
November	10 5	18 5	8 0
December	9 5	16 5	7 0

The analysis of the tables in Appendix 20 according to quality of normative-pure waters indicates that in the hottest months (July - September) the emission temperature changed from 20 to 26°C while Oalas river temperature before the emission was 11 5 to 21°C and after the emission from 17 5 to 26^0C

In 1995 50% of measurements of temperature in Oalas river after the emission comparatively with natural one (before emission) has an excess of temperature of 6-9°C and in 1996 from January till

April the excess of temperature ranged from 6 to 10 5°C Such a situation does not meet the requirements of "Rules of surface water protection "
According to these Rules the temperature of water of a fishery reservoir must not rise due to waste water emission more than 5°C with general increase of temperature not more than up to 28°C in summer and up to 8°C in winter comparatively with natural temperature of the water object

The quality of the waste waters does not meet temperature requirements of World Bank either because according to conditions of the latter it is required the temperature after a zone of mixture to be 5°C max above the temperature of received water and 3°C max higher if temperature of received water is higher than 26°C

By the order of the station Djambul branch "Êazecologia" [ ] made a calculation of allowable temperature of water in waste water during summer period taking into account the local hydrologic conditions of mixture of waste and river waters provided that the average long-term temperature of water in Oalas river the fishery reservoir is 20°C and the allowable excess of temperature after emission is no more than 5°C (Appendix 20)

The calculation has shown that limiting-allowable temperature in normative-pure water emission during summer period must not be higher than 26°C
It is offered to consider a temperature of 28°Ñ as the factor of risk and limiting-allowable temperature of water from a water object after normative-pure water emissions according to Appendix 3 ("Rules of protection ") and recommendations stated in a "Results of sciences and engineering" magazine

However, it is necessary to note that the explanatory note on water discharge No 2 is made by authors not quite correctly Particularly design temperature of 26°Ñ must be concerned with discharge of waste waters and temperature of 28°Ñ with water from the water object in mixture outlet unit while in the text of the note both temperatures correspond to water control outlet unit It distorts the meaning of calculation and normalizing of temperature of limiting-allowable emission which takes place in the documents on limiting-allowable emission No 2 and in the permit for usage of water For instance, in the table of limiting-allowable emission (Appendix 22) there are no temperature parameters though only they must be restricted while discharging normative-pure waters in a water object and in the permits given for 1994-1996 (Appendix 23) the temperature of the emission is faulty named equal to 28°Ñ
It would be expedient to take into account the noticed discrepancies while preparing the documents for 1997

3 3 Materials Handling and Storage

3 3 1 Storage of Chemicals

At the station there is a chemicals storehouse ensuring separate disposition of chemicals (Appendix 24)

- sulfuric acid in amount of 200 tons in five tanks with capacity of 400 m^3, $\gamma = 1\ 8\ kg/dm^3$,
- hydrochloric acid in amount of 100 tons in two tanks with capacity of 180 m^3, $\gamma = 1\ 8\ kg/dm^3$,
- NaCl of wet storing in cells, general stock is 600 tons,
- hydrazine-hydrate in amount of 3 tons in tanks of 17 7 m^3,

- 25% ammonia water solution in amount of 100 tons,
- dry lime Ña(ÎI)$_2$ in amount of 205 tons,
- Polyacrylamide in polyethylene bags in amount of 2 5 tons,
- Aluminum sulphate ($Al_2(SO_4)_3$) for settling of outgoing waters in amount of 40 tons

3 3 2 Storage of Mazut

All petroleum products received by the station are placed and stored on territory of a mazut storehouse which is equipped with (Appendix 25)

- Receipt-drainage station ensuring simultaneous reception of 60 railroad cisterns,
- two reinforced concrete reception tanks with a capacity of 600 m^3 each,
- eleven cylindrical metal mazut tanks (3×5,000m^3, 5×10,000m^3, 3×2,000m^3) providing conditions of storing at outdoor temperature of up to 80°Ñ The tanks are equipped with ventilation windows with a diameter ranging 200 to 400 mm A type of filling is flooded one A speed of filling reaches 400 m^3/hour For these purposes the pump station is used which includes
    - Four 2 ÎNA-22×3 loading pumps (Q=600 m^3/hour),
    - Five 8 ND-6×1 pumps of 1st rise (Q=175 m^3/hour),
    - Pumps of 2nd rise two of 5N-5O×4 type (Q=90 m^3/hour) and three of 8 ND-10×5 type (Q=240 m^3/hour)

The technological diagram of the pump station is represented in Appendix

At the station there are as well
- four drainage pumps (of 3Ê-VA, 2Ê-9D, 2Ê-6 types) ,
- 4ND-5×1 pump plant to pump mazuted water,
- PM-10-120 mazut heater with a capacity of 120 tons/hour,
- FM-10-120 mazut filters in amount 6 units including
  FM-10-120-40 filters (2 units) with a capacity of 120 tons/hour each and FM-10-240-40 filters (6 units) with a capacity of 240 tons/hour

The territory of the mazut storehouse is equipped with a security and emergency system and special means of fire-extinguishing

The reception-unloading platform and pumping units are equipped with devices and collectors for a casual and emergency leakage of mazut

Collection of surface waters is provided by a system of surface canals and water reception collector

3 4 Oil-Filled Electrical and Hydraulic Equipment

In oils of the electrical and hydraulic equipment the polychlorbyphenyls are present (PCB) However, tests for their presence at the station were not carried out in addition there are no instructions for the personnel to handle the oils containing PCBs There are no the measures for emergencies and for transition to usage of oils not containing PCB, either

3 5 Asbestos

Asbestos-containing insulation materials are applied at the station for the repair jobs in small amount (up to 500 kg a year)

The waste containing asbestos and other fibrous materials are collected and stored separately from common litter and with accumulation are put to utilization

There are no special program and instruction for use of materials containing asbestos as well as plans for their replacement by other materials

3 6 Waste Management

The formed at the station wastes are classified as building litter and firm sanitary waste

According to current regulating documents and permits given by the Oblast Department for Ecology the annual volumes and places of storage for the station are determined

Sediments from sanitary drain treatment are placed on specially equipped fields for silt storing which practically remain completely free

3 7 Contaminated Soil and Groundwater

Due to the accepted mode of operation of the station there are no industrial wastes required to be specially disposed or stored on relief of the area, the control for a condition of ground and ground water pollution is performed by urban sanitary-epidemiology and hydro-geological supervising services

4 0 SUMMARY OF ENVIRONMENTAL COMPLIANCE

The audition has shown that Djambul power station tries to carry out its operation according to the Natural Environment Protection in Êazakh SSR Law and other republican legislative acts

Since 1995 at the enterprise a ecology engineer position is established, there is a chemical laboratory which provides industrial ecological and analytic quality surveillance of waste and surface waters in a zone of influence of Djambul power station, which is performed together with Oblast Department for Ecology and Bioresources under the agreed schedule

The used methods and the techniques of the analysis meet the requirements of ecological services and State committee of standardization and the devices are passed through metrological certification Waste water sampling technique (usage of sampling by bathometers contributes to raise of the test reliability) and implementation of automatic continuous monitoring including analysis of the sample, analysis and forecast of quality of environmental objects as a result of emission influence require to be upgraded
The enterprise regularly reports according to the forms of the state statistical reporting and represents the accountability to Oblast Department for Ecology and Bioresources

According to article 21 of "Natural Environmental Protection Law", Djambul power station makes payments for using of natural resources within the established limits including payment for protection and reproduction of natural resources and payment for pollution of the environment

According to the accepted form of the account and accounting data represented in the Appendices 3, 17 the payment for emissions of polluting substances to environment and disposition of industrial waste amounted 2 6 million tenges in 1995 and for the first half-year of 1996 3 3 million tenges

There were no above-permitted standard payments, penalties and the payments for 1995 and first half-year of 1996

Current expenses for implementation of nature protection measures in 1995 were 9 7 million tenges including ones for protection and rational use of water resources 8 1 million tenges, for atmospheric air protection 0 6 million tenges, for protection of grounds from industrial and consumption waste pollution 1 0 million tenges

The expenses for overhaul of the basic production assets for environment protection reached 3 0 million tenges in 1995 including for reconstruction of waste water treatment constructions and installations and for rational use of water resources 2 9 million tenges

4 1 Air Emissions

The Djambul power station according the inventory made has three stationary organized environment polluting sources (two chimneys removing flue gases from six boilers and a chimney of starting boiler room removing gases from five boilers) Besides, there are twelve unorganized sources of mazut facilities, of various rooms and vehicles but their contribution to pollution of air and through it to ground is insignificant, nevertheless, there are also restrictions for emissions in the LAE project

The organized sources are the suppliers of industrial emissions to the environment sulfur, nitrogen and carbon oxides, nitrogen dioxides and other ingredients

At the station the measurements of components of combustion products are performed which are necessary for the control of burning process of fuel and emission of polluting substances in air For the first group of components the controllable values are shown on a control board of the boiler engineer (transparency of gases, oxygen content, temperature of gases, charge of fuel etc)

For polluting substances

The content of SO_2 is supervised periodically by a volumetric chemical method
The content of NO_X is determined on several boilers by automatic devices of continuous action, on the others by volumetric chemical method However, as a whole it is not enough for the objective reflection of the specified component emissions

Discharge of vanadium oxides is not supervised and is estimated by calculation

The station has the approved specifications of emissions and receives the permits from supervising bodies for emissions in due time

The analysis of materials shows that at present the discharge of basic polluting substances, SO_2 and NO_X, comparatively with the requirements of the LAE norms and World Bank's can be estimated rather ambiguously

- for 1995 - with usage of 70% of gas in fuel balance and at an incomplete load of the equipment there are no infringements for total emissions (requirements of WB), nevertheless, if the complete load and standard fuel mixture took place the excess would be expected for both components,

- for 1996 with usage of low-sulphuric mazut (0 5%) and 30% of gas in fuel balance during several months there were no infringements of the WB specification at a reduced load of the

equipment, the same picture would take place with usage of standard fuel and complete load, however, thus the LAE specification would be exceeded,

- the comparison of actual and scheduled emissions in 1995/96 with the requirements of World Bank indicates the absence of infringements for NO_X emissions and their presence for SO_2 emissions It should be noted that even at scheduled decrease of sulphuric content in used mazut by 1998 the level of emissions will be exceeded (by 11%) It should be also noted that this excess is insignificant because according to the republican requirements it does not result in exceeding the LAC on the area

4 2 Water Supply and Liquid Effluents

At present Djambul power station has two discharges of waste waters in Oalas river

1) treated (in complete biological treatment constructions) sanitary waste waters (discharge No 1),

2) normative-pure waste waters (discharge No 2)

The quality of waste waters and surface waters removed in water collector in a zone of emission influence, as mentioned above, is supervised by analytical services of both the station itself and of supervising bodies However, the condition of ecological and analytical control requires to be improved on a part of sampling techniques, samples storage using integrated methods of the toxic control and implementing automated continuous monitoring

The enterprise has carried out a number of measures allowing to reduce the antropogenic impact upon water object, Oalas river which is of fishery importance, namely there are no discharge of crude mazuted and oiled waters as well as waters containing the rests of petroleum products to the discharging canal, and consequently, and to Oalas river

The enterprise has the approved specifications for polluting substance emissions, validity of which is till 1998 and receives the permits for special usage of water in due time The limits for usage of water were not exceeded for the last years and moreover according to the reporting (2TP-air), the smaller amount of actually used water was noted

The actual quality of waste waters from both discharges on all parameters meets the approved norms for limiting-allowable emissions and meets the World Bank's waste water quality requirements, except for thermal pollution for discharge of normative-pure waters (No 2)

For this reason no measures for achievement of LAE at the station were not taken because the efficiency of sanitary waste water treatment at the complete biological treatment structures is sufficient owing to their novelty and underload, and the temperature factor did not draw the special attention in either the personnel of station or supervising bodies In addition the developers of LAE (a branch of "Êazecology) while calculating allowable temperature of the emission have admitted incorrect interpretation of the results, which led to normalizing of a temperature parameter of the emission at a level of 28°C which is faulty

The closer analysis of the temperature parameter conditions has revealed the discrepancy both to the requirements of republican "Rules of surface water protection" and the requirements of World Bank

Data for 1995-1996 show that the exceeding of temperature in water object after emission comparatively with the accepted one ranged from 6 to 10 5°C in 1996 and in 1995 in 50% of

measurements exceeding by 6-9°C took place whereas "Rules " and requirements of World Bank allow no more than 5°C exceeding

If an average long-term summer temperature of Oalas river equals 20°C (data of Kazhydromet), then the value of the normalized temperature of emission considering dilution must not be higher than 26°C Only in this case the necessary conditions for life of ichtyfauna will be kept After waste water emissions the temperature of 28°C of the water object must be considered in this case as the factor of risk

In connection with the abovementioned it is obvious that the station needs to reconsider the documents for LAE calculation to updating a temperature parameter and to enter the amendments into the permits for special usage of water as well to develop measures allowing to exclude the present exceeding of the temperature parameter

One of possible ways is an increase of an overall performance of water-cooling towers

4 3 Materials Handling and Storage

The necessary requirements are met as for chemicals and mazut storage ensuring ecological safety of the environment

Concerning the polychlorbyphenyls used in oil filling of the electrical and hydraulic equipment and asbestos, the enterprise does not conduct policy directed to their replacement for less toxic ones However, there were no claims on the part of ecological services and the cases of their significant negative influence upon the personnel and environment are not registered

As the fuel at Djambul power station is mazut or gas the industrial wastes are absent

Handling with litter and firm sanitary waste is performed according to the standard order and did not cause the claims on the part of ecological supervising bodies

For the same reason and because the station is not operated in a mode of the increased load there is no dangers concerning the pollution of ground and ground waters around station

From the Oblast Department for Ecology and Bioresources the requirement to the station was represented to adjust monitoring for benzpirene emissions as possible potential toxic polluting substance

5 0 CONCLUSION

The Djambul power station tries to keep its operation according to "Environment Protection Law" and other republican acts but, nevertheless, there are the problems connected to infringement of the nature protection legislation and requirements of World Bank

To obtain the objective information for air emissions it is not enough to fulfil gauging for SO_2, NO_X and vanadium oxides by existing methods (SO_2 periodically by volumetric chemical method, NO_X on several boilers by automatic devices of continuous action, and on the others by volumetric chemical method, vanadium oxides by calculation) Besides that, according to the "Instructions " and the "Rules " [7, 8] the implementation of direct measurements in chimney is required In addition, the Oblast Department for Ecology and Bioresources stated a wish to adjust monitoring for emissions of benzpirene

In spite of the fact that the station has the approved LAE norms and receives the permits for emission in due time, has the approved plan for achievement of the LAE, there are problems concerned with the emissions

- for nitrogen oxides

  actual emissions for different boilers ranges from 180 to 250 mg/nm^3, which does not exceed the requirements of World Bank for mazut stations (360 mg/nm^3), however, at a complete load of the equipment the expected total emission would be 11,970 tons/year at the specification of LAE 9,999 tons/year, the achievement of the specification is expected by use of more perfect technologies of stage burning for those boilers where it is necessary,

- for sulfur oxides

  the expected total emissions at a complete load of the equipment would reach 46,690 tons/year at the specification of LAE 37,721 tons/year and the maximum-single emission would be 3,387 g/s vs the specification of LAE 2,842 g/s, the requirements of World Bank (100 tons/day) are not reached even at scheduled decrease of sulphur content in mazut up to 2%, the achievement of the republican specification requirements is expected by use of the scheduled decrease of sulphur content of the used fuel, the requirements of World Bank can be achieved by decrease of sulphur content up to value less than 2%

To reflect more objectively the emissions structure of polluting substances in waste waters and the degrees of their influence upon the environment it is required to improve the sampling techniques, samples storage, to implement an integrated method of the control (method of biotesting) and continuous automatic monitoring at the station

The actual condition of normative-pure waters by the temperature parameter does not meet the requirements of "Rules of surface water protection" and World Bank's allowing temperature exceeding of water object after emission not more than 5°C comparatively with the accepted ones whereas according to the data for 1995-1996 exceeding 6 to 10 5°Ñ took place

The approved LAE norms for discharge of normative-pure waters (No 2) till 1998 must be reconsidered to correct the temperature parameter, and then the corrective amendments must be taken into account at reception of the permit for special usage of water To achieve the LAE for the temperature parameter it is necessary to develop the plan of measures

Concerning the PCBs used in oil filling of the electrical equipment and asbestos the enterprise does not conduct the policy directed to replace the substances with less toxic ones

6 0 RECOMMENDATIONS FOR MITIGATION REMEDIATION OF EMISSIONS

6 1 Air Pollution

To keep the requirements of the republican and world specifications for emissions of basic gas polluting substances it is expedient to take the following measures

- for nitrogen oxides - to develop and to implement more perfect and reliable technologies of burning with achievement of the specifications on those boilers where they are exceeded, as one of ways - to reconsider structure of fuel balance to increase a proportion of the gas burnt,

- for sulfur oxides - to implement burning of mazut with sulphur content of no higher than 2% or to increase a proportion of gas in structure of fuel balance,

- to adjust continuous measurements of SO_2 and NO_X by modern electronic devices By an example of "Lovett" coal station in the USA to purchase the stationary devices with all peripheral devices for periodic calibration, to process and register data, about 0 3 million dollars per one block are spent Possible usage of modern simplified system without peripheral of devices - portable electronic devices is available, for example LANCOM - 6500A They cost about 12 thousand dollars At usage of the new instrumental base there will be the necessity to agree the new periodicity and the reporting structure with supervising bodies

- for vanadium oxides - the instrumental measurement of emissions and estimation of necessity of their realization are necessary later on

In connection with the requirement of Djambul Oblast Department for Ecology about necessity of benzpirene emission normalizing it would be expedient at the following stage of work to carry out instrumental gauging with presentation of the recommendations about necessity or absence of necessity of benzpirene normalizing

6 2 Water Pollution

To represent more objectively the emission structure of polluting substances in waste waters and degree of their influence upon the environment at the station it is necessary

- to improve sampling technique, particularly, to implement bathometers which would eliminate distortion of the analysis results,

- to provide conditions for sampling storage for determined values of biological consumption of oxygen to get bags-refrigerators for the purpose,

- to implement a method of an integrated estimation of toxic condition of waste and surface waters It would allow to give an objective estimation of waste water and water object quality with the help of the obligatory method having the national standard importance (the Standard of the Republic of Kazakstan 17 1 4 01-95)

Besides that, using "Temporary methodical recommendations for an determination of damage to water objects by results of biotesting", approved by the Minister of Ecology and Bioresources in 1995, the enterprise could authentically estimate damage to the nature It would be useful while comparing expenses for natural protection measures with actual damage to the nature

As the actual condition of waste waters from discharge No 2 for the temperature parameter does not meet "Rules of surface water protection" and requirements of World Bank it is necessary to reconsider the LAE norms approved in 1994 to correct the temperature parameter as well to enter the amendments into the permit for special usage of water and to develop the plan of stage achievement of LAE for the temperature parameter One of the technical decisions can be a reconstruction of water-cooling towers

The station is required to develop the plan of measures to replace the toxic polychlorbyphenyls used in oil filling of the electrical and hydraulic equipment and asbestos used as a heat insulating material for the less toxic materials

APPENDICES

212

Appendix 2 - Site Plan Explanation Code

1 The main building

2 Chimneys

3 The electro-distributive device

4 Territory of the chemical room

5 Territory of the electro-distributive device

6 Building of construction management

7 Repair-mechanical room

8 Wood-processing room

9 Repair rooms

10 Chemicals storehouse

11 Tanks for chemicals

12 Pump station of third rise

13 Tanks with a capacity of 1,000 m^3

14 Working room of the mazut facilities

15 Rooms of the mazut facilities

16 The mazut-acceptance station

17 Treatment constructions including oiled and mazuted water treatment plant, tanks, neutralizers, condensate treatment station, washing water neutralization plant

Burns and Roe Enterprises, Inc

Technical Report

KAZAKSTAN REGIONAL ENVIRONMENTAL IMPROVEMENT STUDY

REGIONAL POWER PLANT SURVEY

EKIBASTUZ POWER STATION No 2

FINAL REPORT

December 1996

Prepared by	Local Kazakstan Specialists and Burns and Roe Enterprises, Inc
Submitted to Kazakstan	U S Agency for International Development and The Government of
Contract No	CAN-0002-Q-00-3154-00 Regional Environmental Improvement Study Delivery Order No 9, Task 4

214

REGIONAL SURVEY REPORT

Table Of Contents

Executive Summary

1 0 INTRODUCTION 1

1 1 Background 1
1 2 Facility Operations 1

2 3 THE FACILITY 2

2 4 Location 2
2 5 History and Environmental Setting 2
2 6 Facility Description 3
2 7 Environmental Management Structure 3

3 0 CHARACTERISTICS OF FACILITY EMISSIONS 4

3 1 Air Emissions 4
3 1 1 Emissions Sources 4
3 1 2 Emissions Limits 5

3 2 Water Supply and Liquid Waste Effluents 6
3 2 3 Sources of Water Supply 7
3 2 4 Liquid Effluents 9
3 2 5 Effluent Treatment 10

3 6 Materials Handling and Storage 15
3 3 7 Storage of Chemicals 16
3 3 8 Storage of Mazut 16
3 3 9 Storage of Fly Ash and Bottom Ash 17

3 10 Oil-Filled Electrical and Hydraulic Equipment 20
3 11 Asbestos 22
3 12 Waste Management 23
3 13 Contaminated Soil and Groundwater 25

4 0 SUMMARY OF ENVIRONMENTAL COMPLIANCE 26

4 1 Air Emissions 27
4 2 Water Supply and Liquid Effluents 28
4 3 Materials Handling and Storage 29
4 4 Contaminated Soil and Groundwater 30

5 0 CONCLUSION 32

6 0 RECOMMENDATIONS FOR MITIGATION & REMEDIATION OF EMISSIONS

6 1 Air Pollution 35

6 2 Water Pollution

APPENDICES

Appendix 1 General outline of industrial site of Ekibastuz Power station #2
Appendix 2 Site plan of Ekibastuz Power station #2 location area
Appendix 3 Description of boilers of Ekibastuz Power station #2
Appendix 4 Characteristics of fuel
Appendix 5 General view of burners of lower tier
Appendix 6 General view of burners of upper tier
Appendix 7 Tangential scheme of combustion on boiler of Ekibastuz Power station #2
Appendix 8 General view of principal dust coal burner of boiler of Ekibastuz Power station
Appendix 9 #2
Appendix 10 Flue gas treatment equipment
Appendix 11 Plan-schedule of control for keeping standards of emissions and limits
Appendix 12 Pipework information
Appendix 13 Permission for polluting substances emissions in air by stationary polluting sources
Appendix 14 Letter of Pavlodar oblast Department for Ecology and Bioresources #12/231 of
Appendix 15 19 04 1996
Record of test of system of flue gases treatment against fly ash
Appendix 16 Plan of measures for reduction of polluting substances emissions in air to achieve
Appendix 17 standards emissions at Ekibastuz Power station #2
Appendix 18 Scheme of waste waters treatment from oil products
Appendix 19 Scheme of industrial water supply at Ekibastuz Power station #2
Appendix 20 Act of presentation of Shandoksor lake for separated usage
Appendix 21 Information on industrial water supply system at Ekibastuz Power station #2
Appendix 22 Scheme of water balance at Ekibastuz Power station #2
Appendix 23 Explanatory note and account by form 2TP vodkhoz
Technological scheme of industrial water supply
Appendix 24 Analysis data on water of reservoir Ekibastuz Power station #2 and Ekibastuz
Appendix 25 Power station #2
Analysis data on mazut storage at Ekibastuz Power station #2
Scheme of sampling at sanitary waters treatment constructions

Executive Summary

(Later)

1 0 INTRODUCTION

1 1 Background

The Ekibastuz Power station #2 is located in northern Kazakstan, in Pavlodar oblast, near the town of Ekibastuz The facility mailing address is

738716, Pavlodarskaya oblast
Solnechny Power Plant Village
Ekibastuz GRES-2

The Director of the station is Anatoly Grigoryev and the Chief Engineer is Riza Duisenbinov

The following key plant staff were involved in the facility audit

Valery Gaiduk - Head of the Boiler Room
Gennady Kan - Head of the Hydraulic Department
Nina Zakirova - Head of the Industrial/Technical Department
Natalia Zakirova - Head of the Chemical Department
Nina Krukova - Head of the Laboratory

The audit team was comprised of the following members

Burns and Roe Company

- John Doyle - Principal Mechanical Engineer
- Gennady Doroshin - Leading Power Plant Specialist of the Kazakstan Scientific Research Institute of Power Engineering

Local Kazakstan Specialists

- Alexander Pescherov - Senior Specialist at Kazakstanenergo
- Ludmila Ljashenko - Head of the Ministry of Ecology and Bioresources Scientific Research Department for Ecology Problems
- Rafail Akhmetov - Chief of the Ecology Department at Kazakstanergo
- Mikhail Hojatelev - Leading Scientific Specialist at the Kazakstan Scientific Research Institute of Power Engineering
- Gennady Kropochev - Chief of the Testing Department at Ekibastuz Power Plant No 2
- Alexander Parucimov - Leading Specialist at the Almaty Ecology and Bioresources Department

This environmental audit was performed as part of a regional survey of power plants performed as part of a USAID funded "Regional Environmental Improvement Study" of environmental problems within the power sector of Kazakstan This study, along with the related audits, was directed by Burns and Roe Company in cooperation with Kazakstanenergo and the Ministry of Ecology and Bioresources of Kazakstan The audit was performed in accordance with the guidelines of the European Bank for Reconstruction and Development as presented in their document "Environmental and Health & Safety Standard Audit Report Format" The purpose of this audit was twofold The primary purpose of the audit, as part of the regional survey effort, was to characterize the current emission levels at the facilities investigated in order to develop recommendations for technology improvements which would

be applicable to the power sector of Kazakstan In this regard, the Ekibastuz facility was chosen for audit since its emission problems are considered to be representative of those of the power sector in general The second purpose of performing the audit was to serve as an opportunity for the team of local specialists to apply the classroom training received earlier in the Study regarding how to perform an environmental audit and how to western technologies could be applied to mitigate current emissions problems

The audit was performed for gaseous, liquid, and solid emissions It assessed the current discharges and the conditions which generate them, the methods of reporting emission levels, the technology currently in place to deal with these emissions, and plans to reduce emission levels Available documentation, such as research reports, facility records, conclusions of committees, etc were analyzed

Following the audit, the audit team's preliminary findings were discussed with the staff of the city of Pavlodar, Department of Ecology and Bioresources, (department head Mr Nikolai Khlystun, deputy Zhumabek Usenov) A discussion of the environmental impact of the Ekibastuz No 2 power plant was held with the facilitator of the project, Mr Alexei Solovyev, specialist of Kazakstan Ecological Expertise (KazEcoExp)

1 2 Facility Operations

Power station No 2 is still under construction and when completed will have a design capacity of 4000 Mwt At present there are two condensing power blocks with capacity of 500 Mwt each The Station operates in a base loaded regime Its design level of energy production is 24 775 billion KWt-hours annually at fuel consumption level of 17 million tons of coal annually Production of electricity in 1995 amounted to 5 16 billion KWt-hours, and coal consumption was 3 68 million tons The fuel burned at the Station is locally mined Ekibastuz bituminous coal with an ash content of over 40% The source of water supply to the plant is the Irtysh-Karaganda canal

The facility also has a startup/heating boiler plant This plant has hot water-heating and steam boilers with a total heating capacity of 200 Gcal/hour, and steam production capacity of 250 tons/hour It is the heat source for the Power Station and the Solnechny Construction camp This plant also provides steam for certain technological needs of the station 7,478 ha of land have been allocated for the Ekibastuz No power station Of this total, 44 5 ha must be developed as industrial buildings and construction Appendix 1 includes a site plan of the station the location of the main buildings

2 0 THE FACILITY

2 1 Location

The Ekibastuz Power Station No 2 is located within Pavlodarskaya oblast, in the Country of Kazakstan, 37 km away from the northern boundary of the town of Ekibastuz A site plan showing the location of the station is included as Appendix 2 The Irtysh-Karaganda canal goes from North-East to South-West Ekibastuz Power Station No 1 (with a capacity of 4,000 Mwt) is located 7 km from the canal Between Power Station No 1 and the town of Ekibastuz there is dacha housing along the shore of the Ekibastuz spare reservoir Power Station No 2 is 17 km north-east of Station No 1 The power plant village housing (Solnechny), for personnel associated with both stations, is 4 km north from Station No 2

2 2 History and Environmental Setting

Construction of Power Station No 2 began in 1985 under the direction of the Ministry of Power Engineering of the former Soviet Union The project was the next step in the planned development of powerful energy complex designed to take advantage of the huge deposits of Ekibastuz coal When finally completed, the ultimate design capacity of the station will be 4,000 Mwt, supplied by eight (8), 500 Mwt power blocks The first block was put into operation in 1990 and the second in 1992 The original owners of the facility were the State Energy Union, Ekibastuzenergo, of the Ministry of the Power Engineering and Coal Industry of the Republic of Kazakstan The most recent owner has been the National Energy Company, Kazakhstanenergo After the second block went into operation, further development of the station was postponed in 1995 due to absence of financing

The facility is located in a region with a harsh continental climate having severe winters (average monthly temperature in the coldest month, January, is 17-19^{0}C below zero, with the low temperature up to 45^{0}C below zero), and hot summers (average summer temperature being + 19 7^{0}C, and high temperature of + 40^{0}C) Dryness of the climate is evidenced in a low humidity The average annual absolute air humidity is 6 - 6,5 mb There are high winds throughout the year Significant environmental damage is caused by the winds in the summertime, when, with low humidity and high wind velocity (up to 4 2 m/s) there are dry wind dust storms All year long, at the power plant location, the winds are, for the most part, south-westerly (28%) and westerly (22%) In winter the winds are repeatedly from the south-west (40 - 45%) In spring and in fall there is re-organization of baric field In the summertime northerners begin to prevail On an average for a year the west wind velocity is 6 5 m/s, and the south-west is 5 9 m/s There are winds with velocity of 8 to 15 m/s about 170 days a year Throughout the year there are up to 13 days with dust storms, the most occurring in May, June and July

The region is located at the juncture of the West-Siberian platform and the Kazakh heights, and is within the boundaries of the Priirtyshskaya cavity and the Prikazakhstanskaya monocline, which have a two-tier structure (bottom and platform layers) The rocks of bottom layer are typified by magmatic and sedimentary-metamorphic rocks, extending to a considerable depth (over 500 m) and forming a hard, rocky, foundation The platform layer consists of Mesozoic complex and Trias-Jurassic sedimentary and effusive rocks along with beds of sandy and clayey sediments of upper and lower chalk period This layer extends to a depth of 100 - 200 m and greater The Mesozoic layer of rocks throughout the territory is embedded with waterproof sediments, 5 to 155 m deep, of middle and upper Paleogene, which are embedded with clays and sands of upper Paleogene, 5 to 40 m deep Neogene rocks are typified by sandy-clayey formations, 5 to 100 m deep Quaternary alluvial, deluvial, and proluvial formations (and their combinations), of different ages, are typified by sands, clays, sandy-gravel mixes, sabulous clays and plastic clays These formations are wide spread and their depth ranges from 2 to 35 m

Mesozoic and Paleogene rocks are covered by present lake sediments of the terraces surrounding the lake Lithologically, the lake sediments are represented by clays, sandy clays, oozes and sands at a depth of 0 to 5-10 m The present lake terraces are also developed Hypsometrically levels of the lakes are unequal, rising from north to south together with the overall rise in the surface level of the region

In the territory in question, the most significant geological processes at present are the physical weathering, plane drainage, erosion, swamping, and deflation The zone of fine grinding is

significantly affected by physical weathering, especially when in the presence of underground water, which leads to intensive loosening of clay deposits Plane drainage occurs throughout the territory of the region The surface, which is gently sloping and subject to erosion, contains small ravines and cavities, 0 2 to 0 3 m deep, frequently salinated, with rare, salt-tolerant plants Salination of the ground, in general, is within negative forms of ground forms and is related to the presence of underground water near the surface

Erosion processes are side and depth erosion, leading to the formation of ravines Swamping processes occur in the boundaries of lake cavities and closed holes on the periphery of large reservoirs (Power stations No 1 and No 2) Weathering has developed on areas involving arable lands, in locations where there is little or no grass on the slopes and the tops of small mountains, where there adjoining soil is of poor quality Along the boundaries of the power station site, the maximum depth of surface ground deflation is 3-5 cm within the formation of the soil layer
According to the conditions of seating, reaching and movement of underground waters in the area, several types of water-bearing layers, zones and waterproof formations can be found Water-bearing layers, in general, are represented by low-penetration, locally water-bearing, layers (9 types), water-bearing zones, and waterproof sediments (2 types) Underground waters are fed by infiltration from surface waters and by underground drainage from higher elevations (i e - there is hydraulic gradient with the waters of lower rocks) The water is fresh or slightly saline and the microelement contained are bromine, fluorine, iodine, copper, zinc, and beryllium Due to the limited quantities of these waters, they are of no practical use

The underground waters of water-bearing zones are wide spread By composition, these waters contain chlorides, sulfates and natrium (magnesium), ranging from slightly salty to brine, and having a mineral content from 1 3 to 63 7 gr/l Debit ranges are from 0 1 to 15 0 liters/second Absolute levels, on an average, range from 169 to 283 These waters are of no practical importance

Surface water resources in areas near Power Station No 2 are the Irtysh-Karaganda canal, the Ekibastuzskoye spare reservoir, the Zhengeldy and Shandyksor reservoirs (formerly lakes), and the very salty Karasor lake, which at present is used for wet ash disposal from Ekibastuz Power Stations No 1 and No 2 Watercourses in the area are the Altynai-Zhyrasu, Zhengeldy, and Karasu creeks along with isolated cavities containing water from spring floods The Altynai-Zhyrasu creek is in the northern part of the region It starts near station No 1, flows 10 - 15 km east, and is lost before reaching the west shore of Karasor lake The Zhengeldy river starts from the Ekibastuzskoye reservoir dam and is fed by infiltration losses from the Ekibastuzskoye reservoir Water consumption near the dam is 63 liters/second, the width of the flow is 0 6 m The direction of the river flow is from south-west to north-east until it joins the cooling reservoir for station No 1 (Zhengeldy)

The Irtysh-Karaganda canal was put into operation in 1966 Its length is 458 km from the Belaya river (a watercourse of the Irtysh river) to Karaganda The canal is used as industrial and drinking water supply for many big industrial centers of Central and North Kazakstan Shandyksor reservoir (Shandyksor lake) is located in the northern part of the region on the south-west area of the Solnechny power plant village and collects discharge water from station No 2

The characteristics of the reservoir are as follows

- length = 7 km
- width = 5 8 km
- depth = 11 m
- volume water (as of Sep 1991) = 236 9 million m^3 at absolute level of 131 95 m

The reservoir is filled from the Zhengeldy reservoir and the Shidertinsky canal The former is now preserved and water comes from the Shidertinsky canal at a rate of 1 to 3 million m^3 per day Mineral content of the water in the canal is 0 2 g/l

The original design concept was that after the Shandyksor reservoir was filled water would no longer be taken from the Irtysh-Karaganda canal to feed the reservoir because station No 2 would be implementing use of a closed circuit water supply, however this did not happen

Karasor lake is 25 km east from station No 1 and 25 km from station No 2 After being filled with ash waste it had become an inland heavily salty lake 0 5 - 1 0 m deep

2 3 Facility Description

The station is comprised of two 500 Mwt power blocks Each block contains a supercritical steam turbine (model K-500-240-2), manufactured at the Leningradsky Metal Plant, a generator (model TVV-500-2EU3) and once through coal fired boiler (model Pp-1650-2-255 ,P-57R), manufactured at the Podolsky boiler plant Boiler and fuel characteristic information are included as Appendices 3 and 4 respectively Boiler operating conditions are as shown in Table 1

Table 1

BOILER OPERATING CONDITIONS

Parameter	Measurement units	Design value	Operation value	
			Boiler 1	Boiler 2
Steam consumption	tons / hour	1650	1282	1239
Steam pressure	atmospheres	255		
Steam temperature	^0C	545		
Overheated steam consumption	tons / hour	1364		
Overheated steam pressure	atmospheres	40		
Overheated steam temperature	^0C	545		
Feeding water temperature	^0C	271		

Input air temperature in air heater	^0C	50		
Flue gas temperature after air heater	^0C	150		
Boiler efficiency	%	91 7	85	82

The boilers are of the "T" configuration with a double cell, balanced draft furnace, with dry bottom disposal The boilers are designed to fire medium volatile bituminous coal from the Ekibastuz open cast mine Mazut is used as the auxiliary fuel for start-up The furnace walls are water cooled and the boilers are top suspended The boilers have different, direct-fired, pulverized coal burner systems

Boiler #1 is opposed-wall, horizontally fired, with 24 swirl type, single register burners (2 horizontal rows of 6 burners on each wall) each with a separate secondary air duct (i e - no common windbox) The heat input per burner is $45x10^6$ kcal/h There are no overfire air (OFA) nozzles installed Boiler #1 burner arrangement drawings are included as Appendices 5 and 6

Boiler #2 has a tangentially fired, low-NOx, pulverized coal firing and bulk furnace air staging (OFA) system with 24, primary air/pulverized coal, fixed nozzles (3 horizontal rows of 4 burners on each wall) with one firing circle in each of the two furnace cells Each coal nozzle is equipped with a separate secondary air duct (i e - no common windbox) The heat input per main coal nozzle is $45x10^6$ kcal/h The secondary air nozzle of each main coal nozzle is arranged so that it contributes to the formation of a large diameter, concentric combustion airflow "circle" in the vicinity of the furnace tubewalls, creating a local oxidizing atmosphere for the prevention of localized slag-type wall deposits and tube metal corrosion attack A control damper is provided in the secondary air flow to each burner This damper was designed to allow a portion of the secondary air flow to be diverted and used to form the large diameter concentric airflow "circle" The majority of the secondary airflow, combining with the primary air/pulverized coal mixture, contributes to the generation of a smaller diameter "firing circle" Due to deterioration of these control dampers, a decision was made to discontinue use of the diverted secondary air flow stream At the time of testing these ports had been bricked over Boiler #2 burner arrangement drawings are included as Appendices 7 and 8

The draft system of each boiler consists of two forced draft (FD) and two induced (ID) axial flow, electric drive, fans Each boiler is supplied with raw coal from six silos, each with a screw, volumetric-type, raw coal feeder The feeders discharge to six per boiler, MPS-2650, vertical spindle, medium speed pulverizers Each pulverizer has an integral centrifugal classifier and electric motor drive Coal throughput at design rating is approximately 58 te/h, with five pulverizers in operation Each pulverizer supplies pulverized coal to four burners through PA/PC conduits The pulverizers are pressurized Primary air (PA) is supplied by two per boiler, radial flow, electric drive, fans The PA fans take suction from the discharge of the FD fans

Particulate emission control for each boiler consists of four Venturi Scrubbers (Model MMK 4x2/7) followed by two Electrostatic Precipitators (ESP's) positioned upstream of the two ID fans per boiler There is no fluegas desulfurization (FGD) equipment installed The design ash collection efficiency was 99 5% The wet stage of the ash collection system was intended for partial collection of ash (about 92%) and improvement of the flyash properties for improved EPS performance During initial testing of the ash collection systems, (following

commissioning), the ash collection efficiency was determined to be 98 77% on block #1 and 99% on block #2 However, since commissioning the efficiency of the ash collection systems have deteriorated significantly due to ESP corrosion, excessive Venturi wear, and Scrubber blockage A description of the ash collection equipment is included as Appendix 9

2 4 Environmental Management Structure

Overall management of environmental management structure Ekibastuz Power Station No 2 is the responsibility of the Chief Engineer The main task of Chief Engineer, in this regard, is to ensure that the requirements of environmental protection legislation, along with applicable standards and regulations implemented during operation of the station equipment He is responsible for distribution of regulations among all departments heads, and for review and approval of all environmental protection plans, and responding to directive from supervising bodies All departments involved with the generation of air, water, and solid waste emissions (namely the boiler, fuel-handling, chemical and hydrotechnical departments) report directly to the Chief engineer

The primary task of the boiler department management is to be aware of and to attempt to adhere to air emission standards during operation of the boilers and ash collection equipment
The functions of department personnel are defined by the rules for technical operation of equipment and by official instructions Providing periodic measurements of the concentrations of nitrogen oxides, sulfur dioxides, carbon monoxide in flue gases streams is performed by the testing department For this reason specialized sub-departments also exist to perform repair and testing of boilers and ash collection equipment

The functions of the fuel-handling department include responsibility for the operation of aspiration plants during unloading, transportation, and crushing the coal fuel The responsibility of chemical department is the neutralization of acid and alkaline waste waters from water conditioning units and the control of the chemical composition of water in cooling water intake reservoir
The hydrotechnical department's responsibilities include operation of ash disposal systems, the cooling reservoir, and the biological waste treatment system from Power Station No 2 and the Solnechny power plant village

The Heating-Power Equipment adjustment and Testing Room (HPEATR), the Industrial-Technical Department (ITD), and the Planning Economic Department (PED) report to the Chief Engineer HPEATR is engaged in coordination of activities of the various departments of the station involved with environmental protection It is responsible for control of polluting air emissions, timely arrangement of design standards on emissions, and arriving at agreements on emissions with the Ministry of Ecology and Bioresources of Kazakstan along with obtaining required permits for withdrawing fresh water, for ash-cinder waste storage It also prepares all the necessary reports required by supervising bodies The Industrial-Technical and Planning Economic Departments provide HPEATR with technical-economic information related to the operation of station equipment

The facility environmental management structure is represented as follows

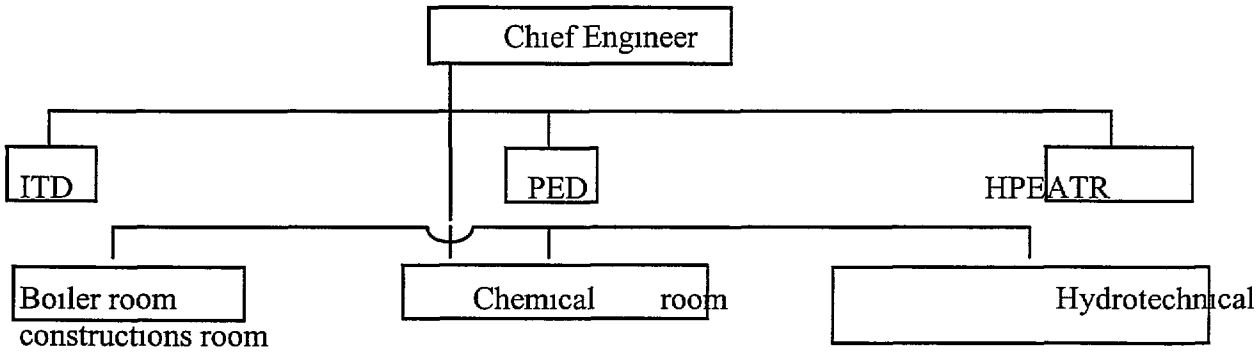

Control for air emissions at the facility is made in accordance with the industry sector rules, as agreed to with the Ministry of Ecology and Bioresources of Kazakstan, by defining a mass emission rate for each pollutant source and comparing the results with the approved standards The rules require implementation of accounting control for polluting flue gas emissions from chimneys at the station, and the affect on total emissions at the station Sources of low emissions, ventilation system emissions, as well as movable source emissions are not taken into consideration due to their insignificant contribution to pollution beyond the facility site

Control of the emission of harmful substances is carried out by the station itself along with other organizations The schedule for achieving the design emission limits and the values of the temporarily agreed upon "interim" emission limits, along with the names of the tested substances, test methodologies, the frequency of measurement, and the sampling locations, are included as Appendix 10

Emission monitoring is carried out once a month The monitoring consists of measuring of maximum monthly emissions rates (grams per second) and total monthly mass emissions (tons)
Maximum and total emissions of nitrogen oxides (NOx) and sulfur oxides (SO_2) are calculated using results of instrument measurements of these substances in the flue gases Sampling of flue gases is downstream of the I D fan The measurements are carried out at maximum, or near maximum, boiler load

As noted in the general industry sector standards document, OND-90, " existing power station and heating plant chimneys are not equipped with means of analytical sampling, but practically all flue gas ducts from the outlet of boilers are equipped with measurement locations Actual values of emissions from the chimneys are calculated by summing up emissions, measured at each boiler" Measurement of emissions is carried out on single boilers, connected to a chimney and on the power station as a whole, for which the emission standard is determined

Calculation of total emissions per month is made by measuring the following values

- Fuel Consumption - according to calculations by the industrial-technical department
- Ash Content, Sulfur Content, Heat of Combustion of fuel (average monthly) - according to data from the Chemical laboratory (or according to certificates for the fuel)
- Average Monthly Operational Load of boilers and other boiler operating parameters - according to accountability of type 3-tekh (energo)

Calculation of maximum emissions during a month is performed using the following values

- Maximum Daily Consumption of Fuel, of lowest grade, by a group of boilers connected to a chimney
- Other Values - As used above when calculating total emissions, but averaged per minimum period, including days when maximum consumption of fuel took place

To keep an account all the air emissions the station keeps log-books using an approved form

3 0 CHARACTERISTICS OF FACILITY EMISSIONS

3 1 Air emissions

3 1 1 Emissions sources

At the Ekibastuz Power Station No 2 there are nearly 30 sources of air pollution consisting of chimneys, vents of fuel supply aspiration systems, coal storage area, mazut storage, and others The largest quantity of pollutants (99 9%) goes to the air through two chimneys, ST #1 and #2, which are 420 and 100 m high, respectively Chimney #1 receives flue gases discharged from the boilers of blocks #1 and #2 Chimney #2 receives flue gases from the boilers in the start-up heating boiler plant Information on the chimneys is included as Appendix 11 Flue gases discharged through these chimneys contain nitrogen oxides, sulfur oxides, carbon monoxide, and particulates (ash, vanadium pentoxide) resulting from the combustion of Ekibastuz coal and mazut

3 1 2 Emission Limits

To reduce the harmful affects of the emissions from industrial facilities the Law of Air Protection of Kazakstan sets standards for acceptable emission levels At present, for industrial facilities, the standards are referred to as "Limited Acceptable Emissions" (LAE) and are an interim agreement on emissions of harmful substances LAE refers to the "scientific standard, determined under conditions where the content of polluting substances, in the lower layers of the atmosphere, from the source or a group of sources, does not exceed air standards for population, flora and fauna" (GOST 17 2 1 04-77) If an enterprise exceeds the LAE level, staged reduction of the emissions up to LAE values will apply In each stage, until LAE values are obtained, standards for interim emissions of harmful substances have been determined The Rules for determining acceptable emissions limits (GOST 17 2 3 02-78) establish a concentration limit (CL) for the ~~harmful substance~~ in air This limit is approved by the Ministry of Public Health of Kazakstan, as the primary standard ~~for~~ air quality

achieved

achieve the

In general, the rules require the following ratio to be in effect

$$C / LC < 1$$

where C is the calculated concentration of the harmful substance in the lower layer of the atmosphere

Since concentrations in the lower layer can be affected by many emission sources while setting the LAE for the present source, the background concentration, C_b, (found by calculation or by experiment) must be taken into account Therefore, the above ratio becomes

$$(C + C_b) / LC < 1 \text{ or } (C + C_b) < LC$$

While setting the standards for LAE, the maximum concentration of a pollutant in the lower layer resulting from the present source, C_M and the background concentration value, C_b, (resulting from other emission sources) are determined by using a mathematical air dispersion model In accordance with "Method for Calculating the concentration of harmful substances in air from facility emissions" "OND-86") the maximum concentration in the lower layer of atmosphere (related to poor meteorological conditions and for hot sources) is found by the formula

$$C_m = AMFmn\eta / [H^2 \cdot \sqrt[3]{V_1 \cdot T}]$$

where

H - height of chimney, m
M - mass discharge rate , grams/second
T - difference between gas and air temperatures
V_1 - total quantity of flue gases from chimney, m^3/s
F - factor for separation of particlulates (for gaseous substances F is 1)
A - climate factor
η - factor for ground forms (landscape)
m, n - factors for conditions of lift of the flue gases flow above chimney

Use of this formula, as well as ratios, allows the determination of C_b, from which it is possible to determine the correlation of emissions from a source to the ratio $C + C_b < LC$
In case of absence of such a correlation, the quantity of the substance discharged, M, is determined which satisfies the ratio and being the LAE, is found After setting the LAE limit, a list of measures to be implemented at the facility, and their conditions, are arrived at in order to reduce the level of the emissions to that of the LAE limits Since the beginning of construction and the start of operation of Power Station No 2, there have been serious violations of the environmental protection legislation The station was constructed without a positive conclusion by State ecological experts This was due to the unacceptable designs used for the Ash Collection Systems and the techniques for NO_x reduction Financing for construction of the facility was frequently interrupted by resolutions issued by the Ministry of Ecology and Bioresources As a result of the uncertainty associated with the development of the facility, along with the absence of official emission standards, the Ministry of Ecology and Bioresources set standards for emissions based upon operating two power blocks during 1995 / 96 These standards would have to be revised when future power blocks were commissioned However, the station did not obtain permit to discharge polluting emissions as of July, 2, 1996 (Appendix 12) despite the interim emission limits which were agreed to and approved on June

19, 1996 This situation constituted a violation of the Environmental Protection Laws of Kazakstan As a result, the Pavlodar Department of Ecology and Bioresources imposed a fine upon the station of 33 4 million tenge for the second half of 1995 (see Appendix 13)

The current emission limits currently in use for the facility are presented in Table 2 It was shown by the dispersion analysis performed when establishing standards for limited acceptable emissions (LAE) that the facility emissions exceed the limits Therefore measures were agreed to for reducing NO_x and particulate emissions which were to be implemented in 1999 The air emissions limits which the station will operate under during the period from 1996 - 1999 are referred to Interim or Temporary Agreed Emissions (TAE) Unfortunately during this audit of the facility it was not possible to obtain the data on discharge of flue gas concentrations of SO_2 and NO_x from station personnel Therefore, it was only possible to estimate compliance with the TAE in 1996 indirectly by performing calculations based upon maximum single emissions (g/s) This data are represented in Table 2

Table 2

Air Emission Limits and Actual Emissions, Ekibastuz No 2 - 1996

EMISSION TYPE	NO_x	SO_2	PARTICULATE	V_2O_5
Emission limits (1996)				
Emission per second, g/s	865	2324 7	1024 2	0 94
Concentration, mg/nm^3				
Block #1	856	2100	956	-
Annual emission, tons per year	17989	46541 2	20826 7	4 72
Other limits				
Actual (official) emissions				
Concentration, mg/nm^3				
Block #1	800-1200	1200-2500	499	
Block #2	500-900	1200-2500	-	
Annual emission, tons per year				
1993	17423 472	26207 432	6013 387	
1994	12145 74	38850 489	21102 48	
1995	15254 962	46720 299	37676 373	
Other relevant information				

As can be seen from the Table 2, the actual NO_x emission rates on blocks No 1&2 of 500-1200 mg/nm3 exceed the calculated TAE limits of 856 mg/ nm3 The actual SO_2 emissions rates are significantly below the TAE limits A comparison of the actual emission rates with those of the World Bank (NOx = 731 mg/nm3, SO2 = 100 tpd, Particulate = 50 mg/nm3) indicates that all limits are exceeded The actual particulate concentration shown in Table 2 (499 mg/nm^3) corresponds to an ash collection efficiency of 99 4% However, this value is unrealistic since the ash collection efficiency was indicated to be 82 4% on block No 1 equipment in the previous testing report (Appendix 14) and due to the physical condition of EPSs which was

observed Ash emission amounts 8,000 g/s were indicated during this testing, which significantly exceeds the 1996 limit

Management of the facility very well aware of seriousness of these emission levels and the fact that they exceed current limits As a result of this situation, a plan was developed which includes several steps for reducing emission levels (see Appendix 15) These steps consist of finishing the implementation of Low NOx burners on boiler No 1 and the modification of the existing staged combustion system on boiler No 2 by 1988 This step is expected to NOx levels to 550 mg/nm^3 The second step in this plan is to reduce particulate emission levels through repair and restoration of the wet scrubber and ESP's with a target ash collection efficiency of 99 5%

3 2 Water Supply and Liquid Waste Effluents

3 2 1 Sources for water supply

Surface waters in the territory of Ekibastuz Power Stations No 1 and No 2 consist of the Irtysh-Karaganda canal, the Ekibastuzskoye spare drinking reservoir, the Zhengeldy and Shandyksor reservoirs, and the very salty Karasor lake, which currently serves as the destination for ash disposal from both facilities (refer to site plan in Appendix 2) There is no fixed river network in the territory There are short-timed streams The Zhengeldy river has as its source the Ekibastuzskoye reservoir dam and has a flow of 63 m/s which joins the Zhengeldy reservoir The Irtysh-Karaganda canal is 458 km long, 30 - 50 m wide, having a depth of 4 - 4 5 m (static suction lift of 416 m) Mineralization of the water is 0 25 g/l The flow capacity of the canal is 2 km^3 per year Water from the canal is fresh and is used for drinking and industrial water service

In addition to the Irtysh-Karaganda canal, other water supply sources are the Ekibastuzskoye, Zhengeldy, and Shandyksor reservoirs as well as the Shidertinsky canal The Ekibastuzskoye spare drinking reservoir, located north of the town of Ekibastuz, has the following size

- Length of 19 km
- Width of 2 km
- Average depth of 4 m
- Total area of 7 2 km^2

The volume of water in the reservoir is 22 million m^3 Water is fresh with a mineralization of 0 18 g/l The shore slant is 3-5^0

The Zhengeldy reservoir, located near station No ,1 has the following size

- Length of 4 5 km
- Width of 4 km
- Average depth of 5-10 m
- Total area of 18 9 km^2

The cavity of the reservoir has a slope of 2-8^0 The volume of water at the 158 5 m level is 64 6 million m^3 The reservoir is fed directly from the Irtysh-Karaganda canal

The Shandyksor reservoir, located in north area near the Solnechny power plant village at station No 2, has the following size

- Length of 7 km

- Width of 5 8 km
- Average depth of 11 m
- Total area of 40 82 km^2

The volume of water at the 131 95 m level is 236 9 million m^3 The cavity of the reservoir has a slightly steep slopes of 2-5^0 This reservoir is a water accumulator for station No 2 Filling of the reservoir is temporarily from the Shidertinsky canal The annual water intake is 65 million m^3 Water mineralization in the canal is 0 2 g/l At present there is underway a plan to implement a system for treating and reusing the ash disposal water usage in order to decrease the water consumption from the reservoir

3 2 2 Liquid Effluents

The main categories of waste water from the station are

- Sanitary waste
- Ash Sluicing Water
- Storm water
- Oily Water
- Water Treatment System Wastewater
- Drinking Water Treatment System Wastewater
- Industrial Water Supply System Wastewater

3 2 3 Effluent Treatment

Sanitary waste from the station is treated mechanically and biologically followed by chlorination Waste is collected from the main and auxiliary buildings at the station along with that of the Solnechny power plant village After treatment the waste is discharged as pulp to join the ash sluicing water Solid remnants from oozy fields are used as fertilizers The design capacity of the sanitary waste treatment plant is 10,000 m^3 per day with an actual current throughput of 4,000 m^3 per day due to the partial development state of the station and village

Periodic manual sampling of for a number of parameters is made of the sanitary waste water treatment effluent The two parameters of concern by Kazakstan standards for sanitary wastewater are as follows

Parameters	*Limit value*	*Actual value*
Suspended particles, mg/l	15	14 8
pH	6 5 - 8 5	7

Water is also monitored for color, transparency, chemical consumption of oxygen, nitrates, nitrites, ammonium nitrogen, phosphates, dry remnant, doze of ooze, ooze index and BOD_5 World Bank limits of concern are the following

- Oil content - 20 mg/l,
- Heavy metal ions - total 10 mg/l,
- pH value within 6 - 9
- Chlorides* - 0 5 mg/l

*Chlorides and heavy metal ion content in water are not regulated and are not measured at the facility

Thus the content of the sanitary waste treatment plant effluent generally complies with the international and Kazakstan requirements except for oily water sedimentation tank water as noted below

Possible sources of oil contamination of storm water are

- Glands of mazut pumps
- Flange joints of pipework and armature
- Mazut heaters
- Mazut storage tanks and discharge tanks
- Refining condensate filters of mazut room
- Spillage in Mazut storehouse and other mazut handling areas

Possible sources oil contamination of waste waters are

- In the main building oil systems of turbines, of generators, of feed pumps, of mills, of fans, of oil refining plants, and pump glands
- In auxiliary buildings pump glands
- Areas around transformers, oil switches, emergency oil discharge, drainage of canals and tunnels with oil-filled cables
- In oil economy oil tanks and pump glands,
- Garages and vehicle parking areas

Due to these potential sources of oil in waste water streams condenser cooling water and cooling water reservoir may also be contaminated

Appendix 16 shows the waste waters and storm waters treatment schemes Storm water from equipment and repairing areas, air pumps for airlifts, compressed air storage and from the main building are collected in a storm water collector Design water consumption is about 250 m^3 per day Actual discharge flow is about 120 m^3 per day

Oil traps discharges, along with storm water, discharge into an independent collecting reservoir near the sanitary waste treatment plant from where it is discharged into ash sluice water transport line Treatment of oily-water is in an oil trap with a design capacity of 45 L/s (eight block operation) Receiving tanks with a holding capacity of 2 x 200 m^3 and 25 m^3 collect oily waters from non-emergency flows

Republic legislation (Sanitary Rules and Standards #4630-88) determines oil content in waste waters, discharged into natural waters, at level of 3 mg/l However, while discharging in ash disposal it is advisable to be guided with World Bank's requirements, which determine this value at 20 mg/l At the same time, there is no measurement of oil content in the collecting reservoir Overall control is made on pH only Chemical analysis of water in the collecting reservoir is not performed The 20,000 m3 collecting reservoir is made without provision for prevent water from entering and there is an infiltration of groundwater in before reaching the ash disposal It should be noted that there is no control of the chemical composition of water in the collecting reservoir, no control for oil content, and thus it is impossible to compare the quality of this water with legislative requirements

Sluicing Water for wet transport of ash and cinders in the ash wet transport system is pumped to provide spray water to the Venturis and scrubbers Transport of ash from beneath the scrubbers is through waterlocks and transport of cinder from under cold funnels of the boilers, through the cinder transporters, is made through canals of wet transport of ash with water supplied by washing water pumps The ash-cinder pulp then goes to airlifts which raise it through pulp lines to a height of +21 m in wet ash upper transport canals From the ESP bunkers ash also goes through waterlocks to the upper canal of the wet transport of ash and then through two 1020 mm pulp lines (one operating and one spare), by gravity, to the wet ash disposal pond The length of the pulp lines is 17 4 km Water consumption required to provide wet scrubbing, and to transport ash and cinder, is 1,000 - 1,100 tons/hour per one power block

Waste waters from chemical water treatment system result from the treatment of raw water by a combination of mechanical filters and chemical action As part of the scheme of water treatment, acid and alkaline wastes are discharged to neutralizing tanks After necessary treatment (if necessary, with addition of $Ca(OH)_2$) the waste waters are discharged through a system of wet transport of ash into ash disposal Average daily volume of neutralized water reaches 200 tons a day Periodically, manual sampling of the quality of discharged waste is performed for pH (standard is 6 5 - 8 5, actual value in 1995 was 8 29) The sampling is made to help prolong life of pipelines Drainage waters from the neutralization tank are put into an underground tank (dirty compartment) This tank collects waters the following sources

- Mechanical filters
- Na-cation filters
- Mixed filters
- Salt removal plants
- Discharge from neutralizing tanks
- Discharge of chemical treatment system

Purified discharge from the boiler and turbine rooms, as well as from water chemical treatment tanks, is put to the clean compartment of these underground tanks After collection in underground tanks, the discharge goes to the ash wet transport canal or to neutralizing tanks Total volume of the drainage through the underground tank is 100 m^3 daily Once a day manual sampling for pH takes place This is the only parameter which is defined Kazakstan legislation does not provide for controlling other parameters World Bank determines the parameters for such discharge streams in accordance with sanitary waste waters standards (see item on sanitary waste waters) In the case of this facility, where the discharge is into the ash disposal pond, the quality of the discharged water could not be determined

Potable Water treatment system discharge waste Water from the Irtysh-Karaganda canal passes through pipes of the chemical treatment system and is pumped to the "Struya" drinking water unit where it is treated Treatment system waste is discharged into a washing water tank and is then discharged into storm water sewerage There is no monitoring of the discharged water

Industrial water supply system and boiler room drainage water are used to cool turbine condensers, turbine oil-coolers, generators, flue gases pump bearings, blowing fans and other auxiliary equipment Additionally, this water is used for fire fighting, for washing boilers and for wash down of rooms The source of the Industrial water supply is the Shandaksor cooling reservoir which is fed from the Irtysh-Karaganda canal This feeding is now made through the Shidertinsky canal and by design, in the future, will be supplied from the reservoir of Power Station No 1 (see Appendix 17) This reservoir is an area of the station, which is artificial-made on lands, given to the station, not a natural reservoir The reservoir is for the exclusive use of water (The Act defining this exclusive usage is presented in Appendix 18) and therefore is not under the jurisdiction of the fish protection bodies which control all natural basins in accordance with water legislation The reservoir is considered to be equivalent to industrial spray basins It has both the required temperature and salinity characteristics which satisfy the technical requirements of the station (Information on the Industrial Water Supply system is presented in Appendix 19) The Cooling Reservoir has the following parameters at the approved design standard level of 132 5 m

- Total area equal to 42 68 km^2,
- Volume of water equal to 259 76 million m^3,
- Maximum depth of 12 6 m
- Average depth of 6 1 m
- Area of shallow waters with depth less than 2 5 m is 17% of total area

A filling-type reservoir was made in a cavity of the occasionally dry inland Shandyksor lake without supporting construction and fencing dams Aktasty drying river flows into the lake in the north and an unnamed creek flows into it from the south-west The lake is inland and its watershed area is 202 km^2 Formerly, under natural conditions, water flowed into the lake during spring floods only The maximum level reached in the lake, in watery years, is 1 5 m Grounds of the lake cavity are salty to various degrees The approximate volume of water-soluble salts in the ground, 3 m deep, in the area of bottom and on the sides of the reservoir, amounts to 3,200,000 tons According to analysis, the soluble salt content in the north-east wide cavity is 60-70 g/kg Average annual volume of salty surface water flows into the reservoir is 1270 tons, at an average mineralization of water of 930 mg/l

A water balance of the station is included as Appendix 20 Consumption of water, according to accounting documents, is represented on form 2-TP-vodkhoz and in an enclosed explanatory note (see Appendix 21) Nearly 85% of water taken into the station is used to cool the main turbine condensers This water experiences a temperature rise of 8-9^{0}C (summer average = 8 3^{0}C, winter average = 9 3^{0}C) and is returned to the cooling reservoir without changing its chemical composition For two block operation water is pumped by four circulating pumps, providing a water flow of 40-60 m^3/h The technical water supply scheme is represented in Appendix 22 The actual water quality (chemical composition) is represented in Appendix 23 Sampling for chemical composition is made once a quarter The World Bank requirements for chemical composition of this water include the following not to exceed parameters pH=6 9, BOD_5 = 50 mg/l, total heavy metal ions =10 mg/l, oils = 20 mg/l, suspended solids = 50 mg/l Actual values (as per the above documents) are pH = 6 6, BOD_5 -not defined, total

heavy metal ions = 0 4 mg/l, oils = 0 04 -0 07 mg/l, suspended solids = 195 mg/l Temperature of circulating water at inlet and outlet is continuously measured Under a two block operation the average seasonal temperature in the reservoir is 14-17^{0}C in the summer and 11-12^{0}C in the winter In the hottest summer months the inlet/outlet temperatures are 23-26^{0}C and 31-34^{0}C respectively (June-July, 1995/96) It is anticipated that the future operation with the design capacity of 16 power blocks at Power Station No 1, along with Power Station No 2, will result in the water supply canal temperature reaching 35^{0}C, provided the level of the lake rises and its area increases Warming of water is harmful to microorganisms at the point of discharge of hot water only In the other areas the existing values are high For instance, density of microorganisms in the cooling reservoir is 10-18 times and the biomass 4-10 times, the values of the nearby Ekibastuzskoye spare reservoir, which has similar morphometry, mineralization, and ichtyfauna being fed from the same source It should be noted that the present temperature regime of the reservoir complies with local legislative requirements However, World Bank's requirements on discharge of hot water into natural basins limits the increase at the place of mixing to 5^{0}C or 3^{0}C when the background temperature is 28^{0}C It is felt that these requirements are not applicable to the reservoir of Power Station No 2 since it is not a "natural" basin

One other source of liquid discharge is a cold blowdown water from the boilers (P-57P) during a 1 5 hour period when nearly 1,100 tons of chemically pure water is discharged into circulation pipes Boiler drainage systems discharges are not contaminated and this water is sent to recirculation lines or returned to turbine condenser Boiler washwater and building wash down water is discharged into the ash removal wet transport system There is no sampling for quality of this water
Another source of discharge is waste from the cleaning of the turbine condensers The cleaning process includes preliminary drying and washing of loosened scale, with the circulating water discharging into discharge canal This cleaning process takes place, on average, once every six months Under special conditions cleaning with chemicals may take place in which case the waste water is discharged into neutralizing tanks of the water treatment plant and then to ash disposal system Sampling of this waste consists of measuring pH in the neutralizing tanks

3 3 Materials Handling and Storage

3 3 1 Storage of chemicals

Requirements regulating the storage of chemicals, oils etc , are covered in construction standards and rules (CSR) in accordance with State Standards (GOST) of the USSR These standards require

- Providing isolation against possible emissions in environment,
- Use of special materials for storehouses, reservoirs for collection of emergency wastes and their transport,
- Use of special devices for filling, discharge and measuring of chemicals,
- Devices for collection and neutralization of spilled or leaked chemicals,
- Continuous or periodical control for technological processes and pollution of accommodations and rooms

Information on the water treatment chemicals used at the station tanks and consumption are presented in Table 3 below

Table 3

Chemicals Storage at Ekibastuz No 2 (1995)

Chemical	Tank No /vol , m^3		Concent-ration, %	Annual consumption, tons	
				Plan	Actual / product
Sulfuric acid, (H_2SO_4)	1	100	93	350	319/100%
	2	100	93	350	319/100%
Caustic (NaOH)	1	100	43	350	319/100%
	2	100	43	350	319/100%
	3	100	43	350	319/100%
	4	100	48	350	319/100%
			43?	820?	710/43%
Burnt lime (CaO)	1	580	70	470	440/70%
	2	580	70	470	440/70%
Sodium salt (NaCl)	1	85	8	280	200/95%
	2	85	95	280	200/95%
	3	35	95	280	200/95%
	4	35	50	280	200/95%
Green vitriol ($FeSO_4$)	1	85	50	180	150/50%
	2	85	50	180	150/50%
	3	85	50	180	150/50%
	4	35	50	180	150/50%
	5	35	50	180	150/50%

The concept of the water treatment system is presented as Appendix 19 All of the above chemical storage tanks, along with the spent materials tanks and the neutralizing tanks, have been constructed in accordance with the above mentioned standards and are properly operated and maintained in good repair Periodic sampling of the discharges takes place The neutralization unit provides neutralization of acid and alkaline waters in the neutralizing tanks (NT) In 1995 the waste waters from water conditioning unit (WCU), after chemical treatment, had an average pH = 8 29 (standard for pH is 6 5-8 5) Manual sampling of waste waters is made once a day There is no automatic sampling of these waste waters The neutralized waste waters are discharged into the wet transport of the ash disposal system

- Neutralizing tanks Waste waters discharge of 200 m^3 daily
- Underground tanks Waste waters discharge of 100 m^3 daily

3 3 2 Storage of Mazut

To store mazut at Power station #2 there are 6 elevated tanks with hard roof Three of them have a capacity of 3,000 tons (with diameter of 18 98 m) The others three of 10,000 tons (with diameter of 28 5 m)

Storage temperature is 80-85^{0}C, speed of filling 240 m^3/h
Diameter of vent is 400 mm (one vent)
Insulation is made of glass wool 100 mm thick
Filling of the tanks is made from beneath There are data on mazut consumption in Appendix 24 from 1991 to 1995 Total portion of mazut, used for starting the boilers, is less than 5% of total quantity of burnt fuel

3 3 3 Storage of Fly Ash and Bottom Ash

Discharge of ash-cinder waste from Power station #1 and Power station #2 is made into Karasor lake, located 25 km east from Power station #1 and 12 km from Power station #2
Until filling with the ash-cinder waste the lake was inland salty-bitter lake 0 5-1 m deep In dry years level of water dropped to 0 3 m

- Cavity of the lake is 3 km^3
- Origin area of surface is 40 km^2
- Absolute bottom level is 67 5-68 0 m
- Lake Size at present is length = 12 km, width = 3 km, depth = 6 5 m, area = 60 km^2
- Volume of ash sediments is 37 million m^3
- Cavity of the lake has slight slopes (3-4^0) and a slightly wavy plain
- Overall mineralization of water in the lake is 8 6-12 g/l

3 4 Oil-filled Electrical and Hydraulic Equipment

In oils of electrical and hydraulic equipment there is a lot of polychlorbiphenyls (PCB) However, there were no tests on presence of the PCB due to absence of instructions on treatment and handling of oils, containing PCB There are no emergency plan in case of emergency and plans of use of non-PCB oils either

3 5 Asbestos

Asbestos is used at the facility in thermal insulation There are no instructions governing the usage of asbestos containing materials nor are there any plans in place to change from asbestos less harmful materials

3 6 Waste Management

There is a determined list of waste waters for enterprises The main waste waters are the following ash and cinder, industrial and sanitary waste waters as well as slightly polluted circulating water Waste waters, discharged into Karasor lake, contains solutions, obtained in process of chemical treatment of water, storm water, waste waters of cooling of various equipment, purified sanitary waste waters and discharge waste waters of ash and cinder system

Characteristics of composition and volume of these wastes are represented in item 3 2 of the present report

The following analyses can be made at the enterprise

- On circulating water for transparency, colorness, nitrites, nitrates, ammonia, sulfates, aluminum, cuprum, pH, chlorides, hardness (overall), oxidizability, manganum, suspended particles, dry remnant, Mg hardness, Ca hardness, conductivity of water,
- In sanitary waste waters (Appendix 25) temperature, color, transparency, chemical consumption of oxygen, nitrites, nitrates, ammonium nitrogen, pH, phosphates, suspended particles, dry remnant, ooze dose, ooze index, biochemical consumption of oxygen for 5 days,
- Water of chemical room express methods for oils and fuel, oils (mechanical admixtures, presence of water, conductivity), neutralized waste waters from chemical treatment of water for pH

Waste treatment at the enterprise is regulated by normative-legal acts, there are at the station permissions for storage of the following wastes

- Ash and cinder,
- Solid sanitary waste,
- Construction litter, industrial waste

There are no lawful acts for other waste

There are the following waste stores at the enterprise

- Ash disposal,
- Fields-reservoirs of sanitary waste treatment station

Specially equipped fields of storage of ooze and reservoir to make sand dry are shown on technological outline of biological treatment station
According to poll among personnel tear of pulp lines and leakage of pulp on ground took place
There are no data on penalties Practice of ash and cinder storage is the same since starting operation of Power station #2

3 7 Contaminated Soil and Groundwater

Polluting sources are
i ash disposal with transfer of ash on dusting of beaches beyond boundaries of ash disposal and filtration of water of ash disposal in ground,
i pulp lines with leakage of ash pulp on tears of pulp lines and bringing the ash away with wind,
i collection reservoir of storm water and of oil trap waters, with penetration of water into ground,
i fall-out of ash from chimneys of the station

Soil pollution according to the Republic legislation and requirements of World Bank is determined with background concentrations and limit concentrations
The special challenge is an evaluation of influence of lasting technogenic objects if there are no data on condition of environment near polluting source before its construction The said is substantially concerned with zone of influence of Ekibastuz fuel-energetic complex, including ash disposal in Karasor lake
Background level is metals content level far away from places of environment pollution

There are no values for limit concentrations for many metals in home practice Suggested limits of heavy metals proved to be illogical towards background content, they are less or the same
It is not possible to be guided by such limits
In Western Europe there are limits, suggested by Kloke They include most of heavy metals and better correlate with background concentrations
Original limits for certain metals are worked out by CINAO They are a sum of two concentrations fixed background and a constant, added to the background (for anthropogenic pollution)
In general, home standards are better, their comparison with Kloke's is given in Table 4

Table 4

Comparison of Concentration Limits

	Limit Concentration, mg/kg					
	Zn	Pb	Cd	Cu	Ni	Cr
Kloke's	300	100	3	100	50	100
Home	150 background +20	1? background +20	0 6	40 background +35	Background +35	50

According to recommendations of foreign specialists on normalizing heavy metal levels pH should be taken into account, for instance

pH value	Cd, mg/kg	Zn, mg/kg
pH = 5	0 3	40
pH = 7	2 5	300

Negative influence of ash disposal on environment is caused by dusting of ash, collected in Karasor lake due to incorrect operation of wet transport of ash systems as well as due to ash emissions through chimneys Heavy metals are accumulated in ground and plants Despite low content of microelements in ash huge volumes of it cause collection of some elements in ground Substances of I-III grades of danger were taken into consideration in ash fall-out zone near 80 km long
It was shown that the main polluting substances are zinc up to 2 LC, plumbum up to LC or higher, molybdenum 1 5 background content, manganese 1 2 background content, cuprum 2 5 background content, chrome 4 LC, strontium 1 5 LC, vanadium 1 5 background content, barium 2 background contents, fluor 1 2 LC The maximum exceeding of standards for ground is observed for arsenic 15 to 50 LC, but it is of natural origin Fauna accumulates higher concentrations of the above mentioned substances (besides arsenic, manganese and vanadium) too
In general, there are substantial variations of toxic substances content in soil and plants
Snow sampling showed that in spite of high dusting from chimneys (up to 430 t/km^2) and of dusting of ash disposal (fraction of which is not defined), influence on ground is practically minimal This is caused by low content of microelements in ash Thus despite substantial transfer of ash from surface of ash disposal and its fall-out from chimneys, pollution of soil is now low However, in the future, in 10-40 years both at the present capacity of the station and on increase of the number of blocks, there is a calculated tendency of increase of pollution (The

materials are used from KAZECOEXP's work "Evaluation of influence of Ekibastuz Power station #1 and Power station #2 ash disposal upon environment")

The acting standards on pollution of underground waters as well as of soil, are based on comparison with background content of various substances Pollution at present and expected ones are very different At present at low enough accumulation of ash and cinder and water in Karasor lake as well as due to its natural location, total flow of underground waters is directed to the lake and there is no spreading of filtered water However, in case of postponing construction of design reverse water pouring system from ash disposal, in the nearest 7-15 years overfilling of the lake may happen followed by spreading to nearby surface basins as well as filtration of polluted water from ash disposal to underground waters of other places with poorer hydrogeological conditions In this case contradictions to "Rules of underground waters protection" requirements may take place Detailed information of underground waters pollution is given in Appendix 22

Filtration of water from collecting reservoir The collection reservoir is made without water isolation, chemical composition of water is not controlled (pH is measured only), this water may penetrate into ground Hydrogeological conditions at place of location of the pool are such that water may penetrate both to cooling Shandaksor lake and to Karasor ash disposal Actual way of infiltration is unknown In case of discharge in ash disposal there will be no problems Otherwise, underground waters and cooling lake may be polluted Degree of the pollution should be measured by monitoring quality of water in collecting reservoir and its infiltration into water-bearing layers This evaluation should be made in accordance with requirements of rules of surface and underground waters protection by comparison of quality of filtrated water with background

4 0 SUMMARY OF ENVIRONMENTAL COMPLIANCE

Ekibastuz dust coal Power station #2 (Power station #2) with determined electricity output of 2 x 500 MWt produces electricity in amount of 5 16 billion kWt-hours per annum using low-graded coal with high ash content from Ekibastuz deposit
The first energetic block of the power station was put into operation in 1990, the second in 1992
While producing electricity Power station #2 produces fly ash, nitrogen and sulphur oxides emissions in air, consumes water from water sources and discharges liquid and solid wastes in environment

4 1 Air emissions

The activity of the Ekibastuz Power station #2 towards air protection is regulated by the Law of Environment Protection of Kazakh SSR of 1991, by the Law of the Kazakh SSR "Concerning Protection of Air", by the State Standard 17 2 302-78 "Protection of Nature Air Rules of setting acceptable emissions for harmful substances by industry enterprises" and other normative instruments
From the beginning of construction and putting into operation Power station #2 there were serious violations of environment protection legislation Construction of Power station #2 is fulfilled without positive conclusion of State ecological expertise The main reasons of absence of the conclusion are unsatisfactory design methods on ash collection and reducing NO_x emissions in air Financing of construction of Power station #2 was often interrupted by resolution of Ministry of Ecology and Bioresources of the Republic of Kazakstan

Design ash collection system efficiency, which consists of 4 wet fore-included scrubbers and two four-field ESP's, is 99 5% However, operational efficiency of such system is lower than 99%, resulting in considerable exceeding the standards determined for Power station #2 Comparison of the determined standards on fly ash emissions in air, requirements of World Bank and actual values of the emissions for Power station #2 is represented in Table 2, item 3 1 2

Standards for emission of nitrogen oxides with flue gases in air at the Power station #2 are exceeded too Despite the boiler of the block #1 is equipped with special two-register burners with low NOx emission, actual NOx concentration in flue gases for the boiler amounts to 800 - 1200 mg/nm^3 vs permitted standard for the station of 856 mg/nm^3

The boiler of the block #2 is equipped with tangential burning system, injectors for tertiary blow and special burners with low NO_x emission However, it also exceeds the determined standards Comparison of the determined standards on NO_x emissions in air, requirements of World Bank and actual values of the emissions for Power station #2 is represented in Table 2, item 3 1 2

Boilers of the Power station #2 are not fitted with special flue gases desulfurization systems therefore the standards for SOx emissions with flue gases in air for the Power station #2 are not kept Comparison of the determined standards on SO_x emissions in air, requirements of World Bank and actual values of the emissions for Power station #2 is represented in Table 2, item 3 1 2 Chimney and boilers of the Power station 2 do not have instruments for automatic controlling emissions in air

Pavlodar oblast Department for Ecology and Bioresources has presented penalties to Power station #2 in amount equivalent to US$ 5 million for polluting substances emissions without having the permission Power station #2 has gotten the permission for polluting substances emissions in June, 1996 only However due to exceeding the standards for the emissions, the claims to Power station #2 for the exceeding the standards for emissions in air should be expected

To make the emissions in air meeting the standards for Power station #2 a plan of measures was arranged to reduce fly ash and nitrogen oxides emissions, scheduled until 199 The plan provides raise of efficiency of the operating ash collection equipment to 99 5% by repairing them and by equipping the block #1 with stage burning system and new low NO_x emission burners Expenditures for these steps will amount to US$ 24 million Measures for reduction of SO_x emissions are not planned It should be noted that the scheduled restoration of efficiency of the ash collection equipment according to design scheme, judging by experience of Ekibastuz Power station #2 #1 may not provide their reliable operation and design efficiency

4 2 Water Supply and Liquid Effluents

Issues of water resources protection and their rational usage in the Republic of Kazakstan are regulated by Law of Environment Protection, Water Code of the Republic of Kazakstan, Rules of source waters protection and other rules and standards Ekibastuz Power station #2 is big user of water from Irtysh-Karaganda canal In 1995 to fill cooling reservoir, to provide wet transport of ash and cinder, to operate water conditioning units, to provide drinking water needs 82 million m^3 of raw water were used Water consumption in return water cooling system amounted to 686 million m^3 Power station #2 does not have discharge of untreated waste waters in natural water sources

Power station #2 produces the following liquid wastes

- waters polluted with mazut and oils,
- storm waters,
- waste waters from demineralization water units,
- sanitary waters and others

All the waste waters after respective treatment or neutralization are put with ash pulp to ash disposal Hydrogeological conditions at location of the ash disposal are so that there is no noticeable pollution of underground waters in this area There are no violations of nature protection legislation towards discharge of waste waters At Power station #2 a system of wet transport of ash and cinder is used At present this system is forward flow because design scheme of return of treated water from the ash disposal to wet transportation of ash wastes and other needs is not implemented By that the requirements of legislation on rational usage of water resources are violated

In ash disposal of Power station #2, Karasor lake, in 1995, 11 6 million m^3 water were discharged It is expected that under such a pace of filling the lake, the problems with underground waters and surface basins pollution may take place

4 3 Materials Handling and Storage

Organization of acceptance and storage of coal and mazut at the Power station #2 does not seem to be dangerous in respect of environment pollution

The calculations, made while determining standards for polluting substances emissions from all sources of Power station #2, has shown that there are no noticeable concentrations of dust coal and carbohydrogens beyond industrial site of Power station #2

Therefore implementation of any additional measures to prevent environment pollution under acceptance and processing of various materials (coal, mazut etc) is not required

At Power station #2 asbestos is widely used as insulating material However special measures on its safe usage are not taken

4 4 Contaminated Soil and Groundwater

Wet ash disposal in Karasor lake, due to the hydrological peculiarities (inland cavity) of the lake, provides an ecologically safe storage However, the absence of return water system with return of treated water for technical needs in the future will result in fast overfilling of the ash disposal and leakage of water from it at first by filtration, then by splashing At the station technology of undusting of dry ash fields is not implemented either, resulting in their dusting and transfer of ash to ground surrounding the ash disposal To prevent possible negative influence upon environment it is required to implement the measures towards return water system and undusting of ash fields

Levels of soil pollution in the area of Power station #2 are regulated according to legislation of the Republic of Kazakstan by background concentrations and limit concentrations Soil polluting sources are fly ash from chimneys of Power station #1, #2 and ash from the dry ash fields Because the Ekibastuz Power stations #1, #2 are 20 km away from each other and they have one common ash disposal, it does not seem possible to separate their influence upon soil pollution Despite a low content of microelements in the ash, large amounts collect in some ground areas

It was shown that the main polluting substances are zinc up to 2 LC, plumbum up to LC, molybdenum 1 5 background content, manganese 1 2 background content, cuprum 2 5 background content, chrome 4 LC, strontium 1 5 LC, vanadium 1 5 LC, barium 2 background

contents, fluor 1 2 LC The maximum exceeding of limit concentration in ground is observed for arsenic, but it is of natural origin

In general, there are substantial variations of toxic substances content in soil and plants
Snow sampling showed that in spite of high dusting from chimneys (up to 430 t/km^2) and of dusting of ash disposal (fraction of which is not defined), influence on ground is practically minimal This is caused by low content of microelements in ash However, in the future, at the present capacity of the stations (Ekibastuz Power station #1 4,000 Mwt and Power station #2 1,000 Mwt) there is calculated tendency of increase of soil pollution

5 0 CONCLUSION

Air Protection

At Power station #2 there are problems concerned with violation of environment protection legislation of the Republic of Kazakstan In particular according to available information on emissions in air the following violations occur

- Virtual exceeding of limits of emission of fly ash and sulfur and nitrogen oxides
- Dusting of dry beaches of ash disposal

Condition of control for harmful substances emissions with flue gases from boilers in air meets the republic but does not meet the international requirements due to not being able to provide continuous measurement of concentration of polluting substances and emission of flue gases
Absence of continuous automatic monitoring of emissions in air with use of respective certified measuring systems makes it difficult to fulfill correct evaluation and present volumes of emissions in air and degree of exceeding determined limits at Power station #2 Due to serious financial problems and absence of acceptable suggestions, management of the station proposes restoration of combined system of ash collection (ESP's with fore-installed wet scrubbers Venturi) what may lead to design ash collection efficiency However, due to unreliability of the system it can provide meeting the republic requirements for one to two years Thus it is necessary to consider alternative variants of modernization and to choose respective equipment
In the future due to present plans to increase capacity of the station, possibly, it will be necessary to use additional technology to reduce sulfur oxides emissions The same outlook expected towards World Bank's requirements because the station instead of determined 100 tons of sulfur dioxide per day emits 120 tons with two blocks of total capacity of 1,000 Mwt

Water Protection

In general, policy of Power station #2 concerning ecological outcomes of emissions of waste waters and according to requirements of normative acts may be characterized by different components

- By sanitary waste waters there is no discrepancy,
- By water for transport of ash wastes, there is no return of treated water from ash disposal and its usage in closed circuit, provided by design, therefore in case of detaining of starting this system for 5 - 7 years, there is a risk of overfilling of Karasor lake and pollution of underground waters beyond the ash disposal,
- By storm waters and waters polluted with mazut, a filtration of water from collecting reservoir into underground waters may take place with possible penetration of the waters in cooling reservoir, therefore control for chemical composition of water and investigation of concrete ways of discharge of the water are necessary,
- By waste waters from chemical treatment of water there are no discrepancies,
- By storage of chemicals there is no discrepancy,
- By storage of solid and liquid wastes, there is discrepancy with design towards storage of ash and cinder, namely formation of ash beaches and their dusting There are no problems with storage of solid sanitary wastes and construction litter,
- By pollution of soil and underground waters, despite huge quantity of ash, brought away with wind to nearby area, pollution of soil is still low due to likeness of their chemical composition Works on stopping dusting are now planned only There is infiltration of water from ash disposal into ground, but its spreading is limited by boundaries of Karasor lake, though trouble will happen on overfilling ash disposal due to detaining with starting closed circuit water system,
- By cooling water (circulating water), and respectively by cooling reservoir there now is no problem However, it should be noted that on putting into operation design scheme of closed circuit water supply for wet transport of ash mineralization of water in the reservoir will rise due to reducing of blowing This, in its turn, may lead to worsening of operational regime of condensers, and as a result, to overconsumption of fuel to produce electricity Influence of higher mineralization on underground waters should be studied closer Air transfer of salts in air from reservoir will be more and from ash disposal less and in all, 21% less due to reducing consumption of water from Irtysh-Karaganda canal

6 0 RECOMMENDATIONS FOR MITIGATION & REMEDIATION OF EMISSIONS

6 1 Air Pollution

- To acknowledge conclusions of exceeding emission limits for nitrogen oxides, sulfur oxides and ash due to absence of reliable monitoring emissions at Power station #2, correct measurements of nitrogen oxides, sulfur oxides and ash content in flue gases of Power station #1 and Power station #2 should be done by instrumental methods Cost of purchase of portable analyzers of flue gases is about US$ 20,000

- To make emissions of Power station #2 meeting requirements of normative documents the following steps are suggested

NO_x - organization of stage combustion with installation of new NO_x low emission burners to reduce concentration of NO_x to 550 mg/nm^3
Cost per a block is US$ 1 5 million
fly ash - reconstruction of ash collection system, namely change of the present system (wet scrubbers + ESP's) for
a) six-field ESP's and system of flue gases with SO_3 conditioning,
Capital costs per a block are US$ 64 x 500,000 = US$ 32 million, exploitation costs US$ 50 x 500,000 = US$ 25 million,
b) ESP's + retrofitting filters
Repair of ESP's per a block is US$ 1 million + US$ 50 x 500,000 = US$ 26 million,
c) retrofitting filters
Reconstruction of ESP's with installation of retrofitting filters is US$ 35 x 500,000 = US$ 17 5 million per 1 block

- It is necessary to equip energetic blocks with up-to-date devices to control emissions of nitrogen oxides, sulfur oxides, carbon oxides, and to define consumption of flue gases

6 2 Water Pollution

Recommended steps to improving the condition are

- It is necessary to finish construction of line of purified water and pump station It will allow to protect raise of underground waters followed by penetration of polluted discharge from ash disposal to other lakes and it will substantially reduce consumption of water from Irtysh-Karaganda canal,
- To stop dusting of ash beaches it is necessary to mix clay in pulp or to install hydraulic excavator on aquatic surface of ash disposal,
- To provide making ash beaches evenly wet it is necessary to make floating pulp discharge units of pontoon or other type,
- To prevent pulp lines from tear and leakage of pulp on ground forms it is necessary to install gland compensators for temperature expansion,
- To study possibility of underground waters pollution through bottom of sediment reservoir for storm waters and water polluted with mazut, which does not have water isolation,
- To put into operation design scheme of feeding the reservoir of Power station #2 through reservoir of Power station #1, this will allow to improve salt regime in the reservoirs and to reduce waste of water

Note Estimate of costs to implement these recommendations should be made more precise during the next stage of work

Burns and Roe Enterprises, Inc

Technical Report

KAZAKSTAN REGIONAL ENVIRONMENTAL IMPROVEMENT STUDY

REGIONAL POWER PLANT SURVEY

ERMAKOVSKAYA POWER STATION

FINAL REPORT

December 1996

Prepared by	Local Kazakstan Specialists and Burns and Roe Enterprises, Inc
Submitted to	U S Agency for International Developmentand The Government of Kazakstan
Contract No	CAN-0002-Q-00-3154-00 Regional Environmental Improvement Study Delivery Order No 9, Task 4

REGIONAL SURVEY REPORT

Table Of Contents

Executive Summary

1 0 INTRODUCTION 1

1 1 Background 1
1 2 Facility Operations 1

2 3 THE FACILITY 2

2 4 Location 2
2 5 History and Environmental Setting 2
2 6 Facility Description 3
2 7 Environmental Management Structure 3

3 0 CHARACTERISTICS OF FACILITY EMISSIONS 4

3 1 Air Emissions 4
3 1 1 Emissions Sources 4
3 1 2 Emissions Limits 5

3 2 Water Supply and Liquid Waste Effluents 6
3 2 3 Sources of Water Supply 7
3 2 4 Liquid Effluents 9
3 2 5 Effluent Treatment 10

3 6 Materials Handling and Storage 15
3 3 7 Storage of Chemicals 16
3 3 8 Storage of Mazut 16
3 3 9 Storage of Fly Ash and Bottom Ash 17

3 10 Oil-Filled Electrical and Hydraulic Equipment 20
3 11 Asbestos 22
3 12 Waste Management 23
3 13 Contaminated Soil and Groundwater 25

4 0 SUMMARY OF ENVIRONMENTAL COMPLIANCE 26

4 1 Air Emissions 27
4 2 Water Supply and Liquid Effluents 28
4 3 Materials Handling and Storage 29
4 4 Contaminated Soil and Groundwater 30

5 0 CONCLUSION 32

6 0 RECOMMENDATIONS FOR MITIGATION & REMEDIATION OF EMISSIONS

6 1 Air Pollution 35
6 2 Water Pollution 37

Executive Summary

1 0 INTRODUCTION

1 1 Background

The Ermakovskaya power station is located in Kazakstan, in Pavlodar oblast The facility mailing address is

638310, Pavlodarskaya oblast
Aksu Village
Republic of Kazakstan (telph -3182, 795-433, fax-3182, 795-381)

The current owner of the facility is "Kazakstabkhrom"
The Director of the station is Abduazim Rustambayev (teleph - 23-50)
The Chief Engineer is Vyacheslav Kuksa (teleph - 23-51)

The following key plant staff were involved in the facility audit

Vladimir Novik - Deputy Chief Engineer
V Fenev - Head of the Boiler-Turbine Dept
E Safronov - Head of the Planning/Technical Dept
VI Belomestnov - Head of Adjustment and Measurement of Heating Equipment
E Shabarov - Head of the Chemical Dept
II Bezrukov - Head of the ESP Dept
E Sinelnikova - Head of the Analytical Laboratory
F Kazak - Head of Hydro-Technical Services

The audit team was comprised of the following members

Burns and Roe Company

- John Doyle - Principal Mechanical Engineer
- David Cooksley - Environmental Specialist
- Gennady Doroshin - Leading Power Plant Specialist of the Kazakstan Scientific Research Institute of Power Engineering

Local Kazakstan Specialists

- Alexander Pescherov - Senior Specialist at Kazakstanenergo
- Ludmila Ljashenko - Head of the Ministry of Ecology and Bioresources Scientific Research Department for Ecology Problems
- Rafail Akhmetov - Chief of the Ecology Department at Kazakstanergo
- Mikhail Hojatelev - Leading Scientific Specialist at the Kazakstan Scientific Research Institute of Power Engineering
- Gennady Kropochev - Chief of the Testing Department at Ekibastuz Power Plant No 2
- Alexander Parucimov - Leading Specialist at the Almaty Ecology and Bioresources Department

This environmental audit was performed as part of a regional survey of power plants performed as part of a USAID funded "Regional Environmental Improvement Study" of environmental problems within the power sector of Kazakstan This study, along with the related audits, was directed by Burns and Roe Company in cooperation with Kazakstanenergo and the Ministry of Ecology and Bioresources of Kazakstan The audit was performed in accordance with the

guidelines of the European Bank for Reconstruction and Development as presented in their document "Environmental and Health & Safety Standard Audit Report Format" The purpose of this audit was twofold The primary purpose of the audit, as part of the regional survey effort, was to characterize the current emission levels at the facilities investigated in order to develop recommendations for technology improvements which would be applicable to the power sector of Kazakstan In this regard, the Ekibastuz facility was chosen for audit since its emission problems are considered to be representative of those of the power sector in general The second purpose of performing the audit was to serve as an opportunity for the team of local specialists to apply the classroom training received earlier in the Study regarding how to perform an environmental audit and how to western technologies could be applied to mitigate current emissions problems

The audit was performed for gaseous, liquid, and solid emissions It assessed the current discharges and the conditions which generate them, the methods of reporting emission levels, the technology currently in place to deal with these emissions, and plans to reduce emission levels Available documentation, such as research reports, facility records, conclusions of committees, etc were analyzed

Following the audit, the audit team's preliminary findings were discussed with the staff of the city of Pavlodar, Department of Ecology and Bioresources These included department head Mr Nikolai Khlystun, deputy Zhumabek Usenov, and division heads S Guber, T Orlik, and L Uchenik

1 2 Facility Operations

Ermakovskaya power station is coal-based power station with total output of 2,400 MWt operating on coals from nearby Ekibastuz The station produces electricity for supply to enterprises of the Pavlodar industrial region, and can supply electricity to Russia The station uses water from the Irtysh river for turbine condenser cooling The cooling system is once through with heated water discharging back to the Irtysh

Fly ash and bottom ash wet sluiced to a wet ash disposal site near the facility

2 0 THE FACILITY

2 1 Location

The site of the station is located on the left bank of Irtysh river, 9 km north-west from the town of Aksu (Ermak), 1 km south-east from the Ermak power plant village, and 19 km away from city of the city of Pavlodar The number of personnel working at the station as of June, 1996 was 3099 These personnel live in the town of Aksu or in the power plant village Population in Aksu is 50 thousand people and that of the camp is 4 thousand The town of Aksu is located on the left bank of Irtysh river and consists primarily of buildings of 5 or 7 stories In the village there are both multi-story blocks of flats and cottages The village is located on the bank of a canal and old watercourse of the Irtysh which are used for discharge of condenser cooling water

The flora is typified by poplar, aspen, and maple trees as well as small amounts of pine trees and willows and runt bushes on the banks of the river The ground forms are slightly hilly steppe with a form factor of 1 There are no recreational zones and nature preserves in the zone of influence of the station A site plan of the area is presented as Appendix 4

Immediately adjacent to the power station are located the following structures and features

- brick factory,
- ferroalloys factory,
- metal constructions factory,
- reinforced concrete constructions factory flooded meadows and lands of the Potaninsky collective farm

The large Irtysh river flows 5 km away from the power station There are no reservoirs nearby Climate peculiarities of the region are presented as Appendix ____ (Table 9) The average maximum outdoor air temperature in the hottest month (July) is 27 5^{0}C and average temperature in the coldest month (January) ranges from 9^{0}C to 17^{0}C below zero

2 2 History and Environmental Setting

Before May, 1996 Ermakovskaya power station was a part of the national electric energy company "Kazakstanenergo" The principal technological processes, composition of operating equipment, fuel, sewage treatment equipment, buildings and constructions had not been changed Coal storehouse and tanks for storage of mazut are located on industrial site of the station Storage of ash is organized on wet ash disposal far away from the station Place of storage of solid wastes and construction trash is also far away from the station
There are no demolished buildings, unused mazut storage tanks, or chemical storage tanks on the facility site

Geological and hydrogeological conditions
The power station is located on plain on the first and partially on the second inclined terraces of Irtysh river, formed by sabulous clay and sandy sandwich-like upper-and-middle quaternary sediments
The base is built up by sandstone, argillites, bodies with plenty of ferriferous minerals siderite, glauconite, pirite, which feature carbonates
Formations of middle quaternary period make up two complexes of sediments The more ancient one is represented by alluvial and alluvial-laky, sand-gravel and sandy sediments Formations of upper quaternary period are represented by rough sands with admixture of pebble or by light-gray sands and greenish-gray alevrites, seating in waterproof masses of Pavlodar and Aral suites The suite of green clays, Aral, uniform and well kept, is widespread Clays are bedded, carbonatous, they seem to be formed up in large reservoirs They are of lower Miocene Pavlodar suite, consisting of red and gray clays with layers of gravel sands, contains typical and rich complex of hipparion fauna, studied in the neighborhood of Pavlodar It is primarily Neogenic flat alluvial-laky plain with general inclination to North-East
The extreme preservation of the ground forms is stressed with large development of lakes, primarily inland lakes, with bitter-salty water Wide Tabylgasor hollow of effluent on the left bank of Irtysh river reaches 10 - 20 km wide The principal water way of Kazakstan, Irtysh river, forms its effluent, primarily, in the territory of Kazakstan Altai, and while entering the plain it has no tributaries Type of feeding of Irtysh is glacial and snowy The catchment area near city of Pavlodar is 240,000 km^2 The average effluent for a many years within boundaries of Pavlodar oblast amounts to 0 049 km^3 Water conditions of Irtysh are influenced by hydrographic and morphological peculiarities of part of the watershed, which is upstream, namely, that the river, on entering the plain, has large watercourse, 8 to 15 km Besides that, on putting into operation Bukhtarminskaya hydroelectric station in 1980, effluent from upstream Irtysh is completely regulated Morphological peculiarities of the watercourse are conducive to flattening wave of flood waters and losing a part of river effluent For instance, under natural conditions of the river, losses of effluent on the sector from Semiyarskoye to Pavlodar had been 1 3 km^3 annually, and for the period from 1960 until 1985 they raised up to 3 16 km^3 annually In the future the tendency of

increase of losses will remain and primarily due to decline in absolute moisturization of the territory because of anticipated raise of air temperature, followed by decrease of layer of rains and increase of layer of evaporation

Canal Irtysh-Karaganda goes through territory of the oblast, providing water supply from Irtysh river to Central Kazakstan with simultaneous water supply to enterprises on the left bank of Irtysh Intaking into the canal is carried out from stream of Byelaya, above town of Aksu Consumption of water in the canal ranges 45 m^3/s (during cold period) to 95 m^3/s (during vegetative period)

Potential supplies of underground waters amount to 6 24 km^3 Water-bearing rocks of Paleogenic sediments on the left bank engage considerable areas and are characterized with significant variety of mineralization and chemical composition Dry remnant ranges 0 2 to 107 g/l, and prevails at 1 - 5 g/l, showing their poor quality

Ash and cinder disposals of Ermakovsky industrial center are natural hollows, located on the first and the second terraces above watercourse of Irtysh river, 1 - 3 km away from the watercourse, quality of the underground waters is aggravated by infiltration of waste waters with fluor and arsenic (C_F up to 3 9 mg/l, C_{As} up to 0 06 - 0 4 mg/l) The area of contamination with fluor had amounted to 5 4 km^2, but in 1989 it reduced to 2 4 km^2, which was caused by improvements in water protection activity

For the past ten years place of storage of ash-cinder wastes changed the old ash disposal (#1) is completely filled up and is out of operation, and new one (#2), farther, operates To sectionalize the ash disposal, clay and sand are utilized from near-located quarries, which are a place of storage of household garbage and construction trash

On side part of Kazakh bow area, on the left bank, underground waters are not hydraulic, actually unisolated from outer pollutions Water-bearing rocks (due to hydrogeological conditions of formation) are characterized with poor filtrational properties, they have prevalence of waters with high mineralization Due to this, quality of the underground waters is poor, they have intensively been polluted in industrial and mining regions

2 3 Facility Description

The Ermakovskaya facility is a coal fired, condensing cycle, power station The Design output of the station is 2,400 MWt Power blocks were put into operation from 1968 until 1975 The basic facility consists of the following

- Eight (8), 300 Mwt power blocks with TGV generators
- open distributive units 110 kV, 220 kV, 500 kV
- one side dump car with capacity of 700 - 900 t/h
- two rotor dump cars with capacity of 1300 t/h each
- mazut division with 7 tanks, with total capacity of 46,000 m^3
- a three-stage desalination water treatment of 450 t/h capacity
- a startup boiler plant with 5 DKVR 10/13 boilers with a capacity of 50 Gcal/hour

General site plans for the station and main building are presented as Appendix 1 Each power block includes twin-body boilers PK-39-I (II) with capacity of 950 tons of steam per hour, turbines K-300-240 HTGZ and ash collectors, flue gas pump and chimney as well Black coal of Ekibastuz deposit with ash content of 38%, heat of combustion of 3700 kcal/kg and output of fly substances of 31%, as well as mazut of class M-100 with heat of combustion of 9600 kcal/kg, ash content of 0 1% and sulfur content of up to 1 9% were approved to be the basic design fuels Data on quality of the used fuel are presented in Appendix 6 and a fuel balance in Appendix 7 In 1995 electricity production amounted to 11,250,011 thousand kWt-hours At the same time heat is delivered to meet the needs of enterprises in northern industrial center and village of Aksu Design

heat output is 195 Gcal/hour Steam from unregulated steam intakes of the turbines as well as from steam boilers DKVR-10/13, installed at starting boiler-room is used to produce heat For 1995 a production of heat was 266,468 Gcal Information on operation of the power blocks for uncompleted year 1996 are presented in Appendix 8

2 4 Environmental Management Structure

On initiative of Ministry of Power engineering of the Republic of Kazakstan, by orders of director since 1987 a structural subdivision for environment protection had been created and now works (Appendix 9) It includes a number of officers from fundamental technological subdivisions carrying out these activities alongside with the basic ones to fulfil production program

General management is performed by Chief Engineer, who is responsible for the following preparing and agreeing design standards of waste and emission limits, getting permissions for the wastes and emissions, preparing and implementing measures for achievement of approved design standards, condition of sewage treatment equipment, efficiency of its operation, carrying out its operation, its repair, re-construction and testing

The duties of heads of the subdivisions, which are involved in the structure, are described in the abovementioned orders In all, the structure consists of 13 people Policy of the station management in the field of environment protection is determined by contradictions in the republic standards and imperfection of the used technologies of treatment of wastes and emissions as well as extreme wear-and- tear of the sewage treatment equipment

Besides that, the policy increasingly depends on financial condition of the station Shortly before now this issue was defined by insufficient financing from national budget

The station management states that its purpose is an achievement of sanitary design standards on wastes and emissions Republic legislation allows to implement achievement of this purpose by stages, agreed with oblast ecology supervising bodies

The achievement of the stage limits was planned to be done with use of technical innovations, worked out by specialized scientific and design institutions jointly with manufacturers from Russia The possibilities of contacts with western firms (Siemens, Lurgi etc) were also discussed

There are plans for implementation of monitoring for the emissions For the period 1996 - 1998 the following measures are planned

- hardening control for keeping regime maps, operation of testing instruments and automatic units,
- organizing an effective distribution of load to boilers with lowered specific emissions,
- providing achievement of efficiency of ash collection in ESPs up to design levels (99%) by restoration of worn-out construction elements and by additional usage of special impulse current feeding for the filters,
- installing on all ash collectors stationary instruments for continuous control for dust content in flue gases,
- providing reduction of NO_x emissions at first up to 700 mg/nm^3, then up to 600 mg/nm^3, by installation of special burners to all boilers and by implementation of tertiary air blow

Reduction of total emission of sulfur dioxide is planned for the far future, by building by 2013 desulfurization plants, which will allow to reduce emissions up to 200 mg/nm^3, in all on a few energetic blocks

A cycle of measures on studying the problem of heat contamination of Irtysh river, where cooling water from condensers is discharged to, is done at the station, besides that, alternatives of its technical implementation are arranged too

The problem of dusting of ash disposal is also being solved

3 0 CHARACTERISTICS OF THE FACILITY EMISSIONS

3 1 Air emissions

3 1 1 Air emission sources

According to an inventory performed in April - May 1993, at Pavlodar oblast Department for Ecology and Bioresources, there are the following registered air pollution sources at the station

- 16 boilers of energetic blocks #1 to #8
- 5 boilers at starting boiler-room
- dry ash storage
- dump cars #3, 4
- coal storehouse
- mazut storehouse
- ash disposals #1, 2
- room of repair of beaters
- repair-construction room

For 1995 output of polluting substances in air amounted to 231 7 thousand tons The unaccounted emissions are made from

- sector of dry ash, where the dry ash is taken to storehouse by pneumatic transportation Pollution of air is caused by discharge of excess air from the tanks to atmosphere,
- room of woodworking, where there are 7 woodworking machine-tools Wooden wastes are taken to dust-collecting cyclone and then discharged to air,
- room of overlaying welding of beaters, where there are 4 semiautomatic welders for overlaying welding of coal grinders of hammer mills A system of localized aspirators for each semiautomatic welder allows to discharge all flue gases through fan to atmosphere,
- autogenous cutting and electric arc welding are mainly fulfilled inside main building Emission of harmful flue gases formed in these processes is made through aspiration cone Due to reconstruction activities on the energetic blocks it is planned in the future to increase consumption of welding electrodes and the number of autogenous cutting activities,
- all coal, received by the station, is unloaded to dump-cars and then is taken to coal storehouse The storehouse does not have selection for operating, reserve and long-storage coal but is considered to be completely operating because it plays role of an intermediate link This is caused by long interruptions in coal supply to the station The principal problems of dusting are caused by the stack slopes' not being properly rammed, coal from the railroad cars is not crushed These conditions are conducive to combustion of coal in the stack On spots of loading coal from vehicles to transporter there are aspiration plants but they do not operate continuously The dust coal, formed under unloading, transporting coal inside the storehouse and its storage, is discharged to air without being taken into account,
- under operation of diesel locomotives and bulldozers on approach ways and in storehouse, formed flue gases are discharged to air,
- ash and cinder collected in ESPs are taken to the ash disposals by wet transportation for storage

While drying certain parts of the disposals produce dust i e weathering of ash disposal surface takes place

Description of polluting sources, both accounted and not, is represented in Appendix 10 The principal ones of them are 16 accounted sources, boilers of the station, which discharge prevalent pollutions of such substances as fly ash, sulfur, nitrogen, carbon oxides etc , to air through ash collection equipment and then through three chimneys

The height of the chimneys is #1 - 180 m (blocks #1 and #2), #2 - 180 m (blocks #3 and #4), #3 - 250 m (blocks #5 - 8), height of starting boiler-room chimney is 30 m Other information on the chimneys are represented in Appendix 11

The station logs the emissions to air in annual reports 2TP-air, which are required by the Republic legislation Quantity and composition of these emissions are regulated by design standards, agreed with Ministry of Ecology and Bioresources, limits, which are prepared for the present region for a few years (see item 3 1 2) Data from reports for emissions for 1995 are represented in Appendix 12

Description of the basic elements of the equipment

Descriptions of all boilers, including such parameters as class of coal, fuel consumption, type of burner, time of putting a boiler into operation, worked time in hours until 1994, are represented in Appendix 13

Operating conditions of the boilers, including steam output, excess of air in the flue gases, temperature of the flue gases, heat losses, content of inflammable substances in the flue gases, being in a reserve, are represented in Appendix 14

Another information on the boilers, including scheme of burning, pressure and temperature of steam, temperature of feeding water and exhausted gases, efficiency of a boiler, scheme of NO^x emission reduction and data on blowing fans, are represented in Appendix 15

Cross-section of a boiler is shown in Appendix 16

Sewage treatment equipment

The treatment of flue gases from ash and suppression of nitrogen oxides production at Ermakovskaya power station are fulfilled by heat-engineering methods

Against design value of ash content of 40%, coal, used by the station, has ash content of near 50% and high electric resistance of the ash (up to 5 x 10^{13} Ohm x cm) Due to this there are considerable problems with ash collection

Flue gases, emitted by the boilers of blocks #1 - 8, are treated in ash collection units On the boilers 1A, 2A, 2B there are three-field ESPs with pre-included wet stage (scrubbers), on the boiler 1B there are scrubbers-spray- catchers and Venturis without ESPs, on blocks #3 - 8 there are ESPs of firm "LUK" (Germany)

In dry ash storehouse the hose filters SMC-101-A1 are installed to collect dust from discharged air after transporting of ash

Descriptions of ash collection units for treatment of flue gases, including such parameters as type of a unit, quantity of units per a boiler, sewage treatment efficiency, input and output concentrations, consumption of gases per unit, temperature of the gases, are represented in a table of Appendix 17

Descriptions of ESPs, additionally including dimensions, quantity of fields, height of electrodes, active cross-section of a filter, quantity of electrodes, temperature of gases, are represented in Appendix 18

Electrical parameters of load of fields of a ESP's are represented in Appendix 20

Structure of ESPs and their assembly drawings are represented on drawings in Appendix 19

Descriptions of wet scrubbers, including consumption of gases, temperature of gases at input/output, pressure, hydraulic resistance, percentage efficiency, dimensions of a scrubber, water consumption, way of ash pulp discharge as well as their efficiency jointly with three-field ESPs, are represented in Appendix 21 A schematic drawing of a scrubber and its method of attachment to an ESP are represented in Appendix 22

It should be specially noted that in these documents values of ash collection efficiency correspond to actual condition of the equipment

They indicate that values of efficiency of ESPs, at best, amount to 97% In addition, concentration of passed ash achieves value up to 2 g/nm^3 At the same time, design values for LUK ESPs are 99 5%, and for combined units 97 3% It should also be noted that such a poor efficiency of the operating ESPs is caused by two principal reasons first, considerable mechanical wear-and-tear,

456

and second, (not taken into account by the design), inappropriate electrophysical properties of the collected ash High content of silicon and aluminum oxides alongside with low content of sulfur in coal result in appearing in all ESPs phenomenon of so-called arc-back, which leads to decrease of ash collection efficiency In combined units with wet scrubbers the arc-back in ESPs is suppressed by temperature-moisture conditioning of the gases in the scrubbers However, the ESPs themselves operate under exceeded velocities of gas (up to 3 m/s), and besides that, they corrode due to transfer of spray from scrubbers As a result, their operating efficiency is about 92%

Nitrogen oxides

The content of this polluting substance, without special sewage treatment, is determined by class of fuel and method of its burning in a boiler Design equipment (type of boiler and type of burners) gave a level of NO_x amounting to 1000 - 1200 mg/nm^3 24 burners on each block are disposed in two tiers, 12 burners on each body of a boiler Their disposition is shown on a drawing in Appendix 16 At present, according to plans for NO_x emission reduction, new three-way burners were already installed on 5 boilers of the station, in such a way enabling to reduce concentration of NO_x up to 700 mg/nm^3 In addition, a trial system of putting so-called "tertiary air" had already been installed on one of the boilers, but was not tested yet, where additional air is blown through special injectors on the mark above upper tier to burn down intentionally enriched mixture, which is put through 2 tiers of burners This air is distributed out of total quantity of air to be burnt i e it is re-distribution without change of total coefficient of excess Portion of the air is about 6 - 10%

A drawing of the new three-way burner to reduce NO_x emissions is represented in Appendix 23

There is no desulfurization at the station Concentration of sulfur dioxide in the flue gases reaches 2100 mg/nm^3

All the turbine and largely boiler equipment of Ermakovskaya power station will soon achieve ultimate mechanical wear-and-tear i e age limit will expire To increase reliability and economic properties of the equipment the Program for equipping with enhanced equipment and reconstruction of Ermakovskaya power station up to 2018 is approved In addition, it is planned completely to replace the turbine equipment and ESPs with more up-to-date ones Duration of reconstruction of a block is 30 months

Due to lack of material and personnel resources, the reconstruction of the station will be made by stages, as follows

Block No	Years
2	1994 - 1996
3	1998 - 2000
4	2001 - 2003
1	2004 - 2006
5	2007 - 2009
6	2010 - 2012
7	2013 - 2015
8	2016 - 2018

Operative design "Equipping energetic block #2 with enhanced technologies" had been ecologically expertised at Pavlodar oblast Department for Ecology and Bioresources and agreed by letter #7/463 of June, 7, 1993

3 1 2 Emission Limits

In accordance with the acting Republic legislation for conditions of operation of Ermakovskaya power station, while taking into account rules and standards for harmful substances emissions in air, outside institutions had arranged a design of emission limits In this design there is a list of measures to comply with requirements for nature protection At present, this document is revised to be later submitted to oblast Department for Ecology and Bioresources to be agreed upon Due to this reason, Ermakovskaya power station does not have permission to discharge harmful emissions in 1996 The values of the design standards of emissions, calculated for 1995 - 1998 are represented in Appendix 24 Because the design is not agreed upon and there was no permission for harmful emissions also for 1995, then the shown figures are approximate only The results of actual measurements are represented in Appendix 25

Analysis of the submitted materials shows that actual concentrations of NO_x reach 800 mg/nm^3, output per second 1402 g/s Calculated limits are 500 mg/nm^3 and 1068 g/s, respectively The actual concentrations of fly ash in flue gases amount to 2100 mg/nm^3 and correspond to ash collection efficiency of 96 5 - 97 2%, output per second 4670 g/s Calculated limits are 1400 mg/nm^3 and 3217 g/s, respectively

As for sulfur dioxide, the actual concentrations reach 1400 mg/nm^3 , i e they exceed the calculated limit, 800 mg/nm^3, and output per second of 3065 g/s - at calculated limit of 1595 g/s (The results seem to be low and require to be made more precise on the next stage of the work) Therefore, the actual concentrations for all components in flue gases exceed the calculated limits, which provide keeping requirements of nature protection legislation of Kazakstan Comparison of the concentrations of polluting substances in flue gases with emission limits, determined by World Bank (ash 50 mg/nm^3, NO_x 730 mg/nm^3, SO_2 100 tons a day), indicates that they exceed these requirements for all parameters

The actual and calculated annual emissions are represented in following Table

Actual annual emissions, tons per year			
Year	NO_x	SO_2	Ash
1993	31336	98953	106065
1994	26678	86691	103184
1995	26314	85119	100271
Calculated annual emission limit, tons per year			
2088		46938	46968

Concentration of harmful substances in flue gases and maximum output per second are represented on the basis of the instrument measurements Total (annual) emissions are represented on the basis of calculation, according to RD 34 02 305-90 Graphs of check measurements for NO_x and SO_2 are represented in Appendix 24 Sulphur and nitrogen oxides are measured by certified instruments of type "Evdiometer" Concentrations of ash at input of ash collector are determined with calculation according to quality and quantity of fuel and operation conditions of a boiler The ash collection efficiency is determined by direct measurements with use of dust-sampling pipe with filters of cloth, once or twice a year The results of the measurements are represented in Appendix 26

Measurement of the emissions is made both for single boilers, connected to certain chimney for which the design standard of emission is determined and for the whole power station Calculation of total emissions for a month is made with use of the following parameters

- fuel consumption, according to data from calculating group of the planning-technical department
- ash content, sulfur content, heat of combustion of the fuel (on an average for a month), according to data from chemical laboratory or according to certificates, passports of the fuel,
- average monthly operation load of boilers and other parameters of their operation, according to accountability of type 3-tekh (energo)

Calculation of maximum emissions for a month is made with use of the following parameters

- maximum daily consumption by the most polluting substance by a group of boilers, connected to a chimney,
- the other parameters, as it is made under determination of total emissions, but averaged for the shortest period, including a day, when there was maximum fuel consumption

At the power station the log-books, according to determined form, are kept

The legislation of the Republic of Kazakstan provides the following types of payments for environment pollution

- planned, for permitted and agreed quantities of emissions,
- overlimit, for exceeding the agreed quantities,
- penalties, for extraordinary emissions due to not taking agreed measures for emissions reduction

Besides that, in case of pollution without applicable permission, all the mass of the pollution is considered to be overlimit and payment for it is imposed proportionally An example of calculations of the planned payments for emissions, fulfilled by the station services for 1996, is represented in Appendix 27 As seen from this, the station intended to pay for air emissions only 137,044,434 tenges (about US$ 2 million), and for heat contamination of Irtysh river 21,319,480 tenges (about US$ 320 thousand) In preceding years the figures were almost similar It should also be noted that at present the station does not have the permissions agreed upon emission, and as a result, it is claimed for payment for overlimit emissions For instance, for the first half-year of 1995 this sum amounted to 76,435,227 tenges (about US$ 1 2 million), see Appendix ____

Management of Ermakovskaya power station, aware of these problems, related to violation of the requirements of nature protection legislation, has arranged a plan of measures to reduce air emissions

Reduction of ash emissions initially may be achieved by bringing ash collection equipment efficiency to the design values on all energetic blocks by 1998

The second stage is a reconstruction to bring the efficiency up to 99% At present, due to reconstruction of the burners there is possibility to reduce NO_x emission up to 700 mg/nm^3 Due to optimization of conditions of combustion and implementation of the tertiary blow it is planned to reduce NO_x emission up to 600 mg/nm^3 Detailed plan of the measures is presented in Appendix 27

<u>Emissions monitoring</u>

At present at the station periodical control fulfilled for emissions from each of the boilers on the following components in flue gases oxygen, fly ash, sulfur dioxide, nitrogen and carbon oxides

Besides that, there is a control for the supplied coal and mazut for heat of combustion, ash content and sulfur content

Available instruments and industrial methodics of measurement allow to make determination of the abovementioned gaseous components with periodicity from a month to twice a year

Besides that, at the station there is a control for keeping sanitary standards for air pollution on working place and on the territory of site of the station This control is performed by laboratory of chemical room with use of chemical methods of measurement

Such an organization, in principle, does not contradict to the requirements of the republic standards However, it does not correspond to the requirements of international institutions on continuous measurements with automatic registration of the results
It should also be noted that at the station there is an understanding of necessity to provide the continuous control for levels of emissions In the near future stationary automatic instruments for measuring of oxygen, sulfur and nitrogen oxides contents should be installed to do this, in particular, with help of company Burns & Roe The next year it is expected to equip all blocks with optical dust-meters, registering transparency of gases

3 2 Water supply and waste waters

3 2 1 Sources of Water supply

Principal source of water supply of all types for Ermakovskaya power station is Irtysh river
On site plan (Appendix 5) the dispositions of water intake constructions, supply and discharge canals, main buildings and constructions of the station, ash disposal and other objects are shown
Water from the river is taken by non-dam water intake and through two supply canals is put to the main building Length of the canals to the close-to-station center is #1 - 4035 m, #2 - 4212 m
The canals are ground, not reinforced, are combined within the close-to-station center Water from the canals is taken to the turbine condensers by two block pump plants through steel hydraulic pipelines with diameter of 1800 mm At each pump plant there are 8 pumps OP-5-110 with double-speed electric motors The warm water from the turbine condensers is discharged through steel pipes with diameter of 1800 mm into closed canals made of reinforced concrete, having cross-section of 4 2 by 3 0 m, and through siphon unit is discharged through open ground canal in stream of Stary Irtysh, from where it is drained in Irtysh river
Water from circulation pipelines of blocks ST #1, 2 is also taken for water chemical treatment, where it is processed by the scheme of three-stage desalination Special instruments count consumption of the water
Consumption of technical water is determined by summing up values of consumption of water, discharged to the canal, and determined by instruments, and consumption of water for the water chemical treatment
For drinking water supply the water is taken by watercourse intake unit out of the first supply canal upgrade and is brought to the block of pump plant of the first upgrade, and then is put to a block of water chemical treatment station where it is purified by the following scheme coagulation, filtration, disinfection with liquefied chlorine Purified and made harmless water is put to pipework for needs of users of all industrial center, with its enterprises (except for ferroalloys factory) and for housing complex An account for drinking water is made by two ultrasonic water meters
Balance scheme of water consumption and pipework, according to actual data for 1995, are represented in Appendix 28

3 2 2 Waste waters

Under operation of equipment at Ermakovskaya power station there are the following kinds of waste waters

- cooling waters of turbine condensers, regeneration and washing waters from boil-water conditioning units,
- water, polluted with oil products,
- discharge water after chemical cleaning of equipment,
- water after wet cleaning of fuel supply accommodations

Besides that, at the station there are wastes of storm water and sanitary water (with village of Aksu) At the station there is the sole drainage of waste waters in surface reservoir The cooling water from turbine condensers is drained in stream of Stary Irtysh and then in Irtysh river (Appendix 5)

The sanitary and industrial waste waters are put to sewage treatment equipment of the nearby Ermakovsky ferroalloys factory All the other waste waters, formed in technological processes, including waste water from boil-water conditioning units, which are neutralized by mixing of acid and alkaline waters and lime milk, are put into circulation system of wet transport of ash

Waste waters, formed in conditioning of drinking water at a block of filtration station, and containing suspended particles, are drained in a reservoir next door to the station Presence of the reservoir was not provided by the design of the station therefore Ermakovskaya power station received a prescript from Department for Ecology and Bioresources to stop draining water in the reservoir

Ermakovskaya power station takes measures to build a pipeline, which will be used to transport waste waters after a block of filtration station to system of wet transport of ash (see Plan of measures for environment protection for 1996)

3 2 3 Effluent Treatment

(???????)

Normative-legal requirements on protection of waters and conditions of usage of water at Ermakovskaya power station

In accordance with the acting legislation, Law of Natural Environment Protection in the Republic of Kazakstan, adopted in 1991, each user of natural resources is obliged to have a permission for special usage of natural resources, and quality of drainage (emission) must correspond to determined standards

In 1994 the enterprise had a permission for special usage of water as well as a permission for drainage (Appendices 29, 30)

For 1996 at Ermakovskaya power station there are no approved design standards of drainage, no permission for special usage of water and for drainage of the standardly clear waters

The enterprise, in accordance with Law of Natural Environment Protection in the Republic of Kazakstan, provides analytical control for quality of waste, surface, ground and underground waters in the zone of influence of Ermakovskaya power station

On the site plan (Appendix 5) there is a scheme of disposition of sampling spots for complex analysis

The control for quality of waste and cooling waters of Ermakovskaya power station as well as ground and underground waters, is performed in accordance with a schedule of laboratory control, agreed with Pavlodar oblast Department for Ecology and Bioresources and approved by Chief engineer of the station (Appendix 31)

Samples of drainage, waste and river waters are picked up once a month, of sanitary waters twice a month, and of ground and underground waters once a quarter of a year

Periodic observations for discharge plants, located on Irtysh river, are also performed by Pavlodar Department for hydrometeorology in accordance with the Republic program of observations

The used methods of analysis of water are as follows visual, gravimetric, volumetric and photometric analyses, and all of them are recommended for usage by Ministry of Ecology and Bioresources

Waste waters, put in stream of Stary Irtysh, are standard-clear They are obtained from the cooling system of turbines and do not bring any additional impurities in the reservoir, except for the heat contamination (Appendix 32)

261

In Appendix 33 there are data on the water temperature in supply and waste canals (old stream of Irtysh) for 1991 - 1993

Analysis of the table indicates that in the hottest month (July) temperature in the stream reached up to 32 5 - 34 2^{0}C This does not meet the standards, provided by Rules of Surface waters protection In accordance with these, summer water temperature as a result of discharge of waste waters must not be increased more than 3^{0}C comparatively with average monthly water temperature of the hottest month of a year for the past 10 years (for reservoirs of drinking and household usage)

For reservoirs of fishery usage water temperature must not be increased (comparatively with natural temperature of the reservoir) more than 5^{0}C with total growth of temperature no more than up to 20^{0}C in the summertime and up to 5^{0}C in winter for reservoirs where there are fishes of cold water (pink, etc) and no more than up to 28^{0}C in the summertime and up to 8^{0}C in winter in the other cases

The quality of discharged water as for temperature factor does not meet the requirements of World Bank either For instance, according to provisions of the latter, it is required that temperature after the mixing zone was at least 5^{0}C higher than temperature of obtained water and at least 3^{0}C higher if temperature of obtained water is higher than 28^{0}C

Because the heat emissions from Ermakovskaya power station exceed the design standards, specialized scientific and design institutions were engaged from 1976 until 1992 in studying the influence of heat contamination in the stream of Stary Irtysh according to the order of the station Alongside with this, alternative designs of decrease of temperature of waste waters were also arranged

Kazakh research institute of power engineering and Institute of Zoology of National Academy of Sciences of the Republic of Kazakstan have conducted complex studies on condition of the ichtyfauna and its environment, within the zone of immediate influence as well as outside of it according to route of transport of the heat contamination (see scheme in Appendix 36)

It was found that the increase of water temperature in the mixing zone gives negative effect to general toxicological conditions due to an increase of toxic properties of metals, polychlorbiphenyls, chlorous organic substances In discharge plants, located above city of Pavlodar, the quantity of microorganisms is the largest, in the mixing zone there is considerable organisms' dying out due to the temperature shock (thermal wedge) Quantity of the microflora sharply drops, lowering self-cleaning capability of the water and aggravates sanitary parameters of its quality A presence of high values of poly-index is noticed at almost all observation stations

Specialists of Krasnoyarsk research institute, having studied all previously conducted studies and on making additional observations, came to conclusion that the most successful alternative of all of the studied ones, is a water discharging construction, located on the spot of merging of waste canal with the stream It would allow to lower temperature of water, drained by the station, 5^{0}C, and as a result, the zone of "heat contamination" in the vicinity of city of Pavlodar would be within acceptable boundaries due to intensive mixing (Appendices)

One of the alternatives of making the requirements loose towards the heat contamination was discussed in 1988 at local executive authority bodies together with nature protection bodies of Pavlodar oblast

Because the stream of Stary Irtysh, 26 km long, does not have its own effluent and is formed solely by discharge of standard-clear waters from Ermakovskaya power station, then fish protection bodies have agreed upon that the stream is not of fishery importance but is a transit watercourse Under such an approach, keeping the hard restrictions on fishery usage of water would apply to the check discharge plants of Irtysh river itself

Because the stream of Stary Irtysh was later classified as of category of fishery usage of water, which is connected to fishery reservoir of I category, namely Irtysh river, then there appeared a necessity to put restrictions for the heat contamination

Ermakovskaya power station has prepared a design of standards for the present discharge (Appendix 37) However, this design, despite being temporarily agreed with sanitary supervising bodies (Appendix 38), nevertheless requires to be considerably revised towards the restrictions for the heat contamination and the preparation of plan of measures, and only after this it may be represented for final agreeing

3 3 Materials Handling and Storage

The requirements, regulating an order of disposition, putting to storehouse and storage of chemicals, oil products and other materials, are represented in the applicable construction standards and rules (CSR), agreed with the applicable National Standards and the Republic normative documents
In accordance with these documents, there are the concrete official instructions and order of work for personnel of applicable subdivisions, according to which, individuals responsible for safe storage, keeping the rules and design standards of expenditure must take special theoretical training, practical training and get appropriate permission to prevent accidents, emergency and to reduce likelihood of professional diseases Taking into account conditions of ecological safety, the station organized an account for the following materials

- fuel of all kinds (mazut, coal, liquefied gas),
- dangerous materials and waste,
- chemicals, toxic and harmful substances

Coal storehouse
The coal storehouse, with area of 26,000 sq m, is located on territory of industrial site of the station, parallel to railroad branch, and has the design height of stack up to 18 m, length of 260 m and width of 100 m, providing by that a capacity of 680 thousand tons, including 220 thousand tons for national reserve
The storehouse is intended to keep for a short time Ekibastuz coal of I and II groups of ash content
Delivery of coal is fulfilled in railroad cars Unloading is performed on territory of the storehouse, which is specially equipped with two rotor dump-cars with a capacity of 1300 tons/hour and with one side dump-car with a capacity of up to 900 tons/hour Coal supply is fulfilled by transporters, bulldozers and wheel scrapers
The area, intended for reception of commercial coal, has ground protecting waterproof covering and is equipped with a system of storm water sewerage On spots of transfer of coal to transporters there are two aspiration units Along perimeter of the storehouse there are fire-extinguishing engineering communications, equipped with signaling facility Delivery of coal is made unevenly, the received coal is of different quality and class During unloading of coal from railroad cars, it is not crushed and slopes of the stack are not rammed This gives rise to a problem of dusting and is conducive to burning of coal inside the stack
To resolve these problems at the station there is a complex of measures, which is already partially performed to achieve the necessary ecological and sanitary design standards (Appendix ___)

Mazut storehouse
At the station there are two specially equipped places to keep mazut for burners On one of them, located on territory of the station, there are three tanks for mazut with a capacity of 2,000 m^3 each
On the other, located outside territory of the station, there are four tanks with hard roof for mazut with a capacity of 10,000 m^3 each The tanks are heat-insulated

The mazut storehouse is equipped with mandatory complex of means for signaling and fire-extinguishing, testing instruments
The design capacity of the mazut storehouse is 70,000 m^3 annually
Mazut is transported to the station in railroad cistern-cars with a capacity of 60 m^3, the pumping-out is made next door to the railroad track on pump ground, which has covering of concrete with a system of water draining pipes and oil-trapping wells to collect, to use and to keep waste waters
The mazut tanks are disposed 1 2 m above ground surface The storage conditions are intended to overcome a range of outdoor temperatures from -30^{0}C to +70^{0}C
All tanks are equipped with pumps with a capacity of 130 m^3/hour each, which provide filling-up of all four tanks with a capacity of 10,000 m^3 each, for 75 hours and the three tanks with a capacity of 2000 tons for 15 hours
The filling is made from beneath
All tanks are equipped with vents of 450 mm diameter
A heat insulation of the tanks is made of slag cotton 100 mm thick with outside metal casing
The overall portion of mazut, used while starting combustion in the boilers, amounts to about 5% of total quantity of burnt fuel
In Appendix 6 there are some information on mazut consumption and its characteristics

Chemicals storehouses
At Ermakovskaya power station there are four depository tanks with a capacity of 65 m^3 for the sulfuric acid (H_2SO_4) and four depository tanks of the same capacity for the caustic (NaOH) They are disposed on sleepers
There are no embanking and fields of reinforced concrete, which are mandatory according to safety engineering Though there were no reported leakages of chemicals, nevertheless, the absence of the abovementioned means for limitation of spreading-about of the liquids from the depository tanks is a violation of standards of industrial designation
Aluminum sulphate is stored in two cells of wet storage These tanks are made of reinforced concrete and have capacities of 60 m^3 and 40 m^3
An annual consumption of the agents

H_2SO_4	1300 tons
NaOH	1000 tons
$Al_2(SO_4)_3$	560 tons

In construction of the depository tanks there are

- providing isolation from possible leakage to environment,
- usage of special materials both for the tanks themselves and for picking emergency leakage as well as for its transportation,
- usage of special units for filling, discharge and measuring of the chemicals,
- usage of units for picking and neutralization of leaked or sprinkled chemicals,
- continuous or periodic control for technical processes and for contaminations inside accommodations

Ash-cinder waste storehouse
The main kinds of wastes at Ermakovskaya power station are ash and cinder
As of 01 01 1996 there were near 73 million tons of ash and cinder on ash disposals of the station, from which 3 3 million tons were collected for 1995
An insignificant portion of the ash (about 18 thousand tons) was given to users to be used in construction To give the dry ash to users there is a system of pneumatic transportation and a depository for loading to railroad cars on one of the blocks

At present, ash disposal #2, which consists of two sections, is in operation Total capacity of the ash disposal is 29 million tons Removing of ash-cinder wastes to ash disposal is made by wet transportation of ash A scheme of outside wet transportation of ash and operating conditions of the system are represented in Appendix 39
Section #1, filled with the wastes, is a source of air pollution because the station did not take measures against dusting on the ash disposal, violating nature protection requirements
The ash disposal is also a source of pollution to underground waters because in samples of water from a network of wells for underground water sampling in the vicinity of the ash disposal there is high (over 1 5 mg/l) content of fluoride-ions, which are found in samples of underground waters near watercourse of Irtysh river as well
A plan of disposition of the wells for underground water sampling within ash disposal area is represented in Appendix 3 and data on chemical composition of water from the wells in Appendix 40 Besides ash-cinder wastes, at the station there are other kinds of wastes construction trash, household garbage as well as out-of-order electroluminescent lamps, containing mercury, which are collected to be re-processed An account on formation and removing of wastes is represented in Appendix 42

3 4 Oil-Filled Electrical and Hydraulic Equipment

(?????)

3 5 Asbestos

Asbestos is used at the station as a heat-insulating material According to planning-technical department, a consumption of asbestos for repairs is on an average about 2,000 tons a year During the repairs about 800 tons of used insulation are removed to a dump
There is no special instruction at the station on treatment of asbestos-containing materials There are no plans and measures for change of asbestos for other less harmful materials either

3 7 Contaminated Soil and Groundwater

As noticed before, at the station there are very large total emission of ash from chimneys and intensive dusting from ash disposal #2 Although values of emission of ash from chimneys and areal of its spreading are known, nonetheless, the quantity parameters of the ash emission from the ash disposal was not estimated yet In this case a considerable contamination of soil and ground waters may be expected far away from the station (for instance, for Ekibastuz Power station up to 80 km) However, there are no reliable data at the station on this matter
Now it can only by stated that Ermakovskaya power station has ordered a study on estimation of its influence upon environment, which is now fulfilled by specialized institution "KazEcoEskp"

4 0 SUMMARY OF ENVIRONMENTAL COMPLIANCE

4 1 Air emissions

The activity of the Ermakovskaya power station in the field of atmosphere air protection is regulated by the Law of Environment Protection of Kazakh SSR of 1991, by the Law of the Kazakh SSR "Concerning Protection of Air", by the National Standard 17 2 302-78 "Protection of Nature Atmosphere Rules of determination of acceptable emission of harmful substances by industrial enterprises" and other normative instruments and applicable branch industrial rules and standards

Due to mentioned before drawbacks in the ash collection systems the ash concentration at outlet of flue-gas pumps substantially exceeds the republic calculated standard of 1,475 mg/nm^3 vs 2,100 mg/nm^3

NO_x concentration in flue gases is also higher than calculated design standard, approved for 1995 It should be no more than 500 mg/nm^3, but actual value is near 800 mg/nm^3

The sulfur dioxide concentration according to local calculated limits is restricted by 800 mg/nm^3, but the actual value reaches 1400 mg/nm^3 (and more) or about 230 tons daily

There are no instruments to register air emissions automatically at Ermakovskaya power station

There were no sanctions for exceeding design standards of emissions from supervising organs because Ermakovskaya power station does not have permission, agreed with them, for emissions for 1996 Formerly in the same cases claims took place and the power station had paid penalties in amount of US$ 1 million

The comparison of data on concentration of polluting substances in flue gases of boilers with emission limits, determined by World Bank (ash 50 mg/nm^3, NO_x 730 mg/nm^3, SO_2 100 tons daily), also indicates considerable exceeding the standards

Ermakovskaya power station has a plan to make air emissions meet the design standards

To reduce ash emissions it is planned to re-construct ash collectors wet stages with ESPs on blocks #1 and #2 and ESPs on blocks #3 - 8

The nitrogen oxides emissions are intended to be lowered to standard by changing burners and implementation of stage combustion of fuel on all blocks

There are no plans on reducing sulfur dioxide emissions until 2018

4 2 Water Supply and Liquid Effluents

Ermakovskaya power station is a large user of water on Irtysh river In 1995 1,693 million m^3 of fresh water were taken to industrial needs and 4,100 million m^3 to sanitary ones

1,689 million m^3 of water were used as a coolant for the turbine condensers

The cooling water from the turbine condensers is discharged through special canal and old watercourse of Irtysh river to present Irtysh river near public beach of city of Pavlodar and is the only outlet of waste water in the river The other waste waters, formed in various technological processes at Ermakovskaya power station are directed in ash collection system and after treatment are returned to the station as feeding water for the same technological system

Sanitary waste water is transferred to station of biological treatment and to Ermakovsky ferroalloys factory

The usage of water at Ermakovskaya power station is done with a number of violations of Law of Environment Protection, Rules of Protection of surface waters and other documents The enterprise does not have the permission for special usage of water (by official reason - there were no tests of fish-protecting constructions on pump plant) There are no design standards of emissions for polluting substances in basin with cooling water for turbine condensers

But the most substantial facts are the heat contamination of Irtysh river by drainage of cooling water in old watercourse of Irtysh river as well as a presence of higher content of polluting substances (fluorides) in underground waters as a result of penetration of water through bottom of the ash disposal

In the problem of heat contamination the key difficulty is the statute of the watercourse of Stary Irtysh where standard-clear water is discharged Documents for different years, agreed with oblast authority as well as conclusions of fish protection bodies confuse whether it is a water flow of industrial or sanitary use

In addition, on results of studies and information from supervising bodies the temperature of the cooling water in waste canal reaches 32 - 34^{0}C and on hot summer days, water going to Irtysh river, is not cooled at all

The republic limits an increase of temperature within 500 m mixing zone must be not higher than 5^0C comparatively with natural temperature, total warming-up must be not higher than up to 28^0C in the summertime

The international limits warming-up must not exceed 5^0C or 3^0C if obtained water is $\geq 28^0C$

Thus if supposing Stary Irtysh as fishery reservoir, in the summertime there is an exceeding both standards 4 - 6^0C and 1 - 3^0C respectively The same is observed on hot summer days in 500 m mixing zone in Irtysh river itself, when the background temperature in Irtysh reaches 26^0C In case of a cool summer the exceeding takes place in Stary Irtysh and does not in 500 m zone in Irtysh

In winter the limits are violated too the republic ones - total warming-up must be no more than 8^0C, the international ones - no more than 5^0C The station warms original water to 8-10^0C over background temperature of 2-4^0C

Due to the heat contamination, bodies of Ministry of Ecology and Bioresources have often presented claims At present the station is presented penalties for the heat contamination of water

Fluoride content in certain samples of the underground waters, taken from a network of observation wells in the area of ash disposal and in near watercourse of Irtysh river, is 1 5 to twice as much as standards, determined for basins of sanitary and drinking usage

By now Ermakovskaya power station is not presented any sanctions from the ecological bodies for the mentioned violations

A prescript from Department for Ecology concerned with cease of waste water draining from filtration station block into the basin, which is a hollow of ground forms near the station itself, is performed In 1996 it is planned to complete construction of pipeline from the filtration station block to the closed-circuit system of wet transport of ash

4 3 Materials Handling and Storage

The organization of receipt and storage of coal and mazut does not seem to be dangerous in respect of environment pollution except for periodic dusting of coal storehouse, not noticed by ecological institutions Nonetheless, at the station the measures are taken to stop dusting in coal storehouse

Dangerous and harmless waste

At present, the problem of dusting from dried places of wet ash disposal begins developing These places, as a rule, are far away from beaches Due to big distances and size of the ash disposal it is impossible to construct a system of its irrigation

Emergency plans

"Measures on decrease of polluting substances emissions in air in period of poor weather" are enclosed (Appendix #43)

5 0 CONCLUSION

Air protection

At Ermakovskaya power station there are problems concerned with violation of environment protection legislation of the Republic of Kazakstan and requirements of World Bank, shown in the exceeding of determined limits for emissions

On ash emission

- in ESPs of type LUK there is no designed protection against arc-back, therefore they are principally not capable of providing efficiency higher than 97 5% on ash of Ekibastuz coal, in addition, they are mechanically completely worn-out,
- in the combined ash collectors on blocks #1 and #2 the arc-back is suppressed, however, type size of ESPs was chosen wrongly and as a result, they operate under velocities of gas near three

times as many as design standard ones The wet stage does not provide effective reduction of ash load for ESPs, is unreliable, and operates with poor spray-catching efficiency, resulting in fast corrosion of ESPs, therefore their operational efficiency amounts to about 92%,

- on the operating ash disposal there are no moisturization of the ash beaches and their reinforcement with clay, resulting in considerable dusting from the ash disposal, the local authority did not present claims towards this,
- at the station there is no continuous registration of flue gases transparency

On NO_x and SO_2 emissions

- the actual level of SO_2 amounts to about 1400 mg/nm^3 (i e about 230 tons a day), exceeding requirements of the republic and international limits Desulfurization equipment is absent but it is expected to install it on a few blocks by 2018,
- the actual level of NO_x amounts to about 700 mg/nm^3 - 1200 mg/nm^3 for different blocks

Achievement of the design standards is made by implementation of heat-engineering measures on all boilers

Water resources protection

At Ermakovskaya power station there are problems related to necessity to keep the requirements of Law of Environment protection, Rules of protection of surface waters from pollution and other normative acts

it is necessary to make routine of getting the permission for special usage of water (permission for intaking from a water source) and discharge of cooling water in Irtysh river meet the requirements of legislation

The control for quality and quantity of fresh water taken from a water source and water, discharged to it, is fulfilled in accordance with the applicable rules

However, biotesting, which allows to reflect whole estimation of quality of discharged cooling waters, is not performed, despite the present problem of their temperature contamination

Besides that, there is potential possibility of pollution of water in Irtysh river by ground waters and filtration waters from ash disposal

To reflect certain conditions of the pollutions, observations are made by a network of control wells in area of the ash disposal and near watercourse of Irtysh river

Specialized institution KazEcoEksp performs a complex estimation of the influence of Ermakovskaya power station's ash disposal upon environment

All waste waters obtained under various technological processes regenerated and washing waters from water chemical treatment, waters with mazut and oils from cooling of equipment and heating of mazut, storm waters etc , are collected in a system of wet transport of ash

Negative effects of the ash disposal upon chemical composition of water in Irtysh river were not noticed yet However, as mentioned above, there is a necessity to keep an eye for this process

Sanitary waste waters of the station and town of Aksu are transferred to sewage treatment plants of Ermakovsky ferroalloys factory, according to a plan, adopted on contract basis

Solid waste

Treatment of solid waste at Ermakovskaya power station is regulated by Law of environment protection and a number of rules

The permissions for storage of ash-cinder waste for 1996 had not been gotten by the beginning of the present audit The storage is made on ash disposal, ash-cinder wastes are brought there by wet transport of ash with use of bugger pumps through pulp lines

As for environment protection, under storage of the waste there is a problem of dusting from surface of the ash disposal because measures on suppression of the dusting are not taken

The abovementioned fact is a violation of requirements of nature protection though oblast ecology supervising bodies did not present claims for it

An activity of the station on picking of out-of-order electroluminescent lamps for their demercurization meets the requirements

Company's policy in air protection

Management of the station planned and takes steps to provide automatic observation for SO_x, NO_x, CO_x and fly ash emissions As for flue gases the plans provide installation of foreign measuring instruments and for fly ash domestic measuring instruments

There are plans, which are now implemented, to re-construct the ash collection equipment For instance, on two first blocks #2 and #3 it is planned to mount new domestic ESPs and for blocks #4 - 8 the designs are not completely prepared yet and a supplier of the new filters is still not defined

As for decrease of NO_x emissions, the plans provide implementation of measures of heat-engineering, worked out by domestic research institutions jointly with Russian factory, manufacturing burners (Podolsky factory)

A decrease of SO_x emissions is planned in the far future only, year of 2018 (by equipping some blocks with desulfurization units) There are no virtual activities in this direction Supplier is not defined

Company's policy in water resources protection

Ermakovskaya power station takes steps to stop violating the environment protection legislation

To get the permissions for special usage of water, consultations are made with Pavlodar oblast Department for Ecology and Bioresources and with other interested organizations in respect of getting the acts of check tests of fish-protecting constructions, agreeing of design of standards of emissions

Towards protection against heat contamination of water in water source due to drainage of cooling water of turbine condensers, by order of Ermakovskaya power station competent organizations Krasnoyarsk division of research institute of power engineering worked out technical steps reducing degree of heat contamination of Irtysh river up to limits (28^0C)

The efforts of management of Ermakovskaya power station are directed to search for financing to fulfil the respective activities

The observations for quality of water in Irtysh river do not show its noticeable pollution due to drainage of underground waters from the ash disposal To get objective information on influence of ash disposal upon pollution in the water source, Ermakovskaya power station continues controlling chemical composition of underground waters in the territory of the ash disposal and watercourse of Irtysh river

There is a plan on protection and rational use of natural resources for 1996 at the enterprise, agreed with Pavlodar oblast Department for Ecology and Bioresources and approved by Chief Engineer of the station (Appendix 44)

6 0 RECOMMENDATIONS FOR MITIGATION & REMEDIATION OF EMISSIONS

6 1 Air Pollution

To keep the requirements of World Bank on monitoring, obtaining the continuous and reliable information on air emissions and comparing them with limits, it is necessary to implement at the station the instruments for permanent registration of concentration of the following matters in flue gases carbon, sulfur and nitrogen oxides as well as ash, which can be registered by measuring transparency of the flue gases

The expenditures for equipping a block will amount to about US$ 100 thousand

To make emissions of Ermakovskaya power station meet the requirements of both the republic and the international limits it is proposed to realize the following measures on operating boilers

• nitrogen oxides, implementation of the stage combustion with installation of new burners with lowered nitrogen oxides production and implementation of tertiary blow to achieve NO_x concentration of 550 mg/nm^3,
The cost of the burners is near US$ 240 thousand per a block,
• ash, to achieve the requirements of the republic legislation
on blocks #1 and #2 the design provides a change of the operating combined ash collectors (scrubber + ESP) for five-field ESPs with impulse current feeding and with cooling of flue gases up to 100^{0}C by boiler means (emissions ~ 100 mg/nm^3),
on blocks #3 - 5, according to the design of the enterprise, a change of ESPs for new ones, of five-field with impulse current feeding (emissions ~ 400 mg/nm^3), the cost is near US$ 5 million per a block,
on blocks # 5 - 8, according to the design of the enterprise, a capital repair of ESPs while changing electrode systems and installing special impulse feeding attachments (emissions ~ 400 mg/nm^3), the cost per a block is near US$ 1 million to change electrodes and near US$ 0 3 million to add the attachments
To reach limits of World Bank the following steps are proposed
• on hard particles (50 mg/nm^3), it is necessary to re-construct ESPs through one of the ways with usage of advanced foreign technologies,
• setting ESPs free from the electrode systems, followed by installation of hose filters inside them
The cost will amount to US$ 35 per one kWt i e about US$ 10 million per a block,
• installation of new five-field ESPs with usage of the sulfuric acid conditioning of the flue gases
The cost will amount to US$ 64 per kWt i e about US$ 18 million per a block,
• on sulfur oxides (100 tons a day at the design standard of 50 mg/nm^3), it is necessary to put into operation the dry technologies with usage of lime, having efficiency of 60 - 65% The cost of such technologies is about US$ 250 per a ton to reduce emissions (The Republic limits require the emissions to be reduced from 1400 mg/nm^3 up to 800 mg/nm^3 i e 40%, to do this, the simplified foreign technologies with usage of the dry desulfurization with adding limestone, having efficiency of 35 - 40%, may be used Their cost is about US$ 150 per a ton of sulfur dioxide)
To prevent a dusting of the ash disposal, it is recommended to use the design measure, which is applied at Ekibastuzskaya power station #2, suggesting an addition of 10 - 15% of sandy clay (of mass of pulp) in the ash pipeline with usage of the hydraulic excavator
Management of the station should take steps to restore aspiration units on places of pouring of track of fuel supply and to put them into operation

6 2 Water Pollution

The performed audit of Ermakovskaya power station has shown that to obtain the objective and reliable information on emissions of the station, it is necessary to implement the systems of automatic controlling and methods of whole toxicological condition of waste waters and surface waters
To get a precise answer on how much the degree of influence of heat contamination upon ichtyfauna of the stream Stary Irtysh and Irtysh itself is, it is necessary to provide biological monitoring with usage of biological testing method This would allow to make the whole toxicological estimation of quality of waste waters and a water source by the objective and mandatory method, which is a National Standard (ST RK 17 1 4 01-95) Besides that, by using "Temporary methodical recommendations on determination of a damage to a water source by results of biological testing", approved by Minister of Ecology and Bioresources in 1995, an

enterprise could itself reliably estimate the damage to nature This would be useful while comparing expenditures for the nature protection measures with the actual damage to nature
The station must take the following steps on keeping the requirements of the nature protection legislation of the Republic of Kazakstan in shortest terms

- to get the permission for special usage of water and for discharge of waste waters,
- to approve jointly with supervising ecological bodies, the statute of the reservoir for standard-clear waters from the station and while taking it into account to correct, to agree and to approve the limit of emission,
- to determine the limits for industrial wastes and to get the permission for their storage

The present plan of measures on protection and rational usage of water resources should be corrected according to the abovementioned steps and their costs should be made more precise

Burns and Roe Enterprises, Inc

Technical Report

KAZAKSTAN REGIONAL ENVIRONMENTAL IMPROVEMENT STUDY

REGIONAL POWER PLANT SURVEY

UST-KAMENOGORSK POWER STATION

FINAL REPORT

December 1996

Prepared by	Local Kazakstan Specialists and Burns and Roe Enterprises, Inc
Submitted to	U S Agency for International Developmentand The Government of Kazakstan
Contract No	CAN-0002-Q-00-3154-00 Regional Environmental Improvement Study Delivery Order No 9, Task 4

REGIONAL SURVEY REPORT

Table Of Contents

Executive Summary

1 0 INTRODUCTION 1

1 1 Background 1
1 2 Facility Operations 2

2 3 THE FACILITY 2

2 4 Location 2
2 5 History and Environmental Setting 3
2 6 Facility Description 3
2 7 Environmental Management Structure 3

3 0 CHARACTERISTICS OF FACILITY EMISSIONS 5

3 1 Air Emissions 5
3 1 1 Emissions Sources 5
3 1 2 Emissions Limits 7

3 2 Water Supply and Liquid Waste Effluents 8
3 2 3 Sources of Water Supply 8
3 2 4 Liquid Effluents 8
3 2 5 Effluent Treatment 10

3 6 Materials Handling and Storage 12
3 3 7 Storage of Chemicals 12
3 3 8 Storage of Mazut 12
3 3 9 Storage of Fly Ash and Bottom Ash 13

3 10 Oil-Filled Electrical and Hydraulic Equipment 14
3 11 Asbestos 14
3 6 Contaminated Soil and Groundwater 14

4 0 SUMMARY OF ENVIRONMENTAL COMPLIANCE 15

4 1 Air Emissions 15
4 2 Water Supply and Liquid Effluents 15
4 3 Materials Handling and Storage 15
4 4 Contaminated Soil and Groundwater 15

5 0 CONCLUSION 15

6 0 RECOMMENDATIONS FOR MITIGATION & REMEDIATION OF EMISSIONS 16

6 1 Air Pollution 16
6 2 Water Pollution 16

Appendices

Appendix 1 The city Ust-Êamenogorsk site card - circuit
Appendix 2 The Ust-Kamenogorsk power station general plan
Appendix 3 Electricity and heat energy production at the Ust-Kamenogorsk power station in 1983-1993 years
Appendix 4 Configuration of the main case A cut I-I
Appendix 5 Configuration of the main case The plan
Appendix 6 A longitudinal cut of the boiler BKZ-320-140-
Appendix 7 The air-protection measures plan of the Ust-Kamenogorsk Power Station for 1996
Appendix 8 The parameters table of the Ust-Kamenogorsk Power Station (1994-1995)
Appendix 9 The air emissions table
Appendix 10 Coal quality of the Karaganda and Êuznets pools mines
Appendix 11 The permission of polluting substances discharge in atmosphere for stationary sources
Appendix 12 The table of air emissions
Appendix 13 The plan - schedule of testing for air emission sources and on control points of Ust-Kamenogorsk Power Station for 1996
Appendix 14 The report of water using for 1995
Appendix 15 The scheme of waste water discharges to water objects at the Ust-Kamenogorsk Power Station
Appendix 16 ?????
Appendix 17 The substance allowed discharge limits, acting in water object with the enterprise waste water
Appendix 18 The schedule of laboratory testing of waste water quality for 1996
Appendix 19 The water-protection measures plan of the Ust-Kamenogorsk Power Station for 1996
Appendix 20 Waste water discharges and their influence to water sources as of 01 01 1996 years
Appendix 21 The chemical analyses of water samplings, taken on the "Ash disposal" site of Ust-Kamenogorsk Power Station
Appendix 22 Hydrocarbons Emissions for Mazut Storage

1 0 INTRODUCTION

1 1 Background

The Ust-Kamenogorsk Power Station is located in eastern Kazakstan, in the East Kazakstan oblast The facility mailing address is

Promyshlennaya Street #2, 492014
City of Ust-Kamenogorsk
Republic of Kazakstan

The Director of the station is Vladimir Kholyavin (telephone 47-28-42)

TheChief Engineer is Vladimir Ney (telephone 47-28-43)

The following key plant staff , along with various reprsentatives of the Chemical/Analytical staff, were involved in the facility audit

Sergey Matveev - Assistant Chief Engineer
Nina Zheleznyakova - Chief of Environmental Department
Valentina Kaynazarova - Chief of Technical Department

A meeting was also held with reprsentatives of the East Kazakstann Regional Ecology Department regarding regional ecological issues involving the Ust-Kamenorgorsk facility

The audit team was comprised of the following members

Burns and Roe Company

- John Doyle - Principal Mechanical Engineer
- David Cooksley - Environmental Engineer
- Gennady Doroshin - Leading Power Plant Specialist of the Kazakstan Scientific Research Institute of Power Engineering

Local Kazakstan Specialists

- Alexander Pescherov - Senior Specialist at Kazakstanenergo
- Ludmila Ljashenko - Head of the Ministry of Ecology and Bioresources Scientific Research Department for Ecology Problems
- Rafail Akhmetov - Chief of the Ecology Department at Kazakstanergo
- Mikhail Hojatelev - Leading Scientific Specialist at the Kazakstan Scientific Research Institute of Power Engineering
- Gennady Kropochev - Chief of the Testing Department at Ekibastuz Power Plant No 2
- Alexander Parucimov - Leading Specialist at the Almaty Ecology and Bioresources Department

This environmental audit was performed as part of a regional survey of power plants performed as part of a USAID funded "Regional Environmental Improvement Study" of environmental problems within the power sector of Kazakstan This study, along with the related audits, was directed by Burns and Roe Company in cooperation with Kazakstanenergo and the Ministry of Ecology and Bioresources of Kazakstan The audit was performed in accordance with the guidelines of the European Bank for Reconstruction and Development as presented in their

275

document "Environmental and Health & Safety Standard Audit Report Format" The purpose of this audit was twofold The primary purpose of the audit, as part of the regional survey effort, was to characterize the current emission levels at the facilities investigated in order to develop recommendations for technology improvements which would be applicable to the power sector of Kazakstan In this regard, the Ekibastuz facility was chosen for audit since its emission problems are considered to be representative of those of the power sector in general The second purpose of performing the audit was to serve as an opportunity for the team of local specialists to apply the classroom training received earlier in the Study regarding how to perform an environmental audit and how to western technologies could be applied to mitigate current emissions problems

The audit was performed for gaseous, liquid, and solid emissions It assessed the current discharges and the conditions which generate them, the methods of reporting emission levels, the technology currently in place to deal with these emissions, and plans to reduce emission levels Available documentation, such as research reports, facility records, conclusions of committees, etc were analyzed

1 2 Facility Operations

The Ust-Kamenogorsk Power Station is a combined cycle station was commissioned in 1947 to supply electric power and district heating to the city Ust-Kamenogorsk The Plant was design to run on a heating time-table with 4300 to 5200 hours of operation per year

The Power Station works under the thermal consumption schedule Maximum power load of the station is on winter period
The basic consumers of a heat

- The Ust-Kamenogorsk lead-zinc factory,
- The Ulba metallurgical factory,
- Meat-packing factory,
- 75 % of inhabited fund of city Ust-Kamenogorsk

In 1995 it was produced 1003682 thousand kW-hour of electricity by the power station
Dynamics of the power manufacturing is represented in the Appendix 3

The boilers were designed to fire Kuznetsk basin high volatile bituminous coal, but the presently Kuznetsk coal is replaced to high volatile bituminous coal from the Shubarkul mine and Karaganda mines

The power station uses water from the Ulba river for turbine condenser cooling

Formed at burn coal ash-cinder wastes are stored on ash disposal, located near to inhabited sector

2 0 THE FACILITY

2 1 Location

The Ust-Kamenogorsk Power Station is located in the East Kazakhstan oblast of Republic Êazakhstan Its arrangement in feature of city Ust-Kamenogorsk entails the increased requirements to observance of nature protection legislation

276

The Ust-Kamenogorsk is oblast center with the population 380 thousand persons The site map - circuit of city Ust-Kamenogorsk with the showing of an industrial zone, inhabited sector, posts of supervision, beyond the scope of a sanitary-protective zone and other is represented in the Appendix 1

There are near to the power station such enterprises, as place

- Ulba metallurgical factory,
- Lead-zinc factory,
- Factory of silk fabrics,
- Factory "Ceramics" and other

2 2 History and Environmental Setting

By virtue of high industrial level, the city experiences difficulties because of strong pollution of atmospheric air, superficial and ground of waters, and also ground

In a zone of influence of the Ust-Kamenogorsk Power Station arable land, a recreation zones along the rivers Irtysh and Ulba and inhabited sector of city Ust-Kamenogorsk

Some days the concentration of NO_6 and SO_2 exceed limits in some times

2 3 Facility Description

The Ust-Kamenogorsk Power Station has thermal capacity 1060 Gcal/hour and electrical capacity 213 MWt The Power Station works under the thermal consumption schedule
The general plan of the Ust-Kamenogorsk Power Station is represented in the Appendix 2

At the Ust-Kamenogorsk Power Station there were established 15 boilers

The configuration of the main case is represented in the Appendix 4 and 5
The boilers ¹1-4 were demounted

The characteristic of operating boilers

- Boilers ¹5-10, as type CKTI-75-39F, manufactured by Barnaul Boiler Manufacturing Co The design parameters of these boilers are 75te/h steamflow each at 39at g pressure and 435 grad C temperature, 150grad C feedwater temperature to the economizer, 150 grad C airheater exit flue gas temperature and 90 7% boiler efficiency (LHV basis) The furnace has a dry bottom ash disposal system The indirect (pulverized coal storage) coal firing system consists of a single subatmospheric operating pressure ball mill per boiler These mills are model SBM 250/390 with an external static classifier, separating cyclone, pulverized coal storage bin with PC feeders, pulverized coal/primary air (PC/PA) conduit system, and a mill fan which is a combined exhaust/primary air fan Each boiler furnace has three swirl type horizontal PC burners in a single row, positioned in the front wall plus two start-up PC burners, one in each furnace sidewall The draft plant of each boiler consist of a single forced draft and induced draft fan All of the fans of each boiler are radial flow, centrifugal type, with electric motor drive Each boiler furnace has six tubewall sootblowers three in each sidewall Particulate emission control equipment consists of wet venturi type scrubbers, a single venturi and two scrubbers per boiler

- Boiler '11-14, as type BKZ-320-140, manufactured by Barnaul Boiler Manufacturing Co The design parameters of these boilers are 320 te/h steam flow each at 140 at abs pressure, and 555 grad C airheater exit fluegas temperature and 91 5% boiler efficiency (LHV basis) The boilers have balanced draft radiant furnaces with fully water cooled tubewalls, and tangent tubes with insulation and casing The furnace has a dry bottom ash disposal system The indirect (pulverized coal storage) coal firing system consists of two subatmospheric pressure ball mills per boiler These mills are model SBM 287/470 with an external static classifier, and separating cyclone Each boiler has a single, common pulverized coal storage bin with PC feeders Each boiler has two PC/PA conduit systems and two mill fans which are combined exhaust/primary air fans for conveying the PC/PA mixture to the burners Each boiler furnace has eight swirl type horizontal PC burners arranged in two rows of four and positioned in the furnace frontwall Each burner has a steam atomized mazut gun for start-up and combustion stabilization To eliminate NOx emission in the flue gas of boiler the furnace has the overfire air nozzles located above the main burners The draft plant of each boiler consists of two FD and ID fans Hot air recirculation from the final stage airheater air outlet into the FD fan suction side is used to protect the cold end of the tubular airheater from low temperature corrosion attack Particulate emission control equipment consists of four venturi wet scrubbers per boiler Longitudinal drawing of boiler BKZ-320-140-2 - in the Appendix 6
- Boiler '15, as type TPE-430/A, manufactured by Taganrog Machine Building Co The design parameters of this boiler are 500 te/h steamflow at 140 at abs pressure and 560 C temperature, 230 C feedwater temperature to the economizer, 130 C airheater exit (diluted) fluegas temperature and 90 5% boiler efficiency (LHV basis) The radiant furnace operates with a balanced draft and is constructed with fully water cooled tube-fin-tube welded (membrane) walls, insulation and lagging The furnace has a dry bottom ash disposal system The boiler has two vertical shaft rotary regenerative bi-sector airheaters (type RPV-68 Ljungstrom license) in counterflow with combustion air in upflow and fluegas in downflow Each rotor has three sectors, two hot and one cold The cold sector heating surface is enameled Hot air recirculation from after the airheater air side outlet is fed into the FD fan suction side and is used for airheater cold-end corrosion protection The rotor speed is 2 rpm, with an electric motor drive The economizer stages are positioned in the vertical rear convective pass and the two regenerative airheaters are positioned immediately below the economizer fluegas side exit

  The indirect (pulverized coal storage) coal firing system consists of two subatmospheric pressure ball mills per boiler, model SBM 320/570 Each of the mills has an external static (centrifugal) classifier, separating cyclone, and pulverized coal storage bin with PC feeder The two separating cyclones are cross-connected to the two pulverized coal storage bins Each bin has four PC feeders for a total of eight per boiler The coal drying medium is hot fluegas taken from the furnace frontwall, above the lower furnace horizontal exit plane by two high temperature fluegas ducts of stainless steel construction and discharging into each ball mill raw coal inlet side Classifier exit mixture temperature control is by cold fluegas recirculation, using a recirculating fan, with a fluegas tap-off downstream of the two ID fans and discharging into the hot fluegas-to-ball mills lines The boiler has two fluegas/PC conduit systems and two mill fans which are combined PC and fluegas mixture circulating/conveying fans (for conveying the fluegas/PC mixture to the burners) The boiler furnace has a total of eight "flat-flame" PC burners, four burners each in the front and rear furnace walls, arranged in single horizontal rows Heat input capacity of each burner is 46 5 MWt Each burner consists of two hot combustion (secondary) airducts with an included angle of 60 degrees, a pulverized coal/fluegas injector, a steam atomized mazut gun for ignition and load stabilization and a flame scanner Each mill fan also supplies vented fluegas plus evaporated coal moisture together with some carryover pulverized coal to four vent burner openings arranged in one of the furnace sidewalls with a total of eight vent burner openings per furnace

276

The draft plant of the boiler consists of two FD and three ID fans Particulate emission control equipment consists of five venturi wet scrubbers per boiler A water impounded bottom ash/slag hopper supported on the basement floor is installed below the furnace tube hopper Four combined electric motor driven screw conveyors/ash crushers are installed per bottom hopper for the removal of the bottom ash

3 0 CHARACTERISTICS OF FACILITY EMISSIONS

3 1 Air emissions

3 1 1 Emission Sources

Total number of emission sources - 18, including
organized - 8, unorganized - 10

Basic of them
- steam boilers,
- coal handling shop,
- coal storage,
- mazut storage and pump station,
- Joiner's shop,
- locomotive depot,
- coal handling points

The list of polluting substances, emitted by sources, is represented in the table

The list of polluting substances (1993)

The substance name	Limit mg/m^3	Danger class	Emission level, tons/year
Ash	0 5	3	7226 739
Sulfur dioxide	0 5	3	9441 444
Nitrogen dioxide	0 085	2	6991 823
Vanadium pentaoxide	0 02	1	1 445
Formaldehyde	0 035	2	3 074
Carbon oxide	5 0	4	1798 068
Arsenic	0 03	1	2 81
Benzapirin	0 000001	1	0 013373
Coal dust	0 5	3	18 079
Welding discharge	0 5	3	0 341
Manganese dioxide	0 01	2	0 027
Hydrogen fluoric	0 01	2	0 005
Hydrocarbon	200 0	4	7 325
Acid evaporation	0 3	2	0 0378
Oil evaporation	0 5	3	0 00042
Chromium oxide	0 0015	1	0 00085
Soot	0 15	3	0 0236
Lead	0 001	1	0 0000011
Wood dust	0 5	3	0 795
Abrasive dust	0 04	2	0 071
Silicon combinations	0 02	1	0 001

279

The boilers are equipped by ash collection systems the scrubbers with Venture pipe of on each Efficiency of ash collection - 96%, that is obviously insufficient

Some boilers are equipped with the experimental acoustic devices, raising efficiency of ash collection on 0 5 % (Appendix 7)
Total ash emissions were made 5 84 thousands tons in 1995(Appendix 8)

The nitrogen oxide elimination technologies comes true as follows

- On boilers ¹ 5, 8, 9 - is not present,
- On boilers ¹ 6, 11-14 - overfire air nozzles,
- On boilers ¹ 7, 10 - high concentration coal dust feed into furnace

Efficiency of nitrogen oxide elimination - 10 %
There was discharged by the power station 5 85 thousand tons of nitrogen oxides in 1995

There is no desulfurization technology at the station
There was discharged by the station 7 86 thousand tons of sulfur dioxide in 1995(Appendix 8)

The actual concentrations(mg/m^3) of harmful substances in flue gases of boilers are represented below

Boiler type	Ash, mg/m^3	NO_X, mg/m^3	SO_2, mg/m^3
CKTI-75	600	750	400
BKZ-320	1000	910	1000
TPE-430	1000	910	1000

For the last years there was the replacement of the design fuel - of Kuznets coal on Karaganda coal having the worse quality
Only the increasing of the sulfur content in coal from 0 35 % in 1987 till 0 48 % in 1993 has given SO_2 increasing from 7922 up to 9441 tons (Appendix 10)

The project of the power station emission limits had been developed, but was not coordinated in Regional Management of Ecology because of constantly shows additional conditions (not always indisputable)

For 1996 the preliminary conditional coordination on emission limit for the power station is available, and it is at the Ministry of Ecology and Bioresources of the Republic of Kazakhstan
The permission for the power station on the harmful emissions in atmosphere in 1996 is available (Appendix 11)

The conformed emission limits and actual emissions are represented in the Appendix 12

The data analysis shows

- Actual emissions of NO_X and SO_2 per second a little bit exceed the limits,
- At the same time, in 1994 actual second emissions there were below limits, that is inexplicable,
- for fly ash, on the contrary, significant excess of limit was shown in 1994

It is obvious, that at the following stage of work specification of results is required

The harmful substance concentration definition in atmosphere from sources and on control points of the station comes true both instrumental method and method of calculation

The detailed information is represented in the Appendix 13

3 1 2 Emission Limits

The law of atmospheric air protection of the Republic of Kazakhstan, with the purposes of restriction of harmful influence emissions of the industrial enterprises on atmospheric air, stipulates an establishment of the emission limits

At the moment for the industrial enterprises an establishment of allowable emission limits and temporarily coordinated annual emissions of harmful substances are stipulated

Under allowable emission limit (AEL)it is understood the technological standard, installed for a condition, that "the contents of polluting substances from a source in a lower layer of air or their sum should not exceed the air quality standard for the population, flora and fauna" (National Standards 17 2 1 04-77)

If for the operating enterprise the allowable emission limits (AEL) are exceeded, then the emission decreasing stages up to AEL meanings are entered For each stage it is established the temporarily coordinated emission standard of harmful substances(TCS)

By rules of an establishment of allowable emission limits (National Standards 17 2 3 02 -78) the limit concentration (LC) of harmful substances in atmospheric air, confirmed by Ministry of public health of Republic of Kazakhstan is admitted as basic standard of quality of air

Rules require, that a ratio should be carried out

$$\tilde{N} / LC \leq 1,$$

where C - settlement concentration of harmful substance in lower layer of atmosphere

As the lower concentration can form by set of emissions sources, at an establishment LAE for the given source take into account determined by account or experiment of meaning of background concentration $\tilde{N}_o$, therefore an above mentioned ratio represent as

$$(\tilde{N} + \tilde{N}_o) / LC \leq 1 \text{ , or } \tilde{N} + \tilde{N}_o \leq LC$$

At an establishment of the specifications AEL the maximum lower concentration of substance from the given source $\tilde{N}_1$ and meaning of background concentration $\tilde{N}_o$, created by other sources of emissions, are determined with use of mathematical model for scattering of gaseous and aerosol impurity in atmosphere

According to " ÎND-86 The technique of account of concentration in atmospheric air of harmful substances in emissions of the enterprises ", maximum lower concentration, referred to adverse meteorological conditions, and for hot sources, is determined under the formula

$$\tilde{N}_1 = AMFmn\eta / (H^2 \sqrt[3]{V_1 \ \Delta T}) \text{ , where}$$

I - height of a pipe, m,

I - expenditure of substance discharged to air, grams/second,
ΔO - difference between temperatures of discharged gases and air,
V_1 - the complete charge of flue gases from chimney, m^3/s,
F - factor for separation of hard particles (for gaseous substances F is 1),
A - climatic factor,
η - factor, taking into account relief,
M, n - factors, taking into account conditions of rise of a torch of the flue gases above chimney

With the help of this formula, and also ratio, allowing to determine $\tilde{N}_o$, determine a degree of conformity of emissions from the given source to represented earlier expression $C + \tilde{N}_o \leq LC$
In case of discrepancy it is established the flow of discharged substance I, satisfying to this ratio, which will be allowable emission limit(AEL)

The list of measures to decrease an emission level at the enterprise to the AEL and a realization schedule of measures is determined after AEL establishment

3 2 Water Supply and Liquid Waste Effluents

3 2 1 Sources of Water Supply

For technical needs the Ust-Kamenogorsk Power Station receives water from the river Ulba, and water for drinking needs - from a municipal waterpipe systems
The part of technical water taken away is transferred to the other consumers to the Ust-Kamenogorsk lead-zinc factory, research institute of nonferrous metallurgy and other

The technical water at the Ust-Kamenogorsk Power Station is used in the various technological circuits The greatest its amount is used in forward flow condenser cooling systems of turbines (84 %), system of wet ash transportation (13 %), feedwater treatment plant(3 %)

In 1995 for technical needs and transfer to other organizations was taken away 46 2 million m^3, and on drinking needs - 17 5 million m^3 of water (Appendix 14) For the Ust-Kamenogorsk Power Station needs it was used 42 75 million m^3 of water

3 2 2 Liquid Effluents

The Ust-Kamenogorsk Power Station has two waste water discharges
- In the river Ulba (turbine condenser cooling water discharge and neutralized waste water discharge of feedwater treatment plant)
- In the river Brajinskaya (waste water discharge from ash disposal)

On site map - circuit (Appendix 15) the locations of waste water discharges in reservoirs are shown

In the various technological circuits of power station the following liquid wastes are formed
- Waste water of forward flow ash transportation system,
- Cooling water of forward flow turbine condenser cooling systems,
- Waste water, containing petroleum (after cooling of auxiliaries in various shops, from mazut facilities,
- Acid and alkaline water of feedwater treatment plant,
- Waste water after equipment washings and preservation

Waste water, formed on feedwater treatment plant, after auxiliary mechanisms cooling and storm waste water are collected and directed together with cooling water to the river Ulba
The waste water from chemical cleaning of the equipment, from a mazut facilities (from mazut precipitation tank) are discharged in ash disposal

In 1995 in the river Ulba was discharged 32 3 million m^3 of normative-waste water, and in river Brajinskiy - 1 1 million m^3 of polluted waste water from ash disposal (Appendix)

The waste water sources of the Ust-Kamenogorsk Power Station and circuit of their removal, together with the reception places of waste waters of the other enterprises are specified on the Appendix 16 drawing

Norming-legal requirements on water guards and conditions of water using at the Ust-Kamenogorsk Power Station

The activity of the Ust-Kamenogorsk Power Station in area of water protection is adjusted "by the Law of the natural environment protection", "by the Water Code of the Republic of Êazakhstan", "by Rules of superficial water protection from pollution" and other normative documents

According to the requirements, stated in these documents, the Ust-Kamenogorsk Power Station has received the water using permission for 1996 and has the allowable discharge limits - (ADL) of polluting substances coordinated by Regional Management of Ecology and Bioresources, diagram of discharge waste water quality testing and plan of water protection measures for 1996 (Appendix 17-19)

The discharge waste water quality testing comes true by chemical laboratory, properly equipped and engaging qualified personnel The laboratory is confirmed by the local division of National Standard of the Republic of Êazakhstan and has a license to make the analyses of industrial water discharges

The waste water quality testing results and also river water(before and below of waste water discharge), are recorded in the special protocols and are fixed in magazines

The water discharge flow is determined by indications of devices in view of water balance of the separate technological circuits Devices for the direct determinations of the waste water flows is not available at the power station

Comparison of the allowable discharge limits of various substances with the actual discharges is showed in the Appendix 20

As it is visible from these data, the waste water discharges in the river Ulba is a cause of the ADL excess of chloride, sulfates and a common mineralization, for river Brajinskaya the list of substances, on which the ADL excess, includes also the row of components, among which - fluorides, vanadium, arsenic and other

The quality of water, discharged to the river Ulba from turbine condenser cooling systems together with earlier mentioned discharges, corresponds to the World Bank standards

In 1995 the requirement about paying 1 8 million tenge (about $10000) was presented to the Ust-Kamenogorsk power plant by Regional Management of Ecology and Bioresources for the ADL of polluting substances excess in the waste water discharges

Thermal pollution of water in the river Ulba during operation of the power station it was not marked However, accounts being available on station show, that at nominal loading in summer season the cooling water temperature would exceed the established standard
Actual loading of the station much less the nominal in summer season

The power station plans measures to solve the water protection problems

The design institutes developed measures to install the turnaround circuits of cooling water system and wet ash removal system, clearing of oil containing drains and industrial - storm water

The part of the design decisions is carried out

- Are constructed cooling towers and other elements of turnaround system of technical water supply,
- Under construction of ash disposal ¹4 ,
- Construction of ash disposal ¹3 earlier stopped is planned

Term of finishing of construction of turnaround technical water supply system - 2000, of ash disposal ¹4 - 2003
A list of other measures in Appendix 19

3 2 3 Effluent Treatment

From all waste water, formed by power station ,only acid and alkaline containing water of feedwater treatment plant and water polluted by oil of mazut facilities are exposed by treatment

The waste water of feedwater treatment plant are mixed up in special capacities with a solution ðI finishing up to 6 5 - 8 5
In a year it is processed up to 100 thousand m^3 of waste water

The water after oil precipitation tanks is directed to the wet ash transportation system Emulsion, containing oil, comes back on mazut facility

The conditions of waste water assignment in water objects are determined with the account

- Dissolution degree of waste water with water of water object on the distance from a discharge place of waste water up to the nearest of control point of water using,

- Calculated background structure and properties of water of water objects in places of waste water discharge

On the basis of calculations for each waste water discharge the allowable discharge limit (ADL) of polluting substances are established, the observance of which should supply normative quality of water in control points of water objects according to the requirements of Rules or the natural factors of structure and properties of water preservation

Allowable discharge limit(ADL) is a weight of substance in waste water, as much as possible allowable to assignment with an established mode in the given point of water object in time unit with the purpose of maintenance of water quality standard, and it represents product

$$ADL = \tilde{N} \quad Q$$

The ADL calculation was made according to " Rules of guards of superficial waters of the Republic of Êazakhstan", "The Instruction on emissions polluting substances norming in atmosphere and in water objects",

" Technique calculation of allowable discharge limits (ADL) of polluting substances in water objects of the Republic of Kazakhstan "

The requirement lays in a basis of calculation, according to which each water user should recognize that at waste water discharge it should be carried out following conditions in the nearest control point of water using

$$C^{i} \leq C^{i}, \quad i = 1, \quad l,$$

And moreover, at presence of substances 1-th and 2-th classes of danger with identical limiting attributes of harm, ADL is established at the rate of (National Standards 4638-88 " Sanitary rules and norms ", Ministry of Public Health USSR)

$$\sum \tilde{N} / C^{i} \leq 1, \quad \text{where}$$

C^{i} - limit concentration (LC),

l - amount of norming substances,

C^{i} - the concentration i-th of substance in control point under condition of waste water discharge by water user, and summation in the second inequality is made on all substances with identical limiting attributes of harm, which can be in water control point

The calculation of allowable concentration to discharge in water flows (except weighed substances) is made according to the formula of Frolov-Rodziller

$$\tilde{N}_{ño} \leq \gamma\, Q_{ð}\, (\tilde{N}_{iañ} - \tilde{N}_{o}) / q_{co} + \tilde{N}_{iae}, \qquad \text{where}$$

γ - factor of mixture, which shows, which part of water in the river is mixed up with waste waters, while it goes up to control point, located on distance L, km,

Q - the charge of water in the river, m^3/s,

q_{co} - the water discharge flow, m^3/s,

$\tilde{N}_{iae}$ - limit concentration of substance, mg/l,

$\tilde{N}_{o}$ - concentration of substance in background mg/l

The concentration of weighed substances pays off under the formula

$$\tilde{N}_{açà} = 0\ 25 \quad (1 + \gamma\, Q / q_{co}) + \tilde{N}_{o}$$

When allowable discharge limits is established, the calculated flow of discharge waters is accepted as the maximum waste water discharge per hour for actual period of this discharge depending from discharge duration and operation mode of the enterprise - waste waters emission source

285

At determination of the dissolution ratio of discharge waters by water of stream in control point of a water using, the following conditions are accepted

- For the noncontrol water streams - the calculated minimum monthly flow of water of a year with the 95% water providing,
- For the control water streams - the established guaranteed water flow below a dam

3 3 Materials Handling and Storage

3 3 1 Storage of Chemicals

Chemical reagents are used at feedwater treatment plant for water preparation for compensation of water losses at the power station and at the external consumers

The reception and storing of chemical reagents, acting by rail, are made according to the established requirements and norms of technological designing of thermal power stations (NTP-81) and other documents

The warning of an environment pollution at reception and storing of reagents is reached at the enterprise

- by maintenance of isolation of possible reagent straits with the weeding help, made from materials, steady against influence of aggressive means,
- by use of special devices for filling, discharge and proportioning of reagents

The list of chemical reagents, used at the enterprise, and some reagent storehouses(tanks) information are represented in the table

The annual flow of sulfuric acid is about 700 tons/years, sodium hydrate - about 350 tons/years Both reagents are used for regeneration of filters at feedwater treatment plant

The list of chemical reagents

The name of chemicals	Amount of tanks	Volume, m^3	Concentration, %
Sulfuric acid	4	On 30 each	92-93
Sodium hydrate	4	On 30 each	40-45
Hydrazine-hydrate	2	On 1 5 each	64
Ammonia	2	On 30 each	25

The hydrazine-hydrate is used to prevent internal pipe surface corrosion of boiler special means of protection are used by the personnel for work with it toxic reagent Measures for neutralization of hydrazine-hydrate chloric lime straits are stipulated

Thus, at reception and storing of chemical reagents at the enterprise an environment pollution does not occur

3 3 2 Storage of Mazut

At Ust-Kamenogorsk Power Station mazut use as additional fuel for furnace start-up and firing stabilization

The characteristic of mazut is represented in the table

286

The characteristic of fuel	Designation	Average meaning in a year
Ash content %	A	0 033
Sulfur content, %	S	0 95
LHV, ccal/kg	Q_1	9977

For mazut pumping, filling and discharge it from capacities, temperature of mazut should be not lower 60-70 °Ñ

Technological path of mazut preparation includes
- filling-discharge devices,
- the basic tanks with capacity 1000 i^3 - three tanks for storing of a constant mazut reserve,
- mazut pumping station,
- system of pipelines,
- mazut heaters and filters

The preparation of mazut before burning includes mazut filtration against mechanical impurity, mazut pressure increasing and it heating, that necessary to decrease energy losses for mazut transport and its thin pulverization in guns of burners

The hydrocarbon allocation at mazut storing is occurred at mazut discharge from railway cars, through the respiratory valves of mazut capacities and through pump looses
The account of hydrocarbons emissions is represented in the Appendix 22

3 3 3 Storage of Fly Ash and Bottom Ash

The removal of ash-cinder waste at Ust-Kamenogorsk Power Station is made by a hydraulic method

The storing of ash-cinder wastes is made on ash disposal The filling of ash disposal ¹1 was completed, surface of ash disposal is covered by grass and long-term plants The ash disposal ¹2 is under operation, though its design volume exhausted By escalating dams of ash disposal the operation life of ash disposal manages to be increased

At the moment both ash disposal are equipped by sprinkle devices for dust prevention
At ash disposal ¹1, already filled, surface of ash-cinder waste are covered by grass

The construction of ash disposal ¹3 is stopped because it was an unsuccessful choice of construction plant - near to a country file
Construction of ash disposal ¹4 is begun

Because a finance lack to finish ash disposal #4 construction the plans of ash disposal ¹3 construction are considered again

The problems with operation of ash disposal are connected, mainly, to necessity of water discharge from it in river Brajenskiy and further - in the river Irtysh, and also with ground water pollution in result filtration from ash disposal

3 4 Oil-Filled Electrical and Hydraulic Equipment

251

Transformer and turbine oils using can be connected to danger of an environment pollution by chemicals contained in them, added to improve operational properties of oils

Unfortunately, in the country until comes true of the programs on restriction of these chemical influence on an environment Therefore a data on amount of these chemicals at Ust-Kamenogorsk Power Station, and even about presence them in oils is not available

The personnel instructions to manipulate with oils, containing chemicals, are not developed

3 5 Asbestos

At the moment asbestos is used on all thermal power stations of Kazakhstan as a heat -insulation material

The programs to terminate asbestos using and also removal being available of containing asbestos insulation are not planned

3 6 Contaminated Soil and Groundwater

The soil pollution around of power station can be caused of polluting substances emission with flue gases of boiler, and also with ablation of a ash dust from ash disposal

The ash disposal of Ust-Kamenogorsk Power Station are not dust on fulfilled ash disposal the measures to prevent ash ablation are carried out (gardening, humidifying), and on operating ash disposal- the ashes is covered by a layer of water
Thus, the pollution of soil can be caused only by emission of polluting substances with flue gases

Special researches about influence of particulate emissions and gaseous substances on soil pollution was not carried out Therefore of data, allowing to judge about this process, is not available

Claims to Ust-Kamenogorsk Power Station on this occasion was not showed by environment protection bodies, carrying out the control for an environment condition,
Sources of ground water pollution are ash disposals at Ust-Kamenogorsk Power Station

In region of ash disposal a few wells are available, from which water sampling periodically are made to test water quality The results of chemical analyses of well ground water are represented in the Appendix 21

The data of the analyses testify that ash disposal not having of leakage protection, pollutes the ground water by fluoride and selenium The fluoride contents exceeds limit concentration, established for water of water objects of economic-drinking water using in 2-3 times and for selenium - in 24 times

Because there are not indicators on the fact, that the ground water pollution in ash disposal region influences on water quality in drinking water supply sources of city Ust-Kamenogorsk, any claims to the enterprise was not showed

4 0 SUMMARY OF ENVIORNMENTAL COMPLIANCE

4 1 Air emissions

The activity of the Ust-Kamenogorsk Power Station in the field of atmosphere air protection is regulated by the Law of Environment Protection of Kazakh SSR of 1991, by the Law of the Kazakh SSR "Concerning Protection of air", by the National Standard 17 2 3 02-78 "Protection of Nature Atmosphere Rules of determination of acceptable emission of harmful substances by industrial enterprises", and other normative instruments and applicable branch industrial rules and standards

4 2 Water Supply and Liquid Effluents

From the point of view of the environment protection legislation there are a few problems at Ust-Kamenogorsk Power Station in the field of water protection from pollution and rational their use, caused by of technological process peculiarities on station

- the forward flow turbine condenser cooling system, requiring significant volumes of water from the river Ulba (more of 80 % a total technical water consumption at the power station enterprise), should be replaced by turnaround cooling water system,

- the forward flow wet ash transportation system should be reconstructed in turnaround system with the purposes of the discontinuance of water pollution in the river Irtysh and rational use of water resources,

- Construction of water treatment plant to clean oil containing drains and industrial - storm water is required

The presence on the station the designs of turnaround technical water supply system and waste treatment plant, (already partially realized) testifies that the power plant has the correct policy in the field of water protection

4 3 Materials Handling and Storage

4 4 Contaminated Soil and Groundwater

5 0 CONCLUSION

The Ust-Kamenogorsk Power Station has serious infringements of the requirements of water object pollution prevention and rational water using legislation (presence of the forward flow circuit of turbine condenser water cooling system and wet ash transportation system, ash disposal water discharge in water object)

The technical designs for water protection and rational water using developed at the Ust-Kamenogorsk power station will allow, after their realization, a compliance of water using conditions at the station and the requirements of the republican norms of an environment protection

Constant escalating of dams of ash disposal '2 can bring dam break and boom of large weights of ash-cinder waste After end of operation of ash disposal '2 and its recultivation by a traditional way (the ash disposal surface coverings by a layer of ground), can proceed harmful element leakage from ash-cinder waste by rain deposits

In comparison, emissions of The power station SO_2 emission is 21 5 tons per day with the World Bank standards (100 tons per day) is much lower

The concentration of flue ash in the boiler flue gases much exceed the requirements of World Bank standard

The concentration of nitrogen oxides is also higher than the requirements of World Bank standard

The actual efficiency of ash and nitrogen oxides emission cleaning is insufficient to satisfy emission limits The measures were developed by the power station for achievement of emission limits, include reconstruction of ash collection system, implementation of low NOx technologies and also commissioning of new (180m height) stack The measures to eliminate sulfur dioxide emission are away (Appendix)

6 0 RECOMMENDATION FOR MITIGATION & REMEDIATION OF EMISSIONS

6 1 Air Pollution

The measures, stipulated in the Project to achieve of emission limits, as a whole solve the Ust-Kamenogork power station problems However, discussion about sulfur dioxide emission limit for the power plant with the Ministry of Ecology and Bioresources of the Republic of Kazakhstan and the Regional Ecology Committee is necessary

6 2 Water Pollution

For water resource protection it is offered

- To correct the allowable discharge limits(ADL), in connection with necessity of initial water quality parameters more accurate definition It can result in a payment reduction for polluted water discharges

- To estimate influence of ash disposal water leakage on underground water and superficial water source quality (at the following stage of work)

- By results of estimation of ash disposal ¹2 influence on an environment to provide recultivation method excluding leakage of harmful elements in ground water With the purpose of ash disposal ¹2 dam break exception to accelerate new ash disposal construction

Burns and Roe Enterprises, Inc

Technical Report

KAZAKSTAN REGIONAL ENVIRONMENTAL IMPROVEMENT STUDY

PROTOTYPE FACILITY TESTING PROGRAM

EKIBASTUZ POWER STATION N0 2

FINAL REPORT — DRAFT

December 1996

Prepared by	Burns and Roe Enterprises, Inc and Local Kazakstan Specialists
Submitted to	U S Agency for International Development The Government of Kazakstan
Contract No	CAN-0002-Q-00-3154-00 Regional Environmental Improvement Study Delivery Order No 9, Task 4

PROTOTYPE FACILITY TESTING PROGRAM

TABLE OF CONTENTS

1 INTRODUCTION AND OBJECTIVE

2 0 UNIT DESCRIPTION
2 1 Combustion Systems
2 2 Liquid Effluent Streams

3 0 FLUE GAS TESTING
3 1 Discussion
3 2 Testing Methods and Instrumentation
3 3 Unit Operating Data
3 4 Summary of Test Results

4 0 WATER TESTING
4 1 Discussion
4 2 Testing Equipment
4 3 Summary of Test Results

5 0 PROTOTYPE MODIFICATION PLAN

Appendices.

Appendix A - Summary of Test Regimes
Appendix B - Summary of Land Emissions Data
Appendix C - Graphical Analysis
Appendix D - Land Unit Printout Data
Appendix E - Land Unit Capture Program Output Data
Appendix F - Fuel Analysis
Appendix G - Unit Operating Data
Appendix H - Ash Collection Test Report
Appendix I - Information on Testing Equipment

1 0 INTRODUCTION AND OBJECTIVE

This report presents the results of the Testing Program conducted at the Ekibastuz Power Station No 2 in October/November 1996, as part of the Prototype Facility Investigation phase of the Kazakstan Regional Environmental Improvement Study (Delivery Order No 9, Task No 4) This Testing Program was conducted to collect detailed quantitative data on current air emissions and liquid discharges at the facility Air emission data was collected on flue gas streams from Unit #2 and #1 and an analysis was made of selected liquid effluent streams The objective of the test program was to characterize NOx, SO_2, CO, and particulate emission levels under various regimes of plant operation to measure components of concern for the liquid effluent stream Field collection data was supplemented with facility operating data and fuel analysis data necessary to support calculation of a boiler heat and material balance The results of this testing program will be used to provide input to a modification plan for the facility which would result in the facility meeting relevant environmental standards An additional objective of the test program was to provide training to the Kazakstan technical specialist team on how to use the portable fluegas and liquid analyzers in order for them to provide future assistance within Kazakstan at other industrial facilities

Levels of NOx, SO_2, and CO and liquid discharge parameters were determined using portable monitoring equipment provided by USAID Flue gas particulate emission levels were determined through the services of a local Kazakstan specialty subcontractor funded by USAID

2 0 UNIT DESCRIPTION

2 1 Combustion Systems

The Ekibastuz Power Station No 2 is located in northern Kazakstan, in Pavlodar oblast, near the city of Ekibastuz The station currently consists of two 500 Mw power blocks with plans for an ultimate expansion to eight 500 Mw blocks Each block has a design main steam flow of 1650 t/h at 545C and 255 atm with a reheat outlet temperature of 545C

Each block consists of a supercritical steam turbine (Model K-500-240-2) and monoblock, once through type boilers (Model P-57R), manufactured by the Podolsk Machine Building Factory The boilers are of the "T" configuration with a double cell, balanced draft furnace, with dry bottom disposal The boilers are designed to fire medium volatile bituminous coal from the Ekibastuz open cast mine Mazut is used as the auxiliary fuel for start-up The boilers have different, direct-fired, pulverized coal burner systems

Boiler #1 is opposed-wall, horizontally fired, with 24 swirl type, single register burners (2 horizontal rows of 6 burners on each wall) each with a separate secondary air duct (i e - no common windbox) The heat input per burner is 45×10^6 kcal/h There are no overfire air (OFA) nozzles installed

Boiler #2 has a tangentially fired, Low-NOx, pulverized coal firing and bulk furnace air staging (OFA) system with 24, primary air/pulverized coal, fixed nozzles (3 horizontal rows of 4 burners on each wall) with one firing circle in each of the two furnace cells Each coal nozzle is equipped with a separate secondary air duct (i e - no common windbox) The heat input per main coal nozzle is 45×10^6 kcal/h The secondary air nozzle of each main coal nozzle is arranged so that it contributes to the formation of a large diameter, concentric combustion airflow "circle" in the vicinity of the furnace tubewalls, creating a local oxidizing atmosphere for the prevention of localized slag-type wall deposits and tube metal corrosion attack A control damper is provided in the secondary air flow to each burner This damper was designed to allow a portion of the secondary air flow to be diverted and used to form the large diameter concentric airflow "circle" The majority of the secondary airflow, combining with the primary air/pulverized coal mixture, contributes to the generation of a smaller diameter "firing circle" Due to heat radiation damage to these control dampers, a decision was made to discontinue use of the diverted secondary air flow stream At the time of testing these ports had been bricked over thus limiting the Low-NOx performance of the combustion system Bulk furnace air staging is accomplished by adjustment of the overfire air dampers

The draft system of each boiler consists of two forced draft (FD) and two induced (ID) axial flow, electric drive, fans The combined flue gas from both boilers discharge to a single 420 meter chimney Each boiler is supplied with raw coal from six silos, each with a screw, volumetric-type, raw coal feeder The feeders discharge to six per boiler, MPS, vertical spindle, medium speed pulverizers Each pulverizer has an integral centrifugal classifier and electric motor drive Coal throughput at design rating is approximately 58 te/h, with five pulverizers in operation Each pulverizer supplies pulverized coal to four burners through PA/PC conduits The pulverizers are pressurized Primary air (PA) is supplied by two per boiler, radial flow, electric drive, fans The PA fans take suction from the discharge of the FD fans

Particulate emission control for each boiler consists of four Venturi Scrubbers (Model MMK 4x2/7) followed by two, four-field Electrostatic Precipitators (ESP's) positioned upstream of the two ID fans per boiler There is no fluegas desulfurization (FGD) equipment installed The design ash collection efficiency was 99 5% The wet stage of the ash collection system was intended for partial collection of ash (about 92%) and improvement of the flyash properties for improved EPS performance During initial testing of the ash collection systems, (following commissioning), the ash collection efficiency was determined to be 98 77% on block #1 and 99% on block #2 However, since commissioning the efficiency of the ash collection systems have deteriorated significantly due to ESP corrosion, excessive Venturi wear, and Scrubber blockage

2 2 Liquid Effluent Systems

(LATER)

2 2 Liquid Effluent Systems

Wastewater at Ekibastuz No 2 is generated from the following main source categories

- Sanitary Waste Treatment Plant,
- Ash Disposal System,
- Water Treatment Plant,
- Cooling Water Supply System,
- Potable Water Treatment Plant,
- Oily Water Collection Systems

A brief description of each system/plant and its respective liquid effluent is provided in the following subsections

2 2 1 Sanitary Wastewater

Sanitary wastewater is derived from the main and auxiliary buildings of Ekibastuz No 2 and from the Solnechny construction camp (support village of the power plant) Sanitary waste is treated mechanically and biologically, followed by chlorination After treatment, wastewater is discharged to the ash disposal pond and solids are recovered and used as fertilizer

The design capacity of the sanitary waste treatment plant is 10,000 m^3 per day The actual throughput is 4000 m^3 per day The underutilization of the plant is due to uncompleted development of the station and its associated support village

Treated sanitary wastewater is routinely monitored for suspended solids and pH according to regulatory requirements Additional analysis is periodically performed on sanitary wastewater for the following parameters color, transparency, COD, nitrates, nitrites, ammonium, phosphates, and BOD

Sample results of liquid effluent from the sanitary wastewater treatment plant are presented in Section _____ of this report *(J Doyle Note This may be the "mystery sample" of 5 November)*

2 2 2 Ash Disposal System *----> Have J Doyle check this description<----*

Water for the wet transport of ash is pumped from the venturi and scrubber systems Ash and bottom slag are combined and pumped to airlifts which raise it through pulp lines to a height of 21 meters The facility maintains two pulp lines for the wet transport of ash (one line is auxiliary) The 1020mm diameter lines transport ash a distance of 17 4 km by gravity flow The water consumption of the ash collection and transportation system is 2000 - 2200 tons per hour

296

Wet ash and other combined wastes (described within this section) are discharged to an ash pond of _____m3_ capacity which is referred to as Lake Karasor

Analytical results of samples obtained from the ash pond are presented in Section _____ of this report

2 2 3 Water Treatment Plant

Raw water used for boiler make-up and turbine requirements is treated by a system of mechanical filters and chemical action prior to use in boiler/turbine applications The following wastewater is generated as a result of these industrial water purification activities

- Neutralizer tank wastewater,
- Mechanical filter wastewater,
- Sodium-cation filter wastewater,
- Brine tank wastewater

The above wastewater constituents are monitored for pH in compliance with applicable regulations (6 5 - 8 5), and then discharged to the ash pond Approximately 100m3 per day of wastewater is generated and discharged from the water treatment plant

Analytical results of samples obtained from the water treatment plant are presented in Section _____ of this report *(J Doyle Note This may be the " mystery sample" of 5 November)*

2 2 4 Cooling Water System

Cooling water is derived from an artificial lake referred to as the Shandasksor cooling reservoir The Shandasksor reservoir has an area of approximately 42 7 km^2 and contains approximately 259 8 million m^3 of water Ekibastuz No 2 uses a once through circulating cooling system which requires approximately 40 - 60 m^3/hr of water for the two working blocks of the power plant The cooling water is used to cool turbine condensers, turbine oil coolers, generators, flue gas pump bearings, blower fans, and other auxiliary equipment In addition, the cooling water supply is also used for boiler washdown and for cleanup of the fuel handling room and other miscellaneous rooms Please Note Wastewater generated from boiler washdown, the wet cleaning of the fuel handling room, and miscellaneous rooms is discharged to the wet ash disposal system and is not returned to the Shandaskor reservoir This wastewater is not monitored prior its discharge to the ash disposal system

297

The temperature of the cooling water is continuously monitored at the system inlet and outlet points Cooling water is monitored on a quarterly basis for the following parameters pH, BOD, metals, oil, and suspended solids

Analytical results of samples obtained from the cooling water system are presented in Section _____ of this report

2 2 5 Potable Water Treatment Plant

The 458 km long Irtysh-Karaganda canal is the primary source of fresh water in northeast Kazakhstan Water from the Irtysh-Karaganda canal is pumped to a potable water treatment plant called the Struya Drinking Water Unit *(Is this unit located at the power plant??)*
Liquid waste from the potable water treatment plant is ultimately discharged to the ash pond Information regarding the quantity and quality of potable water treatment plant effluent was unavailable at the time this report was written

2 2 6 Oily Water Collection Systems

Two systems are employed to collect water which may be contaminated with lubricating oil and water which may be contaminated with mazut

Sources of water contaminated with lubricating oil are
- In the main building - oil systems of turbines, generators, feed pumps, flue gas pumps, and pump glands
- Area around transformers, oil switches, emergency oil discharge, cableways and tunnels
- Oil tanks and pump glands
- Vehicle garages and parking areas

Sources of water contaminated with mazut are
- Glands of mazut pumps
- Flange joints of pipework and armature
- Mazut heaters
- Mazut storage tanks and discharge tanks
- Condensate filters of mazut room

Water contaminated with lubricating oil is collected via a system of floor drains Water contaminated with mazut is collected via the storm sewer system The floor drain and storm sewer systems discharge into one of three holding tanks which are pumped into an oil-water separator with a capacity of 45 liters/sec There are two 200m^3 holding tanks and one 25 m^3 holding tank The oil-water separator discharges up to 120 m^3 per day into an independent collecting reservoir located in the vicinity of the sewage

298

treatment plant The collecting reservoir discharges to the wet ash transport system The collecting reservoir discharge is not monitored for oil

3 0 FLUEGAS TESTING

3 1 Discussion

During the time period when the testing was being performed Block #1 was offline awaiting completion of repair work on it's main generator Due to the resulting dependence upon Block #2, plant operating staff had reduced flexibility in responding to requests by the testing team to change test regimes and still respond to plant power demands Since the testing subcontractor was not initially available and the Block #2 ESP was not in service, a decision was made to test for NOx, SO_2, and CO on Block #2 and for particulate emission testing to be performed when Block #1 was returned to service

Testing on Block #2 was performed by a joint team comprised of one Burns and Roe engineer and several of the Kazakstan technical specialists who were participating in this Regional Environmental Improvement Study The particulate testing on Block #1 was performed by specialty subcontractor Vostok Energo (see section 5 0 below)

Ten (10) tests were performed on Block #2 using two portable fluegas analyzer units Each of the tests were carried out at a different operating regime in an effort to determine the effect on emission rates due to changes in unit load, excess combustion air variations and overfire air variations (air staging) The definition of the planned testing regimes and the protocol to be followed by plant operating personnel was submitted to, and approved by, the Chief Engineer prior to the start of testing The planned test regimes are summarized in the table below

Test No	Date, 1996	Description	Load, MWe	No of Mills in Operation	No of Burners in Operation	Oxygen Content at Economizer Inlet, %
1	28 10	Reduced Load Baseline Testing	390	5	20	3
2	29 10A	Full Load Baseline Testing	450	5	20	3
3	29 10P	Full Load Excess Air Increase	450	5	20	3 5
4	30 10A	Full Load Excess Air Decrease	450	5	20	2
5	30 10P	Full Load OFA Evaluation	450	5	20	3
6	31 10A	Full Load OFA Evaluation	450	5	20	3
7	31 10A	Full Load OFA Evaluation	450	5	20	3
8	31 10P	Full Load OFA Evaluation	450	5	20	3
9	02 11A	Full Load Excess Air Decrease	430	5	20	1

10	04 11A	Full Load Excess Air Decrease	430	5	20	2

For all tests, samples were taken from each of the two ID fan outlet ducts at existing sampling nozzles In addition to the emissions data recorded on the portable fluegas analyzers, plant operating staff recorded key operating parameters and fuel analysis for the power block during each test The test regimes, recorded emission levels and unit operating data are summarized in Appendix A

3 2 Test Methods and Instrumentation

Flue gas testing was performed using battery powered portable flue gas analyzer units purchased by USAID from the Land Combustion Company All measurements were taken at the outlets of the two (2) Induced Draft fan, "A" and "B" During the testing the two LANDCOM 6500 units (No 784 and No 785) were identified as "Unit 1" and "Unit 2", respectively Unit 1 was always used to sample flue gas at Fan A and Unit 2 at Fan B

Whenever possible recording of emission data during each test was initiated after the unit had stabilized at the desired operating regime for 30 minutes Flue gas samples were taken by inserting the 3 meter probes into existing sampling ports in the ductwork leaving the ID fan

The Land units (LANCOM 6500) were configured with five electrochemical gas sensing cells The gas sensor types and measurement ranges included were as follows

Sensor Type	Range
CO (low range)	0 to 2000 ppm
NO_2	0 to 100 ppm
NO	0 to 1000 ppm
O_2	0 to 25%
SO_2	0 to 1000 ppm

Additionally, the units measure ambient temperature and flue gas temperature (using a Type K Thermocouple) The Land units were equipped with an internal printer, capable of providing a hard copy of recorded data, along with a serial communication (RS232) connection to allow the capturing of recorded data in database format for use on a personal computer The hard copy data readings and PC database information for the ten tests are included in Appendices E and F respectively

The Land units have are pre-programed with fuel factors for 6 standard fuels or fuel factors may be entered for custom fuels The fuel factors affect the instrument's calculations for CO_2, excess air, and emission levels in lb/mBtu For the tests performed during this program fuel factors were entered for a custom fuel (referred to as "Fuel 1") based upon a coal sample analysis supplied by the plant staff at the start of testing The coal used during all tests was Ekibastuz coal Even though coal samples were taken for each test, results of the analysis of these samples were not available until after completion of the testing The fuel analysis for Fuel 1 and calculated fuel factors based upon this analysis are as follows

Component (% by wt.)		Fuel Factor	Land PresetValues (Bitum.Coal)	Fuel 1 Values
Carbon	36 5	CO_2 max	18 6	18 5
Hydrogen	2 7	K_1	0 61	0 6106
Oxygen	6 5	K_2	0 00300	0 00408
Nitrogen	0 8	F	10140	9711
Sulfur	0 7	Vo (dry)/Ao	0 96	0 96
Moisture	5 1			
Ash	47 7			
Total	100			
LHV (kcal/kg)	3400			
HHV (kcal/kg)	3615			

The selected units of measurement during the tests were "ppm" Emission values were recorded as a "dry" analysis Measurements recorded on the LANDCOM analyzers (hard copy printer output) are normalized to 6% O_2 Actual concentration values (uncorrected) are stored in the instrument along with the corrected data and are captured when data is downloaded to the PC(Appendix F) This captured data is presented as corrected to 6% O_2 (boldface) and without the O_2 normalization factor applied

The flue gas analyzers were calibrated at the start of each test day Calibration was performed using gas from a blended, high pressure, gas cylinder supplied from Scott Specialty Gases The component gases in the blend were CO, NO, and SO_2 with a stated accuracy of + / - 2%

3 3 Unit Operating Data

3 4 Summary Of Test Results

3 4 1 Emissions of NOx and CO

Block #1

As pointed out above, Block #1 was out of service at the time of the testing program Emission data collected previously suggests the following emission rates would be experienced when operating at the rated capacity (500 MWe)

Component in Flue Gas	Emission, mg/Nm^3	Emission, g/s

NOx	800 - 1200	358 -537(*)
SO_2	1,520 - 2,690	680 - 1,200

* Assumes 100% conversion of NOx to NO_2

These emission values were not determined during this study and are provided for the purpose of comparison only

Block #2

Extensive testing was conducted in order to measure the emissions from Block #2 The data collected is described and analyzed below A summary of the ten (10) Test Regimes investigated is presented in Appendix A Highlights of each of the tests are presented below

Test 1 - Baseline Operation at Reduced Load Testing was intended to evaluate the operation of the unit at normal (baseline) conditions With boiler operating at reduced load (390 MWe) however, oxygen content at the economizer inlet was found to be greater than normal (4 3% vs 3 0%) NOx emissions were measured at 450 ppm, corrected to 6% oxygen (920 mg/Nm^3) while carbon monoxide was measured at 9 ppm These results at representative of a high combustion efficiency with excess oxygen present and are not considered representative of normal baseline operation

Test 2 - Baseline Operation at Normal Full Load An increase in boiler load to 450 MWe was accompanied by a reduction in excess oxygen to the normal control value of 3% Concentration of NOx was reduced to 309 ppm (633 mg/Nm^3) demonstrating the significant effect of excess oxygen on NOx formation CO production remained low at 12 ppm indicating a high combustion efficiency Unfortunately, flue gas composition data collected at the discharge of the "A" fan were found to be nonrepresentative (20% oxygen), and have been discarded Only emission data from the "B" fan discharge is available

Tests 3 and 4 - Oxygen Variation Tests While operating at Normal Full Load (450 MWe), excess oxygen, measured at the economizer inlet was varied, bracketing the normal value of 3%, to determine the effect on NOx and CO production The results are summarized as follows

Test No	Oxygen, %	NOx, ppm	CO, ppm A/B
3	4 0	334	14/12
4	1 8	251	750/23
2 (Base)	3 0	309	-/12

Increasing excess oxygen content (Test 3) had the expected result of increasing the concentration of NOx, although by only a small amount when compared with the baseline value (Test 2) Reducing the excess oxygen (Test 4) had a significant effect on the concentration of NOx The average value of NOx was found to be reduced to 251 ppm (515 mg/Nm^3), about 20% Measured

NOx	800 - 1200	358 -537(*)
SO_2	1,520 - 2,690	680 - 1,200

* Assumes 100% conversion of NOx to NO_2

These emission values were not determined during this study and are provided for the purpose of comparison only

Block #2

Extensive testing was conducted in order to measure the emissions from Block #2 The data collected is described and analyzed below A summary of the ten (10) Test Regimes investigated is presented in Appendix A Highlights of each of the tests are presented below

Test 1 - Baseline Operation at Reduced Load Testing was intended to evaluate the operation of the unit at normal (baseline) conditions With boiler operating at reduced load (390 MWe) however, oxygen content at the economizer inlet was found to be greater than normal (4 3% vs 3 0%) NOx emissions were measured at 450 ppm, corrected to 6% oxygen (920 mg/Nm^3) while carbon monoxide was measured at 9 ppm These results at representative of a high combustion efficiency with excess oxygen present and are not considered representative of normal baseline operation

Test 2 - Baseline Operation at Normal Full Load An increase in boiler load to 450 MWe was accompanied by a reduction in excess oxygen to the normal control value of 3% Concentration of NOx was reduced to 309 ppm (633 mg/Nm^3) demonstrating the significant effect of excess oxygen on NOx formation CO production remained low at 12 ppm indicating a high combustion efficiency Unfortunately, flue gas composition data collected at the discharge of the "A" fan were found to be nonrepresentative (20% oxygen), and have been discarded Only emission data from the "B" fan discharge is available

Tests 3 and 4 - Oxygen Variation Tests While operating at Normal Full Load (450 MWe), excess oxygen, measured at the economizer inlet was varied, bracketing the normal value of 3%, to determine the effect on NOx and CO production The results are summarized as follows

Test No	Oxygen, %	NOx, ppm	CO, ppm A/B
3	4 0	334	14/12
4	1 8	251	750/23
2 (Base)	3 0	309	-/12

Increasing excess oxygen content (Test 3) had the expected result of increasing the concentration of NOx, although by only a small amount when compared with the baseline value (Test 2) Reducing the excess oxygen (Test 4) had a significant effect on the concentration of NOx The average value of NOx was found to be reduced to 251 ppm (515 mg/Nm^3), about 20% Measured

concentrations of CO were inconsistant however with flue gas discharge from the "A" fan containing an average of 750 ppm while flue gas measured at the "B" fan discharge contained an average of only 23 ppm (with NOx concentration of 258 ppm) This investigation suggests that fuel and air flow are not properly balanced and that improved operation would be expected if these flows could be controlled more precisely

Tests 5, 6, 7 and 8 - Effect of Overfire Air Initial tests were conducted with the overfire air control damper inthe normal position, +15% Tests 5 - 8 were conducted to determine the effect of diverting combustion air to the furnace overfire air ports, reducing the quantity of air available in the combustion zone Boiler load during the four tests averaged 453 MWe (baseline value) while the oxygen content of the flue gas at the inlet to the economizer averaged 3% The test results are summarized below The baseline test (Test 2) is included for comparison Measured variations

Test No	Oxygen, %	OFA Damper Position, %	NOx, ppm	CO, ppm A/B
5	3 3	+ 30%	247	212/19
6	2 7	+ 50%	270	169/13
7	2 7	0	295	241/41
8	3 1	+ 75%	269	108/13
2 (Base)	3 0	+ 15%	309	-/12

Increasing the amount of air flow to the overfire air ports, all other variable being equal, would be expected to reduce the concentration of NOx in the flue gas, possibly accompanied by an increase in the production of CO As evidenced by the data presented in the table however, the position of the overfire air damper had little or no impact on NOx production The average NOx concentration for the 5 tests was found to be 280 ppm (570 mg/Nm^3), with the individual test results within 10% of this average

While no significant difference was observed between the NOx concentration in the flue gas exiting the two fans, CO measured values were significantly higher at the discharge of the "A" fan As described above, this suggests improved fuel/air distribution is required

Although the data indicate that variation of the overfire air damper has no effect on NOx emissions, it should be remembered that measurements of actual air flows were not carried out and it is possible that damper position has little or no effect on the distribution of air between the combustion zine and the overfire air ports

Tests 9 and 10 - Additional Oxygen Variation Tests Two additional tests were conducted to evaluate the effect of excess oxygen on the generation of NOx In these tests the oxygen at the economizer inlet was reduced significantly below normal operating levels For Test 9, oxygen in the flue gas was reduced to only about 0 7% This had a significant impact on NOx generation, reducing the measured values to only 165 ppm, a greater than 45% reduction from the baseline value (Test 2) Of course, the reduction in combustion air resulted in a significant increase in CO

305

production, with CO concentrations reaching 1500 to 3000 ppm Operation of the combustion system at this condition was investigated for only a short period of time

Based on the very high CO production in Test 9, air flow was increased to an average value of 1 6% at the economizer inlet for Test 10 Measured emissions were almost identical to those recorded during Test 4, which was also designed to investigate the effect of excess air on NOx production Results from Test 10 are compared with those from Test 4, and with the Baseline test, in the Table below

Test No	Oxygen, %	NOx, ppm	CO, ppm A/B
10	1 6	248	500/31
4	1 8	251	750/23
2 (Base)	3 0	309	-/12

The average value of 250 ppm (510 mg/Nm^3) is about 20% below the Baseline Test (Test 4) and about 10 % below the average of the 5 tests conducted at an excess oxygen content of 3%

During the testing periods, samples of both fly ash and bottom ash (slag) were collected and were analyzed be the Station laboratory to determine the unburned carbon content since this is a good indication of combustion efficiency in the furnace Results are summarized below

Sample Date	Test No	Carbon Content of Fly Ash, %	Carbon Content of Slag, %	Average NOx, ppm
28 10 96	1	1 8	1 7	450
29 10 96	2	2 2	2 2	309
29 10 96	3	2 4	1 9	334
30 10 96	4	3 2	4 9	251
30 10 96	5	2 9	5 6	247
31 10 96	6	3 3	5 4	270
31 10 96	7	2 8	4 7	295
31 10 96	8	1 3	6 3	269
02 11 96	9	4 8	6 5	165

It is clear from these analyses that as excess oxygen content is reduced, reducing NOx production, carbon on ash increases, reducing overall boiler efficiency

An analysis of the test data suggest that Boiler #2 can beoperated in a stable mode limiting NOx emissions to less than 310 ppm (635 mg/Nm^3) while limiting overall CO production to less than 150 ppm (average) since these results were obtained in all tests where the economizer inlet oxygen content averaged between 2 7 and 3 3% Since the average NOx emission was only 280 ppm (574 mg/Nm^3), a value of 310 ppm (635 mg/Nm^3) provides sufficient margin for estimation of maximum mass emissions from the boiler

From the results of these measurements it is possible to estimate the mass emissions of from the boiler Operation at design capacity (500MWe) with a heat input of about 1,100 Gcal/hr would result in the following mass emission rates

Component in Flue Gas	Emission, mg/Nm^3	Emission, kg/s
NOx	635	284(*)
CO	150	67

* Assumes 100% conversion of NOx to NO_2

These values compare favorably with the 1996 - 1997 emission limits

3 4 2 Emission of Sulfur Oxides

Unlike the generation of Nitrogen Oxides which depend to a great extent on the condition of combustion, emissions of sulfur dioxides (SO_2) is essentially a function of fuel sulfur content and can readily be predicted from fuel analysis Estimated emissions from Block #1 have been presented previously in Section 3 4 1 For Block #2, SO_2 concentrations were measured by the Land analyzer during each of the ten (10) tests described above and the results are reported in the Appendix

SO_2 concentration in the flue gas was found to vary considerably during the testing period, from a low of 532 ppm (1520 mg/Nm^3) during Test 1 to a high of 940 ppm (2690 mg/Nm^3) during Test 5 The measured emission value of 1520 mg/Nm^3 would be expected when firing a coal with a sulfur content of 0 43% (3840 kcal/kg LHV), while the emission value of 2690 mg/Nm^3 would be expected when firing a coal with a sulfur content of 0 7% (3506 kcal/kg LHV) Data from three (3) coal samples collected during Tests 1-3, had sulfur contents ranging from 0 32% to 0 47% Sulfur content of the fuel during later tests was not determined

From the results of these measurements it is possible to estimate the mass emissions of SO_2 from the boiler Operation at design capacity (500MWe) with a heat input of about 1,100 Gcal/hr would result in the following mass emission rates

Component in Flue Gas	Emission, mg/Nm^3	Emission, kg/s
SO_2	1,520	680

SO_2	2,690	1,200

The greater value (1,200 kg/s) exceeds the Allowable Emission Limit (AEL) for SO_2 Calculations indicate that when firing a fuel with a heating value of 3,400 kcal/kg, fuel sulfur content would be limited to about 0 65% to achieve the required emission limit

3 4 3 Emissions of Particulates

Since particulate matter (fly ash) is not of uniform composition and size and is not uniformly distributed in the flue gas, special methods and special equipment is required to determine the composition of fly as in flue gas VostokEnergoGasoOchistka, an enterprise specializing in such testing was retained to perform these tests at Ekibastuz Several ash emission tests were conducted at the discharge of Block #1 electrostatic precipitators (ESPs)

Four sets of particulate emission test data were collected at the outlet of each of the two electrostatic precipitators on Block #1 During each test, three (3) sets of ash concentration measurements were made at each ESP outlet Isokinetic sampling from a 24 point matrix in the ESP outlet duct ensured that measurements of ash concentrations would be representative A discussion of the test program, drawings describing the ductwork configuration and the test locations, boiler operating conditions and the test results are provided in a report by the testing organization attached as Appendix xxx The test conditions and results are summarized below

Test No	1	2	3	4
Boiler Load, MWe	400	400	350	300
Ash Collection Equipment in Operation	Wet Scrubber + ESP(1)	Wet Scrubber Only	Wet Scrubber + ESP(1)	Wet Scrubber + ESP(1)
Ash Loading to System, kg/hr	120,771	118,435	85,461	85,411
Ash Loading from System, kg/hr	2,660	6,455	3,012	2,825
Ash Collection Eff , %	97 80	94 55	96 48	96 70
Ash Emissions to Stack, mg/Nm^3	1,430	3,450	2,110	1,790

(1) Boiler is equipped with two (2) ESPs (A and B) Each is powered by eight (8) electrical fields During testing, only two (2) fields on ESP A and five (5) fields on ESP B were in operation and the majority of the fields on ESP B operated only at partial power

A comparison of Test 1 (ESP on) and Test 2 (ESP off) dust collection efficiencies confirm that the wet scrubber is the primary dust collection device and that the ESP is barely functional (apparent dust collection efficiency of about 60%) The data also confirm that particulate emissions are at least 1,430 mg/Nm^3, almost 30 times greater than the international standard of 50 mg/Nm^3

Test data collected at reduced operating loads show poorer dust collection efficiency This is not unexpected since the wet scrubber dust collection efficiency would be expected to decrease as flue gas velocity in the scrubber is decreased

Flue gas measurements during testing also indicated a significant inleakage of air into the dust collection system Excess air concentration at the inlet to the scrubber was found to average about 1 33 while excess air at the ESP outlet was found to range from 1 6 to 1 73 This indicates air leakage on the order of 28 to 38% The cause of the excessive air inleakage at the scrubber and the ESP is corrosion of the equipment and connecting ductwork which permits air to leak into the system

4 0 WATER TESTING

4 1 Discussion

The investigation of water supply and wastewater sources was carried out in conjunction with the operating program, developed with the participation of Ekibastuz station personnel and authorized by the Chief Engineer of the facility

Wastewater sources which were investigated as part of the prototype facility testing program are as follows

- Circulating Water Pond,
- Ash Pond (Lake Karasor),
- Water Treatment Plant Final Discharge (Neutralized),
- Circulating Water Intake Channel,
- Circulating water Outfall Channel

The following water supply source was investigated as part of the prototype facility testing program

- Irtysh-Karaganda Channel (River supply channel to circulating water pond)

During the investigation, the team was guided by the following documents

- " Rules For Surface Water Protection of The Republic of Kazakhstan" (RND 1 01 03-94, Almaty, 1994),
- " The Instructions on Surface Water and Wastewater Sampling for Chemical Analysis" (Almaty 1994),
- The International Standard ISO 5667 (from 1-82 through 4-87), including Guidance for Compiling Sampling Programs, and Methods of Sampling from Natural and Artificial Sources,
- GOST 17 1 5 04-81 " Nature Protection A Hydroorb Gear and Devices for Sampling, Primary Handling and Storage of Natural Water Samples,"
- GOST 17 1 5 05-85 " Nature Protection A Hydroorb The Common Requirements for Surface and Marine water, Ice and Atmospheric Precipitation "
- World Bank - Environment, Health and Safety Guidelines for Thermal Power Plants

Wastewater samples were taken in turbulent streams on rectilinear segments of discharge points, outside of the stagnation zone, and at the point just prior to wastewater discharge into the receiving water body

At the circulating water pond, samples were taken, on the pond within 150m of the outfall channel, on the far shore opposite the outfall channel, in the middle of the pond

at the surface and at depth Pond sampling was conducted with the use of a boat provided by the power plant

Water sampling of the Irtysh-Karaganda Channel was conducted at a hydrometric bridge pump station which forms the second lift of the Channel

Field analysis of water was conducted with the portable water analyzer " Solomat" which was provided to the project by USAID The following indices were measured in the field conductivity, dissolved oxygen, ammonium, nitrate, pH, turbidity, and temperature

Laboratory analysis was conducted on water samples retrieved from the ash pond and the Irtysh-Karaganda Channel for the following indices hardness (Ca and Mg), pH, alkalinity, turbidity, oxidizability, and content of ions (SiO^{2-}, Fe^{3+}, Cu^{2+}, Ca^{2+}, Mg^{2+}, Cl, NO_3, and NO_2

Laboratory analysis was conducted on water samples retrieved from the circulating water pond for the following indices temperature, pH, COD, dissolved solids, NH_4, NO_3, NO_2, PO_4^{3+}, suspended solids, BOD and dissolved oxygen

Specially prepared polyethylene containers were used to transport samples to the laboratory for analysis Since the samples were analyzed within 3 hours of the sampling event, the samples were not preserved

4 2 Testing Equipment

A water quality monitor equipped with a multichannel water quality probe was used for the field investigations at Ekibastuz No 2 The portable instrument can also be configured for use in a laboratory setting with additional sensors

4 3 Test Results

Tables ___ and ___ represent results obtained with the portable water analyzer Tables ___ through ___ represent results obtained from the Ekibastuz No 2 analytical laboratory The results obtained with the portable water analyzer for ammonium, nitrate and dissolved oxygen should be viewed as unrepresentative of actual field conditions Stable field readings for these parameters were difficult to achieve and there were difficulties in calibrating the device for these parameters Factors which may have had an influence on the questionable results are the low ambient temperatures encountered in the field and the quality of in-house prepared calibration solutions

Upon review of the qualified data taken together with the data provided by the analytical laboratory, the measured values are equivalent to the historical norms which have been measured at the facility None of the reliably measured water quality values

31

at Ekibastuz No 2 exceeded regulatory limits *J Doyle note The suspended solids in the " mystery sample" of 67 5 mg/l is above the World Bank Guidance of 50 mg/l This is the only sample which exceeded World bank Guidance criteria*

312

5 0 PROTOTYPE MODIFICATION PLAN

Reduction of Nitrogen Oxide Emissions

Block #1

Boiler #1 is opposed-wall, horizontally fired, with 24 swirl type, single register burners (2 horizontal rows of 6 burners on each wall) each with a separate secondary air duct (i e - no common windbox) The heat input per burner is $45x10^6$ kcal/h There are no overfire air (OFA) nozzles installed NOx emissions have been estimated at 800 - 1200 mg/Nm^3 The following boiler modificatons are recommended

1 Dismantle and remove all 24 existing swirl type single register burners Replace these burners with 24 double register burners Burners of this type are available from Babcock & Wilcox Company and Foster Wheeler (FWEC) in the USA, from Mitsui Babcock in the UK, from Deutsche Babcock and Steinmueller in Germany

2 Retrofit 12 (2 horizontal rows of 6) overfire air (OFA) registers into newly created furnace tube openings The new OFA registers to be supplied with air by new ducting Location (elevation) of the new OFA registers to be optimized, preferably by computer modeling (CFD) to minimize CO and unburnt carbon in flyash

3 Retrofit a FWEC style Boundry Air System into the lower furnace to combat the adverse effects associated with a reducing atmosphere This System provides an oxygen rich atmosphere at the surface of the walls in the furnace combustion zone Small amounts of secondary air are admitted through slots, between the tubes, across the entire furnace width and into the burner zone throgh ports located in the lower corners of each firing wall

4 Control of a Low-NOx firing system requires appropriate instrumentation to permit the control of both total air flow (excess oxygen) and the distribution of the air Defective economizer inlet oxygen analysers should be replaced to allow more precise control of combustion air In addition, CO analyzers should be installed to ensure efficient combustion A complete boiler emission monitoring system, measuring NOx, CO and SO_2 would be a great advantage in controling emissions and demonstating complience with emission limits

5 Control of a Low-NOx firing system also requires capability to make on line adjustments to valves and dampers controlling the flow of air to the OFA system, since optimum NOx reduction will vary with operating load Some degree of automatic control of air distribution should be considered

6 The application of a Low-NOx combustion system may result in an increase in unburnt carbon in flyash Replacement of the 6 centrifugal mill classifiers with dynamic mill classifiers should be considered only if such problems arise in the operation of the new combustion system

It is anticipated that these major furnace combustion modifications will reduce NOx emissions by approximately 55% to a maximum discharge concentration of 540 mg/Nm^3 This emission limit meets both the World Bank recommended standard (650 mg/Nm^3) and the Ekibastuz Station #2

emission limit (AEL) Additional information describing the recommended equipment is presented in Appendix xxx

Block #2

Boiler #2 has a tangentially fired, Low-NOx, pulverized coal firing and bulk furnace air staging (OFA) system with 24, primary air/pulverized coal, fixed nozzles (3 horizontal rows of 4 burners on each wall) with one firing circle in each of the two furnace cells Each coal nozzle is equipped with a separate secondary air duct (i e - no common windbox) The heat input per main coal nozzle is $45x10^6$ kcal/h

The secondary air nozzle of each main coal nozzle is arranged so that it contributes to the formation of a large diameter, concentric combustion airflow "circle" in the vicinity of the furnace tubewalls, creating a local oxidizing atmosphere for the prevention of localized slag-type wall deposits and tube metal corrosion attack A control damper is provided in the secondary air flow to each burner This damper was designed to allow a portion of the secondary air flow to be diverted and used to form the large diameter concentric airflow "circle" The majority of the secondary airflow, combining with the primary air/pulverized coal mixture, contributes to the generation of a smaller diameter "firing circle" Due to heat radiation damage to these control dampers, a decision was made to discontinue use of the diverted secondary air flow stream At the time of testing these ports had been bricked over thus limiting the Low-NOx performance of the combustion system Bulk furnace air staging is accomplished by adjustment of the overfire air dampers

Recorded NOx emissions during the recent testing program ranged to a maximum of 450 ppm (920 mg/Nm^3) during the reduced load baseline test, presumably due to high excess oxygen in the combustion zone Operation at full load, under controlled excess oxygen suggest that Boiler #2 can beoperated in a stable mode limiting NOx emissions to less than 310 ppm (635 mg/Nm^3) while limiting overall CO production to less than 150 ppm (average), since these results were obtained in all tests where the economizer inlet oxygen content averaged between 2 7 and 3 3% Since the average NOx emission was only 280 ppm (574 mg/Nm^3) during this testing program, a value of 310 ppm (635 mg/Nm^3) provides sufficient margin for estimation of maximum mass emissions from the boiler The following boiler modificatons are recommended

1 The firing system installed on Block #2 is considered state-of-the-art Its type and principles are quite similiar to the ABB Low-Nox Concentric Firing System (LNCFS) which has been demonstrated to achieve acceptable NOx emissions The design of this system should be retained with certain modifications

2 Causes of the failure of the secondary air control system should be investigated and modification made accordingly to achieve a more effective distribution of combustion air and secondary air in the concentric firing circle

3 The design of the Overfire Air control system should also be investigated Test data suggest that adjustments to the OFA damper positions have essentially no effect on the flow of air to these ports Pressure and flow measurements can easily identify the cause(s) of any OFA control problems

4 Control of a Low-NOx firing system requires appropriate instrumentation to permit the appropriate control of both total air flow (excess oxygen) and the distribution of the air Defective economizer inlet oxygen analysers should be replaced to allow more precise control of combustion air In addition, CO analyzers should be installed to ensure efficient combustion A complete boiler emission monitoring system, measuring NOx, CO and SO_2 would be a great advantage in controling emissions and demonstating complience with emission limits

5 Control of a Low-NOx firing system also requires capability to make on line adjustments to valves and dampers controlling the distribution of combustion air, since optimum NOx reduction will vary with operating load Some degree of automatic control of air distribution should be considered

It is anticipated that these relatively inexpensive modifications and improvements will reduce NOx emissions by at least 20% to a maximum discharge concentration of 510 mg/Nm^3 This emission limit easily meets the World Bank recommended standard (650 mg/Nm^3) and also the Ekibastuz Station #2 emission limit (AEL) Additional information describing the recommended equipment is presented in Appendix xxx

Reduction of Particulate Emissions

Particulate emission control for each boiler consists of four Venturi Scrubbers (Model MMK 4x2/7) followed by two, four-field Electrostatic Precipitators (ESP's) positioned upstream of the two ID fans per boiler The design ash collection efficiency was 99 5% The wet stage of the ash collection system was intended for partial collection of ash (about 92%) and improvement of the flyash properties (ash resistivity) for improved EPS performance

During initial testing of the ash collection systems, (following commissioning), the ash collection efficiency was determined to be 98 77% on Block #1 and 99% on Block #2 However, since commissioning the efficiency of the ash collection systems have deteriorated significantly due to ESP corrosion, excessive Venturi wear, and Scrubber blockage At this time the ESPs on both boilers are in such poor mechanical condition that they have little if any collection efficiency Essentially all dust collection is now accomplished by the scrubber which has been found to operate with a collection efficiency of less than 95% Measured emissions ranged from 1,400 to 2,100 mg/Nm^3 during recent testing of the combined system on Block #1

A detailed review of the original system design indicates that there is no successful industry experience with such a system While the concept of conditioning of ash to improve resistivity is well known, and increasing flue gas moisture content has been demonstrated to effectively reduce resistivity, such a system is very difficult to design and operate since substantial cooling of the flue gas below the acid dew point or the presence of liquid water droplets, leads to substantial corrosion of the electrostatic precipitator, which is constructed only of carbon steel The ash collection system designed and installed at this station suffers from both of these problems and its operation has resulted in severe corrosion of both the ESPs and the ductwork Accordingly, a complete replacement of thedust collection system is recommended

1.2 Overview of Particulate Control Technologies

A number of potential particulate control alternatives are available for both coal and mazut fired boilers These include both "dry" technologies such as

Cyclones (and Multiclones)
Electrostatic Precipitators
Fabric Filters (Baghouses)

and "wet" technologies such as Wet Scrubbers (including venturi scrubbers) Advantages and disadvantages of these technologies, their effectiveness and relative costs information are described later in this document When considering selection of the most effective emission control technology it should be remembered that a significant fraction of fly ash produced from a pulverized coal boiler is less than 10 micron in size (Exhibit 1 2-1)

While wet scrubbing systems were utilized in the past for particulate control, their very high pressure drop, large fresh water demand, associated corrosion problems and ash/waste water disposal concerns have essentially eliminated them from consideration when constructing a new coal fired boiler Since cyclones lack the capability to recover fine particulate material from the flue gases, they are also no longer considered for pulverized coal applications In fact, Western technology utilizes either electrostatic precipitators or fabric filters almost exclusively for the removal of fly ash from coal fired power plant flue gas Cyclones or Multiclones have been applied to mazut fired boilers however and may be considered where reduction in particulate emissions from such stations are required

1.3 Electrostatic Precipitators

The basic principles of electrostatic precipitation is described below

- Ash particles are (negatively) charged by electric current
  - Current is applied by electrically charged wires or rods
  - Stronger electric current (higher voltage) increases collection efficiency so maximum voltage is desirable
- Particles migrate, or drift, toward the grounded collection plate due to the effect of the strong electrical current
  - Migration velocity is function of particle diameter Large particles migrate at greater velocity and are therefore collected more easily
  - Fly ash chemical properties also impact the particle collection efficiency
- Particles are dislodged from the collection plate and fall to the bottom of the electrostatic precipitator where they are collected for disposal

These principles are described in more detail in Exhibit 1 3-1

Both mechanical design features and fly ash characteristics have a major effect on the collection efficiency of an electrostatic precipitator

- Ash concentration (mg/Nm3) has a significant impact High inlet dust loading makes it difficult to achieve high voltage on the initial electrical fields of the ESP

Chemical composition and ash resistivity also have a major effect Resistivity is resistance (ohm-cm) of a cube of fly ash one cm on each side

Temperature has a major effect on resistivity Resistivity is usually maximum between 140 C and 200 C

Optimum resistivity is 10^9 to 10^{10} ohm-cm Normal fly ash resistivity is 10^{11} to 10^{12} ohm-cm or, in some cases even higher (10^{13} ohm-cm)

Absorbed acid (SO_3) and water on the ash surface reduce resistivity and improve collection efficiency Low sulfur coals do not benefit from this improvement

High resistivity ash limits useful power consumption, reducing the migration velocity

Low resistivity (high conductivity) ash limits the ability of the ash particle to hold a charge and collect on the collection plates This is not usually a problem with fly ash

Key design variables of the ESP are summarized below

Gas volume and flow path area Flue gas velocity through the ESP Normal design velocity is 1 to 1 5 m/s

Collecting electrode area. Specific collection area is total area of all collection plates (both sides) per unit quantity of flue gas volume flow (M^2/M^3/sec (A/V) The area can be increased as required to reach the necessary efficiency

Aspect ratio Length of collecting plate – Plate height Normal design value for high efficiency is at least 1 5 ratio

Number of electrical fields (sections) is also important Number of independent sections allows optimum voltage for each section Maximum voltage means maximum efficiency Also increases reliability

General terminology applied to the ESP is shown in Exhibit 1 3-2 while Exhibit 1 3-3 identifies some of the basic terms applied to the mechanical design of the ESP

Highlights of the mechanical design features incorporated in a modern Western design ESP are illustrated in the Exhibit 1 3-4 provided by the General Electric Company These features include

Rigidly mounted twisted bar **Discharge Electrodes** supported in a tubular mast assembly This provides uniform corona discharge with high voltage-low current characteristics along with high reliability

Rigid-Frame Collecting Plate, up to 14 6 meters in height, provide the surface for collection of the charged ash particles Plate spacing is normally 305 mm or 405 mm (center to center) This integrated panel design is produced in plate lengths from 1 8 meters to 2 7 meters The "roll formed profile" provides a quiescent flow zone directly opposite the discharge electrodes to improve efficiency

External ash removal **Rapping System** utilizes roof mounted individually controlled, highly sectionalized electromagnetic impact rappers which features on-line intensity and rapping frequency controls for optimum performance

Casing design featuring **Sneakby Baffles** in the roof, the ash hoppers and at the sides to prevent ash containing flue gas from bypassing the electrical fields Bypassing can have a significant impact on the ability to achieve dust collection efficiencies in the range of 99 9 %

Multiple Fields in the direction of gas flow will improve the performance of the ESP by allowing application of optimum voltage to each field A high efficiency ESP may have some 6 to 8 independent electrical fields in each cell In addition, increasing the number of fields reduces the effect on collection efficiency caused by an electrical failure to a single field

A typical Western design, for a high efficiency ESP has also been provided by the General Electric Company for a 500 MWe monoblock boiler firing low sulfur, high ash coal The design and performance characteristics are presented in Exhibit 1 3-5 Each of the eight field ESP's is powered by 16 independent transformer-rectifier sets Also of interest are the overall dimensions of each 48,800 m^2 precipitators Each contains about 30 % greater plate area than the Type 3 -4-265 -04 ESP's presently installed on similar size boilers in Kazakstan, while occupying almost the same plot area

1.4 Flue Gas conditioning

Flue gas conditioning can reduce collection plate size significantly by reducing the resistivity of the fly ash Flue gas conditioning, utilizes the addition of a small amount of SO_3 (less than 10 ppm) which deposits on the surface of the ash as sulfuric acid This technology has been widely applied in Western countries and is especially effective when low ash collection efficiency is the result of firing low sulfur coal (high resistivity ash) Application of this technology requires a source of elemental sulfur, either in molten or granular solid form to be utilized for the production of the required SO_3 The cost and availability of sulfur is important to consider when this technology is under investigation

The technology is described in detail by one of the suppliers of the conditioning systems, Wahlco (Exhibit 1 4-1) It is often applied in cases where the sulfur content of the fuel fired has been reduced to meet sulfur dioxide emission limits and ESP performance has been adversely impacted It is estimated that flue gas conditioning can reduce the collection plate area required to achieve a specific efficiency by as much as 30 to 40 %

1.5 Fabric Filters

Highlights of fabric filter technology are presented in Exhibit 1 5-1 As described in the Introduction, fabric filters represent the most versatile technology for the removal of solid particulate matter from a gas stream No particle is too large and few are too small for efficient collection and the technology is most effective when cleaning particulate matter with a wide range in particle size

distribution Selection of the fiber material and construction type (woven or felt) is of great importance in the application of this technology since the dust is to be removed from a hot, potentially corrosive flue gas stream A listing of modern fibers and their properties is presented in Exhibit 1 5-2

Removal of particulates from air by fabric filtration is a well established technology which has been applied to boiler flue gas for the past 15 - 20 years The filtration process is described in Exhibit 1 5-3

Fabric filtration methods are categorized by the type of bag cleaning which, in turn is determined by the flow of flue gas through the fabric bag When "dirty", flue gas containing ash flows into the bag and the dust is collected on the inside surface of the bag the method is referred to as Reverse Gas filtration Bag cleaning is accomplished by directing a "reverse flow" of clean flue gas to the outside of the bag, causing the bag to partially collapse and the collected dust to fall into the hopper below a necessary feature of such a system is the requirement that the flow of dirty flue gas be discontinued during the reverse gas cleaning Key features of this system are described in Exhibit 1 5-4

An alternative bag arrangement features the collection of dust on the outside of the filter bag with the flue gas flowing from the outside to the inside This design requires the bags to be supported on wire cages to prevent collapse during normal filtration Cleaning of the bags may be accomplished by applying a short "pulse" of air to the inside of the bag, causing the bag to expand slightly away from the surface of the wire cage and the dust to be shed from the outside surface Since this pulse is applied for less than one second, and the air is at a higher pressure than the flowing flue gas, it is not necessary to discontinue the flow of dirty flue gas during the cleaning operation Key features of this Pulse Jet system are described in Exhibit 1 5-5

Filter design and sizing issues are discussed in Exhibit 1 5-6 Reverse gas fabric filters typically are sized to provide a flue gas to fabric surface ratio of 0 01 cubic meters/second per square meter of cloth (0 01 meters/sec velocity through the cloth) Since cleaning is carried out without flue gas flow in the compartment being cleaned, this ratio is applied to the"net" surface area available for cleaning, not the total, or "gross" surface area In the past, reverse gas filtration was the technology of choice for new power plants applying fabric filter ash collection

Pulse jet fabric filters operate at higher velocities (0 02 meters/sec) and so require less cloth area Since they are cleaned while in operation, no adjustment in area is required to account for the bags being cleaned This results in a considerable reduction in filter size (plot area) and cost and the pulse jet design has recently become the technology of choice for utility applications, especially in retrofit situations

Each filter bag in a pulse jet installation would be 6 to 7 meters in length with a diameter of about 110 mm, providing a surface area of about 2 2 square meters A 500 MWe boiler, discharging over 3 million cubic meters per hour of flue gas, would require some 44,000 square meters of filter surface area or about 20,000 individual filter bags These filter bags would be arranged in individual compartments within a number of fabric filter casings The estimated plot area requirements for such a design would be significantly less than that of a high efficiency electrostatic precipitator (less than 1,200 square meters) with significant flexibility in the arrangement of the compartments Dust

collection efficiency would, of course, exceed that which could be achieved with any electrostatic precipitator

The relatively small plot area requirements and the flexibility in arranging the fabric filter compartments has led to the consideration of the retrofit of fabric filtration system into the existing casing of a low efficiency electrostatic precipitator and several such retrofits have been successfully demonstrated Exhibit 1 5-7 describes the such a retrofit to the 350 MWe Munmorah station in Australia where fabric filter bags replaced the internals of the existing electrostatic precipitator which had a collection plate area of less than 80 square meters/cubic meter per second flue gas flow While such a retrofit should be seriously considered where electrostatic precipitator efficiency is unsatisfactory, its application requires that the existing precipitator casings be in good physical condition and that the system is capable of operating with the increase in flue gas side pressure drop (150 mm water) required to operate a fabric filter system

1.6 Combined Technologies (ESP plus Fabric Filter)

Increasing pressure to reduce particulate emissions from existing coal fired boilers equipped with electrostatic precipitators has resulted in the development of a new approach combining the functioning electrostatic precipitators with a retrofit fabric filter system This technology, **CO**mpact **H**ybrid **PA**rticulate **C**ollector (**COHPAC**) involves the installation of a Compact Pulse Jet Fabric Filter downstream of the operating ESP to act as a particulate "polishing" or performance enhancing device Where the existing ESP removes a significant portion of the fly ash from the flue gas, and only a relatively small amount remains to be removed, the pulse jet fabric filter bags can be sized for significantly higher flue gas velocity than where a full dust cake is to be collected on the fabric surface

The COHPAC concept has been demonstrated on a full size 574 MWe lignite boiler in the US and a description of the application is provided in Exhibit 1 6-1 The reduced ash loading allows the flue gas velocity through the fabric to be increased from the typical value of 0 02 meters/sec to as high as 0 06 meters/sec , reducing the number of filter bags required by a factor of 3 Economic evaluations have suggested that this approach is more cost effective than either adding an additional electrostatic precipitator, is series with the existing one, or replacing the ESP entirely with a new pulse jet fabric filter As in other applications where fabric filter technology is considered, the higher gas side pressure increase may require replacement of the existing boiler ID fans

For the cases under consideration in Kazakstan, where outlet ash concentrations from the existing dust collection equipment exceed 2,000 mg/Nm^3, or where the flue gas contains moisture from the wet dust collection system, it is unlikely that the COHPAC technology could be successfully applied

1.7 Comparison of Alternative Technologies

The World Bank has completed a preliminary investigation of alternative particulate control technologies and has concluded that dry dust collection technologies, utilizing either electrostatic precipitators or fabric filters, are preferred (Exhibit 1 7-1) Both technolgies can achieve the low emission level required to meet strict emission standards Investment and levelized operating cost comparisons (Exhibit 1 7-2) suggest that to achieve high ash removal efficiencies when firing low

sulfur fuels, the fabric filter technology may be the most cost effective Since economic evaluations are highly site specific, care should be taken in applying these conclusions the installations in Kazakstan however

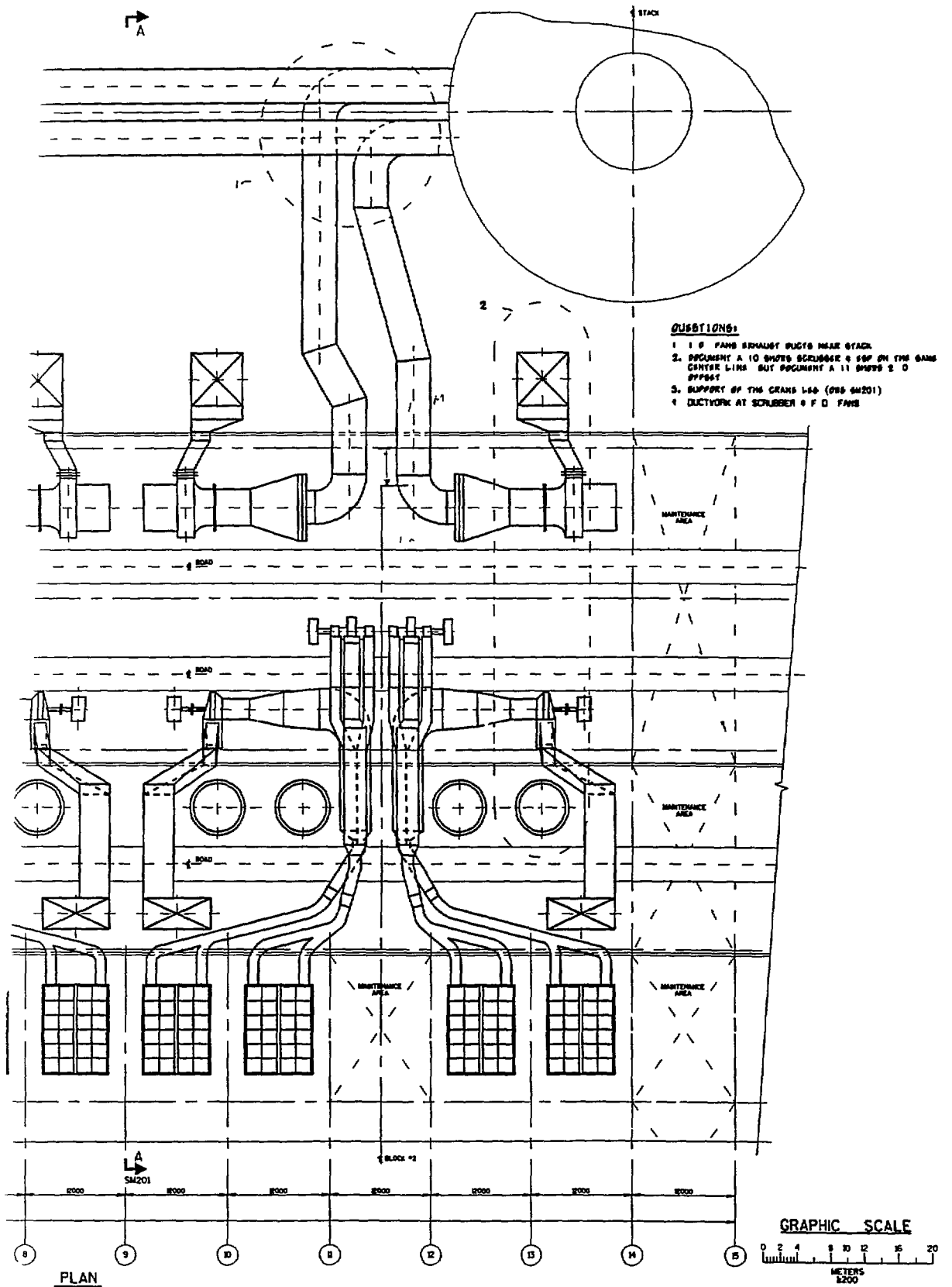

QUESTIONS:

1. 1 & FANS EXHAUST DUCTS NEAR STACK
2. DOCUMENT A 10 SHOTS SCRUBBER & SDP ON THE SAME CENTER LINE BUT DOCUMENT A 11 SHOTS 2 D SPPORT
3. SUPPORT OF THE CRANE LEG (SEE SM201)
4. DUCTWORK AT SCRUBBER & F D FANS

PLAN

STATUS: 9-25-96

USAID DELIVERY ORDER NO.9, TASK NO.4
KAZAKSTAN ENVIRONMENTAL IMPROVEMENT STUDY
PROTOTYPE FACILITY MODIFICATION PLAN
EKIBASTUZ NO.2

GENERAL ARRANGEMENT
BLOCKS NO 1 & 2

BURNS AND ROE COMPANY
Engineers and Constructors

Drawing No. 5909 SM200 A

322

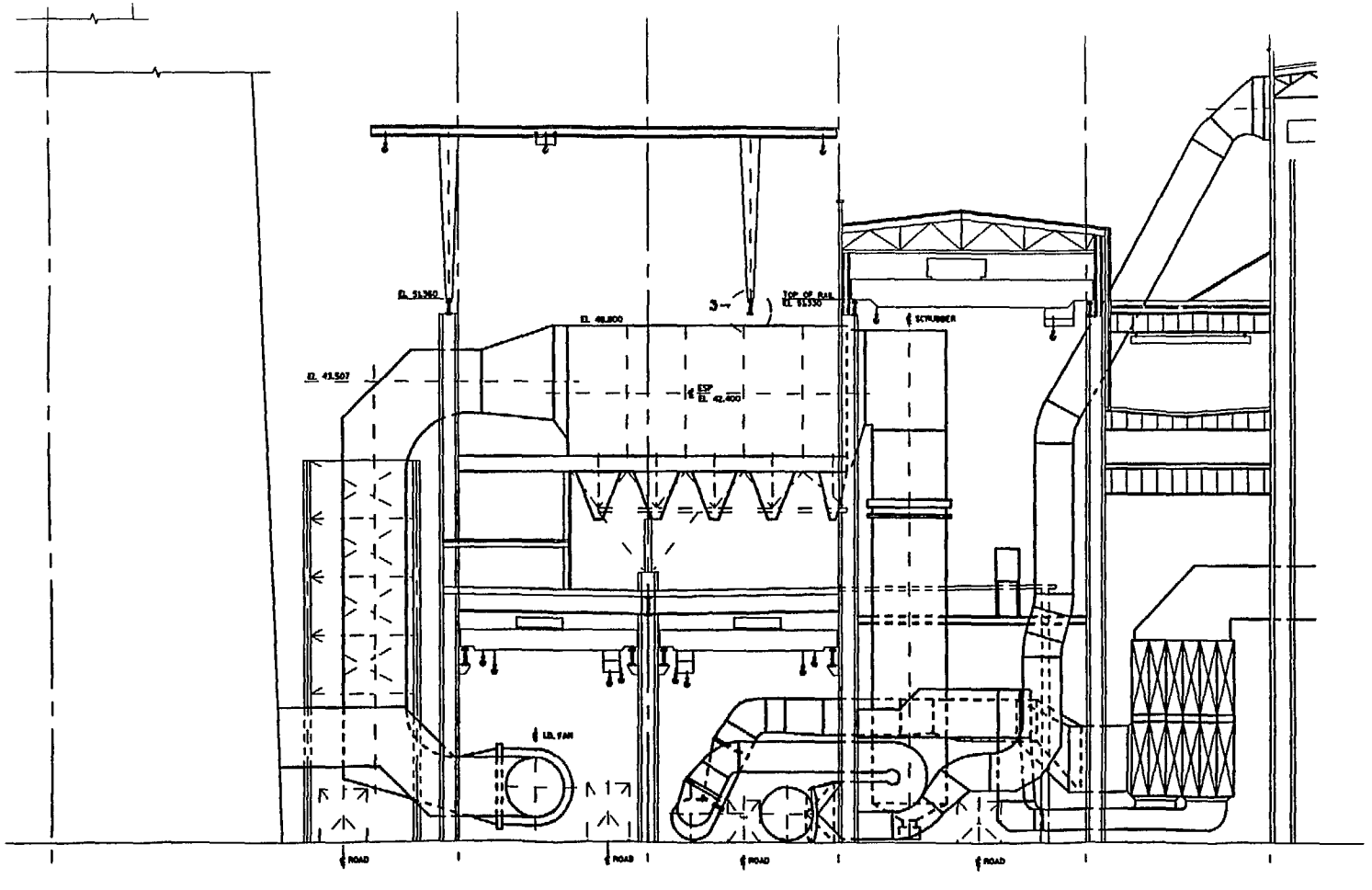

SECTION A-A

GRAPHIC SCALE

0 2 4 6 10 12 16 20

METERS
1:200

USAID DELIVERY ORDER NO 9, TASK NO 4
KAZAKSTAN ENVIRONMENTAL IMPROVEMENT STUDY
PROTOTYPE FACILITY MODIFICATION PLAN
EKIBASTUZ NO.2
GENERAL ARRANGEMENT
SECTION A A

BURNS AND ROE COMPANY
Engineers and Constructors
Bergen, NJ
Component of Burns and Roe Enterprises, Inc.

Work Order 5909
Drawing No SM201

STATUS: 9-24-96

Rev No | Revision | Date | Dwn | Chkd | Approved Outline | Rev No | Revision | Date | Dwn | Chkd | Approved Outline

Drawing Control
Purpose | Initial Issue By | Date | Released By | Date
Information
For Comment
For Bid
Construction

Engineering Review
Discipline | Name | Date
Mech
Elec
Civil
Arch

Approved for Construction
Date
Project Manager
Chief Mechanical Engineer

383

APPENDIX A

Summary of Test Data and Regimes

Regime Test No		1	2	3	4	5	6	7	8	9	10
Regime Description		Baseline	Baseline	O_2 Variation		OFA Variation				O_2 Variation	
		Red Load	Max Load	+% O_2	% O_2	+ OFA	+ OFA	OFA	+ OFA	% O_2	% O_2
Date	1996	10/28	10/29	10/29	10/30	10/30	10/31	10/31	10/31	11/2	11/4
Start Time	Hrs	16 05	13 08	15 38	11 44	16 14	10 30	11 43	12 22	12 48	12 16
Stop Time	Hrs	16 50	13 53	16 23	12 14	16 38	10 54	11 58	12 32	12 48	12 31
Unit Load	MW_t	390	450	450	443	447	450	455	460	415	420
Main Steam Flow	te/h	1225	1420	1425	1415	1425	1445	1445	1467	1305	1475
RH Steam Flow	te/h	950	1100	1100	1100	1100	1115	1115	1130	1080	??
FW Flow	te/h	1520	1440	1480	1750	1750	1530	1500	1490	1390	1370
Mills in Service		5	5	5	5	5	5	5	5	5	5
OFA Damper Position	%	+15	+15	+15	+15	+30	+50	0	+75	+15	+15
- Flue Gas Analysis -											
O_2 at Econ Inlet (A/B)	%	4 2 / 4 4	2 8 / 3 3	4 3 / 3 7	1 8 / 1 8	3 4 / 3 2	2 4 / 3 0	2 5 / 2 8	2 8 / 3 4	0 8 / 0 6	1 3 / 1 9
O_2 per Land Unit (A/B)	%	10 / 9	20 / 9	9 / 9	9 / 8	9 / 13	11 / 8	9 / 8	8 / 9	8 / 8	9 / 8
Nox, Composite (A/B)	PPM	467/431	43/309	325/325	244/258	248/249	278/257	309/281	272/268	238/209	251/247
CO Composite (A/B)	PPM	9 / 9	0 / 12	171 / 10	748 / 23	191 / 18	182 / 13	241 / 41	91 / 33	865 / 1469	421 / 31
SO_2 Composite (A/B)	PPM	548 /517	61 / 643	671 / 638	771 / 835	969 / 924	777 / 737	751 / 674	696 / 658	637 / 609	855 / 686

324

APPENDIX A

Summary of Test Data and Regimes

- Air/Flue Gas Temperatures -

FD Fan Inlet (A/B)	°C		25/25	30/25						25/35	25/40
SCAH Air In/Out	°C	75/	85/300	85/300	85/300	85/298	86/300	86/300	84/301	86/285	
APH Air In/Out	°C										
Econ Gas Out	°C	360	360	360	360	360	360	360	360	350	355
AH Gas Out	°C										
1/2	°C	185/170	185/175	185/175	320/365	190/185	185/170	185/170	185/175	203/202	192/185
3/4	°C	210/210	205/210	215/215	195/185	210/215	203/207	200/205	200/205	185/185	195/210
5/6	°C	195/190	200/190	200/190	210/210	200/185	198/177	200/180	200/180	180/170	197/183
7/8	°C	215/180	215/175	213/175	200/187	215/180	224/178	220/180	220/180	250/210	235/200
ESP Outlet	°C										
ID Fan Outlet (A/B)	°C	61/69	63/66	64/66	62/67	61/65	60/66	61/67	62/66	- /70	57/64
Scrubber Outlet	°C										
1/2	°C	62/62	62/62								
3/4	°C	67/70	66/65								

- Air/Flue Gas Draft -

ESP Inlet	mmH_20	320	350	350	360	337	353	350	355	355	
Scrubber Inlet		143	142	142	140	137	145	144	145	142	
Furnace		5 0/5 0	5 0	4 5	6 0/5 0	5 0/4 5	3 0	4 0	4 0	2 5	4 0
ID Fan Inlet (A/B)		355/360	330/375	330/375	320/365	325/375	350/390	340/380	345/380	275/300	320/370
ID Fan Outlet (A/B)		55/50									
Air Heater Air In/Out		820/60	880/75	900/85	860/60	850/70	850/70	820/90	820/90	740/20	800/40

APPENDIX A

Summary of Test Data and Regimes

- Pulverizers -

Pressure Drop	mmH_20											
			205/215	200/210	195/220	175/205	260/300	260/310	260/310	225/260	190/230
			200/195	250/205	240/225	210/255	- /310	- /325	- /330	210/205	280/225
			- /225	- /200	- /235	- /240	290/310	340/315	335/310	- /240	- /245
Temperature Inlet/Outlet	^0C		200/110	200/103	200/ -	200/105	200/105	205/110	200/110	180/96	210/95
Amps											
			90/85	90/85	100/90	95/90	90/90	90/90	95/90	95/90	95/90
			85/85	85/85	90/85	95/85	- /90	- /90	- /85	95/90	90/85
			- /85	- /85	- /85	- /85	95/85	95/85	90/85	- /85	- /85
Air Flow (x 10^3)	M^3/h										
		175/190	197/210	195/205	160/210	160/210	170/200	185/195	185/195	180/195	185/210
		150/ -	180/205	180/205	160/205	160/190	- /190	- /195	- /195	150/190	155/190
		175/155	- /180	- /185	- /180	- /170	210/175	180/175	190/175	- /190	- /175
PA Fan Amps											
			155/160	155/160	165/155	160/155	160/155	160/160	160/160	160/160	160/155

326

APPENDIX B

Summary of Land Emissions Data

Test No	Data Point	NOx (ppm)	NOx (mg/Nm3)	SO_2 (ppm)	SO_2 (mg/Nm3)	CO	% O_2	XS Air	XS Air Valve Position	Load (MW)	Comments
1a	1	455	933	548	1567	10	9 96	87 40	+15%	390	Normal Oper / Reduced Load
	2	451	925	547	1564	9	9 90	86 40	+15%	390	
	3	493	1011	556	1590	8	10 23	92 00	+15%	390	
	4	468	959	541	1547	7	10 00	86 70	+15%	390	
Composite	**1a**	**467**	**957**	**548**	**1567**	**9**	**10**	**88**		**390**	
1b	1	418	857	508	1453	9	9 17	75 00	+15%	390	
	2	411	843	518	1481	10	9 19	75 30	+15%	390	
	3	451	925	526	1504	9	9 54	80 60	+15%	390	
	4	443	908	516	1476	8	9 49	79 80	+15%	390	
Composite	**1b**	**431**	**883**	**517**	**1479**	**9**	**9**	**78**		**390**	
2a	1	71	146	71	203	0	20 48	595 80	+15%	448	Normal Oper / Full Load
	2	28	57	55	157	0	20 36	595 80	+15%	448	
	3	49	100	49	140	0	20 29	595 80	+15%	448	
	4	23	47	70	200	0	20 26	595 80	+15%	448	
Composite	**2a**	**43**	**88**	**61**	**175**	**0**	**20**	**596**		**448**	
2b	1	286	586	608	1739	14	8 40	64 50	+15%	448	
	2	300	615	653	1868	13	8 47	65 40	+15%	448	
	3	295	605	660	1888	12	8 39	64 30	+15%	448	
	4	354	726	652	1865	10	9 00	72 60	+15%	448	
Composite	**2b**	**309**	**633**	**643**	**1840**	**12**	**9**	**67**		**448**	
3a	1	336	689	647	1850	15	9 16	74 90	+15%	450	(+) O_2 Variation
	2	344	705	650	1859	14	9 21	75 60	+15%	450	
	3	345	707	668	1910	14	9 33	77 40	+15%	450	
	4	274	562	718	2053	639	8 68	68 10	+15%	450	
Composite	**3a**	**325**	**666**	**671**	**1918**	**171**	**9**	**74**		**450**	
3b	1	286	586	608	1739	14	8 40	64 50	+15%	450	
	2	300	615	653	1868	13	8 47	65 40	+15%	450	
	3	295	605	660	1888	12	8 39	64 30	+15%	450	
	4	354	726	652	1865	10	9 00	72 60	+15%	450	
	5	323	662	623	1782	10	8 54	66 30	+15%	450	
	6	328	672	615	1759	8	8 54	66 30	+15%	450	
Composite	**3b**	**325**	**666**	**638**	**1823**	**10**	**9**	**67**		**450**	

APPENDIX B

Summary of Land Emissions Data

Test No	Data Point	NOx (ppm)	NOx (mg/Nm3)	SO_2 (ppm)	SO_2 (mg/Nm3)	CO	% O_2	XS Air	XS Air Valve Position	Load (MW)	Comments
4a	1	259	531	851	2434	325	9 47	79 50	+15%	443	(-) O_2 Variation
	2	253	519	905	2588	717	9 66	82 50	+15%	443	
	3	247	506	906	2591	777	10 10	89 00	+15%	443	
	4	241	494	896	2563	981	10 50	97 10	+15%	443	
	5	246	504	721	2062	630	9 02	72 80	+15%	443	
	6	246	504	722	2065	631	9 02	72 80	+15%	443	
	7	242	496	744	2128	750	9 00	72 60	+15%	443	
Composite	**4a**	**244**	**500**	**771**	**2204**	**748**	**9**	**79**		**443**	
4b	1	271	556	808	2311	17	8 31	63 30	+15%	443	
	2	255	523	840	2402	28	8 11	60 80	+15%	443	
	3	257	527	845	2417	19	8 08	60 50	+15%	443	
	4	248	508	846	2420	27	7 97	59 10	+15%	443	
Composite	**4b**	**258**	**528**	**835**	**2387**	**23**	**8**	**61**		**443**	
5a	1	248	508	956	2734	297	8 94	71 70	+30%	447	(+) OFA Variation
	2	259	531	965	2760	218	9 03	73 00	+30%	447	
	3	249	510	965	2760	134	8 93	71 60	+30%	447	
	4	246	504	951	2720	120	8 90	71 20	+30%	447	
	5	239	490	995	2846	291	8 76	69 20	+30%	447	
Composite	**5a**	**248**	**509**	**969**	**2771**	**191**	**9**	**71**		**447**	
5b	1	230	472	873	2497	23	11 75	123 20	+30%	447	
	2	241	494	920	2631	19	12 19	134 30	+30%	447	
	3	245	502	916	2620	18	12 52	143 40	+30%	447	
	4	253	519	917	2623	16	12 76	150 40	+30%	447	
	5	255	523	941	2691	19	12 90	154 80	+30%	447	
Composite	**5b**	**249**	**509**	**924**	**2641**	**18**	**13**	**146**		**447**	
6a	1	290	595	704	2013	121	12 88	154 10	+50%	455	(+) OFA Variation
	2	296	607	767	2194	64	12 25	135 90	+50%	455	
	3	270	554	774	2214	243	12 24	135 60	+50%	455	
	4	279	572	791	2262	172	12 31	137 50	+50%	455	
	5	265	543	775	2217	247	8 36	64 00	+50%	455	
Composite	**6a**	**278**	**569**	**777**	**2222**	**182**	**11**	**118**		**455**	

328

APPENDIX B

Summary of Land Emissions Data

Test No	Data Point	NOx (ppm)	NOx (mg/Nm3)	SO_2 (ppm)	SO_2 (mg/Nm3)	CO	% O_2	XS Air	XS Air Valve Position	Load (MW)	Comments
6b	1	276	566	712	2036	12	8 26	62 70	+50%	455	(+) OFA Variation
	2	266	545	728	2082	13	8 25	62 60	+50%	455	
	3	253	519	736	2105	14	8 00	59 50	+50%	455	
	4	253	519	731	2091	14	8 02	59 70	+50%	455	
	5	254	521	751	2148	12	8 06	60 20	+50%	455	
Composite	**6b**	**257**	**526**	**737**	**2106**	**13**	**8**	**61**		**455**	
7a	1	331	679	722	2065	33	8 79	69 60	0%	455	(-) OFA Variation
	2	292	599	752	2151	467	8 47	65 40	0%	455	
	3	299	613	764	2185	324	8 56	66 50	0%	455	
	4	312	640	765	2188	139	8 68	68 10	0%	**455**	
Composite	**7a**	**309**	**632**	**751**	**2147**	**241**	**9**	**67**		**455**	
7b	1	312	640	639	1828	14	8 14	61 20	0%	455	
	2	264	541	669	1913	76	7 63	55 10	0%	455	
	3	269	551	690	1973	45	7 67	55 60	0%	455	
	4	278	570	696	1991	30	7 78	56 90	0%	455	
Composite	**7b**	**281**	**576**	**674**	**1926**	**41**	**8**	**57**		**455**	
8a	1	272	558	675	1931	84	8 68	68 10	+75%	460	(+) OFA Variation
	2	272	558	710	2031	114	8 64	67 60	+75%	460	
	3	265	543	724	2071	126	8 60	67 10	+75%	460	
Composite	**8a**	**272**	**558**	**696**	**1989**	**91**	**8**	**65**		**460**	
8b	1	276	566	616	1762	13	8 66	67 90	+75%	460	
	2	265	543	646	1848	12	8 49	65 60	+75%	460	
	3	259	531	675	1931	14	8 43	64 80	+75%	460	
Composite	**8b**	**268**	**550**	**658**	**1882**	**33**	**9**	**66**		**460**	
9a	1	161	330	569	1627	3400	7 88	58 10	+15%	415	(-) O_2 Variation
Composite	**9a**	**238**	**488**	**637**	**1822**	**865**	**8**	**64**		**415**	
9b	1	167	342	571	1633	1580	7 33	51 80	+15%	415	
Composite	**9b**	**209**	**428**	**609**	**1741**	**1469**	**8**	**60**		**415**	

APPENDIX B

Summary of Land Emissions Data

Test No	Sub No	NOx		SO_2		CO	% O_2	XS Air	XS Air Valve Position	Load (MW)	Comments
		(ppm)	(mg/Nm3)	(ppm)	(mg/Nm3)						
10a	1	233	478	778	2225	712	8 13	61 10	+15%	420	(-) O_2 Variation
	2	250	513	813	2325	594	8 61	67 20	+15%	420	
	3	245	502	809	2314	886	8 21	62 10	+15%	420	
	4	252	517	857	2451	319	8 95	71 80	+15%	420	
	5	260	533	881	2520	153	9 09	73 80	+15%	420	
	6	245	502	871	2491	326	8 97	72 10	+15%	420	
Composite	**10a**	**251**	**514**	**855**	**2444**	**421**	**9**	**70**		**420**	
10b	1	243	498	640	1830	35	8 02	59 70	+15%	420	
	2	244	500	678	1939	30	8 13	61 10	+15%	420	
	3	253	519	702	2008	27	8 22	62 20	+15%	420	
	4	248	508	723	2068	31	8 20	61 90	+15%	420	
Composite	**10b**	**247**	**506**	**686**	**1961**	**31**	**8**	**61**		**420**	

330

APPENDIX C

Summary of Composite Land Data

Test No	Nox (ppm)	Nox (mg/Nm^3)	SO_2 (ppm)	SO_2 (mg/Nm^3)	CO	% O_2 Land	% O_2 Plant	XS Air	OFA Valve Position	Load (MW)	Comments
1a	467	957	548	1567	9	10	4 2	88	+15%	390	Normal Oper / Reduced Load
1b	431	884	517	1479	9	9	4 4	78	+15%	390	
~~2a~~	~~43~~	~~88~~	~~61~~	~~174~~	~~0~~	~~20~~	~~2 8~~	~~596~~	~~+15%~~	448	Normal Oper / Full Load
2b	309	633	643	1839	12	9	3 3	67	+15%	448	
3a	325	666	671	1919	171	9	4 3	74	+15%	450	(+) O2 Variation
3b	325	666	638	1825	10	9	3 7	67	+15%	450	
4a	244	500	771	2205	748	9	1 8	79	+15%	443	(-) O2 Variation
4b	258	529	835	2388	23	8	1 8	61	+15%	443	
5a	248	508	969	2771	191	9	3 4	71	+30%	447	(+) OFA Variation
5b	249	510	924	2643	18	13	3 2	146	+30%	447	
6a	278	570	777	2222	182	11	2 4	118	+50%	455	(+) OFA Variation
6b	257	527	737	2108	13	8	3 0	61	+50%	455	
7a	309	633	751	2148	241	9	2 5	67	0%	455	(-) OFA Variation
7b	281	576	674	1928	41	8	2 8	57	0%	455	
8a	272	558	696	1991	91	8	2 8	65	+75%	460	(+) OFA Variation
8b	268	549	658	1882	33	9	3 4	66	+75%	460	
9a	238	488	637	1822	865	8	0 8	64	+15%	415	(-) O2 Variation
9b	209	428	609	1742	1469	8	0 6	60	+15%	415	
10a	251	515	855	2445	421	9	1 3	70	+15%	420	(-) O2 Variation
10b	247	506	686	1962	31	8	1 9	61	+15%	420	
Data Range	**209-467**	**428-957**	**517-777**	**1479-2222**	**9-1469**						

APPENDIX D

TEST 1A

```
FACHETHN R F I E
FFOTOT.FE SAMPLING
  EKIBHITUT NO 2
+++++++++++++++++++++++
+   LAND COMBUSTION   +
+     LANGOM 6500     +
+++++++++++++++++++++++
Type of fuel
   Fuel 1
Dry analysis
O2 normalisation  on
-----------------------
Date  28 10 96

Time  16 5
-----------------------
T ambient        12 C
T gas            61 C
Tg - T           49 C

CO          10 ppm
SO2        547 ppm
NO2          7 ppm
O2        9 96
NO        447 ppm
NOx       455 ppm
CO2       9 69

efficiency       91 9 %
loss              8 1
excess air       77 4
water             0 0 %
O2 norm           6 0
-----------------------
Unit No  02
```

(2)

```
FACHETHN R F I E                1A
FFOTOT.FE SAMPLING
  EKIBHITUT NO 2
+++++++++++++++++++++++
+   LAND COMBUSTION   +
+     LANGOM 6500     +
+++++++++++++++++++++++
Type of fuel
   Fuel 1
Dry analysis
O2 normalisation  on
-----------------------
Date  23 10 96

Time* 16 20
-----------------------
T ambient        11 C
T gas            61 C
Tg - Ta          50 C

CO           9 ppm
SO2        547 ppm
NO2          7 ppm
O2       9 90
NO         444 ppm
NOx        451 ppm
CO2      9 73 %

efficiency       91 9 %
loss              6.1 %
excess air       66 4 %
water             0 0 %
O2 norm           6 0
-----------------------
Unit No  02
```

```
FACHETHN R F I E                1A
FFOTOT.FE SAMPLING
  EKIBHITUT NO 2
+++++++++++++++++++++++
+   LAND COMBUSTION   +
+     LANGOM 6500     +
+++++++++++++++++++++++
Type of fuel
   Fuel 1
Dry analysis
O2 normalisation  on
-----------------------
Date  28 10 96

Time. 16 25
-----------------------
T ambient        12 C
T gas            61 C
Tg - Ta          49 C

CO           5 ppm
SO2        556 ppm
NO2          5 ppm
O2      10 27
NO         435 ppm
NOx        437 ppm
CO2      9 44

efficiency       91 9 %
loss              6 2
excess air       92.0
water             0 0
O2 norm           6 0 %
-----------------------
Unit No  02
```

```
FACHETHN R F I E                1A
FFOTOT.FE SAMPLING
  EKIBHITUT NO 2
+++++++++++++++++++++++
*   LAND COMBUSTION   +
+     LANGOM 6500     +
+++++++++++++++++++++++
Type of fuel
   Fuel 1
Dry analysis
O2 normalisation  on
-----------------------
Date  28 10 96

Time  16 50
-----------------------
T ambient        12 C
T gas            61 C
Tg - Ta          49 C

CO           7 ppm
SO2        537 ppm
NO2          7 ppm
O2       9 92
NO         457 ppm
NOx        464 ppm
CO2      9 71 %

efficiency       91 9 %
loss              8 1 %
excess air       88 7
water             0 0
O2 norm           6 0 %
-----------------------
Unit No  02
```

TEST 1B

KAZAKSTAN R E I S.
PROTOTYPE SAMPLING
EKIBASTUZ NO.2
****
* LAND COMBUSTION *
* LANCOM 6500 *
****
Type of fuel
Fuel 1
Dry analysis
O2 normalisation: on

Date 28.10 96

Time: 4'8

T ambient .	10 C
T gas	68 C
Tg - Ta	58 C
CO	9 ppm
SO2	508 ppm
NO2	8 ppm
O2	9 17 .
NO '	410 ppm
NOx	418 ppm
CO2	10 38 /
efficiency .	91 6 /
loss	8 4 /
excess air .	75 0 /
water .	0 0 /
O2 norm	6.0 /

Unit No 02

KAZAKSTAN R E I S. 1B
PROTOTYPE SAMPLING
EKIBASTUZ NO.2
****
* LAND COMBUSTION *
* LANCOM 6500 *
****
Type of fuel
Fuel 1
Dry analysis
O2 normalisation: on

Date. 28.10 96

Time' 4'23

T ambient	10 C
T gas .	69 C
Tg - Ta .	59 C
CO :	10 ppm
SO2 .	518 ppm
NO2	6 ppm
O2	9 19 /
NO	405 ppm
NOx .	411 ppm
CO2	10 36 /
efficiency	91 5 /
loss	8 5 /
excess air	75 3 /
water .	0.0 /
O2 norm	6 0 /

Unit No 02

KAZAKSTAN R.E I S 1B
PPOTOTYPE SAMPLING
EKIBASTUZ NO 2
****
* LAND COMBUSTION *
* LANCOM 6500 *
****
Type of fuel:
Fuel 1
Dry analysis
O2 normalisation. on

Date: 28 10 96

Time. 4.38

T ambient :	10 C
T gas :	69 C
Tg - Ta .	59 C
CO '	9 ppm
SO2 .	526 ppm
NO2	8 ppm
O2 .	9 54 /
NO '	443 ppm
NOx '	451 ppm
CO2	10 05 /
efficiency '	91 4 /
loss '	8 6 /
excess air '	80 6 /
water	0 0 /
O2 norm '	6.0 /

Unit No 02

KAZAKSTAN R E I.S. 1B
PROTOTYPE SAMPLING
EKIBASTUZ NO 2
****
* LAND COMBUSTION *
* LANCOM 6500 *
****
Type of fuel
Fuel 1
Dry analysis
O2 normalisation' on

Date' 28 10 96

Time: 4'53

T ambient .	10 C
T gas :	68 C
Tg - Ta :	58 C
CO :	8 ppm
SO2 '	516 ppm
NO2 :	7 ppm
O2	9 49
NO	436 ppm
NOx	443 ppm
CO2	10 09
efficiency	91 5 /
loss	8 5 /
excess air	79 8
water	0.0 /
O2 norm	6 0 /

Unit No. 02

TEST #2a
(BAD DATA)

KAZAKSTAN R.E I S
PROTOTYPE SAMPLING
EKIBASTUZ NO 2
++++++ ++++++++++++++++
+ LAND COMBUSTION +
+ LANCOM 6500 *
++++++++++++++++++++++
Type of fuel
Fuel 1
Dry analysis
O2 normalisation on

Date 29 10 96

Time 13:8

T ambient	12 C
T gas	63 C
Tg - Ta	51 C

CO	0 ppm
SO2	10 ppm
NO2	0 ppm
O2	20 45 %
NO	10 ppm
NOx	10 ppm
CO2	0 37

efficiency	10 3 %
loss	63 1 %
excess air	595 6
water	0 0 %
O2 norm	6 0

Unit No 02

2A

KAZAKSTAN R E I S
PROTOTYPE SAMPLING
EKIBASTUZ NO 2
****
* LAND COMBUSTION *
* LANCOM 6500 *
****
Type of fuel
Fuel 1
Dry analysis
O2 normalisation on

Date: 29 10 96

Time: 13:23

T ambient	12 C
T gas	64 C
Tg - Ta	52 C

CO	0 ppm
SO2	10 ppm
NO2	0 ppm
O2	20 36 %
NO	5 ppm
NOx	5 ppm
CO2	0 47 %

efficiency	27 5 %
loss	72 5 %
excess air	595 8
water	0 0 %
O2 norm	6 0 %

Unit No 02

2A

KAZAKSTAN R E I S
PROTOTYPE SAMPLING
EKIBASTUZ NO 2
****
+ LAND COMBUSTION *
+ LANCOM 6500 *
****
Type of fuel
Fuel 1
Dry analysis
O2 normalisation on

Date 29 10 96

Time. 13 38

T ambient	12 C
T gas	63 C
Tg - Ta	51 C

CO	0 ppm
SO2	10 ppm
NO2	5 ppm
O2	20 29 %
NO	5 ppm
NOx	10 ppm
CO2	0 53 %

efficiency	36 3 %
loss	63 7
excess air	595 8 %
water	0 0 %
O2 norm	6 0 %

Unit No 02

2A

KAZAKSTAN R E I S
PROTOTYPE SAMPLING
EKIBASTUZ NO 2
****
* LAND COMBUSTION *
* LANCOM 6500 *
****
Type of fuel
Fuel 1
Dry analysis
O2 normalisation on

Date. 29 10 96

Time. 13:53

T ambient	13 C
T gas	63 C
Tg - Ta	50 C

CO	0 ppm
SO2	15 ppm
NO2	5 ppm
O2	20 26 %
NO	0 ppm
NOx	5 ppm
CO2	0 56 %

efficiency	40 5 %
loss	59 5
excess air	535 2 %
water	0 0
O2 norm	6 0

Unit No 02

334

TEST # 2b

KAZAKSTAN R E.I.S.
PROTOTYPE SAMPLING
EKIBASTUZ NO 2
****
* LAND COMBUSTION *
* LANCOM 6500 *
****
Type of fuel.
Fuel 1 (6)
Dry analysis
O2 normalisation: on

Date 29 10.96

Time: 1:11

T ambient	9 C	
T gas	66 C	
Tg - Ta	57 C	
CO	14 ppm	(12)
SO2	608 ppm	(510)
NO2	0 ppm	
O2	8 40 %	
NO	286 ppm	(240)
NOx	286 ppm	(240)
CO2	11 06 %	
efficiency	91 8 %	
loss	8 2 %	
e cess air	64 5 %	
water	0 0 %	
O2 norm	6.0 %	

Unit No 02

2B

KAZAKSTAN R.E.I S
PROTOTYPE SAMPLING
EKIBASTUZ NO 2
****
* LAND COMBUSTION *
* LANCOM 6500 *
****
Type of fuel.
Fuel 1
Dry analysis
O2 normalisation: on

Date: 29 10.96

Time: 1 26

T ambient	10 C
T gas	66 C
Tg - Ta	56 C
CO	13 ppm
SO2	653 ppm
NO2	0 ppm
O2	8 47 %
NO	300 ppm
NOx	300 ppm
CO2	11 00 %
efficiency	91.9 %
loss	8 1 %
excess air	65 4 %
water	0 0 %
O2 norm	6 0 %

Unit No 02

2B

KAZAKSTAN R E.I.S.
PROTOTYPE SAMPLING
EKIBASTUZ NO.2
****
* LAND COMBUSTION *
* LANCOM 6500 *
****
Type of fuel
Fuel 1
Dry analysis
O2 normalisation: on

Date: 29 10.96

Time: 1:41

T ambient	10 C
T gas	66 C
Tg - Ta	56 C
CO	12 ppm
SO2	660 ppm
NO2	0 ppm
O2	8 39 %
NO	295 ppm
NOx	295 ppm
CO2	11 07 %
efficiency	91.9 %
loss	8.1 %
e cess air	64 3 %
water	0 0 %
O2 norm	6 0 %

Unit No 02

2B

KAZAKSTAN R E I S.
PPOTOTYPE SAMPLING
EKIBASTUZ NO 2
****
* LAND COMBUSTION *
* LANCOM 6500 *
****
Type of fuel:
Fuel 1
Dry analysis
O2 normalisation: on

Date 29 10 96

Time: 1 56

T ambient	10 C
T gas	66 C
Tg - Ta	56 C
CO	10 ppm
SO2	652 ppm
NO2	1 ppm
O2	9 00 %
NO	353 ppm
NOx	354 ppm
CO2	10 53
efficiency	91 7 %
loss	8 3
excess air	72 6 %
water	0 0 %
O2 norm	6 0 %

Unit No 02

335

TEST #3a

3A

```
LANCOM COMBUSTION
```

Type of fuel
Fuel 1
Dry analysis
O2 normalisation on

Date 29 10 96

Time 15 53

T ambient	41 C
T gas	64 C
Tg - Ta	23 C
CO	14 ppm
SO2	650 ppm
NO2	1 ppm
O2	9 21 %
NO	343 ppm
NOx	344 ppm
CO2	10 34
efficiency	93 9 %
loss	6.1 %
excess air	75 6 %
water	0 0 %
O2 norm	6 0 %

Unit No 01

3A

LANCOM COMBUSTION
LANCOM 6500

Type of fuel
Fuel 1
Dry analysis
O2 normalisation on

Date 29 10 96

Time. 16 8

T ambient	41 C
T gas	62 C
Tg - Ta	21 C
CO	14 ppm
SO2	668 ppm
NO2	1 ppm
O2	9 33
NO	344 ppm
NOx	345 ppm
CO2	10 24 %
efficiency	94 0 %
loss	6 0
excess air	77 4 %
water	0 0 %
O2 norm	6 0 %

Unit No 01

3A

LANCOM COMBUSTION
LANCOM 6500

Type of fuel
Fuel 1
Dry analysis
O2 normalisation on

Date 29 10 96

Time. 16 23

T ambient	41 C
T gas	63 C
Tg - Ta	22 C
CO	639 ppm
SO2	718 ppm
NO2	0 ppm
O2	6 66
NO	274 ppm
NOx	274 ppm
CO2	10 61
efficiency	94 0
loss	6 0
excess air	63 1
water	0 0
O2 norm	6 0 %

Unit No 01

336

TEST # 3a
(EXTRA READINGS)

```
MACHESTAN R E I E
PROTOTYPE SAMPLING
  EXIBHSTUZ NO 2
++++++++++++++++++++++
+   LAND COMBUSTION   *
+     LANCOM 6500     *
++++++++++++++++++++++
Type of fuel
   Fuel 1
Dry analysis
O2 normalisation  on
-----------------------
Date  29 10 96

Time  16 24
-----------------------
T ambient        41 C
T gas            63 C
Tg - Ta          22 C

CO        358 PPM
SO2       731 PPM
NO2         0 PPM
O2        8 54
NO        266 PPM
NOx       266 PPM
CO2      10 94

efficiency       94 0
loss              6 0
excess air       66 1
water             0 0
O2 norm           6 0
-----------------------
Unit No  02
```

3A

```
MACHESTAN R E I E
PROTOTYPE SAMPLING
  EXIBHSTUZ NO 2
**********************
*   LAND COMBUSTION   *
*     LANCOM 6500     *
**********************
Type of fuel
   Fuel 1
Dry analysis
O2 normalisation' on
-----------------------
Date  29 10 96

Time  16 24
-----------------------
T ambient        40 C
T gas            63 C
Tg - Ta          23 C

CO        976 PPM
SO2       730 PPM
NO2         0 PPM
O2        8 52
NO        266 PPM
NOx       266 PPM
CO2      10 94

efficiency       94 0 ′
loss              6 0
excess air       66 1
water             0 0
O2 norm           6 0
-----------------------
Unit No  02
```

3A

```
MACHESTAN R E I E
PROTOTYPE SAMPLING
  EXIBHSTUZ NO 2
**********************
*   LAND COMBUSTION   *
*     LANCOM 6500     *
**********************
Type of fuel
   Fuel 1
Dry analysis
O2 normalisation  on
-----------------------
Date  29 10 96

Time  16 24
-----------------------
T ambient        41 C
T gas            63 C
Tg - Ta          22 C

CO        993 PPM
SO2 .     731 PPM
NO2         0 PPM
O2        8 53
NO        266 PPM
NO        266 PPM
CO2      10 94

efficiency       94 0 ′
loss              6 0 ′
excess air       66 1
water             0 0
O2 norm           6 0
-----------------------
Unit No  02
```

3A

```
MACHESTAN R E I E
PROTOTYPE SAMPLING
  EXIBHSTUZ NO 2
**********************
*   LAND COMBUSTION   *
*     LANCOM 6500     *
**********************
Type of fuel
   Fuel 1
Dry analysis
O2 normalisation  on
-----------------------
Date  29 10 96

Time  16 24
-----------------------
T ambient        41 C
T gas            63 C
Tg - Ta          22 C

CO       1001 PPM
SO2       731 PPM
NO2         0 PPM
O2        8 52
NO        266 PPM
NOx       266 PPM
CO2      10 94

efficiency       94 0
loss              6 0
excess air       66 1
water             0 0
O2 norm           6 0
-----------------------
Unit No  02
```

TEST #3B

KAZAKSTAN P E I S
FROTOTYPE SAMPLING
EKIBASTUZ NO 2
****
* LAND COMBUSTION *
* LANCOM 6500 *
****
Type of fuel
Fuel 1
Dry analysis
O2 normalisation: on

Date: 29 10 96

Time: 4:40

T ambient 13 C
T gas : 68 C
Tg - Ta : 55 C

CO : 10 ppm
SO2 623 ppm
NO2 : 1 ppm
O2 : 8 54 %
NO 322 ppm
NOx 323 ppm
CO2 10 94 %

efficiency : 91.9 %
loss 8 1 %
excess air : 66.3 %
water : 0 0 %
O2 norm 6 0 %

Unit No 02

(INTERRUPTED DUE TO FILTER)

KAZAKSTAN R E I S 3B
PROTOTYPE SAMPLING
EKIBASTUZ NO 2
****
* LAND COMBUSTION *
* LANCOM 6500 *
****
Type of fuel:
Fuel 1
Dry analysis
O2 normalisation: on

Date: 29 10 96

Time. 4:55

T ambient : 12 C
T gas : 68 C
Tg - Ta : 56 C

CO : 8 ppm
SO2 : 615 ppm
NO2 : 1 ppm
O2 : 8.54 %
NO 327 ppm
NOx 328 ppm
CO2 : 10 94 %

efficiency : 91.9 %
loss : 8.1 %
excess air : 66 3 %
water : 0 0 %
O2 norm 6 0 %

Unit No 02

TEST 4A

KAZAKSTAN R E I S
PROTOTYPE SAMPLING
EKIBASTUZ NO 2
****
* LAND COMBUSTION *
* LANCOM 6500 *
****
Type of fuel
Fuel 1
Dry analysis
O2 normalisation on

Date 30 10 96

Time ~~0.49~~ ≈ 11:44

T ambient	13	C
T gas	62	C
Tg - Ta	49	C
CO	325	ppm
SO2	851	ppm
NO2	0	ppm
O2	9 47	%
NO	259	ppm
NOx	259	ppm
CO2	10 11	%
efficiency	92.1	%
loss	7 9	%
excess air	79.5	%
water	0 0	%
O2 norm	6 0	%

Unit No. 02

4A

KAZAKSTAN R E I S
PROTOTYPE SAMPLING
EKIBASTUZ NO 2
****
* LAND COMBUSTION *
* LANCOM 6500 *
****
Type of fuel
Fuel 1
Dry analysis
O2 normalisation: on

Date. 30 10 96

Time. ~~0.59~~

T ambient	13	C
T gas	62	C
Tg - Ta	49	C
CO	717	ppm
SO2	905	ppm
NO2	0	ppm
O2	9.66	%
NO	253	ppm
NOx	253	ppm
CO2	9 94	%
efficiency	92.0	%
loss	8 0	%
excess air	82.5	%
water	0 0	%
O2 norm	6 0	%

Unit No 02

4A

KAZAKSTAN R E I S
PROTOTYPE SAMPLING
EKIBASTUZ NO 2
****
* LAND COMBUSTION *
* LANCOM 6500 *
****
Type of fuel
Fuel 1
Dry analysis
O2 normalisation: on

Date: 30.10 96

Time: ~~1:9~~

T ambient	13	C
T gas	63	C
Tg - Ta	50	C
CO	777	ppm
SO2	906	ppm
NO2	0	ppm
O2	10 06	%
NO	247	ppm
NOx	247	ppm
CO2	9.59	%
efficiency	91 8	%
loss	8.2	%
excess air	89 0	%
water	0 0	%
O2 norm	6 0	%

Unit No 02

4A

KAZAKSTAN P E I S
PROTOTYPE SAMPLING
EKIBASTUZ NO 2
****
* LAND COMBUSTION *
* LANCOM 6500 *
****
Type of fuel
Fuel 1
Dry analysis
O2 normalisation: on

Date: 30 10 96

Time: ~~1.19~~

T ambient	13	C
T gas	63	C
Tg - Ta	50	C
CO	981	ppm
SO2	896	ppm
NO2	0	ppm
O2	10 51	%
NO	241	ppm
NOx	241	ppm
CO2	9 19	%
efficiency	91 7	%
loss	8 3	%
excess air	97 1	%
water	0 0	%
O2 norm	6 0	%

Unit No 02

PROBLEM CHECK ON FAN "A" (USED LAND UNIT #2) 4A

```
PACHASTHAN P L I
PROTOTYPE SAMPLING
  EXHAUSTUS NO 2
*********************
*  LAND COMBUSTION  *
*     LANCOM 6500   *
*********************
Type of fuel
   Fuel 1
Dry analysis
O2 normalisation  on
---------------------
Date  30 10 96

Time  12 29
---------------------
T ambient       42 C
T gas           62 C
Tg - Ta         20 C

CO        630 PPM
SO2       721 PPM
NO2         0 PPM
O2        9 02
NO        246 PPM
NO        246 PPM
CO2     10 51

efficiency      94 1
loss             5 9
e cess air      72 9
water            1 0
O2 norm          6 0
--- --   --- ----------
Unit N   02
```

(USING LAND UNIT #2) 4A

```
PACHASTHAN P L I
PROTOTYPE SAMPLING
  EXHAUSTUS NO 2
*********************
*  LAND COMBUSTION  *
*     LANCOM 6500   *
*********************
Type of fuel
   Fuel 1
Dry analysis
O2 normalisation  on
---------------------
Date  30 10 96

Time  12 29
---------------------
T ambient       42 C
T gas           62 C
Tg - Ta         20 C

CO        721 PPM
SO2       721 PPM
NO2         0 PPM
O2        9 02
NO        246 PPM
NOx       246 PPM
CO2     10 51

efficiency      94 1
loss             5 9
excess air      72.9
water            0 0
O2 norm          6 0
---------------------
Unit No  02
```

(USING LAND UNIT #2) 4A

```
PACHASTHAN P L I
PROTOTYPE SAMPLING
  EXHAUSTUS NO 2
*********************
*  LAND COMBUSTION  *
*     LANCOM 6500   *
*********************
Type of fuel
   Fuel 1
Dry analysis
O2 normalisation  on
---------------------
Date  30 10 96

Time. 12 30
---------------------
T ambient       42 C
T gas           62 C
Tg - Ta         20 C

CO        750 PPM
SO2       744 ppm
NO2         0 ppm
O2        9.00
NO        242 PPM
NOx       247 PPM
CO2     10 53

efficiency      94 1
loss             5 9
e cess air      72 6
water            0 0
O2 norm          6 0
--------------- -----
Unit No  02
```

32

TEST 4B

```
MACHESTAN F E I S
FROTOTYPE SAMPLING
  EXTERNETUS NO 2
*********************
*   LAND COMBUSTION   *
*     LANCOM 6500     *
*********************
Type of fuel
   Heavy Fuel Oil
Wet analysis
O2 normalisation  off
---------------------
Date  30 10 96

Time  11 44
---------------------
T ambient        40 C
T gas            66 C
Tg - Ta          26 C

CO          14 ppm
SO2        892 ppm
NO2          0 ppm
O2        8.31
NO        229 ppm
NO        229 ppm
CO2      11 14

efficiency       93 8
loss              6 2
excess air       67 1
water             0 0
O2 norm           8 0
---------------------
Unit No  02
```

4B

```
MACHESTAN F E I S
PROTOTYPE SAMPLING
  EXTERNETUS NO 2
*********************
*   LAND COMBUSTION   *
*     LANCOM 6500     *
*********************
Type of fuel
   Fuel 1
Dry analysis
O2 normalisation: on
---------------------
Date  30 10 96

Time. 11.54
---------------------
T ambient        41 C
T gas            67 C
Tg - Ta          26 C

CO          28 ppm
SO2 .      840 ppm
NO2          0 ppm
O2        6.11
NO        255 ppm
NOx       255 ppm
CO2      11 32

efficiency       93 8 %
loss              6 2 %
excess air .     60 8
water             0 0 %
O2 norm           6 0 %
---------------------
Unit No  02
```

4B

```
MACHESTAN F E I S
PROTOTYPE SAMPLING
  EXTERNETUS NO 2
*********************
*   LAND COMBUSTION   *
*     LANCOM 6500     *
*********************
Type of fuel
   Fuel 1
Dry analysis
O2 normalisation  on
---------------------
Date  30 10 96

Time. 12.4
---------------------
T ambient        41 C
T gas            66 C
Tg - Ta          25 C

CO          19 ppm
SO2        845 ppm
NO2 .        0 ppm
O2  .    8.09
NO  .      257 ppm
NOx        257 ppm
CO2      11 34

efficiency       93 9 %
loss              6 1 %
excess air       60 5 %
water             0 0 %
O2 norm           6 0 %
---------------------
Unit No  02
```

4B

```
MACHESTAN F E I S
PROTOTYPE SAMPLING
  EXTERNETUS NO 2
*********************
*   LAND COMBUSTION   *
*     LANCOM 6500     *
*********************
Type of fuel
   Fuel 1
Dry analysis
O2 normalisation  on
---------------------
Date  30 10 96

Time  12 14
---------------------
T ambient        41 C
T gas            67 C
Tg - Ta          26 C

CO          27 ppm
SO2 .      346 ppm
NO2          0 ppm
O2        7.97 %
NO        248 ppm
NOx       243 ppm
CO2      11 44 %

efficiency       92 3
loss              6 1
excess air       53 1
water             0 0
O2 norm           6 0
---------------------
Unit No  02
```

TEST #5A

KAZAKSTAN F E I S
PROTOTYPE SAMPLING
EKIBASTUZ NO 2

```
+++++++++++++++++++++++
+   LAND COMBUSTION   +
+     LANCOM 6500     +
+++++++++++++++++++++++
```

Type of fuel
Fuel 1
Dry analysis
O2 normalisation on

Date 30 10 96

Time. 16 14

T ambient	45 C
T gas	61 C
Tg - Ta	16 C

CO	297 ppm
SO2	356 ppm
NO2	0 ppm
O2	8 34 %
NO	248 ppm
NOx	248 ppm
CO2	10 59 %

efficiency	94 4 %
loss	5 6 %
excess air	71 7 %
water	0 0
O2 norm	6 0 %

Unit No 02

5A

KAZAKSTAN F E I S
PROTOTYPE SAMPLING
EKIBASTUZ NO 2

```
+++++++++++++++++++++++
+   LAND COMBUSTION   +
+     LANCOM 6500     +
+++++++++++++++++++++++
```

Type of fuel
Fuel 1
Dry analysis
O2 normalisation on

Date 30 10 96

Time• 16•20

T ambient	44 C
T gas	61 C
Tg - Ta	17 C

CO	218 ppm
SO2	965 ppm
NO2	0 ppm
O2	9 03
NO	259 ppm
NOx	259 ppm
CO2	10 50 %

efficiency	94 3 %
loss	5 7 %
excess air	72 0 %
water	0 0
O2 norm	6 0 %

Unit No 02

5A

KAZAKSTAN F E I S
PROTOTYPE SAMPLING
EKIBASTUZ NO 2

```
+++++++++++++++++++++++
+   LAND COMBUSTION   +
+     LANCOM 6500     +
+++++++++++++++++++++++
```

Type of fuel
Fuel 1
Dry analysis
O2 normalisation on

Date 30 10 96

Time 16 26

T ambient	45 C
T gas	62 C
Tg - Ta	17 C

CO	134 ppm
SO2	965 ppm
NO2	0 ppm
O2	8 93
NO	249 ppm
NOx	249 ppm
CO2	10 59

efficiency	94 3
loss	5 7
excess air	71 6
water	0 0 %
O2 norm	6 0 %

Unit No 02

5A

PACHASTAN F L I S
PROTOTYPE SAMPLING
EXIDHAUST NO 1
++++++++++++ ++++++++++
* LAND COMBUSTION *
* LANCOM 6500 *
++++++++++++++++++++++

Type of fuel
Fuel 1
Dry analysis
O2 normalisation on

Date 30 10 96

Time 16 32

T ambient	45	C
T gas	62	C
Tg - Ta	17	C
CO	120	ppm
SO2	951	ppm
NO2	0	ppm
O2	8 90	
NO	246	ppm
NOx	246	ppm
CO2	10 62	%
efficiency	94 3	%
loss	5 7	
excess air	71 2	%
water	0 0	
O2 norm	6 0	

Unit No 02

5A

PACHASTAN F L I S
PROTOTYPE SAMPLING
EXTERNAL NO 2
++++++++++++++++++++++
* LAND COMBUSTION *
* LANCOM 6500 *
++++++++++++++++++++++

Type of fuel
Fuel 1
Dry analysis
O2 normalisation on

Date 30 10 96

Time 16 38

T ambient	45	C
T gas	61	C
Tg - Ta	16	C
CO	291	ppm
SO2	995	ppm
NO2	0	ppm
O2	8 76	
NO	239	ppm
NOx	239	ppm
CO2	10 74	%
efficiency	94 4	%
loss	5 6	%
excess air	69 1	
water	0 0	
O2 norm	6 0	

Unit No 02

TEST #5B

KAZAKSTAN R E I S
PPOTOT(PE SAMPLING
EKIBASTUZ NO 2
****
* LAND COMBUSTION *
* LANCOM 6500 *
****
Type of fuel
Fuel 1
Dry analysis
O2 normalisation' on

Date 30 10 96

Time 4/8 10

T ambient ' 15 C
T gas 64 C
Tg - Ta . 49 C

CO ' 23 ppm
SO2 873 ppm
NO2 . 0 ppm
O2 ' 11.75 %
NO . 230 ppm
NOx ' 230 ppm
CO2 8 09 %

efficiency ' 91 3 %
loss 8 7 %
excess air 123 2 %
water 0 0 %
O2 norm 6 0 %

Unit No 02

5B

KAZAKSTAN R.E I S
PROTOTYPE SAMPLING
EKIBASTUZ NO 2
****
* LAND COMBUSTION *
* LANCOM 6500 *
****
Type of fuel
Fuel 1
Dry analysis
O2 normalisation: on

Date. 30.10 96

Time: 4/8·16

T ambient : 16 C
T gas : 65 C
Tg - Ta . 49 C

CO : 19 ppm
SO2 ' 920 ppm
NO2 . 0 ppm
O2 12 19 %
NO 241 ppm
NOx : 241 ppm
CO2 : 7 70 %

efficiency : 91.1 %
loss 8 9 %
excess air ' 134 3 %
water 0 0 %
O2 norm ' 6 0 %

Unit No 02

5B

KAZAKSTAN P E I S
PPOTOTYPE SAMPLING
EKIBASTUZ NO 2
****
* LAND COMBUSTION *
* LANCOM 6500 *
****
Type of fuel:
Fuel 1
Dry analysis
O2 normalisation' on

Date: 30 10 96

Time: 4/8 22

T ambient . 15 C
T gas . 65 C
Tg - Ta ' 50 C

CO ' 18 ppm
SO2 916 ppm
NO2 . 0 ppm
O2 12.52
NO . 245 ppm
NOx : 245 ppm
CO2 . 7 41

efficiency 90 9 %
loss . 9 1 %
excess air 143 4 %
water 0 0 %
O2 norm 6 0

Unit No. 02

5B

KAZAKSTAN R E I S
PROTOTYPE SAMPLING
EKIBASTUZ NO 1
****
* LAND COMBUSTION *
* LANCOM 6500 *
****
Type of fuel
Fuel 1
Dry analysis
O2 normalisation. on

Date. 30 10 96

Time: 12:28

T ambient . 15 C
T gas : 65 C
Tg - Ta 50 C

CO : 16 ppm
SO2 : 917 ppm
NO2 . 0 ppm
O2 : 12 76 %
NO 253 ppm
NOx . 253 ppm
CO2 . 7 20 %

efficiency : 90.8 %
loss : 9.2 %
excess air 150 4 %
water . 0 0 %
O2 norm : 6 0 %

Unit No. 02

(SO2 Level went over 1000PPM Following Test Readings)

5B

KAZAKSTAN R E I S
PROTOTYPE SAMPLING
EKIBASTUZ NO 2
****
* LAND COMBUSTION *
* LANCOM 6500 *
****
Type of fuel
Fuel 1
Dry analysis
O2 normalisation: on

Date. 30.10 96

Time. 12:34

T ambient 16 C
T gas : 64 C
Tg - Ta : 48 C

CO : 19 ppm
SO2 : 941 ppm
NO2 : 0 ppm
O2 : 12 90 %
NO 255 ppm
NOx . 255 ppm
CO2 . 7 08 %

efficiency . 90.9 %
loss . 9 1 %
excess air : 154.8 %
water 0 0 %
O2 norm . 6 0 %

Unit No 02

TEST #6A

KAZAKSTAN R E I S
PROTOTIPE SAMPLING
EKIBASTUZ NO 2
****
* LAND COMBUSTION *
* LANCOM 6500 *
****
Type of fuel
Fuel 1
Dry analysis
O2 normalisation on

Date 31 10 96

Time 10 30

T ambient	42	C
T gas	59	C
Tg - Ta	17	C
CO	121	ppm
SO2	704	ppm
NO2	2	ppm
O2	12 68	
NO	268	ppm
NOx	230	ppm
CO2	7 03	
efficiency	93 3	%
loss	6 2	
excess air	154 1	
water	0 0	
O2 norm	6 0	

High O2 due to leak at catalyst

Unit No 02

6A

KAZAKSTAN R E I S
PROTOTIPE SAMPLING
EKIBASTUZ NO 2
****
* LAND COMBUSTION *
* LANCOM 6500 *
****
Type of fuel
Fuel 1
Dry analysis
O2 normalisation on

Date 31 10 96

Time: 10 36

T ambient	43	C
T gas	60	C
Tg - Ta	17	C
CO	64	ppm
SO2	767	ppm
NO2	2	ppm
O2	12 25	
NO	235	ppm
NOx	296	ppm
CO2	7 65	
efficiency	93 9	%
loss	6 1	%
excess air	135 9	
water	0 0	
O2 norm	6 0	%

Unit No 02

6A

KAZAKSTAN R E.I S
PROTOTIPE SAMPLING
EKIBASTUZ NO 2
****
* LAND COMBUSTION *
* LANCOM 6500 *
****
Type of fuel
Fuel 1
Dry analysis
O2 normalisation: on

Date. 31 10 96

Time 10 42

T ambient :	43	C
T gas :	61	C
Tg - Ta .	18	C
CO :	247	ppm
SO2	774	ppm
NO2	0	ppm
O2	12 24	%
NO	270	ppm
NO	270	ppm
CO2	7 66	
efficiency	93 8	
loss	6 2	
excess air	135 8	
water	0 0	
O2 norm	6 0	

Unit No 02

6A

PROTOTYPE SAMPLING
EXHAUSTED NO 2

```
*********************
+  LAND COMBUSTION  +
*    LANCOM 6500    *
*********************
```

Type of fuel
Fuel 1
Dry analysis
O2 normalisation on

Date 31 10 96

Time 10 48

T ambient	43	C
T gas	61	C
Tg - Ta	18	C
CO	172	ppm
SO2	791	ppm
NO2	0	ppm
O2	12 31	%
NO	279	ppm
NOx	279	ppm
CO2	7 60	%
efficiency	93 8	%
loss	6 2	%
excess air	137 5	%
water	0 0	%
O2 norm	6 0	%

Unit No 02

6A

PROTOTYPE SAMPLING
EXHAUSTED NO 2

```
*********************
+  LAND COMBUSTION  +
*    LANCOM 6500    *
*********************
```

Type of fuel
Fuel 1
Dry analysis
O2 normalisation on

Date 31 10 96

Time 10 54

T ambient	43	C
T gas	60	C
Tg - Ta	17	C
CO	247	ppm
SO2	775	ppm
NO2	0	ppm
O2	8 36	%
NO	265	ppm
NOx	265	ppm
CO2	11 10	
efficiency	94 3	
loss	5 7	%
excess air	64 0	%
water	0 0	%
O2 norm	6 0	

Unit No 02

CATCHPOT LEAK CORRECTED

TEST 6B

KAZAKSTAN R E I S
PROTOTYPE SAMPLING
EKIBASTUZ NO 2
****
* LAND COMBUSTION *
* LANCOM 6500 *
****
Type of fuel
Fuel 1
Dry analysis
O2 normalisation: on

Date. 31 10 96

Time 10.32

T ambient	14	C
T gas	66	C
Tg - Ta	52	C
CO	12	ppm
SO2	712	ppm
NO2	1	ppm
O2	8.26	%
NO	275	ppm
NOx	276	ppm
CO2	11 18	%
efficiency	92.2	%
loss	7.8	%
excess air	62.7	%
water	0 0	%
O2 norm	6 0	%

Unit No 02

6B

KAZAKSTAN R E I S
PROTOTYPE SAMPLING
EKIBASTUZ NO 2
****
* LAND COMBUSTION *
* LANCOM 6500 *
****
Type of fuel
Fuel 1
Dry analysis
O2 normalisation: on

Date 31.10 96

Time: 10'38

T ambient	13	C
T gas	66	C
Tg - Ta	53	C
CO	13	ppm
SO2	728	ppm
NO2	0	ppm
O2	8.25	%
NO	266	ppm
NOx	266	ppm
CO2	11 19	%
efficiency	92.1	%
loss	7.9	%
excess air	62 6	%
water	0 0	%
O2 norm	6 0	%

Unit No 02

6B

KAZAKSTAN R E I S
PROTOTYPE SAMPLING
EKIBASTUZ NO 2
****
* LAND COMBUSTION *
* LANCOM 6500 *
****
Type of fuel
Fuel 1
Dry analysis
O2 normalisation: on

Date: 31 10.96

Time: 10'44

T ambient	14	C
T gas	67	C
Tg - Ta	53	C
CO	14	ppm
SO2	736	ppm
NO2	0	ppm
O2	8 00	%
NO	253	ppm
NOx	253	ppm
CO2	11.41	%
efficiency	92 2	%
loss	7.8	%
excess air	59 5	%
water	0 0	%
O2 norm	6 0	%

Unit No 02

6B

KAZAKSTAN R E I S
PROTOT\PE SAMPLING
EKIBASTUZ NO 2
****
* LAND COMBUSTION *
* LANCOM 6500 *
****
Type of fuel
Fuel 1
Dry analysis
O2 normalisation: on

Date 31 10 96

Time 10 50

T ambient :	14	C
T gas :	67	C
Tg - Ta :	53	C
CO	14	ppm
SO2	731	ppm
NO2	0	ppm
O2 :	8 02	%
NO	253	ppm
NOx	253	ppm
CO2	11.40	%
efficiency	92 2	%
loss	7 9	%
excess air :	59 7	%
water	0 0	%
O2 norm	6 0	%

Unit No 02

6B

KAZAKSTAN R E I S
PPOTOTYPE SAMPLING
EKIBHSTUZ NO.2
****
* LAND COMBUSTION *
* LANCOM 6500 *
****
Type of fuel:
Fuel 1
Dry analysis
O2 normalisation: on

Date: 31 10 96

Time: 10.56

T ambient :	14	C
T gas :	67	C
Tg - Ta	53	C
CO :	12	ppm
SO2 :	751	ppm
NO2 :	0	ppm
O2 :	8 06	%
NO :	254	ppm
NOx :	254	ppm
CO2	11 36	%
efficiency	92 2	%
loss :	7 8	%
e\cess air :	60 2	%
uater	0 0	%
O2 norm	6 0	%

Unit No 02

349

[TEST #7A]

[illegible]
[illegible]
[illegible]
[illegible]
[illegible]
[illegible]
Type of fuel
Fuel 1
Dry analysis
O2 normalisation: on

Date 31 10 96

Time 11 43

T ambient	45 C
T gas	61 C
Tg - Ta	16 C

CO	[illegible] ppm
SO2	[illegible] ppm
NO2	[illegible] ppm
O2	9.79
NO	[illegible] ppm
NOx	[illegible] ppm
CO2	10 71

efficiency	94 4
loss	5 6 %
excess air	63 6
water	0 0 %
O2 norm	6 0

Unit No 02

7A

KAZAKSTAN F E I S
PROTOTYPE SAMPLING
EKIBASTUZ NO 2
****
* LAND COMBUSTION *
* LANCOM 6500 *
****
Type of fuel
Fuel 1
Dry analysis
O2 normalisation: on

Date 31 10 96

Time 11 49

T ambient	44 C
T gas	61 C
Tg - Ta	17 C

CO	467 ppm
SO2	752 ppm
NO2	1 ppm
O2	8.47 %
NO	291 ppm
NOx	292 ppm
CO2	11 00 %

efficiency	94 3 %
loss	5 7 %
excess air	65 4 %
water	0 0 %
O2 norm	6 0 %

Unit No 02

7A

KAZAKSTAN F E I S
PROTOTYPE SAMPLING
EKIBASTUZ NO 2
****
* LAND COMBUSTION *
* LANCOM 6500 *
****
Type of fuel
Fuel 1
Dry analysis
O2 normalisation: on

Date. 31 10 96

Time: 11 55

T ambient	44 C
T gas	62 C
Tg - Ta	18 C

CO	324 ppm
SO2	764 ppm
NO2	1 ppm
O2	8 56
NO	298 ppm
NOx	299 ppm
CO2	10 92

efficiency	94 3 %
loss	5 7 %
excess air	66 5 %
water	0 0 %
O2 norm	6 0

Unit No 02

7A

KAZAKSTAN F E I S
PROTOTYPE SAMPLING
EKIBASTUZ NO 2
****
* LAND COMBUSTION *
* LANCOM 6500 *
****
Type of fuel
Fuel 1
Dry analysis
O2 normalisation on

Date 31 10 96

Time 11 58

T ambient	45 C
T gas	62 C
Tg - Ta	17 C

CO	139 ppm
SO2	765 ppm
NO2	1 ppm
O2	8 63 %
NO	311 ppm
NOx	312 ppm
CO2	10 81

efficiency	94 [illegible]
loss	5 7
excess air	69 1
water	0 0
O2 norm	6 0

Unit No 02

TEST # 7B

7B

KAZAKSTAN R E I S
PROTOTYPE SAMPLING
EKIBASTUZ NO 2
++++++++++++++++++++++
+ LAND COMBUSTION +
+ LANCOM 6500 +
++++++++++++++++++++++
Type of fuel
Fuel 1
Dry analysis
O2 normalisation on

Date 31 10 96

Time 11 44

T ambient	14 C
T gas	67 C
Tg - Ta	53 C
CO	14 ppm
SO2	639 ppm
NO2	1 ppm
O2	6 14
NO	311 ppm
NOx	312 ppm
CO2	11 29 %
efficiency	92 1 %
loss	7 9 %
excess air	61 2 %
water	0 0 %
O2 norm	6 0 %

Unit No 02

7B

KAZAKSTAN R E I S
PROTOTYPE SAMPLING
EKIBASTUZ NO 2
++++++++++++++++++++++
+ LAND COMBUSTION +
+ LANCOM 6500 +
++++++++++++++++++++++
Type of fuel
Fuel 1
Dry analysis
O2 normalisation on

Date 31 10 96

Time 11 50

T ambient	14 C
T gas	67 C
Tg - Ta	53 C
CO	76 ppm
SO2	669 ppm
NO2	0 ppm
O2	7 63 %
NO	264 ppm
NOx	264 ppm
CO2	11 74 %
efficiency	92.3 %
loss	7 7 %
excess air	55 1 %
water	0 0 %
O2 norm	6 0 %

Unit No 02

7B

KAZAKSTAN R E I S
PROTOTYPE SAMPLING
EKIBASTUZ NO 2
++++++++++++++++++++++
+ LAND COMBUSTION +
+ LANCOM 6500 +
++++++++++++++++++++++
Type of fuel.
Fuel 1
Dry analysis
O2 normalisation. on

Date 31.10 96

Time 11 56

T ambient	14 C
T gas	67 C
Tg - Ta	53 C
CO	45 ppm
SO2	690 ppm
NO2	0 ppm
O2	7.67 %
NO	269 ppm
NOx	269 ppm
CO2	11 71 %
efficiency	92.2 %
loss	7.9 %
excess air	55 6 %
water	0 0 %
O2 norm	6 0 %

Unit No 02

7B

KAZAKSTAN R E I S.
PROTOTYPE SAMPLING
EKIBASTUZ NO 2
++++++++++++++++++++++
+ LAND COMBUSTION +
+ LANCOM 6500 +
++++++++++++++++++++++
Type of fuel
Fuel 1
Dry analysis
O2 normalisation on

Date. 31 10.96

Time 11 58

T ambient	14 C
T gas	69 C
Tg - Ta	54 C
CO	30 ppm
SO2	696 ppm
NO2	0 ppm
O2	7 78 %
NO	278 ppm
NOx	278 ppm
CO2	11 61 %
efficiency	92 2 %
loss	7 3
excess air	56 9 %
water	0 0
O2 norm	6 0 %

Unit No 02

TEST 8A

KAZAKSTAN P E I S
PROTOTYPE SAMPLING
EKIBASTUZ NO 2
++++++++++++++++++++++
+ LAND COMBUSTION +
+ LANCOM 6500 +
++++++++++++++++++++++
Type of fuel
Fuel 1
Dry analysis
O2 normalisation on

Date 31 10 96

Time 12 22

T ambient	44 C
T gas	62 C
Tg - Ta	18 C

CO	54 PPM
SO2	675 PPM
NO2	1 PPM
O2	8 69
NO	271 PPM
NOx	272 PPM
CO2	10 21

efficiency	94 3
loss	5 7 %
excess air	62 1 %
water	0 0
O2 norm	6 0

Unit No 02

8A

KAZAKSTAN P E I S
PROTOTYPE SAMPLING
EKIBASTUZ NO 2
****
* LAND COMBUSTION *
* LANCOM 6500 *
****
Type of fuel
Fuel 1
Dry analysis
O2 normalisation on

Date 31 10 96

Time. 12 32

T ambient	46 C
T gas	62 C
Tg - Ta	16 C

CO	126 PPM
SO2	724 PPM
NO2	0 PPM
O2	8 60 %
NO	265 PPM
NOx	265 PPM
CO2	10 55

efficiency	94 4
loss	5 6
excess air	67 1
water	0 0
O2 norm	6 0

Unit No 02

TEST # 8A

KAZAKSTAN P E I S
PROTOTYPE SAMPLING
EKIBASTUZ NO 2
****
* LAND COMBUSTION *
* LANCOM 6500 *
****
Type of fuel
Fuel 1
Dry analysis
O2 normalisation on

Date 31 10 96

Time 12 27

T ambient	44 C
T gas	62 C
Tg - Ta	18 C

CO	114 PPM
SO2	710 PPM
NO2	0 PPM
O2	8 64
NO	272 PPM
NOx	272 PPM
CO2	10 25

efficiency	94 3
loss	5 7
excess air	67 6
water	0 0
O2 norm	6 0 %

Unit No 02

TEST # 8B

KAZAKSTAN R E I S
PROTOTYPE SAMPLING
EKIBASTUZ NO 2
++++++++++++++++++++++++
* LAND COMBUSTION *
* LANCOM 6500 *
++++++++++++++++++++++++
Type of fuel
Fuel 1
Dry analysis
O2 normalisation on

Date 31 10 96

Time 12:24

T ambient	15 C
T gas	66 C
Tg - Ta	51 C
CO	13 ppm
SO2	616 ppm
NO2	1 ppm
O2	8 66 %
NO	275 ppm
NOx	276 ppm
CO2	10 83 %
efficiency	92 1 %
loss	7 9 %
excess air	67.9 %
water	0 0 %
O2 norm	6 0 %

Unit No 02

8B

KAZAKSTAN R E I S
PROTOTYPE SAMPLING
EKIBASTUZ NO 2
++++++++++++++++++++++++
* LAND COMBUSTION *
* LANCOM 6500 *
++++++++++++++++++++++++
Type of fuel.
Fuel 1
Dry analysis
O2 normalisation: on

Date. 31 10 96

Time. 12.29

T ambient	15 C
T gas	65 C
Tg - Ta	50 C
CO	12 ppm
SO2	646 ppm
NO2	0 ppm
O2	8 49 %
NO	265 ppm
NOx	265 ppm
CO2	10.98 %
efficiency	92 2 %
loss	7 8 %
excess air	65.6 %
water	0 0 %
O2 norm	6 0 %

Unit No 02

8B

KAZAKSTAN R E I S
PROTOTYPE SAMPLING
EKIBASTUZ NO 2
++++++++++++++++++++++++
* LAND COMBUSTION *
* LANCOM 6500 *
++++++++++++++++++++++++
Type of fuel
Fuel 1
Dry analysis
O2 normalisation: on

Date: 31.10 96

Time: 12:34

T ambient	15 C
T gas	67 C
Tg - Ta	52 C
CO	14 ppm
SO2	675 ppm
NO2	0 ppm
O2	8 43 %
NO	259 ppm
NOx	259 ppm
CO2	11 03 %
efficiency	92 1 %
loss	7 9 %
excess air	64 6 %
water	0 0
O2 norm	6 0 %

Unit No 02

TEST 9A

KAZAKSTAN R E I S
PROTOTYPE SAMPLING
EKIBASTUZ NO.2
****
* LAND COMBUSTION *
* LANCOM 6500 *
****
Type of fuel
Fuel 1
Dry analysis
O2 normalisation on

Date 2 11 96

Time 12 48

T ambient	40 C
T gas	13 C
Tg - Ta	-27 C
CO	2000 ppm
SO2	569 ppm
NO2	0 ppm
O2	7 88 %
NO	161 ppm
NOx	161 ppm
CO2	11 52 %
efficiency	96 9 %
loss	3 1 %
excess air	58 1 %
water	0 0
O2 norm	6 0

Unit No 02

TEST 9B

KAZAKSTAN R E I.S
PROTOTYPE SAMPLING
EKIBASTUZ NO.2
****
* LAND COMBUSTION *
* LANCOM 6500 *
****
Type of fuel.
Fuel 1
Dry analysis
O2 normalisation on

Date 2 11 96

Time 12.51

T ambient	11 C
T gas	70 C
Tg - Ta	59 C
CO	1588 ppm
SO2	571 ppm
NO2	0 ppm
O2	7 33 %
NO	167 ppm
NOx	167 ppm
CO2	12.01 %
efficiency	92 0 %
loss	8 0 %
excess air	51 3 %
water	0 0 %
O2 norm	6 0 %

Unit No 02

TEST 10A (Modified)

KAZAKSTAN R E I S
PROTOTYPE SAMPLING
EKIBASTUZ NO 2
++++++++++++++++++++++
+ LAND COMBUSTION +
* LANCOM 6500 *
++++++++++++++++++++++
Type of fuel
Fuel 1
Dry analysis
O2 normalisation on

Date 4 11 96

Time 12 33

T ambient	44	C
T gas	57	C
Tg - Ta	13	C

CO	712	ppm
SO2	775	ppm
NO2	0	ppm
O2	8 17	
NO	225	ppm
NOx	255	ppm
CO2	11 30	

efficiency	94 6	%
loss	5 4	%
excess air	61 1	%
water	0 0	%
O2 norm	6 0	%

Unit No 02

KAZAKSTAN R E I S. 10A
PROTOTYPE SAMPLING
EKIBASTUZ NO 2
****
* LAND COMBUSTION *
* LANCOM 6500 *
****
Type of fuel
Fuel 1
Dry analysis
O2 normalisation on

Date 4 11 96

Time: 12 34

T ambient .	44	C
T gas	57	C
Tg - Ta	13	C

CO	594	ppm
SO2	313	ppm
NO2	0	ppm
O2	8 61	
NO	250	ppm
NOx	250	ppm
CO2	10 37	

efficiency	94 6	%
loss	5 4	%
excess air	67 2	%
water :	0 0	%
O2 norm	6 0	%

Unit No 02

KAZAKSTAN R E I S 10A
PROTOTYPE SAMPLING
EKIBASTUZ NO 2
****
* LAND COMBUSTION *
* LANCOM 6500 *
****
Type of fuel.
Fuel 1
Dry analysis
O2 normalisation on

Date 4 11 96

Time: 12 35

T ambient .	43	C
T gas	57	C
Tg - Ta .	14	C

CO .	886	ppm
SO2	809	ppm
NO2	0	ppm
O2	8 21	
NO .	245	ppm
NOx	245	ppm
CO2	11 27	

efficiency	94 5	
loss	5 5	
excess air	61 1	
water	0 0	
O2 norm	6 0	

Unit No 02

35

PAKISTAN P E I S 10A
PROTOTYPE SAMPLING
EXPERIMENT NO 2
****
* LAND COMBUSTION *
* LANCOM 6500 *
****
Type of fuel
Fuel 1
Dry analysis
O2 normalisation on

Date 4 11 86

Time. 12 36

T ambient	44	C
T gas	57	C
Tg - Ta	13	C
CO	319	ppm
SO2	857	ppm
NO2	0	ppm
O2	8 95	%
NO	252	ppm
NOx	252	ppm
CO2	10 57	%
efficiency	94.5	%
loss	5 5	%
excess air	71 8	%
water	0 0	%
O2 norm	6 0	%

Unit No 02

PAKISTAN P E I S 10A
PROTOTYPE SAMPLING
EXPERIMENT NO 2
****
* LAND COMBUSTION *
* LANCOM 6500 *
****
Type of fuel
Fuel 1
Dry analysis
O2 normalisation on

Date 4 11 86

Time 12 39

T ambient	44	C
T gas	57	C
Tg - Ta	13	C
CO	326	ppm
SO2	871	ppm
NO2	0	ppm
O2	8 97	%
NO	245	ppm
NOx	245	ppm
CO2	10 56	%
efficiency	94 5	%
loss	5 5	%
excess air	72 1	%
water	0 0	%
O2 norm	6 0	%

Unit No 02

TEST 10B

```
KAZAKSTAN R E I S
PROTOTYPE SAMPLING
  EKIBASTUZ NO 2
**********************
*   LAND COMBUSTION    *
*     LANCOM 6500      *
**********************
Type of fuel
   Fuel 1
Dry analysis
O2 normalisation: on
----------------------
Date  4 11 96

Time  12:16
----------------------
T ambient :     14 C
T gas           64 C
Tg - Ta         50 C

CO  :      35 ppm
SO2       640 ppm
NO2         0 ppm
O2  .    8.02 %
NO  :     243 ppm
NOx .     243 ppm
CO2    11 40 %

efficiency :   92 3 %
loss       :    7 7 %
excess air     59.7 %
water      .    0 0 %
O2 norm    :    6 0 %
----------------------
Unit No  02
```

```
KAZAKSTAN R E I S   10B
PROTOTYPE SAMPLING
  EKIBASTUZ NO 2
**********************
*   LAND COMBUSTION    *
*     LANCOM 6500      *
**********************
Type of fuel.
   Fuel 1
Dry analysis
O2 normalisation: on
----------------------
Date: 4 11 96

Time: 12.21
----------------------
T ambient .     14 C
T gas     .     63 C
Tg - Ta   :     49 C

CO  :      30 ppm
SO2       678 ppm
NO2 :       0 ppm
O2       8.13 %
NO  .     244 ppm
NOx :     244 ppm
CO2 :   11 30 %

efficiency :   92.4 %
loss       .    7.6 %
excess air     61.1 %
water          0 0 %
O2 norm    :    6 0 %
----------------------
Unit No  02
```

```
KAZAKSTAN R E I S   10B
PROTOTYPE SAMPLING
  EKIBASTUZ NO 2
**********************
*   LAND COMBUSTION    *
*     LANCOM 6500      *
**********************
Type of fuel.
   Fuel 1
Dry analysis
O2 normalisation: on
----------------------
Date. 4.11 96

Time: 12:26
----------------------
T ambient .     14 C
T gas     :     64 C
Tg - Ta   :     50 C

CO  :      27 ppm
SO2       702 ppm
NO2         0 ppm
O2  .    8.22 %
NO  :     253 ppm
NOx .     253 ppm
CO2    11 22 %

efficiency :   92.3 %
loss           7 7 %
excess air .   62 2 %
water          0 0 %
O2 norm    :    6 0 %
----------------------
Unit No  02
```

SYSTEM REPORT 10/31 (A.M) (UNIT No 1)

[illegible]

[illegible]

Version No 6500 V2 16S

Options
PRINTER
SERIAL PORT
ANALOGUE O/P
DATA LOG
PRESSURE TRANSDUCER
CONT MONITORING

Ranges
CO LOW 2000
SO2 1000
NO2 100
O2 25
NO 1000

Gains
CO LOW 1447
SO2 2651
NO2 -14249
NO -2741

Zeros
CO LOW 0 003 V
SO2 -0 006 V
NO2 0 000 V
O2 -4 047 V
NO 0 012 V

ppm days
CO LOW 66
SO2 141
NO2 45
NO 99

Cell battery volts
7 363 V

SYSTEM REPORT (AM) 10/31 (UNIT No 2)

****
Module No 3E60804

Version No. 6500 V2 16S

Options:
PRINTER
SERIAL PORT
ANALOGUE O/P
DATA LOG
PRESSURE TRANSDUCER
CONT MONITORING

Ranges:
CO LOW 2000
SO2 1000
NO2 100
O2 25
NO 1000

Gains:
CO LOW 1346
SO2 2924
NO2 -15458
NO -2652

Zeros.
CO LOW 0.006 V
SO2 0 000 V
NO2 0 000 V
O2 -4 077 V
NO -0.015 V

ppm.days:
CO LOW 83
SO2 142
NO2 45
NO 99

Cell battery volts:
7 401 V

SYSTEM REPORT

++++++++++++++++++++++++
Module No 3E60804
Version No 6500 V2 16S
(UNIT No. 2 (11/1/96)

Options
PRINTER
SERIAL PORT
ANALOGUE O/P
DATA LOG
PRESSURE TRANSDUCER
CONT MONITORING

Ranges
CO LOW 2000
SO2 1000
NO2 100
O2 25
NO 1000

Gains.
CO LOW 1457
SO2 2017
NO2 -14349
NO -2750

Zeros
CO LOW 0.003 V
SO2 -0 019 V
NO2 0 000 V
O2 -4 055 V
NO -0 012 V

ppm.days
CO LOW 76
SO2 170
NO2 45
NO 114

Cell battery volts:
7 390 V

SYSTEM REPORT

****
Module No . 3E60804

Version No 6500 V2 16S
LAND UNIT # 2 (11/1/96)

Options.
PRINTER
SERIAL PORT
ANALOGUE O/P
DATA LOG
PRESSURE TRANSDUCER
CONT MONITORING

Ranges.
CO LOW 2000
SO2 1000
NO2 100
O2 25
NO 1000

Gains:
CO LOW 1416
SO2 2778
NO2 -15458
NO -2634

Zeros
CO LOW 0 004 V
SO2 0 000 V
NO2 0.000 V
O2 -4 017 V
NO -0 013 V

ppm days:
CO LOW 88
SO2 173
NO2 45
NO 114

Cell battery volts:
7 380 V

APPENDIX I

EkibastuzGres 2, Boiler #2
Prototype Facility Testing Program

Summary of Coal Analyses

	Sample 1	Sample 2	Sample 3
Date	28-Oct-96	29-Oct-96	29-Oct-96
Water *, %	1 97	0 99	1 45
Ash*, %	44 01	48 00	49 02
Ash, % (4 91% H20)	42 6901	46 0996	47 29895
LHV* ,kcal/kg	4070	3771	3624
LHV (4 91 % H2O)	3798 924	3430 03	3300 257
Nitrogen*, %	1 37	1 45	1 30
Sulfur*, %	0 35	0 49	0 33
Sulfur (4 91 % H2O)	0 339503	0 4753	0 320103
Volatiles, %	30 91	32 99	33 07
* Air Dried			
Expected SO2, lb/mmBTU	0 993	1 540	1 078
Expected SO2, ppm (6% O2)	426	661	462
Expected SO2, mg/Nm3	1220	1892	1324

Additional Coal Samples

Date	Test #	H2O, %	Ash, %	LHV, kcal/kg
28-Oct-96		4 1	42 3	3840
29-Oct-96	1	5 3	46 1	3462
29-Oct-96	2	4 7	47 4	3293
30-Oct-96	1	5 0	47 7	3219
30-Oct-96	2	5 3	45 4	3506
31-Oct-96	1	5 2	46 1	3480
31-Oct-96	2	4 8	45 0	3502
Average H2O, %		4 91		

APPENDIX I

Test 1 Reduced Normal Load (390 Mw 5 mills 3% excess O2 Overfire Air at 15% open)

Fan A

DATE	HR S	MIN	SEC	TAMB	TGAS	CO	CO	SO2	SO2	NO2	NO2	O2	NO	NO	NOX	NOX	CO2	EFF	LOSS	XS_AIR	H2O	NORM	ANAL	O2_NOR	Norm Ftr	FUEL
10/28/96	16	5	43	12	61	7	10	402	548	6	8	9 96	328	447	334	455	9 68	91 9	8 1	87 4	0 0	6 0	DRY	ON	1 36	6
10/28/96	16	20	43	11	61	7	9	404	547	5	7	9 90	328	444	333	451	9 73	91 9	8 1	86 4	0 0	6 0	DRY	ON	1 35	6
10/28/96	16	35	43	12	61	6	8	398	556	6	8	10 23	347	485	353	493	9 44	91 8	8 2	92 0	0 0	6 0	DRY	ON	1 40	6
10/28/96	16	50	43	12	61	5	7	396	541	5	7	10 00	337	461	342	468	9 71	91 9	8 1	86 7	0 0	6 0	DRY	ON	1 37	6

Fan B

DATE	HR S	MIN	SEC	TAMB	TGAS	CO	CO	SO2	SO2	NO2	NO2	O2	NO	NO	NOX	NOX	CO2	EFF	LOSS	XS_AIR	H2O	NORM	ANAL	O2_NOR	Norm Ftr	FUEL
10/28/96	4	8	4	10	68	7	9	400	508	6	8	9 17	323	410	329	418	10 38	91 6	8 4	75 0	0 0	6 0	DRY	ON	1 27	6
10/28/96	4	23	4	10	69	8	10	407	518	5	6	9 19	318	405	323	411	10 36	91 5	8 5	75 3	0 0	6 0	DRY	ON	1 27	6
10/28/96	4	38	4	10	69	7	9	401	526	6	8	9 54	338	443	344	451	10 05	91 4	8 6	80 6	0 0	6 0	DRY	ON	1 31	6
10/28/96	4	53	4	10	68	6	8	395	516	5	7	9 49	334	436	339	443	10 09	91 5	8 5	79 8	0 0	6 0	DRY	ON	1 31	6

Test 2 Full Normal Load (450 MW 5 mills 3% excess O2 Overfire air at 15% open)

Fan A

DATE	HR S	MIN	SEC	TAMB	TGAS	CO	CO	SO2	SO2	NO2	NO2	O2	NO	NO	NOX	NOX	CO2	EFF	LOSS	XS_AIR	H2O	NORM	ANAL	O2_NOR	Norm Ftr	FUEL
10/29/96	13	8	33	12	63	0	0	2	71	0	0	20 48	2	71	2	71	0 37	10 9	89 1	595 8	0 0	6 0	DRY	ON	35 48	6
10/29/96	13	23	33	12	64	0	0	2	55	0	0	20 36	1	28	1	28	0 47	27 5	72 5	595 8	0 0	6 0	DRY	ON	27 59	6
10/29/96	13	38	33	12	63	0	0	2	49	1	24	20 29	1	24	2	49	0 53	36 3	63 7	595 8	0 0	6 0	DRY	ON	24 43	6
10/29/96	13	53	33	13	63	0	0	3	70	1	23	20 26	0	0	1	23	0 56	40 5	59 5	595 8	0 0	6 0	DRY	ON	23 28	6

Fan B

DATE	HR S	MIN	SEC	TAMB	TGAS	CO	CO	SO2	SO2	NO2	NO2	O2	NO	NO	NOX	NOX	CO2	EFF	LOSS	XS_AIR	H2O	NORM	ANAL	O2_NOR	Norm Ftr	FUEL
10/29/96	1	11	19	9	66	12	14	510	608	0	0	8 40	240	286	240	286	11 06	91 8	8 2	64 5	0 0	6 0	DRY	ON	1 19	6
10/29/96	1	26	19	10	66	11	13	545	653	0	0	8 47	250	300	250	300	11 00	91 9	8 1	65 4	0 0	6 0	DRY	ON	1 20	6
10/29/96	1	41	19	10	66	10	12	554	660	0	0	8 39	248	295	248	295	11 07	91 9	8 1	64 3	0 0	6 0	DRY	ON	1 19	6
10/29/96	1	56	19	10	66	8	10	521	652	1	1	9 00	282	353	283	354	10 53	91 7	8 3	72 6	0 0	6 0	DRY	ON	1 25	6

APPENDIX I

Test 3 Full Normal Load (Excess O2 increase to 3 5%)

Fan A

DATE	HR S	MIN	SEC	TAMB	TGAS	CO	CO	SO2	SO2	NO2	NO2	O2	NO	NO	NOX	NOX	CO2	EFF	LOSS	XS_AIR	H2O	NORM	ANAL	O2_NOR	Norm Ftr	FUEL
10/29/96	15	38	35	41	64	12	15	510	647	2	3	9 16	263	334	265	336	10 39	93 9	6 1	74 9	0 0	6 0	DRY	ON	1 27	
10/29/96	15	53	35	41	64	11	14	510	650	1	1	9 21	269	343	270	344	10 34	93 9	6 1	75 6	0 0	6 0	DRY	ON	1 27	
10/29/96	16	8	35	41	62	11	14	519	668	1	1	9 33	267	344	268	345	10 24	94 0	6 0	77 4	0 0	6 0	DRY	ON	1 29	
10/29/96	16	23	35	41	63	524	639	589	718	0	0	8 68	225	274	225	274	10 81	94 0	6 0	68 1	0 0	6 0	DRY	ON	1 22	

Fan B

DATE	HR S	MIN	SEC	TAMB	TGAS	CO	CO	SO2	SO2	NO2	NO2	O2	NO	NO	NOX	NOX	CO2	EFF	LOSS	XS_AIR	H2O	NORM	ANAL	O2_NOR	Norm Ftr	FUEL
10/29/96	1	11	19	9	66	12	14	510	608	0	0	8 40	240	286	240	286	11 06	91 8	8 2	64 5	0 0	6 0	WET	OFF	1 19	
10/29/96	1	26	19	10	66	11	13	545	653	0	0	8 47	250	300	250	300	11 00	91 9	8 1	65 4	0 0	6 0	DRY	ON	1 20	
10/29/96	1	41	19	10	66	10	12	554	660	0	0	8 39	248	295	248	295	11 07	91 9	8 1	64 3	0 0	6 0	DRY	ON	1 19	
10/29/96	1	56	19	10	66	8	10	521	652	1	1	9 00	282	353	283	354	10 53	91 7	8 3	72 6	0 0	6 0	DRY	ON	1 25	
10/29/96	4	40	37	13	68	8	10	517	623	1	1	8 54	267	322	268	323	10 94	91 9	8 1	66 3	0 0	6 0	DRY	ON	1 21	
10/29/96	4	55	37	12	68	7	8	510	615	1	1	8 54	271	327	272	328	10 94	91 9	8 1	66 3	0 0	6 0	DRY	ON	1 21	

Test 4 Full Normal Load (Excess O2 reduced to 2%)

Fan A

DATE	HR S	MIN	SEC	TAMB	TGAS	CO	CO	SO2	SO2	NO2	NO2	O2	NO	NO	NOX	NOX	CO2	EFF	LOSS	XS_AIR	H2O	NORM	ANAL	O2_NOR	Norm Ftr	FUEL
10/30/96	0	49	9	13	62	249	325	653	851	0	0	9 47	199	259	199	259	10 11	92 1	7 9	79 5	0 0	6 0	DRY	ON	1 30	6
10/30/96	0	59	9	13	62	541	717	683	905	0	0	9 66	191	253	191	253	9 94	92 0	8 0	82 5	0 0	6 0	DRY	ON	1 33	6
10/30/96	1	9	9	13	63	565	779	659	909	0	0	10 10	180	248	180	248	9 59	91 8	8 2	89 0	0 0	6 0	DRY	ON	1 38	6
10/30/96	1	19	9	13	63	684	980	625	895	0	0	10 50	168	241	168	241	9 19	91 7	8 3	97 1	0 0	6 0	DRY	ON	1 43	6

Additional readings taken using Land Unit #2 to check for possible problem with Land Unit #1

10/30/96	12	29	45	42	62	502	630	575	721	0	0	9 02	196	246	196	246	10 51	94 1	5 9	72 8	0 0	6 0	DRY	ON	1 25	6
10/30/96	12	29	46	42	62	503	631	576	722	0	0	9 02	196	246	196	246	10 51	94 1	5 9	72 8	0 0	6 0	DRY	ON	1 25	6
10/30/96	12	30	32	42	62	599	750	594	744	0	0	9 00	193	242	193	242	10 53	94 1	5 9	72 6	0 0	6 0	DRY	ON	1 25	6

Fan B

DATE	HR S	MIN	SEC	TAMB	TGAS	CO	CO	SO2	SO2	NO2	NO2	O2	NO	NO	NOX	NOX	CO2	EFF	LOSS	XS_AIR	H2O	NORM	ANAL	O2_NOR	Norm Ftr	FUEL
10/30/96	11	44	19	40	66	14	17	683	808	0	0	8 31	229	271	229	271	11 14	93 8	6 2	63 3	0 0	6 0	WET	OFF	1 18	2
10/30/96	11	54	19	41	67	24	28	721	840	0	0	8 11	219	255	219	255	11 32	93 8	6 2	60 8	0 0	6 0	DRY	ON	1 16	6
10/30/96	12	4	19	41	66	16	19	727	845	0	0	8 08	221	257	221	257	11 34	93 9	6 1	60 5	0 0	6 0	DRY	ON	1 16	6
10/30/96	12	14	19	41	67	23	27	734	846	0	0	7 97	215	248	215	248	11 44	93 8	6 2	59 1	0 0	6 0	DRY	ON	1 15	6

APPENDIX I

Test 5 Full Normal Load (Overfire Air valve at 50% open)

Fan A

DATE	HRS	MIN	SEC	TAMB	TGAS	CO	CO	SO2	SO2	NO2	NO2	O2	NO	NO	NOX	NOX	CO2	EFF	LOSS	XS_AIR	H2O	NORM	ANAL	O2_NOR	Norm Ftr	FUEL
10/30/96	16	14	33	45	61	238	297	767	956	0	0	8 94	199	248	199	248	10 58	94 4	5 6	71 7	0 0	6 0	DRY	ON	1 25	
10/30/96	16	20	33	44	61	174	218	769	965	0	0	9 03	206	259	206	259	10 50	94 3	5 7	73 0	0 0	6 0	DRY	ON	1 26	
10/30/96	16	26	33	45	62	108	134	775	965	0	0	8 93	200	249	200	249	10 59	94 3	5 7	71 6	0 0	6 0	DRY	ON	1 24	
10/30/96	16	32	33	45	62	97	120	766	951	0	0	8 90	198	246	198	246	10 62	94 3	5 7	71 2	0 0	6 0	DRY	ON	1 24	
10/30/96	16	38	33	45	61	237	291	811	995	0	0	8 76	195	239	195	239	10 74	94 4	5 6	69 2	0 0	6 0	DRY	ON	1 23	

Fan B

DATE	HRS	MIN	SEC	TAMB	TGAS	CO	CO	SO2	SO2	NO2	NO2	O2	NO	NO	NOX	NOX	CO2	EFF	LOSS	XS_AIR	H2O	NORM	ANAL	O2_NOR	Norm Ftr	FUEL
10/30/96	5	10	41	15	64	14	23	536	873	0	0	11 75	141	230	141	230	8 09	91 3	8 7	123 2	0 0	6 0	DRY	ON	1 63	
10/30/96	5	16	41	16	65	11	19	538	920	0	0	12 19	141	241	141	241	7 70	91 1	8 9	134 3	0 0	6 0	DRY	ON	1 71	
10/30/96	5	22	41	15	65	10	18	515	916	0	0	12 52	138	245	138	245	7 41	90 9	9 1	143 4	0 0	6 0	DRY	ON	1 78	
10/30/96	5	28	41	15	65	9	16	501	917	0	0	12 76	138	253	138	253	7 20	90 8	9 2	150 4	0 0	6 0	DRY	ON	1 83	
10/30/96	5	34	41	16	64	10	19	505	941	0	0	12 90	137	255	137	255	7 08	90 9	9 1	154 8	0 0	6 0	DRY	ON	1 86	

Test 6 Full Normal Load (Overfire Air valve at 30% open)

Fan A

DATE	HRS	MIN	SEC	TAMB	TGAS	CO	CO	SO2	SO2	NO2	NO2	O2	NO	NO	NOX	NOX	CO2	EFF	LOSS	XS_AIR	H2O	NORM	ANAL	O2_NOR	Norm Ftr	FUEL
10/31/96	10	30	4	42	59	65	121	379	704	1	2	12 88	155	288	156	290	7 09	93 8	6 2	154 1	0 0	6 0	DRY	ON	1 86	0
10/31/96	10	36	4	43	60	37	64	445	767	1	2	12 25	171	295	172	296	7 65	93 9	6 1	135 9	0 0	6 0	DRY	ON	1 72	6
10/31/96	10	42	4	43	61	141	243	450	774	0	0	12 24	157	270	157	270	7 66	93 8	6 2	135 6	0 0	6 0	DRY	ON	1 72	6
10/31/96	10	48	3	43	61	99	172	456	791	0	0	12 31	161	279	161	279	7 60	93 8	6 2	137 5	0 0	6 0	DRY	ON	1 73	6
10/31/96	10	54	3	43	60	208	247	652	775	0	0	8 36	223	265	223	265	11 10	94 3	5 7	64 0	0 0	6 0	DRY	ON	1 19	6

Fan B

DATE	HRS	MIN	SEC	TAMB	TGAS	CO	CO	SO2	SO2	NO2	NO2	O2	NO	NO	NOX	NOX	CO2	EFF	LOSS	XS_AIR	H2O	NORM	ANAL	O2_NOR	Norm Ftr	FUEL
10/31/96	10	32	4	14	66	10	12	604	712	1	1	8 26	233	275	234	276	11 18	92 2	7 8	62 7	0 0	6 0	DRY	ON	1 18	0
10/31/96	10	38	3	13	66	11	13	618	728	0	0	8 25	226	266	226	266	11 19	92 1	7 9	62 6	0 0	6 0	DRY	ON	1 18	6
10/31/96	10	44	3	14	67	12	14	637	736	0	0	8 00	219	253	219	253	11 41	92 2	7 8	59 5	0 0	6 0	DRY	ON	1 16	6
10/31/96	10	50	3	14	67	12	14	632	731	0	0	8 02	219	253	219	253	11 40	92 2	7 8	59 7	0 0	6 0	DRY	ON	1 16	6
10/31/96	10	56	3	14	67	10	12	647	751	0	0	8 06	219	254	219	254	11 36	92 2	7 8	60 2	0 0	6 0	DRY	ON	1 16	6

362

APPENDIX I

Test 7 Full Normal Load (Overfire Air valve closed)

Fan A

DATE	HR S	MIN	SEC	TAMB	TGAS	CO	CO	SO2	SO2	NO2	NO2	O2	NO	NO	NOX	NOX	CO2	EFF	LOSS	XS_AIR	H2O	NORM	ANAL	O2_NOR	Norm Ftr	FUEL
10/31/96	11	43	39	45	61	27	33	587	722	2	2	8 79	267	329	269	331	10 71	94 4	5 6	69 6	0 0	6 0	DRY	ON	1 23	6
10/31/96	11	49	39	44	61	390	467	627	752	1	1	8 47	243	291	244	292	11 00	94 3	5 7	65 4	0 0	6 0	DRY	ON	1 20	6
10/31/96	11	55	39	44	62	268	324	633	764	1	1	8 56	247	298	248	299	10 92	94 3	5 7	66 5	0 0	6 0	DRY	ON	1 21	6
10/31/96	11	58	30	45	62	114	139	627	765	1	1	8 68	255	311	256	312	10 81	94 3	5 7	68 1	0 0	6 0	DRY	ON	1 22	6

Fan B

DATE	HR S	MIN	SEC	TAMB	TGAS	CO	CO	SO2	SO2	NO2	NO2	O2	NO	NO	NOX	NOX	CO2	EFF	LOSS	XS_AIR	H2O	NORM	ANAL	O2_NOR	Norm Ftr	FUEL
10/31/96	11	44	26	14	67	12	14	547	639	1	1	8 14	266	311	267	312	11 29	92 1	7 9	61 2	0 0	6 0	DRY	ON	1 17	6
10/31/96	11	50	27	14	67	68	76	596	669	0	0	7 63	235	264	235	264	11 74	92 3	7 7	55 1	0 0	6 0	DRY	ON	1 12	6
10/31/96	11	56	26	14	67	40	45	613	690	0	0	7 67	239	269	239	269	11 71	92 2	7 8	55 6	0 0	6 0	DRY	ON	1 13	6
10/31/96	11	58	54	14	68	26	30	613	696	0	0	7 78	245	278	245	278	11 61	92 2	7 8	56 9	0 0	6 0	DRY	ON	1 14	6

Test 8 Full Normal Load (Overfire Air valve at 75% open)

Fan A

DATE	HR S	MIN	SEC	TAMB	TGAS	CO	CO	SO2	SO2	NO2	NO2	O2	NO	NO	NOX	NOX	CO2	EFF	LOSS	XS_AIR	H2O	NORM	ANAL	O2_NOR	Norm Ftr	FUEL
10/31/96	12	22	39	44	62	69	84	554	675	1	1	8 68	222	271	223	272	10 81	94 3	5 7	68 1	0 0	6 0	DRY	ON	1 22	6
10/31/96	12	27	39	44	62	94	114	584	710	0	0	8 64	224	272	224	272	10 85	94 3	5 7	67 6	0 0	6 0	DRY	ON	1 22	6
10/31/96	12	32	39	46	62	104	126	598	724	0	0	8 60	219	265	219	265	10 88	94 4	5 6	67 1	0 0	6 0	DRY	ON	1 21	6

Fan B

DATE	HR S	MIN	SEC	TAMB	TGAS	CO	CO	SO2	SO2	NO2	NO2	O2	NO	NO	NOX	NOX	CO2	EFF	LOSS	XS_AIR	H2O	NORM	ANAL	O2_NOR	Norm Ftr	FUEL
10/31/96	12	24	48	15	66	11	13	506	616	1	1	8 66	226	275	227	276	10 83	92 1	7 9	67 9	0 0	6 0	DRY	ON	1 22	6
10/31/96	12	29	47	15	65	10	12	538	646	0	0	8 49	221	265	221	265	10 98	92 2	7 8	65 6	0 0	6 0	DRY	ON	1 20	6
10/31/96	12	34	47	15	67	12	14	565	675	0	0	8 43	217	259	217	259	11 03	92 1	7 9	64 8	0 0	6 0	DRY	ON	1 19	6