PD ABP-528

95038

Central and Eastern Europe Regional Energy Efficiency Project EUR-0030-C-00-2053-00

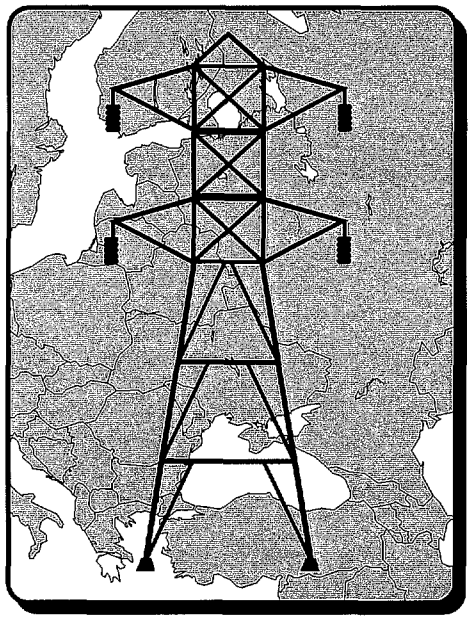

Energy Pricing, Energy Efficiency, and Energy Sector Restructuring Component

Final Report
December 1996

Volume XIV

Prepared for:
U.S. Agency for International Development
Bureau for Europe and NIS
Office of Environment, Energy, and Urban Development
Energy and Infrastructure Division

Prepared by:
Hagler Bailly Consulting, Inc.
1530 Wilson Blvd., Suite 900
Arlington, VA 22209
(703) 351-0300

CONTENTS

Volume I
Baltics: Assistance to EBRD on Project Development
Baltics: Lithuania DSM/IRP
Baltics: Equipment Procurement

Volume II
Baltics: Electric Power Contracting and Pricing
Regional: Invitational Travel and AEE Conference - 1992
Regional: Invitational Travel and AEE Conference - 1993

Volume III
Regional: Invitational Travel and AEE Conference - 1994
Regional: Invitational Travel and AEE Conference - 1995

Volume IV
Regional: Invitational Travel and AEE Conference - 1996
Regional Energy Efficiency Conference Hungary, 1995

Volume V
Follow-Up to Emergency Industrial Energy Efficiency
Regional Support to AEE Chapters

Volume VI
Regional: CEM Training Program
Poland: Energy Restructuring

Volume VII
Poland: DSM

Volume VIII
Poland: Private Power/Legal
Poland: Electricity Tariffs
Poland: IRP
Poland: Power Pricing

Volume IX
Poland: World Bank Support
Bulgaria: Electricity Action Plan

Volume X
Bulgaria: Energy Efficiency Market Development

Volume XI
Bulgaria: Equipment Procurement
Bulgaria: Private Power
Bulgaria: Energy Legal/Regulatory
Slovakia: ESCO Development & EPC Financing

Volume XII
Hungary: Energy Efficiency Market Development

Volume XIII
Hungary: Energy Office
Hungary: Equipment Procurement

Volume XIV and Volume XV
Romania: Energy Efficiency Market Development

Volume XVI
Romania: Equipment Procurement
Macedonia: Industrial Energy Efficiency
Macedonia: Private Power

CENTRAL AND EASTERN EUROPE
REGIONAL ENERGY EFFICIENCY PROJECT
EUR-0030-C-00-2053-00

Energy Pricing, Energy Efficiency, and
Energy Sector Restructuring Component

Romania
Energy Efficiency Market Development

Task Completion Memorandum

Prepared for:

U.S. Agency for International Development
Bureau for Europe and NIS
Office of Environment, Energy,
and Urban Development
Energy and Infrastructure Division

Prepared by:

Hagler Bailly Consulting, Inc.
1530 Wilson Boulevard, Suite 900
Arlington, VA 22209
(703) 351-0300

September 1996

4

CENTRAL AND EASTERN EUROPE
REGIONAL ENERGY EFFICIENCY PROJECT

Task Completion Memorandum

Romania - Energy Efficiency Market Development

Summary Task Description

The Romania Energy Efficiency Market Development (EEMD) task is designed to serve as a catalyst to assist private Romanian firms to develop a market for energy efficiency services, and to develop their capability to serve this market.

The major activities in the Romania EEMD task are:

1. Training in energy efficiency for private sector engineers on market-oriented business subjects (such as management, accounting, economics and finance), energy audit techniques, hands-on use of energy efficiency monitoring equipment, performance contracting, project management, industrial management, quality, maintenance and optimization, marketing and management for energy efficiency service companies, and a certification examination (Certified Energy Manager by Association of Energy Engineers, AEE).

2. Establishment of a Romanian chapter of AEE, supply of US energy audit equipment to the Romanian AEE, and assistance to develop AEE as a sustainable market-oriented professional association.

3. Energy management programs in representative Romanian facilities, predominantly industrial enterprises. Each program will include advice in energy management from Romanian experts, an energy audit report, and a grant to be applied as cost-sharing toward the purchase of US equipment. Hagler Bailly will serve as advisor on project, participating in on-site activities and reviewing the work of the Romanian experts. Each client enterprise will sign a contract to participate in the program, and will pay a market-based fee to the Romanian consultants for the services. Hagler Bailly's services will be at no cost to the client enterprise.

5

4. Conference and exhibition on industrial energy management. Project results will be reported to Romanian plant directors, chief engineers, production managers, and energy managers in a conference, with related publicity. US manufacturers of energy efficiency equipment will be invited to exhibit products.

5. Assistance preliminary to financing for industrial energy efficiency investment projects. Hagler Bailly will provide seminars, information, promotion, market surveys, or studies to assist efforts in Romania to arrange financing through conventional and innovative sources.

6. Establish an information resource data base for energy efficiency equipment and services of US manufacturers and suppliers. The data base will be established in conjunction with the Center for Small and Medium Business Enterprise in Bucharest.

Specific Goals and Objectives

The general goal and objective of the EEMD project will be to serve as a catalyst to accelerate the development of a market for an energy efficiency industry in Romania, and to assist firms in the private sector to develop their capability to serve this market.

The specific objectives of the EEMD project are:

1. Foster the development and capability of Romanian private firms to provide energy efficiency services, equipment, and financing to industrial clients;

2. Assess the climate for investments in energy efficiency projects in Romania, and provide advice, studies, and seminars to promote increased private investment in energy efficiency;

3. Improve energy efficiency in specific pilot sites (especially industrial enterprises), through provision of energy audits and energy-saving equipment;

4. Expand Romanian-U.S. technical and commercial ties through linkages between energy efficiency associations, engineering and energy service companies, and equipment suppliers.

Expected Outputs

There will be six major activities in the EEMD project:

1. <u>Training in energy efficiency for private sector engineers</u>

2. <u>Establishment of a Romanian chapter of AEE</u>

3. Energy management programs in approximately 10 facilities, predominantly industrial enterprises

4. Conference and exhibition on industrial energy management

5. Assistance preliminary to financing for industrial energy efficiency investment projects

6. Establish data base of US manufacturers.

Deliverables

- trip reports to AID
- monthly progress reports to AID
- energy audit training curriculum to AID
- energy audit training course materials to trainees - books, lecture notes
- advisory reports to energy auditors
- energy audit reports (in Romanian) to AID, with summary of major findings in English
- energy audit equipment package (AEE Chapter)
- energy efficiency equipment for each plant
- cd-rom information system
- energy efficiency project financing report
- conference agenda
- conference proceedings
- final report (task completion memorandum)

Results and Next Steps

The results of the Romania Industrial Energy Efficiency program were positive and all program objectives and deliverables were met. The following summarizes the key results:

Training and Promotional Program

The training and promotional program was conducted over a twelve month period and consisted of three phases:

Phase I Selection - A selection criteria was developed for potential private sector energy service companies and an invitational campaign conducted through the local media, government energy agencies, utilities, Polytechnic University, and other Romanian technical organizations. Over

fifty companies were evaluated and a final selection of 16 companies was made. The primary criteria for selection centered on:

- Potential for market development and provision of essential services
- Company and staff experience
- Resources and capabilities

The sixteen companies selected are described in the following Table 1:

Phase II Training - A training program was developed and designed to suit the needs of Romanian energy service companies. The program had four main elements:

- Business/Management Training: University of Washington/Small Business Development Center of Bucharest/ABA:
  - Principles of Running a Small Business
  - Accounting/Finance
  - Marketing/Client Relations
  - Negotiating Techniques
  - Staffing/Human Resource Development
  - Management by Objectives
  - Legal Issues/Contracting

- Technical Training - Hagler Bailly Consulting:
  - Thermal Energy Efficiency
  - Project Management
  - Performance Contracting

- Motorola University:
  - Quality System Initiation
  - Organizational Mapping & Analysis
  - Total Productive Maintenance

- Association of Energy Engineers:
  - CEM Review Course

Phase III Certification - The participating energy service companies were administered the AEE Certified Energy Manager examination, all passed and were awarded the certification.

Table 1 - Participant List

1. **Mihail Zdravcu, ARCON SRL.** - Mr. Zdravcu is the manager of this consulting firm which is experienced in electrical engineering, energetics, HVAC, power generators, and boiler automation. Mr. Zdravcu has extensive experience in the refinery industry. He has received the Energy Manager Certification (CEM) of the Association of Energy Engineers. Mr. Zdravcu is President of the Bucharest chapter of the Association of Energy Engineers.

2. **Vasile Grasin and Georgeta Padureanu, ECO-ERG TECHNOLOGIE SERVICE** - Mr. Grasin and Ms. Padureanu are co-managers of ECO-ERG. Prior to founding ECO-ERG, Mr. Grasin and Ms. Padureanu worked for an energy studies institute and performed measurements, testing, energy audits, and thermal balances. Mr. Grasin is an electrical engineer, with extensive experience in refrigeration. Ms. Padureanu's background is in physics and chemical engineering. They have both received the Energy Manager Certification (CEM) of the Association of Energy Engineers. Mr. Grasin is President of the Cluj-Napoca chapter of the Association of Energy Engineers.

3. **Florin Mihailescu, CAMIGO SRL** - Mr. Mihailescu is the manager and partner of his own consulting firm, CAMIGO. His firm specializes in the design and installation of boiler systems and automation. He is a thermal design engineer who formerly worked for the Research and Development Institute. He has received the Energy Manager Certification (CEM) of the Association of Energy Engineers.

4. **Simona Pirvu, AUTOMATIZARI ORION SRL** - Ms. Pirvu is associate manager for AUTOMATIZARI ORION. This company works on design and installation of automation systems for boilers, thermo-power stations, and industrial equipment. Ms. Pirvu has received the Energy Manager Certification (CEM) of the Association of Energy Engineers.

5. **Haralambie Pavel, INVEST PROJECT SRL** - Mr. Pavel is the manager of a consulting firm, INVEST PROJECT, which focuses primarily on consulting and design for the wood industry. Mr. Pavel has 15 years of experience at the National Institute of Research Development. He has received the Energy Manager Certification (CEM) of the Association of Energy Engineers.

6. **Paul Zara, B.I.T.** - Mr. Zara is the manager of a 4-person consulting firm. He was formerly employed by the Energy Research Institute, where he concentrated on energy savings, energy policy and energy balances in industry. He has received the Energy Manager Certification (CEM) of the Association of Energy Engineers.

7. **Constantin Manolescu, EC-ENERG SRL** - Mr. Manolescu is the manager of EC-ENERG SRL, which is a consulting company focusing on small boiler rehabilitation. Mr. Manolescu studied polytechnic energetics.

8. **Marian Manu, PROBELECTRO SRL** - Mr. Manu is the manager of Probelectro, a consulting firm of 4 electrical engineers with particular expertise in the measurements and testing of electrical systems. He has received the Energy Manager Certification (CEM) of the Association of Energy Engineers.

9. **Ion Bota, ENERGOCHIM SRL** - ENERGOCHIM is a consulting firm experienced in designing industrial energy systems, water treatment stations, steam systems, and studies for energy optimization. Mr. Bota's is the firm's manager. He has received the Energy Manager Certification (CEM) of the Association of Energy Engineers.

Table 1 (Cont'd) - Participant List

10. **Adrian Radoi, BEST SRL** - Mr. Radoi was a graduate student at Polytechnical Faculty of Energetics. He is employed by BEST SRL which is comprised of 4 staff members who work primarily on analyses of energy consumption systems. He has received the Energy Manager Certification (CEM) of the Association of Energy Engineers.

11. **Petru Rotilenau, CONSEL Ltd. Engineering SRL.** - Mr. Rotilenau is the manager of CONSEL, which is a company comprised of 60 engineers, technicians and economists who work on engineering design, construction, electrical and thermal systems. Mr. Rotilenau has an MSc in Electrical and Thermal Engineering. One of his employees, Mr. Burtan Mircea has received the Energy Manager Certification (CEM) of the Association of Energy Engineers.

12. **Dorin Moraru, ELECTRON TD SRL** - Mr. Moraru is an electrical engineer and manager of Electron. Electron is involved in electrical testing and measurements projects. Mr. Moraru has received the Energy Manager Certification (CEM) of the Association of Energy Engineers.

13. **Radu Simionescu, PROJECT INT'L SRL** - PROJECT INT'L is a private company that works with district heating piping and small boilers. Mr. Simionescu is the company manager, with a degree in energetics. One of his employees, Mr. George Stoican, has received the Energy Manager Certification (CEM) of the Association of Energy Engineers.

14. **Corneliu Dusan, ROBOMATIC** - Mr. Dusan is the manager of Robomatic, a privately-held, 50-person electrical engineering firm. His company specializes in electrical design. Mr. Dusan has received the Energy Manager Certification of the Association of Energy Engineers.

15. **Mihai Alexandru, G.I.R. S.A.** - Mr. Alexandru is an electrical engineer with years of teaching and research experience at the Bucharest Polytechnical Institute. G.I.R. is a company of 30 full-time employees that specialize in the design of high voltage networks. Mr. Alexandru has received the Energy Manager Certification (CEM) of the Association of Energy Engineers.

16. **Valentin Vasile Cristescu, ECO-VEL SRL** - Mr. Cristescu is the manager of ECO-VEL, a privately-held consulting company specializing in HVAC, energy recovery, air pollution abatement, and publishing management educational books. He has received the Energy Manager Certification (CEM) of the Association of Energy Engineers

Energy Efficiency Program Equipment

The USAID program was designed to assist the participating energy service companies in obtaining initial private sector contracts, and thus provided an energy audit 'kit' of energy measurement and monitoring equipment. This equipment was turned over to the Association of Energy Engineers and made available in an equal access basis. The initial energy audit kit consisted of:

-	Combustion Analyzers	-	Ultrasonic Leak Detectors
-	Thermocouples	-	Dissolved Solids Meter
-	Multimeter	-	Pyrometer
-	Infrared Thermometer	-	Velocity Meter

The energy audit equipment was purchased, tested, and delivered to Romania.

US Vendor Catalog Information System

A CD-ROM based US vendor catalog information system was procured for Romania to aide Romanian energy service companies in locating US manufacturers of industrial and energy efficiency equipment. The equipment consisted of:

- CD-ROM data base
- Two CD-ROM readers
- Laser Printer
- Index manuals

The system was physically located at the Small Business Development Center and interconnected with the Center's computer system. It was set up to be readily accessible to energy service companies in their quest for information.

Demonstration Energy Service Company Projects

Hagler Bailly provided on-site consultants to assist the participating companies in developing actual contracts for energy audits and energy efficiency projects at selected industrial enterprises. This technical assistance consisted of:

- Marketing calls to prospective clients with the energy service company
- Walk-thru energy audits
- Initial advisory audit reports
- Contract review and detailed energy audit review
- Procurement of USAID co-funded energy efficiency equipment
- Shipment and follow-up support for equipment installation

- Development of a monitoring program
- Review of project performance indicators

A total of eight industrial energy efficiency projects were developed in conjunction with five Romanian energy service companies. Each company negotiated a contract with the selected plant for energy audit support, specification and procurement of equipment, commissioning, and start-up. Hagler Bailly assisted the CEM's in the specification of this equipment, procured the equipment in the United States, and shipped it to Romania. The CEMs assisted the plant with clearance through customs, installation, and commissioning. Each plant assumed the liability for installation cost, and customs duties and fees.

Table 2 is a listing of projects and energy efficiency equipment that was procured:

AEE Chapters, Invitational Travel, and Regional Conference

Hagler Bailly solicited the support of the Association of Energy Engineers (AEE) in Atlanta to participate in the USAID program by establishing local chapters in Hungary, Romania, and Romania. The purpose of these Chapters was to establish a lasting linkage with a US energy organization actively engaged in promoting energy efficiency. AEE now has five fully chartered chapters in Eastern Europe:

Hungary:	Budapest
Romania:	Sophia
	Plovdiv
Romania:	Bucharest
	Cluj

These Chapters hold regular meetings, engage in energy efficiency promotional activities, meet with Government policy makers on energy efficiency legislation, disseminate information among members, promote the services of members, and loan the energy audit equipment to members and non-members for energy audits. The Chapters have approximately 85 members total and are actively recruiting new members. Future plans for call for technical training courses, CEM certification programs, and expanded ties with US manufacturers and service firms.

Hagler Bailly also coordinated the attendance of selected CEMs from each country at the annual AEE World Energy Conference in Atlanta for 1992, 1993, 1994, and 1995. Approximately 25 CEMs attended the event over four years.

In 1995, a regional AEE conference was held in Budapest, Hungary. The conference brought together Chapter members from all three countries and presented many interesting topics on energy efficiency. An exhibition was also held in conjunction with the conference which gave US manufacturers and representatives an opportunity to promote their products.

Assessment of Rehabilitation Options for GRIRO (Finance Study)

An assessment was done for GRIRO, a heavy metals manufacturing plant in Bucharest, on rehabilitation options for their thermal power station. The assessment looked at five technical rehabilitation options and associated financing schemes, and presented a technical and financial analysis for each option. A final report was issued which presented the options, associated cost/benefit analysis, and recommendations. The GRIRO staff accepted the recommendations and attempted to secure financing for the recommended option. Unfortunately, the offshore procurement costs were too high and the Plant has since pursued a less costly alternative which has a small offshore procurement element. However, the report aided the plant significantly in choosing a rehabilitation option that met their technical and financial requirements.

The next step for industrial energy efficiency in Romania would be to build upon the private sector approach set out in this program and further support the development of a market for energy services in Romania. USAID can support this by:

- Continued support of AEE chapter activities and CEMs
- Expansion of energy manager training and certification programs
- Demonstration energy efficiency measures at selected sites
- Promotion of DSM/IRP programs in the country
- Promotion of power sector restructuring and tariff reform
- Process engineering efficiency studies at selected industries

Table 2 - Romanian Energy Efficiency Projects

Plant Name/Location	CEM	Project Description	Equipment
Stirom Glass Factory Bucharest	Mihail Zdravcu, ARCON SRL.	Production Improvement Steam System Improvement Motor Efficiency	Infrared Pyrometers Ultrasonic Leak Detector Cog Belts
Muha Construction Company Suceava	Haralambie Pavel, INVEST PROJECT SRL	Drying Room Automation Combustion Efficiency Improvement	Moisture Meters Combustion Analyzer
Mobins Furniture Plant Bucharest	Florin Mihailescu, CAMIGO SRL	Drying Room Automation	Moisture Meters
VEGA Petroleum Refinery Ploesti	Simona Pirvu, AUTOMATIZARI ORION SRL	Combustion Efficiency Improvement	Combustion Analyzer and Control System
Terapia Pharmaceutical Complex Cluj-Napoca	Vasile Grasin and Georgeta Padureanu, ECO-ERG TECHNOLOGIE SERVICE	Boiler House Metering and Efficiency Improvement Steam Trap Replacement	Metering Steam Traps
Borsa City Hospital Borsa	Vasile Grasin and Georgeta Padureanu, ECO-ERG TECHNOLOGIE SERVICE	Combustion Efficiency Improvement Boiler House Metering and Efficiency Improvement Steam Trap Replacement	Combustion Analyzer Metering (Flow Totalizer) Steam Traps
Matizol Insulation Materials Plant Ploesti	Mihail Zdravcu, ARCON SRL.		
Danubiana Tire Factory Bucharest	Florin Mihailescu, CAMIGO SRL	Combustion Efficiency Improvement	Combustion Analyzer

ENERGY EFFICIENCY MARKET DEVELOPMENT IN ROMANIA
Sponsored by the US Agency for International Development and the Association of Energy Engineers

PROGRAM REVIEW MEETING - ROMANIA
November 18, 1996

Location: Bucharest Hotel

Attendees: Certified Energy Managers; Plants participating in USAID industrial energy efficiency projects; Representatives of the Ministry of Industry; USAID and its contractors.

Objective: To discuss and review energy efficiency activities, results, and future directions of: (1) support to the development of local energy service companies; (2) establishment of Romanian Chapters of the Association of Energy Engineers; and, (3) energy efficiency project demonstrations.

0830-0900	Registration	
0900-0915	Introduction and Welcoming remarks	Mihail Zdravcu and Georgetta Padureanu, AEE Romania
0915-0930	AID Romania - Country Program Description	Roberto Figueredo, USAID, Romania
Review of Project Results		
1.	**Demonstration Projects at Industrial Plants**	**Moderator:** Hagler Bailly
0930-1045	Roundtable with managers from plants participating in demonstration projects **Topics:** Concrete results achieved by the plants with the help of the USAID Program Results and lessons learned Benefits of hiring ESCOs	
1045-1100	**Coffee Break**	
1100-1200	**Summarize Results of the Roundtable Discussion**	**Moderator:** Hagler Bailly
12:00-1300	**Luncheon with Keynote Speaker** AEE Organization and Future Trends	Al Thumann, AEE
2.	**Support to Energy Service Companies (ESCOs)**	**Moderator:** Hagler Bailly
1300-1315	Introduction (Results of the ESCO Survey, Highlight of some Results and Trends)	Laurent Pommier
1315-1345	What it Takes to Succeed as General Manager of an ESCO	Peter Garforth
1345-1400	USAID ESCO Training Program	Dr. Aureliu. Leca - Invited
1400-1415	Open Discussion	
3.	**Establishment of AEE Chapters**	**Moderator:** Al Thumann, AEE
1415-1445	AEE Chapters Status Report	Mihail Zdravcu, AEE Bucharest Georgetta Padureanu, AEE Cluj
1445-1500	Open Discussion	
1500-1515	**Coffee Break**	
4.	**Financing Energy Efficiency - Future Directions**	**Moderator:** Hagler Bailly
1515-1530	Global and regional trends in energy efficiency financing	Laurent Pommier
1530-1545	EBRD Financing Mechanisms	Dr. Virgil Musatescu, EBRD
1545-1615	Group Discussion	*Invited: Dr. Ionut Purica, EBRD* *Emilian Radu, Romanian Commercial Bank* *Rasvan Radu, Romanian Commercial Bank*

15

ENERGY EFFICIENCY MARKET DEVELOPMENT IN ROMANIA
Sponsored by the US Agency for International Development
and the Association of Energy Engineers

PROGRAM REVIEW MEETING - ROMANIA
November 18, 1996

Location: Bucharest Hotel

Attendees: Certified Energy Managers; Plants participating in USAID industrial energy efficiency projects; Representatives of the Ministry of Industry; USAID and its contractors.

Objective: To discuss and review energy efficiency activities, results, and future directions of: (1) support to the development of local energy service companies; (2) establishment of Romanian Chapters of the Association of Energy Engineers; and, (3) energy efficiency project demonstrations.

5.	**Discussion of Energy Efficiency Issues and Future Cooperation**	**Moderator:** Robert Archer, USAID WDC
1615-1630	Strategies for overcoming obstacles to Energy efficiency projects	Elektrotek (Scott Vicary)
1630-1700	Group Discussion	
2000	Dinner	Sponsored by Hagler Bailly

ENERGY EFFICIENCY MARKET DEVELOPMENT IN ROMANIA
Sponsored by the US Agency for International Development
AND THE ASSOCIATION OF ENERGY ENGINEERS

OPEN CONFERENCE - ROMANIA
November 19, 1996

Location: Bucharest Hotel

Attendees: Representatives from industrial and institutional enterprises nominated by the AEE members; Plants and vendors who participated in USAID Industrial Energy Efficiency Project and Emergency Energy Project; AEE members; Certified Energy Managers; Representatives from Government Ministries and agencies, utilities, and other assistance programs; USAID and its contractors.

Objective: To promote a market-oriented approach to energy efficiency.

0800-0830	Registration	
0830-0840	Welcoming Remarks	Mr. Rotaru, ARCE
0840-0850	Role of USAID in Romania	Roberto Figueredo, USAID
0850-0900	AEE in Romania	Mihail Zdravcu and Georgetta Padureanu

Results of Demonstration Projects — **Moderator:** Hagler Bailly

ESCO presentation with Plant Energy Manager

	CEM	Plant
0900-0930	Mihail Zdravcu	Stirom, Matizol
0930-1000	Vasile Grasin and Georgetta Padureanu	Terpia, Borsa
1000-1015	Haralambie Pavel	Muha
1015-1030	**Coffee Break**	
1030-1045	Simona Parvu	Vega
1045-1115	Florin Mihailescu	Danubiana, Mobins
1115-1200	Open Discussion	
1200-1330	**Luncheon with Keynote Speaker** Developments in the Global Energy Efficiency Market Concurrent Press Conference	Al Thumann, AEE

AEE Chapters — **Moderator:** Al Thumann, AEE

1330-1345	Presentation of AEE	Al Thumann, AEE
1345-1400	AEE Chapters in Romania	Mihail Zdravcu, AEE Bucharest Georgetta Padureanu, AEE Cluj
1400-1415	Open Discussion	

Financing Energy Efficiency Projects in Romania — **Moderator:** Hagler Bailly

1415-1430	Global and regional trends in energy efficiency financing	Laurent Pommier
1445-1515	European financing mechanisms	Dr. Virgil Musatescu, EBRD *Invited: Dr. Ionut Purica, EBRD* *Emilian Radu, Romanian Commercial Bank* *Rasvan Radu, Romanian Commercial Bank*

ENERGY EFFICIENCY MARKET DEVELOPMENT IN ROMANIA
Sponsored by the US Agency for International Development
AND THE ASSOCIATION OF ENERGY ENGINEERS

OPEN CONFERENCE - ROMANIA
November 19, 1996

Location: Bucharest Hotel

Attendees: Representatives from industrial and institutional enterprises nominated by the AEE members; Plants and vendors who participated in USAID Industrial Energy Efficiency Project and Emergency Energy Project; AEE members; Certified Energy Managers; Representatives from Government Ministries and agencies, utilities, and other assistance programs; USAID and its contractors.

Objective: To promote a market-oriented approach to energy efficiency.

1515-1530	**Coffee Break**	
1530 -1620	**Concluding Remarks**	Robert Archer, USAID WDC Roberto Figueredo, USAID Mihail Zdravcu, AEE Bucharest Georgetta Padureanu, AEE Cluj
1620 - 1830	**Conference and Exhibition Networking Meeting**	

AN ASSESSMENT OF ALTERNATIVE REHABILITATION OPTIONS FOR THE GRIRO THERMAL POWER STATION IN BUCHAREST, ROMANIA

FINAL REPORT

U.S. AGENCY FOR INTERNATIONAL DEVELOPMENT

Eastern Europe Regional Energy Efficiency Project

Contract No. EUR-0030-C-00-2053-00, Task 1

Prepared By:

K & M Engineering and Consulting Corporation
2001 L Street, N.W., Suite 500
Washington, DC 20036

Under Subcontract to:

RCG/Hagler, Bailly, Inc.
1530 Wilson Boulevard, Suite 900
Arlington, VA 22209-2406

February 10, 1994

19

AN ASSESSMENT OF ALTERNATIVE REHABILITATION OPTIONS FOR THE GRIRO THERMAL POWER STATION IN BUCHAREST, ROMANIA

TABLE OF CONTENTS

			Page
Executive Summary			vii
I.	K&M Subcontract Task Description		1
	1.0	The GRIRO Project - Rehabilitation of Thermal Power Station	1
	2.0	Scope of Work	2
	3.0	Deliverables	3
II.	Introduction		3
	1.0	Background	3
		1.1 Electrical and Thermal Production Capacity	5
	2.0	Objective of Study	6
III.	Need for the Project		6
	1.0	Existing Facilities	6
	2.0	Existing Capability	7
	3.0	Forecasted Thermal and Power Demand	10
IV.	Technical Feasibility		11
	1.0	Availability and Quality of Fuels	11
	2.0	Options to be Considered	14
	3.0	Analysis and Discussion of Options	16
		3.1 Base Case Modernization - Option I	16
		3.1.1 Option IA	16
		3.1.2 Option IB	16
		3.2 Thermal and Electric Expansion - Option II	17

TABLE OF CONTENTS (Continued)

				Page
		3.3	Thermal and Electric Expansion Utilizing Gas/Oil Fired Combined Cycle Cogeneration Plant - Option III	17
			3.3.1 Option IIIA	17
			3.3.2 Option IIIB	19
	4.0	Recommended Option		20
		4.1	Discussion and Recommendation	20
		4.2	Plant Description and Features	21
			4.2.1 Configuration	21
			4.2.2 Mechanical Systems	22
			4.2.2.1 Combustion Turbine Generator (CTG)	22
			4.2.2.2 Steam Turbine	23
			4.2.2.3 Heat Recovery Steam Generator	23
	5.0	Major Equipment Preliminary Specifications		24
		5.1	Combustion Turbine Generator	24
			5.1.1 General	24
			5.1.2 Electrical Power Requirements	25
			5.1.3 Sound Levels	26
			5.1.4 Safety	26
			5.1.5 Combustion Turbine Generator	26
			5.1.6 Overall Responsibility	27
		5.2	Heat Recovery Steam Generator	28
			5.2.1 General	28
		5.3	Steam Turbine Generator	30
		5.4	Existing Equipment Rehabilitation	31
V.	Environmental Impact Assessment			33
	1.0	General		33
	2.0	Air Quality		34
	3.0	Water/Wastewater Discharge Quality		34
	4.0	Noise and Other Social Impacts		34

TABLE OF CONTENTS (Continued)

				Page
VI.	Project Cost and Schedule			34
	1.0	Scope Definition		34
	2.0	Estimate Basis		34
		2.1	Quantities	34
		2.2	Equipment and Material Prices	35
		2.3	Installation Labor	35
		2.4	Other Cost Items	35
		2.5	Future Escalation	36
		2.6	Custom Duty	36
		2.7	Owner Costs	36
		2.8	Foreign/Local Currency Split	36
		2.9	Exclusions	36
	3.0	Summary of Project Costs		38
	4.0	Project Milestone Schedule		38
		4.1	Introduction	38
		4.2	Plant Schedules	41
VII.	Economic Analysis			45
	1.0	Benefit Cost Analysis of Considered Options		45
	2.0	Economic Evaluation and Recommendation		47
VIII.	Alternative Financing Options			49
	1.0	Overview of Relevant Project Development Alternatives		49
		1.1	The Government Sponsored Project Approach	49
		1.2	The Privatized Built-Own-Operate Approach	50
	2.0	Overall Financing Requirements		53
	3.0	Preliminary Financing Schemes		53
		3.1	Full Sovereign Debt Scenario	53
			3.1.1 Potential Sources of Debt	55
			3.1.2 Potential Sources of Equity	56
		3.2	Limited Recourse Financing Scenario	56
			3.2.1 Potential Sources of Debt	57
			3.2.2 Potential Sources of Equity	59

TABLE OF CONTENTS (Continued)

		Page
IX.	Recommended Next Steps	60
	1.0 Suggested Actions for GRIRO	60
	2.0 Proposed Next Steps for USAID	61
X.	Appendices	62
Table I	Existing Equipment List	65
Table II	District Heating Temperature	68
Figure I	Typical Week - Winter Energy Production	77
Figure II	Typical Week - Summer Energy Production	78
Figure III	Existing Mechanical Equipment Functional Diagram	79
Figure IV	Electrical System Schematic	80
Figure V	Yearly Thermal and Electrical Energy Production	81
Figure VI	Gas and Oil Yearly Consumption	82
Figure VII	Bucharest Gas Distribution Grid	83
Figure VIII	Heat Balance Diagram, Recommended Option IIIA	84
	• Case IIIA Winter Load (-8°C) Full Firing	85
	• Case IIIA Summer Load (+21°C) Full Firing	87
	• Case IIIA Summer Load (+21°C) Full Firing Steam Injection	89
	• Case IIIA Winter Load (-8°C) Maximum Electrical/Output	91
Table VI-2	Capital Cost Estimate	
	• Option IA - Romanian Supply	93
	• Option IA - International Supply	94
	• Option IB - Romanian Supply	95
	• Option IB - International Supply	96
	• Option II - Romanian Supply	97
	• Option II - International Supply	98
	• Option IIIA - Romanian Supply	99
	• Option IIIA - International Supply	101
	• Option IIIB - Romanian Supply	103
	• Option IIIB - International Supply	104
Table VII-2	Benefit - Cost Analysis	
	• Option IA - Romanian Supply	106
	• Option IA - International Supply	107
	• Option IB - Romanian Supply	108

TABLE OF CONTENTS (Continued)

		Page
	• Option IB - International Supply	109
	• Option IIA - Romanian Supply	110
	• Option IIA - International Supply	111
	• Option IIIA - Romanian Supply	112
	• Option IIIA - International Supply	113
	• Option IIIB - Romanian Supply	114
	• Option IIIB - International Supply	115
Table VII-3	Annual Power, Heat Production and Fuel Consumption Assumptions	116
Table VII-4	Parameters Used on the Economic Analysis	117
Table VII-5	Additional Benefits and Costs	119
Table VII-7	Rate of Return Estimate	
	• Option IA - Romanian Supply	120
	• Option IA - International Supply	121
	• Option IB - Romanian Supply	122
	• Option IB - International Supply	123
	• Option II - Romanian Supply	124
	• Option II - International Supply	125
	• Option IIIA - Romanian Supply	126
	• Option IIIA - International Supply	127
	• Option IIIB - Romanian Supply	128
	• Option IIIB - International Supply	129

SKETCHES - Functional Diagram

- Option IA
- Option IB
- Option II
- Option IIIA
- Option IIIB
- General Arrangement Option IIIA

TABLE OF CONTENTS (Continued)

		Page
XI.	List of United States Manufacturers	130
	1.0 Combustion Turbines	
	2.0 Heat Recovery Steam Generators	
	3.0 Steam Turbines	
	4.0 Condensers	
	5.0 Pumps	
	6.0 Heat Exchangers	
XII.	Environmental Impact of the New Facility Atmospheric Releases	
	1.0 General	132
	2.0 European Community Directives	132
	3.0 Atmospheric Releases of the New Facility	135
XIII.	Translation of Romanian Foreign Investment Law	137
XIV.	Final Comments and Conclusions	
	1.0 Sequence of Events	141
	2.0 GRIRO's Review of Draft Report	141
	3.0 Option Selected by GRIRO	141
	4.0 Future Actions to Implement GRIRO's Selected Option	141
	5.0 Possible Sources of Financing	142

EXECUTIVE SUMMARY

This Final Report contains the findings and recommendations from K&M Engineering and Consulting Corporation's assessment of alternative rehabilitation options, including development of alternative financing options for the GRIRO thermal power station in Bucharest, Romania. This work was performed under subcontract to RCG/Hagler-Bailly, Inc., and funded by the U.S. Agency for International Development, Bureau for Europe Energy and Infrastructure Division, as a part of a broader technical assistance program designed to improve overall energy efficiency in the industrial sectors of selected Eastern European countries, especially through enhanced participation by the private sector. In particular, this task assignment was intended to provide preliminary planning, conceptual engineering design, and project development assistance to GRIRO S.A. in an attempt to facilitate the development and early deployment of an energy efficiency improvement demonstration project at its plant site in northwest Bucharest. The GRIRO rehabilitation project is a promising project from the standpoint of need, replicability, and potential for private sector participation.

With respect to relevant background on the company, GRIRO S.A. is a major industrial corporation which specializes in the fabrication of heavy steel products including storage tanks, pressure vessels and heat exchangers. At present, approximately over 50 percent of GRIRO's current production is for export, primarily to Japan, Italy, France, Switzerland, Turkey, Bangladesh and neighboring Eastern European countries. Such a high volume of exports implicit in this percentage is, in all probability, sustainable for the near future given the fact that Romania's production costs are only twenty (20) percent of those in Western Europe for comparable products. In this regard, the firm presently carries a one to two year backlog of orders, and earns the majority of its income in hard currency, of which the Government of Romania permits it to retain a portion. In addition, the company participated in the original USAID-sponsored emergency energy assistance program, and has since implemented most of the near-term recommendations of that program, including the appointment of an energy manager trained under the same USAID project. Moreover, GRIRO S.A. is the only firm in Romania licensed under U.S. ASME code for the manufacture and repair of ASME-coded pressure vessels, and indeed the only firm in Eastern Europe empowered to use ASME U and U2 manufacturing stamps. Finally, GRIRO S.A. has prospered and grown over the past few years, despite the fact that the economy of Romania in general has continued to experience a sharp decline in overall production, income and employment over this same period of time.

PROJECT OPPORTUNITY AND NEED FOR THE STUDY

The existing power plant located at the GRIRO facility not only furnishes electricity and process steam for use in the various GRIRO S.A. shops on site, but is also responsible for providing district heating water to approximately 10,000 apartments, as well as small amounts of process steam to a hospital and nearby industries. In addition, during periods of low demand in the various steel fabrications shops, surplus electricity production is sold to RENEL, the state-owned electric utility.

However, more recently, due to the poor reliability and deteriorating condition of its generating equipment, GRIRO increasingly has been forced to purchase more and more electricity from the grid, primarily during periods of peak demand. Moreover, GRIRO has recently been unable to meet its district heating load requirements, especially during the critical winter months.

The original steam production and power generation equipment for the existing facility was installed beginning in 1929, and consisted of six (6) Babcock & Wilcox boilers with a capacity of 13 metric tons of steam per hour (Mt/h) each, as well as a 1.6 MWe Brown Bovari steam turbine. In 1965, a 50 Mt/h Romanian boiler and 6 MWe Russian steam turbine were added to the facility to meet growing load requirements at the various shops on-site. Of the six original boilers, only two remain in operation today. Both are capable of being fired by either natural gas or fuel oil. The 50 Mt/h boiler was designed to burn natural gas only, but is presently being refitted to permit firing by fuel oil as well, especially during the winter months when natural gas availability and distribution system pressures are both extremely low. Finally, due in large part to the very poor condition of the existing district heating equipment, particularly the heat exchangers, the GRIRO S.A. facility can no longer fulfill its contractual obligation of supplying hot water to 10,000 apartments in RADAT's district heating Zone 6.

GRIRO S.A. finds itself at a critical juncture. It can no longer put off a decision regarding modernization of its existing process steam generation, electric generation, and district heating facilities because it has become an urgent necessity. At the same time, demand is growing in both district heating Zones 1 and 6 adjacent to the GRIRO site, and the price that RADAT pays potential cogeneration producers has begun to approach levels that may justify additional investments by GRIRO in adding such capacity. Moreover, the price that RENEL is willing to pay independent power producers in Romania is also beginning to approach a level where surplus electricity sales may be able to generate substantial additional profits for GRIRO, should GRIRO choose to intentionally oversize its replacement steam generator and power production equipment so as to be able to sell surplus electricity from a modernized facility under the terms and conditions of a long-term power purchase agreement. Accordingly, in an effort to assist GRIRO, S.A. in better understanding the rehabilitation alternatives available at this critical juncture, USAID offered to sponsor this preliminary feasibility study effort, including development of alternative financing options.

PLANT REHABILITATION ALTERNATIVES EVALUATED

In concert with GRIRO and RCG/Hagler-Bailly staff, K&M developed several alternative scenarios and options for evaluation during this study effort. These rehabilitation alternatives are briefly described below:

27

I. Base Case Modernization Program

Option IA - This option considers the addition of a 50 Mt/h dual firing boiler (gas or oil), and keeping the existing 50 Mt/h boiler in operation. There will be no increase in electrical output, and the actual district heating load will be met with no allowance for future growth. This is the lowest capital cost option, and all of the required components can be manufactured in Romania.

Option IB - The output from this option is similar to Option IA, the only advantage being more flexibility of operation with the addition of two (2) 25 Mt/h boilers. The capital cost is higher than in the previous option, and all of the required components can be manufactured in Romania.

II. Modest Expansion in Thermal and Electrical Capacity

Option II - This option considers the installation of two (2) new 55 Mt/h boilers while keeping the existing 50 Mt/h boiler in operation, and the addition of a new 16 MWe steam turbine, permitting the sale of 10 MWe of electricity during the winter as well as 16 MWe during the summer to RENEL. In addition, the forecasted future district heating demand will be met. The capital cost for this option is higher than in the two previous options. All of the components to implement this option can be manufactured in Romania.

III. Creation of a Major Cogeneration Facility and New Profit Center

Option IIIA - This option considers the installation of an energy efficient combined cycle facility consisting of a combustion turbine and a heat recovery steam generator with additional duct firing, along with a new steam turbine generator. A key assumption with respect to this option is that sufficient quantities of light automotive diesel oil will be made available to the project under discount purchase direct from the refinery as discussed with the Ministry of Industry and Material Resources. This option will permit the sale of 44 MWe of electricity during the winter and 72 MWe during the summer to RENEL, and allow for continued expansion of district heating services in RADAT district heating Zones 1 and 6. The operating flexibility of the combined cycle cogeneration facility will permit an optimum balance between electricity production and district heating demand at different load conditions. In addition, the existing 50 Mt/h boiler and one of the operable 13 Mt/h boilers will remain in operation as a back-up to the combustion turbine. The combustion turbine will have to be imported, but the balance of equipment, including the steam turbine generator, can be manufactured in Romania. The capital cost for this option is the second highest of all options considered.

Option IIIB - This option considers the installation of two (2) combustion turbines and heat recovery steam generators with additional duct firing along with a new steam turbine generator. This option would also utilize light automotive diesel fuel rather than natural gas as its primary fuel source. The output of this option is very similar to the previous case, but with additional operational flexibility, redundancy and reliability resulting from having two combustion turbines instead of one. As in the previous option, in the event of failure of a single combustion turbine, the existing 50 Mt/h and 13 Mt/h boilers will be kept available as backups. The combustion turbines will have to be imported, but the balance of equipment can be manufactured in Romania. The capital cost for this option is the highest of all options considered.

OVERALL STUDY APPROACH

In undertaking this assessment, K&M first evaluated each of these alternative rehabilitation options from the perspective of overall technical feasibility, including optimum use of existing facilities, ease of installation given current plot area constraints, availability of suitable fuels and sufficient water, compliance with existing environmental standards, enhanced equipment reliability, increased efficiency of operational units, ability to combust more than one fuel, good operating flexibility at both minimum and maximum anticipated loadings, and ability to meet winter and summer forecasted demand for hot water as well as generate surplus electricity for sale to RENEL.

Next, K&M undertook a detailed analysis of anticipated project costs for each option preparatory to performing a comparative economic analysis of all options considered. In conducting this comparative economic evaluation, K&M utilized two separate ranking criteria: (1) the ratio of the present value of the anticipated stream of benefits from the project to the present value of the estimated costs; and (2) the internal rate of return calculated in accordance with standardized procedures developed by the World Bank.

Finally, K&M developed two alternative financing scenarios for the preferred option; the first plan was based on sovereign debt financing backed by the full faith and credit of the Government of Romania, and the second based upon limited recourse project financing on a privatized basis.

HIGHLIGHTS OF FINDINGS AND RECOMMENDATIONS

An overview of technical parameters, including major differences in equipment, steam production capability, product output for use in meeting district heating obligations, and seasonal electrical output for each of the five options evaluated, is presented in Exhibit ES-1.

EXHIBIT ES-1

OVERVIEW OF TECHNICAL PARAMETERS OF CONSIDERED OPTIONS

Option	Equipment	Steam Production*	District Heating Product	Electrical Output MWe Winter/Summer
IA	2 - 50 Mt/h boilers	100 Mt/h	77 Gcal/h	7.6
IB	2 - 25 Mt/h 1 - 50 Mt/h	100 Mt/h	77 Gcal/h	7.6
II	1 - 50 Mt/h 2 - 55 Mt/h boilers	160 Mt/h	77Gcal/h	15.9/21.3
IIIA	1 Combustion Turbine 1 - 50 Mt/h 1 - 13 Mt/h boilers	163 Mt/h	77Gcal/h	49.0/77.7
IIIB	2 Combustion Turbines 1 - 50 Mt/h 1 - 13 Mt/h boilers	163 Mt/h	77 Gcal/h	49.7/65.1

*Winter -8°C ambient temperature

Note: Assumes fixed output to meet demand, higher output available for Options II, IIIA and IIIB if required.

A summary of the results from a comparative economic analysis performed by K&M, from the standpoint of both net present value of the benefit/cost ratio and internal rate of return for each of the five options considered, is presented below in Exhibit ES-2.

EXHIBIT ES-2

SUMMARY OF RESULTS FROM COMPARATIVE ECONOMIC ANALYSIS OF CONSIDERED OPTIONS

	Capital Cost in Thousands of 1993 U.S. Dollars		Internal Rate of Return		Net Present Value Benefits/Costs	
Option	Romanian Supply	International Supply	Romanian Supply	International Supply	Romanian Supply	International Supply
IA	2,110	4,640	1.120	0.570	2.796	2.362
IB	2,350	4,680	0.954	0.565	2.736	2.347
II	5,540	12,680	0.530	0.243	1.550	1.326
IIIA	37,800	41,900	0.252	0.229	1.474	1.426
IIIB	42,360	46,460	0.171	0.156	1.246	1.204

As illustrated above, Options IA and IB require the smallest capital investment and might make sense if only limited internal financing were available; however, in the final analysis, these options are only temporary solutions and are incapable of meeting future growth in the demand for residential heating. In addition, from the standpoint of electricity generation, this is not a particularly attractive scenario. Either option will require overhaul of the smaller 1.6 MW turbine generator first installed in 1935. Even after such an overhaul, sustainable and reliable operation of this unit cannot be guaranteed. Moreover, despite the fact that these options possess the highest net present value benefit/cost ratios and internal rates of return of all options considered, neither option represents a growth strategy for the future nor permits GRIRO to be in a position to generate additional profits from surplus steam, hot water and electricity sales under long-term purchase arrangements with both RADAT and RENEL.

Option II offers more advantages to GRIRO than either of the previous options in that it will permit the generation of a small amount of surplus electricity to be sold to RENEL for what essentially amounts to an energy charge, as well as meet present and future district heating demand requirements. However, this option is not capable of contributing significant amounts of electricity for sale to RENEL under the terms and conditions of a long-term power purchase agreement, and as such, GRIRO is foregoing profits that it might otherwise have captured. Similarly, greater electricity production at the GRIRO site is also desirable from RENEL's perspective since it obviates the need for providing new production capacity in the northwestern part of Bucharest to meet rising industrial demand, increases overall system reliability, and contributes toward stabilization of the grid.

Option IIIA offers the combined advantages of being the most efficient, flexible, and environmentally sound option. It can also provide additional thermal energy to meet future growth in demand for hot water in RADAT district heating Zones 1 and 6, and possesses alternative steam generation capacity through retention of two of the existing boilers as designated backups. In addition, this option can supply a larger amount of electricity on a sustainable year-round basis than any other considered option, thereby permitting RENEL access to approximately 44 MWe in the winter, and 72 MWe during the summer when a reliable source of additional electricity generation is most needed in Romania. Moreover, it has a reasonable internal rate of return (25.2 percent for the case which attempts to maximize local content), and a respectable benefit/cost ratio (1.474 for the same case). Finally, the operational flexibility of this proposed combined cycle facility will permit an optimum balance of electrical and thermal loading throughout the year to meet rapidly changing seasonal demands and requirements.

Option IIIB has the highest capital cost of all options considered, but with a lower year-round electrical output than Option IIIA. Moreover, its internal rate of return and net present value benefit/cost ratios are considerably lower than those of Option IIIA for similar cases. The only advantage of Option IIIB over IIIA is the additional flexibility and reliability made possible by the use of two combustion turbines instead of one. However, taking into consideration the fact that recent experience has shown that the average availability for advanced aeroderivative combustion turbines with steam injection is over 95 percent, the added flexibility implicit in this

option is hardly worth the increased cost.

Based upon the technical and economic analyses conducted for this prefeasibility study as well as the discussion highlights presented above, K&M recommends that GRIRO seriously consider implementation of Option IIIA as it reviews its expansion and business plan options for the next twenty to thirty years. This is a forward looking strategy tailored toward creating a new business line/profit center for GRIRO. The closest analogy that K&M can draw is that when profits declined dramatically in the Hawaiian sugar industry about ten years ago, producers began to expand their bagassee-fired cogeneration capacity, selling surplus electricity to the Hawaiian grid under long-term power purchase agreements that covered both fixed and variable costs, as well as debt servicing and a guaranteed profit or return on equity. Today, fully forty (40) percent of the Hawaiian sugar industry's profits are derived from such power purchase arrangements, Moreover, such contributions to profits are of a non-cyclicable nature, emanate from a predictable stream of payments, and can be utilized to secure project financing.

ALTERNATIVE FINANCING APPROACHES

In today's uncertain and generally difficult investment climate in Eastern Europe, the great paradox is that oftentimes the larger the project, the easier it is to arrange financing. In the case of the GRIRO rehabilitation project, total project costs (as opposed to total financial requirements) for the various rehabilitation options evaluated in this preliminary feasibility study range from US$2.11 million for Option IA to US$42.36 million for Option IIIB under a scenario that attempts to maximize local Romanian supply. While Option IA may possess the highest benefit/cost ratio as well as internal rate of return of all options evaluated, it will be next to impossible to arrange external financing from an international financial institution because the loan amount is simply too small to consider. For instance, the European Bank for Reconstruction and Development (EBRD) is really only looking for larger projects in the US$30-40 million range. Accordingly, if GRIRO decides to select either Option IA, IB, or II, it will in all probability have to arrange its own project financing through a commercial bank already familiar with doing business in Romania. At the present time, such financing is extremely difficult to arrange for Romania.

On the other hand, assuming that GRIRO agrees with K&M's recommendation that Option IIIA presents the greatest opportunity for generating additional profits while at the same time improving overall energy efficiency, operational flexibility, and environmental compliance, a number of interesting financing options are possible. Two such preliminary financing schemes are explored in the study; one based on a government-sponsored project approach, and the other based on a privatized build-own-operate approach. In both instances, a 70/30 debt to equity ratio was employed. In the case of a loan backed by a sovereign debt guarantee signed by the Government of Romania, the banks will require at least 30 percent equity for any project in Romania today. With respect to project financing arranged on a limited recourse basis (such as the case of a privatized cogeneration facility on a BOO basis selling both thermal energy and electricity over the fence under long-term purchase agreements), a 70/30 ratio represents an appropriate level of gearing given a preliminary assessment of the project's risks, coupled with

the potentially constant level of revenues anticipated over the project's life.

In K&M's view, any project financing scheme for this project based upon utilizing the full faith and credit of the Government of Romania to guarantee repayment of the loan will be extremely difficult to arrange at the present time. Accordingly, of the two project development/financing scheme approaches reviewed in the study, K&M recommends that GRIRO consider proceeding with a privatized cogeneration facility whose project financing is secured by a combination of owner's equity (on the part of the project sponsors) and the value implicit in long-term power purchase and thermal energy sales agreements with RENEL and RADAT, respectively. In this case, by arranging to put up 30 percent of the total financing requirements for this project, the project sponsors will have the right to build, own, and operate this cogeneration facility for a specified duration of time (generally 15-20 years). The balance of project financing will be secured on a limited recourse basis and backed by the value of the long-term power purchase and thermal energy sales agreements, as well as possible secondary guarantees from government, bilateral, and/or multilateral organizations.

Potential sources of debt that can be anticipated for a privatized energy project on a BOO basis (i.e. - a privatized company as a separate profit center) selling electricity to GRIRO S.A. and RENEL under a long-term power purchase contract and thermal energy to GRIRO S.A., RADAT, and other interested commercial customers under long-term thermal energy sales agreements include the following: multilateral agencies such as the European Bank for Reconstruction and Development (EBRD) and possibly the International Finance Corporation (IFC); the Overseas Private Investment Corporation (Finance Program); commercial banks through co-financing with multilateral institutions; and debt/debt swaps and local banks to meet local currency requirements.

Similarly, potential sources of equity and in-kind contributions that can be anticipated for such a project structure include: the project sponsors; the EBRD's Merchant Banking Group; other multilateral equity participation (possibly by the IFC); RENEL; RADAT; and local institutional, corporate, and individual investors.

RECOMMENDED NEXT STEPS

It is suggested that GRIRO initiate discussions with both RENEL and RADAT regarding their potential interest in such a project from the standpoint of becoming future customers, as well as to explore whether they are interested in becoming one of the project sponsors. In this regard, K&M recommends that GRIRO, RENEL, and RADAT consider signing a Memorandum of Understanding (MOU) setting forth their intentions to encourage the development of this proposed cogeneration facility on a privatized basis. For its part, GRIRO should be prepared to provide a suitable site located on the grounds of its steel fabrication plant in northwest Bucharest. Further, GRIRO should be willing to state its intent to promote the establishment of a separate project company on a privatized basis to build, own, generate and sell electricity to RENEL and thermal energy to RADAT and possibly other commercial customers. Similarly, RENEL and RADAT should be prepared to state their intent to purchase specific quantities of electricity and thermal energy under long-term agreements.

33

With respect to suggested next steps for GRIRO S.A., it should be prepared to encourage and support the following additional activities:

- The initiation of a risk assessment and institutional framework analysis to be prepared by outside technical consultants.

- The commissioning of a fuels availability study with special emphasis on alternatives for improving line pressure in the existing natural gas distribution system, and potential procurement sourcing for distillate fuels suitable for use in combustion turbines.

- The preparation of a detailed feasibility analysis for Option IIIA, including soils analysis, detailed equipment specifications, engineering drawings, and tariff requirements.

- The establishment of a joint-venture project company with interested project sponsors, possibly with the assistance of a U.S. private power developer.

Finally, regarding recommended next steps for USAID, as a direct follow-on to the prefeasibility analysis performed under the current contract, it is proposed that USAID consider providing technical assistance support involving undertaking the following actions:

- Support the continued development of this promising private energy project opportunity by providing additional technical assistance to GRIRO to conduct a risk assessment and institutional framework analysis, as well as a fuels availability assessment for this project.

- Provide additional institutional framework/privatization assistance in such areas as private power seminars/workshops, opportunities for GRIRO and RENEL senior management to review firsthand with successful U.S. private power developers the overall framework and strategy for implementing similar private power or cogeneration projects in the United States and elsewhere, and drafting assistance for model Power Purchase and Thermal Energy Sales Agreements.

GRIRO RESPONSE

This assessment and recommendations were submitted to GRIRO for review in September, 1993. K&M and GRIRO personnel met in Bucharest in December, 1993, to discuss the K&M recommendations, but while GRIRO personnel agree with the K&M combined-cycle configuration recommendation, implementation of that option will be delayed indefinitely due to the following reasons:

- The availability of fuel for the combustion turbine has decreased since the report

was initially released; and

- After discussions with the Romanian government, GRIRO cannot finance the proposed combined cycle power plant at this time.

Considering the options proposed by K&M and technical and financial constraints, GRIRO has selected a variation of option IB for implementation; three 25 Mt/h gas and oil fired boilers are to be installed and the existing 50 Mt/h boiler will remain in service. This option will meet the present and some future forecasted district heating demand, and, in addition, will allow room for the installation of the recommended combined cycle power plant at a future date.

I. K&M SUBCONTRACT TASK DESCRIPTION

This Final Report was prepared by K&M Engineering and Consulting Corporation under subcontract to RCG/Hagler, Bailly, Inc. This work was funded by the U.S. Agency for International Development (USAID) Eastern Europe Regional Energy Efficiency Program.

1.0 The GRIRO Project - Rehabilitation of Thermal Power Station

GRIRO S.A. specializes in the manufacture of heavy steel products: storage tanks, pressure vessels, heat exchangers, etc. primarily for the petrochemical industry. They are an international firm with over 50% of their products exported. GRIRO has had offices in the U.S. and regularly subcontracts to major U.S. engineering and construction companies. The firm carries a one to two year backlog of orders and earns the majority of its income in hard currency, of which it is permitted to retain a portion. The company participated in the original USAID-sponsored emergency energy assistance program and has since implemented most of the recommendations of that program, including the appointment of an energy manager trained under the USAID project. GRIRO is the only firm in Romania licensed under U.S. ASME code for the manufacture and repair of ASME-coded pressure vessels. It has a strong future and very high potential for export earnings. In fact, GRIRO has prospered over the past few years even though the general economy of Romania was in sharp decline, thus they have the capital and desire to make capital investments in their facilities.

The existing thermo-power station is of 1920's vintage with 6 Babcock & Wilcox boilers, one Romanian boiler, one Brown-Bovari steam turbine, and one Russian steam turbine. The B&W boilers and the Brown-Bovari turbine have all exceeded their useful life and need replacement. The Romanian boiler needs modification to burn fuel oil (only fuel gas now). The thermo-power station is unreliable and boilers are regularly shut down by state inspectors for maintenance. GRIRO commissioned a feasibility study by the state research agency ISPE (the state agency for design and research of power equipment) to develop several scenarios and possible design alternatives. The report was severely lacking in any insight outside of normal supply-side generation capacity, and in looking at the total picture of the thermo-station loads. The following factors need to be considered:

- The thermo-power station capacity is designed for thermal load-following operation in winter months. Power demand is not considered. In fact, one alternative is to generate only thermal energy and buy power from the RENEL grid. Selling of excess power is not considered.

- Forecasted capacity is based on current consumption plus assumptions for growth; no efficiency improvements are considered to mitigate installing additional capacity.

- Turndown capability is minimal. Large equipment of high capacity is recommended for ultimate future loads. Interim smaller loads are not taken into consideration.

2.0 Scope of Work

TASK 1 Coordinate team mobilization with RCG/Hagler, Bailly and review existing reports and documents available in Washington, DC.

TASK 2 Verify and update existing demand forecasts for both electricity and thermal energy used by the plant, and exported to other consumers. These demand forecasts need to reflect:

- Energy efficiency gains through application of low-cost/no-cost measures, energy efficiency equipment, and process energy efficiency improvement.

- Forecasted demand for export customers (power and thermal), also considering energy efficiency gains.

- Potential export (primarily power) sales and tariff barriers.

TASK 3 Undertake level of effort preliminary technical feasibility assessment of alternative cogeneration options with Romanian counterparts at the GRIRO Plant.

TASK 4 Equipment Referrals - Develop a comprehensive list of U.S. manufacturers that could supply U.S. manufactured equipment to GRIRO and assist GRIRO with coordination of RFQ's and exchange of information.

TASK 5 Develop alternative financing options.

TASK 6 Establish comparative ranking criteria and rank order of no more than four alternative cogeneration options.

TASK 7 Prepare preliminary list for turbine island, boiler island, and major mechanical balance of plant equipment identifying required changes or upgrading.

TASK 8 Prepare Final Report highlighting findings and recommendations.

3.0 Deliverables

The following deliverables shall be accomplished under this subcontract:

- Draft technical feasibility report
- Draft comparative economic analysis of alternative plant configurations
- Summary of appropriate financing structures and potential sources of funds
- Preliminary equipment specifications for preferred option
- Final feasibility report

II. INTRODUCTION

1.0 Background

The USAID program in Romania is designed to foster the growth of national energy efficiency through the private sector by utilizing several avenues. One of these methods will be to provide assistance to a demonstration project in energy efficiency.

Romania faces many barriers to the adoption of industrial energy efficiency projects. As defined in the Industrial Profile Report completed under the Emergency Energy Assistance Program, these barriers include lack of capital for investment projects, technology, incentives, and sponsorship. While these barriers exist even today, much progress has been made within the country to set the stage for industrial energy-efficient investments. This progress has been most evident in the following areas:

- Energy Pricing - Energy prices for industry are now very close to world market levels, reflecting the realistic pricing of fuels by the energy sector utilities. This provides much of the needed incentive for industry to invest in energy efficiency.

- Privatization - The pace of privatization has increased and many firms are now functioning as private entities (even though the state may be the majority shareholder) responsible for their own destiny. This has put strong pressure on these firms to cut costs and become efficient.

- Reduced Central Government Controls - Along with the increasing pace of privatization, there has been a general slackening of government control over industry. Plant managers have more decision-making responsibility and retain a portion of profits for modernization and rehabilitation.

- Other - There still exists a lack of available technology, capital, and a proactive sponsor for energy efficiency. However, the situation is improving with more and more foreign companies entering Romania and seeking business arrangements. Likewise, more plant managers are seeking their own solutions and improvements without waiting for government direction.

This is an ideal time to provide the sponsorship, access to technology, and assistance with locating financing for a suitable demonstration project.

The GRIRO plant has been selected by the U.S. Agency for International Development (USAID) for a pre-feasibility study for the upgrading of the existing power plant. USAID has assigned the task of performing the study to RCG/Hagler, Bailly Inc., who has contracted K&M Engineering and Consulting Corporation. GRIRO is one of Romania's largest specialty manufacturer of pressure vessels and process equipment. They have made equipment and pressure vessels for use in plants in Romania and abroad for over 30 years. It is the only plant in Eastern Europe to have certificates of authorization from the American Society of Mechanical Engineers (ASME) for ASME U and U2 stamps, and can meet code requirements for Section VIII Divisions I and II for pressure vessels. GRIRO has had the ASME stamp authorization since 1986.

The plant was originally built in 1897 to repair locomotives. It occupies 97,500 square meters with 85,000 square meters of floor space. Production capacity is 16,000 metric tons per year; at present the plant operates at full production capacity with over 50% of the product exported. The product line includes heat exchangers, air coolers, reboilers, LPG tanks, debarkers for the pulp industry, and tanks for railway cars. The production equipment is generally very old, but includes many newer numerically-controlled machines.

The power plant located in the GRIRO facility produces electricity for GRIRO use, and in addition supplies central district heating to public housing and steam to nearby industries and a small hospital. The excess electrical energy, if available, is sold to the national electric system. The capability of supplying their own power and the need for district heating as well as the profitable operation of GRIRO has helped to keep the plant in operation, while many other similar Romanian industries have been forced to close down due to lack of business or energy shortages.

1.1 Electrical and Thermal Production Capacity

The power plant produces steam, hot water, and electricity from the boiler/turbine system. The original system capacity for the supply of district heating has been reduced due to equipment age and constant repairs to a point where the total capability of the district heating system is only 33 Gcal/hour. This is not sufficient to keep the required heat load to maintain the required temperature in the district heating system for the ambient conditions during the winter. The steam production during 1991 for GRIRO, nearby industries and the hospital was 86,387 tons. However, this demand is expected to diminish in the next few years. The electricity production capability is 7.6 MW, and GRIRO average shop normal consumption is 1.5 MW; however, with the electric furnaces in operation the shop demand is over 5 MW; the power plant usage is 0.8 MW. The balance is dispatched to the national electric system.

2.0 Objective of Study

The objective of the prefeasibility study is to review the actual conditions and study the possibility of increasing capacity by upgrading the existing equipment or by the installation of new equipment, permitting a more reliable and efficient operation that will guarantee a constant supply of district heating to public housing and ensure availability of electricity and steam to GRIRO and other users.

Several possible options have been considered in the study. The selected options have taken into consideration the forecasted thermal, electrical, and steam demand loads, as well as the maximum utilization of the existing equipment and the capability of the Romanian industry to furnish to a maximum extent the required equipment, keeping to a minimum the foreign components; this will reduce the need for hard currency that, at this time, is a problem in Romania. The availability and quality of fuels in Romania have been considered and recommendations are made on the fuels to be utilized or fuel treatment, if required. For the performance of the study, meetings with the fuel supply companies have taken place, as well as with the national electricity company and equipment manufacturers.

For the performance of the study, the following factors have been taken into consideration:

- The main purpose of the Power Plant is thermal heat production for district heating of approximately 10,000 apartments and electrical generation for the GRIRO facility. Any excess electricity output will be sold to the Romanian Electricity Co. (RENEL) grid.

- Maximum use of the existing equipment and facilities.

- The forecasted increase of district heating demand and improvements to the equipment used for district heating hot water production.

- Support the GRIRO and other users industrial steam demand.

The study, with the recommended options including support facilities, should be useful for the preliminary evaluation of the project by the multilateral and bilateral financial institutions interested in providing financing for the project.

K&M Engineering and Consulting Corporation and GRIRO power plant personnel assigned to the study have exercised their best professional judgment in accordance with technical practices normally followed in the preparation of this study. This study is based in part on information and data collected from K&M field visits to the GRIRO plant in Romania and meetings with the Ministry of Industry, the Bucharest Gas Company, and the Romanian Electricity Authority. It should be recognized, however, that the concepts and outline presented in this study must be verified during the preliminary detailed design stages and during the preparation of the final feasibility study.

III. NEED FOR THE PROJECT

1.0 Existing Facilities

Information on the design parameters of the existing equipment or piping and instrument diagrams for the plant systems are not available. The existing equipment characteristics and other information used for this study have been supplied verbally by GRIRO personnel, and the conditions of the equipment are based on site observations by K&M personnel who participated in the audit of the GRIRO power plant.

From the discussions held with the plant personnel, the main problem areas within the power plant were identified and the key problems related to energy efficiency were presented. The areas identified were as follows:

- Low gas and oil availability
- High percentage of sulfur in the available oil
- General age of equipment and loss of efficiency
- Combustion control of boilers
- Replacement of decommissioned equipment

41

The facility personnel are technically competent and aware of the plant's primary operational inefficiencies. They are also in a good position to gauge project potential given the factors of production such as labor costs, material costs and the long-term business plan. In addition, they can provide technical information required make long-term energy efficiency decisions such as the replacement of boilers or incorporation of new, more efficient equipment. The main areas that the study addressed were:

- Central Steam Boiler Area
- Turbine/Control Room Area
- Water Treatment Facility
- Cooling Towers
- Air Compressors
- Switchgear and Transformers
- Pumps Room

2.0 Existing Capability

The existing capability of electricity production of the power plant is 7.6 MWe. Of this capacity, the GRIRO facility uses an average of 1.5 MW. However, with the three furnaces in operation, this consumption can be 5 MW to 6 MW; but this is not the normal operating mode. The power plant consumes about 0.8 MW and whenever possible, the excess electricity is sold to the national grid.

One of the main problems at this time is the capability of the existing facilities to meet the required thermal demand for the district heating for public housing. With the decommissioning of the 13 Mt/h boilers and the reduced capacity of the heat exchangers due to the high number of plugged tubes that have reduced efficiency, it has been very difficult to maintain the required temperature during the winter. The maximum capability at this time is 33 Gcal/h, which is not sufficient to maintain the required water temperature needed for the severe winter conditions.

The typical weekly thermal and electrical energy production for winter is shown in Figure I (Page 77) and for a summer week in Figure II (Page 78). Based on the conditions outlined in Table II (Page 68) (ambient versus district heating temperature), on a winter day, ambient temperature (-8°C), the required district heating temperature of 124°C and a flow of 621 m^3/h cannot be maintained with the existing equipment.

The plant operates 24 hours per day, 7 days per week. The main areas of energy use include the central power station, the forging area, and the foundry area. The equipment in these areas of highest energy use is generally very old with few direct controls.

The present major equipment in the thermal power station is shown in Table I (Page 65) and a diagram shows the existing equipment arrangement in Figure III (Page 79). Most of the oil and gas is consumed in this area of the plant. There are seven boilers located in the boiler area. Six of the seven are 13 Mt/h Babcock and Wilcox boilers built in 1929. Four (4) of these 13 Mt/h boilers are no longer in service, while the remaining two have been repaired; the conditions of these boilers is very poor and under normal circumstances they would be decommissioned; however, repairs are being performed as a temporary solution. The seventh boiler is a 50 Mt/h Romanian boiler built in 1965. They all feed a common steam header with steam at 450°C and 30 atm. The steam is directed to two turbines rated at 1.6 and 6.0 MW. The 1.6 MW turbine is a Brown Boveri turbine, built in 1929, and provides extraction steam for process use. The 6.0 MW turbine is a Soviet built turbine. The maximum total fuel used by these boilers is 20 Mt/day of oil or 12,000 cubic meters per hour of gas. The central steam boiler area provides steam for the turbines for electrical production and for thermal energy requirements. The age of the boilers is a major concern. The Babcock and Wilcox boilers average about 100,000 hours of operation while they are only rated for 35,000 hours. Therefore, replacement of these boilers should be seriously considered. Like the South Bucharest Plant, GRIRO has problems with oil residuals collecting on the piping of the steam boilers. Once a year the staff chemically cleans the pipes to reduce the oil residuals.

In addition to the turbines, there are two paths of steam pressure reduction for low pressure process steam used in pressure vessel testing and oil heating. The steam pressure is reduced from 30 atmospheres to either 14 atm or 7 atm. These reduction valves also provide thermal energy for the district heating system if the turbines are not in operation. The typical consumption of low pressure steam through this system path is 3 to 4 Mt/h.

Other low pressure steam is available at 3 to 5 atmospheres from the turbines. This steam is used for heating the plant and to heat a nearby hospital. The normal consumption in the winter for this steam is 10 metric tons/h.

The plant has three heat exchangers that use the steam extracted from the turbines to heat water for use in the district heating system. The condensate from these exchangers is returned to the deaerator before returning to the boiler feed water flow.

A simplified schematic of the electrical connection between the plant's system and the national electrical system is shown in Figure IV (Page 80). The two turbines produce power at 5 kV and the national system that they are connected to uses 10 kV. Therefore, there are two 4 MVA transformers to make the connection. The system allows the plant to run on its own electric power, that of the national system or both. It also permits the electric power produced to be sold to the

43

national system.

Most of the electricity consumed by the plant is used in the foundry area. The foundry has two electric arc furnaces and one electric induction furnace. The capacity of each arc furnace is 1.5 metric tons/h of steel and they consume a maximum of 1 MW of electricity each. The induction furnace has a capacity of 1 metric ton per hour, also with a maximum demand of 1 MW.

The other major electrical equipment includes four high pressure air compressors with a maximum power consumption of 300 kW each. The air compressors are three stage and three cylinder reciprocating compressors that can deliver 45 m^3/h. There is also a 40 year old Ingersoll-Rand air compressor that is rated for 30 m^3/h at 150 kW. The air delivered by these compressors is at 7 atm of pressure and is used for the testing of pressure vessels, pneumatic controls and to supply air to the GRIRO shop and power plant. The other electricity-using equipment such as fans and pumps consume an additional 1 MW total.

Water treatment for the boilers is also a problem. City water is demineralized by a system that uses sulfuric acid (H_2SO_4). In addition to the city water, water supply is guaranteed by one 28 m^3/h and three 13 m^3/h wells. The system is limited because there is a shortage of supply of H_2SO_4. Tests are performed every hour to determine if the system needs to be flushed.

Steam Turbines/Control Room

The turbines and control room are very old. The 1.6 MW Brown Boveri (BB) steam turbine was built in 1929 and should be decommissioned. The 6MW Russian turbine, installed in 1965, is in good condition and is well maintained.

The 1.6 MW BB turbine is an extraction and condensing turbine. Circulating water cooling during the summer is provided by three existing forced draft cooling towers, two with the capacity of 500 m^3/h and the other 800 m^3/h. At the time of the survey of the power plant, one of the 500 m^3/h cooling towers was being repaired to like-new condition.

The 6 MW steam turbine is an extraction turbine; extraction steam is used for district water heating. See Figure III (Page 79).

The control room instrumentation is very old and obsolete. A detailed study of possible upgrading will be required to determine the need to replace some of the components.

Electric Load

There is about 5 MW of connected electrical load within the GRIRO shop; however, about half of this load is used for intermittent operation of the electric furnaces in the foundry. The average plant load is 1.5 MW. The power plant consumes 0.8 MW.

Some of the system changes that can be justified with an energy profile of the existing air compressors include using appropriate controls, using separate compressors to supply the low pressure air required in the plant instead of using reducing valves, replacing some of the pneumatic equipment with electric motors, using the waste heat from intercoolers and aftercoolers, and developing a maintenance program to detect and repair air leaks. The efficiency increase from just one of these measures would be significant.

3.0 Forecasted Thermal and Power Demand

The 1990 total energy production of the GRIRO cogeneration plant is shown in Figure V (Page 81). The electrical consumption of the GRIRO factory will remain at the present level for the next few years; however, it is anticipated that the thermal production will have to be increased to permit the needed improvement on the district heating system temperatures and the continuously increasing load demand.

Below is the forecast for the requirements for district heating and steam:

Steam		Mt/h Maximum	Mt/h Medium	Mt/h Minimum	Mt/y Annual
TOTAL	1992	93.9	50.2	30.1	86,387
	1996	34.7	19.08	10.7	35,000
Hot Water (GCal/h)					
TOTAL	1992	44.25	30.16	10.7	183,572
	1996	69.25	42.8	9.5	250,000
Residential	1992	25	17	9.6	127,154
	1996	50	30	8	186,038

Although the power demand the GRIRO factory is not forecasted to increase in the near future, the excess electricity production can be sold to RENEL for the national grid. The new Romanian government policy of removing all subsidiaries has allowed the increase of electricity sale price to a point that GRIRO-produced excess electricity can be sold to RENEL at a profit.

The need to increase thermal output to meet the growing district heating demand is a primary objective of this study. However, increased electricity production while meeting the thermal demand will be an additional benefit, especially considering the need for additional efficient electricity production in Romania. Many of the country's power plants are very old and inefficient and in need of replacement. RENEL, the state-owned utility, is very interested in the possibility of increasing the electrical production capability of GRIRO and in purchasing any excess electricity produced by the GRIRO power plant.

As shown in the above table, it is anticipated that the steam demand of the industry and the hospital will diminish within a few years. The forecast is as follows:

Steam Demand (T/Yr)

1991	1996
86,387	35,000

Power Factor

The power factor for the facility is generally between 84% and 90%. The structure of the electric rate specifies a penalty to be paid to the electric agency when the power factor is below 94%. The staff do not consider this a problem because GRIRO is a producer of power; they do not always have to pay this penalty and can regulate the power factor with the generators. They do have reactive capacitors for transformer stations and for some larger equipment such as the air compressors. There is opportunity to further improve the power factor throughout the plant.

IV. TECHNICAL FEASIBILITY

1.0 Availability and Quality of Fuels

One of the main problems that limits the number of possible options to upgrade the GRIRO power plant is the availability and quality of the fuels being used at GRIRO. The ideal would be to use natural gas; however, this fuel is only available at very low pressure and in limited quantities. In some cases during the winter, the gas pressure is below one atmosphere. During the time of low gas supply, oil is burned in the boilers. At this time, only the 13 t/h boilers are dual fired with gas or oil; the larger 50 t/h boiler can only burn gas although GRIRO has taken steps to incorporate oil burners in this boiler. The use of oil creates a problem because none of the existing boilers are equipped with soot removal equipment, and this operation has to be performed by hand.

The following are the characteristics of the oil available at GRIRO.

Type 70/425

Viscosity	
at 50°C max.	70
at 80°C max.	12
Freezing Point, °C	42
Flash Point, °C	90
Sediment, % max.	1.2
Suspended Solids, % max.	1.5
Ash Content, % max.	0.5
Sulfur, % max.	3.3
Heating Value, KJ/Kg	38600
Vanadium, ppm max.	100
Sodium, ppm max.	150
Water, % vol. max.	1

Oil is burned in the boilers for approximately 1000 hours a year during periods of low gas availability; oil is received at the GRIRO shop by railway and stored in tanks; new tanks are being built for additional storage. Figure VI (Page 82) shows the yearly fuel and energy consumption of the GRIRO power plant.

One of the options considered in this study is the installation of combustion turbines at GRIRO. The presently available fuel oil cannot be used as fuel in combustion turbines due to the high vanadium, solids, and sulfur contents, thus prior cleaning will be required. The cleaning of fuel oil is a fairly new technology that is being developed and one of the drawbacks is the high cost of the process. K&M has studied the possibility of cleaning the oil used at the GRIRO facility to permit operation of the proposed combustion turbines; the study indicates that the high cost of fuel cleaning will not permit an economic operation of the facility.

The limited availability of gas is a major problem. This fuel is ideal to use in combustion turbines; however, the low pressure will have to be increased to the required pressure to permit injection into the combustion turbine combustor.

During the survey, the K&M team met with managers of ROMGAZ, the government company controlling the gas supply to Bucharest, to review the possibility of increasing the volume and pressure of gas available to the GRIRO facility. At these meetings, several possible solutions were discussed. Figure VII (Page 83) shows the Bucharest gas distribution loops; the inner loop receives gas at different points from an outer loop. The distribution station close to GRIRO, 16 of February station, is a pressure reducing station, and in theory the outer loop

pressure should be between 6 to 40 bars; however, very rarely it is over 10 bars and the inner loop pressure is usually no more than 2 to 6 bars.

The possibility of installing a compressor station at 16 of February to increase pressure to the average 20 bar required by gas turbines was discussed. This idea was rejected by ROMGAZ, as this type of installation will absorb all available gas to other users and is not practical. Another idea that will require further research is the installation of a compressor station in the vicinity of 16 of February reducing station, taking suction from the outer loop to a dedicated gas line of approximately 10 km to the GRIRO plant. This concept will require additional studies beyond the scope of this report.

The gas available to the GRIRO facility is as follows:

Winter	**Summer**
150,000 m^3/day	100,000 m^3/day

Of the above, about 25% is used by the GRIRO manufactures shop and the balance by the power plant.

Based on meetings with ROMGAZ and GRIRO personnel, we have assumed that gas will not be available to fuel the combustion turbines, however, for the additional firing of the heat recovery steam generators, low pressure gas and heavy fuel oil have been used in the technical and economic analyses.

The General Manager of the Ministry of Industry & Material Resources identified a light automotive diesel oil derivative which could be an acceptable fuel source for gas turbines. This fuel has been used in the economic evaluation.

The price of diesel fuel utilized in K&M's economic evaluation of the various alternatives was 48.64 U.S. cents per gallon which approximates the average world price for fuel oil utilized by industrial utilities in most parts of the world today. In addition, K&M learned that a possibility exists for GRIRO to purchase this oil direct from the refinery with up to a 10% discount over the distribution price. However, this possible discount was not utilized by K&M in its analysis of alternatives.

Two (2) new fuel oil storage tanks are presently being erected - one has a capacity of 1000 metric tons and the second one has a storage capacity of 700 metric tons.

48

2.0 Options to be Considered

Several options are available to improve the performance of the GRIRO power plant. Each of these options involves different levels of modernization and capital investment. From the base case of upgrading only the equipment necessary to permit a more reliable operation, keeping the present thermal and electrical output without consideration for future growth, to the optimum case of increasing the output to meet the future district heating load forecast and at the same time increasing the electrical output to permit the sale of excess electricity production to RENEL, these options all satisfy the performance improvement requirements and provide a range of additional benefits.

Three general options to cover the possible variations have been studied:

Option I - Base Case Modernization

Option II - Thermal and Electric Expansion

Option III - Thermal and Electric Expansion Utilizing Gas/Oil Fired Combined Cycle Cogeneration Plant

The proposed options optimize the use of existing equipment; however, some of this equipment is very old and inefficient and will have to be upgraded or replaced regardless of the option selected. This equipment is described below. A more complete study will be required to determine, in detail, the equipment conditions prior to implementation of the recommendations. Additional recommendations are given in Section 5.4.

Steam Generators

- Provide permanent oil burners on existing 50 t/h boiler.
- Provide state-of-the-art boiler controls.
- Replace boiler tubes where necessary.
- Perform a study of the possibility of providing soot blowers and if possible install the required equipment.

Steam Turbines

- Upgrade the 6 MWe and 1.6 MWe steam turbines by providing state-of-the-art instrumentation.

49

Motor Control Centers and Control Room

- Replace motor control centers.
- Upgrade control room instrumentation.

District Water Heat Exchangers

- Replace with new equipment, regardless of the selected option. The new heat exchangers should be sized for the forecasted thermal demand of the district heating system.

Water Treatment System

- Provide a flow orifice to measure flow of demineralizer discharge.
- Update boiler make-up water treatment.

Cooling Towers

- Underground piping needs replacement.
- Repair cooling towers.

Miscellaneous Pumps

- Boiler feed pumps and drivers are in good condition, however instrumentation needs to be upgraded.
- Replace fuel oil pumps.
- District water heating pumps are in good condition, however instrumentation should be upgraded.
- Review in detail the condition of small pumps and repair or replace as required.

Control Valves

- Replace steam pressure reducing valves supply to industrial steam and testing facilities.

Miscellaneous Buildings

- Most of the buildings are in very poor condition. In some areas, the concrete has deteriorated to the point where the rebar is exposed.

- General housekeeping requirements should be improved.

3.0 Analysis and Discussion of Options

A review of the different standards covering environmental regulations for power plant emissions indicate that for the considered options no equipment for removal of sulphur will be required due to the size and the short period of time that the facility will be using oil, 1000 hours per year.

3.1 Base Case Modernization - Option I

3.1.1 Option IA

Sketch 1A (after page 129) shows this case. One new 50 Mt/h boiler will be installed to replace the six - 13 Mt/h boilers that will be decommissioned. This boiler will be capable of producing steam at 30 bar, 450°C. The output of this option is approximately the same output of the existing facility; no improvement on electrical or thermal output from the present facility will be obtained. The only advantage will be a more modern updated facility with a better plant efficiency.

This is the option with the lowest capital cost, however with the least flexibility to meet the demand; a failure of one of the boilers will reduce the thermal output by fifty percent (50%), where it would be very difficult to meet the demand if failure occurs during the winter.

With limited economic resources, this is a good option. However, the risk of equipment failure and the incapability of meeting the forecasted thermal demand should be considered in evaluating this option.

3.1.2 Option IB

This option, as well as the previous, considers the removal of the six existing 13 t/h boilers. Two 25 Mt/h boilers capable of burning gas or fuel oil will be installed. The thermal and electrical output will be similar to Option IA; however, additional flexibility for operation will be added to meet the demand during the winter or in case of boiler failure. Sketch 1B shows a diagram of this option.

The capital cost will be higher than the previous case, the only gain being the additional operating flexibility. As in the previous option, the existing upgraded

51

balance of plant equipment will be utilized with no change to the operating characteristics.

3.2 Thermal and Electric Expansion - Option II

The capital cost will be higher than the previous option. The fuels to be utilized will be similar to the ones in use today, with slightly higher consumption.

Sketch II is a diagram showing the arrangement of the equipment. Two new 55 Mt/h boilers burning gas or oil will be installed to replace the six 13 t/h decommissioned boilers. This option will increase the capacity of the power plant to 160 Mt/h, an increase of 32 Mt/h over the original capacity of 128 Mt/h; this additional capacity will permit an increase of the thermal output to meet the forecasted demand. In addition, the higher electrical output will permit the sale of electricity to the RENEL grid. The new boilers can be installed in the existing boiler room. A new 17.3 MWe steam turbine generator will be installed to replace the existing 1.6 MWe steam turbine generator that will be retired from service; some minor changes to the existing balance of plant equipment will be required for this option, a complete detailed study will be required to assess these changes.

3.3 Thermal and Electric Expansion Utilizing Gas/Oil Fired Combined Cycle Cogeneration Plant - Option III

Two different cases utilizing combustion turbines and heat recovery steam generators are considered under this option. For either case, a new fuel will be necessary for gas turbine operation. The low availability and pressure of gas does not permit consideration of this fuel for these options, and the fuel oil being utilized at this time is not compatible with the turbine operating conditions due to the high vanadium and other impurities.

3.3.1 Option IIIA

This option considers the installation of a single combined cycle power plant to be located in the existing boiler room; to allow the space required for this equipment, five of the 13 ton/h boilers will be decommissioned, keeping the existing 50 Mt/h boiler and one of the existing 13 Mt/h boilers as back-up in case of failure of the combined cycle cogeneration power plant.

52

The proposed gas turbine has a capacity at ISO conditions of 33 MWe. The turbine exhaust will discharge to a heat recovery steam generator (HRSG) producing 53 Mt/h steam at 30 bar, 410°C without supplementary (duct) firing. With partial supplementary firing at 550°C, steam performance of 70 Mt/h, 30 bar, 450°C is expected, and with full firing at 850°C, approximately 100 Mt/h (450°C) of steam will be possible.

The additional supplementary firing of the heat recovery steam generator will be required during the periods of high thermal demand. For this use, the existing gas supply or available fuel oil can be utilized; the steam conditions will permit the installation of a new 21.2 MW steam turbine generator, increasing the total electrical production capability to 49.0 MWe during the winter.

One of the problems with this type of installation is the removal of heat during the periods of low demand since the thermal output will be higher in winter than in summer; however, with the introduction of steam into the combustion turbine, this presents an advantage; steam injection (STIG) increases the combustion turbine output. In this case, during the summer the combustion turbine with steam injection will generate 51.9 MW of electricity, and the steam injection will control the NOx discharge into the atmosphere to acceptable limits. During the summer with the combustion turbine operating on STIG mode with supplementary firing on the HRSG and the two back-up boilers in operation, the total electrical output of the power plant will be 73.1 MWe.

This option meets all the ideal conditions, covers the present and forecasted district heat demand and, in addition, will permit the sale of 41 MW during the winter and 63 MW during the summer of electricity to the RENEL grid after covering the GRIRO manufacturing shop demand. Sketch IIIA shows the diagram for this option.

Experience has shown that the availability of this type of installation is over 95%; however, due to the critical service of district heating and hot water to approximately 10,000 apartments, we recommend that the existing 50 Mt/h boiler and one of the 13 Mt/h boilers be kept as a back-up in case of failure of the combustion turbine; this equipment will meet the average demand in a typical winter day.

The economic analysis will reflect the higher fuel price needed for the operation of the combustion turbine and the benefits obtained by the sale of electricity to the RENEL grid, as well as the additional revenue from the forecasted district heating demand.

3.3.2 Option IIIB

This option considers the installation of a combined cycle power plant utilizing two combustion turbines, each with a heat recovery steam generator, and the installation of a single new steam turbine generator.

Each of the proposed gas turbines has a capability of 13 MWe without steam injection and 16.0 MWe with steam injection; the total electrical output during the summer will be 33.0 MWe. Supplementary duct firing will be required to meet the winter thermal output. Similar to the previous option, the existing gas and fuel oil can be utilized for the duct firing to meet the additional heat demand. A new 17.0 MWe steam turbine generator will be installed; the total plant electrical output for this option will be 49.7 MWe during the winter and 65.1 MWe during the summer.

4.0 Recommended Option

CAPABILITY OF CONSIDERED OPTIONS				
Option	Equipment	Steam Production*	District Heating Product* (See Note)	Electrical Output MWe Winter/Summer
1A	2 - 50 Mt/h boilers	100 Mt/h	77 Gcal/h	7.6
1B	1 - 50 Mt/h 2 - 25 Mt/h boilers	100 Mt/h	77 Gcal/h	7.6
II	1 - 50 Mt/h 2 - 55 Mt/h boilers	160 Mt/h	77 Gcal/h	15.9/21.3
IIIA	1 Combustion Turbine 1 - 50 Mt/h 1 - 13 Mt/h boilers	163 Mt/h	77 Gcal/h	49.0/71.7
IIIB	2 Combustion Turbines 1 - 50 Mt/h 1 - 13 Mt/h boilers	163 Mt/h	77 Gcal/h	49.7/65.1

*Winter -8°C ambient temperature.

Note: Assumes fixed output to meet demand, higher output available for Options II, IIIA and IIIB if required.

4.1 Discussion and Recommendation

As previously mentioned, Option I A and Option I B will not increase the thermal output of the power plant; the only advantage will be the higher reliability obtained by installing new equipment and upgrading the existing 50 Mt/h boiler. The electrical generation will be the same with a very little possibility of selling energy to the RENEL grid. This option has the lowest capital cost of all the considered options and should be implemented only if financing for a larger expansion is not available.

Option II will increase the electrical capability of the existing power plant by 13.7 MW and will cover the forecasted thermal demand. The additional electrical energy will be sold to the RENEL grid. The capital cost of this option is higher than Option I A or I B and will be a good solution if financing is the limiting factor.

Option IIIA meets the existing demand and allows for future growth of district heating demand. In addition, this option will permit the highest sale of electricity to RENEL, 41 MW during the winter and 63.7 during the summer, allowing 5 MW for GRIRO use. This option meets the technical and economic conditions and it is our recommendation that this option be implemented. The technical characteristics of this option will permit an excellent flexibility of operation

55

through all operating ranges; district heating and steam outputs versus electrical outputs can be controlled to obtain the most efficient operational mode under all conditions.

Option IIIB offers more operating flexibility and reliability; however, this is the only advantage. Electrical output and internal rate of return on the investment are lower than Option IIIA; taking into consideration that the availability of combustion turbines is over 95%, additional operating flexibility cannot offset the advantages offered by Option IIIA.

4.2 Plant Description and Features

4.2.1 Configuration

The combined cycle power plant will be housed in the existing GRIRO boiler building, in the area occupied by the 5-13 Mt/h boilers being demolished at this time. The existing 50 Mt/h boiler in the southwest corner and the 13 Mt/h boiler in the northeast corner will remain in operation. A wall dividing the existing boilers from the new combustion turbine will be built inside the building prior to the start of erection of the turbine.

The building will have to be upgraded and repaired prior to the erection of the combustion turbine; the general arrangement Drawing No. G001 shows the arrangement of the new facility.

The new 21.2 MW steam turbine generator will be erected in the turbine building to allow space for the new turbine pedestal; the existing turbine pedestal in this area and the 1.6 MW turbine pedestal will have to be demolished. The general arrangement drawing shows the proposed location of this pedestal.

The existing control room will have to be upgraded to house the required controls and instrumentation for the new facility and air conditioning will have to be installed.

The equipment has been sized according to the following criteria:

- Thermal load and output
- Appropriate combustion turbine capacity availability to match the thermal load
- Optimum use of the existing facilities
- Economic optimization based on benefit - cost analysis
- Plot area constraints
- Availability of water
- Environmental considerations

56

An important consideration in sizing the plant has been the selection of commercially available gas turbines. A manufactured standard product has been selected to obtain the cost benefits of the procurement process and to meet the target schedules for delivery of equipment.

The most critical constraint in selecting the equipment has been the space availability; no additional space is available at the GRIRO facility.

The combined cycle facility is a low cost, efficient process for generating power and meeting the thermal demands. Additional advantages of the combined cycle include:

- Higher generation efficiency than steam plants
- High ratio of power output to occupied ground space
- Rapid start-up capability
- High reliability
- Good operating flexibility from minimum and maximum loadings

The recommended combined cycle facility offers the latest power plant technology with very high efficiency and reliability. Proper operation and maintenance of the facility is a decisive factor on the availability of the power plant. The personnel assigned to operate the combustion turbine should be highly trained in operations and maintenance. It is recommended that this personnel be trained for several months on an existing, similar facility prior to start-up of the combustion turbine.

Spare parts for several years of operation should be purchased with the original equipment; all spare parts for the combustion turbine and related equipment shall be purchased from the original manufacturers and no substitutes should be accepted.

4.2.2 Mechanical Systems

4.2.2.1 Combustion Turbine Generator (CTG)

The combustion turbine will be a conventional machine in the 33.1 nominal class. This sizing was selected to achieve a facility that best integrates with the existing building and equipment. This design results in an excellent thermal match while effectively utilizing the existing facilities, thus resulting in the lowest installed capital cost on a per kW basis.

The gas turbine will normally operate on light oil, utilizing heavy fuel oil and gas for the duct firing. Emissions of NOx will be controlled using low NOx combustion technology to a level of 25 ppmvd when firing

natural gas. When operating on distillate fuel, water injection will be employed to limit NOx emissions to not more than 75 ppmvd.

4.2.2.2 Steam Turbine

The steam turbine to be added at the power plant will be a 21.2 MWe combination extraction and condensing turbine, with throttle steam at 30 bar and exhausting at 0.06 bar for maximum thermal output.

The complete steam turbine generator package will include the throttle valve, speed regulator, controlled extraction valve, and uncontrolled exhaust to the condenser. The steam header, generator, lube and seal oil system is cooled by a circulating glycol solution.

4.2.2.3 Heat Recovery Steam Generator

The HRSG will be a duct fired, single pressure, natural circulation boiler. The high pressure (HP) steam will be generated at 30 bar and 450° C. The feedwater to the HP boiler will be preheated by a low temperature economizer and then a high temperature economizer.

The HRSG system is comprised of: the inlet duct from the CTG, the transition piece that increases to the full cross-section of the HRSG, superheater coils, duct burner assembly, high pressure steam drum, evaporator coil, high pressure economizer, and exhaust stack.

The HRSG is a natural circulation boiler, insulated to maintain heat losses to 1% or less. The blowdown from the HP steam drum is flashed in the continuous blow-down drum, the steam passes to the deaerator and the liquid flows to the atmospheric blow-down drum before being dumped to drain, after being cooled by make-up water.

The boiler tubes are finned to maximize heat recovery.

The HRSG stack height is governed by a number of factors including: local topography, building heights, prevailing wind directions, and permissible ground level concentrations of pollutants. It is likely to be 60 meters in height.

58

5.0 Major Equipment Preliminary Specifications

The following preliminary specifications do not include all the necessary information to request firm prices from the manufacturers, and are issued only with the purpose of obtaining preliminary pricing for the preparation of the final feasibility study prior to project implementation.

In order to obtain final firm prices from the manufacturers, additional information will be required on the detailed scope of the project, and preliminary detailed design information beyond the scope of this study will be required.

5.1 Combustion Turbine Generator

5.1.1. General

The project will include furnishing and erecting a complete combustion turbine directly coupled to a 50 Hz generator. The combustion turbine generator shall deliver approximately 33,000 kW at ISO conditions. (15°C - sea level).

The combustion turbine generator shall be designed for continuous operation with a fuel oil (which is available in Romania) of the following chemical characteristics:

Specific gravity at 20°C, max.	0.870 kg/liter x 9.8 m/s^2
Flash point, °C, min. 55	
Viscosity (kinematic), 10^{-4} m^2 e^{-1} (cSt)	4.5 - 6
Pour point °C	-15
Sediment	No
Water content % max.	0.03
Ash content % max.	0.01
Carbon %, max.	0.2
Total Sulphur content %, max.	0.25
Neutralization number mg KOH/100 cm^3, max	8
Lower heating value kcal/kg, min. 9900	

The combustion turbine exhaust will be discharged to a heat recovery steam generator to produce cogeneration steam to drive a 21.2 MW combination extraction and condensing steam turbine generator; the combustion turbine exhaust flow temperature as rated should be no less than 438°C at ISO conditions. Additional duct firing of the heat recovery steam generator will be required during the time of high thermal demand.

5.1.2 Electrical Power Requirements

- The CTG shall be suitable for continuous operation. High CTG reliability and availability under intended operating conditions are extremely important and will be major factors in the evaluation. Unit thermal efficiency should not detrimentally affect operating reliability.

- If while carrying load, the CTG unit is disconnected from the power grid, the CTG controls shall automatically re-adjust to the zero load setting, or trip and lock-out if a fault condition generated the trip. The CTG can be selectively shut down manually or resynchronized with the grid, if required. The generator breaker shall enable resynchronization of the plant after main line voltage is restored.

- The plant equipment life shall not be less than 20 years and shall be designed to operate continuously at maximum continuous rating, high efficiency and reliability.

- The design, construction, and operation of the CTG plant with regard to aqueous discharges, emissions, noise levels etc. shall be subject to constraints imposed by the national or local laws and regulations of the relevant authorities of Romania and in accordance with the World Bank environmental guidelines.

- The power station operational mode, site conditions, and electrical equipment design conditions shall be considered in equipment selection and design.

5.1.3 Sound Levels

The gas turbine generator shall be provided with silencing equipment so that the sound pressure levels do not exceed the local requirements:

Octave Band	Center Frequency-Cps	Sound Pressure Level db at 122m	Optional (See Note) S.P.L. db at 122m
1	31.5	76	73
2	63	73	70
3	125	65	61
4	250	58	53
5	500	53	48
6	1000	49	44
7	2000	46	41
8	4000	43	38
9	8000	40	34

NOTE: A price change for the supply of the plant to meet the optional Sound Pressure Level (SPL) figures given above shall be stated.

5.1.4 Safety

- The CTG manufacturer shall, prior to the shipment, insure that all safety measures and protective devices function.

- Rotating Components

  All exposed rotating components shall have suitable guard covers designed to prevent accidental contact. The guard covers shall be substantially constructed, securely fastened in place, and shall be easily removable for maintenance purposes.

- High Temperature Surfaces

  High temperature surfaces shall be covered with insulating material for personnel protection.

5.1.5 Combustion Turbine Generator

- The combustion turbine exhaust should discharge to a heat recovery steam generator to produce steam to drive a 21.2 MW combination extraction and condensing steam turbine generator. The heat recovery steam generator will have provisions for additional duct firing; the duct firing should be dual, gas or oil.

- Control of the CTG and auxiliary systems will be accomplished

from an existing climate controlled, weather tight central control room in a building provided by the Owner.

- The CTG will be installed indoors in a existing building.

- A steam injection system for power augmentation shall be supplied; the steam injection module should contain metering and shut-off valves and be self-contained on its own base plate. The vendor shall furnish all the required piping, valving, wiring and instrumentation.

- Based on a survey of the existing building, the vendor shall propose the ventilation and air intake system.

- Each rotating equipment compartment shall contain optical fire detectors and rate of rise temperature detectors to protect the equipment.

- The vendor shall furnish a complete instrumentation package, subject to Owner's approval, that will protect the entire combustion turbine and permit continuous monitoring of the operating equipment conditions.

- The vendor shall provide ladders, stairs, and platforms which meet the Romanian safety requirements for access to the equipment.

- The vendor shall provide a list with pricing of the recommended spare parts for five years of operation.

- The vendor shall include in his quotation the necessary training in a similar operating unit of the required GRIRO S.A. personnel for maintenance and operations of the GRIRO S.A. combined cycle power plant.

5.1.6 Overall Responsibility

- A single Contractor could be retained with overall responsibility to provide engineering coordination of combustion turbine, generator, switchgear, and any mechanical components. The Contractor has the responsibility for the operational mechanical integrity of all equipment. He would handle and expedite drawings, supervise, and coordinate all tests as they pertain to the CTG package as required.

- Electrical apparatus, equipment, devices and wiring shall be suitably enclosed in vermin-proof enclosures.

- The Contractor should carry out the Protective Relaying System Coordination with GRIRO S.A. and the Romanian Electricity Authority; and the Electrical Systems Stability Study to ensure that the new generating units shall operate successfully in parallel and that no adverse stability problems shall arise from their introduction onto the Romanian Electricity Authority grid system.

- The gas turbine generator should be capable of performing 300 starts/year for 20 years for a lifetime total of 6000 starts.

- The unit should be capable of rapid start and shall have black start capability.

- Vibration monitoring system (Bentley Nevada proximity type or equivalent) should be provided. Each bearing, including gear and generator, shall include multiple sensors. Under unfiltered and steady state conditions, the normal running velocity levels shall typically be less than 0.64 cm/sec., with alarm at 1.27 cm/sec. and trip at 2.54 cm/sec. Under transient conditions, the vibration levels shall not exceed 1.0 cm/sec.

- The critical speeds of the rotor assembly shall be at least 20% above or below the operating speed of the unit.

- The smoke density of the turbine exhaust shall not exceed the ASTM-D-2156 Smoke Spot (Bachrach) Number 4.5.

5.2 Heat Recovery Steam Generator

5.2.1 General

The project will include furnishing and erecting a vertical single pressure heat recovery steam generator designed to remove heat from the combustion turbine exhaust and generate:

- Steam for power production in a steam turbine generator.

- Steam for power augmentation in the combustion turbine.

Provisions for partial and full duct firing using fuel oil or gas shall be incorporated in the design.

Due to the reduced space available for the HRSG in the existing building, the design should minimize the floor surface area occupied by this equipment; drawings showing plans and elevations shall be provided with the proposal.

The approximate CGT exhaust conditions under rated power of ISO conditions are:

- Exhaust Flow - 447.0 x 10^3 kg/h
- Exhaust Temperature 438°C

- The vendor shall furnish the thermal production capability of the heat recovery steam generator at 30 bar, 450°C using partial and full duct firing, and the pressure and thermal production capability steam pressure and temperature without duct firing.

- The vertical HRSG heat absorbing sections will be contained within shop assembled ductwork/casing modules. Each module shall incorporate pressure parts and interconnecting piping, baffles, insulation, liners and ductwork casing; the modules will minimize the field erection time. The HRSG shall be complete with the following:

  - All heat transfer and pressure parts
  - Inlet and outlet duct
  - Necessary expansion joints
  - Self supporting exhaust stack including electric grounding
  - Steel drums, water columns, gauges, glasses, level indicators and all the required instrumentation, local and in the central control room
  - Pressure, temperature and flow transmitters
  - Deaerator
  - Desuperheater assembly
  - Platform ladders and stairs
  - All piping, from valves and instruments for safe and reliable operation of the boiler
  - Safety relief valves and silencers

- All steam drums will be welded construction, fabricated from carbon steel plate and equipped with manways at each end. Drum internals shall include primary centrifugal steam separators and secondary Chevron-type steam dryers to provide suitable steam purity. The steam drums shall be provided with internal distribution piping for feedwater, blowdown and chemical feed. The steam drums shall be completely insulated on the outside.

- The furnished HRSG shall be a conventional natural circulation evaporator requiring no circulating pump. The HRSG shall be fully drainable. Large diameter tubes shall be used to minimize the effect of scaling; all tubes in the economizer shall be welded to headers.

- All the necessary ductwork will be provided to make the transitions between the heat recovery components. All ductwork shall include double cased construction that includes insulation.

- The exhaust stack shall be self-supporting, all welded construction with allowance for corrosion. The stack shall include service platforms, access ladders, sampling points and service listing. The stack should be insulated to prevent the gases cooling below the due point within the stack.

5.3 Steam Turbine Generator

5.3.1 General

The project will include a complete combination extraction and condensing steam turbine directly coupled to a 50 Hz, 17.1 MWe generator.

The turbine generator should be designed to operate with 30 bar, 450 °C steam; the controlled extraction steam will discharge to district water heating exchangers operating at various load conditions, and the condensing to a surface condenser.

The turbine generator will take throttle steam at 30 bar, 450°C; the steam turbine should be designed to meet variable summer and winter demands by condensing excess steam; the maximum steam rate, corresponding to CTG and boilers in operation will be 87.8 Mt/h for winter and 67.8 Mt/h during the summer.

5.3.2 Description

The complete steam turbine generator package will include throttle valve, speed regulator, controlled extraction and uncontrolled exhaust to the surface condenser, generator, lube and seal oil systems.

5.3.3 System Operation

There are two modes of operation, summer and winter. During the summer mode the steam turbine will condense any excess steam not utilized for district heating or combustion turbine steam injection; during the winter the condenser will be utilized as needed to condense any excess steam not used for district heating and cogeneration steam.

5.4 Existing Equipment Rehabilitation

Some of the existing equipment needs urgent rehabilitation to continue operating. The following are recommendations based on visual observations; a more detailed inspection should be performed to verify the condition of the equipment; final recommendations for repair should be made based on this detailed inspection; and the possible use of the existing equipment in conjunction with the new equipment to be installed for the new combined cycle facility should be considered.

5.4.1 Mechanical

Steam Generators

- The existing 50 Mt/h steam generator should be modified for dual firing (oil/gas).
- Sootblowers should be installed and/or provided on the existing steam generators.
- Boiler tubes should be replaced where required. When the decision is made to use the existing steam generators, they should be acid cleaned prior to placing same back in service.
- Relocate the fuel oil pumps from present locations, due to fire hazards and/or explosion; new pumps may be required.

Miscellaneous Pumps

- Upgrading of the existing boiler feed and condensate pump is required.

Condensate Return System

- The replacement or repair of the steam and condensate piping to the district water heating system should be done, to prevent unnecessary losses.

- Steam traps must be installed on the condensate return piping of the district water heating system.

District Water Heat Exchangers

- Replace the existing district water heat exchangers. The new heat exchangers should be designed for the maximum capacity of the upgraded system.

Water Treatment System

- Provide a flow orifice on the demineralizer discharge, to enable determination of the demineralizer capacity.

- Obtain a sufficient storage supply of sulfuric acid to prevent any shortcomings when required for anion resin regeneration.

Cooling Towers

- Repair or replace defective underground cooling water piping.

- Rebuild cooling tower.

5.4.2 Electrical

- Replace the existing 4 MVA and 10/5 kVA transformers, due to their unreliability.

- Replace existing motor control centers.

- Replace existing cables, and upgrade control room to state-of-the-art conditions.

- Repair or replace defective cooling tower fans.

5.4.3 Instrumentation and Controls

- Provide instrumentation/controls on the boiler feed and condensate pumps.
- Provide state-of-the-art boiler controls.
- Upgrade 6 MW steam turbines with state-of-the-art controls.
- Repair or replace the steam pressure control valves on the steam supply line to the district heating system.

5.4.4 Civil Works

- Repair cooling tower structure.
- Repair existing buildings, such as the boiler room, control room, etc.

V. ENVIRONMENTAL IMPACT ASSESSMENT

1.0 General

The European Council Directive L 336/1 of November 24, 1988 limits the emissions of certain pollutants into the air from large combustion plants; this directive includes the limitations given on directive L 229/30 of July 15, 1980 on air quality values and guide values for sulphur dioxide and suspended particles and the Council Directive L 87/1 on air quality standards for nitrogen dioxide of March 3, 1985.

These directives shall apply to combustion plants, the rated thermal input of which is equal to or greater than 50 MW thermal, irrespective of the type of fuel used (solid, liquid or gaseous). In all cases, the addition of new boilers or the installation of a combined cycle power plant is environmentally acceptable, meeting the European Community and the Romanian standards (if and when such standards exist).

Please note that for the purpose of this study, the assumption is being made that the European Council Directives for limitation of emissions of certain pollutants into the air applies also in Romania. In all cases described, environmental requirements of the European Community and the Romanian government will be met.

2.0 Air Quality

Impacts to ambient air quality during the construction phase are anticipated to be moderate. Temporary increases in dust loading can be expected, but no irreversible impacts to ambient air quality are expected to occur. During operation, it is anticipated that the installation of the new gas turbine unit and retirement of the existing steam boilers will result in a noticeable improvement in ambient air quality, especially with respect to nitrogen oxides. The new unit has projected emissions that are well within the established guidelines.

3.0 Water/Wastewater Discharge Quality

No adverse water and/or wastewater impacts are expected for the proposed project. Because the gas turbine combined cycle unit is essentially a replacement in kind, additional water consumption should be minor. The proposed project will not cause any additional impact to the existing cooling towers since any extra steam which becomes available in the summer will be injected into the gas turbine, thereby increasing the gas turbine electrical output.

4.0 Noise and Other Social Impacts

No additional noise impacts are predicted at the GRIRO thermal power plant. No adverse noise impacts are anticipated as a result of operation of the proposed gas turbine combined cycle installation.

VI. PROJECT COST AND SCHEDULE

1.0 Scope Definition

Two cost estimates for each option were prepared for the same scope of work. The basis of the first estimate was to maximize the Romanian (local) supply for major mechanical and electrical equipments. The second estimate used competitive international bidding to determine the costs for major mechanical and electrical equipments.

The scope of the cost estimate is defined by the general arrangement drawings, major equipment list and process diagrams which are included in the technical description part of this study.

2.0 Estimate Basis

2.1 Quantities

Quantities were available for major and electrical equipment. Allowances

were provided for civil, mechanical, and electrical works based on the sharing of existing facilities by the new equipment and the experience gained from a similar power plant design in a Central European country.

2.2 Equipment and Material Prices

Budgetary quotes from manufacturers were obtained for gas turbine generators, steam turbine generators, heat recovery steam generators, major pumps, and heat exchangers. The quotes were obtained from manufacturers in the United States or Western Europe and Romania. The industries in Romania have the capability of supplying this equipment with the exception of the gas turbine generators. Some materials for the balance of plant will have to be imported by the Romanian manufacturers.

2.3 Installation Labor

Manhour productivity rates and manual labor rates are based on bid proposals by Central Europe contractors for recent power plant construction. The manual composite labor rate used is US$5/hour and includes salary, fringe benefits, non-manual supervision, construction support items such as equipment and temporary facilities and services required by construction forces and contractor profit. See Table VI-1 (page 37) for determination of the manual labor rate of $5/hour.

2.4 Other Cost Items

- Freight, Marine Insurance and Local Transportation costs for major plant equipment are included at 12% FOB factory costs for international supply. Freight and Local Transportation costs for major plant equipment are included at 9% FOB factory costs for Romanian supply.

- Costs for spare parts are included at 3% of plant equipment costs.

- Project A/E services are included of 6% of construction cost and this percentage is based on estimates in recent feasibility studies for similar power plants.

- Insurance costs for builders risk, third party liabilities are included at 2% of construction costs.

- Contingency costs are estimated at 10% of major mechanical and electrical equipment and 20% of remainder of project construction costs.

70

2.5 Future Escalation

Future escalation has not been considered in this study. The Benefit/Cost Analyses in Section VII use present day investment costs and present values for comparing the design options.

2.6 Custom Duty

The level of Romanian custom duties for imported plant equipment at the outset of the study effort was 15 percent. This figure was utilized for all economic analyses and calculations in this prefeasibility report. However, this level is subject to change on short notice by appropriate taxing authorities, and under certain circumstances can even be waived as provided under Romanian Foreign Investment Law No. 35/3. For instance, in amendments adopted in June of 1993, imported machinery, equipment, and installations are exempt from import customs duties provided that such imported items do not exceed the equity contribution of the foreign investor.

2.7 Owner Costs

An allowance has been provided for Owner costs such as:

- Project development and feasibility study cost
- Owner supervision and start-up costs
- Operating costs that can be capitalized

2.8 Foreign/Local Currency Split

Two scenarios have been used for major plant equipment cost estimates: one is maximizing the use of Romanian suppliers and the other is the use of international or foreign suppliers. Insurance costs for Builders Risk and Third Party Liabilities and 50% of the Project A/E services are assumed to be in foreign currency. The remainder of costs, such as field erection, specialty subcontractors, plant materials and 50% of the Project A/E services are assumed to be in local currency. In the following Section 3.0, the Summary of Project Costs shows the amounts required in US $ and Lei for each option.

2.9 Exclusions

The project cost estimates do not include items such as:

- Renovations to existing plant other than equipment requiring replacement
- Interest during construction
- Future or forward escalation
- Financing costs such as commitment fee, arrangement for exposure fee, and equity placement, and other financial advisory fees
- VAT
- Working capital

TABLE VI-1
GRIRO PROJECT, ROMANIA
Manual Composite Labor Rate Development

In the U.S.A., the average construction distributable cost for power plants is 75% of construction labor. Therefore, the composite labor rate breakdown for construction labor is as follows:

Wages (Including Fringes)	$24.00/h
Distributable Cost (75%)	18.00/h
Total	$42.00/h

The distributable cost breakdown of 18.00/h is as follows:

- Non Manual - Construction Supervision, Engineering and Administration, 1/3 or $6.00/h
- Other Distributables - Temporary Construction Facilities, Miscellaneous Construction Services, Construction Equipment and Tools, 2/3 or $12.00/h (50% Labor, 50% Material)

USA		ROMANIA	
	$/h		$/h
Wages including Fringes	24.00	Wages incl. Fringes	1.00
Non-Manual 25%x24.00 =	6.00	Non Manual	1.00
		Other Distri.	
Other Distr.			
Temp. Construction Facilities		Temp. Constr. Facil.	
Misc. Construction Services		Misc. Constr. Serv.	
Construction Equipment & Tools		Const. Equip. & Tools	
Material	6.00	Material	2.00
Labor	6.00	Labor	0.50
Total (Composite Labor Rate)	42.00	Total (Composite Labor Rate)	4.50
		Add 10% Profit	0.50
			5.00 or
			3900 Lei/h

Note: 780 Lei = 1 US$

92

3.0 Summary of Project Costs (Includes Interest During Construction)

The project costs in present day 1993 dollars for the options are as follows:

(In Millions)

Maximizing Romanian (Local) Supply				
	Foreign currency	Local Currency		
Options	US $	Equiv. US $	Lei	Total US $
IA	.26	1.85	1,443	2.11
IB	.27	2.08	1,622	2.35
II	.73	4.81	3,752	5.54
IIIA	29.37	8.43	6,575	37.80
IIIB	33.16	9.20	7,176	42.36
International Supply				
	Foreign currency	Local Currency		
Options	US $	Equiv. US $	Lei	Total US $
IA	3.35	1.29	1,006	4.64
IB	3.36	1.32	1,030	4.68
II	10.52	2.16	1,685	12.68
IIIA	36.67	5.23	4,079	41.90
IIIB	40.46	6.00	4,680	46.46

For the details of the cost estimates, please refer to Table VI-2 (page 93).

4.0 Project Milestone Schedule

4.1 Introduction

The Preliminary Project Milestone Schedule has been prepared for the design and construction of the GRIRO S.A. power plant. The schedule, which is based on plant size and configuration as described in other sections of this report, considers the location and general physical conditions of the building, construction access, manufacturing, and delivery time for the major equipment, the requirements of international competitive bidding and other factors.

The schedule is based on a replicated contracting plan and includes separate contracts for:

73

- Project A/E Services
  - Conceptual Engineering
  - Technical Specifications
  - Procurement Services
  - Construction Management Services
- Gas Turbines
  - Supply and Erection
- Heat Recovery Steam Generators (HRSG)
  - Supply and Erection
- Steam Turbine Generator and Condenser
  - Supply and Erection
- Civil Works
  - Detail Design
  - Material Supply and Erection
- Mechanical and Electrical Works
  - Detail Design
  - Material Supply and Erection
- Switchyard
  - Detail Design
  - Material Supply and Erection
- Demolition
- Insurance
  - Project Wrap-up Insurance

The sequence, duration and relationship among the activities displayed on the schedules is based on the need to purchase long lead time equipment, a design and process which depends on the systematic and logical flow of design information; and a procurement process which will be extended because of the requirements of the review and approval

process imposed by the international lending agencies.

The engineering and procurement process requires a significant coordination effort, as much of the detailed design information will be supplied by equipment manufacturers who will be located throughout the industrial world. Specifications and other design criteria provided by the Project Architect Engineer (A/E) will be prepared in such a manner so as to maximize the number of equipment and material manufacturers who could submit proposals, yet maintain the desired operating parameters of the facilities.

For the purpose of clarity, the interrelationships among the design disciplines during the design process has been simplified in the schedules provided. The design of the plant will heavily depend on the specific combustion turbines, steam turbines, and heat recovery steam generators selected. The logic followed in schedule development is described below.

The combustion turbine specification and specific operating parameters, provided by the selected gas turbine manufacturer, will be used in part as the design criteria by the heat recovery steam generator (HRSG) manufacturer. The HRSG manufacturer will in turn provide design and operating information to steam turbine manufacturers, to be used for both proposal preparation and final design.

In order to accelerate the design and procurement process, the selection of the combustion turbine, HRSG, and steam turbine suppliers occurs somewhat in parallel rather than in series. This is possible because the specifications prepared by the project A/E are tailored to provide enough information for the various equipment manufacturers to prepare the major portion of their proposals, which can then be modified, as necessary, as contracts for major equipment are awarded and specific design and operating parameters are available.

Upon the selection of the major mechanical components, the specifications and conceptual design can be completed for the other engineering disciplines, and bid packages issued to contractors interested and qualified to provide civil mechanical/electrical, and other necessary equipment, materials, and services.

As these contracts are awarded, there is a continued and active coordination effort required by the project A/E to ensure the various project contractors are providing the necessary design information in support of the integrated design effort, as scheduled and in specified detail. The project A/E responsibilities will include the review and approval of detail designs and specifications.

As the project moves from the design to the manufacturing and supply stage, the project A/E will monitor the manufacturing process to ensure quality controls are followed and equipment is delivered as scheduled.

During the construction stage, the project A/E will provide construction management services in support of the client assuring that the construction effort meets all contractual obligations and the plant operates and performs as designed.

4.2 Plant Schedules

The Milestone Schedule developed for GRIRO S.A. power plant shows the sequence of activities and overall duration of 36 months. The current critical path evaluated is shown through the purchase order and delivery of steam turbines. As the combustion turbine market is quite volatile, the actual delivery time may be equal or longer in duration than that for the steam turbine. Though the actual implementation schedule cannot be prepared until later in the project development process, based on experience working with international financing institutions, equipment suppliers, and contractors, the schedule duration displayed should be attainable under normal conditions.

The actual duration for project implementation will in a great part be controlled by the lead times for major pieces of equipment which will be dictated by the supply and demand situation at the time of purchase.

With the above in mind, plus the thought of producing more electricity for resale to the national grid, Case A is the more attractive option.

In addition, more thermal heat is produced, thereby providing a means to accommodate possible increases in thermal heat demand and making the GRIRO thermal power plant project the first privatized power producing company in Romania.

76

ACTIVITY DESCRIPTION
COMBUSTION TURBINE
PRELIMINARY ENGINEERING
COMBUSTION TURBINE SPEC.
COMBUSTION TURBINE (RFP)
COMBUSTION TURBINE PROPOSAL PREPARATION
COMBUSTION TURBINE EVAL/AWARD
HRSG
HRSG SPEC
HRSG (RFP)
HRSG PROPOSAL PREPARATION
HRSG EVAL/AWARD
STEAM TURBINE
STEAM TURBINE SPEC
STEAM TURBINE (RFP)
STEAM TURBINE PROPOSAL PREP.
STEAM TURBINE EVAL/AWARD
MECHANICAL/ELECTRICAL
MECHANICAL SPECS
ELECTRICAL SPECS
EQUIPMENT LAYOUT
FLOW DIAGRAMS
I & C SPECS
PIPING LAYOUT
P & I D
ELECTRICAL SINGLELINES
MECH/ELEC (RFP)
MECHANICAL/ELECTRICAL PROPOSAL PREPARATION
MECHANICAL/ELECTRICAL EVAL/AWARD
CIVIL
CIVIL SPECS
CIVIL (RFP)
CIVIL WORKS PROPOSAL PREPARATION
CIVIL EVAL/AWARD
SWITCHYARD
SWITCHYARD LAYOUT
SWITCHYARD SPEC.
SWITCHYARD (RFP)
SWITCHYARD PROPOSAL PREP.
SWITCHYARD CONTRACT EVAL/APPROVE

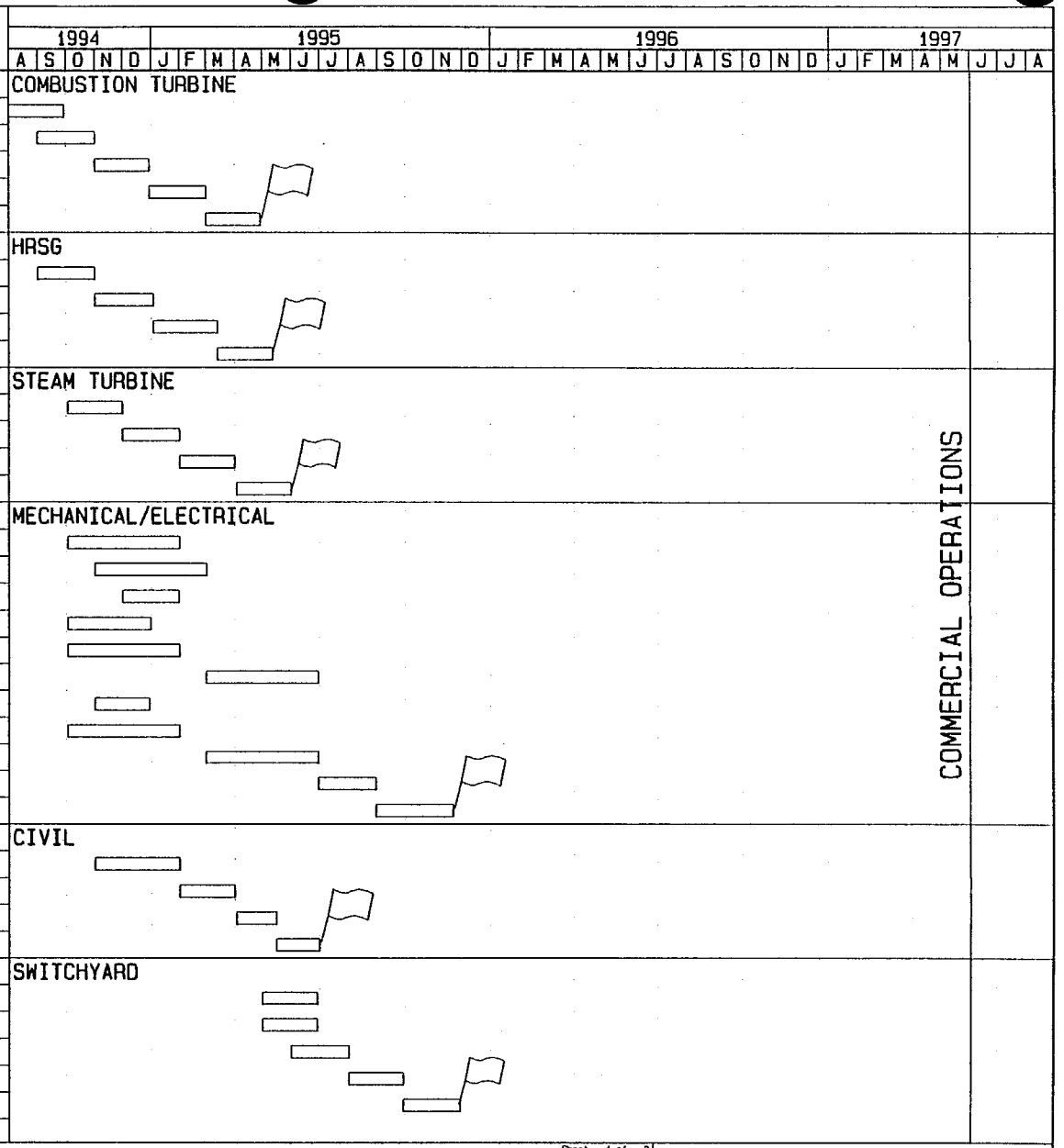

Plot Date 9SEP93
Data Date 1AUG94
Project Start 1AUG92
Project Finish 30MAY97

(c) Primavera Systems, Inc.

Activity Bar
Critical Activity
Milestone/Flag Act

GAIR

Sheet 1 of 3

GAIRO S.A. COMBINED CYCLE / COGENERATION POWER STATION MILESTONE SUMMARY SCHEDULE

K&M ENGINEERING AND CONSULTING CORPORATION

Date	Revision	Checked	Approved

F:\APPS\P3DATA\1060\GRIABC1A

ACTIVITY DESCRIPTION
INSURANCE
INSURANCE REQ
INSURANCE (RFP)
INSURANCE PACKAGE
INSURANCE EVAL/AWARD
DEMOLITION
DEMOLITION SPECIFICATION
DEMOLITION (RFP)
PROPOSAL PREPARATION
REVIEW/AWARD
COMBUSTION TURBINE
COMBUSTION TURBINE FAB/DELIV
COMBUSTION TURBINE ERECTION
COMBUSTION TURBINE START-UP/TESTING
HRSG
HRSG FABRICATION/DELIV
HRSG ERECTION
HRSG START UP/TESTING
STEAM TURBINE
STEAM TURBINE FAB/DELIV
STEAM TURBINE ERECTION
STEAM TURBINE START UP/TESTING
MECHANICAL/ELECTRICAL
DETAIL MECH. DESIGN
DETAIL ELECTRICAL DESIGN
MECH AND ELEC PURCH/DELIV
MECHANICAL EQUIPMENT INSTALL
ELECT. EQUIPMENT INSTALL.
PIPING INSTALL
INSTRUMENTATION INSTALL
MECHANICAL & ELECTRICAL STARTUP/TESTING
CIVIL
CIVIL WORKS DESIGN DETAIL PRIMARY
CIVIL WORKS DESIGN DETAIL SECONDARY
BUILDING PREPARATION
CIVIL WORKS MAJOR FOUNDATIONS
CIVIL WORKS UNDERGROUND UTILITIES
SWITCHYARD
SWITCHYARD FABRICATE & DELIV

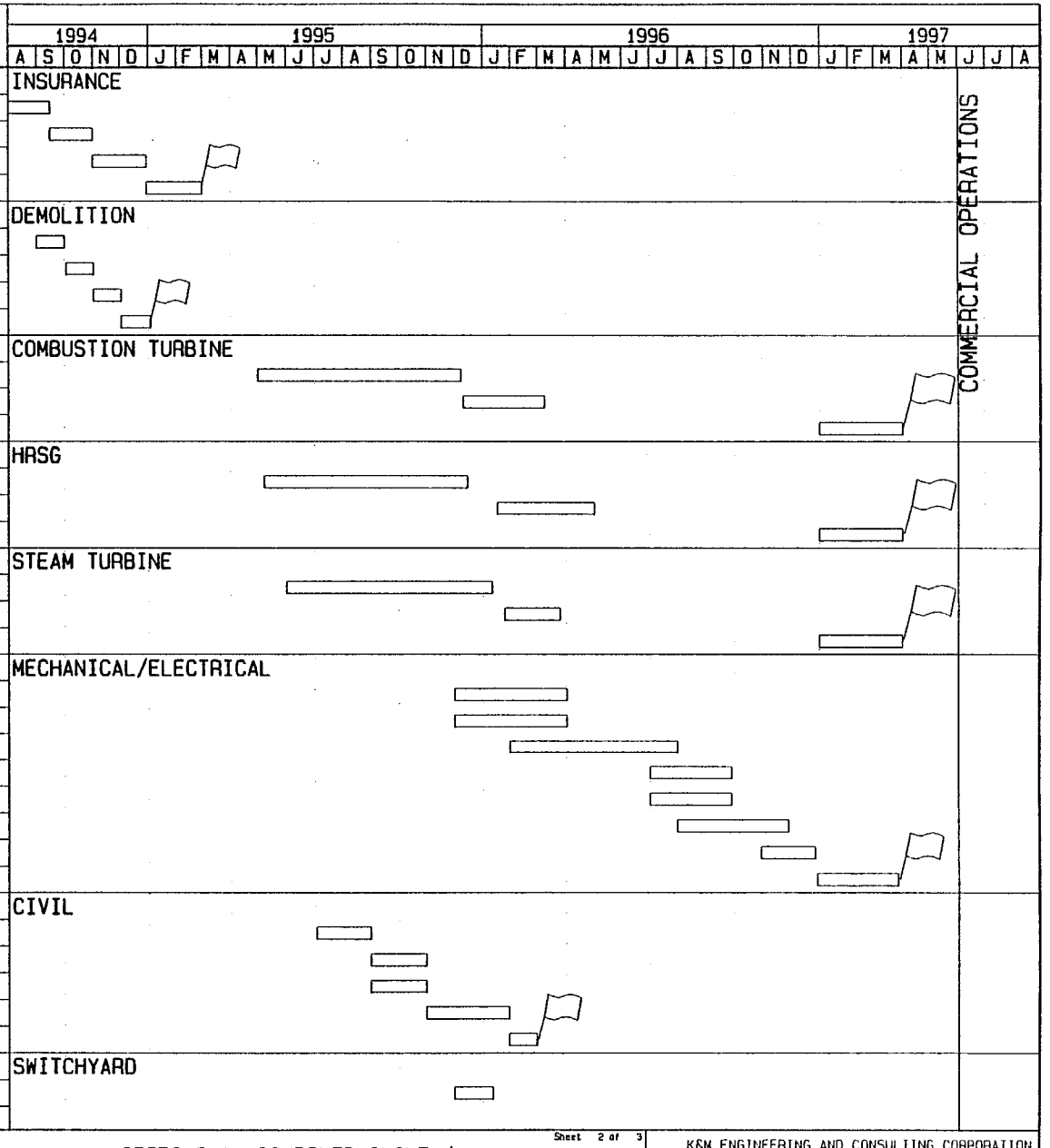

Plot Date 9SEP93
Data Date 1AUG94
Project Start 1AUG92
Project Finish 30MAY97

(c) Primavera Systems, Inc.

Activity Bar
Critical Activity
Milestone/Flag Act

GRIA

Sheet 2 of 3

GRIRO S.A. COMBINED CYCLE / COGENERATION POWER STATION MILESTONE SUMMARY SCHEDULE

K&M ENGINEERING AND CONSULTING CORPORATION

Date	Revision	Checked	Approved

F:\APPS\P30ATA\1060\GRIRBC1A

78

ACTIVITY DESCRIPTION	1994	1995	1996	1997
	A S O N D	J F M A M J J A S O N D	J F M A M J J A S O N D	J F M A M J J A
	SWITCHYARD			
SWITCHYARD ERECTION				
SWITCHYARD START UP/TEST				
	DEMOLITION			
DEMOLISH & REMOVE				
AS BUILT DRAWINGS				

COMMERCIAL OPERATIONS

Plot Date 9SEP93
Data Date 1AUG94
Project Start 1AUG92
Project Finish 30MAY97

(c) Primavera Systems, Inc.

Activity Bar
Critical Activity
Milestone/Flag Act

GRIRO S.A. COMBINED CYCLE / COGENERATION POWER STATION
MILESTONE SUMMARY SCHEDULE

Sheet 3 of 3

GRIR

K&N ENGINEERING AND CONSULTING CORPORATION

Date	Revision	Checked	Approved

F:\APPS\P30ATA\1060\GRIR0C1A

79

VII. ECONOMIC ANALYSIS

1.0 Benefit-Cost Analysis of Options

Benefit-cost analyses were performed for the five Options IA, IB, II, IIIA and IIIB. A discount rate of 9% and an economic life of 20 years was used in these analyses. Project schedules of two years were used for Options IA, IB and II, and three years for Options IIIA and IIIB.

Present values of the additional benefits and plant costs were determined for comparison between the options.

The benefits are the additional sales of electricity and heat experienced when the new power station is put into operation in 1996 or 1997.

The costs are additional, also, and include:

- Investment costs, made up of existing plant upgrades and construction of new facilities.
- Fuel consumption
- Maintenance costs estimated at 1.5% of investment costs.
- Factory overhead costs also estimated at 1.5% of investment costs.

These analyses simulated the operation of the new plants which meet the heat supply and electricity demands furnished by Griro S.A. Furthermore, the additional benefits and costs were determined for each option from a base which is the power plant, today, and the 1992 production rates of

Electric power	-	23.6 GWh
Heat	-	296,600 G cal
Fuel consumption	-	
Fuel oil	-	398 Mt
Natural gas	-	48.8 million m^3

The Benefit/ Cost Analyses are based on the rates for electricity, heat and fuel as follows[1]:

[1] Fax from Serban Stree, GRIRO, to K&M Engineering and Consulting Corporation, 23 July 1993, "Cost Components Gcal (in lei)".

Electricity	$.035/kWh	(28 Lei/kWh)
Heat Supply	$9.68/Gcal	(7248 Lei/Gcal)
Fuel:		
Light Oil	$.128/l	(100 Lei/liter)
Heavy Oil	71,800 Lei/Mt (Based on World Price of $92/mt)	
Natural Gas	11.7 Lei/m^3 (Based on World Price of $15/1000m3)	

The summary of the Benefit/ Cost Analyses are as follows:

TABLE VII-1

Options	IA	IB	II	IIIA	IIIB
Investment Costs Based on Romanian Supply of Equipment and Materials					
Benefits (Mil Lei)	21,735	21,735	37,075	95,562	79,448
(Mil Dollars)	27.404	27.404	47.532	122.515	108.856
Electric and Heat Sales Present Value (PV)					
Costs (Mil Lei)	7,774	7,943	23,924	64,811	63,777
(Mil Dollars)	9.967	10.183	30.672	83.091	81.765
Investment, Fuel, Maintenance, Factory Overhead					
PV Benefits/PV Costs	2.796	2.736	1.550	1.474	1.246
Investment Costs Based on International Supply of Equipment and Materials					
Benefits (Mil Lei)	21,735	21,735	37,075	95,562	79,448
(Mil Dollars)	27.865	27.865	47.532	122.515	101.856
Electric and Heat Sales Present Value (PV)					
Costs (Mil Lei)	9,203	9,259	27,958	66,995	65,961
(Mil Dollars)	11.799	11.871	35.844	85.891	84.565
Investment, Fuel, Maintenance, Factory Overhead					
PV Benefits/PV Costs	2.362	2.347	1.326	1.426	1.204

The following observations can be made:

- Romanian Supply is more economical than International Supply because the equipment costs are lower. For all of the options the Benefit/ Cost Ratios are higher for Romanian supply.

- All of the options have more benefits than costs. Option IA Romanian Supply is the most beneficial on this basis, however this option generates little electricity.

- Option IIIA generates the most electricity, the benefit/costs ratio is very favorable (1.474) and the demand for additional electricity in the region of this plant exists.

- For Option IIIA the difference in performance and quality of equipment between International Supply and Romanian Supply may be sufficient to offset the lower costs experienced when construction relies on maximizing utilization of in-country supplies (64,811 mil Lei vs. 66,995 mil Lei, or a $2.8 million difference).

2.0 Economic Evaluation and Recommendation

Internal Rate of Return (IRR) was determined for each option, maximizing Romanian Supply in the first instance and competitive international supply in the second instance. For the calculation of IRR, refer to Section VI for the description of the components of the investment costs.

The prices used in this economic evaluation of the options are:

	Unit	US $	Lei
Electricity	kWh	.0359	28
Heat Supply	Gcal	9.29	7248
Fuel			
Heavy Oil	mt	92	71,800
Natural Gas	1000 m^3	15	11,700
Light Oil	liter	.128	100

Other assumptions that have been made in performing this economic evaluation are:

- The plant life for the rehabilitated or new facilities is 20 years.

- The discount rate is 9%.

- The exchange rate is $US = 780 Lei.

- The production is additional resulting from the investment.

- Investments are in constant 1993 prices and include physical contingencies.

- The fuel estimate is for additional fuel consumption after GRIRO rehabilitation.

Summarized in Table VII-6 below are the IRR's and Present Values Cumulative Net Benefits for each of the options.

Table VII-6

Options	IA	IB	II	IIIA	IIIB
Basis - Romanian Supply of Major Equipment and Materials					
Present Values Cumulative Net Benefits $ Millions	12.89	12.62	12.03	29.75	11.83
IRR	1.120	.954	.530	.252	.171
Basis - International Supply of Major Equipment and Materials					
Present Values Cumulative Net Benefits $ Millions	11.23	11.19	7.35	26.64	8.95
IRR	.570	.565	.243	.229	.156

Tables VII-7 (Pages 120 through 129) supply the details that determine the numbers above.

It is recommended that Option IIIA Romanian Supply be selected because the present value of the cumulative net benefits is $29.75 million (the highest value of all of the options) and the IRR of 25.2% is reasonable. However, if the performance and quality of Romanian-supplied equipment is doubtful (steam turbine generator and heat exchangers) then Option IIIA International Supply should be selected because the cumulative net benefits is $26.64 million ($3.11 million less than Romanian supply) and the IRR of 22.9% is still reasonable. This option produces 516 GWh annually and a substantial portion can be sold to the RENEL grid (466 GWh).

Table VII-2 (Pages 105-115) shows the present values of additional benefits and costs for all of the options and the benefit/cost ratios. Also attached to support these benefit/cost analyses are:

- Calculated annual power and heat production and fuel consumption (Table VII-3, Page 116).
- Parameters used (Table VII-4, Page 117).
- Calculated additional benefits and costs (Table VII-5, Page 119).

VIII. ALTERNATIVE FINANCING OPTIONS

1.0 Overview of Relevant Project Development Alternatives

In today's uncertain and generally difficult investment climate in Eastern Europe, the great paradox is that oftentimes the larger the project, the easier it is to arrange financing. In the case of the GRIRO S.A. project, total project costs (as opposed to total financial requirements) for the various rehabilitation options evaluated in this preliminary feasibility study range from US$2.11 million for Option IA to US $42.36 million for Option IIIB under a scenario that attempts to maximize local Romanian supply. While Option IA possesses the highest benefit/cost ratio as well as internal rate of return for all options evaluated, it is next to impossible to arrange external financing from an international financial institution for such a project because it is simply too small to consider. For instance, the development banking group of the European Bank for Reconstruction and Development (EBRD) is really only looking for larger projects in the US$30-40 million range. Accordingly, if GRIRO decides to select either Option IA, IB, or II, it will in all probability have to arrange its own project financing through a commercial bank already familiar with doing business in Romania. The only other viable alternative is covering the foreign exchange requirements through cumbersome countertrade or barter arrangements.

On the other hand, assuming that GRIRO agrees with K&M's recommendation that Option IIIA presents the greatest opportunity for generating additional profits through the increased sale of both electricity and thermal energy while at the same time providing fully for its own energy requirements, a number of interesting financing options are possible. However, for the purposes of this preliminary analysis, K&M has only selected two project financing structures for developing a major cogeneration pilot project at the GRIRO S.A. steel fabrication facility in northwest Bucharest. Each of these approaches is briefly summarized below.

1.1 The Government-Sponsored Project Approach

In the event that privatization and free market reforms remain on a slow track in Romania, then based upon the prevailing notion that GRIRO has a social obligation and corporate commitment to provide thermal energy to at least 10,000 residential apartments in district heating zone 1 and possible additional units in zone 6, a case can be made that the Government of Romania should be prepared to provide a sovereign guarantee on all debt associated

with implementation of such a worthy social investment. Government sponsorship for this project could be justified on the following grounds: (1) it will make available to the grid approximately 60 MWe of additional installed capacity at a location where RENEL presently has difficulty providing reliable electricity; and (2) it will generate about 77 GCal/hr of thermal energy for residential users in RADAT's district heating zones 1 and 6.

Under such a scenario, GRIRO would serve as the owner and operator of the facility, possibly in partnership with RENEL and RADAT. However, the only major sources of debt financing available today for such a government-sponsored project are from either the World Bank or the European Bank for Reconstruction and Development in London. Long-term sovereign risk debt with twelve year payback period from most major export credit lending agencies is no longer available to Romania. For instance, the only window that is open for Romania today at the Export-Import Bank of the United States is the short-term insurance program. Even the short-term sovereign risk lending window requiring repayment within 360 days is presently closed for export credit financing of equipment sales to Romania.

1.2 The Privatized Build-Own-Operate Approach

In the event that the Government is either unwilling or unable to provide a sovereign guarantee for the repayment of all debt associated with the project, it may be possible to arrange project financing on a limited recourse basis if the project is to be developed as a private cogeneration project under the auspices of one or more sponsors who will actually build, own, and operate this new cogeneration facility. While the plant will be located at the GRIRO site in northwest Bucharest, it would have a fence around it, so to speak, to ensure that it is a separate corporate entity from GRIRO S.A. However, it would still be desirable to have GRIRO as one of the project sponsors and equity owners of the facility, along with RENEL and possibly RADAT.

An important ingredient to financing Option IIIA as a private cogeneration facility would be RENEL's intent to purchase electricity from the project under a long-term power purchase arrangement at a tariff rate to be negotiated between the sponsors and RENEL prior to financial close for the project. This tariff will be comprised of three components:

(a) A capacity charge sufficient to cover all fixed costs associated with the project plus a fair return to the investors;

(b) An energy charge for all variable costs associated with operation of the plant; and

(c) A fuel charge.

The details of such a tariff, as well as the tariff adjustment mechanism and any bonus or penalties that may be assessed for performance at or below certain levels, will be set forth in a Power Purchase Agreement to be negotiated between the project company and RENEL.

Similarly, a Thermal Energy Purchase Agreement will be negotiated between the project company and RADAT prior to financial close.

In developing Option IIIA as a private cogeneration project on a build-own-operate (BOO) basis, several agreements will be required between the proponents and various government or parastatal entities in Romania as part of the overall Security Package structure designed to address and mitigate project risks. The most frequently required agreements include:

- **Implementation Agreement** -- an agreement between the Government of Romania and the project company establishing the terms and conditions, responsibilities, and privileges of the parties. In addition, this agreement sets forth the fundamental risk sharing framework including guarantees of payment for revenues to be generated under the Power Purchase Agreement.

- **Power Purchase Agreement** -- an agreement that specifies the base tariff rate, method of payment, adjustments to payment, and the conditions under which the power plant should operate.

- **Thermal Energy Purchase Agreement** -- an agreement that specifies the base tariff rate, method of payment, adjustments to payment, and the conditions of providing heat to residential and other customers.

- **Fuel Supply Agreements** -- agreements between the project company and the natural gas and liquid fuel suppliers.

- **Other Documents in the Security Package** -- these agreements typically include a Construction Contract, Land and/or Lease Agreement, Shareholders Agreement, Legal Charter of the Project

Company, Escrow Agreement, and Financing Agreements among others.

Private sector involvement in general, and innovative financing options in particular such as build-own-operate concepts, can provide several major advantages to Romania and GRIRO. These include, but are not limited to, the following benefits:

- A private cogeneration project can facilitate the introduction of more efficient market forces into the electric power and district heating subsectors.

- It has the potential for adding new generating and district heating capacity without any increase in official Romanian debt.

- Neither RENEL, RADAT, nor GRIRO S.A. will have to bear the risk of potential cost overruns, construction delays, or operation risks associated with bringing the facility on-line.

- It will in all probability give both RENEL and RADAT access to new and upgraded electricity and thermal energy generating capacity at an earlier date than if they tried to build such capacity themselves.

- Similarly, O&M costs and administrative costs will be significantly less than those associated with government-owned and operated projects.

- The Government of Romania only has to guarantee payment by either utility if electricity or thermal energy is received or capable of being received by the purchaser.

- It will be consistent with Romania's desire to encourage greater international investment in its economy.

- It will provide potential domestic investors and local partners with an opportunity to receive profits from a sound industrial undertaking in their own country, as well as provide stimulus to future local financial and stock markets.

- Finally, it will free up much needed investment capital for other sectors of the economy.

2.0 Overall Financing Requirements

Total project financing requirements are estimated in Table VIII-1 (Page 54) for Option IIIA, both as a government-sponsored infrastructure project and a private cogeneration project on a build-own-operate basis.

3.0 Preliminary Financing Schemes

For the purposes of this preliminary feasibility analysis, it has been assumed that the GRIRO cogeneration project (Option IIIA) will be financed on the basis of a 70/30 debt to equity ratio (inclusive of interest and financing costs during construction) throughout the repayment period regardless of overall project development approach. K&M feels that for a captive cogeneration project selling thermal energy and electricity over the fence under long-term purchase agreements, a 70/30 ratio represents an appropriate level of gearing given the potentially constant level of revenues over the project's life, as well as the risk profile of the project--especially on a project finance basis as a build-own-operate (BOO) project.

Illustrative approaches to potential sources of debt and equity for financing Option IIIA are highlighted below for both a government-sponsored and privately-financed project on a build-own-operate basis. However, it should be kept in mind that a detailed evaluation based upon a more complete estimate of project costs will be available upon completion of a detailed feasibility report, as well as the identity of the contracting parties, and that these essential updates will enable a more clearly defined financing plan to be developed.

In any event, K&M feels that the sources of debt and equity referred to in each of the project development cases presented below access or represent an appropriate blend of multilateral, bilateral, and commercial providers in amounts which should encourage them to form a positive view of this project, either as a sovereign credit or BOO project risk.

3.1 Full Sovereign Debt Scenario

The potential sources of debt for financing this project utilizing the full faith and credit of the Government of Romania to guarantee repayment of the loan are set out below. Since major export credit lending agencies are not presently active in Romania given the current economic climate and their assessment of attendant risks, the major portion of the debt will, out of necessity, have to be provided by international financial institutions. To date, K&M has found that the European Bank for Reconstruction and

TABLE VIII-1

COMPARISON OF OVERALL FINANCING REQUIREMENTS BETWEEN A GOVERNMENT-SPONSORED AND PRIVATE COGENERATION APPROACH

(In thousands of 1993 U.S. dollars)

MAJOR PROJECT COST COMPONENTS	GOVERNMENT-SPONSORED INFRASTRUCTURE PROJECT	PRIVATE COGENERATION PROJECT BOO BASIS
A. **Major Capital Costs**		
Equipment, Shipping, & Insurance	22,612	22,612
Civil, Mechanical, & Electrical	3,000	3,000
Project A/E Services	1,537	1,537
Liability Insurance	543	543
Contingency	3,389	3,389
Custom Duty	3,278	3,278
Owner Costs (Feasibility Study, Owner Supervision and Start-up, and Operating Costs that can be Capitalized)	3,441	3,441
Subtotal	37,800	37,800
B. **Additional Project Development Costs**		
Formation of Project Company	--	100
Tariff Negotiations for Electricity & Heat Sales	--	150
Power Purchase and Heat Purchase Agreements	--	350
Security Package Negotiation	--	300
Subtotal	--	900
C. **Financing Costs**		
Project Implementation Memorandum	--	150
Commitment Fees with Lenders	150	150
Arrangement Fee	130	130
Equity Placement and Other Financial Advisory Fees	200	1,500
Exposure Fee for Romania	N/A	N/A
Subtotal	480	1,930
D. **Other Capitalized Costs**		
Interest During Construction	4,763	4,763
Subtotal	4,763	4,763
TOTAL PROJECT FINANCING REQUIREMENTS	**43,043**	**45,393***

Note: * Although project costs appear larger for a private cogeneration project, such an approach better assures completion at the original price since cost overruns will be absorbed by the project company.

89

Development has expressed the greatest amount of interest in this particular project. On the other hand, it still may be possible to incorporate the project into a future energy sector loan from the World Bank, but this process will probably take longer than dealing with the EBRD, which is actively seeking good projects in the US$30-40 million range at the present time. However, except for the possibility of expanded participation on the part of multilateral institutions, additional loan commitments on the debt side will be extremely difficult to arrange for a government-sponsored project in Romania today.

3.1.1 Potential Sources of Debt

The potential sources of debt that can be anticipated for a government-sponsored project selling electricity to RENEL under long-term contract and meeting social requirements by providing hot water to 10,000 apartments in district heating zone 1 include the following:

TOTAL DEBT OF 70 PERCENT

Major Sources of Debt	Thousands of 1993 U.S. Dollars	Percent of Debt	Percent of Total Costs
European Bank for Reconstruction & Development (Direct Lending Program)	24,104	80	56
Convertible Debentures through Multilateral Institutions	3,013	10	7
Debt/Debt Swaps and Local Banks (to meet additional local currency requirements)	3,013	10	7
	30,130	100	70

Finally, it should be noted that in the event a portion of the convertible debentures must be treated as equity, then it might be necessary to seek additional sources of public sector debt. Possibilities that need to be explored further include, but are not limited to, grants from either bilateral or multilateral assistance programs or a government loan guarantee.

3.1.2 Potential Sources of Equity

The potential sources of equity and in-kind contributions that can be anticipated for the government-sponsored project option include:

TOTAL EQUITY OF 30 PERCENT*

Major Sources of Equity	Millions of 1993 U.S. Dollars**	Percent of Equity	Percent of Total Costs
GRIRO S.A.	5,165	40	12
RENEL	5,165	40	12
RADAT	2,583	20	6
	12,913	100	30

Note: * Thirty (30) percent equity will be required by the international lenders as a result of current risk assessments and the overall state of the Romanian economy today. In addition, this project will require significant amounts of local currency as a result of the high Romanian content that can be anticipated.

** Local currency requirements in equivalent U.S. dollars.

3.2 Limited Recourse Financing Scenario

A second approach to financing this proposed cogeneration facility is through project financing backed by a combination of owner's equity (on the part of the project sponsors) and the value of long-term Power Purchase and Thermal Energy Purchase Agreements with RENEL and RADAT, respectively. In this case, by arranging to put up 30 percent of the total financing requirements for this project, the project sponsors will have the right to build, own, and operate this cogeneration facility for a specified duration (generally 15-20 years). The balance of project financing will be secured on a limited recourse basis and backed by the value of the long-term Power Purchase and Thermal Energy Sales Agreements, as well as possible secondary guarantees from governmental, bilateral, and multilateral organizations.

91

Previous experience with build-own-operate concepts indicates that the commitment of the host government, coupled with the credibility and track record of the sponsoring group, are the key ingredients of success in a private energy project of this nature. Moreover, the intent is to allocate risks to the various participants in the project according to their ability, suitability, and willingness to bear them. Within such a framework, the intent is to seek to transfer as many of the project risks (especially commercial risks) as possible from the Government of Romania to the project sponsors, contractors, and other private sector participants in an effort to ensure that financing can proceed on a limited recourse basis without direct government guarantees for debt repayment. Typically, the risks associated with such limited recourse projects can be divided into two broad categories of risks: pre-completion and post-completion risks.

With respect to pre-completion risks, the project sponsors agree to enter into a date-certain, cost-certain turnkey contract with appropriate completion guarantees and liquidation damages to support debt service during unanticipated delays. This aspect is crucial since debt service must be paid when due regardless of completion. Additional backstopping can be provided by business interruption insurance and physical force majeure insurance to minimize any residual exposure to GRIRO S.A., RENEL, or RADAT.

After the plant has been constructed and is selling electricity to GRIRO and RENEL as well as thermal energy to GRIRO, RADAT, and interested commercial customers, additional backstopping will be provided by insurance not only for asset loss, but also for business interruption to cover debt service. Moreover, physical force majeure interruption will be covered by insurance to minimize any residual exposure to GRIRO, RENEL, or RADAT. These arrangements will be supported by suitable debt reserve provisions to ensure that an adequate level of comfort is available to sources of finance without the requirement for direct government intervention.

3.2.1 Potential Sources of Debt

The potential sources of debt that can be anticipated for a privatized energy project on a BOO basis selling electricity to GRIRO S.A. and RENEL under a long-term power purchase contract and thermal energy to GRIRO S.A., RADAT, and other interested commercial customers under long-term thermal energy sales agreements include the following:

TOTAL DEBT OF 70 PERCENT

Major Sources of Debt	Thousands of 1993 U.S. Dollars	Percent of Debt	Percent of Total Costs
Multilateral Agencies (such as the European Bank for Reconstruction & Development and possibly the International Finance Corporation)	15,888	50	35
Overseas Private Investment Corporation (Finance Program)	6,355	20	14
Commercial Banks through Co-financing with Multilateral Institutions	6,355	20	14
Debt/Debt Swaps and Local Banks (to meet additional local currency requirements)	3,177	10	7
	31,775	100	70

3.2.2 Potential Sources of Equity

The potential sources of equity and in-kind contributions that can be anticipated for a privatized energy project on a BOO basis include:

TOTAL EQUITY OF 30 PERCENT

Major Sources of Equity	Thousands of 1993 U.S. Dollars	Percent of Equity	Percent of Total Costs
Project Sponsors	2,724	20	6
European Bank for Reconstruction & Development (Merchant Banking)	2,724	20	6
Other Multilateral Equity Participation (possibly by the International Finance Corporation)	2,724	20	6
RENEL	2,724	20	6
RADAT	1,361	10	3
Local Institutional, Corporate, and Individual Investors	1,361	10	3
	13,618	100	30

IX. RECOMMENDED NEXT STEPS

Assuming that GRIRO concurs with the selection of Option IIIA, K&M recommends that the following project-related activities be undertaken.

1.0 Preliminary Actions for GRIRO

It is suggested that GRIRO initiate discussions with both RENEL and RADAT regarding their potential interest in participating in such a project from the standpoint of becoming future customers for the electricity to be generated and hot water and possibly steam to be produced from the proposed cogeneration facility, as well as exploring whether they are interested in becoming one of the project sponsors.

In this regard, K&M feels that at the present time, it may prove extremely difficult to arrange sufficient financing for this project if it proceeds as a government-sponsored infrastructure investment.

Accordingly, K&M recommends that GRIRO, RENEL, and RADAT consider signing a Memorandum of Understanding (MOU) setting forth their intentions to encourage the development of this proposed cogeneration facility on a privatized basis. For its part, GRIRO should be prepared to provide a suitable site located on the grounds of its steel fabrication plant in the northwestern part of Bucharest. Further, GRIRO should be willing to state its intent to promote the establishment of a separate project company on a privatized basis to build, own, generate, and sell electricity to RENEL and thermal energy to RADAT and possibly other commercial customers. However, no commitments should be made in this MOU regarding final management and ownership structure of the project company which will ultimately be formed to develop this privatized project. Similarly, RENEL and RADAT should be prepared to state their intent to purchase specific quantities of electricity and thermal energy from the proposed project.

2.0 Suggested Follow-Up Activities for GRIRO and Ministry of Industry

Moreover, GRIRO and the Romanian Ministry of Industry and Material Resources should be prepared to encourage and support the following additional actions:

- The initiation of a financial risk assessment and institutional framework analysis to be prepared by outside technical consultants in an effort to assess both the current investment climate and potential institutional constraints that may hinder private

investments in power and thermal generation facilities. At a minimum, these reviews should focus on current political structures and trends, overall energy strategy and policies, legal framework for privatization, foreign investment laws including repatriation of profits, foreign ownership of strategic facilities, current bilateral investment treaties, regulatory and licensing framework and current economic outlook. These analyses are deemed necessary since Romania's current investment laws (see Appendix XIII) still do not provide sufficient enough incentives or guarantees to attract foreign private investment in the power sector.

- The commissioning of a fuels availability study with special emphasis on alternatives for improving line pressure in the existing natural gas distribution system, and potential procurement sourcing for distillate fuels suitable for use in combustion turbines.

- The preparation of a detailed feasibility analysis for Option IIIA, including soils analysis, detailed equipment specifications, engineering drawings, and tariff requirements.

- The establishment of a joint-venture project company with interested project sponsors, possibly with the assistance of a U.S. private power developer.

3.0 Proposed Next Steps for USAID

As a direct follow-on to the prefeasibility analysis performed under the current contract, it is proposed that USAID consider undertaking providing technical assistance supporting include the following actions:

- Support the continued development of this promising private energy project opportunity by providing additional technical assistance to GRIRO to conduct a financial risk assessment and institutional framework analysis from a private power investment perspective, as well as perform a fuels availability assessment for this project.

- Provide additional institutional framework/privatization assistance in such areas as private power seminars/workshops, opportunity for GRIRO and RENEL senior management to review firsthand with successful U.S. private power developers the overall framework and strategy for implementing similar private power or cogeneration projects in the United States and elsewhere, and drafting assistance for model Power Purchase and Thermal Energy Sales Agreements.

X. APPENDIX

		Page
Table I	Existing Equipment List	65
Table II	District Heating Temperature	68
Figure I	Typical Week - Winter Energy Production	77
Figure II	Typical Week - Summer Energy Production	78
Figure III	Existing Mechanical Equipment Functional Diagram	79
Figure IV	Electrical System Schematic	80
Figure V	Yearly Thermal and Electrical Energy Production	81
Figure VI	Gas and Oil Yearly Consumption	82
Figure VII	Bucharest Gas Distribution Grid	83
Figure VIII	Heat Balance Diagram, Recommended Option IIIA	84
	• Case IIIA Winter Load (-8°C) Full Firing	85
	• Case IIIA Summer Load (+21°C) Full Firing	87
	• Case IIIA Summer Load (+21°C) Full Firing Steam Injection	89
	• Case IIIA Winter Load (-8°C) Maximum Electrical/Output	91
Table VI-2	Capital Cost Estimate	
	• Option IA - Romanian Supply	93
	• Option IA - International Supply	94
	• Option IB - Romanian Supply	95
	• Option IB - International Supply	96
	• Option II - Romanian Supply	97
	• Option II - International Supply	98
	• Option IIIA - Romanian Supply	99
	• Option IIIA - International Supply	101
	• Option IIIB - Romanian Supply	103
	• Option IIIB - International Supply	104

Page

Table VII-2 Benefit - Cost Analysis

- Option IA - Romanian Supply 106
- Option IA - International Supply 107
- Option IB - Romanian Supply
- Option IB - International Supply 109
- Option IIA - Romanian Supply 110
- Option IIA - International Supply 111
- Option IIIA - Romanian Supply 112
- Option IIIA - International Supply 113
- Option IIIB - Romanian Supply 114
- Option IIIB - International Supply 115

Table VII-3 Annual Power, Heat Production and Fuel Consumption Assumptions 116

Table VII-4 Parameters Used on the Economic Analysis 117

Table VII-5 Additional Benefits and Costs 119

Table VII-7 Rate of Return Estimate

- Option IA - Romanian Supply 120
- Option IA - International Supply 121
- Option IB - Romanian Supply 122
- Option IB - International Supply 123
- Option II - Romanian Supply 124
- Option II - International Supply 125
- Option IIIA - Romanian Supply 126
- Option IIIA - International Supply 127
- Option IIIB - Romanian Supply 128
- Option IIIB - International Supply 129

SKETCHES - Functional Diagram

- Option IA
- Option IB
- Option II
- Option IIIA
- Option IIIB
- General Arrangement Option IIIA

XI. List of United States Manufacturers 130

1.0 Combustion Turbines
2.0 Heat Recovery Steam Generators
3.0 Steam Turbines
4.0 Condensers
5.0 Pumps
6.0 Heat Exchangers

XII. Environmental Impact of Atmospheric Releases of the New Facility

1.0 General 132
2.0 European Community Directives 132
3.0 Atmospheric Releases of the New Facility 135

XIII. Translation of Romanian Foreign Investment Law 137

XIV. Final Comments and Conclusions
1.0 Sequence of Events 141
2.0 GRIRO's Review of Draft Report 141
3.0 Option Selected by GRIRO 141
4.0 Future Actions to Implement GRIRO's Selected Option 141
5.0 Possible Sources of Financing 142

Existing Equipment List

TABLE I			
EXISTING EQUIPMENT LIST[1]			
Equipment Description	**No. of Units**	**Design Data**	**Remarks**
Boilers No. 1 through 6	6	13 MT/H 450°C - 30 bar	4 to be decommissioned 2 under repair Gas and oil burners
Boiler No. 7	1	50 MT/H 450°C - 30 bar	Good condition At this time only gas burners. Will be back fitted to burn also oil
Deaerator	1	Capacity 110 T/hr	Good condition
Turbine No. 1	1	1.6 MWe Extraction and condensing	In poor condition in need of major overhauled
Turbine No. 2	1	6 MWe Back pressure	Good condition
Cooling Towers	1	800 m^3/hr 20 Δt 50 kW fans	Good condition
	2	500 m^3/hr 20 Δt 50 kW fans	One in good condition One under repairs
Circulating Water Pump	1	1,000 m^3/hr 2 bar head	Good condition

F:\1060\outline.JLT

TABLE I			
EXISTING EQUIPMENT LIST[1]			
Equipment Description	**No. of Units**	**Design Data**	**Remarks**
District Heating Water Pumps	1 1 2	1500 m^3/hr 600 m^3/hr 100 m^3/hr	Electric driven Good condition
Boiler Feed Pumps	3	100 m^3/hr 42 bar head	Electric driven Good condition
Condensate Pumps	3	70 m^3/hr 4 bar head	Good condition Electric Driven
Fuel Oil Pumps	2	9.6 T/hr	Poor condition to be replaced
Fire Pumps	2	Electric 200 m^3/hr driven	Good condition
District Heating Heat Exchangers	3	Unknown	To be replaced. Very poor
Water Treatment Plant	1	60 m^3/hr	Good condition
Water Storage Tanks	2 1 1	500 m^3 (underground) 200 m^3 (water tower) 100 m^3 (water tower)	Good condition Good condition Good condition Note: No fire water storage tank exists. During a fire, the fire water pump takes suction from the 500 m^3 underground water storage tank.

[1]Information based on verbal input from GRIRO personnel.

F:\1060\outline.JLT

TABLE I			
EXISTING EQUIPMENT LIST[1]			
Equipment Description	**No. of Units**	**Design Data**	**Remarks**
Fuel Oil Tank (Heavy Oil)	1	1,200 ton	Poor condition
Fuel Oil Tank (Heavy Oil)	1	1,000 ton	Under construction
Fuel Oil Tank (Heavy Oil)	1	700 ton	Under construction
			Note: No light fuel oil storage tank exists.
Turbine Floor Cranes	1	7 ton	Good condition
	1	5 ton	Good condition

[1]Information based on verbal input from GRIRO personnel.

F:\1060\outline.JLT

TABLE II DISTRICT HEATING TEMPERATURE				
Ambient Temperature, °C	Supply Temperature, °C	Return Temperature, °C	Delta Temperature, °C	Flow m^3/H
7	70	45	25	248
6.9	70	45	25	251
6.8	71	45	26	253
6.7	71	45	26	256
6.6	71	45	26	258
6.5	72	46	26	261
6.4	72	46	27	263
6.3	73	46	27	265
6.2	73	46	27	268
6.1	73	46	27	270
6.0	74	46	28	273
5.9	74	46	28	275
5.8	74	46	28	278
5.7	75	46	28	280
5.6	75	47	29	283
5.5	75	47	29	285
5.4	76	47	29	288
5.3	76	47	29	290
5.2	77	47	30	293
5.1	77	47	30	295
5.0	77	47	30	298
4.9	78	47	30	300
4.8	78	47	31	303
4.7	78	48	31	305
4.6	79	48	31	308
4.5	79	48	31	310
4.4	79	48	32	313

F:\1060\outline.JLT

103

TABLE II DISTRICT HEATING TEMPERATURE				
Ambient Temperature, °C	Supply Temperature, °C	Return Temperature, °C	Delta Temperature, °C	Flow m^3/H
4.3	80	48	32	315
4.8	78	48	30	310
4.1	81	48	32	320
4.0	81	48	33	323
3.9	81	?	33	325
3.8	82	49	33	328
3.7	82	49	33	330
3.6	82	49	34	333
3.5	83	49	34	335
3.4	83	49	34	338
3.3	83	49	34	340
3.2	84	49	35	343
3.1	84	49	35	345
3.0	85	50	35	348
2.9	85	50	35	350
2.8	85	50	36	352
2.7	86	50	36	355
2.6	86	50	36	357
2.5	86	50	36	360
2.4	87	50	37	362
2.3	87	50	37	365
2.2	87	50	37	367
2.1	88	51	37	370
2.0	88	51	38	372
1.9	89	51	38	375
1.8	89	51	38	377
1.7	89	51	38	380

F:\1060\outline.JLT

104

TABLE II DISTRICT HEATING TEMPERATURE				
Ambient Temperature, °C	Supply Temperature, °C	Return Temperature, °C	Delta Temperature, °C	Flow m^3/H
1.6	90	51	39	382
1.5	90	51	39	385
1.4	90	51	39	387
1.3	91	51	39	390
1.2	91	52	40	392
1.1	91	52	40	395
1.0	92	52	40	397
0.9	92	52	40	400
0.8	93	52	41	402
0.7	93	52	41	405
0.6	93	52	41	407
0.4	94	52	42	412
0.3	94	53	42	415
0.2	95	53	42	417
0.1	95	53	42	420
0.0	95	53	43	422
-0.1	96	53	43	425
-0.2	96	53	43	427
-0.3	96	53	43	430
-0.4	97	53	44	432
-0.5	97	53	44	435
-0.6	98	54	44	437
-0.7	98	54	44	439
-0.8	98	54	45	442
-0.9	99	54	45	444
-1.0	99	54	45	447
-1.1	99	54	45	449

TABLE II DISTRICT HEATING TEMPERATURE				
Ambient Temperature, °C	Supply Temperature, °C	Return Temperature, °C	Delta Temperature, °C	Flow m^3/H
-1.2	100	54	46	452
-1.3	100	54	46	454
-1.4	100	54	46	457
-1.5	101	55	46	459
-1.6	101	55	47	462
-1.7	102	55	47	464
-1.8	102	55	47	467
-1.9	102	55	47	469
-2.0	103	55	48	472
-2.1	103	55	48	474
-2.2	103	55	48	477
-2.3	104	56	48	479
-2.4	104	56	49	482
-2.5	104	56	49	484
-2.6	105	56	49	487
-2.7	105	56	49	489
-2.8	106	56	50	492
-2.9	106	56	50	494
-3.0	106	56	50	497
?	?	?	?	?
-3.2	107	57	51	502
-3.3	107	57	51	504
-3.4	100	57	51	507
-3.5	108	57	51	509
-3.6	108	57	52	512
-3.7	109	57	52	514
-3.8	109	57	52	517

F:\1060\outline.JLT

TABLE II DISTRICT HEATING TEMPERATURE				
Ambient Temperature, °C	Supply Temperature, °C	Return Temperature, °C	Delta Temperature, °C	Flow m^3/H
-3.9	110	57	52	519
-4.0	110	57	53	522
-4.1	110	58	53	524
-4.2	111	58	53	526
-4.3	111	58	53	529
-4.4	111	58	54	531
-4.5	112	58	54	534
-4.6	112	58	54	536
-4.7	112	58	54	539
-4.8	113	58	55	541
-4.9	113	58	55	544
-5.0	114	59	55	546
-5.1	114	59	55	549
-5.2	114	59	56	551
-5.3	115	59	56	554
-5.4	115	59	56	556
-5.5	115	59	56	559
-5.6	116	59	57	561
-5.7	116	59	57	564
-5.8	116	59	57	566
-5.9	117	60	57	569
-6.0	117	60	58	571
-6.1	118	60	58	574
-6.2	118	60	58	576
-6.3	118	60	58	579
-6.4	119	60	59	581
-6.5	119	60	59	584

F:\1060\outline.JLT

107

TABLE II DISTRICT HEATING TEMPERATURE				
Ambient Temperature, °C	Supply Temperature, °C	Return Temperature, °C	Delta Temperature, °C	Flow m^3/H
-6.6	119	60	57	586
-6.8	120	61	60	591
-6.9	120	61	60	594
-7.0	121	61	60	596
-7.1	121	61	60	599
-7.2	122	61	61	601
-7.3	122	61	61	604
-7.4	122	61	61	606
-7.5	123	61	61	609
-7.6	123	61	62	611
-7.7	123	62	62	613
-7.8	124	62	62	616
-7.9	124	62	62	618
-8.0	124	62	63	621
-8.1	125	62	63	623
-8.2	125	62	63	626
-8.3	126	62	63	628
-8.4	126	62	64	631
-8.5	126	63	64	633
-8.6	127	63	64	636
-8.7	127	63	64	638
-8.8	127	63	65	641
-8.9	128	63	65	643
-9.0	128	63	65	646
-9.1	128	63	65	648
-9.2	129	63	66	651
-9.3	129	63	66	653

F:\1060\outline.JLT

\68

TABLE II DISTRICT HEATING TEMPERATURE				
Ambient Temperature, °C	Supply Temperature, °C	Return Temperature, °C	Delta Temperature, °C	Flow m^3/H
-9.4	130	64	66	656
-9.5	130	64	66	658
-9.6	130	64	67	661
-9.7	131	64	67	663
-9.8	131	64	67	666
-9.9	131	64	67	668
-10.0	132	64	68	671
-10.1	132	64	68	673
-10.2	132	64	68	676
-10.4	133	65	69	681
-10.5	134	65	69	683
-10.6	134	65	69	686
-10.7	134	65	69	688
-10.8	135	65	70	691
-10.9	135	65	70	693
-11.0	135	65	70	696
-11.1	136	65	70	698
-11.2	136	66	71	700
-11.3	136	66	71	703
-11.4	137	66	71	705
-11.5	137	66	71	708
-11.6	138	66	72	710
-11.7	138	66	72	713
-11.8	138	66	72	715
-11.9	139	66	72	718
-12.0	139	66	73	720
-12.1	139	67	73	723

F:\1060\outline.JLT

TABLE II DISTRICT HEATING TEMPERATURE				
Ambient Temperature, °C	Supply Temperature, °C	Return Temperature, °C	Delta Temperature, °C	Flow m^3/H
-12.2	140	67	73	725
-12.3	140	67	73	728
-12.4	140	67	74	730
-12.5	141	67	74	733
-12.6	141	67	74	735
-12.7	142	67	74	738
-12.8	142	67	75	740
-12.9	142	67	75	743
-13.0	143	68	75	745
-13.1	143	68	75	748
-13.2	143	68	76	750
-13.3	144	68	76	753
-13.4	144	68	76	755
-13.5	144	68	76	758
-13.6	145	68	77	760
-13.7	145	68	77	763
-13.8	146	69	77	765
-14.0	146	69	78	770
-14.1	147	69	78	773
-14.2	147	69	78	775
-14.3	147	69	78	778
-14.4	148	69	79	780
-14.5	148	69	79	783
-14.6	148	69	79	785
-14.7	149	70	79	787
-14.8	149	70	80	790
-14.9	149	70	80	792

TABLE II DISTRICT HEATING TEMPERATURE				
Ambient Temperature, °C	Supply Temperature, °C	Return Temperature, °C	Delta Temperature, °C	Flow m^3/H
-15.0	150	70	80	795
-15.1	150	70	80	797
-15.2	151	70	81	800
-15.3	151	70	81	802
-15.4	151	70	81	805
-15.5	152	70	81	807
-15.6	152	71	82	810
-15.7	152	71	82	812
-15.8	153	71	82	815
-15.9	153	71	82	817
-16.0	153	71	83	820
-16.1	154	71	83	822

Design Heat Exchangers for 1150 m^3/H (3) or 350 m^3/H each.

111

FIGURE I - Typical Week-Winter Energy Production

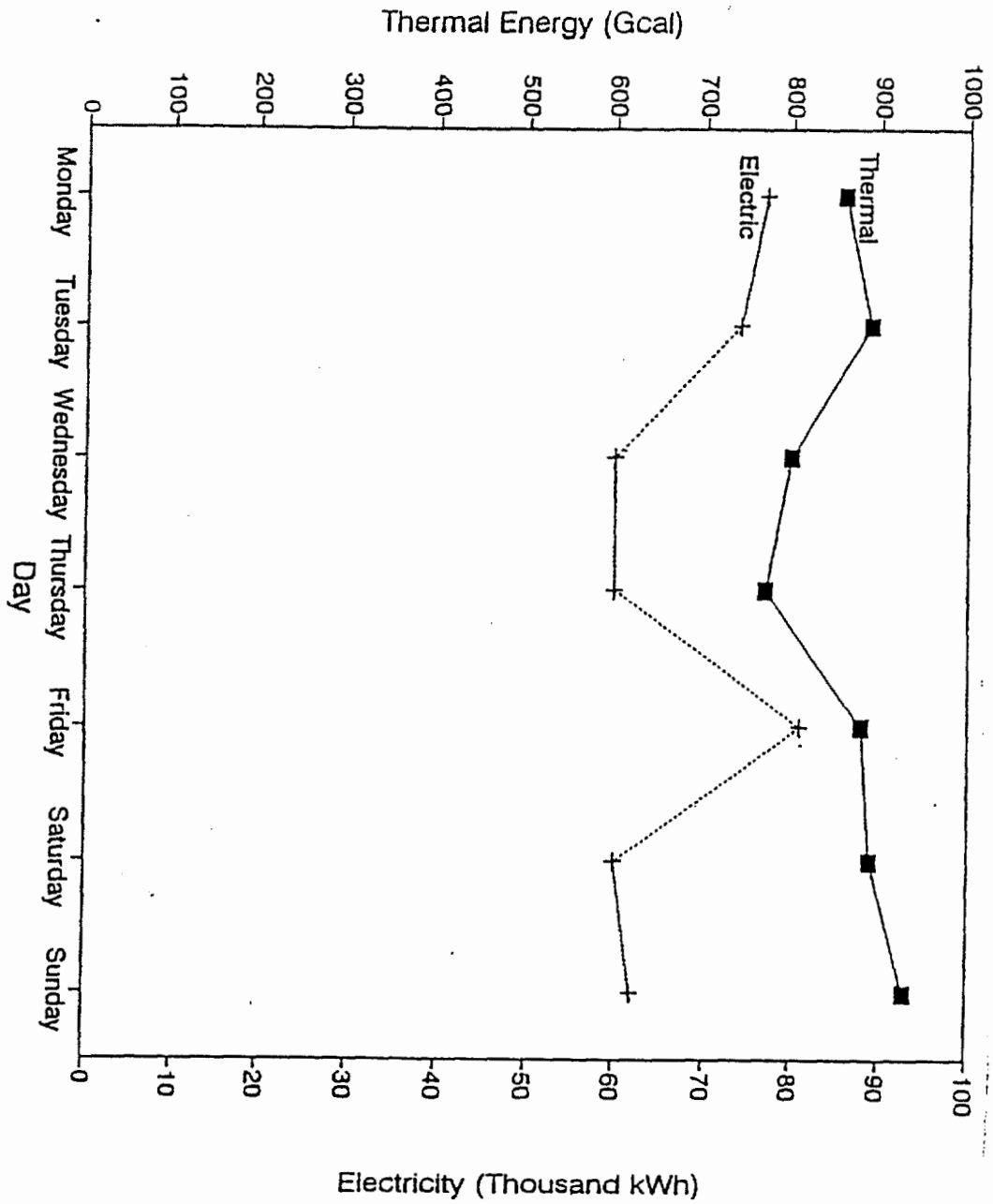

From Resource Management Association of Madison Report

F:\1060\outline.JLT

112

FIGURE II - Typical Week-Summer 7/16-22
Energy Production

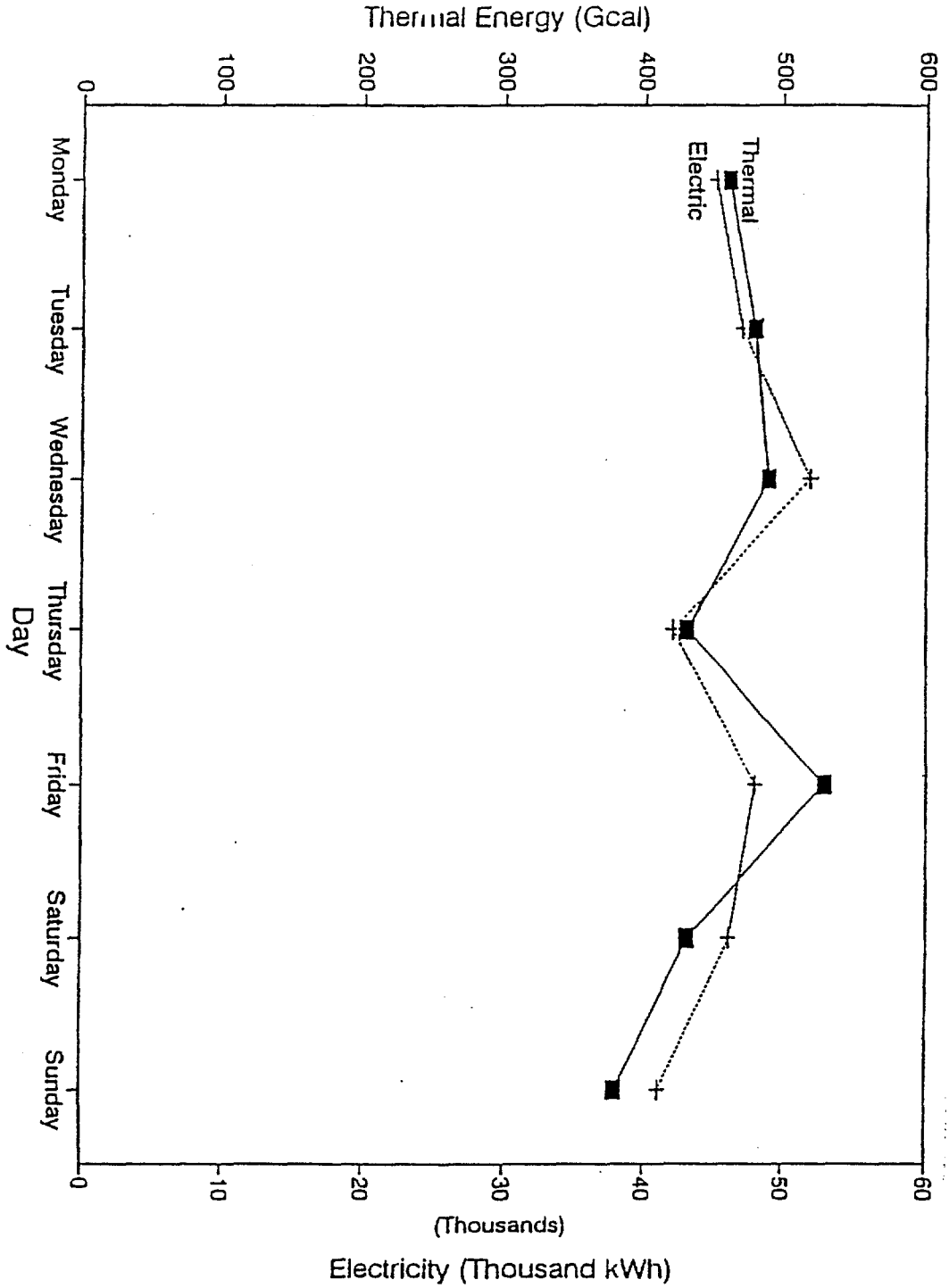

From Resource Management Association of Madison Report

F:\1060\outline.JLT

113

FIGURE III - Existing Facility

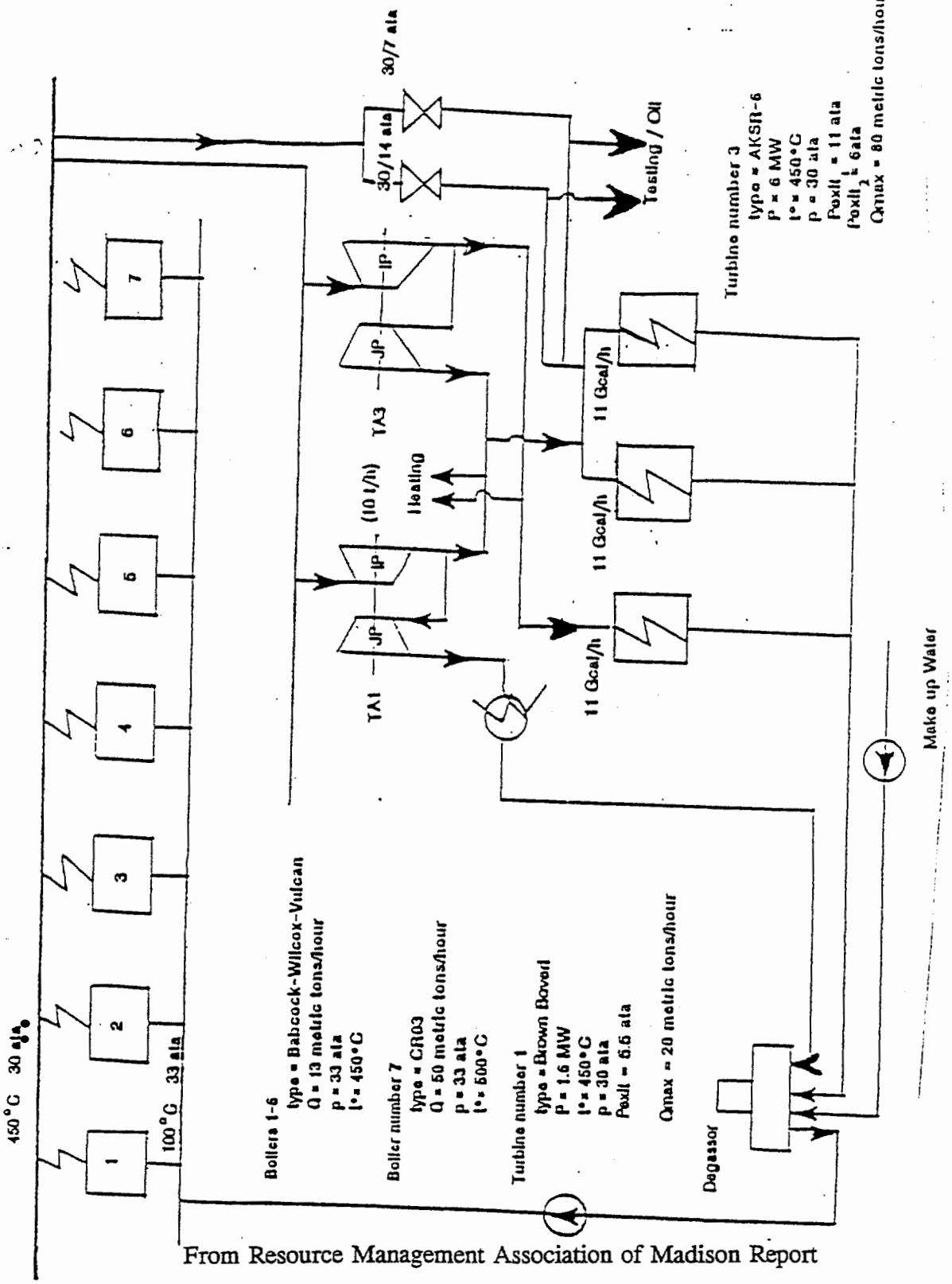

From Resource Management Association of Madison Report

FIGURE III - Existing Facility

F:\1060\outline.JLT

FIGURE IV - Electrical System Schematic

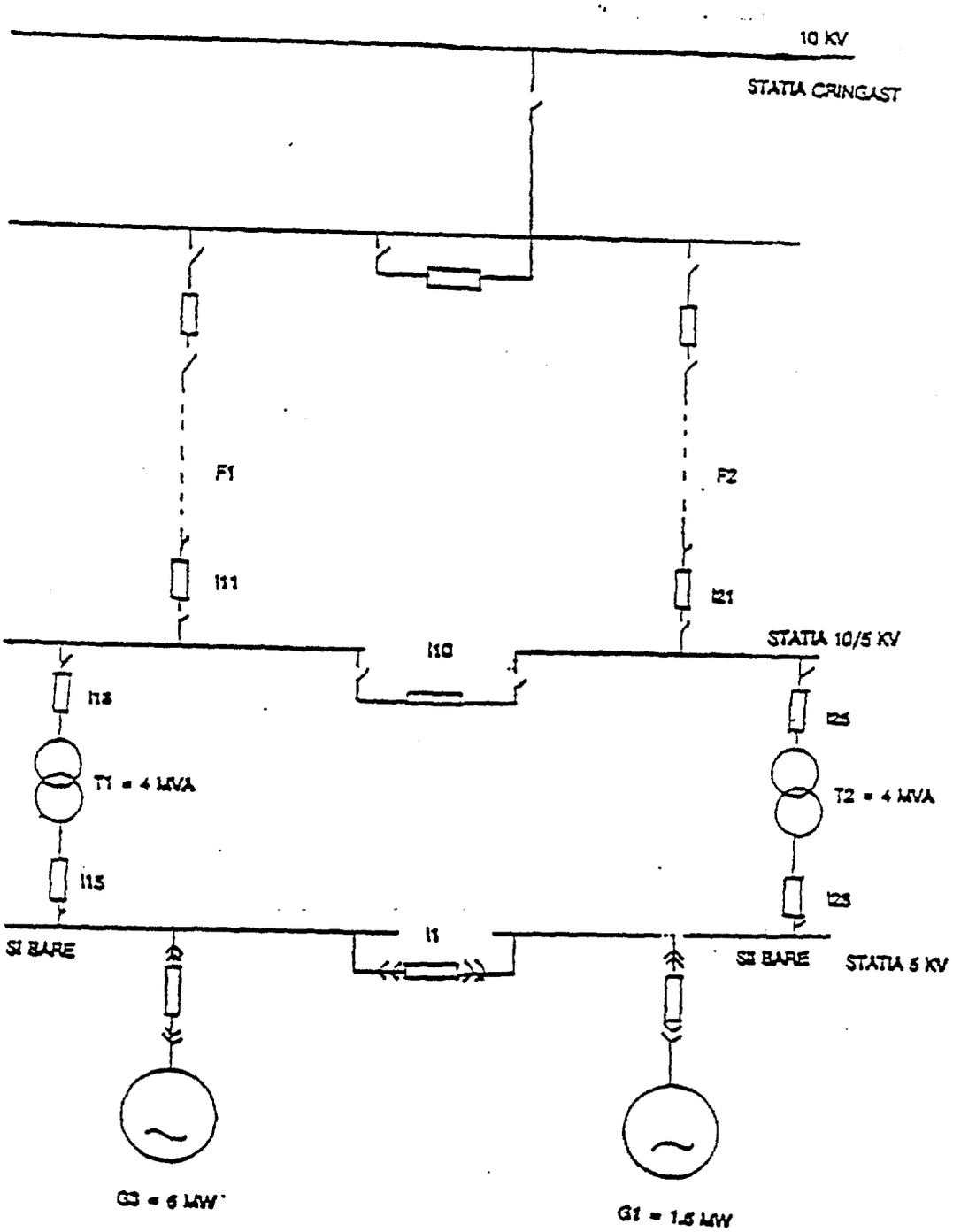

From Resource Management Association of Madison Report

FIGURE V

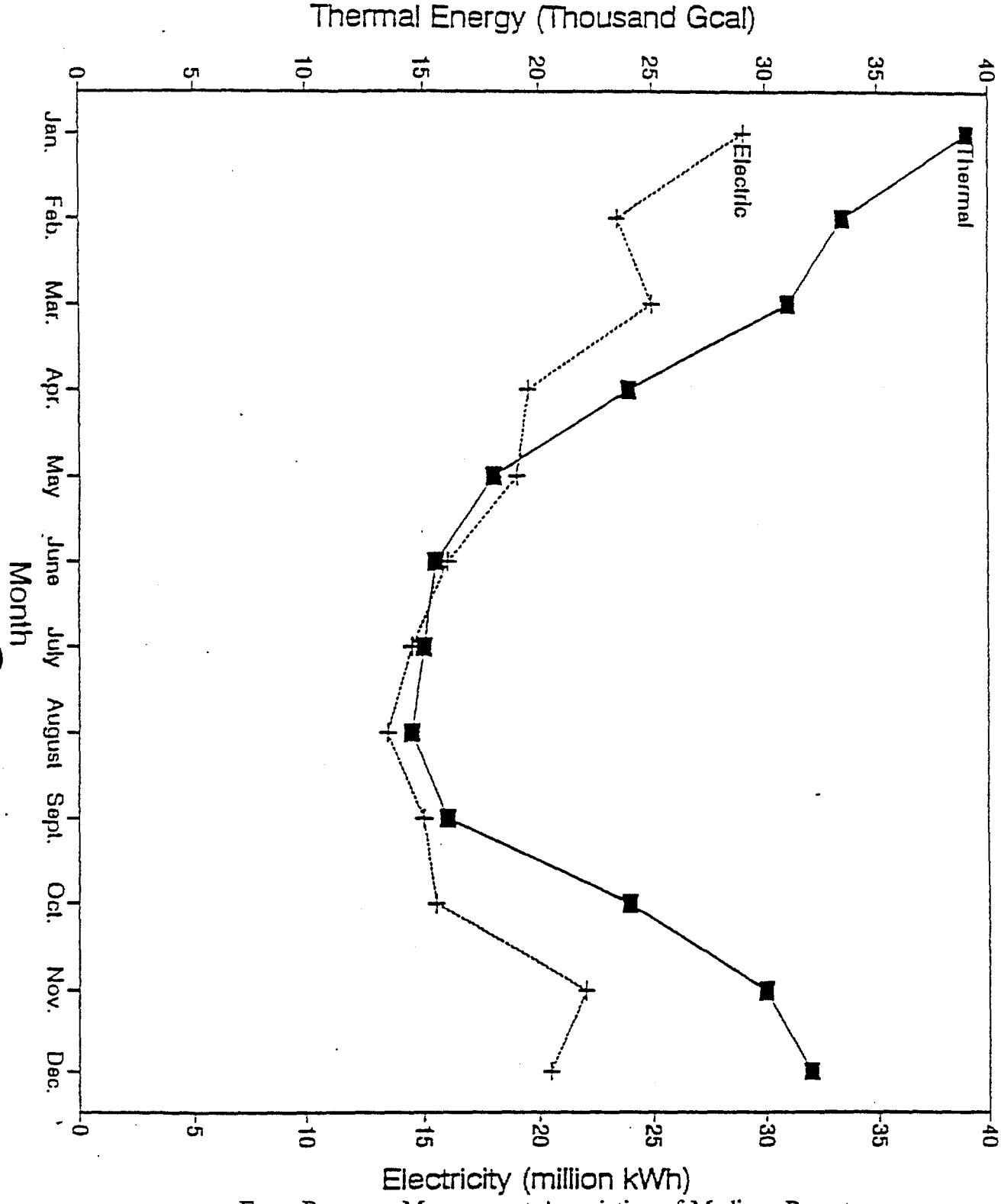

From Resource Management Association of Madison Report

FIGURE VI - Energy Consumption in 1990

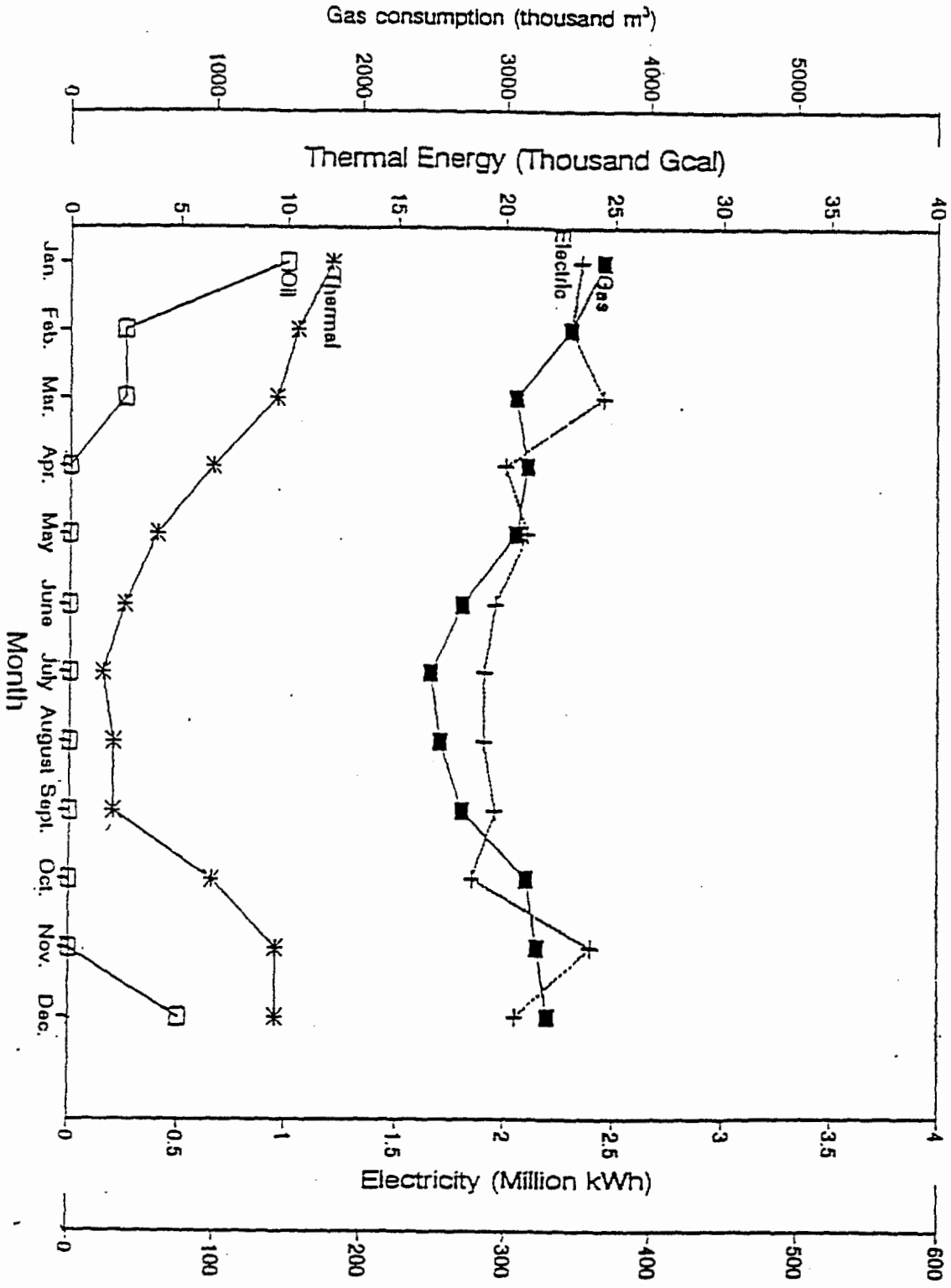

From Resource Managem. Madison Report

117

FIGURE VII

BUCHAREST GAS DISTRIBUTION

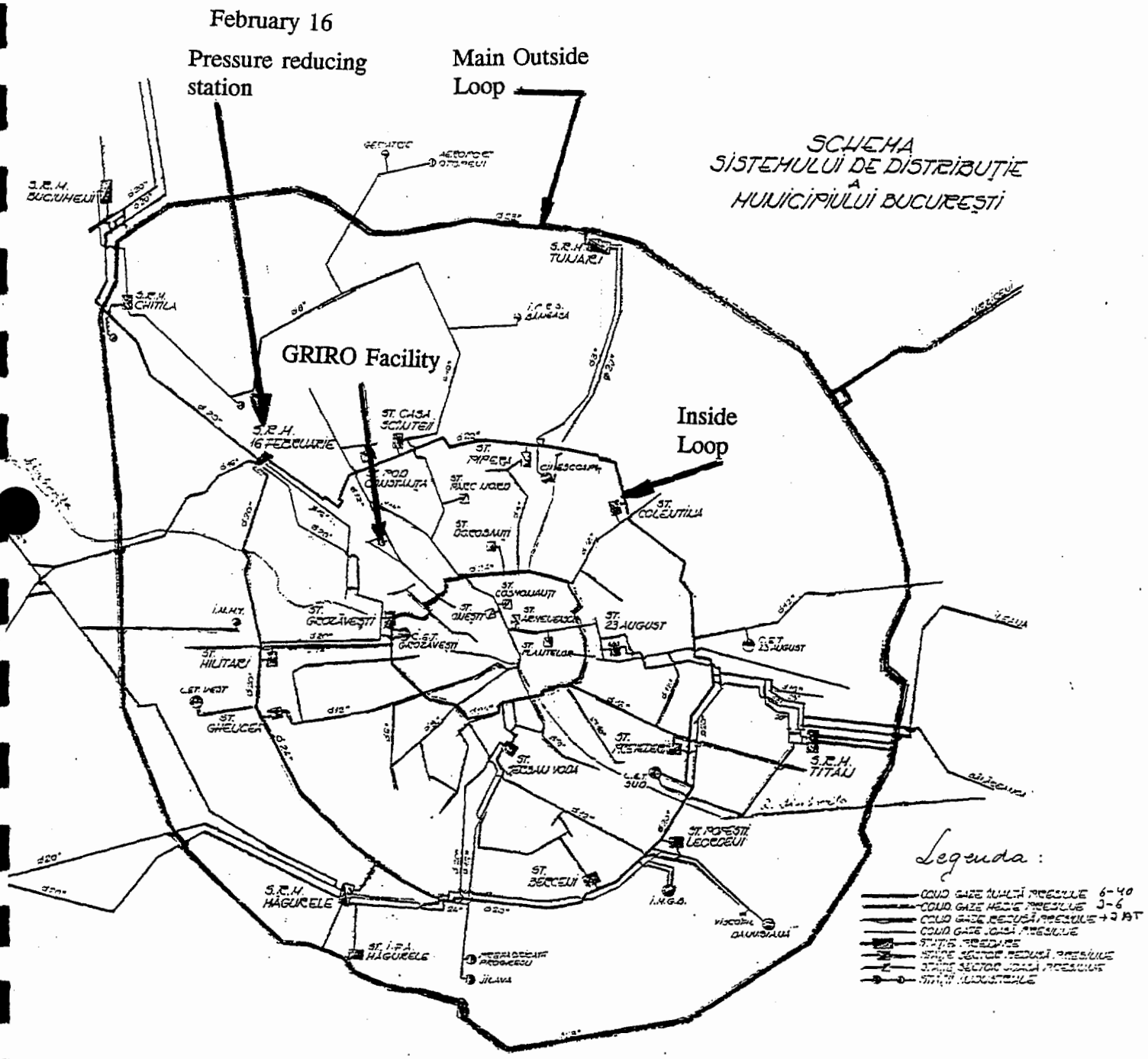

118

FIGURE VIII

Heat Balance Sheet

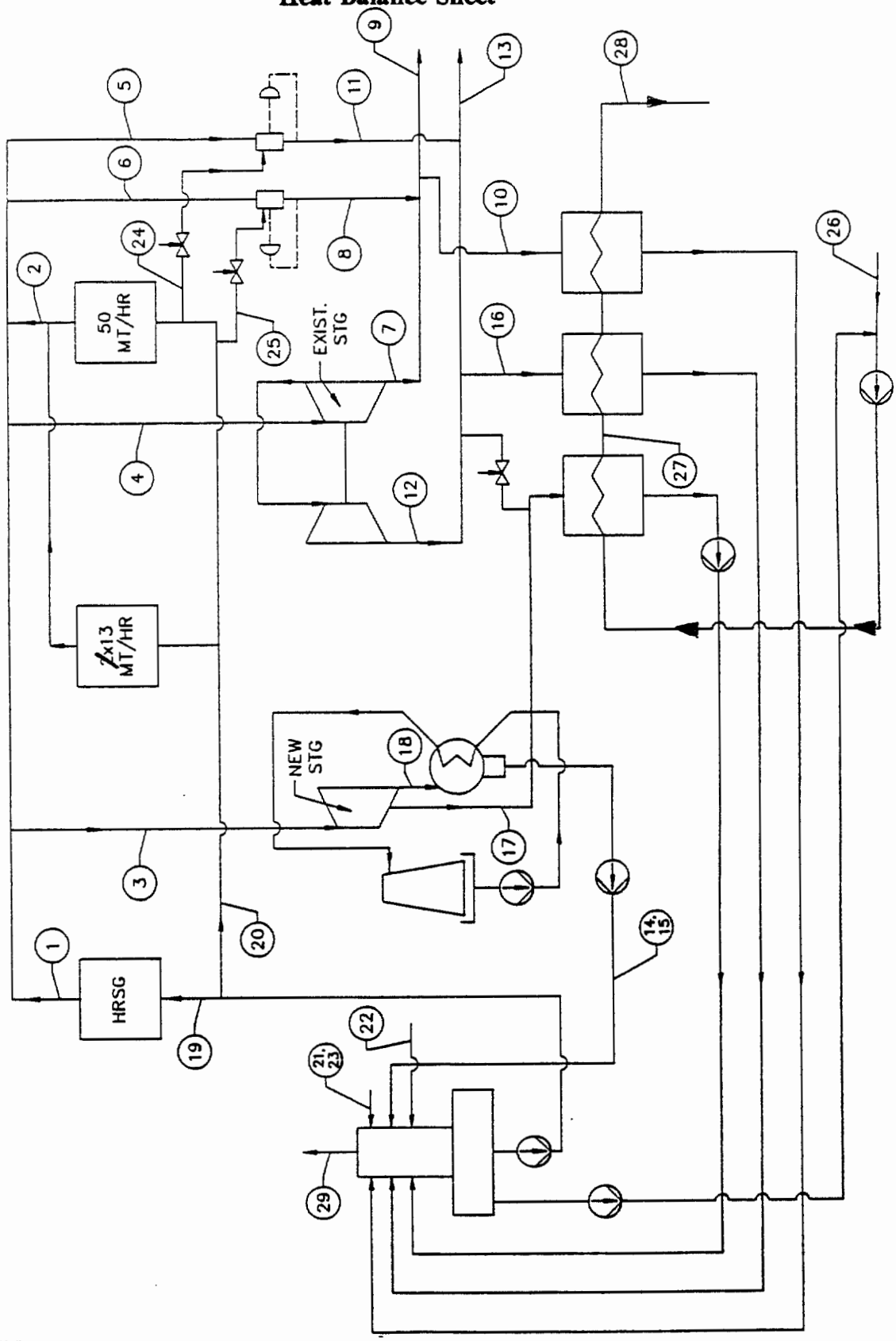

F:\1060\outline.JLT

Case III A
Winter Load (-8 °C). Full Firing

Heat Output from HRSG, Gcal/Hr	69.5
Heat Input with Firing, Gcal/Hr	33.8
Heat Output from Exist 30 Bara Blrs, Gcal/Hr	16.4
Heat with HP Steam Export, Gcal/Hr	11.3
Heat with LP Steam Export, Gcal/Hr	10.8
Heat Output for District Heating, Gcal/Hr	23.1
Heat Output from Peak HTRS, Gcal/Hr	15.4
Total Thermal Output	60.7
Existing Steam Turbine Electrical Output, MWe	5.8
New Steam Turbine Electrical Output, MWe	10.1
GTG Electrical Output, MWe	33.1
Total Plant Electrical Output, MWe	49.0
District Heating	
Heat Output from New LP DW Heaters, Gcal/Hr	23.1
Heat Output from LP Peak HTRS, Gcal/Hr	15.4
Total Heat Output for Distr. Heating, MWth	38.5
Fuel Consumption	
Natural Gas Demand for Firing, N CU M/Hr	4785.7
Fuel Oil Demand for Firing, MT/Hr	4.4
Natural Gas Demand for Full Load Firing, N CU M/Hr	4785.7
Fuel Oil Demand for Full Load Firing, MT/Hr	4.4

Case III A
Winter Load (-8 °C). Full Firing

Point #q	Flow MT/Hr	Temp. °C	Press ATA	Enth Gcal/Hr	
1	100.0	450	30	798.1	Steam from HRSG
2	23.7	450	30	798.1	STM from Exist 30 Bara Blrs
3	52.5	450	30	798.1	STM to the New STG
4	71.2	450	30	798.1	Steam to Existing Turbine
5	0.0	450	30	798.1	30 ATA STM to PRS 30/7
6	0.0	450	30	798.1	30 ATA STM to PRS 30/13
7	15.0	354	13	753.9	13 ATA STM From Exist STG
8	0.0	354	13	753.9	13 ATA STM from PRS 30/13
9	15.0	354	13	753.9	13 ATA STM Export
10	0.0	354	13	753.9	13 ATA STM to Hot Water HTRS
11	0.0	283	7	721.4	7 ATA STM from PRS 30/7
12	56.2	283	7	721.4	7 ATA STM from Exist STG
13	15.0	283	7	721.4	7 ATA STM Export
14	4.9	283	7	721.4	7 ATA STM for FW Deaeration
15	8.5	283	7	721.4	7 ATA STM for HW Deaeration
16	27.7	283	7	721.4	7 ATA STM to HW HTRS
17	42.5	107.1	1.3	649.5	STM from New STG to DWH1
18	10.0	36.2	0.06	564.2	STM from New STG to Condens
19	101.0	104.8	40.0	104.9	Feed Water Flow to HRSG
20	23.9	104.8	40.0	104.9	FW to Exist 30 ATA BLR
21	40.1	7.0	8.0	7.3	Demin Water Flow to FW Deaer
22	0.0	85.0	8.0	85.0	Cond. Return
23	51.6	7.0	8.0	7.3	Demin Water to HW Deaer
24	0.0	104.8	40.0	104.9	FW to PRS 30/13
25	0.0	104.8	40.0	104.9	FW to PRS 30/7
26	560.9	62.0	3.5	62.0	Water from District Heating
27	621.0	99.1	7.5	99.1	Water Downstream DWH1
28	621.0	124.0	7.5	124.0	Water to District Heating
29	0.4	104.8	4.5	640.4	Deaer Vent

Case III A
Summer Load. Full Firing

Heat Output from HRSG, Gcal/Hr	69.5
Heat Input with Firing, Gcal/Hr	33.8
Heat Output from Exist 30 Bara Blrs, Gcal/Hr	12.8
Heat with HP Steam Export, Gcal/Hr	11.3
Heat with LP Steam Export, Gcal/Hr	10.8
Heat Output for District Heating, Gcal/Hr	9.5
Heat Output from Peak HTRS, Gcal/Hr	0.0
Total Thermal Output	31.7
Existing Steam Turbine Electrical Output, MWe	4.0
New Steam Turbine Electrical Output, MWe	17.3
GTG Electrical Output, MWe	33.1
Total Plant Electrical Output, MWe	54.4
District Heating	
Heat Output from New LP DW Heaters, Gcal/Hr	9.5
Heat Output from LP Peak HTRS, Gcal/Hr	0.0
Total Heat Output for Distr. Heating, MWth	9.5
Fuel Consumption	
Natural Gas Demand for Firing, N CU M/Hr	4785.7
Fuel Oil Demand for Firing, MT/Hr	4.4
Natural Gas Demand for Full Load Firing, N CU M/Hr	4785.7
Fuel Oil Demand for Full Load Firing, MT/Hr	4.4

Case III A
Summer Load. Full Firing

Point #	Flow MT/Hr	Temp. °C	Press ATA	Enth Kcal/Hr	
1	100.0	450	30	798.1	Steam from HRSG
2	18.5	450	30	798.1	STM from Exist 30 Bara Blrs
3	67.8	450	30	798.1	STM to the New STG
4	50.6	450	30	798.1	Steam to Existing Turbine
5	0.0	450	30	798.1	30 ATA STM to PRS 30/7
6	0.0	450	30	798.1	30 ATA STM to PRS 30/13
7	15.0	354	13	753.9	13 ATA STM From Exist STG
8	0.0	354	13	753.9	13 ATA STM from PRS 30/13
9	15.0	354	13	753.9	13 ATA STM Export
10	0.0	354	13	753.9	13 ATA STM to Hot Water HTRS
11	0.0	283	7	721.4	7 ATA STM from PRS 30/7
12	35.6	283	7	721.4	7 ATA STM from Exist STG
13	15.0	283	7	721.4	7 ATA STM Export
14	12.1	283	7	721.4	7 ATA STM for FW Deaeration
15	8.5	283	7	721.4	7 ATA STM for HW Deaeration
16	0.0	283	7	721.4	7 ATA STM to HW HTRS
17	18.6	78.0	0.4	617.7	STM from New STG to DWH1
18	49.2	36.2	0.06	564.2	STM from New STG to Condens
19	101.0	104.8	40.0	104.9	Feed Water Flow to HRSG
20	18.7	104.8	40.0	104.9	FW to Exist 30 ATA BLR
21	40.1	7.0	8.0	7.3	Demin Water Flow to FW Deaer
22	0.0	85.0	8.0	85.0	Cond. Return
23	51.6	7.0	8.0	7.3	Demin Water to HW Deaer
24	0.0	104.8	40.0	104.9	FW to PRS 30/13
25	0.0	104.8	40.0	104.9	FW to PRS 30/7
26	319.9	45.0	3.5	45.0	Water from District Heating
27	380.0	70.0	7.5	70.0	Water Downstream DWH1
28	380.0	70.0	7.5	70.0	Water to District Heating
29	0.4	104.8	1.2	640.4	Deaer Vent

Case III A

Summer Load. Full Firing. Steam Injection

Heat Output from HRSG, Gcal/Hr	69.5
Heat Input with Firing, Gcal/Hr	33.8
Heat Output from Exist 30 Bara Blrs, Gcal/Hr	41.0
Heat with HP Steam Export, Gcal/Hr	11.3
Heat with LP Steam Export, Gcal/Hr	10.8
Heat Output for District Heating, Gcal/Hr	9.5
Heat Output from Peak HTRS, Gcal/Hr	0.0
Total Thermal Output	31.7
Existing Steam Turbine Electrical Output, MWe	4.6
New Steam Turbine Electrical Output, MWe	6.6
GTG Electrical Output, MWe	51.9
Total Plant Electrical Output, MWe	63.1
District Heating	
Heat Output from New LP DW Heaters, Gcal/Hr	9.5
Heat Output from LP Peak HTRS, Gcal/Hr	0.0
Total Heat Output for Distr. Heating, MWth	9.5
Fuel Consumption	
Natural Gas Demand for Firing, N CU M/Hr	4785.7
Fuel Oil Demand for Firing, MT/Hr	4.4
Natural Gas Demand for Full Load Firing, N CU M/Hr	4785.7
Fuel Oil Demand for Full Load Firing, MT/Hr	4.4

Case III A

Summer Load. Full Firing. Steam Injection

Point #	Flow MT/Hr	Temp. °C	Press ATA	Enth Kcal/Hr	
1	100.0	450	30	798.1	Steam from HRSG
2	59.1	450	30	798.1	STM from Exist 30 Bara Blrs
3	28.6	450	30	798.1	STM to the New STG
4	57.8	450	30	798.1	Steam to Existing Turbine
5	0.0	450	30	798.1	30 ATA STM to PRS 30/7
6	0.0	450	30	798.1	30 ATA STM to PRS 30/13
7	15.0	354	13	753.9	13 ATA STM From Exist STG
8	0.0	354	13	753.9	13 ATA STM from PRS 30/13
9	15.0	354	13	753.9	13 ATA STM Export
10	0.0	354	13	753.9	13 ATA STM to Hot Water HTRS
11	0.0	283	7	721.4	7 ATA STM from PRS 30/7
12	42.8	283	7	721.4	7 ATA STM from Exist STG
13	15.0	283	7	721.4	7 ATA STM Export
14	19.3	283	7	721.4	7 ATA STM for FW Deaeration
15	8.5	283	7	721.4	7 ATA STM for HW Deaeration
16	0.0	283	7	721.4	7 ATA STM to HW HTRS
17	18.6	78.0	0.4	617.7	STM from New STG to DWH1
18	10.0	36.2	0.06	564.2	STM from New STG to Condens
19	101.0	104.8	40.0	104.9	Feed Water Flow to HRSG
20	59.7	104.8	40.0	104.9	FW to Exist 30 ATA BLR
21	113.1	7.0	8.0	7.3	Demin Water Flow to FW Deaer
22	0.0	85.0	8.0	85.0	Cond. Return
23	51.6	7.0	8.0	7.3	Demin Water to HW Deaer
24	0.0	104.8	40.0	104.9	FW to PRS 30/13
25	0.0	104.8	40.0	104.9	FW to PRS 30/7
26	319.9	45.0	3.5	45.0	Water from District Heating
27	380.0	70.0	7.5	70.0	Water Downstream DWH1
28	380.0	70.0	7.5	70.0	Water to District Heating
29	0.4	104.8	1.2	640.4	Deaer Vent
30	72.6	450	30	798.1	Steam Injection to GTG

Note: Injected steam pressure

Case III A
Summer Load. Full Firing. Maximum Electrical Output
(CTG and all boilers in operation)

Heat Output from HRSG, Gcal/Hr	69.5
Heat Input with Firing, Gcal/Hr	33.8
Heat Output from Exist 30 Bara Blrs, Gcal/Hr	12.8
Heat with HP Steam Export, Gcal/Hr	11.3
Heat with LP Steam Export, Gcal/Hr	10.8
Heat Output for District Heating, Gcal/Hr	9.5
Heat Output from Peak HTRS, Gcal/Hr	0.0
Total Thermal Output	31.7
Existing Steam Turbine Electrical Output, MWe	4.0
New Steam Turbine Electrical Output, MWe	17.3
GTG Electrical Output, MWe	50.4
Total Plant Electrical Output, MWe	71.7
District Heating	
Heat Output from New LP DW Heaters, Gcal/Hr	9.5
Heat Output from LP Peak HTRS, Gcal/Hr	0.0
Total Heat Output for Distr. Heating, MWth, Gcal/Hr	9.5
Fuel Consumption	
Natural Gas Demand for Firing, N CU M/Hr	4785.7
Fuel Oil Demand for Firing, MT/Hr	4.4
Natural Gas Demand for Full Load Firing, N CU M/Hr	4785.7
Fuel Oil Demand for Full Load Firing, MT/Hr	4.4
Natural Gas Demand for Exist Boilers, N CU M/Hr	1814.3
Fuel Oil Demand for Exist Boilers, MT/Hr	1.7

Case III A
Summer Load. Full Firing. Maximum Electrical Output
(CTG and all boilers in operation)

Point #	Flow MT/Hr	Temp. °C	Press ATA	Enth Kcal/Hr	
1	100.0	450	30	798.1	Steam from HRSG
2	18.5	450	30	798.1	STM from Exist 30 Bara Blrs
3	67.8	450	30	798.1	STM to the New STG
4	50.6	450	30	798.1	Steam to Existing Turbine
5	0.0	450	30	798.1	30 ATA STM to PRS 30/7
6	0.0	450	30	798.1	30 ATA STM to PRS 30/13
7	15.0	354	13	753.9	13 ATA STM From Exist STG
8	0.0	354	13	753.9	13 ATA STM from PRS 30/13
9	15.0	354	13	753.9	13 ATA STM Export
10	0.0	354	13	753.9	13 ATA STM to Hot Water HTRS
11	0.0	283	7	721.4	7 ATA STM from PRS 30/7
12	35.6	283	7	721.4	7 ATA STM from Exist STG
13	15.0	283	7	721.4	7 ATA STM Export
14	12.1	283	7	721.4	7 ATA STM for FW Deaeration
15	8.5	283	7	721.4	7 ATA STM for HW Deaeration
16	0.0	283	7	721.4	7 ATA STM to HW HTRS
17	18.6	78.0	0.4	617.7	STM from New STG to DWH1
18	49.2	36.2	0.06	564.2	STM from New STG to Condens
19	101.0	104.8	40.0	104.9	Feed Water Flow to HRSG
20	18.7	104.8	40.0	104.9	FW to Exist 30 ATA BLR
21	40.1	7.0	8.0	7.3	Demin Water Flow to FW Deaer
22	0.0	85.0	8.0	85.0	Cond.. Return
23	51.6	7.0	8.0	7.3	Demin Water to HW Deaer
24	0.0	104.8	40.0	104.9	FW to PRS 30/13
25	0.0	104.8	40.0	104.9	FW to PRS 30/7
26	319.9	45.0	3.5	45.0	Water from District Heating
27	380.0	70.0	7.5	70.0	Water Downstream DWH1
28	380.0	70.0	7.5	70.0	Water to District Heating
29	0.4	104.8	1.2	640.4	Deaer Vent

Table VI-2

GRIRO, ROMANIA - OPTION IA - CAPITAL COST ESTIMATE (1000 $ 1993)
MAXIMIZE ROMANIAN SUPPLY

WORK ITEM	1000 MHS	LABOR	MAT'L	EQUIPMENT	S/C	TOTAL
Dismantle six (6) 13 MT/H boilers	3	15				15
Upgrade existing 50 MT/H boiler - 50% of new boiler costs - Romanian Supply	8	40	116			156
Install one (1) 50 MT/H boiler Romania quote +50%	15	75		348		423
Freight, insurance, spare parts - 9%				31		31
Upgrade existing steam turbine generator 50% of new-Romanian Supply	5	25	412			437
Install three (3) district water heat exchangers-Romania Supply	1	5		126		131
Install two (2) fuel oil pumps					10	10
Other Improvements - Bulk Allowances						
Civil works - 4%					100	100
Mechanical works - Allow					100	100
Electrical works - Allow					100	100
Subtotal	**32**	**160**	**528**	**505**	**310**	**1503**
Project A/E Services - 6%		90				90
Insurance - 2%			32			32
Contingency - 10% of equipment & 20% of remaining costs		50	112	51	62	275
Subtotal		**300**	**672**	**556**	**372**	**1900**
Custom Duty 15%				18		18
Total Costs - 1993 Cost Level		**300**	**672**	**574**	**372**	**1918**
Owner Costs 10%						192
Total Investment (1993 $)						**2110**

F:\1060\outline.JLT

Table VI-2

GRIRO, ROMANIA - OPTION IA - CAPITAL COST ESTIMATE (1000 $ 1993)
INTERNATIONAL SUPPLY

WORK ITEM	1000 MHS	LABOR	MAT'L	EQUIPMENT	S/C	TOTAL
Dismantle six (6) 13 MT/H boilers	3	15				15
Upgrade existing 50 MT/H boiler - 50% of new boiler costs (Romanian Supply)	8	40	116			156
Install one (1) 50 MT/H boilers Riley quote 7/93	15	75		1698		1773
Freight, insurance, spare parts - 15%				255		255
Upgrade existing steam turbine generators 50% of new-(Romanian Supply)	5	25	412			437
Install three (3) district water heat exchangers J.F.D. Tube quote 7/93	1	5		180		185
Install two (2) fuel oil pumps					10	10
Other Improvements - Bulk Allowances						
Civil works - 4%					100	100
Mechanical works - Allow					100	100
Electrical works - Allow					100	100
Subtotal	**32**	**160**	**528**	**2133**	**310**	**3131**
Project A/E Services - 6%		188				188
Insurance - 2%			66			66
Contingency - 10% of equipment & 20% of remaining costs		70	119	213	62	464
Subtotal		**418**	**713**	**2346**	**372**	**3849**
Custom Duty 15%				370		370
Total Costs - 1993 Cost Level		**418**	**713**	**2716**	**372**	**4219**
Owner Costs 10%						421
Total Investment (1993 $)						**4640**

F:\1060\outline.JLT

127

Table VI-2

GRIRO, ROMANIA - OPTION IB - CAPITAL COST ESTIMATE (1000 $ 1993)
MAXIMIZE ROMANIAN SUPPLY

WORK ITEM	1000 MHS	LABOR	MAT'L	EQUIPMENT	S/C	TOTAL
Dismantle six (6) 13 MT/H boilers	3	15				15
Upgrade existing 50 MT/H boiler - 50% of new boiler costs - Romanian Supply	8	40	116			156
Install two (2) 25 MT/H boilers Romania quote +50%	20	100		489		589
Freight, insurance, spare parts - 9%				44		44
Upgrade existing steam turbine generators 50% of new-Romanian Supply	5	25	412			437
Install three (3) district water heat exchangers-Romania Supply	1	5		126		131
Install two (2) fuel oil pumps					10	10
Other Improvements - Bulk Allowances						
Civil works - 4%					100	100
Mechanical works - Allow					100	100
Electrical works - Allow					100	100
Subtotal	**37**	**185**	**528**	**659**	**310**	**1682**
Project A/E Services - 6%		101				101
Insurance - 2%			36			36
Contingency - 10% of equipment & 20% of remaining costs		57	113	66	62	298
Subtotal		**343**	**677**	**725**		**2117**
Custom Duty 15%				18		18
Total Costs - 1993 Cost Level		**343**	**677**	**743**	**372**	**2135**
Owner Costs 10%						215
Total Investment (1993 $)						**2350**

F:\1060\outline.JLT

Table VI-2

GRIRO, ROMANIA - OPTION IB - CAPITAL COST ESTIMATE (1000 $ 1993)
INTERNATIONAL SUPPLY

WORK ITEM	1000 MHS	LABOR	MAT'L	EQUIPMENT	S/C	TOTAL
Dismantle six (6) 13 MT/H boilers	3	15				15
Upgrade existing 50 MT/H boiler - 50% of new boiler costs - Romanian Supply	8	40	116			156
Install two (2) 25 MT/H boilers Riley quote 7/93	20	100		1700		1800
Freight, insurance, spare parts - 15%				255		255
Upgrade existing steam turbine generators- 50% of new (Romanian Supply)	5	25	412			437
Install three (3) district water heat exchangers J.F.D. Tube quote 7/93	1	5		180		185
Install two (2) fuel oil pumps					10	10
Other Improvements - Bulk Allowances						
Civil works - 4%					100	100
Mechanical works - Allow					100	100
Electrical works - Allow					100	100
Subtotal	**37**	**185**	**528**	**2135**	**310**	**3158**
Project A/E Services - 6%		190				190
Insurance - 2%			67			67
Contingency - 10% of equipment & 20% of remaining costs		75	119	214	62	470
Subtotal		**450**	**714**	**2349**	**372**	**3885**
Custom Duty 15%				371		371
Total Costs - 1993 Cost Level		**450**	**714**	**2720**	**372**	**4256**
Owner Costs 10%						424
Total Investment (1993 $)						**4680**

F:\1060\outline.JLT

Table VI-2

GRIRO, ROMANIA - OPTION II - CAPITAL COST ESTIMATE (1000 $ 1993)
MAXIMIZE ROMANIAN SUPPLY

WORK ITEM	1000 MHS	LABOR	MAT'L	EQUIPMENT	S/C	TOTAL
Dismantle six (6) 13 MT/H boilers + one (1) 1.6 MWe	4	20				20
Upgrade existing 50 MT/H boiler - 50% of new boiler costs - Romanian Supply	8	40	116			156
Install two (2) 55 MT/H boilers Romanian Supply +50%	30	150		849		999
Freight, insurance, spare parts - 9%				76		76
Upgrade existing steam turbine generators 50% of new (Romanian Supply)	5	25	412			437
Install one (1) steam turbine generator - 6 MWe (Incl. freight, etc.) Romanian Supply +50%	10	50		1238		1288
Install three (3) district water heat exchangers-Romanian Supply	1	5		126		131
Install two (2) fuél oil pumps					10	10
Other Improvements - Bulk Allowances						
Civil works - 4%					300	300
Mechanical works - Allow					300	300
Electrical works - Allow					300	300
Subtotal	**58**	**290**	**528**	**2289**	**910**	**4017**
Project A/E Services - 6%		241				241
Insurance - 2%			86			86
Contingency - 10% of equipment & 20% of remaining costs		107	123	229	182	641
Subtotal		**638**	**737**	**2518**	**1092**	**4985**
Custom Duty 15%				54		54
Total Costs - 1993 Cost Level		**638**	**737**	**2572**	**1092**	**5039**
Owner Costs 10%						**501**
Total Investment (1993 $)						**5540**

F:\1060\outline.JLT

Table 11-2

GRIRO, ROMANIA - OPTION II - CAPITAL COST ESTIMATE (1000 $ 1993)
INTERNATIONAL SUPPLY

WORK ITEM	1000 MHS	LABOR	MAT'L	EQUIPMENT	S/C	TOTAL
Dismantle six (6) 13 MT/H boilers	3	15				15
Upgrade existing 50 MT/H boiler - 50% of new boiler costs - Romanian Supply	8	40	116			156
Install two (2) 55 MT/H boilers Riley quote 7/93	30	150		3736		3886
Freight, insurance, spare parts - 15%				560		560
Dismantle one (1) steam turbine generator 1.6 MWe	1	5				5
Upgrade existing steam turbine generator- 50% of new (Romanian Supply)	5	25	412			437
Install one (1) steam turbine generator - 6 MWe - GE quote Hungary (Incl. freight, etc.)	10	50		2300		2350
Install three (3) district water heat exchangers J.F.D. Tube quote 7/93	1	5		180		185
Install two (2) fuel oil pumps					10	10
Other Improvements - Bulk Allowances						
Civil works - 4%					300	300
Mechanical works - Allow					300	300
Electrical works - Allow					300	300
Subtotal	**58**	**290**	**528**	**6776**	**910**	**8504**
Project A/E Services - 6%		510				510
Insurance - 2%			181			181
Contingency - 10% of equipment & 20% of remaining costs		160	142	678	182	1162
Subtotal		**960**	**851**	**7454**	**1092**	**10357**
Custom Duty 15%				1172		1172
Total Costs - 1993 Cost Level		**960**	**851**	**8626**	**1092**	**11529**
Owner Costs 10%						1151
Total Investment (1993 $)						**12680**

F:\1060\outline.JLT

Table VI-2

GRIRO, ROMANIA - OPTION IIIA - CAPITAL COST ESTIMATE (1000 $ 1993)
MAXIMIZE ROMANIAN SUPPLY

WORK ITEM	1000 MHS	LABOR	MAT'L	EQUIPMENT	S/C	TOTAL
Dismantle four (4) 13 MT/H boilers	3	15				15
Upgrade existing 50 MT/H boiler and 2-13 MT/H - 50% of new boiler costs-Romanian Supply	12	60	210			270
Install LM 5000 gas turbine generator Stewart Stevenson quote 6/93	30	150		13500		13650
Freight, insurance, spare parts - 15%				2025		2025
Install vertical HRSG Deltak quote 6/93	30	150		2825		2975
Freight Insurance, spare parts - 15%				424		424
Dismantle one (1) steam turbine generator 1.6 MWe	1	5				5
Upgrade existing 6 MWe steam turbine generator - 50% of new STG (Romanian Supply)	5	25	412			437
Install one (1) new steam turbine generator - 20 MWe - Romanian Supply +50%	15	75		2595		2670
Install three (3) district water heat exchangers Romanian Supply	1	5		126		131
Install 2 F.O. Pumps					10	10
Other Improvements - Bulk Allowances						
Civil works - 4%					1000	1000
Mechanical works					1000	1000
Electrical works					1000	1000
Subtotal	**97**	**485**	**622**	**21495**	**3010**	**25612**
Project A/E Services - 6%		1537				1537
Insurance - 2%			543			543
Contingency - 10% of equipment & 20% of remaining costs		404	233	2150	602	3389
Subtotal		**2426**	**1398**	**23645**	**3612**	**31081**

F:\1060\outline.JLT

134

Table VI-2

GRIRO, ROMANIA - OPTION IIIA - CAPITAL COST ESTIMATE (1000 $ 1993)
MAXIMIZE ROMANIAN SUPPLY

WORK ITEM	1000 MHS	LABOR	MAT'L	EQUIPMENT	S/C	TOTAL
Subtotal		**2426**	**1398**	**23645**	**3612**	**31081**
Custom Duty 15%				3278		3278
Total Costs - 1993 Cost Level		**2426**	**1398**	**26923**	**3612**	**34359**
Owner Costs 10%						3441
Total Investment (1993 $)						**37800**

F:\1060\outline.JLT

Table VI-2

GRIRO, ROMANIA - OPTION IIIA - CAPITAL COST ESTIMATE (1000 $ 1993)
INTERNATIONAL SUPPLY

WORK ITEM	1000 MHS	LABOR	MAT'L	EQUIPMENT	S/C	TOTAL
Dismantle four (4) 13 MT/H boilers	3	15				15
Upgrade existing 50 MT/H boiler and 2-13 MT/H - 50% of new boiler costs - Romanian Supply	12	60	210			270
Install one (1) LM 5000 gas turbine generators Stewart Stevenson quote 6/93	30	150		13500		13650
Freight, insurance, spare parts - 15%				2025		2025
Install two (2) vertical HRSG's Deltak quote 6/93	30	150		2825		2975
Freight, Insurance, spare parts - 15%				424		424
Dismantle one (1) steam turbine generator 1.6 MWe	1	5				5
Upgrade existing 6 MWe steam turbine generator - 50% of new STG Romanian Supply	5	25	412			437
Install one (1) new steam turbine generator - 20 MWe - GE quote Hungary (Incl. Frt., etc.)	15	75		4950		5025
Install three (3) district water heat exchangers J.F.D. Tube quote 7/93	1	5		180		185
Install 2 F.O. Pumps					10	10
Other Improvements - Bulk Allowances						
Civil works - 4%					1000	1000
Mechanical works - Allow					1000	1000
Electrical works - Allow					1000	1000
Subtotal	97	485	622	23904	3010	28021
Project A/E Services - 6%		1681				1681
Insurance - 2%			594			594
Contingency - 10% of equipment & 20% of remaining costs		433	243	2390	602	3668
Subtotal		2599	1459	26294	3612	33964

F:\1060\outline.JLT

136

Table VI-2

GRIRO, ROMANIA - OPTION IIIA - CAPITAL COST ESTIMATE (1000 $ 1993)
INTERNATIONAL SUPPLY

WORK ITEM	1000 MHS	LABOR	MAT'L	EQUIPMENT	S/C	TOTAL
Subtotal		**2599**	**1459**	**26294**	**3612**	**33964**
Custom Duty 15%				4124		4124
Total Costs - 1993 Cost Level		**2599**	**1459**	**30418**	**3612**	**38088**
Owner Costs 10%						3812
Total Investment (1993 $)						**41900**

F:\1060\outline.JLT

37

Table VI-2

GRIRO, ROMANIA - OPTION IIIB - CAPITAL COST ESTIMATE (1000 $ 1993)
MAXIMIZE ROMANIAN SUPPLY

WORK ITEM	1000 MHS	LABOR	MAT'L	EQUIPMENT	S/C	TOTAL
Dismantle four (4) 13 MT/H boilers	3	15				15
Upgrade existing 50 MT/H boiler and 2-13 MT/H - 50% of new boiler costs - Romanian Supply	12	60	210			270
Install two (2) LM 1600 gas turbine generators Stewart Stevenson quote 6/93	40	200		15000		15200
Freight, insurance, spare parts - 15%				2250		2250
Install two (2) vertical HRSG's Deltak quote 6/93	40	200		3370		3570
Freight Insurance, spare parts - 9%				506		506
Dismantle one (1) steam turbine generator 1.6 MWe	1	5				5
Upgrade existing 6 MWe steam turbine generator - 50% of new STG Romanian Supply	5	25	412			437
Install one (1) new steam turbine generator - 17 MWe - Romanian Supply +50% (Incl. Frt., etc.)	15	75		2595		2670
Install three (3) district water heat exchangers Romanian Supply	1	5		126		131
Install 2 F.O. Pumps					10	10
Other Improvements - Bulk Allowances						
Mechanical works					1200	1200
Civil works					1200	1200
Electrical works - Allow					1200	1200
Subtotal	**117**	**585**	**622**	**23847**	**3610**	**28664**
Project A/E Services - 6%		1720				1720
Insurance - 2%			608			608
Contingency - 10% of equipment & 20% of remaining costs		461	246	2385	722	3814
Subtotal		**2766**	**1476**	**26232**	**4332**	**34806**
Custom Duty 15%				3702		3702
Total Costs - 1993 Cost Level		**2766**	**1476**	**29934**	**4332**	**38508**
Owner Costs 10%						3852
Total Investment (1993 $)						**42360**

F:\1060\outline.JLT

138

Table 2

GRIRO, ROMANIA - OPTION IIIB - CAPITAL COST ESTIMATE (1000 $ 1993)
INTERNATIONAL SUPPLY

WORK ITEM	1000 MHS	LABOR	MAT'L	EQUIPMENT	S/C	TOTAL
Dismantle four (4) 13 MT/H boilers	3	15				15
Upgrade existing 50 MT/H boiler and 2-13 MT/H - 50% of new boiler costs - Romanian Supply	12	60	210			270
Install two (2) LM 1600 gas turbine generators Stewart Stevenson quote 6/93	40	200		15000		15200
Freight, insurance, spare parts - 15%				2250		2250
Install two (2) vertical HRSG's Deltak quote 6/93	40	200		3370		3570
Freight, Insurance, spare parts - 15%				506		506
Dismantle one (1) steam turbine generator 1.6 MWe	1	5				5
Upgrade existing 6 MWe steam turbine generator - 50% of new STG Romanian Supply	5	25	412			437
Install one (1) new steam turbine generator - 17 MWe - GE quote Hungary (Incl. Frt., etc.)	15	75		4950		5025
Install three (3) district water heat exchangers J.F.D. Tube quote 7/93	1	5		180		185
Install 2 F.O. Pumps					10	10
Other Improvements - Bulk Allowances						
Civil works - 4%					1200	1200
Mechanical works - Allow					1200	1200
Electrical works - Allow					1200	1200
Subtotal	**117**	**585**	**622**	**26256**	**3610**	**31073**
Project A/E Services - 6%		1864				1864
Insurance - 2%			659			659
Contingency - 10% of equipment & 20% of remaining costs		490	256	2626	722	4094
Subtotal		**2939**	**1537**	**28882**	**4332**	**37690**

F:\1060\outline.JLT

Table VI-2

GRIRO, ROMANIA - OPTION IIIB - CAPITAL COST ESTIMATE (1000 $ 1993)
INTERNATIONAL SUPPLY

WORK ITEM	1000 MHS	LABOR	MAT'L	EQUIPMENT	S/C	TOTAL
Subtotal		**2939**	**1537**	**28882**	**4332**	**37690**
Custom Duty 15%				4548		4548
Total Costs - 1993 Cost Level		**2939**	**1537**	**33430**	**4332**	**42238**
Owner Costs 10%						4222
Total Investment (1993 $)						**46460**

TABLE VII-2

JOB # 1060 ROMANIA PROJECT

K & M ENGINEERING & CONSULTING CORPORATION

REHABILITATED POWER PLANTS
GRIRO

BENEFIT-COST ANALYSIS (MLEI)

PRICED: MAHYLIS
DATE: 30-Aug-93

ITEM#	YEAR	ELECTRIC SALES	HEAT SALES	TOTAL BENEFIT	INVEST COST	FUEL COST	MAINT. COST	FACTORY OVERHEADS	TOTAL COST
01	1993								
02	1994								
03	1995				411				
04	1996				1,235				
05	1997	1,041	2,320			944	27	27	
06	1998	1,041	2,320			944	27	27	
07	1999	1,041	2,320			944	50	27	
08	2000	1,041	2,320			944	27	27	
09	2001	1,041	2,320			944	27	27	
10	2002	1,041	2,320			944	100	27	
11	2003	1,041	2,320			944	27	27	
12	2004	1,041	2,320			944	27	27	
13	2005	1,041	2,320			944	50	27	
14	2006	1,041	2,320			944	27	27	
15	2007	1,041	2,320			944	27	27	
16	2008	1,041	2,320			944	150	27	
17	2009	1,041	2,320			944	27	27	
18	2010	1,041	2,320			944	27	27	
19	2011	1,041	2,320			944	50	27	
20	2012	1,041	2,320			944	27	27	
21	2013	1,041	2,320			944	27	27	
22	2014	1,041	2,320			944	300	27	
23	2015	1,041	2,320			944	27	27	
24	2016	1,041	2,320			944	27	27	
25	2017								
26	2018								
27	2019								
28	2020								
	PV	6,732	15,003	21,735	1,192	6,105	302	175	7,774

CPV(BENEFIT)/CPV(COST) 2.796

NOTES:
OPTION IA MAXIMIZES ROMANIAN SUPPLY.

TABLE VII-2

JOB # 1060 ROMANIA PROJECT

K & M ENGINEERING & CONSULTING CORPORATION

REHABILITATED POWER PLANTS
GRIRO

BENEFIT-COST ANALYSIS (MLEI)

PRICED: MAHYLIS
DATE: 30-Aug-93

ITEM#	YEAR	ELECTRIC SALES	HEAT SALES	TOTAL BENEFIT	INVEST COST	FUEL COST	MAINT. COST	FACTORY OVERHEADS	TOTAL COST
01	1993								
02	1994								
03	1995				905				
04	1996				2,714				
05	1997	1,041	2,320			944	27	27	
06	1998	1,041	2,320			944	27	27	
07	1999	1,041	2,320			944	50	27	
08	2000	1,041	2,320			944	27	27	
09	2001	1,041	2,320			944	27	27	
10	2002	1,041	2,320			944	100	27	
11	2003	1,041	2,320			944	27	27	
12	2004	1,041	2,320			944	27	27	
13	2005	1,041	2,320			944	50	27	
14	2006	1,041	2,320			944	27	27	
15	2007	1,041	2,320			944	27	27	
16	2008	1,041	2,320			944	150	27	
17	2009	1,041	2,320			944	27	27	
18	2010	1,041	2,320			944	27	27	
19	2011	1,041	2,320			944	50	27	
20	2012	1,041	2,320			944	27	27	
21	2013	1,041	2,320			944	27	27	
22	2014	1,041	2,320			944	300	27	
23	2015	1,041	2,320			944	27	27	
24	2016	1,041	2,320			944	27	27	
25	2017								
26	2018								
27	2019								
28	2020								
	PV	6,732	15,003	21,735	2,621	6,105	302	175	9,203

CPV(BENEFIT)/CPV(COST) 2.362

NOTES:
OPTION IA INTERNATIONAL SUPPLY.

142

TABLE VII–2

JOB # 1060 ROMANIA PROJECT

K & M ENGINEERING & CONSULTING CORPORATION

REHABILITATED POWER PLANTS
GRIRO

BENEFIT–COST ANALYSIS (MLEI)

PRICED: MAHYLIS
DATE: 30–Aug–93

ITEM#	YEAR	ELECTRIC SALES	HEAT SALES	TOTAL BENEFIT	INVEST COST	FUEL COST	MAINT. COST	FACTORY OVERHEADS	TOTAL COST
01	1993								
02	1994								
03	1995				459				
04	1996				1,375				
05	1997	1,041	2,320			944	30	30	
06	1998	1,041	2,320			944	30	30	
07	1999	1,041	2,320			944	50	30	
08	2000	1,041	2,320			944	30	30	
09	2001	1,041	2,320			944	30	30	
10	2002	1,041	2,320			944	100	30	
11	2003	1,041	2,320			944	30	30	
12	2004	1,041	2,320			944	30	30	
13	2005	1,041	2,320			944	50	30	
14	2006	1,041	2,320			944	30	30	
15	2007	1,041	2,320			944	30	30	
16	2008	1,041	2,320			944	150	30	
17	2009	1,041	2,320			944	30	30	
18	2010	1,041	2,320			944	30	30	
19	2011	1,041	2,320			944	50	30	
20	2012	1,041	2,320			944	30	30	
21	2013	1,041	2,320			944	30	30	
22	2014	1,041	2,320			944	300	30	
23	2015	1,041	2,320			944	30	30	
24	2016	1,041	2,320			944	30	30	
25	2017								
26	2018								
27	2019								
28	2020								
	PV	6,732	15,003	21,735	1,329	6,105	316	194	7,943

CPV(BENEFIT)/CPV(COST) 2.736

NOTES:
OPTION IB MAXIMIZES ROMANIAN SUPPLY.

TABLE VII–2

JOB # 1060 ROMANIA PROJECT

K & M ENGINEERING & CONSULTING CORPORATION

REHABILITATED POWER PLANTS
GRIRO

BENEFIT–COST ANALYSIS (MLEI)

PRICED: MAHYLIS
DATE: 30–Aug–93

ITEM#	YEAR	ELECTRIC SALES	HEAT SALES	TOTAL BENEFIT	INVEST COST	FUEL COST	MAINT. COST	FACTORY OVERHEADS	TOTAL COST
01	1993								
02	1994								
03	1995				913				
04	1996				2,738				
05	1997	1,041	2,320			944	30	30	
06	1998	1,041	2,320			944	30	30	
07	1999	1,041	2,320			944	50	30	
08	2000	1,041	2,320			944	30	30	
09	2001	1,041	2,320			944	30	30	
10	2002	1,041	2,320			944	100	30	
11	2003	1,041	2,320			944	30	30	
12	2004	1,041	2,320			944	30	30	
13	2005	1,041	2,320			944	50	30	
14	2006	1,041	2,320			944	30	30	
15	2007	1,041	2,320			944	30	30	
16	2008	1,041	2,320			944	150	30	
17	2009	1,041	2,320			944	30	30	
18	2010	1,041	2,320			944	30	30	
19	2011	1,041	2,320			944	50	30	
20	2012	1,041	2,320			944	30	30	
21	2013	1,041	2,320			944	30	30	
22	2014	1,041	2,320			944	300	30	
23	2015	1,041	2,320			944	30	30	
24	2016	1,041	2,320			944	30	30	
25	2017								
26	2018								
27	2019								
28	2020								
	PV	6,732	15,003	21,735	2,645	6,105	316	194	9,259

CPV(BENEFIT)/CPV(COST) 2.347

NOTES:
OPTION IB INTERNATIONAL SUPPLY

TABLE VII–2

JOB # 1060 ROMANIA PROJECT

K & M ENGINEERING & CONSULTING CORPORATION

REHABILITATED POWER PLANTS
GRIRO

BENEFIT–COST ANALYSIS (MLEI)

PRICED: MAHYLIS
DATE: 30–Aug–93

ITEM#	YEAR	ELECTRIC SALES	HEAT SALES	TOTAL BENEFIT	INVEST COST	FUEL COST	MAINT. COST	FACTORY OVERHEADS	TOTAL COST
01	1993								
02	1994								
03	1995				1,080				
04	1996				3,241				
05	1997	3,413	2,320			3,039	71	71	
06	1998	3,413	2,320			3,039	71	71	
07	1999	3,413	2,320			3,039	100	71	
08	2000	3,413	2,320			3,039	71	71	
09	2001	3,413	2,320			3,039	71	71	
10	2002	3,413	2,320			3,039	200	71	
11	2003	3,413	2,320			3,039	71	71	
12	2004	3,413	2,320			3,039	71	71	
13	2005	3,413	2,320			3,039	100	71	
14	2006	3,413	2,320			3,039	71	71	
15	2007	3,413	2,320			3,039	71	71	
16	2008	3,413	2,320			3,039	300	71	
17	2009	3,413	2,320			3,039	71	71	
18	2010	3,413	2,320			3,039	71	71	
19	2011	3,413	2,320			3,039	100	71	
20	2012	3,413	2,320			3,039	71	71	
21	2013	3,413	2,320			3,039	71	71	
22	2014	3,413	2,320			3,039	600	71	
23	2015	3,413	2,320			3,039	71	71	
24	2016	3,413	2,320			3,039	71	71	
25	2017								
26	2018								
27	2019								
28	2020								
	PV	22,072	15,003	37,075	3,130	19,653	682	459	23,924

CPV(BENEFIT)/CPV(COST) 1.550

NOTES:
OPTION II MAXIMIZES ROMANIAN SUPPLY.

TABLE VII–2

JOB # 1060 ROMANIA PROJECT

K & M ENGINEERING & CONSULTING CORPORATION

REHABILITATED POWER PLANTS
GRIRO

BENEFIT–COST ANALYSIS (MLEI)

PRICED: MAHYLIS
DATE: 30–Aug–93

ITEM#	YEAR	ELECTRIC SALES	HEAT SALES	TOTAL BENEFIT	INVEST COST	FUEL COST	MAINT. COST	FACTORY OVERHEADS	TOTAL COST
01	1993								
02	1994								
03	1995				2,473				
04	1996				7,418				
05	1997	3,413	2,320			3,039	71	71	
06	1998	3,413	2,320			3,039	71	71	
07	1999	3,413	2,320			3,039	100	71	
08	2000	3,413	2,320			3,039	71	71	
09	2001	3,413	2,320			3,039	71	71	
10	2002	3,413	2,320			3,039	200	71	
11	2003	3,413	2,320			3,039	71	71	
12	2004	3,413	2,320			3,039	71	71	
13	2005	3,413	2,320			3,039	100	71	
14	2006	3,413	2,320			3,039	71	71	
15	2007	3,413	2,320			3,039	71	71	
16	2008	3,413	2,320			3,039	300	71	
17	2009	3,413	2,320			3,039	71	71	
18	2010	3,413	2,320			3,039	71	71	
19	2011	3,413	2,320			3,039	100	71	
20	2012	3,413	2,320			3,039	71	71	
21	2013	3,413	2,320			3,039	71	71	
22	2014	3,413	2,320			3,039	600	71	
23	2015	3,413	2,320			3,039	71	71	
24	2016	3,413	2,320			3,039	71	71	
25	2017								
26	2018								
27	2019								
28	2020								
	PV	22,072	15,003	37,075	7,165	19,653	682	459	27,958

CPV(BENEFIT)/CPV(COST) 1.326

NOTES:
OPTION II INTERNATIONAL SUPPLY

146

TABLE VII–2

JOB # 1060 ROMANIA PROJECT

K & M ENGINEERING & CONSULTING CORPORATION

REHABILITATED POWER PLANTS
GRIRO

BENEFIT–COST ANALYSIS (MLEI)

PRICED: MAHYLIS
DATE: 30–Aug–93

ITEM#	YEAR	ELECTRIC SALES	HEAT SALES	TOTAL BENEFIT	INVEST COST	FUEL COST	MAINT. COST	FACTORY OVERHEADS	TOTAL COST
01	1993								
02	1994								
03	1995				4,423				
04	1996				7,371				
05	1997				17,690				
06	1998	13,787	2,320			6,440	479	479	
07	1999	13,787	2,320			6,440	479	479	
08	2000	13,787	2,320			6,440	479	479	
09	2001	13,787	2,320			6,440	479	479	
10	2002	13,787	2,320			6,440	479	479	
11	2003	13,787	2,320			6,440	1000	479	
12	2004	13,787	2,320			6,440	479	479	
13	2005	13,787	2,320			6,440	479	479	
14	2006	13,787	2,320			6,440	479	479	
15	2007	13,787	2,320			6,440	479	479	
16	2008	13,787	2,320			6,440	479	479	
17	2009	13,787	2,320			6,440	1500	479	
18	2010	13,787	2,320			6,440	479	479	
19	2011	13,787	2,320			6,440	479	479	
20	2012	13,787	2,320			6,440	479	479	
21	2013	13,787	2,320			6,440	479	479	
22	2014	13,787	2,320			6,440	479	479	
23	2015	13,787	2,320			6,440	3000	479	
24	2016	13,787	2,320			6,440	479	479	
25	2017	13,787	2,320			6,440	479	479	
26	2018								
27	2019								
28	2020								
	PV	81,797	13,764	95,562	20,134	38,208	3,627	2,842	64,811

CPV(BENEFIT)/CPV(COST) 1.474

NOTES:
OPTION IIIA MAXIMIZES ROMANIAN SUPPLY.

TABLE VII-2

JOB # 1060 ROMANIA PROJECT

K & M ENGINEERING & CONSULTING CORPORATION

REHABILITATED POWER PLANTS
GRIRO

BENEFIT-COST ANALYSIS (MLEI)

PRICED: MAHYLIS
DATE: 30-Aug-93

ITEM#	YEAR	ELECTRIC SALES	HEAT SALES	TOTAL BENEFIT	INVEST COST	FUEL COST	MAINT. COST	FACTORY OVERHEADS	TOTAL COST
01	1993								
02	1994								
03	1995				4,902				
04	1996				8,171				
05	1997				19,609				
06	1998	13,787	2,320			6,440	479	479	
07	1999	13,787	2,320			6,440	479	479	
08	2000	13,787	2,320			6,440	479	479	
09	2001	13,787	2,320			6,440	479	479	
10	2002	13,787	2,320			6,440	479	479	
11	2003	13,787	2,320			6,440	1000	479	
12	2004	13,787	2,320			6,440	479	479	
13	2005	13,787	2,320			6,440	479	479	
14	2006	13,787	2,320			6,440	479	479	
15	2007	13,787	2,320			6,440	479	479	
16	2008	13,787	2,320			6,440	479	479	
17	2009	13,787	2,320			6,440	1500	479	
18	2010	13,787	2,320			6,440	479	479	
19	2011	13,787	2,320			6,440	479	479	
20	2012	13,787	2,320			6,440	479	479	
21	2013	13,787	2,320			6,440	479	479	
22	2014	13,787	2,320			6,440	479	479	
23	2015	13,787	2,320			6,440	3000	479	
24	2016	13,787	2,320			6,440	479	479	
25	2017	13,787	2,320			6,440	479	479	
26	2018								
27	2019								
28	2020								
	PV	81,797	13,764	95,562	22,318	38,208	3,627	2,842	66,995

CPV(BENEFIT)/CPV(COST) 1.426

NOTES:
OPTION IIIA INTERNATIONAL SUPPLY

TABLE VII-2

JOB # 1060 ROMANIA PROJECT

K & M ENGINEERING & CONSULTING CORPORATION

REHABILITATED POWER PLANTS
GRIRO

BENEFIT-COST ANALYSIS (MLEI)

PRICED: MAHYLIS
DATE: 30-Aug-93

ITEM#	YEAR	ELECTRIC SALES	HEAT SALES	TOTAL BENEFIT	INVEST COST	FUEL COST	MAINT. COST	FACTORY OVERHEADS	TOTAL COST
01	1993								
02	1994								
03	1995				4,956				
04	1996				8,260				
05	1997				19,824				
06	1998	11,071	2,320			5,714	555	555	
07	1999	11,071	2,320			5,714	555	555	
08	2000	11,071	2,320			5,714	555	555	
09	2001	11,071	2,320			5,714	555	555	
10	2002	11,071	2,320			5,714	555	555	
11	2003	11,071	2,320			5,714	1000	555	
12	2004	11,071	2,320			5,714	555	555	
13	2005	11,071	2,320			5,714	555	555	
14	2006	11,071	2,320			5,714	555	555	
15	2007	11,071	2,320			5,714	555	555	
16	2008	11,071	2,320			5,714	555	555	
17	2009	11,071	2,320			5,714	1500	555	
18	2010	11,071	2,320			5,714	555	555	
19	2011	11,071	2,320			5,714	555	555	
20	2012	11,071	2,320			5,714	555	555	
21	2013	11,071	2,320			5,714	555	555	
22	2014	11,071	2,320			5,714	555	555	
23	2015	11,071	2,320			5,714	3000	555	
24	2016	11,071	2,320			5,714	555	555	
25	2017	11,071	2,320			5,714	555	555	
26	2018								
27	2019								
28	2020								
	PV	65,683	13,764	79,448	22,563	33,901	4,020	3,293	63,777

CPV(BENEFIT)/CPV(COST) 1.246

NOTES:
OPTION IIIB MAXIMIZES ROMANIAN SUPPLY.

TABLE VII–2

JOB # 1060 ROMANIA PROJECT

K & M ENGINEERING & CONSULTING CORPORATION

REHABILITATED POWER PLANTS
GRIRO

BENEFIT–COST ANALYSIS (MLEI)

PRICED: MAHYLIS
DATE: 30–Aug–93

ITEM#	YEAR	ELECTRIC SALES	HEAT SALES	TOTAL BENEFIT	INVEST COST	FUEL COST	MAINT. COST	FACTORY OVERHEADS	TOTAL COST
01	1993								
02	1994								
03	1995				5,435				
04	1996				9,060				
05	1997				21,743				
06	1998	11,071	2,320			5,714	555	555	
07	1999	11,071	2,320			5,714	555	555	
08	2000	11,071	2,320			5,714	555	555	
09	2001	11,071	2,320			5,714	555	555	
10	2002	11,071	2,320			5,714	555	555	
11	2003	11,071	2,320			5,714	1000	555	
12	2004	11,071	2,320			5,714	555	555	
13	2005	11,071	2,320			5,714	555	555	
14	2006	11,071	2,320			5,714	555	555	
15	2007	11,071	2,320			5,714	555	555	
16	2008	11,071	2,320			5,714	555	555	
17	2009	11,071	2,320			5,714	1500	555	
18	2010	11,071	2,320			5,714	555	555	
19	2011	11,071	2,320			5,714	555	555	
20	2012	11,071	2,320			5,714	555	555	
21	2013	11,071	2,320			5,714	555	555	
22	2014	11,071	2,320			5,714	555	555	
23	2015	11,071	2,320			5,714	3000	555	
24	2016	11,071	2,320			5,714	555	555	
25	2017	11,071	2,320			5,714	555	555	
26	2018								
27	2019								
28	2020								
	PV	65,683	13,764	79,448	24,747	33,901	4,020	3,293	65,961

CPV(BENEFIT)/CPV(COST) 1.204

NOTES:
OPTION IIIB INTERNATIONAL SUPPLY

TABLE VII-3
Annual Power, Heat Production and Fuel Consumption Assumptions

Option	IA	IB	II	IIIA	IIIB
MWe	6	6	12	60	60
Thermal Production T cal/yr	616	616	616	616	616
Power Production Gwh	61	61	145	516	419
Fuel Consumption					
Heavy Fuel Oil MT	1025	1025	2454	20,240	22,520
Natural Gas Million M^3	126	126	295	50	50
Light Fuel Oil MT				59,016	48,528

TABLE VII-4

THE PARAMETERS USED ARE AS FOLLOWS:

OPTIONS	UNIT	IA	IB	II	IIIA	IIIB
I. TODAY'S POWER PLANT						
A. Current Production						
Electricity	Gwh/yr	23.6	23.6	23.6	23.6	23.6
Heat	Gcal/yr	296,000	296,000	296,000	296,000	296,000
Fuel - Fuel Oil Natural Gas	MT/yr Mil CM	398 48.8	398 48.8	398 48.8	398 48.8	398 48.8
B. Production - Using Rehabilitated Power Plants						
Electricity	GWh/yr	60.8	60.8	145.5		
Heat	GCal/yr	616,000	616,000	616,000	49,000	49,000
Fuel - Heavy Fuel Oil Natural Gas	MT/yr Mil. M^3	1025 125.7	1025 125.7	2454 296	0 49.7	0 49.7
II. COMBINED CYCLE						
GT Electricity Capacity W/S	MWe	-	-	-	49/62.1	41.9/43.2
Winter Operation - Heat Capacity	GCal/hr	-	-	-	77.0	77.0
Summer Operation - Heat Capacity	GCal/hr	-	-	-	26.6	26.6
GT Utilization Hours	h/yr	8000	8000	8000	8000	8000
• Winter Operation	h/yr	4600	4600	4600	4600	4600
• Summer Operation	h/yr	3400	3400	3400	3400	3400
Electric Production	GWh/yr	-	-	-	516	419
Heat Production	GCal/yr	-	-	-	567,000	567,000
Fuel - Light Oil/Heavy Oil	MT/yr	-	-	-	59,016/20,240	48,528/22,520
Heat Rate	KJ/KWh	-	-	-	9469/10030	9773/10030

F:\1060\outline.JLT

TABLE VII - 4 (Continued)

THE PARAMETERS USED ARE AS FOLLOWS:

OPTIONS	UNIT	IA	IB	II	IIIA	IIIB
III.INVESTMENT COST -	MUS$					
MAX. ROMANIAN SUPPLY		2.23	2.48	5.85	40.88	47.27
INT'L SUPPLY		4.89	4.94	13.37	44.06	51.85
IV. UNIT COSTS						
Fuel - Energy charge						
• Light Oil - GTG	Lei/MT				84,825	84,825
• Heavy Oil (Boilers)	Lei/MT	71,800	71,800	71,800	71,800	71,800
• Natural Gas	Lei/m^3	11.7	11.7	11.7	11.7	11.7
Electric						
• Power Charge	Lei/kwh	28	28	28	28	28
Heat Supply						
• Energy Charge Average	Lei/Gcal	7248	7248	7248	7248	7248
Maintenance	% Invest	1.5%	1.5%	1.5%	1.5%	1.5%
Factory Overhead	% Invest	1.5%	1.5%	1.5%	1.5%	1.5%
V. OTHER						

Discount Rate 9%
Currency 1 US$ = 780 Lei
Capacity Factor (Availability) 91%

F:\1060\outline.JLT

TABLE VII-5

GRIRO, ROMANIA
ADDITIONAL BENEFITS/COSTS

					Options		
			IA	IB	II	IIIA	IIIB
Operating Benefits - Yearly	Unit	Rate					
Electric Sales:		28 Lei/kwh					
New PP	mil Lei		1702	1702	4074	14,448	11,732
Today's PP	mil Lei		661	661	661	661	661
Increase	mil Lei		1041	1041	3413	13,787	11,071
Heat Sales		7248 Lei/Gcal					
New PP	mil Lei		4465	4465	4465	4465	4465
Today's PP	mil Lei		2145	2145	2145	2145	2145
Increase	mil Lei		2320	2320	2320	2320	2320
Total Increase - Benefits	mil Lei		3361	3361	5733	16107	13391
Operating Costs - Yearly							
Fuel		Various					
New PP	mil Lei		1544	1544	3639	7040	6314
Today's PP	mil Lei		600	600	600	600	600
Increase - Fuel	mil Lei		944	944	3039	6440	5714
Increase - Maintenance	mil Lei		27	27	71	479	555
Increase - Factory Overhead	mil Lei		27	27	71	479	555

mil = million

F:\1060\outline.JLT

TABLE VII-7

JOB# 1060 ROMANIA PROJECT — K & M ENGINEERING & CONSULTING CORPORATION

REHABILITATED POWER PLANTS — RATE OF RETURN ESTIMATE — PRICED: MAHYLIS
GRIRO — DATE: 30-Aug-93

ITEM#	DESCRIPTION	PRODUCTION ELECTRIC (GWH)	PRODUCTION HEAT (Tcal)	BENEFITS-SALES ELECTRIC ($MILL)	BENEFITS-SALES HEAT ($MILL)	BENEFITS-SALES TOTAL ($MILL)	COSTS INVEST. ($MILL)	COSTS FUEL ($MILL)	COSTS O&M ($MILL)	COSTS TOTAL ($MILL)	NET BENEFITS ($MILL)	PRESENT VALUES CUMUL. ($MILL)	PRESENT VALUES YEARLY ($MILL)
01	1993												
02	1994												
03	1995						0.53			0.53	-0.53	-0.38	-0.38
04	1996						1.58			1.58	-1.58	-1.38	-1.01
05	1997	37	320	1.34	2.97	4.31		1.21	0.07	1.28	3.03	0.34	1.72
06	1998	37	320	1.34	2.97	4.31		1.21	0.07	1.28	3.03	1.87	1.53
07	1999	37	320	1.34	2.97	4.31		1.21	0.10	1.31	3.00	3.23	1.36
08	2000	37	320	1.34	2.97	4.31		1.21	0.07	1.28	3.03	4.45	1.22
09	2001	37	320	1.34	2.97	4.31		1.21	0.07	1.28	3.03	5.54	1.09
10	2002	37	320	1.34	2.97	4.31		1.21	0.16	1.37	2.94	6.49	0.95
11	2003	37	320	1.34	2.97	4.31		1.21	0.07	1.28	3.03	7.36	0.87
12	2004	37	320	1.34	2.97	4.31		1.21	0.07	1.28	3.03	8.14	0.78
13	2005	37	320	1.34	2.97	4.31		1.21	0.10	1.31	3.00	8.83	0.69
14	2006	37	320	1.34	2.97	4.31		1.21	0.07	1.28	3.03	9.45	0.62
15	2007	37	320	1.34	2.97	4.31		1.21	0.07	1.28	3.03	10.00	0.55
16	2008	37	320	1.34	2.97	4.31		1.21	0.23	1.44	2.87	10.47	0.47
17	2009	37	320	1.34	2.97	4.31		1.21	0.07	1.28	3.03	10.91	0.44
18	2010	37	320	1.34	2.97	4.31		1.21	0.07	1.28	3.03	11.30	0.39
19	2011	37	320	1.34	2.97	4.31		1.21	0.10	1.31	3.00	11.65	0.35
20	2012	37	320	1.34	2.97	4.31		1.21	0.07	1.28	3.03	11.96	0.31
21	2013	37	320	1.34	2.97	4.31		1.21	0.07	1.28	3.03	12.24	0.28
22	2014	37	320	1.34	2.97	4.31		1.21	0.42	1.63	2.68	12.47	0.22
23	2015	37	320	1.34	2.97	4.31		1.21	0.07	1.28	3.03	12.69	0.22
24	2016	37	320	1.34	2.97	4.31		1.21	0.07	1.28	3.03	12.89	0.20

IRR = 1.11999 PV= 1

ASSUMPTIONS:
1.THE PRODUCTION IS ADDITIONAL PRODUCTION RESULTING FROM THE INVESTMENT.
2.ELECTRICITY PRICE $35.90/MWeH.
3.HEAT PRICE $9.29/Gcal.
4.INVESTMENTS ARE IN CONSTANT 1993 PRICES AND INCLUDE CONTINGENCIES,INTEREST DURING CONSTRUCTION.
5.THE FUEL ESTIMATE IS FOR ADDITIONAL FUEL CONSUMPTION.
6.FUTURE ESCALATION,INTEREST ON LOANS,CLIENT OR OWNER COSTS ARE NOT INCLUDED IN THIS ANALYSIS.
7.EXCHANGE RATE US$1 = 780LEI.
8.FOR OPTION IA-ROMANIAN SUPPLY.

155

TABLE VII-7

JOB# 1060 ROMANIA PROJECT — K & M ENGINEERING & CONSULTING CORPORATION

REHABILITATED POWER PLANTS — RATE OF RETURN ESTIMATE — PRICED: MAHYLIS

GRIRO — DATE: 30-Aug-93

ITEM#	DESCRIPTION	PRODUCTION ELECTRIC (GWH)	PRODUCTION HEAT (Tcal)	BENEFITS-SALES ELECTRIC ($MILL)	BENEFITS-SALES HEAT ($MILL)	BENEFITS-SALES TOTAL ($MILL)	COSTS INVEST. ($MILL)	COSTS FUEL ($MILL)	COSTS O&M ($MILL)	COSTS TOTAL ($MILL)	NET BENEFITS ($MILL)	PRESENT VALUES CUMUL. ($MILL)	PRESENT VALUES YEARLY ($MILL)
01	1993												
02	1994												
03	1995						1.16			1.16	-1.16	-0.83	-0.83
04	1996						3.48			3.48	-3.48	-3.04	-2.21
05	1997	37	320	1.34	2.97	4.31		1.21	0.07	1.28	3.03	-1.32	1.72
06	1998	37	320	1.34	2.97	4.31		1.21	0.07	1.28	3.03	0.22	1.53
07	1999	37	320	1.34	2.97	4.31		1.21	0.10	1.31	3.00	1.57	1.36
08	2000	37	320	1.34	2.97	4.31		1.21	0.07	1.28	3.03	2.80	1.22
09	2001	37	320	1.34	2.97	4.31		1.21	0.07	1.28	3.03	3.89	1.09
10	2002	37	320	1.34	2.97	4.31		1.21	0.16	1.37	2.94	4.83	0.95
11	2003	37	320	1.34	2.97	4.31		1.21	0.07	1.28	3.03	5.71	0.87
12	2004	37	320	1.34	2.97	4.31		1.21	0.07	1.28	3.03	6.48	0.78
13	2005	37	320	1.34	2.97	4.31		1.21	0.10	1.31	3.00	7.17	0.69
14	2006	37	320	1.34	2.97	4.31		1.21	0.07	1.28	3.03	7.79	0.62
15	2007	37	320	1.34	2.97	4.31		1.21	0.07	1.28	3.03	8.34	0.55
16	2008	37	320	1.34	2.97	4.31		1.21	0.23	1.44	2.87	8.81	0.47
17	2009	37	320	1.34	2.97	4.31		1.21	0.07	1.28	3.03	9.25	0.44
18	2010	37	320	1.34	2.97	4.31		1.21	0.07	1.28	3.03	9.65	0.39
19	2011	37	320	1.34	2.97	4.31		1.21	0.10	1.31	3.00	9.99	0.35
20	2012	37	320	1.34	2.97	4.31		1.21	0.07	1.28	3.03	10.31	0.31
21	2013	37	320	1.34	2.97	4.31		1.21	0.07	1.28	3.03	10.59	0.28
22	2014	37	320	1.34	2.97	4.31		1.21	0.42	1.63	2.68	10.81	0.22
23	2015	37	320	1.34	2.97	4.31		1.21	0.07	1.28	3.03	11.03	0.22
24	2016	37	320	1.34	2.97	4.31		1.21	0.07	1.28	3.03	11.23	0.20

IRR = 0.56970 PV= 0

ASSUMPTIONS:
1.THE PRODUCTION IS ADDITIONAL PRODUCTION RESULTING FROM THE INVESTMENT.
2.ELECTRICITY PRICE $35.90/MWeH.
3.HEAT PRICE $9.29/Gcal.
4.INVESTMENTS ARE IN CONSTANT 1993 PRICES AND INCLUDE CONTINGENCIES,INTEREST DURING CONSTRUCTION.
5.THE FUEL ESTIMATE IS FOR ADDITIONAL FUEL CONSUMPTION.
6.FUTURE ESCALATION,INTEREST ON LOANS,CLIENT OR OWNER COSTS ARE NOT INCLUDED IN THIS ANALYSIS.
7.EXCHANGE RATE US$1 = 780LEI.
8.FOR OPTION IA-INTERNATIONAL SUPPLY.

TABLE VII-7

JOB# 1060 ROMANIA PROJECT — K & M ENGINEERING & CONSULTING CORPORATION

REHABILITATED POWER PLANTS — RATE OF RETURN ESTIMATE — PRICED: MAHYLIS
GRIRO — DATE: 30-Aug-93

ITEM#	DESCRIPTION	PRODUCTION ELECTRIC (GWH)	PRODUCTION HEAT (Tcal)	BENEFITS-SALES ELECTRIC ($MILL)	BENEFITS-SALES HEAT ($MILL)	BENEFITS-SALES TOTAL ($MILL)	COSTS INVEST. ($MILL)	COSTS FUEL ($MILL)	COSTS O&M ($MILL)	COSTS TOTAL ($MILL)	NET BENEFITS ($MILL)	PRESENT VALUES CUMUL. ($MILL)	PRESENT VALUES YEARLY ($MILL)
01	1993												
02	1994												
03	1995						0.59			0.72	-0.72	-0.51	-0.51
04	1996						1.76			1.76	-1.76	-1.63	-1.12
05	1997	37	320	1.34	2.97	4.31		1.21	0.07	1.28	3.03	0.09	1.72
06	1998	37	320	1.34	2.97	4.31		1.21	0.08	1.29	3.02	1.62	1.53
07	1999	37	320	1.34	2.97	4.31		1.21	0.10	1.31	3.00	2.97	1.36
08	2000	37	320	1.34	2.97	4.31		1.21	0.07	1.28	3.03	4.20	1.22
09	2001	37	320	1.34	2.97	4.31		1.21	0.08	1.29	3.02	5.29	1.09
10	2002	37	320	1.34	2.97	4.31		1.21	0.17	1.38	2.93	6.23	0.94
11	2003	37	320	1.34	2.97	4.31		1.21	0.07	1.28	3.03	7.10	0.87
12	2004	37	320	1.34	2.97	4.31		1.21	0.08	1.29	3.02	7.87	0.77
13	2005	37	320	1.34	2.97	4.31		1.21	0.10	1.31	3.00	8.56	0.69
14	2006	37	320	1.34	2.97	4.31		1.21	0.07	1.28	3.03	9.18	0.62
15	2007	37	320	1.34	2.97	4.31		1.21	0.08	1.29	3.02	9.73	0.55
16	2008	37	320	1.34	2.97	4.31		1.21	0.23	1.44	2.87	10.20	0.47
17	2009	37	320	1.34	2.97	4.31		1.21	0.07	1.28	3.03	10.64	0.44
18	2010	37	320	1.34	2.97	4.31		1.21	0.08	1.29	3.02	11.03	0.39
19	2011	37	320	1.34	2.97	4.31		1.21	0.10	1.31	3.00	11.38	0.35
20	2012	37	320	1.34	2.97	4.31		1.21	0.07	1.28	3.03	11.70	0.31
21	2013	37	320	1.34	2.97	4.31		1.21	0.08	1.29	3.02	11.98	0.28
22	2014	37	320	1.34	2.97	4.31		1.21	0.42	1.63	2.68	12.20	0.22
23	2015	37	320	1.34	2.97	4.31		1.21	0.07	1.28	3.03	12.42	0.22
24	2016	37	320	1.34	2.97	4.31		1.21	0.08	1.29	3.02	12.62	0.20

IRR = 0.95378 PV= 1

ASSUMPTIONS:
1.THE PRODUCTION IS ADDITIONAL PRODUCTION RESULTING FROM THE INVESTMENT.
2.ELECTRICITY PRICE $35.90/MWeH.
3.HEAT PRICE $9.29/Gcal.
4.INVESTMENTS ARE IN CONSTANT 1993 PRICES AND INCLUDE CONTINGENCIES,INTEREST DURING CONSTRUCTION.
5.THE FUEL ESTIMATE IS FOR ADDITIONAL FUEL CONSUMPTION.
6.FUTURE ESCALATION,INTEREST ON LOANS,CLIENT OR OWNER COSTS ARE NOT INCLUDED IN THIS ANALYSIS.
7.EXCHANGE RATE US$1 = 780LEI.
8.FOR OPTION IB-ROMANIAN SUPPLY.

157

TABLE VII-7

JOB# 1060 ROMANIA PROJECT K & M ENGINEERING & CONSULTING CORPORATION

REHABILITATED POWER PLANTS RATE OF RETURN ESTIMATE PRICED: MAHYLIS
GRIRO DATE: 30-Aug-93

ITEM#	DESCRIPTION	PRODUCTION ELECTRIC (GWH)	PRODUCTION HEAT (Tcal)	BENEFITS-SALES ELECTRIC ($MILL)	BENEFITS-SALES HEAT ($MILL)	BENEFITS-SALES TOTAL ($MILL)	COSTS INVEST. ($MILL)	COSTS FUEL ($MILL)	COSTS O&M ($MILL)	COSTS TOTAL ($MILL)	NET BENEFITS ($MILL)	PRESENT VALUES CUMUL. ($MILL)	PRESENT VALUES YEARLY ($MILL)
01	1993												
02	1994												
03	1995						1.17			1.17	-1.17	-0.83	-0.83
04	1996						3.51			3.51	-3.51	-3.06	-2.23
05	1997	37	320	1.34	2.97	4.31		1.21	0.07	1.28	3.03	-1.34	1.72
06	1998	37	320	1.34	2.97	4.31		1.21	0.08	1.29	3.02	0.18	1.53
07	1999	37	320	1.34	2.97	4.31		1.21	0.10	1.31	3.00	1.54	1.36
08	2000	37	320	1.34	2.97	4.31		1.21	0.07	1.28	3.03	2.76	1.22
09	2001	37	320	1.34	2.97	4.31		1.21	0.08	1.29	3.02	3.85	1.09
10	2002	37	320	1.34	2.97	4.31		1.21	0.17	1.38	2.93	4.80	0.94
11	2003	37	320	1.34	2.97	4.31		1.21	0.07	1.28	3.03	5.67	0.87
12	2004	37	320	1.34	2.97	4.31		1.21	0.08	1.29	3.02	6.44	0.77
13	2005	37	320	1.34	2.97	4.31		1.21	0.10	1.31	3.00	7.13	0.69
14	2006	37	320	1.34	2.97	4.31		1.21	0.07	1.28	3.03	7.75	0.62
15	2007	37	320	1.34	2.97	4.31		1.21	0.08	1.29	3.02	8.30	0.55
16	2008	37	320	1.34	2.97	4.31		1.21	0.23	1.44	2.87	8.77	0.47
17	2009	37	320	1.34	2.97	4.31		1.21	0.07	1.28	3.03	9.21	0.44
18	2010	37	320	1.34	2.97	4.31		1.21	0.08	1.29	3.02	9.60	0.39
19	2011	37	320	1.34	2.97	4.31		1.21	0.10	1.31	3.00	9.95	0.35
20	2012	37	320	1.34	2.97	4.31		1.21	0.07	1.28	3.03	10.26	0.31
21	2013	37	320	1.34	2.97	4.31		1.21	0.08	1.29	3.02	10.54	0.28
22	2014	37	320	1.34	2.97	4.31		1.21	0.42	1.63	2.68	10.77	0.22
23	2015	37	320	1.34	2.97	4.31		1.21	0.07	1.28	3.03	10.99	0.22
24	2016	37	320	1.34	2.97	4.31		1.21	0.08	1.29	3.02	11.19	0.20

IRR = 0.56477 PV= 0

ASSUMPTIONS:
1.THE PRODUCTION IS ADDITIONAL PRODUCTION RESULTING FROM THE INVESTMENT.
2.ELECTRICITY PRICE $35.90/MWeH.
3.HEAT PRICE $9.29/Gcal.
4.INVESTMENTS ARE IN CONSTANT 1993 PRICES AND INCLUDE CONTINGENCIES,INTEREST DURING CONSTRUCTION.
5.THE FUEL ESTIMATE IS FOR ADDITIONAL FUEL CONSUMPTION.
6.FUTURE ESCALATION,INTEREST ON LOANS,CLIENT OR OWNER COSTS ARE NOT INCLUDED IN THIS ANALYSIS.
7.EXCHANGE RATE US$1 = 780LEI.
8.FOR OPTION IB-INTERNATIONAL SUPPLY.

TABLE VII-7

JOB# 1060 ROMANIA PROJECT — K & M ENGINEERING & CONSULTING CORPORATION

REHABILITATED POWER PLANTS — RATE OF RETURN ESTIMATE — PRICED: MAHYLIS

GRIRO — DATE: 30-Aug-93

ITEM#	DESCRIPTION	PRODUCTION ELECTRIC (GWH)	PRODUCTION HEAT (Tcal)	BENEFITS-SALES ELECTRIC ($MILL)	BENEFITS-SALES HEAT ($MILL)	BENEFITS-SALES TOTAL ($MILL)	COSTS INVEST. ($MILL)	COSTS FUEL ($MILL)	COSTS O&M ($MILL)	COSTS TOTAL ($MILL)	NET BENEFITS ($MILL)	PRESENT VALUES CUMUL. ($MILL)	PRESENT VALUES YEARLY ($MILL)
01	1993												
02	1994												
03	1995						1.39			1.39	-1.39	-0.99	-0.99
04	1996						4.16			4.16	-4.16	-3.63	-2.64
05	1997	122	320	4.38	2.97	7.35		3.90	0.09	3.99	3.36	-1.72	1.91
06	1998	122	320	4.38	2.97	7.35		3.90	0.09	3.99	3.36	-0.01	1.70
07	1999	122	320	4.38	2.97	7.35		3.90	0.22	4.12	3.23	1.45	1.46
08	2000	122	320	4.38	2.97	7.35		3.90	0.09	3.99	3.36	2.81	1.36
09	2001	122	320	4.38	2.97	7.35		3.90	0.09	3.99	3.36	4.02	1.21
10	2002	122	320	4.38	2.97	7.35		3.90	0.35	4.25	3.10	5.02	1.00
11	2003	122	320	4.38	2.97	7.35		3.90	0.09	3.99	3.36	5.99	0.97
12	2004	122	320	4.38	2.97	7.35		3.90	0.09	3.99	3.36	6.85	0.86
13	2005	122	320	4.38	2.97	7.35		3.90	0.22	4.12	3.23	7.59	0.74
14	2006	122	320	4.38	2.97	7.35		3.90	0.09	3.99	3.36	8.28	0.69
15	2007	122	320	4.38	2.97	7.35		3.90	0.09	3.99	3.36	8.89	0.61
16	2008	122	320	4.38	2.97	7.35		3.90	0.48	4.38	2.97	9.38	0.49
17	2009	122	320	4.38	2.97	7.35		3.90	0.09	3.99	3.36	9.87	0.49
18	2010	122	320	4.38	2.97	7.35		3.90	0.09	3.99	3.36	10.31	0.44
19	2011	122	320	4.38	2.97	7.35		3.90	0.22	4.12	3.23	10.68	0.38
20	2012	122	320	4.38	2.97	7.35		3.90	0.09	3.99	3.36	11.03	0.35
21	2013	122	320	4.38	2.97	7.35		3.90	0.09	3.99	3.36	11.34	0.31
22	2014	122	320	4.38	2.97	7.35		3.90	0.86	4.76	2.59	11.56	0.21
23	2015	122	320	4.38	2.97	7.35		3.90	0.09	3.99	3.36	11.80	0.25
24	2016	122	320	4.38	2.97	7.35		3.90	0.09	3.99	3.36	12.03	0.22

IRR = 0.53064 PV= 0

ASSUMPTIONS:
1.THE PRODUCTION IS ADDITIONAL PRODUCTION RESULTING FROM THE INVESTMENT.
2.ELECTRICITY PRICE $35.90/MWeH.
3.HEAT PRICE $9.29/Gcal.
4.INVESTMENTS ARE IN CONSTANT 1993 PRICES AND INCLUDE CONTINGENCIES,INTEREST DURING CONSTRUCTION.
5.THE FUEL ESTIMATE IS FOR ADDITIONAL FUEL CONSUMPTION.
6.FUTURE ESCALATION,INTEREST ON LOANS,CLIENT OR OWNER COSTS ARE NOT INCLUDED IN THIS ANALYSIS.
7.EXCHANGE RATE US$1 = 780LEI.
8.FOR OPTION II-ROMANIAN SUPPLY.

TABLE VII-7

JOB# 1060 ROMANIA PROJECT — K & M ENGINEERING & CONSULTING CORPORATION

REHABILITATED POWER PLANTS — RATE OF RETURN ESTIMATE — PRICED: MAHYLIS

GRIRO — DATE: 30-Aug-93

ITEM#	DESCRIPTION	PRODUCTION ELECTRIC (GWH)	PRODUCTION HEAT (Tcal)	BENEFITS-SALES ELECTRIC ($MILL)	BENEFITS-SALES HEAT ($MILL)	BENEFITS-SALES TOTAL ($MILL)	COSTS INVEST. ($MILL)	COSTS FUEL ($MILL)	COSTS O&M ($MILL)	COSTS TOTAL ($MILL)	NET BENEFITS ($MILL)	PRESENT VALUES CUMUL. ($MILL)	PRESENT VALUES YEARLY ($MILL)
01	1993												
02	1994												
03	1995						3.17			3.17	-3.17	-2.26	-2.26
04	1996						9.51			9.51	-9.51	-8.30	-6.04
05	1997	122	320	4.38	2.97	7.35		3.90	0.09	3.99	3.36	-6.39	1.91
06	1998	122	320	4.38	2.97	7.35		3.90	0.09	3.99	3.36	-4.69	1.70
07	1999	122	320	4.38	2.97	7.35		3.90	0.22	4.12	3.23	-3.22	1.46
08	2000	122	320	4.38	2.97	7.35		3.90	0.09	3.99	3.36	-1.87	1.36
09	2001	122	320	4.38	2.97	7.35		3.90	0.09	3.99	3.36	-0.65	1.21
10	2002	122	320	4.38	2.97	7.35		3.90	0.35	4.25	3.10	0.35	1.00
11	2003	122	320	4.38	2.97	7.35		3.90	0.09	3.99	3.36	1.31	0.97
12	2004	122	320	4.38	2.97	7.35		3.90	0.09	3.99	3.36	2.18	0.86
13	2005	122	320	4.38	2.97	7.35		3.90	0.22	4.12	3.23	2.92	0.74
14	2006	122	320	4.38	2.97	7.35		3.90	0.09	3.99	3.36	3.61	0.69
15	2007	122	320	4.38	2.97	7.35		3.90	0.09	3.99	3.36	4.22	0.61
16	2008	122	320	4.38	2.97	7.35		3.90	0.48	4.38	2.97	4.70	0.49
17	2009	122	320	4.38	2.97	7.35		3.90	0.09	3.99	3.36	5.19	0.49
18	2010	122	320	4.38	2.97	7.35		3.90	0.09	3.99	3.36	5.63	0.44
19	2011	122	320	4.38	2.97	7.35		3.90	0.22	4.12	3.23	6.01	0.38
20	2012	122	320	4.38	2.97	7.35		3.90	0.09	3.99	3.36	6.36	0.35
21	2013	122	320	4.38	2.97	7.35		3.90	0.09	3.99	3.36	6.67	0.31
22	2014	122	320	4.38	2.97	7.35		3.90	0.86	4.76	2.59	6.88	0.21
23	2015	122	320	4.38	2.97	7.35		3.90	0.09	3.99	3.36	7.13	0.25
24	2016	122	320	4.38	2.97	7.35		3.90	0.09	3.99	3.36	7.35	0.22

IRR = 0.24312 PV= 0

ASSUMPTIONS:
1.THE PRODUCTION IS ADDITIONAL PRODUCTION RESULTING FROM THE INVESTMENT.
2.ELECTRICITY PRICE $35.90/MWeH.
3.HEAT PRICE $9.29/Gcal.
4.INVESTMENTS ARE IN CONSTANT 1993 PRICES AND INCLUDE CONTINGENCIES,INTEREST DURING CONSTRUCTION.
5.THE FUEL ESTIMATE IS FOR ADDITIONAL FUEL CONSUMPTION.
6.FUTURE ESCALATION,INTEREST ON LOANS,CLIENT OR OWNER COSTS ARE NOT INCLUDED IN THIS ANALYSIS.
7.EXCHANGE RATE US$1 = 780LEI.
8.FOR OPTION II-INTERNATIONAL SUPPLY.

TABLE VII-7

JOB# 1060 ROMANIA PROJECT K & M ENGINEERING & CONSULTING CORPORATION

REHABILITATED POWER PLANTS RATE OF RETURN ESTIMATE PRICED: MAHYLIS
GRIRO DATE: 30-Aug-93

ITEM#	DESCRIPTION	PRODUCTION ELECTRIC (GWH)	PRODUCTION HEAT (Tcal)	BENEFITS-SALES ELECTRIC ($MILL)	BENEFITS-SALES HEAT ($MILL)	BENEFITS-SALES TOTAL ($MILL)	COSTS INVEST. ($MILL)	COSTS FUEL ($MILL)	COSTS O&M ($MILL)	COSTS TOTAL ($MILL)	NET BENEFITS ($MILL)	PRESENT VALUES CUMUL. ($MILL)	PRESENT VALUES YEARLY ($MILL)
01	1993												
02	1994												
03	1995						5.67			5.67	-5.67	-5.06	-5.06
04	1996						9.45			9.45	-9.45	-12.60	-7.53
05	1997						22.68			22.68	-22.68	-28.74	-16.14
06	1998	492	320	17.68	2.97	20.65		8.26	1.23	9.49	11.16	-21.65	7.09
07	1999	492	320	17.68	2.97	20.65		8.26	1.23	9.49	11.16	-15.31	6.33
08	2000	492	320	17.68	2.97	20.65		8.26	1.23	9.49	11.16	-9.66	5.65
09	2001	492	320	17.68	2.97	20.65		8.26	1.23	9.49	11.16	-4.61	5.05
10	2002	492	320	17.68	2.97	20.65		8.26	1.90	10.16	10.49	-0.38	4.24
11	2003	492	320	17.68	2.97	20.65		8.26	1.23	9.49	11.16	3.65	4.02
12	2004	492	320	17.68	2.97	20.65		8.26	1.23	9.49	11.16	7.24	3.59
13	2005	492	320	17.68	2.97	20.65		8.26	1.23	9.49	11.16	10.45	3.21
14	2006	492	320	17.68	2.97	20.65		8.26	1.23	9.49	11.16	13.31	2.86
15	2007	492	320	17.68	2.97	20.65		8.26	1.23	9.49	11.16	15.87	2.56
16	2008	492	320	17.68	2.97	20.65		8.26	2.54	10.80	9.85	17.89	2.02
17	2009	492	320	17.68	2.97	20.65		8.26	1.23	9.49	11.16	19.92	2.04
18	2010	492	320	17.68	2.97	20.65		8.26	1.23	9.49	11.16	21.74	1.82
19	2011	492	320	17.68	2.97	20.65		8.26	1.23	9.49	11.16	23.37	1.63
20	2012	492	320	17.68	2.97	20.65		8.26	1.23	9.49	11.16	24.82	1.45
21	2013	492	320	17.68	2.97	20.65		8.26	1.23	9.49	11.16	26.12	1.30
22	2014	492	320	17.68	2.97	20.65		8.26	1.23	9.49	11.16	27.27	1.16
23	2015	492	320	17.68	2.97	20.65		8.26	4.46	12.72	7.93	28.01	0.73
24	2016	492	320	17.68	2.97	20.65		8.26	1.23	9.49	11.16	28.93	0.92
25	2017	492	320	17.68	2.97	20.65		8.26	1.23	9.49	11.16	29.75	0.82

IRR = 0.25203 PV= 0

ASSUMPTIONS:
1.THE PRODUCTION IS ADDITIONAL PRODUCTION RESULTING FROM THE INVESTMENT.
2.ELECTRICITY PRICE $35.90/MWeH.
3.HEAT PRICE $9.29/Gcal.
4.INVESTMENTS ARE IN CONSTANT 1993 PRICES AND INCLUDE CONTINGENCIES,INTEREST DURING CONSTRUCTION.
5.THE FUEL ESTIMATE IS FOR ADDITIONAL FUEL CONSUMPTION.
6.FUTURE ESCALATION,INTEREST ON LOANS,CLIENT OR OWNER COSTS ARE NOT INCLUDED IN THIS ANALYSIS.
7.EXCHANGE RATE US$1 = 780LEI.
8.FOR OPTION IIIA-ROMANIAN SUPPLY.

TABLE VII-7

JOB# 1060 ROMANIA PROJECT — K & M ENGINEERING & CONSULTING CORPORATION

REHABILITATED POWER PLANTS — RATE OF RETURN ESTIMATE — PRICED: MAHYLIS

GRIRO — DATE: 30-Aug-93

ITEM#	DESCRIPTION	PRODUCTION ELECTRIC (GWH)	PRODUCTION HEAT (Tcal)	BENEFITS-SALES ELECTRIC ($MILL)	BENEFITS-SALES HEAT ($MILL)	BENEFITS-SALES TOTAL ($MILL)	COSTS INVEST. ($MILL)	COSTS FUEL ($MILL)	COSTS O&M ($MILL)	COSTS TOTAL ($MILL)	NET BENEFITS ($MILL)	PRESENT VALUES CUMUL. ($MILL)	PRESENT VALUES YEARLY ($MILL)
01	1993												
02	1994												
03	1995						6.29			6.29	-6.29	-5.61	-5.61
04	1996						10.48			10.48	-10.48	-13.96	-8.35
05	1997						25.14			25.14	-25.14	-31.86	-17.89
06	1998	492	320	17.68	2.97	20.65		8.26	1.23	9.49	11.16	-24.76	7.09
07	1999	492	320	17.68	2.97	20.65		8.26	1.23	9.49	11.16	-18.43	6.33
08	2000	492	320	17.68	2.97	20.65		8.26	1.23	9.49	11.16	-12.78	5.65
09	2001	492	320	17.68	2.97	20.65		8.26	1.23	9.49	11.16	-7.73	5.05
10	2002	492	320	17.68	2.97	20.65		8.26	1.90	10.16	10.49	-3.49	4.24
11	2003	492	320	17.68	2.97	20.65		8.26	1.23	9.49	11.16	0.53	4.02
12	2004	492	320	17.68	2.97	20.65		8.26	1.23	9.49	11.16	4.12	3.59
13	2005	492	320	17.68	2.97	20.65		8.26	1.23	9.49	11.16	7.33	3.21
14	2006	492	320	17.68	2.97	20.65		8.26	1.23	9.49	11.16	10.20	2.86
15	2007	492	320	17.68	2.97	20.65		8.26	1.23	9.49	11.16	12.75	2.56
16	2008	492	320	17.68	2.97	20.65		8.26	2.54	10.80	9.85	14.77	2.02
17	2009	492	320	17.68	2.97	20.65		8.26	1.23	9.49	11.16	16.81	2.04
18	2010	492	320	17.68	2.97	20.65		8.26	1.23	9.49	11.16	18.63	1.82
19	2011	492	320	17.68	2.97	20.65		8.26	1.23	9.49	11.16	20.25	1.63
20	2012	492	320	17.68	2.97	20.65		8.26	1.23	9.49	11.16	21.70	1.45
21	2013	492	320	17.68	2.97	20.65		8.26	1.23	9.49	11.16	23.00	1.30
22	2014	492	320	17.68	2.97	20.65		8.26	1.23	9.49	11.16	24.16	1.16
23	2015	492	320	17.68	2.97	20.65		8.26	4.46	12.72	7.93	24.89	0.73
24	2016	492	320	17.68	2.97	20.65		8.26	1.23	9.49	11.16	25.81	0.92
25	2017	492	320	17.68	2.97	20.65		8.26	1.23	9.49	11.16	26.64	0.82

IRR = 0.22892 PV= 0

ASSUMPTIONS:
1.THE PRODUCTION IS ADDITIONAL PRODUCTION RESULTING FROM THE INVESTMENT.
2.ELECTRICITY PRICE $35.90/MWeH.
3.HEAT PRICE $9.29/Gcal.
4.INVESTMENTS ARE IN CONSTANT 1993 PRICES AND INCLUDE CONTINGENCIES,INTEREST DURING CONSTRUCTION.
5.THE FUEL ESTIMATE IS FOR ADDITIONAL FUEL CONSUMPTION.
6.FUTURE ESCALATION,INTEREST ON LOANS,CLIENT OR OWNER COSTS ARE NOT INCLUDED IN THIS ANALYSIS.
7.EXCHANGE RATE US$1 = 780LEI.
8.FOR OPTION IIIA-INTERNATIONAL SUPPLY.

TABLE VII-7

JOB# 1060 ROMANIA PROJECT — K & M ENGINEERING & CONSULTING CORPORATION

REHABILITATED POWER PLANTS — RATE OF RETURN ESTIMATE — PRICED: MAHYLIS

GRIRO — DATE: 30-Aug-93

ITEM#	DESCRIPTION	PRODUCTION ELECTRIC (GWH)	PRODUCTION HEAT (Tcal)	BENEFITS-SALES ELECTRIC ($MILL)	BENEFITS-SALES HEAT ($MILL)	BENEFITS-SALES TOTAL ($MILL)	COSTS INVEST. ($MILL)	COSTS FUEL ($MILL)	COSTS O&M ($MILL)	COSTS TOTAL ($MILL)	NET BENEFITS ($MILL)	PRESENT CUMUL. ($MILL)	VALUES YEARLY ($MILL)
01	1993												
02	1994												
03	1995						6.35			6.35	-6.35	-5.67	-5.67
04	1996						10.59			10.59	-10.59	-14.12	-8.44
05	1997						25.42			25.42	-25.42	-32.21	-18.09
06	1998	395	320	14.19	2.97	17.17		7.33	1.42	8.75	8.42	-26.86	5.35
07	1999	395	320	14.19	2.97	17.17		7.33	1.42	8.75	8.42	-22.08	4.78
08	2000	395	320	14.19	2.97	17.17		7.33	1.42	8.75	8.42	-17.82	4.26
09	2001	395	320	14.19	2.97	17.17		7.33	1.42	8.75	8.42	-14.01	3.81
10	2002	395	320	14.19	2.97	17.17		7.33	1.42	8.75	8.42	-10.61	3.40
11	2003	395	320	14.19	2.97	17.17		7.33	1.99	9.32	7.85	-7.78	2.83
12	2004	395	320	14.19	2.97	17.17		7.33	1.42	8.75	8.42	-5.07	2.71
13	2005	395	320	14.19	2.97	17.17		7.33	1.42	8.75	8.42	-2.65	2.42
14	2006	395	320	14.19	2.97	17.17		7.33	1.42	8.75	8.42	-0.49	2.16
15	2007	395	320	14.19	2.97	17.17		7.33	1.42	8.75	8.42	1.44	1.93
16	2008	395	320	14.19	2.97	17.17		7.33	1.42	8.75	8.42	3.16	1.72
17	2009	395	320	14.19	2.97	17.17		7.33	2.63	9.96	7.21	4.48	1.32
18	2010	395	320	14.19	2.97	17.17		7.33	1.42	8.75	8.42	5.85	1.37
19	2011	395	320	14.19	2.97	17.17		7.33	1.42	8.75	8.42	7.08	1.23
20	2012	395	320	14.19	2.97	17.17		7.33	1.42	8.75	8.42	8.17	1.09
21	2013	395	320	14.19	2.97	17.17		7.33	1.42	8.75	8.42	9.15	0.98
22	2014	395	320	14.19	2.97	17.17		7.33	1.42	8.75	8.42	10.02	0.87
23	2015	395	320	14.19	2.97	17.17		7.33	4.56	11.89	5.28	10.51	0.49
24	2016	395	320	14.19	2.97	17.17		7.33	1.42	8.75	8.42	11.21	0.70
25	2017	395	320	14.19	2.97	17.17		7.33	1.42	8.75	8.42	11.83	0.62

IRR = 0.17105 PV= 0

ASSUMPTIONS:
1.THE PRODUCTION IS ADDITIONAL PRODUCTION RESULTING FROM THE INVESTMENT.
2.ELECTRICITY PRICE $35.90/MWeH.
3.HEAT PRICE $9.29/Gcal.
4.INVESTMENTS ARE IN CONSTANT 1993 PRICES AND INCLUDE CONTINGENCIES,INTEREST DURING CONSTRUCTION.
5.THE FUEL ESTIMATE IS FOR ADDITIONAL FUEL CONSUMPTION.
6.FUTURE ESCALATION,INTEREST ON LOANS,CLIENT OR OWNER COSTS ARE NOT INCLUDED IN THIS ANALYSIS.
7.EXCHANGE RATE US$1 = 780LEI.
8.FOR OPTION IIIB-ROMANIAN SUPPLY.

TABLE VII-7

JOB# 1060 ROMANIA PROJECT K & M ENGINEERING & CONSULTING CORPORATION

REHABILITATED POWER PLANTS RATE OF RETURN ESTIMATE PRICED: MAHYLIS
GRIRO DATE: 30-Aug-93

ITEM#	DESCRIPTION	PRODUCTION ELECTRIC (GWH)	PRODUCTION HEAT (Tcal)	BENEFITS-SALES ELECTRIC ($MILL)	BENEFITS-SALES HEAT ($MILL)	BENEFITS-SALES TOTAL ($MILL)	COSTS INVEST. ($MILL)	COSTS FUEL ($MILL)	COSTS O&M ($MILL)	COSTS TOTAL ($MILL)	NET BENEFITS ($MILL)	PRESENT CUMUL. ($MILL)	VALUES YEARLY ($MILL)
01	1993												
02	1994												
03	1995						6.70			6.70	-6.70	-5.98	-5.98
04	1996						11.62			11.62	-11.62	-15.24	-9.26
05	1997						27.88			27.88	-27.88	-35.08	-19.84
06	1998	395	320	14.19	2.97	17.17		7.33	1.42	8.75	8.42	-29.73	5.35
07	1999	395	320	14.19	2.97	17.17		7.33	1.42	8.75	8.42	-24.95	4.78
08	2000	395	320	14.19	2.97	17.17		7.33	1.42	8.75	8.42	-20.69	4.26
09	2001	395	320	14.19	2.97	17.17		7.33	1.42	8.75	8.42	-16.88	3.81
10	2002	395	320	14.19	2.97	17.17		7.33	1.42	8.75	8.42	-13.48	3.40
11	2003	395	320	14.19	2.97	17.17		7.33	1.99	9.32	7.85	-10.65	2.83
12	2004	395	320	14.19	2.97	17.17		7.33	1.42	8.75	8.42	-7.94	2.71
13	2005	395	320	14.19	2.97	17.17		7.33	1.42	8.75	8.42	-5.52	2.42
14	2006	395	320	14.19	2.97	17.17		7.33	1.42	8.75	8.42	-3.36	2.16
15	2007	395	320	14.19	2.97	17.17		7.33	1.42	8.75	8.42	-1.43	1.93
16	2008	395	320	14.19	2.97	17.17		7.33	1.42	8.75	8.42	0.29	1.72
17	2009	395	320	14.19	2.97	17.17		7.33	2.63	9.96	7.21	1.61	1.32
18	2010	395	320	14.19	2.97	17.17		7.33	1.42	8.75	8.42	2.98	1.37
19	2011	395	320	14.19	2.97	17.17		7.33	1.42	8.75	8.42	4.21	1.23
20	2012	395	320	14.19	2.97	17.17		7.33	1.42	8.75	8.42	5.30	1.09
21	2013	395	320	14.19	2.97	17.17		7.33	1.42	8.75	8.42	6.28	0.98
22	2014	395	320	14.19	2.97	17.17		7.33	1.42	8.75	8.42	7.15	0.87
23	2015	395	320	14.19	2.97	17.17		7.33	4.56	11.89	5.28	7.64	0.49
24	2016	395	320	14.19	2.97	17.17		7.33	1.42	8.75	8.42	8.33	0.70
25	2017	395	320	14.19	2.97	17.17		7.33	1.42	8.75	8.42	8.95	0.62

IRR = 0.15618 PV= 0

ASSUMPTIONS:
1.THE PRODUCTION IS ADDITIONAL PRODUCTION RESULTING FROM THE INVESTMENT.
2.ELECTRICITY PRICE $35.90/MWeH.
3.HEAT PRICE $9.29/Gcal.
4.INVESTMENTS ARE IN CONSTANT 1993 PRICES AND INCLUDE CONTINGENCIES,INTEREST DURING CONSTRUCTION.
5.THE FUEL ESTIMATE IS FOR ADDITIONAL FUEL CONSUMPTION.
6.FUTURE ESCALATION,INTEREST ON LOANS,CLIENT OR OWNER COSTS ARE NOT INCLUDED IN THIS ANALYSIS.
7.EXCHANGE RATE US$1 = 780LEI.
8.FOR OPTION IIIB-INTERNATIONAL SUPPLY.

OPTION 1A

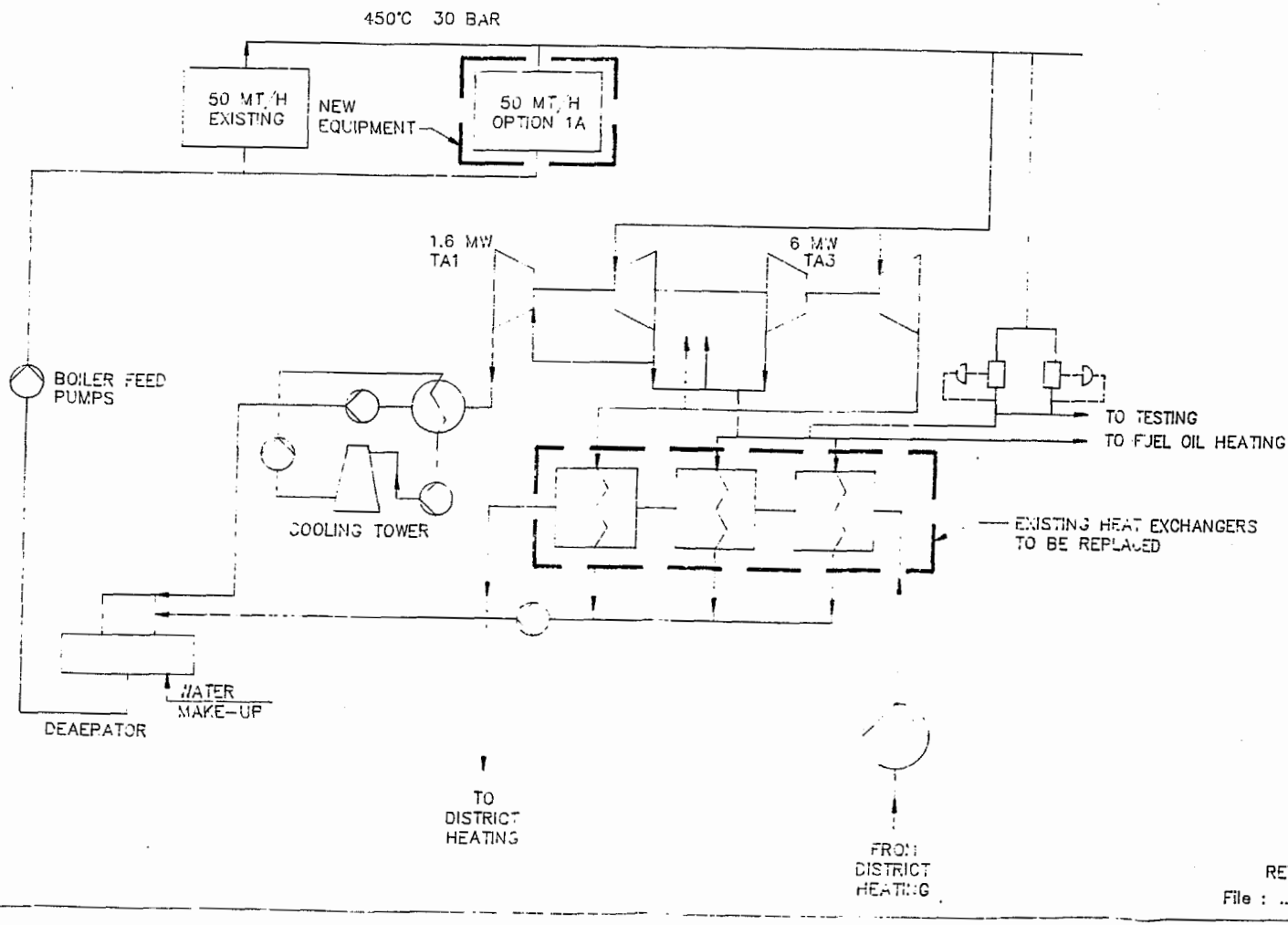

SKETCH 1-A

REVISION A – 9/3/93

File : ...\1060\1060_1A.DWG

OPTION 1B

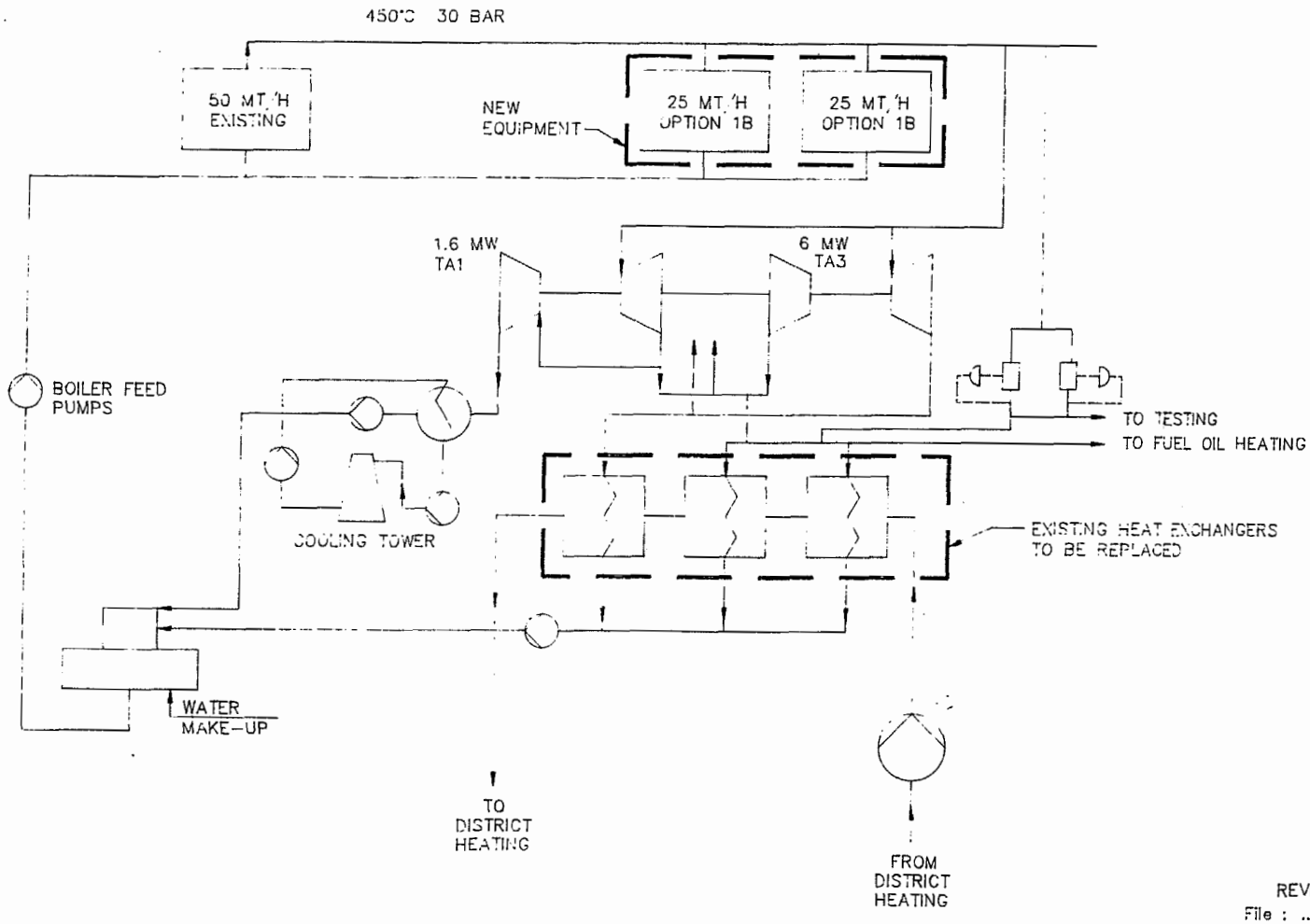

SKETCH 1-B

REVISION A – 9/3/93

File : ...\1060\1060_1B.DWG

OPTION Ii

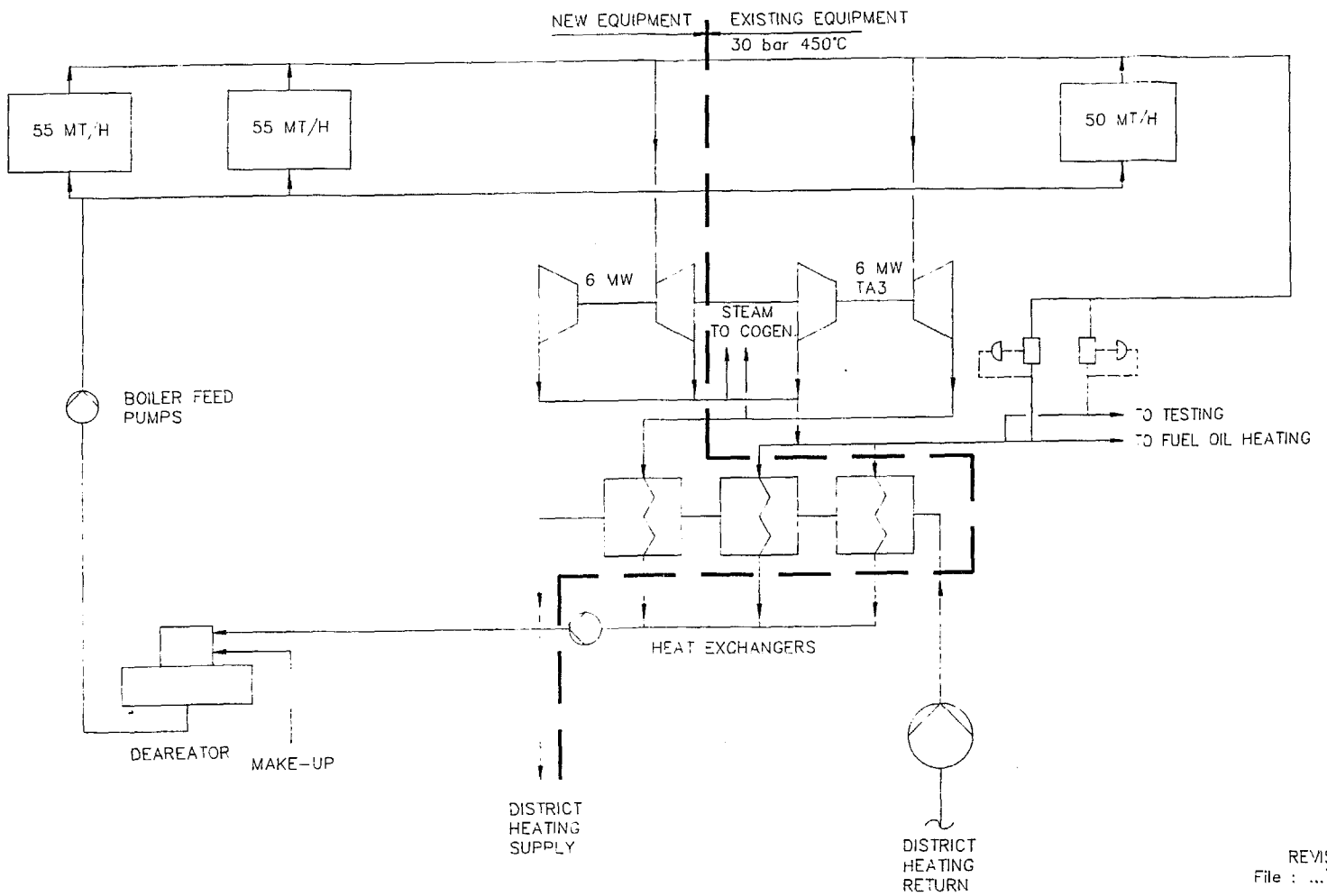

SKETCH Ii

REVISION A – 9/3/93
File : ...\106C\1060_2A.DWG

BEST AVAILABLE COPY

OPTION IIIA

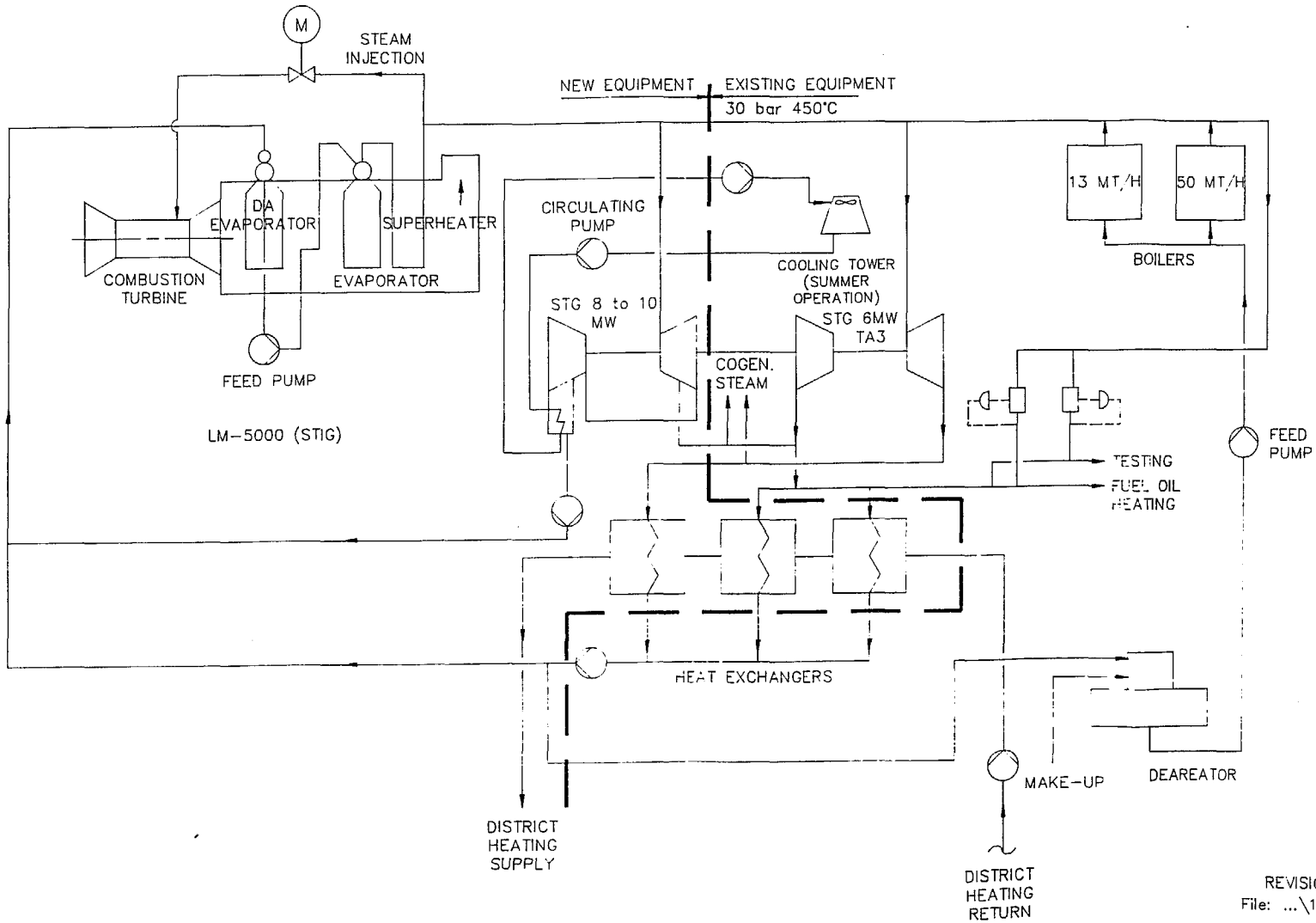

SKETCH III A

REVISION A - 9/3/93
File: ...\1060\1060_3A.DWG

BEST AVAILABLE COPY

OPTION IIIB

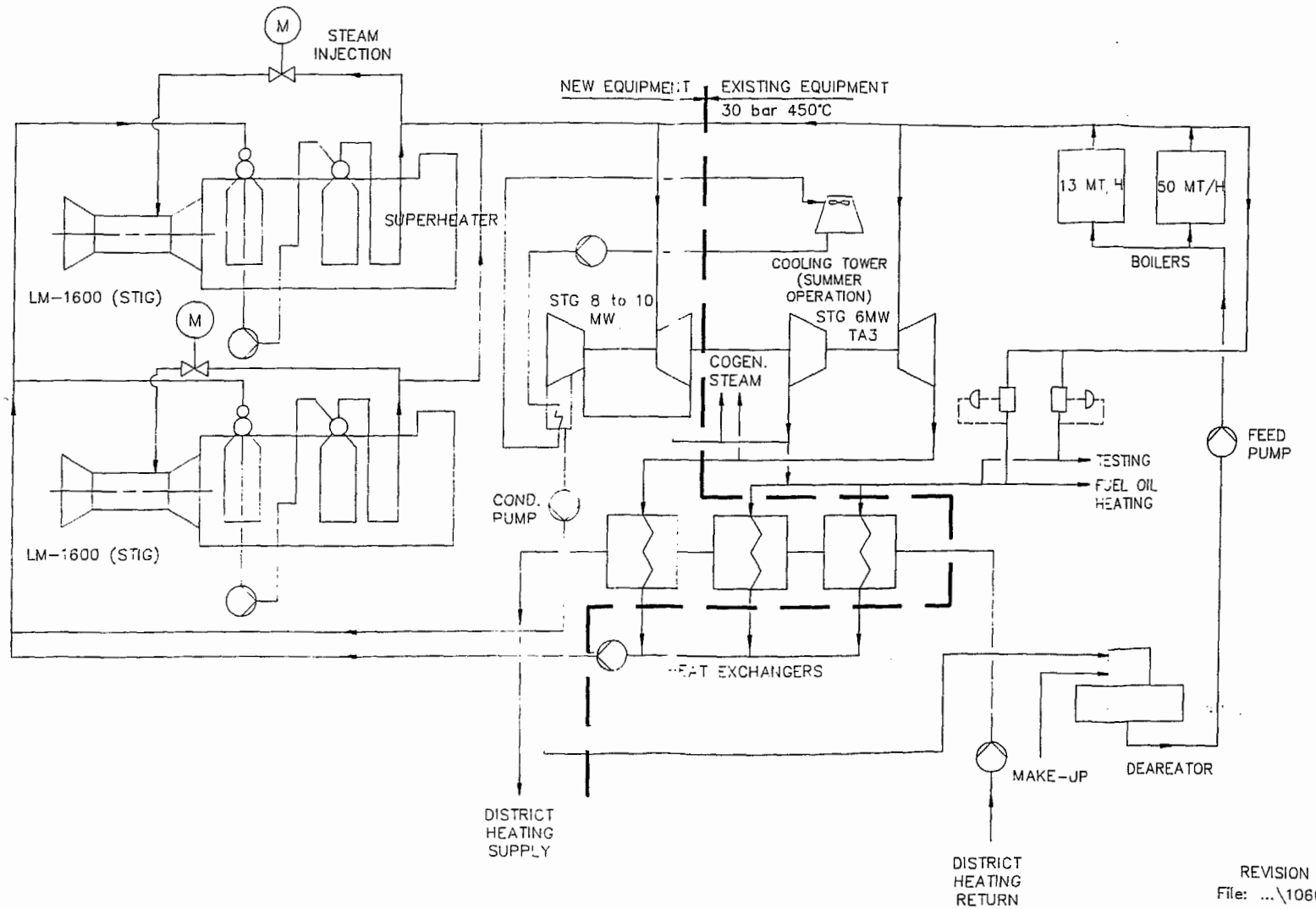

SKETCH IIIB

REVISION A – 9/3/93
File: ...\1060\1060_3B.DWG

BEST AVAILABLE COPY

XI. LIST OF UNITED STATES MANUFACTURERS OF EQUIPMENT TO BE USED ON GRIRO REHABILITATION

1.0	**Combustion Turbines**	Telephone Number
	General Electric Company Albany, New York	800-626-2004
	Solar Turbines San Diego, California	619-544-5760
	Stewart & Stevenson Houston, Texas	713-868-7700
	Westinghouse Electric Co. Orlando, Florida	407-381-6864
2.0	**Heat Recovery Steam Generators**	
	Foster Wheeler Corp. Clinton, New Jersey	201-730-4000
	Deltak Corp. Minneapolis, Minnesota	612-557-7440
	Ametek Inc. Wilmington, Delaware	302-995-0400
	Entec Houston, Texas	713-961-9061
3.0	**Steam Turbines**	
	General Electric Co. Albany, New York	800-626-2004
	ABB Power Generation Inc. North Brunswick, New Jersey	201-932-6000
	Westinghouse Electric Co. Orlando, Florida	407-381-6864

4.0	**Condensers**	**Telephone No.**
	Foster Wheeler Corp. Clinton, New Jersey	201-730-4000
	Nash Engineering Norwalk, Connecticut	203-852-3724
	Nooter Corp. St. Louis, Missouri	314-621-6000
	Southwestern Engineering Co. Los Angeles, California	213-726-0641
5.0	**Pumps**	
	Ingersoll Rand. Co. Phillipsburg, New Jersey	201-859-7853
	IMO Industries Inc. Lawrenceville, New Jersey	609-890-5900
	Goulds Pumps Seneca Falls, New York	315-568-2811
	Dresser Industries Inc. Connersville, Indiana	317-827-9200
6.0	**Heat Exchangers**	
	Eastern Wheeler Corp. Clinton, New Jersey	201-730-4000
	Yuba Heat Transfer Corp. Audubon, Pennsylvania	215-666-9770

121

XII. ENVIRONMENTAL IMPACT OF ATMOSPHERIC RELEASE OF THE PROPOSED FACILITY

1.0 General

At this time there are no specific regulations in Romania to cover the environmental emissions of combustion turbines. The existing regulation issue in December 1979 does not address the Nitrogen Oxide (NOx) emissions to atmosphere. NOx is the most damaging environmental release from combustion turbines using gas or distillated oil.

In the absence of Romanian regulations limiting the NOx atmosphoric releases, for the purpose of this study, we have adopted as guidelines the European Community Directives (EC) assuming that any future Romanian environmental regulation for this type of installation will establish similar limits as the EC directives.

2.0 European Community Directives

EC Directives concerning ambient air quality.

2.1 Council directive of July 15, 1980 on Air Quality Limits values of guide values for sulfur dioxide and suspended particles. (BO/779/EC OJEC 30.8.80), L229/30)

Annex I to this Directive fixes limit values for sulphur dioxide and suspended particulate (smoke) in the atmosphere.

Table 2-1

LIMIT VALUES FOR SULPHUR DIOXIDE AND SUSPENDED PARTICULATES
(As measured by the black-smoke method)

Limit values for sulphur dioxide expressed in $\mu g/m^3$ with the associated values for suspended particulates (as measured by the black-smoke method(1) expressed in $\mu g/m^3$

Reference Period	Limit Value for Sulphur Dioxide	Associated Value for Suspended Particulates
Year	80 (median of daily mean values taken throughout the year)	>40 (median of daily mean values taken throughout the year)
	120 (median of daily mean values taken throughout the year)	≤40 (median of daily mean values taken throughout the year)
Winter (1 October to 31 March)	130 (median of daily mean values taken throughout the winter)	>60 (median of daily mean values taken throughout the winter)
	180 (median of daily mean values taken throughout the winter)	≤60 (median of daily mean values taken throughout the winter)
Year (made up of units of measuring periods of 24 hours)	250(2) (98 percentile of all daily mean values taken throughout the year)	>150 (98 percentile of all daily mean values taken throughout the year)
	350(2) (98 percentile of all daily mean values taken throughout the year)	≤150 (98 percentile of all daily mean values taken throughout the year)

(1) The results of the measurements of black smoke taken by the OECD method have been converted into gravimetric units as described by the OECD.

(2) Member States must take all appropriate steps to ensure that this value is not exceeded for more than three consecutive days. Moreover, Member States must endeavour to prevent and to reduce any such instances in which this value has been exceeded.

Table 2-2

Limit Values for Suspended Particulates (as measured by the black-smoke method [1]) expressed in $\mu g/m^3$

Reference Period	Limit Value for Suspended Particulates
Year	80 (median of daily mean values taken throughout the year)
Winter (1 October to 31 March)	130 (median of daily mean values taken throughout the winter)
Year (made up of units of measuring periods of 24 hours)	250[2] (98 percentile of all daily mean values taken throughout the year)

[1] The results of the measurements of black smoke taken by the OECD method have been converted into gravimetric units as described by the OECD.

[2] Member States must take all appropriate steps to ensure that this value is not exceeded for more than three consecutive days. Moreover, Member States must endeavour to prevent and to reduce any such instances in which this value has been exceeded.

2.2 Council Directive of 7 March 1985 on Air Quality Standards for Nitrogen Dioxide (85/203/EC OJEC 27.3.85, L87/1)

The Directive lays down limit values to protect human health (Annex I to the Directive) and stricter guide values to improve protection of human health and to protect the environment (Annex II) for nitrogen dioxide in air. It does not apply to occupational exposure or indoor air quality.

The limit value is 200 $\mu g/m^3$ (based on the 98th percentile of hourly mean values over the year) and has been applicable since 1 July 1987. The Member States must inform the EC of areas where this value is exceeded and draw up plans to meet the limit value "as rapidly as possible" and by 1 January 1994 at the latest. There are two guide values: a 50th percentile of 50 $\mu g/m^3$ and a 98th percentile of 135 $\mu g/m^3$, based on hourly mean values over the year.

Member States may set lower limit values in zones where there is a foreseeable increase in NO_2 from urban or industrial development. Lower guide values may be set in areas which are considered to need special environmental protection.

Member States must establish measuring stations in accordance with Annex III of the Directive, and report annually to the EC, supplying detailed information about NOx concentrations and abatement measures. Some specified information must be made available to the public as well. A reference method for analysis, based on chemiluminescence principles, is described in Annex IV of the Directive.

Measures taken under the Directive may not lead to a significant deterioration in air quality in zones where NOx pollution levels are low in relation to the limit values.

3.0 Atmospheric Releases of the New Facility

The NOx releases to atmosphere from a combustion turbine operating on gas or disfillated oil can be minimized by the use of water or steam injection into the high pressure section or in some cases on the low pressure section of the turbine, this feature has been incorporated in the design of the GRIRO facility for the preferred option to limit even more the NOx releases. During the summer operation, this will be the normal operating mode since in order to operate the unit at one hundred percent electrical load may be necessary to utilize this feature as a heat sink to use the extra steam generated by the heat recovery steam generator.

The use of additional duct firing in the heat recovery steam generator using fuel oil will introduce to the atmosphere additional pollutants. However, the additional duct firing planned for the GRIRO facility will be very limited, and it is expected to operate on fuel oil only during the 2 to 3 severe winter months when gas availability is limited. This limited use will reduce the environmental releases well within the established EC limits.

The use of gas for duct firing will reduce the release of sulfur dioxide and suspended particles to a minimum. During the summer, with a reduced heat demand the duct firing will not be in operation, it is anticipated that duct firing will be required only 6 months a year.

For projects using combustion turbines similar as the proposed configuration for the GRIRO facility, manufacturers have guaranteed the emission releases. The following table shows a comparison between the EC guidelines and the manufacturer guarantees using distillated oil for an aeroderivative combustion turbine without steam injection.

Pollutant	EC Guideline	Manufacturer (3)(1) Guarantee
NOx (ppm)	200	197
SOx ($\mu g/m^3$)	120	SO_2 - 86 - SO_3 5
Particulates $\mu g/m^3$	80(2)	0.0196

(1) 100% load ISO conditions
(2) Winter (median of daily value taken throughout the year)
(3) No steam or water injection

With steam injection using distillated oil, NOx emissions as low as 75 ppm have been guaranteed by manufacturers of these types of combustion turbines.

XIII. TRANSLATION OF ROMANIAN FOREIGN INVESTMENT LAW

XIII. ROMANIAN FOREIGN INVESTMENT LAW

This official translation of Romania's foreign investment law, which includes amendments adopted in June 1993 (3 EER 481, 7/5/93), was provided by the Romanian Development Agency, the Romanian government agency that registers and monitors foreign investment.

FOREIGN INVESTMENT LAW
No. 35/3 April 1991 *

(* Republished in Monitorul Oficial no. 185/1993 on the basis of Art. 2 of Law no. 57/1993 regarding amendment and completion of Law no. 35/1991 on foreign investments.)

The Parliament of Romania passes the present law. To induce foreign investment in Romania the present law is passed comprising provisions meant to confer foreign investors guarantees and incentives as well as the complete and unrestrained use of the results of their activity.

Chapter I General Provisions

Art.1. For purposes of this law, the term "Foreign Investment in Romania" shall mean:

a) establishment of new companies, subsidiaries and branches, either having wholly owned foreign capital or by association with Romanian legal or natural persons, with observance of Company Law no. 31 of 1990;

b) participation in the increase of registered capital of an existing company or the acquisition of shares or capital stock belonging to such companies, as well as bonds and other securities;

c) concession, leasing or management contracts, as provided for by the law, of businesses, public services, production subunits pertaining to autonomous state enterprises or to commercial companies;

d) acquisition of ownership rights over movable and immovable property as well as other real estate rights, except for the land ownership rights;

e) acquisition of industrial and intellectual property rights;

f) acquisition of personal estate rights or other rights related to services having economic value that are associated to an investment;

g) purchase of production spaces and other buildings, except for residence buildings not related to the investment, as well as the construction thereof;

h) participation agreements for exploration, exploitation and production sharing of natural resources.

Art.2. "Participation" of foreign investors in Romania may consist of:

a) funds in freely convertible currencies;

b) machinery, equipment, means of transport, components, spare parts and other goods;

c) services, industrial and intellectual property rights (patents, licenses, know-how, trademarks, copyrights), expertise and methods of organization and management;

d) revenues and profits derived from activities carried out in Romania, as well as goods and values acquired with observance of legal provisions, after payment of taxes and duties as set forth by the law.

Art.3. The term "Foreign investor" shall mean any natural or legal person residing or, as the case may be, having its domicile or headquarters abroad, and which is conducting investment in Romania under any of the forms set forth by this law.

Art.4. Foreign investments may be effected in all sectors of industry, exploration and production of natural resources, agriculture, infrastructure and communication, civil and industrial works, scientific research and technology development, trade, transportation, tourism, banking and insurance services and other services, provided that they shall not:

a) infringe the environment protection regulations in force;

b) affect Romania's national security and defense interests;

c) harm the public order, health and good morals.

Chapter II Guarantees

Art.5. The foreign investments in Romania shall not be nationalized, expropriated, requisitioned or subjected to other measures of like effects, except in public interest, with observance of the legal procedures set forth by the law and against payment of a compensation equivalent to the affected investment which shall be prompt, adequate and effective.

Art.6. The compensation shall be assessed in relation to the market value of the investment upon the date of occurrence of one of the acts set forth in Art.5.

Art.7. In case the compensation cannot be ascertained as provided in Art.6 herein above, then it shall be determined by the parties on equitable principles, taking into account the capital invested, its appreciation or depreciation and the current returns.

Art.8. Should the compensation determined as per Art.6 or Art.7 hereinabove not be satisfactory to the foreign investor, then it shall be established upon the foreign investor's request through the courts of law, in accordance with the legal provisions.

Art.9. The foreign investors shall enjoy the rights to:

a) participate in the management and administration of the investment, in keeping with the terms of the contracts and by-laws agreed upon;

b) assign their contractual rights and obligations to other Romanian or foreign investors;

c) integrally transfer abroad the annual profits they are entitled to, under the conditions of the Romanian foreign currency provisions, after payment of taxes, duties and other obligations as set forth by the Romanian legislation;

d) transfer abroad, in keeping with the provisions of the contracts concluded, the amounts collected for copyrights, technical assistance, expertise and other services;

e) transfer abroad the amounts obtained from the sale of shares, bonds and other securities as well as those derived from liquidation of investments, under the conditions of the Romanian foreign currency provisions;

f) transfer abroad in the agreed upon freely convertible currency the amounts achieved as compensation in the event of the occurrence of one of the actions provided in Art.5 hereinabove.

Art.10. The foreign investments effected in accordance with the provisions of this law enjoy the legal status set forth hereby for the whole duration of their existence to the extent a subsequent law shall not set forth more favourable provisions.

Art.11. The foreign investors shall enjoy the legal status set forth by this law irrespective of their citizenship or, as the case may be, nationality.

Chapter III Incentives

Art.12. Imported machinery, equipment, installations, means of transportation and any other outfits necessary for investment are exempt from import customs duties provided that such imported items represent the equity contribution in kind or are purchased from the equity cash contribution of the foreign investor to the registered capital of the company or to any increase thereof.

Art.13. The raw materials, consummables, spare parts and other supplies, necessary for and effectively used by the foreign investor for its own production purposes are exempt from import customs duties for a period of 2 years, counted from the date the project is commissioned or, as the case may be, from the date of commencing the activity depending on the legal status of the foreign investment.

Art.14. Foreign investments are exempt from payment of tax on profit as follows:

a) investments in industry, agriculture, construction sector, exploration and exploitation of natural resources for a period of five (5) years from commencing productive activity;

b) investments in communication and transports, for a period of three (3) years from commencing the respective operations;

c) investments in trade, tourism, banking and insurance services, as well as any other services, for a period of two (2) years from commencing the respective operations.

Foreign investments defined at Art.1., letter a) of this law shall benefit from the tax exemptions provided by Art.14 hereinabove on condition that the total contribution in kind and cash effectively disbursed by the foreign investor accounts for at least 20% of the registered capital but no less than US$10,000.

Foreign investments that do not meet these conditions shall be subject to the provisions of the common law.

Art.15. In addition to the exemptions provided for herein above, reductions of the tax on profits are further granted after the expiration of the initial tax holiday period, as follows:

a) a 50% reduction of the tax due for the profits reinvested in enterprises set up in Romania with a view to widening and upgrading the technical and material basis, improving the manufacturing technologies or expanding the activity, to obtain additional profits, as well as for the investments aimed at protection of the environment;

b) a 25% reduction of the tax due, provided that one of the following conditions is met:

— at least 50% of the necessary raw materials, energy and fuel are provided through importation;

— at least 50% of the products and services are exported;

— more than 10% of the expenditures are made for scientific research and development of new technologies in Romania and for professional training;

— at least 50% of the machinery and other equipment necessary for developing existing investments are obtained from domestic production;

— at least 50 (fifty) new jobs are created through a new investment or expansions of existing investments.

Art.16. For investments effected in the fields of particular interest for the national economy, on proposal of the Government, additional facilities can be granted by law.

Art.17. In case voluntary liquidation of foreign investments occurs within a time span shorter than twice the period for which foreign investors enjoy the exemptions provided for by Art.14 hereinabove, foreign investors shall pay the taxes on profits imposed by the law for the whole duration of the investment. The taxes due in accordance with the provisions of the above paragraph shall be paid with priority out of the results deriving from the liquidation of the investment or out of the other rights the foreign investors are entitled to.

Chapter IV Promotion and Registration of Foreign Investments

Art.18. Foreign investments in Romania, irrespective of their legal status, shall be made on the basis of an application by the foreign investor registered with the Romanian Development Agency.

Art.19. The Romanian Development Agency shall study the reliability of the investor, the field and the legal form of the investment and the amount of the capital to be invested.

Art.20. The Romanian Development Agency answers the applications of foreign investors on the basis of data and information that it has available or that it may obtain upon request from the central and local organization of public administration as well as from autonomous state enterprises and commercial companies in the field of activity where the foreign investment shall be made. The ministries and the other central and local organizations of public administration shall answer within 10 days to the request of the Romanian Development Agency.

Art.21. The Romanian Development Agency shall answer the applications of foreign investors within 30 days from their registration. In the event that no confirmation is received by the foreign investor during the time period set forth in the above paragraph, the investment shall be deemed to have been approved and may be implemented.

Art.22. The foreign investors have the right to effect investments under the conditions set forth in the Romanian law, either on the basis of the confirmation issued by the Romanian Development Agency, or on the basis of foreign investor's application in the absence of any response from the Agency.

Art.23. The status of foreign investor in Romania is proven by the "Certificate of Investor" issued by the Romanian Development Agency.

The "Certificate of Investor" shall be issued at the foreign investor's request within 15 (fifteen) days from registering the application, upon presentation of relevant documents — the contract of association and the statute, the commercial contracts and other legal papers drafted in accordance with the provisions of the Romanian law and taking into consideration the legal status of the investment.

The "Certificate of Investor" is opposable to the Romanian authorities for the establishment of the foreign investors' rights.

Chapter V Financial, Foreign Currency and Commercial Operations

Art.24. The collection and payment operations related to the foreign investments shall be effected through accounts opened with banks having the headquarters in Romania or abroad, in accordance with the regulations set forth by the National Bank of Romania. Commercial companies with foreign participation and foreign investors shall have the right to dispose of the amounts available in their own accounts. The commercial companies may keep in their own accounts the amounts in foreign currency deposited as equity contribution to the registered capital.

Art.25. The accounts shall be fed from the investors' financial contribution, contracted loans and revenues.

Art.26. Joint ventures and other foreign investors may contract credits in Lei or other currencies from local financing institutions or loans in freely convertible currencies from foreign banks and financial institutions.

Art.27. The activity of the joint ventures and of the foreign investors shall be carried out on the basis of commercial contracts concluded with the observance of the legal provisions, at agreed-upon prices.

Art.28. The payments in foreign currency, including the amounts due to the foreign investors, shall be effected from the amounts available in their own accounts or by purchasing foreign currency at the official exchange rate.

Art.29. The profits in freely convertible currency and in lei due to the foreign investors can be used to make new investments in Romania, to buy Romanian goods and services or they may be exchanged on the financial market with observance of the legal provisions.

Chapter VI Final Provisions

Art.30. In the event foreign investments in Romania are made by setting-up commercial companies in association with Romanian natural or legal persons, the contribution of the Romanian associates to the registered capital may consist of the right of property or other real rights over land or other immovable necessary estate for the whole duration of the joint venture.

Art.31. The expatriate personnel necessary to operate the foreign investment shall be agreed upon by the contracting parties or by the foreign investor, as

180

the case may be and may hold only management and expert positions.

Art.32. The wages of local and expatriate personnel employed for operating of the foreign investments shall be settled by the agreement of the parties.

Art.33. The provisions of this law shall be applied to the extent that the international agreements and arrangements of foreign investments undersigned by Romania do not provide otherwise.

Art.34. Upon coming into effect of this law the Decree no. 424 of 1972 ruling the establishment and functioning of joint venture in Romania, the Decree-Law no. 96 of 1990 for inducement of foreign investment in Romania, as well as any other contrary legal provisions, are abrogated.

181

XIV. FINAL COMMENTS AND CONCLUSIONS

1.0 Sequence of Events

Chapters I through XI of this report reflect the basis for the recommendations made by K&M Engineering and Consulting Corporation for the rehabilitation of the GRIRO Power Plant; these sections, in final draft form, were submitted to GRIRO for review and comments on September 1993. K&M personnel attended meetings in Budapest in early December 1993 with GRIRO management, power plant personnel and engineering consultants to review the September draft report and obtain GRIRO comments prior to issuing the final report.

2.0 GRIRO Review of Draft Report

GRIRO, in cooperation with their engineering consultant PCMG S.A. of Bucharest, had reviewed the draft report submitted by K&M and agreed with K&M's recommendation of installing a combined cycle power plant; this option will not only meet the present demand but will also provide for the forecasted increase in district heating demand and the sale of electricity (the largest amount of all of the options) to RENEL. However, after consulting with Ministry of Industry and other government authorities, the implementation of the recommended combined cycle power plant will be relegated to a future date due to the following reasons:

- Contrary to previous commitments of fuel availability for the combustion turbine, the Ministry of Industry, due to an increase in agricultural production, cannot guarantee the availability of fuel for year-round operation.

- After discussions with the Romanian government, GRIRO, at this time, cannot finance the proposed combined cycle power plant.

3.0 Option Selected by GRIRO

After reviewing the draft report and considering the technical and financial constraints, GRIRO has selected a variation of Option IB for implementation; this option considered the installation of two 25 Mt/h gas and oil fired boilers. GRIRO would like to install three 25 Mt/h gas and oil fired boilers, keeping the existing 50 MT/H boiler in service; this option will meet the present district heating demand with a small excess to meet some of the future forecasted demand, and, in addition, will permit the retirement of the existing 1.6 MW steam turbine and installation of a new 2.7 MW steam turbine. The installation of this new equipment in the GRIRO boiler room will allow sufficient space for the installation of the recommended combined cycle power plant at a future date.

4.0 Future Actions to Implement the GRIRO Selected Alternate Option

During the December, 1993 meetings, GRIRO requested cooperation from RCG/Hagler, Bailly Inc. and K&M Engineering and Consulting Corporation for implementation of the installation of the new 25 Mt/h boilers and the 2.7 MW steam turbine, including the following:

A. 25 Mt/h boilers are not currently manufactured in Romania. GRIRO would like to obtain a licensing agreement with an American boiler manufacturer to build some of the boiler components in their shop and erect the boilers.

The following boiler components are not manufactured in Romania and will have to be supplied by the American boiler manufacturer:

- membrane tubes
- burners
- instrumentation and controls
- insulation

Some of the heavy components such as boiler drums and piping will be manufactured in Romania.

GRIRO will need cooperation to select and establish contacts with American boiler manufacturers to implement the project concept. One possibility also discussed is that the licensing agreement can be extended to manufacturing boilers for sale in Romania and eastern Europe; a GRIRO survey indicates that there is a market for small boilers.

B. GRIRO will need engineering support to perform the thermal and financial analysis in the same detail as performed for the selected option in the draft report.

The steps needed to implement the option selected by GRIRO are outside the scope of this study; GRIRO plans to contact USAID to request additional support.

5.0 Possible Source of Financing

An order of magnitude estimate for the installation of the three 25 Mt/h boilers and the new 2.7 MW steam turbine is 7.0 million dollars. During the December, 1993 meetings in Bucharest, GRIRO stated that they are willing to finance 40% of the cost in lei; this amount should be sufficient to cover the Romanian supply, however, outside hard currency financing will be required for the 4.2 million dollars balance.

K&M met in Bucharest with Chemical Bank and the European Bank for Reconstruction and Development (EBRD) to review the possibility of obtaining the necessary hard currency financing for this modified option. According to these contact sources, 4.2 million dollar loan is considered to be a very small loan, and will be difficult to obtain, especially under present circumstances. The only possibility is to add this amount to a larger loan. In this regard, the EBRD is currently negotiating 125 million ECUs (1 ECU = $1.1299 as of 12/21/93) loan with the Bucharest City Hall to finance the upgrading of RADAT District Heating Facilities, and EBRD believes that it is still possible to add the 4.2 million dollars needed by GRIRO to the proposed RADAT loan. As RADAT will be the major beneficiary of the GRIRO facility upgrade, GRIRO should discuss this possibility with RADAT and the Bucharest City Hall.

UNITED STATES AGENCY FOR INTERNATIONAL DEVELOPMENT

REGIONAL EASTERN EUROPE ENERGY EFFICIENCY PROJECT- ROMANIA

ENERGY EFFICIENCY MARKET DEVELOPMENT

VOLUME I

ENERGY AUDIT ADVISORY REPORTS

Prepared by:

HAGLER BAILLY CONSULTING, INC.
1530 Wilson Boulevard
Suite 900
Arlington, VA 22209-2406
(703) 351-0300

185

ENERGY AUDIT ADVISORY REPORTS -ROMANIA

TABLE OF CONTENTS

	Introduction	
TAB 1	Borsa City Hospital	Laurent Pommier, Hagler Bailly Consulting, Inc.
TAB 2	Danubiana, S.A.	Laurent Pommier, Hagler Bailly Consulting, Inc.
TAB 3	Matizol, S.A.	Walt Smith, ETSI Consulting
TAB 4	Mobins, S.A.	Laurent Pommier, Hagler Bailly Consulting, Inc.
TAB 5	Muha, S.R.L.	Laurent Pommier, Hagler Bailly Consulting, Inc.
TAB 6	Stirom Glass Factory	Walt Smith, ETSI Consulting
TAB 7	Terapia, S.A.	Laurent Pommier, Hagler Bailly Consulting, Inc.
TAB 8	Timpur Noi	Laurent Pommier, Hagler Bailly Consulting, Inc.
TAB 9	Vega, S.A.	Laurent Pommier, Hagler Bailly Consulting, Inc.

1. INTRODUCTION

The Energy Efficiency Market Development (EEMD) project has been implemented in Bulgaria, Hungary and Romania as part of the USAID's Regional Energy Efficiency Project. Its primary objective has been to encourage the development of a market for an energy efficiency industry in these countries, and to foster the development and capabilities of local private firms to serve this market. This project has included training for private energy efficiency entrepreneurs, demonstration projects, and support to the development of technical and commercial ties between the US and Eastern Europe.

2. ACTIVITIES

2.1 Training of Energy Services Firms

Local private sector energy service companies went through a competitive selection process based on the criteria of entrepreneurial spirit and commitment to the private sector; interest in energy efficiency consulting; technical expertise; and, regional diversity. They were provided a 3-4 week training program which included topics of energy auditing, energy efficiency technology, industrial production quality programs, financial analysis and business practices for consultants. They were also administered the AEE Certified Energy Manager examination (CEM) by AEE representatives, and are now certified.

2.2 Energy Audits

The local CEMs marketed in each country their services to industrial companies. The USAID program then selected 8-10 plants in each country that had agreed to sign a contact with the local consultants and pay these consultants a market-based fee for an energy audit. The plant selection criteria also required the plants to be willing to cost-share the installed equipment, to provide installation and to make the results of the demonstration project available. Replicability of potential measures to other plants in the same industry and to other industries was also considered. Hagler Bailly consultants spent about one week in each plant to train the CEMs in energy auditing techniques, provide advice, and decide on a package of equipment for the demonstration projects. Assistance continued on subsequent visits to finalize the equipment specifications.

2.3 Demonstration Projects

Based in part on the recommendations of the energy audits, some projects were selected as demonstrations. Competitiveness was also part of the selection, based on a criteria including payback, replicability, and the ability to showcase US equipment. US-made energy efficiency equipment was provided to the participating industrial plants. These plants were responsible for providing ancillary local equipment, installing and commissioning the equipment. The local consultants also designed and implemented monitoring and evaluation programs to assess the actual costs and benefits of the demonstration projects.

3. DOCUMENTS

3.1 Advisory Reports

The energy audit advisor reports assembled in Volume I represent work Hagler Bailly Consulting energy efficiency experts conducted as advisors to the local consultants.

3.2 Final Audit Reports

Volume II contains the final audit reports which represent the work conducted by the local consultants.

3.3 Monitoring Reports

Volume III contains the monitoring and evaluation reports prepared by the local consultants.

USAID - ROMANIA
ENERGY EFFICIENCY MARKET DEVELOPMENT

ENERGY AUDIT ADVISORY REPORT
BORSA CITY HOSPITAL

prepared for:
S.C. ECO-ERG Technologie Service S.R.L.

prepared by:
Laurent Pommier
RCG/Hagler Bailly, Inc.

March 30, 1994

---

1. Activities

During our work together at Borsa City Hospital from February 8-10, 1994, we held interviews with the Director, Economic Director, and Investment Engineer, to review the hospital energy consumption, operations, and development projects in fields related to energy. We inspected the boiler house, steam and hot water distributions systems, performed boiler testing measures, and initiated a steam trap survey. We reviewed the audit work you had performed so far, and presented an action plan to the management of the hospital. We reached a preliminary agreement on equipment to be supplied to generate thermal energy savings.

2. Background

Borsa City Hospital should be congratulated for its dynamism in researching solutions to improve the operations of the hospital and the service delivered to the patients, including:

- Plans to improve thermal comfort in the pediatry and maternity sections (heat pumps).
- Building a new triage area and a new recovery unit.
- Looking at other sources of energy, including using wind energy, installing a micro-hydro central on the city potable water source, acquiring two hydro plants from Renel, using LPG, using again the existing 30 kW micro-hydro central for the new recovery unit, and piping gas from the oil wells.

3. Recommendations

3.1 General Comments

Our work concentrated on the thermal systems, with a particular emphasis on thermal energy production and distribution. Since then you have started working on the electrical audit and Robert Holzer will be working with you the week of April 4.

Following are comments on the work done so far and on the current equipment selection, as well as suggestions for additional areas to investigate.

3.2 Comments on Actions Identified to Increase the Efficiency of the Boiler House

- Investigate how the preset air/fuel ratio can be re-adjusted on the hot water boilers (CIMAC), so that the portable combustion analyzer can produce some savings not only on the steam boilers but also on the hot water boilers.

- Work with the Hospital to plan a procedure for boiler combustion efficiency testing with the new combustion analyzer: as we saw, the analyzer will bring savings only if regularly used and if adjustments are made <u>and maintained</u>. This requires having the chief of the boiler house (and Mr. Cretu) made responsible so that the performance of the boilers is followed and remedial actions taken (for example, fixing the fuel pump...). Give a list to the hospital of possible operations and maintenance actions to improve combustion efficiency.

- Likewise, the fuel and hot water metering procedures (frequency, analysis, responsibility) should be defined at the same time as the meters are specified: we discussed the example where a simple flow metering of the hot water could give misleading results if the hot water boiler operator can increase the firing rate before he takes a 'random' instantaneous reading of the temperature differential!

  Confirm the hot water pipe size (120mm?), and decide with the Hospital the price above which a hot water energy meter would be considered too expensive, in the case of a $10,000 equipment package, and in the case of a bigger equipment package.

- Contact the Armstrong representative in Bucharest to obtain information on the availability of traps with metric flanges, and to make sure you have all the information needed to fully specify the traps.

  Encourage the Hospital to designate somebody as responsible for steam traps inspection and maintenance, plus somebody to oversee this and do spot-checking.

- Estimate the total cost of putting the condensate recovery system back in working order, and get a preliminary indication from the Hospital that they are ready to take this action. It would be nice to take this action at the same time as the steam traps are replaced.

  The benefit analysis of the condensate recovery should take into account the following parameters:
  - -- reduced feedwater preheat requirements
  - -- reduced heat loss through reduced boiler blowdown requirements
  - -- reduced feedwater preheat requirements (or increased boiler efficiency in the absence of feedwater preheat)
  - -- reduced make-up water costs and water treatment costs (if you ever manage to get an indication of these costs from the hospital!)
  - -- increased electricity cost (condensate pumping)

- To reach nominal specifications, feedwater preheat probably needs more heat input than what will be available from the condensate recovery. This needs to be addressed if you want to claim near-nominal boiler efficiency.

3.3 Additional Suggested Actions to Reduce Fuel Costs

- Make quick demonstration calculations to show to the Hospital how much they lose by not (re-)installing insulation on various pipes and systems such as: distributor in the boiler house, back of the steam boiler, main hot water piping, all steam piping (for example in the laundry room), etc...

- Investigate how much fuel pre-heating is necessary at the day tanks, as opposed to in-line. If some day-tank pre-heating is necessary, investigate if only one day-tank would be enough (to minimize radiation losses).

- Investigate whether the laundry room waste water heat can be easily recovered.

- Work on evaluating: heating zone control, individual thermostatic valves, hot water boiler firing rate regulation, actions on windows.

- Investigate reducing infiltration, and transmission if possible, in the green-house.

- Investigate the hospital ventilation system (if any).

3.4 Recommendations for the Electrical Audit

3.4.1 Electrical - General

The methodology you will adopt for the electrical audit will have to be adapted to the scope and extent of the contract you have negotiated with Borsa City Hospital. Following are suggestions for an investigation plan designed to give you and the hospital an accurate picture of the electrical consumption.

-- Carefully analyze the structure of the electric bills to check the presence and magnitude of:
  - power factor (cos phi) penalties, or KVA billing
  - kW charges or contract size bigger than real kW
  - time-of-use billing
  - taxes

-- Obtain or sketch electrical distribution diagrams. Check if circuits of different voltages exist. Locate the power transformers and note their nominal ratings. Note the indications of any fixed amp-, volt-, and power factor (cos phi) -meters.

-- Perform a balance of the electrical energy and demand:
  - perform inventory of electricity-consuming equipment (motors, lighting, heaters) (- note to which circuit or transformer they are connected)
  - note their nominal kW, if available
  - on appropriate loads, use clamp-on power factor (cos phi) meter to measure actual kW; keep an eye on particularly low power factor (cos phi)
  - evaluate operating hours (for each billing period if applicable)
  - check the resulting kWh consumption against actual consumption.

  If bills include demand or contract size charges:
  - use the above information to evaluate when the kW peak(s) occur, if this is not known by the hospital
  - analyze if some of the peak load can be shed or shifted

-- For each power transformer, compare the size of the connected load to the transformer rating. If some transformers are severely underloaded, evaluate if loads can be regrouped.

-- Investigate if other rates/structures would be available from Renel. If it requires purchasing own transformer or meter, calculate the payback.

192

Calculate what the annual costs would be with these other rates, based on current electricity consumption.

3.4.2 Lighting

If general, try to do a preliminary evaluation of the payback potential of a given measure:

1) calculate how much money can be saved annually by replacing, retrofitting, or controlling the lighting for typical combinations of fixture type and operating hours (for example: 24-hour incandescent, 24-hour fluorescent, night incandescent, night mercury vapor...)

2) based on approximate replacement and maintenance costs, calculate approximate payback.

Following is a suggested work plan:

-- Perform an inventory of lighting equipment and note fixture type, wattage (see below if unknown), and operating hours. Check the general operation at night.

-- Use the clamp-on meter to measure the wattage of each different fixture/source type for which you do not have manufacturer information.

-- Also measure the wattage drawn by the ballasts of failed fluorescent lamps. A large proportion of the fluorescent lamps are burned-out, so that this may represent a significant load. Based on its current financial resources, the hospital should evaluate what fixtures are truly needed and make a commitment to replace the tubes of these fixtures in a timely manner; the other ballasts can then be totally disconnected.

-- Investigate replacing outdoor lighting with high or low pressure sodium. Sodium may also be an option for the gymnasium, if the operating hours justify it.

-- Investigate high efficiency fluorescent.

-- Make sure that no lamp burns when not needed: investigate the use of photocells, timers, installation of switches, motion sensors...

3.4.3 Motors

In a manner similar to the lighting approach, do a preliminary quick evaluation of how much money can be saved annually, and what would be the payback, on a typical large motor running at high operating hours with high load factor for the following measures:

1) Replacement with a high-efficiency motor.

2) Replacement of a severely underloaded motor (less than 50%) with smaller motor. Consider the best case where the hospital can 'cascade' the down-sizing, and the worst case where the hospital needs to purchase a new motor (preferably high efficiency) and cannot reuse the old one.

3) Replacement of old belts with cogged V belts.

4) Installation of an adjustable speed drive, in cases where the motor is driving a fan, pump, or compressor.

If these measures do not work on a best-case example, you do not need to investigate them on all motors.

This being said, following are suggested areas to investigate:

-- When doing the electrical balance, identify underloaded motors by (by order of complexity):
  - measuring cos phi: a low cos phi is a good diagnostic of under-loading
  - comparing motor and load ratings (fan, pump)
  - measuring amps and comparing to the nameplate amps
  - measuring kW and comparing to the nameplate kW

-- Also note motors with particularly low power factors (cos phi)

-- Make sure that no motor is on when not needed: investigate the installation of local ON/OFF buttons or other control switches

-- Check position of dampers or valves to identify potential candidates for adjustable speed drives... If one motor seems to be a good candidate, make sure to be very clear on what the control strategy would be, and how this would translate in terms of system and equipment curves.

3.5 Comments on Equipment

- There are no US-made radiator thermostatic valves. Any Romanian products available?

- Beyond $10,000, it seems that the most useful equipment would be for window/door insulation.

- You may want to consider two different metering strategies depending on the amount of funding available. For example one general fuel meter if $10,000, and two (steam and hot water) if more. Likewise you may have two different solutions for hot water energy metering depending on the funding.

4. Next Steps

(See attached Equipment Procurement Procedure and Equipment Procurement Timetable.)

Continue to work with Hospital to establish equipment lists, taking into account the additional measures that will be identified through the electrical audit. One list should be for $10,000, the other for up to $50,000, within the limits of a reasonable payback, in case more funding is available.

Develop detailed specifications for this equipment. Provide information to Hagler Bailly.

Each item that is to be considered for USAID funding needs to be justified on a 'Recommended Action' form (part of 'English Energy Audit Report Prepared for USAID and RCG/Hagler Bailly').

Prepare English Energy Audit Report to USAID and RCG/Hagler Bailly (set of forms already provided).

Complete energy audit report to Borsa City Hospital, according to terms of your contract.

USAID - ROMANIA
ENERGY EFFICIENCY MARKET DEVELOPMENT

ENERGY AUDIT ADVISORY REPORT
S.C. DANUBIANA S.A.

prepared for:
Camigo Ltd.

prepared by:
Laurent Pommier
RCG/Hagler Bailly, Inc.

July 23, 1994

---

1. ACTIVITIES

During our work together at Danubiana on July 12-15, 1994, we held interviews with the Chief Energy Engineer, Chief of Energy Section, Chief of Energy Service, and other plant technical staff to review the plant's energy consumption, operation and maintenance practices. We inspected the boilers and turbo-generators, the hot water plant, the new compressed air plant, and the production halls. We also discussed possibilities for equipment procurement.

2. GENERAL ENERGY SITUATION

Specific energy consumption at Danubiana is very high. The information provided by the plant translates into a global energy intensity of 80 GJ/t, which is two to three times as high as the intensities found in some developing countries.

This high energy intensity can be attributed to some of the following factors:

- low production, compared to capacity, and short orders with operations spread both in time (between shifts) and in space.
- old facilities and equipment (boilers, compressors...)
- poor maintenance practices (insulation, bypassed traps, leaks...)
- no clear system of accountability and responsibility for energy consumption

Danubiana also experiences some problems with its energy supply:

- low natural gas pressure in the winter
- decreased steam demand (internally and from outside customers), which results in lower electricity production on the back-pressure turbo-generators, and proportionally higher electrical costs
- varying composition of purchased fuel oil

Danubiana is aware of the high energy consumption and is attempting to improve this situation. The purchase of three new centrifugal compressors (soon to come on line) to replace the very old existing units represented a major investment effort. More recently, Danubiana purchased a portable combustion analyzer (Bacharach 300), which could yield big savings. But Danubiana has limited investment capabilities and will probably not be able to implement its current plans anytime soon:

- extensive submetering of energy and utilities
- replacement of the oldest three boilers
- investment in a combined-cycle power plant.

3. BASELINE CONSUMPTION

Based on the information gathered so far:

- Purchased electricity: 93,000 MWh/yr
  @ 84 lei/kWh for Medium Voltage: 7 billion lei/yr = $4.7 million/yr

  Comments:
  - you should check that 93,000 MWh/yr value does not include self-generation
  - you should make sure to understand the exact electric rates: the plant seems to purchase a lot of the electricity in High Voltage, but we could not get the exact proportion nor the rate.

- Natural gas: 80,000,000 Nm3/yr
  @ 102 lei/Nm3 excluding VAT: 8.16 billion lei/yr = $4.9 million/yr

- Heavy fuel oil: 6000 t/y
  @ 108,000 lei/ton excluding VAT: 650 million lei/yr = $390,000/yr

- Electricity generation: 7000 MWh/yr
  Equivalent savings on electric bill @ 84 lei/kWh for Medium Voltage:
  588 million lei/yr = $350,000/yr

- Steam: 40 bars, 350oC. (350,000 lb/h, 590 psi, 660 oF).
  Steam enthalpy: 3090 kJ/kg (1325 BTU/lb).

- Steam production:
  - Annually: 525,000 Gcal/year (2200 TJ/yr), as indicated by plant, is equivalent to approximately 710,000 t/yr.
  - Steam production 30% of "normal" when no production (week-ends), as given by plant
  - Hourly steam generation during production, based on the above: 710,000 / (24 x 52 x (5 + 2 x 0.3)) = 100 t/h
  - Hourly average during production: summer: 120-150 t/h, winter: 160-200 t/h, as indicated by plant

  Comment:
  Obviously, there are some inconsistencies in the information furnished by the plant. To refine the baseline steam generation, you should:
  - examine the one steam meter from which the plant collects its information
  - examine the steam production logs, making sure to understand if the numbers come from the steam meter or if they are artificially derived from other parameters.
  - make sure to understand how the steam sales are considered in these calculation.

- The condensate recovery rate is less than 50% (we were told as low as 30%). Assuming that the steam usage averages approximately 160t/h during production, this represents a requirement of 80 m3/h of treated water (confirmed by plant). And although that may sound high, the plant gave us a price of 2500 lei/m3 of treated water ($1.5/m3), which translates into 200,000 lei/h ($120/h). Annually steam production of 710,000 t/h, with a 50% recovery rate, represents $530,000 per year in treated water costs.

- We were told that the plant also uses about 30 m3/hr of softened make-up water on the cooling water and hot water circuits.

  Comment:
  You should also try to obtain or calculate a cost per unit for this water, and try to refine the annual cost of this make-up water (which could be at least $10 - 30,000/yr).

4. RECOMMENDATIONS

Following are comments on some of the findings, and suggestions for areas to investigate.

4.1 Energy Management Organization

Out of 5500 people working at Danubiana only 2000 work in actual production. The Mechano-energetic department employs about 2500 people, including 500 working for the energy division (utilities, labs...).

Mr. Dumitran, Chief of the Energy Division, has the authority to improve the operations of the power plant and other utility sections, but has no clear authority to initiate changes in the production sections. On the other hand, the production chiefs are not clearly responsible for energy conservation, in part due to the lack of submetering but also because there does not seem to be a clear energy program lead by the production management.

Following are specific findings and suggestions:

- The chiefs of the energy division currently meet daily to review, among other issues, the daily statistic on energy consumption. Both the facts that statistics are kept and that they are reviewed are very positive. However, it seems that the statistics are used only in a reactive way: if specific consumption is much higher than normal, the cause of the problem is investigated. It does not appear that these statistics are used to proactively set energy efficiency targets. Setting weekly or monthly targets could bring good results, if some responsibilities are assigned.

- The energy division does not have access to the daily breakdown of production by shift. Investigate if this can be changed so as to breakdown by shift the daily statistics on specific energy consumption: while statistics by section would be more meaningful than by shift, no proper metering is yet available to perform a breakdown by section. Weekly or monthly breakdowns should not only be given to the appropriate managers but should also be posted for all the section workers.

- The boiler house is among the only sections already equipped with enough metering instruments to keep basic statistics on energy consumption. During the audit we did not see that such statistics were kept. Confirm whether or not some statistics are kept for the boiler house. If not, investigate any obstacle and make a recommendation for that.

- Try to obtain piping diagrams, check them against reality, and investigate what the minimum number of flowmeters would be to obtain a meaningful metering of energy use by section.

- There is a significant cost difference between the on-peak and off-peak electrical rates (nearly 1-to-3). Yet it appears that on-peak and off-peak electricity consumption are not logged separately. The result is that the energy statistics cannot reflect any effort to reduce the average cost per kWh by shifting loads. Possible indicators are the ratio of on-peak consumption to total consumption or, to reflect cost:
    - electrical "lei" per ton of production
    - electrical "lei" per lei of production (to offset inflation)

- The only graph done by the energy department is the sample electric hourly load profile requested by Renel. It would be very beneficial to also plot energy consumption vs. production to better visualize the extent of the problems created by the dispersed production.
- Energy consumption when there is no production (week ends) is 30% of the consumption at normal production rates. Although not unusual, this number is still quite high and a particular effort should be made to identify the causes.

- The fixed component of energy consumption vs. production may actually be higher than 30% (energy consumption when there is no production) because some fixed losses such as leaks and radiation may already be eliminated on week-ends if some steam valves are turned-off when there is no production. Plotting weekly or monthly consumption against production and extending the regression line to the 0-production level (see attached example) may be a more accurate indicator of fixed losses.

- Whatever indicator of fixed losses is used, it should be closely watched to monitor the effort to reduce leaks and improve insulation.

- We were told that the rate of rejects is 1%. If this is true, this sounds good, but you should check that proper attention is paid to this indicator.

4.2 Power House

4.2.1 Air/Fuel Ratio

Findings:

None of the boilers are equipped with continuous flue gas analyzers. The plant used to conduct Orsat tests, but we got the impression they have stopped the practice. The boiler we tested was operating on gas at about 75% load, with a 125% of excess air, and a combustion efficiency of 88%. A very conservative excess air reduction to 80% excess air lead to 90.5% combustion efficiency. If maintained year-round on all boilers, this type of improvement alone could save $140,000 per year.

However, the operators clearly did not want to go any leaner and then decided to "go back to normal" after the adjustments. Changing attitudes and removing physical obstacles to combustion efficiency takes time. Hopefully, the plant will gradually improve the situation now that they have acquired a Bacharach 300.

Savings potential:

We tested only one boiler (old type). Although more measurements are necessary to really calculate what the potential is for efficiency improvement through better control of the air fuel ratio, we can base a first calculation on the above data as all boilers are of the same type, size, and level of automation.

If we assume that the boilers currently run at 125% excess air, 88% combustion efficiency, and that for the average loading they can be brought down to, conservatively, 20% excess air (for gas and heavy oil), then the new combustion efficiency would be around 93-94%, or a 5-6% fuel reduction, which corresponds to about $275,000/yr.

Recommendations:

1) Maximize benefits from the newly acquired Bacharach 300

First of all, within the framework of your energy audit, you can clearly help the plant maximize the savings from this portable combustion analyzer, by:

- recommending and/or conducting some training for the operators
- recommending a schedule for tests with the portable combustion analyzer, and a procedure for logging data, reviewing it, and setting performance goals.
- recommending the best spot to insert the probe:
  - one sampling hole before the air preheater (for example after the make-up water economizer), only to measure the gas composition as accurately as possible; not to calculate efficiency, as the temperature must be compared between air entering and air leaving.
  - one sampling hole after the air preheater (where we conducted the testing) to:
    - measure efficiency (if calibration was done on outside air)
    - compare the oxygen content with the readings taken before the heat exchanger, so as to evaluate infiltration.
- investigate the "real" reasons why they might have wanted to "go back to normal":
  - air intake around the burners (old boilers) may need to be adjusted a bit more

201

closed to increase the negative pressure in the firing chamber
- gas pressure regulators may have been set to a lower setpoint during the winter and, during the summer, may be unnecessarily reducing the gas pressure to levels below the burners specifications. If so, investigate if it would be feasible/practical to readjust the setpoint between seasons.

- investigate if the fans' dampers and speed reduction rheostats offer the proper range of air flow (see below).

Taking all these steps to make the best use of the portable equipment is the best way to make sure that any fixed combustion analyzer funded by USAID delivers as much savings as possible.

2) Install fixed flue gas analyzers

Even if the portable combustion analyzer is used regularly, the achievable savings will not be as big as the savings achievable through fixed flue gas analyzers. We selected this measure as candidate for USAID funding on of the newer boilers, and established the following action items:

- Measure temperature and pressure along the path of flue gas at various sampling holes (the 4 or 5 we defined) for at least one of the newer boilers (#5, if this is the one on which the analyzer would be installed). Do that with gas now, and with fuel oil as soon as possible. If possible, check the time a change in air/fuel ratio takes to reach the analyzer at each of the sampling holes (for a trim control system, minimizing this delay is critical: probe as close to firing chamber as possible is best).

- Measure the dimensions of the stack section and the wall thickness at the various sampling holes, or potential sampling holes.

- When the boilers are running on fuel oil at the highest sulfur content, use the Bacharach 300NSX to measure the level of SO2 in PPM (this level will be important to decide whether or not we should provide a combustibles sensor as well).

- Transmit this information to me as soon as possible so that I can draw specifications and obtain prices in the US.

  In general the following information is necessary to choose a flue gas analyzer:
  - planned location of the sensor (in relation to heat exchanger etc..)
  - flue gas temperature at sensor location (min, max, normal)
  - flue gas pressure at sensor location (min, max, normal)
  - stack diameter and wall thickness at sensor location
  - desired probe length.

- cable length between sensor and location of display and control unit
- presence of H2S or other, which might clog-up the sensor (and quantity)
- fuel(s) composition(s) if possible
- plans to integrate analyzer in a trim control system...

- Get in contact with Fasto to get a quote for Bailey Controls equipment for two scenarios:
  - Maximum $10,000 of funding available, CIF Bucharest price.
  - More funding available: identify different options at different funding levels up to $50-75,000. The following are possibilities to expand the scope of the control system:
    - add combustible sensor to the oxygen analyzer
    - add a air/fuel ratio trim controller and actuator (see comments below on the air damper and speed reduction)
    - equip more than one boiler

4.2.2 Air Flow: dampers and fans

Findings:

So far we have this information:

- Combustion air is regulated with a combination of adjustments on damper position and fan speed.
- All boilers have Induced Draft (ID) fans (200kW), the newer boilers also have Forced Draft (FD) fans (160kW)
- the rheostat offers only 5 positions, and cannot be used for fine adjustments.
- the dampers should permit the operators to modulate flow precisely, but they are very hard to operate (especially on the newer boilers)
- the operators do not use any clear guiding principles to decide how to combine damper and speed to obtain the desired air flow.
- we tried to see if the damper was a more energy efficient way to modulate flow than the current rheostat, but did not have enough time to do obtain clear results.
- On the old boiler we tested, the 200kW 6kV motor was running at around 11A.
  - Assuming a power factor of 0.9, the load would be 100kW, which is only 50% load, so that the power factor was in fact probably less...
  - Assuming a power factor of 0.75, the load would be 85kW

Consumption:

- To put an indicative price figure on the electricity consumption of all the ID fans, we can make the following broad assumptions:

- 3.5 boiler average for 5 days per week and 1 boiler for 2 days per week = 24,350 hours/yr for all boilers, or an average of 4000 hours pre ID fan.
- 85kW per motor
- 84 lei/kWh; 1660 lei/$

The annual electrical cost of the ID fans is about $100,000, or $17,000 per motor.

- Plus the Forced Draft fans of the newer boilers. Assumptions:
  - 160 kW rating; 50% load
  - 4000 hours per fan
  - 84 lei/kWh; 1660 lei/$

  The annual electrical cost of the FD fans is about $48,000, or $16,000 per motor.

Recommendations:

- Repairing or replacing the dampers should be a high priority for the plant, as properly operating dampers could allow to achieve big fuel and gas savings (at least 3-5%) in combination with combustion analyzers (the portable one, plus any future fixed one). They should start with the newer boilers, as the damper problem there seems to be both more acute and easier to fix (as the dampers are more external).

- Based on the responses we received, it does not seem that the plant is really trying to minimize the fan power consumption by trying to use the most efficient combination of dampers and rheostats. In addition to the information we have so far, it would be very useful to check how energy consumption varies depending on the combination of damper position and speed setting.

  - Power metering:
    Evaluate the consumption of all motors, both for ID and FD fans.
    The fact that the fan motors are fed with 6 kV prevents you from directly metering power. There are three solutions. By order of accuracy:
    - If possible, use the ITT meter to measure current around the secondary of the current transformer which feeds the fixed amp-meter installed in the control room (use the proper ratio)
      - If the 6kV feeder is stepped down somewhere to a lower voltage (for example for control), you can use the stepped down voltage and a extension cord to bring the lower voltage next to the current transformer and use the ITT meter as a KW meter (combine the ratios)
      - If not, use just the amps on the ITT
    - If it is not possible to use the ITT, read the amps off the control room meter, but the precision is very low.

- Air flow metering:
  I see two main possibilities. By order of priority:
  - use the velometer when the boiler is not fired (which will also allow a wider testing range)
  - use the Bacharach 300 and try various damper/speed combinations that give you the same excess air readings.

- Although the motors are apparently oversized, % load and operating hours probably do not justify an immediate downsizing of the motors. The option should be considered on motor burnout.

- For the same tonnage, the newer boilers have 80% more installed fan power than the old boilers. Some extra power could be expected as they have the FD fans extra, but 80% still seems a lot: the motors on these boilers may be especially oversized.

- On a 200 kW motor, an adjustable speed drive would probably cost at the very least $35,000. Energy savings of, say, 40% would yield a payback of minimum 5 years. That does not warrant further investigations

- If you determine that the motor could be downsized, then you may reconsider the ASD option at the same time: with a smaller motor, the cost of the ASD would be lower.

4.2.3 Other recommendations for the power house

- The plant performs very detailed tests of the surface blowdown water but, from what we understood, cannot measure the bottom extraction which is discharged directly into the drain. Bottom extraction is decided based on surface measurements. A sampling tap should be installed and used to decide on the amount of bottom blowdown.

- We were told that the bottom blowdown is typically 3-5 seconds per shift, which sounds extremely low, if this information is right. The above measure would help adjust this rate.

- The surface blowdown water we measured was at 1000 ppm of total dissolved solids. It is generally considered that at 40 bars an average recommended value is 2000-2500 ppm. This would suggest that the operator may be extracting more water than necessary from the upper drum.

- Measure the flow and temperature of the continuous blowdown to evaluate if heat recovery would be cost effective.

- Fuel is preheated to 70oC in the steel tanks and to 100oC in the concrete tanks. First check

if all the tanks are needed. Second, investigate why the temperature in the concrete 4tanks could not be brought down at least to 70oC. Third, investigate if the temperature could be brought down even a bit more (we were told that the pumps have problems under 50oC only). Reducing temperature is all the more important as there is no vapor recovery. Finally, check the tank insulation when the fuel firing season starts.

- From what we understood, the plant seems to have currently enough meters to know what the efficiency versus load is for each boiler, but the operators do not optimize the combination. Although the boilers are the same size and same type, there are enough differences between the three new boilers and the three old boilers (sootblowers, FD fans, different burners...) to suggest that the newer boilers are likely to be more efficient than the old ones. The auditors and/or operators should make full use of these meters to determine individual efficiencies.

  If the existing instrumentation is not quite enough to accurately measure individual boiler efficiency, one solution you may want to investigate is to use the week-ends, when only one or two boilers are running, to better define individual boiler efficiency.

- A side note: At least on the old boilers, there are supporting beams going through the structure. When walking near their ends, it feels like air is blowing through. Blanking off the ends of the beams might prevent some convection.

4.3 Thermal - General

We spent only a limited amount of time on the steam distribution system and the steam users. This area needs to be further investigated. However the following can be said:

- Condensate recovery:
  Findings:
  We were told that the current rate of condensate recovery is 30%-50%. Yet, the only reason that was given for this low number was the contamination of steam by fuel oil in leaky fuel preheat coils. This reason alone should not account for 50% of the condensate, so the potential for increased recovery seems to be big and should be evaluated.

  *Note:*Check the exact sequence of operation of the vulcanizing presses to see if the cooled steam is / can be recovered.

  Example of potential savings: 710,000,000 kg/yr x 30% increased recovery rate x (50 oC returned condensate - 12 oC make-up water) x 4.19 kJ/kg oC / 75% boiler plant efficiency / 35,600 kJ/Nm3 = 1,250,000 Nm3/year @ 102 lei/Nm3, 1660 lei/$ = $80,000 /year.

Plus treated water savings $320,000, if the price given to us by the plant is right... Plus savings on blowdown heat

Recommendation:
You should recommend both an initial investment to increase recovery and making the steam trap team (see below) also responsible for increasing the condensate recovery rate. You could recommend to install water meters on the feedwater and on the make-up water lines to keep track of the effort to increase condensate recovery.

- Steam trap bypasses:
  Findings:
  The bypass was open on many of the steam traps we inspected. The chief of the superheated water station told us that he had to do that to get more capacity out of the heat exchanger!

  Recommendations:
  - Implement a steam trap maintenance team so that operators can trust their traps
  - Educate the operators about steam traps and the energy wasted through an open bypass
  - Make sure that all heat exchangers have working thermometers installed, so that the heat exchanger capacity can be monitored.

- Piping insulation:
  Findings:
  In the boiler house, piping insulation is pretty good. Few of the valves are insulated. In the superheated water station, small steam pipes were not insulated and were very hot. We did not have time to truly inspect the rest of the piping.

  Recommendations:
  Doing a detailed audit of piping insulation may be out of the scope of your contract, but you should at least give the plant a few examples of savings and paybacks for piping insulation for different pipe diameters and temperatures. Attached is one example on the uninsulated steam 200 mm valve located on the 40 bar line next to the newer turbine. You could recommend to the plant to make the steam trap team also responsible for insulation.

- Instrumentation:
  We were told that one of the process design departments is in possession of an infrared thermometer. You should recommend that this instrument be shared with the energy department.

- Vulcanizing presses:
  - Check that steam, hot water, and cooling water are supplied at temperatures and

flows that match the specifications of the presses.
- Check that temperature control is adequate.

- Heat exchangers:
  - As said above, check that dial thermometers are installed on all incoming and outgoing lines, and that performance is monitored regularly.
  - Check that temperature control is adequate.
  - The plant has a big problem with water quality, and tube fouling. Check possibilities to improve both water treatment and tube cleaning.

- You should investigate what constitutes the thermal load during week-ends so as to identify possibilities for valve shut-offs etc..

- Due to the low production rates, production can theoretically be regrouped in space and in time. In space: valves could be installed on steam and hot water pipes for sub-sections of the press section, so that thermal energy is not distributed to all the presses when only a few are working. In time: the presses seem to be still running on a three-shift basis. Although it would probably be difficult to negotiate that with the workers, production should be grouped as much as possible on certain shifts or parts of the week. Freed manpower could be instead used for maintenance actions.

- Check the specifications of the operating conditions on the vulcanizing presses. As some of the different streams of fluids (steam, hot water, cold water) seem to share common piping in the presses, it is important to check that all pressures are according to nominal parameters.

- As mentioned above, the make-up rate is very high (30 m3/h) on the water used in the hot water circuits. It is worth investigating where this water goes, and trying to reduce this rate to cut both energy and water costs. Evaluate how much it would cost to install cumulative flow meters on all the make-up water sources: that would provide clear feedback on any efforts to diminish the make-up rate.

4.4 Electrical - General

- The biggest low cost / no cost opportunity lies in the shedding of electric loads during the on-peak hours, when the kWh costs more than usual. Obviously, the incentive for load shifting would be bigger if the plant paid charges on maximum kW, which is not the case, but still, the differential between on-peak and off-peak kWh rates should provide enough of an incentive to shift some loads.

  At 1 MW each, the mixers are the most obvious candidates for load shifting out of the on-

peak hours. However, due to the absence of convenient buffer between the mixers and the calenders, shifting load at the mixers means also shifting some of the production downstream. This is not easy but should be feasible in a plant that runs at 30-40% capacity.

Because it involves labor issues (unions etc...), you should not necessarily try to offer a complete solution to the problem in your audit report, but you should at least present in a short and convincing format how much Danubiana could save by limiting the on-peak use of mixers. For that, I suggest the following steps:

- check the current use of mixers during on-peak hours, and during off-peak time.
- evaluate the actual (not nominal) load of the mixers when in use
- evaluate approximately how much energy is wasted when interrupting the flow of materials and restarting the process afterwards (Monday morning start-ups should give some indications)

- The plant has a few high-pressure sodium lights (from Electrofar), and seems satisfied with them. With long operating hours (three-shift operation), mercury vapor to high-pressure sodium retrofits can produce significant savings.

  Example: 400 W mercury vapor to 250W high-pressure sodium saves 150W: 940 kWh/yr @ 6250 hr/yr: 79,000 lei/yr ($47/yr) @ 84 lei/kWh. This should produce an attractive payback at current Romanian prices for equipment.

- Investigate what unloading mechanism the various compressors use (inlet valving, inlet guide vane, discharge bypass...). Different mechanisms offer different types of part-load efficiencies (see attached copy). If different compressors on the same header have different unloading mechanisms you can possibly adjust the pressure set-points of each one to make sure that the compressors that are the most inefficient at part load are used as base-load.

- On the daily consumption reports, the electricity consumed by the air compressors is estimated only based on the daily operating hour readings. But in reality compressors do not consume a constant quantity of energy. The compressors consume enough electricity to justify installing one electric sub-meter on each of them (at least on the new compressors), because measuring the actual consumption would provide good feedback on the effort to eliminate compressed air leaks.

For general electrical audit recommendations, please refer to the advisory report written for Mobins.

4. NEXT STEPS

- Based on further calculation of energy usage and potential savings, finalize the equipment lists, obtain preliminary approval from Danubiana, and provide specifications to Hagler Bailly. Lists will be finalized based on exact prices. In particular, please provide me with a profile of temperatures along the path of the flue gas (see 4.2.1.2), and see what it would take to resolve the situation with the stuck dampers.

- Each item that is to be considered for USAID funding needs to be justified on a 'Recommended Action' form (part of 'English Energy Audit Report Prepared for USAID and RCG/Hagler Bailly').

- Prepare English Energy Audit Report to USAID and RCG/Hagler Bailly (set of forms already provided).

- Complete energy audit report to Danubiana, according to terms of your contract.

ETSI
CONSULTING

Date: April 14, 1994

To: Zdravcu, Mihail; General Manager, CEM
ARCON, SRL
Bucuresti, Sector 3
Str. Intr. Odobesti NR 1
Bl. Z2, SC. Et. 1, Ap. 59
Bucuresti, Romania

From: Walt Smith, Subcontractor to RCG/H-B

Subject: **Summary Report to CEM on Romanian ESCO, Audits**

Working with you and your staff in support of the STIROM and MATIZOLI Energy Audits has been a pleasure. You have my congratulations and respect for the professional engineering services that are being provided to your clients.

I am enclosing the following materials:

1. Technical information useful in energy audits (10 items, A-J, Copies left with you).
2. A write-up on ECO's and EBO's: Business Strategy and Markets for ESCO's.
3. A suggested Table of Contents for Energy Audit Report.
4. Additional audit data to be collected and/or measured.
5. Lists of ideas to save energy, brainstormed by Audit Team.
6. Lists of equipment for procurement (<$10,000, ~$50,000).
7. Mutually agreed upon follow-up activities and schedule for completion of audits.

The quality of your work in these first two audits will surely result in greatly satisfied clients, repeat business, and new contracts from recognition of the value of your energy services to the industrial market sector.

Best regards,

Walt Smith

Walt Smith, Principal
ETSI Consulting

WPS/ehm
Enclosures

ENERGY TECHNOLOGY SERVICES INTERNATIONAL, INC.
648 Monte Vista Road, Suite 1
Candler, North Carolina 28715 U.S.A.
Business: (704) 665-9323 • Fax: (704) 665-9323 • Home: (704) 665-2520

211

Information Provided to CEM and ESCO Company

I. Technical materials (left with you) useful in energy audits, including:

A. Unit Energy Cost Guidelines
B. Steam Audit, Project Proposal and Presentation
C. Audit Team Organization -- Example PEMEX
   (1) Thermal
   (2) Electrical
   (3) Process
D. Steam Leak/Cost Estimating Techniques
E. Step One: Establish Dollar Value
F. What's New in V-Belts: COG Belts; Half the Losses, Twice the Life
G. Calculating Energy Savings: 30 Illustrated Examples
H. Graphs on Thermal Insulation Data and Loss Estimation Techniques
I. Steam Trap Survey Analysis and Steam Trap Audit Report
J. Energy Audit Training Manual for Refinery Audit (240 pages)

II. Business Strategies and Markets for ESCO's: A wide range of Energy Conservation Opportunities (ECO's ... see report on Audit Guidance and Audits) and Energy Business Opportunities (EBO's -- just now named).

Energy Business Opportunities for the ESCO could include:

A. Recognize that consultants do five things:

(1) Teach -- directly or in the process of doing the job. Teaching <u>how</u> we identify energy waste and apply new technologies brings repeat business, new business, and client-supplier trust.

(2) Identify problems and provide solutions (for example, the Energy Audit to identify low efficiency systems and recommend corrective actions).

(3) Find opportunities for the client and develop them (for example, provide and economic feasibility study for cogeneration).

(4) Provide general technical support for interim periods (for example, the design and installation of ECO's).

(5) Provide expert advice on specific areas and in specialized technologies (for example, how to optimize the reversing cycle time of glass furnace regenerators).

212

Each of these five things that a consultant does represents a business/market opportunity to the ESCO. Many discussions with the CEM's illustrated where the Energy Audit, and its many forms, fits into these five areas of consulting services.

B. Potential ESCO Markets

(1) The Energy Audit

The Energy Audit can, and should, be offered in many forms and sizes to meet the client's need. Identify a critical client (customer) need (for example, steam system problems) and propose a sharply focused scope limited to only the steam system rather than a general facility-wide audit. Other forms of an audit could focus on a specific technology (for example, lighting or variable frequency drives), or a particular part of the factory (for example, Workshop B to better utilize energy in the process technology).

(2) The Energy Management Program

The client's Energy Management Program (E.M.P.) should always be evaluated as a part of a facility-wide audit. Clients with large sites and/or multi-sites often need consulting assistance in setting up and/or maintaining the E.M.P. Propose to such clients your regular support as a resource person (1 or 2 days per month, under contract) to meet with the Factory Energy Team. Needs of the client's E.M.P. include the E.M. organization, how to strengthen employee and management energy conservation attitude, improving the structure and effectiveness of energy teams, how to audit internally, and techniques on how to monitor and report on the progress of the Energy Management Program. Provide regular guidance and technical advice under contract.

(3) Energy Markets Outside of Industrial Audits

The ESCO that provides a wider range of services (outside traditional industrial audits) will be able to obtain contracts during business down cycles and sustain a balanced work load. Some markets for consideration would include: (a) Routine assistance in the Energy Management Program and Factory Energy Team (F.E.T.'s), mentioned in Item 2 above; (b) Municipal and commercial sectors, especially in lighting markets; and (c) Equipment sales, especially of portable measuring instruments and new items introduced, including soft cover valve insulation and COG belts for V-belt drives. This business may best be done in partnership with a colleague so as not to dilute the primary technical focus of industrial energy audits.

213

III. Additional Audit Data to be Collected and/or Measured

STIROM, SA

A. Glass Furnaces (>70% of all fuel use)

(1) Continue to pursue the work we started to optimize the reversing cycle time (now routinely set at 20 minutes regardless of furnace size, regeneration performance, furnace charge, furnace age, etc.). Work directly with STIROM technical staff to perform actual plant trials (under their direction and assessment of risk). Our tests on furnace C-2 indicated a 1% reduction in GAZ consumption at a 15-minute cycle. Benefits from this effort are no cost. Proper statistical design of plant trials and application of Evolutionary Operation Techniques should be utilized.

(2) Measure using the IR pyrometer the temperature map (isotherms) of external refractory for furnaces C-1 and C-2. Recommend corrective measures from heat loss calculations and supporting economics.

B. Compressed Air (~50% of all Electrical Use)

(1) Develop a site-wide compressed air one-line diagram to represent actual air production (Nm^3/h) in balance with all users of compressed air (Nm^3/h), including leaks (see field notes for example).

(2) Identify compressed air ECO's: (a) The Supply-Side (air compressor efficiency improvements, lower set point of production, etc.); (b) The Distribution System (leaks, bottlenecks, pressure regulator problems, etc.); and (c) At the Point-of-Use, in the process technologies where large savings are possible by modifying the way air is used in the processes by changing the process itself.

C. Other

See list of ideas brainstormed jointly with STIROM Technical Staff (Sections 5A, 5B). It is important to find exact dimensions of V-belts on 55 KW dedusting drives.

MATIZOL

A. See list of ideas brainstormed jointly with their technical staff (Sections 5C and 5D).

214

IV. Ideas to Save Energy, Brainstorming by Audit Team

A. STIROM (No Cost and Some Cost)
B. MATIZOL (No Cost, 19 Items; Some Cost, 22 Items)

V. Equipment Lists for Procurement

A. STIROM: List #1 ($10,000); List #2 (~$50,000)
B. MATIZOL: List #1 ($10,000); List #2 (~$50,000)

VI. Schedule (See Milestone Chart)

215

IDEAS TO SAVE ENERGY IN THE FURNACES

1. Add Blanket Insulation to Wall of Melter
2. Recover Waste Heat from Exhaust
   a. To Preheat Combustion Air
   b. To Preheat Cullet with SORG Technology
3. Replace V-Belts on 55 kW Motors with COG Belts (Dedusting)
4. Install 8-Point Controller for Temperature Measure/Control of Glass Furnace
5. Use Blanket-Type Insulation to Crown of Furnace (280-350°C ~100m^2)
6. Maximize Furnace Combustion Efficiency with Optimum Control of Excess Air (and Auto Trim)
7. Insulate Ends of C-2 U Flame Regenerator (120-230°C) 10' x 20'
8. Punch IR Pyrometers (-20 to 500°C and 400-1700°C)
9. Install New High Efficiency Burners on All Furnaces
10. Repair Furnace Envelope and Utilize IR Pyrometer to Identify Hot Spots Before Refractory Failure
11. Install VFD on Combustible Air Fan
12. Control Humidity (Moisture) in Raw Material Feed (Charge) to 5% Specification
13. Optimize Reversing Cycle of Regenerators (Time, etc.)
14. Maintain Constant % Cullet in Feed (Charge) from Prep. Station
15. Find Better Quality Refractory Material
16. Visit Tungstrum to See (First Hand) New Technology in Refractory, Temperature Measurement, etc.
17. Computer Model to Simulate the Glass Furnace Process
18. Adjust Feed Point independently to improve temperature and composition control

2/6

IDEAS TO SAVE ENERGY AT MATIZOL

NO COST

1. "Fix" Steam Traps Not Needing New Parts in Trap Program
2. Install COG Belts
3. Implement an In-Depth Compressed Air Audit to Reduce Air Use by Changing How and Why Air is Used in the Technologies
4. Implement a Steam Survey to Reduce Steam Use by Changing How and Why Steam is Used in the Technologies (at Point-of-Use)
5. Train Supervisors and Employees on Each Shift the Importance of Energy Conservation to Their Jobs
6. Reduce Pressure of Compressed Air at Air Compressors
7. Visit Tungstrum to See New Technologies
8. Study How to Increase Production Rates to Lower Fixed Energy Costs
9. Congratulate the Energy Manager on Doing a Good Job and Give Him More Authority
10. Locate Burners at Optimum Position and Flame Length
11. Have Energy Accountability for Each Product

SOME COST

1. Repair Traps with New Parts and/or Replace Steam Trap
2. Purchase and Install Soft Cover Valve Insulation
3. Repair Refractory
4. Better Utilize Waste Heat from Furnace
5. Automate/Close-Loop Control Furnace
6. Optimize Excess Air with O_2 Controls
7. Install Low Cost Burners
8. Purchase High Performance Refractory
9. Evaluate Economics of New Boilers
10. Provide the E.M. the Necessary Tools to Do His Job
11. Use Correct Refractory in Crown of Furnace
12. Install IP54 Enclosures (Dust Proof) for all Instruments
13. Replace Failed Motors with High Efficiency Class B Type
14. Buy Controller for Compressed Air Pressure Output; set at Lowest Possible Point

217

12. Use USAID Combustion Analyzer to Measure Efficiency of Furnace and Adjust to Maximum Level at Optimum O_2, etc.

13. Repair all Instruments that do not Work or are out of Calibration

14. Control Temperature of HW from the Heat Exchanger

15. Provide Pressure Indication for Air and GAZ to Boilers

16. Close Doors Now Open on Furnaces to Recover More Waste Heat

17. Evaluate Economics of Using HW from HR Instead of Buying Steam to Make HW part of the Year

18. Organize Furnace Repair Material Prior to Shutdowns

19. Test Fans for Optimum Performance

15. Install VFD or Small Motor of Combustion Air Fan or Replace Sheve

16. Use New Technology for Glass Furnace

17. Replace all Circuit Breakers and Cables in Bad Condition

18. Add Seals in Water Pump System

19. Replace Mercury Vapor with HPS and Electric Ballast

20. Maintain 500 mm Pressure on GAZ to Burners

21. Insulate Low Temperature Systems with Matizol Insulation

22. Identify All Furnace Problems and Provide Engineering Solutions for Major Turnarounds

LIST NO. 1 FOR STIROM

Item No.		Cost	Savings	Payback
1.	Universal Digital Measurement Kit with Generator for Unified Signal in mA, mV with High Accuracy for Checking Process Loop Signals on Glass Furnace. More Specifications to Follow per M. Zoravcu Fax of 7 April.	$1,500 (1/2%)	$1,500	12 mos.
2.	IR Non-Contact Thermometer (-20 to +500°C) (Dickson IR550)	500	1,000	6 mos.
3.	IR Non-Contact Pyrometer Equivalent to Wahl Type DHS-29X, Range 482-1760°C for 220 V, 50 HZ	4,500	9,000	6 mos.
4.	COG Belts for Deduster Drives • 5 Belts/Drive x 4 Drives = 20 Belts x $30 50 kW x 4 x 8000 x .055 x .01 = 880	600	900	8 mos.
5.	Ultrasonic Leak Detector for Compressed Air Equivalent to Model ULD-100 (Scales)	500	1,000	6 mos.
6.	Annubar for Compressed Air Flow: • 3.5 Bar, 600 mm ê, 15,000 Nm^3/h	1,800	1,800	12 mos.
		$9,400	$14,300	8 mos. (Avg.)

219

LIST NO. 2 FOR STIROM

Item No.		Cost	Savings	Payback
1.	High Efficiency Burners for Glass Furnace C-1 (16 units) -- equivalent to Körting; GAZ = Total Flow 1500 m^3/h, 8300 $Kcal/m^3$ (LHV) 16 burners to obtain 1580°C in Furnace with Complete Combustion. Out of 16 burners, 8 must be working and 8 not operating (cooling conditions) at total production of 180 tons/day. Similar to Körting Hannover.	67,000	100,000	8 mos.
2.	Digital Controllers for 8 Channels to Provide Continuous PID with 4-20 MA input/output capable of communicating with RS232C computer.			
	5 Loops for Gas Flow) 1 Loop for Gas to Air Ratio) 2 Loops for Draft Pressure)			
	Computer 486 Microprocessor, 33 MHZ with 4 MB RAM and 170 MB Hard Drive. To include 2 floppy drives (3.5" and 5.25") and super VGA monitor.	6,000	6,000	12 mos.
3.	Insulation Blanket for Crown of Glass Furnace C-1 to Include	30,000	30,000	12 mos.
4.	Variable Frequency Drives			
	A. 22 KW F.D. Fan on C-1 380 V, 50 HZ, 1500 RPM	6,000	6,000	12 mos.
	B. 15 KW F.D. Fan on C-2 380 V, 50 HZ, 1500 RPM	4,000	4,000	12 mos.
5.	Ultra Probe 2000, 220 V with Accessories	4,000	4,000	12 mos.

220

LIST NO. 2 FOR STIROM

Item No.		Cost	Savings	Payback
6.	Annubar Flow Meter for Compressed Air			
	A. 2.5 Bar, 500 mm ε, Nm^3/h Max. Flow 25,000	$1,800	$1,800	12 mos
	B. 6.0 Bar, 200 mm ε, Nm^3/h Max. Flow 3,600	1,800	1,800	12 mos.
	Including indicators in Nm^3/h for each.			
7.	Suit for Hot Work to Provide Protection Against Close Work at Temperature of 1000°C and 15 Min.	8,000	8,000	12 mos.
8.	Compressed Air Control System to Maximize Efficiency of IR Units and to Minimize Venting	50,000	50,000	12 mos.
		$178,600	$211,600	10 mos. (Avg.)

221

LIST NO. 1 FOR MATIZOL

Item No.		Cost	Savings	Payback
1.	IR Pyrometer, Non-Contact Surface Measurement. Temperature Range 400°C - 3000°C (Min. 1600°C). Accuracy ± 1% of Reading	$2,000	$2,000	12 mos.
2.	Combustion Analyzer, Equivalent to Bacharach Model 300, 24-8111 Siegert Fuel Eqns., Battery, Printer, 220 Vac 50 HZ, RS-232. Charger, High Temperature Probe to 1060°C, 48" Probe	4,500	9,000	6 mos.
3.	Ultrasonic Leak Detector for Compressed Air Leak Detection. Equivalent to Model ULD-100	500	1,000	6 mos.
4.	Soft Cover Steam Valve Body Insulation for 5 Bar at 180°C			
	1 PC for 100 mm Valve	250	500	6 mos.
	1 PC for 50 mm Valve	150	300	6 mos.
5.	IR Temperature Thermometer for -20°C to +500°C for Measuring Steam Lines and Exterior of Refractory. Equivalent to Dickson IR550.	500	500	12 mos.
6.	COG Belts (matched sets) for Use on Standard V-Belt Sheves (Budget Price $7/Belt)	560	640	10.5 mos.
	(1) 12 sets x 3 belts/set, 5.5 kW motors Size: 13 mm x 8 mm x 1700 mm, 36 belts			
	(2) 11 sets x 4 belts/set, 7.5 kW motors Size: 17 mm x 11 mm x 1700 mm, 44 belts			
7.	Steam Traps for Cardboard Machine Conditions: 10 Bar, 240°C, 20 mm Line 3 Units for 1 TPH Each	1,500	3,000	6 mos.
		$9,960	$16,940	7 mos. (Avg.)

222

LIST NO. 2 FOR MATIZOL

Item No.		Cost	Savings	Payback
1.	Digital Controllers for 8 Channels to Provide Continuous PID with 4-20 mA; Input/Output Capable to Communicate to RS-232C Computer 5 Loops for Gas Flow 1 Loop for Gas to Air Ratio 2 Loops for Draft Pressure Computer 486 Microprocessor 33 MHZ with 4 MB RAM and 170 MB Hard Drive to Include 2 Floppy Drives (3.5" and 5.25") and Super VGA Monitor			
	TOTAL	$5,000	$5,000	12 mos.
2.	Infrared Temperature Measurement; Model Omega OS1200 HAS, Standard Head; Temperature Range 400-3000°C. Sub-ranges 8, Output Types Current 4-20 MA and One Electronics BOXS. Environmental Rating 0-50°C, IP52 + 3 Sensing Heads; Environmental Range 0-175°C, IP65 with Water Cooler Shell Type WC, Sighting Viewer OS1000SV, Air Purge Collar OS1000-2F and Connection Cable 50 Ft., C50 for Sensing Head; Power 220 V, 50 HZ PC = 1.			
	TOTAL	$4,000	$4,000	12 mos.
3	High Efficiency Burner Glass Furnace; 14 M^2 Units (Equivalent to Körting), Gas 150 Nm^3/h Each, LHV = 8300 $Kcal/Nm^3$, to Obtain Total Flow 300 Nm^3/h, 1500°C in Furnace with Complete Equipment for Combustion, 500 mm WC. Total Production of the Furnace 12 tons/day Total Cost -- 2 x $8,000 =	$16,000	$32,000	6 mos.

23

Item No.	Cost	Savings	Payback
4. High Efficiency Burner for Drying Fiber Glass Felt, Complete with Air Fan and Instrumentation for Combustion Optimization, 35 Nm^3/h Gas, 500 mm WC. Quantity: 2			
TOTAL	$6,000	$6,000	12 mos.
5. Ultraprobe Ultrasonic Tester 2000, 220 V, 50 HZ Plus Accessories -- Quantity: 1			
TOTAL	$4,000	$4,000	12 mos.
6. Annubar Flow Meters for:			
a. Natural Gas, 1 Bar, 250 mm ε, Q = 3000 m^3/h -- Quantity: 1			
b. Natural Gas, 0.5 Bar, 100 mm ε, Q = 500 m^3/h -- Quantity: 6			
c. Steam, 10 Bar, 240°C, 450 mm ε, Q = $30^t/h$ -- Quantity: 1			
d. Steam, 5 Bar, 180°C, 100 mm ε, Q = $5^t/h$ -- Quantity: 6			
TOTAL	$29,000	$29,000	12 mos.
TOTAL COST LIST 2:	$64,000	$80,000	10 mos. (Avg.)

224

FOLLOW-UP ACTIVITY SCHEDULE FOR COMPLETING AUDITS

I. STIROM

A. Glass Furnaces

1. Optimize Reversing
2. Measure Refr. Temps.
3. Other (See Idea List)

B. Compressed Air

1. One-Line Diagram
2. Compressor Efficiency
3. Leak Ident. & Repair
4. End Use Reduction

C. Audit Report

1. To RCG/HB
2. To Client

D. Equipment Use/Installation

II. MATIZOL

A. See Idea List

B. Audit Report

C. Equipment Use/Installation

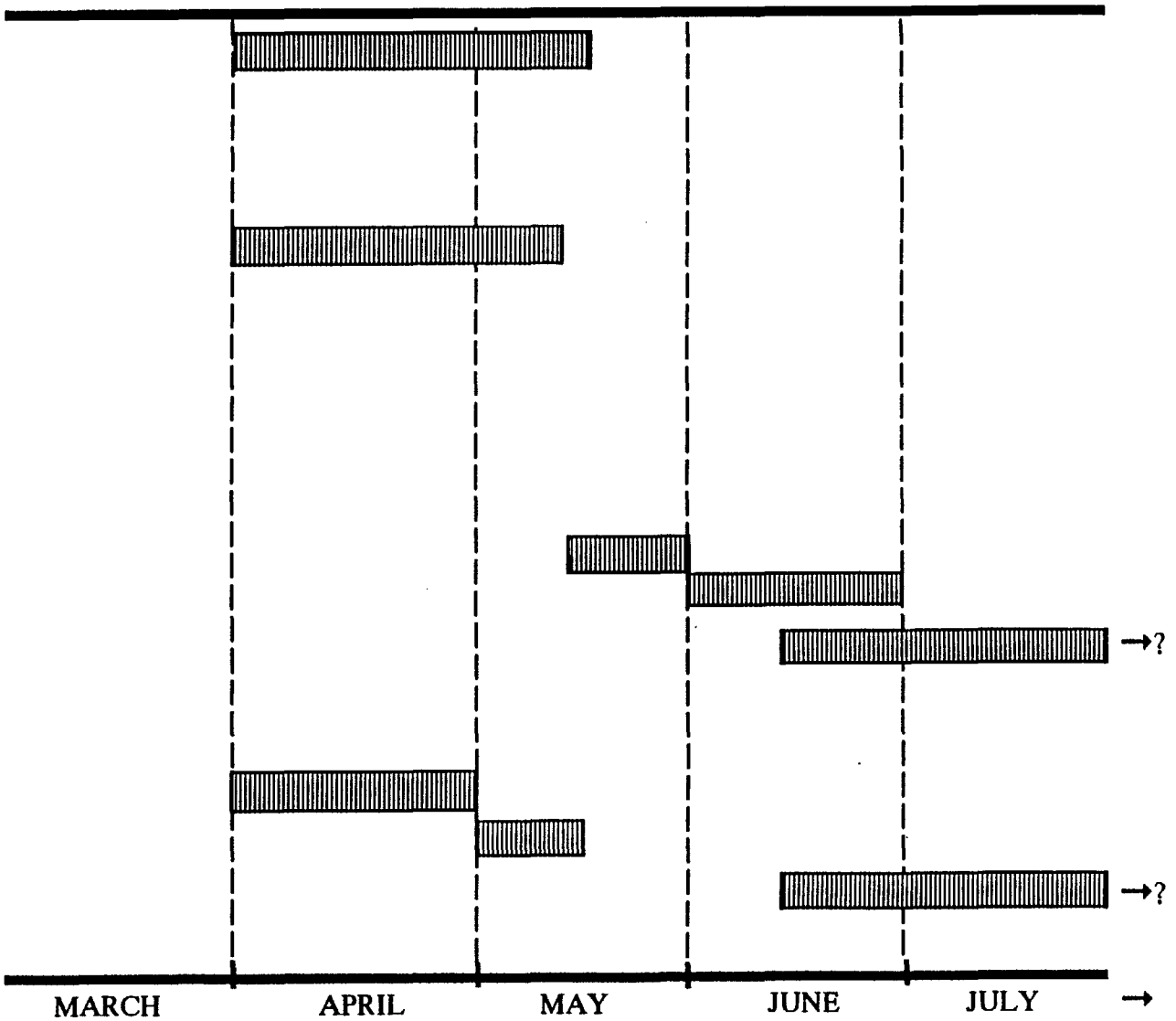

225

TABLE OF CONTENTS

1.0 EXECUTIVE SUMMARY
- 1.1 Objective, Goals, Results
- 1.2 Recommendations with Economics

2.0 INTRODUCTION
- 2.1 Background
- 2.2 Purpose
- 2.3 Expectations

3.0 AUDIT STRATEGY, ORGANIZATION AND PLAN
- 3.1 Audit Team Concepts
- 3.2 Focus and Target Areas
- 3.3 Audit Plan and Schedule

4.0 DATA COLLECTION, AVAILABLE SOURCES
- 4.1 Annual Energy Consumption and Cost
- 4.2 Unit Energy Costs
- 4.3 Plant Infrastructure and Utility Systems
- 4.4 Energy Distribution Systems
- 4.5 Manufacturing Processes, Technologies

5.0 DATA COLLECTION, FIELD WORK
- 5.1 Tour of Energy Systems
- 5.2 Tour of Process Technologies
- 5.3 Observations, Field Notes
- 5.4 Preliminary Identification of ECO's
- 5.5 Energy Measurements of ECO's

6.0 ENERGY ANALYSIS: SUPPLY, DISTRIBUTION, USERS
- 6.1 Pie Charts of Energy Supply and Cost
- 6.2 Unit Cost-Basis-of-Savings (CBOS)
- 6.3 One-Line Utility Balances
- 6.4 Block Process Flow Diagram (Technologies)
- 6.5 System Performance: Efficiency Plus Reliability
- 6.6 Non-Energy Issues: Constraints and Problems
- 6.7 Weakness Analysis

7.0 DEVELOPMENT OF RECOMMENDATIONS
- 7.1 Identifying Ideas to Save Energy (Brainstorming)
- 7.2 Converting Ideas into Recommendations (Economics)
- 7.3 Cost-to-Benefit Analysis (Simple Payback, ROI)
- 7.4 Selecting Leading Candidates (ROI, Risk, Fit)

226

8.0 IMPLEMENTATION PLAN
- 8.1 Responsibility for Results
- 8.2 Implementation Schedule

9.0 CLOSING MEETING WITH PLANT (Preliminary Results)
- 9.1 Presentation of Initial Findings
- 9.2 Major Recommendations with Preliminary Economics
- 9.3 Securing Management Commitment and Follow-up

10.0 APPENDICES
- 10.1 Data, Supporting Facts, Drawings, Specifications
- 10.2 Field Notes, Observations, Measurements
- 10.3 Equipment Lists for Procurement

227

USAID - ROMANIA
ENERGY EFFICIENCY MARKET DEVELOPMENT

ENERGY AUDIT ADVISORY REPORT
S.C. MOBINS S.A.

prepared for:
Camigo Ltd.

prepared by:
Laurent Pommier
RCG/Hagler Bailly, Inc.

April 1, 1994

---

1. Activities

During our work together at Mobins on March 16 and 24, 1994, we held interviews with the Technical Director and engineering staff to review the plant's energy consumption and energy purchasing practices. We inspected the steam and hot water systems, the drying rooms, and the ventilation and transport systems. We also discussed possibilities for equipment procurement.

2. Background

Mobins is very actively trying to modernize its operations, and has recently installed a brand new finishing section. Mobins also faces several energy-related challenges:

- Most of the steam is purchased. The metering does not seem very reliable, and Mobins feels that it has no real control over its energy supply.
- The drying rooms are a crucial component of the operations but are operated manually, with high risk for defects and rejects.
- Ventilation rates are insufficient in the old finishing section, creating hazardous indoor conditions.
- Transport fan load is high, with no recirculation of air.
- The boiler and the compressors are particularly old.

3. Recommendations

Following are comments on the work done so far and suggestions for additional areas to investigate.

3.1 Thermal - General

- Try to evaluate how much it would cost to put the condensate return pipe back in order, and see if the condensate available for return to the provider would be enough to have them waive the 500,000 lei/month fee for no return? Would that be worth trying to return condensate back?

- Or can the wood waste boiler use more condensate return (to avoid make-up water)? Or can the heat of condensate be used somewhere else?

- Steam traps replacement should be evaluated, but based only on steam savings, as opportunities for condensate return seem to be a bit limited.

  The steam trap of the press was declared to be good, but, still, the bypass seemed to be opened. Education of the operators is important.

- The insulation of the distributors is in very bad shape. So are gaskets. A lot of leaks. This definitely should be done.

3.2 Drying Rooms

- At night, try to shut off every steam user in the facility, except the drying rooms, to evaluate over a few hours the exact steam consumption of the drying rooms, based on the meter readings.

- Evaluate the quantity, and lost value, of the rejects due to improper temperature and humidity control. This will help give a more accurate picture of how much money the automation would save.

- Evaluate how/if you can regroup the fresh air intake ducts and the exhaust ducts to minimize the number and cost of the heat exchangers you will evaluate.

- Good regular inspection and maintenance of the dampers will probably be more cost effective than position sensors.

- Try to find blueprints for the drying rooms heating and ventilation systems, to understand the exact set-up of the rooms.

- Evaluate the state of the steam traps (the drying rooms seem to have more steam traps than any other section of the plant).

3.3 Ventilation / Heating

There is a variety of ventilation and heating conditions among the different areas of the building. It seems that large quantities of air may be entering in one room, going through the building, and exhausting in another room. Some of these transfers may not be desirable (varnish- polluted air, heated air...).

- Try to formalize the work we started: investigate where, and how much, air is supplied, and exhausted (including in the transport systems). Use the low velocity probe of the velometer to see if you can detect any flows in the doorways, when all the systems are running.

- The old ventilation system has been disconnected to save 75 kW. In the old finishing section, the only exhaust seem to be the exhaust of the spray booth hoods (plus some exhaust in the tunnel?). The quality of air is very bad in this section, and there is no clear negative pressure in the room to prevent the fumes from going to other sections. Can Mobins run the old exhaust system again, but at a lower speed, or add a couple separate exhausts?

- In the new finishing room, it seems that fresh air is supplied (in large quantities), but that the only formal exhaust is the exhaust of the drying tunnel itself: this may mean that large quantities of 22°C air are going through the tunnel which needs to be at 40°C. Try to use the velometer to see if much air goes in or out of the tunnel through the entrances.

- There does not seem to be any temperature control on the hot water coils of the new finishing section or on the radiators of the other sections. Instead Mobins regulates the temperature at the hot water generator. Try to evaluate if this leads to any energy loss, any overheating, or any underheating.

  In areas where temperature control is very important (varnishing), a temperature indicator (if not automated control) would be helpful.

- We were told that, in the pre-assembly area, heating is done through electric resistance heaters for 3 hours in the morning. Try to compare the cost of this heat with the cost of hot water heat.

- In your evaluation of heat exchangers, do not overlook any increase in fan power that may be required to overcome the pressure drop.

- Something needs to be done to regulate heat in the offices! Is the 'Protocol' the only overheated room? If there are wide differences of temperature between rooms, there is a need for thermostatic valves, or at least manual balancing valves. If not, a general zone valve may be enough.

3.4 Transport System

This is obviously a very big consumer. For example, the five primary transport fans of the machining section cost Mobins more than $40,000 per year in electricity.

- You should quickly check if the transport systems are properly sized:
  - -- in each system, choose a location where:
    - + you can easily access to drill a small hole in the common duct
    - + the hole is located on a straight section, ideally 10 diameters downstream of a change (elbow or restriction) and 5 upstream of any change
    - + the hole is ideally located where the diameter is the largest.
  - -- shut the wood machines off (to avoid getting dust in the pitot tube)
  - -- open all the intakes and use the velometer to measure the air velocity 1) where you drilled the hole (common duct) and 2) at a sample intake
  - -- close all the intakes on the 'auxiliary' machines and measure the air velocity again where you drilled the hole.
  - -- consult with Mobins to see what they consider to be desirable velocities (probably 20 to 30 m/s)
  - -- If the velocities are much more than this, it is probably a sign that the fan is oversized. If so, consult with Mobins to see if they can regroup two oversized transport systems, or change the belts and pulleys on the oversized fan to reduce speed a bit.

- Try to eliminate the infiltration of air in the transport system where there is no wood waste to evacuate.

  Three reasons for that:
  1) This should increase air velocity at the inlets of the machines where there is wood waste to evacuate
  2) This should slightly decrease fan electric consumption
  3) This would decrease a bit the amount of building heat that goes out through the transport system (there does not seem to be any space heating in the

wood shop, but the transport system probably sucks some heated air from the heated areas such as the finishing sections).

Three main actions are possible to reduce infiltration:

1) Use sealant or duct tape to eliminate unwanted air infiltration at all the permanent pipe joints.
2) Make sure that closing dampers are installed on all the transport branches (we saw open branches that were not serving anything!).
   The dampers should also be easily accessible (we saw one which had been left open probably because it was located too high!), and the staff should be told to close these dampers when they stop the machines.
3) Use weather-strip to limit the infiltration around the closed dampers of the machines turned off.

- Mobins' staff should be congratulated for turning off the transport system during the breaks.

- You should quickly investigate if some of the 'auxiliary' machines always work at the same time (if part of the same process). If so, check if they are already connected to an independent transport system. If they are not, check if the machines could be grouped differently, without adding excessive lengths of pipe or exceeding the capacity of any transport system.

- The belts of the transport fans that we saw did not seem to have enough tension. This should be adjusted to prevent slippage.

- Investigate the use of cogged V-belts on the fans. If properly adjusted, this could save 1-2% of consumption.

- Try to understand exactly why Mobins uses a primary transport network to get the saw dust out of the building, and then a secondary to bring it to the boiler house. Reasons Mobins mentioned were fan power and saw dust sorting. Intuitively, it seems that energy is wasted when dust is allowed to settle and transport air exhausted, before the dust is lifted again and air put back in motion to carry the dust further...

- If you find out that significant heated air is going out through the transport system (see 3.3 above), try to calculate how much money would be available to invest in filters if a high percentage of this heat could be recovered. This will show you if the idea is worth exploring further.

3.5 Electrical - General

Electricity represents probably more than 50% of Mobins' energy costs. It is worth taking a comprehensive look at it. The methodology you will adopt for the electrical audit will have to be adapted to the scope and extent of the contract you have negotiated with Mobins. Following are suggestions for an investigation plan designed to give you and the plant an accurate picture of the electrical consumption.

- Carefully analyze the structure of the electric bills to check the presence or size of:
  - power factor (cosine phi) penalties, or KVA billing
  - kW charges or contract size bigger than real kW
  - time-of-use billing
  - taxes

- Obtain or sketch electrical distribution diagrams. Check if circuits of different voltages exist. Locate the power transformers and note their nominal ratings. Note the indications of any fixed amp-, volt-, and power factor (cos phi)- meters.

- Perform a balance of the electrical energy:
  - perform inventory of electricity-consuming equipment (motors, lighting...)
  - note to which circuit or transformer they are connected
  - note their nominal kW, if available
  - on appropriate loads, use clamp-on power factor meter to measure actual kW; keep an eye on particularly low power factor (cos phi)
  - evaluate operating hours
  - check the resulting kWh consumption against actual consumption.

- Analyze if some of the load can be shed or shifted out of the peak hours.

- For each power transformer, compare the size of the connected load to the transformer rating. If some transformers are severely underloaded, evaluate if loads can be regrouped.

- Investigate if other rates/structures would be available from Renel, even if it requires purchasing own transformer or meter.

  Calculate what the annual costs would be with these other rates, based on current electricity consumption.

3.6 Lighting

- Estimate the approximate payback that would result from replacing the fluorescent lighting with high pressure sodium. The operating hours may not justify it but it should be checked.

- In some sections (for example in one of the assembly rooms) some lights are left on, despite plenty of daylight because the workers cannot reach the individual switches that hang from the lamps. Could a centralized switch be added to the lighting circuit, leaving the individual switches in place?

- Some of the outdoor lighting is not controlled by photocells: installing photocells would offer a good payback.

- The regulations call for explosion-proof ('anti-ex') lighting fixtures in the finishing sections. These have plenty of daylight. We were first told that it is not possible to place any of these lights on switches due to regulations. Yet a switch exists only for the lights of the new section. Could a switch for the old section be placed there too? This would require some rewiring as some of the old section lamps need to be on during the day, but about 11 lighting fixtures (15 lamps on at the time) could be turned off during the day. At about $100 saved per year, this would still be a reasonable investment.

3.7 Motors

Do a preliminary evaluation of how much money can be saved annually, and what would be the payback, on a typical large motor running at high operating hours with high load factor for the following measures:

1) Replacement of a severely underloaded motor (less than 50%) with smaller motor.

2) Replacement of old belts with cogged V belts.

If the sample calculation for underloaded motors show some possibilities, try to identify underloaded motors by (by order of complexity):

- measuring cos phi: a low cos phi is a good diagnostic of under-loading
- comparing motor and load ratings (fan, pump)
- measuring amps and comparing to the nameplate amps
- measuring kW and comparing to the nameplate kW

3.8 Compressed Air

- The distribution system seems somewhat leaky. Regular inspection and maintenance should be set-up. Try to calculate the annual cost of an average leak to show Mobins what they can recuperate.

- See if valves are already installed to shut-off some parts of the distribution during the breaks.

- Use an electric meter to determine if the air compressors unload correctly.

- The compressor intake is located to the south of the building. It generally saves energy to locate the intake where the air is the coolest.

- Try to estimate the cost to Mobins of the once-through water cooling system. Compare that to the cost of repairing and operating the cooling tower. If cooling towers are not possible, try to see how low the water flow can be reduced (to save costs and make the heat a better candidate for usage in space heating).

4. Next Steps

(See attached Equipment Procurement Procedure and Equipment Procurement Timetable.)

Based on further calculation of energy usage and potential savings, finalize the equipment lists, obtain preliminary approval from Mobins, and provide specifications to Hagler Bailly. Lists will be finalized based on exact prices.

Each item that is to be considered for USAID funding needs to be justified on a 'Recommended Action' form (part of 'English Energy Audit Report Prepared for USAID and RCG/Hagler Bailly').

Prepare English Energy Audit Report to USAID and RCG/Hagler Bailly (set of forms already provided).

Complete energy audit report to Mobins, according to terms of your contract.

USAID - ROMANIA
ENERGY EFFICIENCY MARKET DEVELOPMENT

ENERGY AUDIT ADVISORY REPORT
MUHA S.R.L.

prepared for:
S.C. Invest Proiect S.R.L.

prepared by:
Laurent Pommier
RCG/Hagler Bailly, Inc.

March 31, 1994

---

1. Activities

During our work together at Muha from March 21-23, we held interviews with the General Managers, Energy Manager, and technical staff, to review the plant's energy consumption, operations, and development plans. We inspected and measured the boiler house, hot water system, and transport systems. We reviewed current design for the automation of the drying rooms and for ventilation. We reached a preliminary agreement on equipment to be supplied and established preliminary specifications.

2. Background

Muha construction company has aggressive development plans and must therefore plan the efficient development of its energy systems. The main energy challenges facing Muha are:

- As much as possible, integrate energy efficient features in the original design of its facilities and systems.
- Diversify energy sources beyond wood waste to insure adequate energy supply.
- Getting control of its lumber supply and drying.
- Using these assets to maximize profits, including reselling excess dried wood.

- Getting full control of its compressed air needs.

3. Recommendations

Following are comments on the work done so far and on current equipment selection, as well as suggestions for additional areas to investigate.

3.1 Transport Systems

- Make sure the plant covers the holes we drilled in the duct!

- Refine the idea we developed about linking the two transport systems, to be able to turn the 20 kW motor off when not all the machines are in use. This would save energy in two ways:
  1) save on fan electric consumption
  2) allow more space heat to be recovered, as only the air of the 30 kW duct is recirculated

- Try to eliminate the infiltration of air in the transport system where there is no wood waste to evacuate.

  Three reasons for that:
  1) This should increase air velocity at the inlets of the working machines
  2) This should slightly decrease fan electric consumption
  3) This would increase the number of hours where only one fan would be enough for the two transport systems

  Two main actions are possible to reduce infiltration:
  1) Use sealant or duct tape to eliminate unwanted air infiltration at all the permanent pipe joints.
  2) Use weather-strip to limit the infiltration around the closed dampers of the turned off machines, as the existing dampers are only roughly fitted.

- Maintaining enough velocity in the common duct area of the system is critical to insure effective transport and should not be sacrificed in order to seek extra electricity savings.

  -- To prevent accumulation in the common duct, you should use the velometer to measure how much velocity drops in the common duct area when many intakes are closed (the velocity drop depends on how steep the fan curve is at this point). This would show you if you have to always leave a minimum of intakes open.

-- To prevent accumulation in the intake branches, you should also use the velometer to measure how low the velocity gets at the intakes when all the intakes are open (and the two systems are connected, running on one fan). This would show you how many open intakes you can have on a single fan.

If you think that the risk of wood accumulation is big enough, you may want to explore a system of min-max alarms on a static pressure sensor, or a velocity sensor, in the common duct of the 30 kW fan: low velocity would signal a risk of accumulation in the common duct.

- If the filtering system is successful on the 30 kW duct, and if the 20 kW system is used often enough, try to calculate how much space heat (and money) is lost by not recirculating the 20 kW air. If high enough, this may be a way for you to get another design contract with Muha.

- When the recirculation system and heating system are both operating on a cold day, try to measure the temperature loss due to the cyclones. Investigate if that would justify insulation (probably not, but it's better to be sure)

- Investigate the use of cogged V-belts on the fans. If properly adjusted, this could save 1-2% of consumption.

3.2 Ventilation / Heating

- I encourage you to consider heat recovery in the drying room. As we discussed 26,000 Nm3/hr is an extremely high air change rate (about 100 changes per hour) and represents about $10,000 in fuel costs during the heating season.

  Looking at the issue now, before a multiple-intake ventilation system is installed, would save money compared to do that later. Even if you do not want to do any heat recovery yet, a system with a single intake and single exhaust would make heat recovery simpler and cheaper later.

- Make sure that the finishing section's doors are weather-stripped to avoid sucking too much air from the adjacent sections. Install automatic door springs on the doors.

- Make sure that a general valve is installed on the space heating circuits to totally shut them off during the summer season.

- The doors of the house should be weather-stripped.

3.3 Drying Room

- With the drying room also, the potential savings achievable through heat recovery are high.
- It is important to insure adequate doors to prevent both infiltration and transmission losses.
- I would encourage you to look further into the situation where the humidity would be too high and the temperature too low (dry-bulb temperature too low and wet bulb temperature too high): if hot water still flows through the radiators and exhaust fans blow through these radiators towards open dampers, then there would be a definite waste of heat.
- If you want to investigate the existence, quality and price of Romanian modulating valves, we can find a regulating controller here in the US.

3.4 Other Comments

- A low boiler water level should activate the make-up water valve. That should not bring the second pump on line. The second pump should come on line based on the water supply pressure.
- Hot water pipes located in the boiler house should be insulated.
- Reflectors should be installed on the fluorescent lights of the shop.
- Mr. Romeo Raducanu says that the High Pressure Sodium lamps are not reliable in Romania. Is this based on his experience or on hear-say? It could be worth doing a bit of research for better products before Muha invests in many mercury vapor lights.
- Use the Clamp-on electric meter to determine if the 75 kW air compressor unloads correctly.
- Check that the air tank is big enough for the applications and that the pressure min-max are set so that the compressor does not cycle too rapidly.

- Check that the compressor intake is located to the north of the building (cooler), and make sure this is still the case when the compressor is moved.

4. Next Steps

(See attached Equipment Procurement Procedure and Equipment Procurement Timetable.)

Prepare specifications for automated oil burner. Find out details of the command signals to the 5-position air dampers. Give the information to Hagler Bailly. Inform Hagler Bailly of any modifications in the specifications we previously discussed. Hagler Bailly will get preliminary pricing so that we can finalize the equipment list and get the plant's final approval on it.

Each item that is to be considered for USAID funding needs to be justified on a 'Recommended Action' form (part of 'English Energy Audit Report Prepared for USAID and RCG/Hagler Bailly').

Prepare English Energy Audit Report to USAID and RCG/Hagler Bailly (set of forms already provided).

Complete energy audit report to Muha, according to terms of your contract.

ETSI
CONSULTING

Date: April 14, 1994

To: Zdravcu, Mihail; General Manager, CEM
ARCON, SRL
Bucuresti, Sector 3
Str. Intr. Odobesti NR 1
Bl. Z2, SC. Et. 1, Ap. 59
Bucuresti, Romania

From: Walt Smith, Subcontractor to RCG/H-B

Subject: **Summary Report to CEM on Romanian ESCO, Audits**

Working with you and your staff in support of the STIROM and MATIZOLI Energy Audits has been a pleasure. You have my congratulations and respect for the professional engineering services that are being provided to your clients.

I am enclosing the following materials:

1. Technical information useful in energy audits (10 items, A-J, Copies left with you).
2. A write-up on ECO's and EBO's: Business Strategy and Markets for ESCO's.
3. A suggested Table of Contents for Energy Audit Report.
4. Additional audit data to be collected and/or measured.
5. Lists of ideas to save energy, brainstormed by Audit Team.
6. Lists of equipment for procurement (<$10,000, ~$50,000).
7. Mutually agreed upon follow-up activities and schedule for completion of audits.

The quality of your work in these first two audits will surely result in greatly satisfied clients, repeat business, and new contracts from recognition of the value of your energy services to the industrial market sector.

Best regards,

Walt Smith

Walt Smith, Principal
ETSI Consulting

WPS/ehm
Enclosures

ENERGY TECHNOLOGY SERVICES INTERNATIONAL, INC.
648 Monte Vista Road, Suite 1
Candler, North Carolina 28715 U.S.A.
Business: (704) 665-9323 • Fax: (704) 665-9323 • Home: (704) 665-2520

241

Information Provided to CEM and ESCO Company

I. Technical materials (left with you) useful in energy audits, including:

A. Unit Energy Cost Guidelines
B. Steam Audit, Project Proposal and Presentation
C. Audit Team Organization -- Example PEMEX
   (1) Thermal
   (2) Electrical
   (3) Process
D. Steam Leak/Cost Estimating Techniques
E. Step One: Establish Dollar Value
F. What's New in V-Belts: COG Belts; Half the Losses, Twice the Life
G. Calculating Energy Savings: 30 Illustrated Examples
H. Graphs on Thermal Insulation Data and Loss Estimation Techniques
I. Steam Trap Survey Analysis and Steam Trap Audit Report
J. Energy Audit Training Manual for Refinery Audit (240 pages)

II. Business Strategies and Markets for ESCO's: A wide range of Energy Conservation Opportunities (ECO's ... see report on Audit Guidance and Audits) and Energy Business Opportunities (EBO's -- just now named).

Energy Business Opportunities for the ESCO could include:

A. Recognize that consultants do five things:

(1) Teach -- directly or in the process of doing the job. Teaching <u>how</u> we identify energy waste and apply new technologies brings repeat business, new business, and client-supplier trust.

(2) Identify problems and provide solutions (for example, the Energy Audit to identify low efficiency systems and recommend corrective actions).

(3) Find opportunities for the client and develop them (for example, provide and economic feasibility study for cogeneration).

(4) Provide general technical support for interim periods (for example, the design and installation of ECO's).

(5) Provide expert advice on specific areas and in specialized technologies (for example, how to optimize the reversing cycle time of glass furnace regenerators).

242

Each of these five things that a consultant does represents a business / market opportunity to the ESCO. Many discussions with the CEM's illustrated where the Energy Audit, and its many forms, fits into these five areas of consulting services.

B. Potential ESCO Markets

(1) The Energy Audit

The Energy Audit can, and should, be offered in many forms and sizes to meet the client's need. Identify a critical client (customer) need (for example, steam system problems) and propose a sharply focused scope limited to only the steam system rather than a general facility-wide audit. Other forms of an audit could focus on a specific technology (for example, lighting or variable frequency drives), or a particular part of the factory (for example, Workshop B to better utilize energy in the process technology).

(2) The Energy Management Program

The client's Energy Management Program (E.M.P.) should always be evaluated as a part of a facility-wide audit. Clients with large sites and / or multi-sites often need consulting assistance in setting up and / or maintaining the E.M.P. Propose to such clients your regular support as a resource person (1 or 2 days per month, under contract) to meet with the Factory Energy Team. Needs of the client's E.M.P. include the E.M. organization, how to strengthen employee and management energy conservation attitude, improving the structure and effectiveness of energy teams, how to audit internally, and techniques on how to monitor and report on the progress of the Energy Management Program. Provide regular guidance and technical advice under contract.

(3) Energy Markets Outside of Industrial Audits

The ESCO that provides a wider range of services (outside traditional industrial audits) will be able to obtain contracts during business down cycles and sustain a balanced work load. Some markets for consideration would include: (a) Routine assistance in the Energy Management Program and Factory Energy Team (F.E.T.'s), mentioned in Item 2 above; (b) Municipal and commercial sectors, especially in lighting markets; and (c) Equipment sales, especially of portable measuring instruments and new items introduced, including soft cover valve insulation and COG belts for V-belt drives. This business may best be done in partnership with a colleague so as not to dilute the primary technical focus of industrial energy audits.

243

III. Additional Audit Data to be Collected and/or Measured

STIROM, SA

A. Glass Furnaces (>70% of all fuel use)

(1) Continue to pursue the work we started to optimize the reversing cycle time (now routinely set at 20 minutes regardless of furnace size, regeneration performance, furnace charge, furnace age, etc.). Work directly with STIROM technical staff to perform actual plant trials (under their direction and assessment of risk). Our tests on furnace C-2 indicated a 1% reduction in GAZ consumption at a 15-minute cycle. Benefits from this effort are no cost. Proper statistical design of plant trials and application of Evolutionary Operation Techniques should be utilized.

(2) Measure using the IR pyrometer the temperature map (isotherms) of external refractory for furnaces C-1 and C-2. Recommend corrective measures from heat loss calculations and supporting economics.

B. Compressed Air (~50% of all Electrical Use)

(1) Develop a site-wide compressed air one-line diagram to represent actual air production (Nm^3/h) in balance with all users of compressed air (Nm^3/h), including leaks (see field notes for example).

(2) Identify compressed air ECO's: (a) The Supply-Side (air compressor efficiency improvements, lower set point of production, etc.); (b) The Distribution System (leaks, bottlenecks, pressure regulator problems, etc.); and (c) At the Point-of-Use, in the process technologies where large savings are possible by modifying the way air is used in the processes by changing the process itself.

C. Other

See list of ideas brainstormed jointly with STIROM Technical Staff (Sections 5A, 5B). It is important to find exact dimensions of V-belts on 55 KW dedusting drives.

MATIZOL

A. See list of ideas brainstormed jointly with their technical staff (Sections 5C and 5D).

244

IV. Ideas to Save Energy, Brainstorming by Audit Team

A. STIROM (No Cost and Some Cost)
B. MATIZOL (No Cost, 19 Items; Some Cost, 22 Items)

V. Equipment Lists for Procurement

A. STIROM: List #1 ($10,000); List #2 (~$50,000)
B. MATIZOL: List #1 ($10,000); List #2 (~$50,000)

VI. Schedule (See Milestone Chart)

245

IDEAS TO SAVE ENERGY IN THE FURNACES

1. Add Blanket Insulation to Wall of Melter

2. Recover Waste Heat from Exhaust

   a. To Preheat Combustion Air
   b. To Preheat Cullet with SORG Technology

3. Replace V-Belts on 55 kW Motors with COG Belts (Dedusting)

4. Install 8-Point Controller for Temperature Measure/Control of Glass Furnace

5. Use Blanket-Type Insulation to Crown of Furnace (280-350°C ~100m^2)

6. Maximize Furnace Combustion Efficiency with Optimum Control of Excess Air (and Auto Trim)

7. Insulate Ends of C-2 U Flame Regenerator (120-230°C) 10' x 20'

8. Punch IR Pyrometers (-20 to 500°C and 400-1700°C)

9. Install New High Efficiency Burners on All Furnaces

10. Repair Furnace Envelope and Utilize IR Pyrometer to Identify Hot Spots Before Refractory Failure

11. Install VFD on Combustible Air Fan

12. Control Humidity (Moisture) in Raw Material Feed (Charge) to 5% Specification

13. Optimize Reversing Cycle of Regenerators (Time, etc.)

14. Maintain Constant % Cullet in Feed (Charge) from Prep. Station

15. Find Better Quality Refractory Material

16. Visit Tungstrum to See (First Hand) New Technology in Refractory, Temperature Measurement, etc.

17. Computer Model to Simulate the Glass Furnace Process

18. Adjust Feed Point independently to improve temperature and composition control

246

IDEAS TO SAVE ENERGY AT MATIZOL

NO COST

1. "Fix" Steam Traps Not Needing New Parts in Trap Program
2. Install COG Belts
3. Implement an In-Depth Compressed Air Audit to Reduce Air Use by Changing How and Why Air is Used in the Technologies
4. Implement a Steam Survey to Reduce Steam Use by Changing How and Why Steam is Used in the Technologies (at Point-of-Use)
5. Train Supervisors and Employees on Each Shift the Importance of Energy Conservation to Their Jobs
6. Reduce Pressure of Compressed Air at Air Compressors
7. Visit Tungstrum to See New Technologies
8. Study How to Increase Production Rates to Lower Fixed Energy Costs
9. Congratulate the Energy Manager on Doing a Good Job and Give Him More Authority
10. Locate Burners at Optimum Position and Flame Length
11. Have Energy Accountability for Each Product

SOME COST

1. Repair Traps with New Parts and/or Replace Steam Trap
2. Purchase and Install Soft Cover Valve Insulation
3. Repair Refractory
4. Better Utilize Waste Heat from Furnace
5. Automate/Close-Loop Control Furnace
6. Optimize Excess Air with O_2 Controls
7. Install Low Cost Burners
8. Purchase High Performance Refractory
9. Evaluate Economics of New Boilers
10. Provide the E.M. the Necessary Tools to Do His Job
11. Use Correct Refractory in Crown of Furnace
12. Install IP54 Enclosures (Dust Proof) for all Instruments
13. Replace Failed Motors with High Efficiency Class B Type
14. Buy Controller for Compressed Air Pressure Output; set at Lowest Possible Point

12. Use USAID Combustion Analyzer to Measure Efficiency of Furnace and Adjust to Maximum Level at Optimum O_2, etc.

13. Repair all Instruments that do not Work or are out of Calibration

14. Control Temperature of HW from the Heat Exchanger

15. Provide Pressure Indication for Air and GAZ to Boilers

16. Close Doors Now Open on Furnaces to Recover More Waste Heat

17. Evaluate Economics of Using HW from HR Instead of Buying Steam to Make HW part of the Year

18. Organize Furnace Repair Material Prior to Shutdowns

19. Test Fans for Optimum Performance

15. Install VFD or Small Motor of Combustion Air Fan or Replace Sheve

16. Use New Technology for Glass Furnace

17. Replace all Circuit Breakers and Cables in Bad Condition

18. Add Seals in Water Pump System

19. Replace Mercury Vapor with HPS and Electric Ballast

20. Maintain 500 mm Pressure on GAZ to Burners

21. Insulate Low Temperature Systems with Matizol Insulation

22. Identify All Furnace Problems and Provide Engineering Solutions for Major Turnarounds

248

LIST NO. 1 FOR STIROM

Item No.		Cost	Savings	Payback
1.	Universal Digital Measurement Kit with Generator for Unified Signal in mA, mV with High Accuracy for Checking Process Loop Signals on Glass Furnace. More Specifications to Follow per M. Zoravcu Fax of 7 April.	$1,500 (1/2%)	$1,500	12 mos.
2.	IR Non-Contact Thermometer (-20 to +500°C) (Dickson IR550)	500	1,000	6 mos.
3.	IR Non-Contact Pyrometer Equivalent to Wahl Type DHS-29X, Range 482-1760°C for 220 V, 50 HZ	4,500	9,000	6 mos.
4.	COG Belts for Deduster Drives • 5 Belts/Drive x 4 Drives = 20 Belts x $30 50 kW x 4 x 8000 x .055 x .01 = 880	600	900	8 mos.
5.	Ultrasonic Leak Detector for Compressed Air Equivalent to Model ULD-100 (Scales)	500	1,000	6 mos.
6.	Annubar for Compressed Air Flow: • 3.5 Bar, 600 mm ε, 15,000 Nm^3/h	1,800	1,800	12 mos.
		$9,400	$14,300	8 mos. (Avg.)

249

LIST NO. 2 FOR STIROM

Item No.		Cost	Savings	Payback
1.	High Efficiency Burners for Glass Furnace C-1 (16 units) -- equivalent to Körting; GAZ = Total Flow 1500 m^3/h, 8300 $Kcal/m^3$ (LHV) 16 burners to obtain 1580°C in Furnace with Complete Combustion. Out of 16 burners, 8 must be working and 8 not operating (cooling conditions) at total production of 180 tons/day. Similar to Körting Hannover.	67,000	100,000	8 mos.
2.	Digital Controllers for 8 Channels to Provide Continuous PID with 4-20 MA input/output capable of communicating with RS232C computer.			
	5 Loops for Gas Flow) 1 Loop for Gas to Air Ratio) 2 Loops for Draft Pressure)			
	Computer 486 Microprocessor, 33 MHZ with 4 MB RAM and 170 MB Hard Drive. To include 2 floppy drives (3.5" and 5.25") and super VGA monitor.	6,000	6,000	12 mos.
3.	Insulation Blanket for Crown of Glass Furnace C-1 to Include	30,000	30,000	12 mos.
4.	Variable Frequency Drives			
	A. 22 KW F.D. Fan on C-1 380 V, 50 HZ, 1500 RPM	6,000	6,000	12 mos.
	B. 15 KW F.D. Fan on C-2 380 V, 50 HZ, 1500 RPM	4,000	4,000	12 mos.
5.	Ultra Probe 2000, 220 V with Accessories	4,000	4,000	12 mos.

280

LIST NO. 2 FOR STIROM

Item No.		Cost	Savings	Payback
6.	Annubar Flow Meter for Compressed Air			
	A. 2.5 Bar, 500 mm ε, Nm^3/h Max. Flow 25,000	$1,800	$1,800	12 mos
	B. 6.0 Bar, 200 mm ε, Nm^3/h Max. Flow 3,600	1,800	1,800	12 mos.
	Including indicators in Nm^3/h for each.			
7.	Suit for Hot Work to Provide Protection Against Close Work at Temperature of 1000°C and 15 Min.	8,000	8,000	12 mos.
8.	Compressed Air Control System to Maximize Efficiency of IR Units and to Minimize Venting	50,000	50,000	12 mos.
		$178,600	$211,600	10 mos. (Avg.)

-29

LIST NO. 1 FOR MATIZOL

Item No.		Cost	Savings	Payback
1.	IR Pyrometer, Non-Contact Surface Measurement. Temperature Range 400°C - 3000°C (Min. 1600°C). Accuracy ± 1% of Reading	$2,000	$2,000	12 mos.
2.	Combustion Analyzer, Equivalent to Bacharach Model 300, 24-8111 Siegert Fuel Eqns., Battery, Printer, 220 Vac 50 HZ, RS-232, Charger, High Temperature Probe to 1060°C, 48" Probe	4,500	9,000	6 mos.
3.	Ultrasonic Leak Detector for Compressed Air Leak Detection. Equivalent to Model ULD-100	500	1,000	6 mos.
4.	Soft Cover Steam Valve Body Insulation for 5 Bar at 180°C			
	1 PC for 100 mm Valve	250	500	6 mos.
	1 PC for 50 mm Valve	150	300	6 mos.
5.	IR Temperature Thermometer for -20°C to +500°C for Measuring Steam Lines and Exterior of Refractory. Equivalent to Dickson IR550.	500	500	12 mos.
6.	COG Belts (matched sets) for Use on Standard V-Belt Sheves (Budget Price $7/Belt)	560	640	10.5 mos.
	(1) 12 sets x 3 belts/set, 5.5 kW motors Size: 13 mm x 8 mm x 1700 mm, 36 belts			
	(2) 11 sets x 4 belts/set, 7.5 kW motors Size: 17 mm x 11 mm x 1700 mm, 44 belts			
7.	Steam Traps for Cardboard Machine Conditions: 10 Bar, 240°C, 20 mm Line 3 Units for 1 TPH Each	1,500	3,000	6 mos.
		$9,960	$16,940	7 mos. (Avg.)

252

LIST NO. 2 FOR MATIZOL

Item No.		Cost	Savings	Payback
1.	Digital Controllers for 8 Channels to Provide Continuous PID with 4-20 mA; Input/Output Capable to Communicate to RS-232C Computer 5 Loops for Gas Flow 1 Loop for Gas to Air Ratio 2 Loops for Draft Pressure Computer 486 Microprocessor 33 MHZ with 4 MB RAM and 170 MB Hard Drive to Include 2 Floppy Drives (2.5" and 5.25") and Super VGA Monitor			
	TOTAL	$5,000	$5,000	12 mos.
2.	Infrared Temperature Measurement; Model Omega OS1200 HAS, Standard Head; Temperature Range 400-3000°C. Sub-ranges 8, Output Types Current 4-20 MA and One Electronics BOXS. Environmental Rating 0-50°C, IP52 + 3 Sensing Heads; Environmental Range 0-175°C, IP65 with Water Cooler Shell Type WC, Sighting Viewer OS1000SV, Air Purge Collar OS1000-2F and Connection Cable 50 Ft., C50 for Sensing Head; Power 220 V, 50 HZ PC = 1.			
	TOTAL	$4,000	$4,000	12 mos.
3.	High Efficiency Burner Glass Furnace; 14 M^2 Units (Equivalent to Körting), Gas 150 Nm^3/h Each, LHV = 8300 Kcal/Nm^3, to Obtain Total Flow 300 Nm^3/h, 1500°C in Furnace with Complete Equipment for Combustion, 500 mm WC. Total Production of the Furnace 12 tons/day Total Cost -- 2 x $8,000 =	$16,000	$32,000	6 mos.

253

Item No.	Cost	Savings	Payback
4. High Efficiency Burner for Drying Fiber Glass Felt, Complete with Air Fan and Instrumentation for Combustion Optimization, 35 Nm^3/h Gas, 500 mm WC. Quantity: 2			
TOTAL	$6,000	$6,000	12 mos.
5. Ultraprobe Ultrasonic Tester 2000, 220 V, 50 HZ Plus Accessories -- Quantity: 1			
TOTAL	$4,000	$4,000	12 mos.
6. Annubar Flow Meters for:			
a. Natural Gas, 1 Bar, 250 mm è, Q = 3000 m^3/h – Quantity: 1			
b. Natural Gas, 0.5 Bar, 100 mm è, Q = 500 m^3/h – Quantity: 6			
c. Steam, 10 Bar, 240°C, 450 mm è, Q = $30^t/h$ – Quantity: 1			
d. Steam, 5 Bar, 180°C, 100 mm è , Q = $5^t/h$ – Quantity: 6			
TOTAL	$29,000	$29,000	12 mos.
TOTAL COST LIST 2:	$64,000	$80,000	10 mos. (Avg.)

254

FOLLOW-UP ACTIVITY SCHEDULE FOR COMPLETING AUDITS

I. STIROM

A. Glass Furnaces

1. Optimize Reversing
2. Measure Refr. Temps.
3. Other (See Idea List)

B. Compressed Air

1. One-Line Diagram
2. Compressor Efficiency
3. Leak Ident. & Repair
4. End Use Reduction

C. Audit Report

1. To RCG/HB
2. To Client

D. Equipment Use/Installation

II. MATIZOL

A. See Idea List

B. Audit Report

C. Equipment Use/Installation

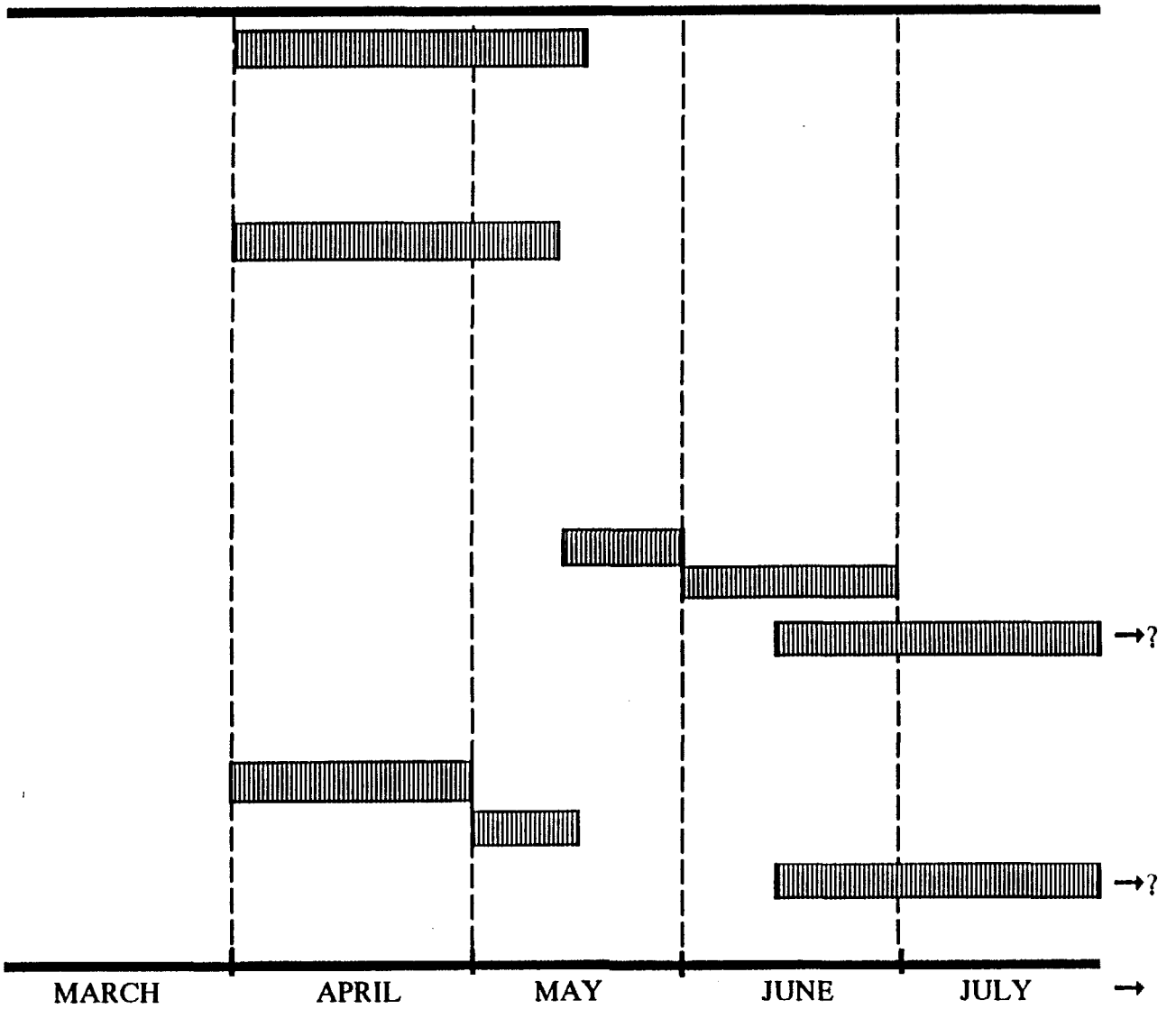

TABLE OF CONTENTS

1.0 EXECUTIVE SUMMARY
- 1.1 Objective, Goals, Results
- 1.2 Recommendations with Economics

2.0 INTRODUCTION
- 2.1 Background
- 2.2 Purpose
- 2.3 Expectations

3.0 AUDIT STRATEGY, ORGANIZATION AND PLAN
- 3.1 Audit Team Concepts
- 3.2 Focus and Target Areas
- 3.3 Audit Plan and Schedule

4.0 DATA COLLECTION, AVAILABLE SOURCES
- 4.1 Annual Energy Consumption and Cost
- 4.2 Unit Energy Costs
- 4.3 Plant Infrastructure and Utility Systems
- 4.4 Energy Distribution Systems
- 4.5 Manufacturing Processes, Technologies

5.0 DATA COLLECTION, FIELD WORK
- 5.1 Tour of Energy Systems
- 5.2 Tour of Process Technologies
- 5.3 Observations, Field Notes
- 5.4 Preliminary Identification of ECO's
- 5.5 Energy Measurements of ECO's

6.0 ENERGY ANALYSIS: SUPPLY, DISTRIBUTION, USERS
- 6.1 Pie Charts of Energy Supply and Cost
- 6.2 Unit Cost-Basis-of-Savings (CBOS)
- 6.3 One-Line Utility Balances
- 6.4 Block Process Flow Diagram (Technologies)
- 6.5 System Performance: Efficiency Plus Reliability
- 6.6 Non-Energy Issues: Constraints and Problems
- 6.7 Weakness Analysis

7.0 DEVELOPMENT OF RECOMMENDATIONS
- 7.1 Identifying Ideas to Save Energy (Brainstorming)
- 7.2 Converting Ideas into Recommendations (Economics)
- 7.3 Cost-to-Benefit Analysis (Simple Payback, ROI)
- 7.4 Selecting Leading Candidates (ROI, Risk, Fit)

256

8.0 IMPLEMENTATION PLAN
- 8.1 Responsibility for Results
- 8.2 Implementation Schedule

9.0 CLOSING MEETING WITH PLANT (Preliminary Results)
- 9.1 Presentation of Initial Findings
- 9.2 Major Recommendations with Preliminary Economics
- 9.3 Securing Management Commitment and Follow-up

10.0 APPENDICES
- 10.1 Data, Supporting Facts, Drawings, Specifications
- 10.2 Field Notes, Observations, Measurements
- 10.3 Equipment Lists for Procurement

257

USAID - ROMANIA
ENERGY EFFICIENCY MARKET DEVELOPMENT

ENERGY AUDIT ADVISORY REPORT
S.C. TERAPIA S.A.

prepared for:
S.C. ECO-ERG Technologie Service S.R.L.

prepared by:
Laurent Pommier
RCG/Hagler Bailly, Inc.

March 31, 1994

---

1. Activities

During our work together at Terapia on February 11 and March 17-18, 1994, we held interviews with the Technical Director, Energy Manager, and Chief of Boiler Houses, to review the plant's energy consumption, operations, and plans to institute separate energy profit centers. We inspected the boiler house, steam and hot water distributions systems, performed boiler testing measures, and evaluated sample steam traps. We reviewed the audit work you had performed so far, and discussed boiler house energy metering. We reached a preliminary agreement on equipment to be supplied and established preliminary specifications.

2. Background

Terapia should be congratulated for taking several steps recently to improve its operations, including:

- Plans to improve the product conditioning section
- Efforts to sub-meter electricity by section
- Willingness to contract with ECO-ERG for a comprehensive thermal audit

Terapia faces several energy-related problems and challenges:

- Natural gas supply problems, which force Terapia to shut-down some sections in the winter

- Lack of information on the energy cost of individual sections, which makes it harder to decide which section to shut down during gas shortage periods

- A history of unplanned, step-by-step development of the facilities, which resulted in complex and low efficiency energy systems

- Explosion-proof regulations that require many buildings to be entirely glazed, creating high space heating loads

- Large use of steam in reactors, which, with condensate pollution problems, renders a high percentage of the condensate unusable

3. Recommendations

Following are comments on the work done so far and on current equipment selection, as well as suggestions for additional areas to investigate.

3.1 Suggestions to Improve Plant Energy Management Methods

Improvements in energy management offer particularly important opportunities at Terapia, for several reasons:

- The plant is divided into several sections which are fairly independent from each other and offer good opportunities to bring the responsibility for energy conservation down from the plant level to the section level, closer to where actions can be taken.

- Mr. Mocan is particularly interested in establishing an energy accountability system, and seems to have enough influence to make such project successful.

- Information on product energy intensities would be helpful to manage gas shortages in an optimum manner.

- The production sections offer many energy savings opportunities with operations and maintenance actions that cannot be dictated once and for all by management, but need to be a continuous effort of the sections' staff.

Therefore, your report to Terapia should include specific recommendations to establish the right energy management structure to motivate each section to be continuously energy-aware. The potential results and cost-effectiveness of this issue justifies that you pay specific attention to it.

One suggestion would be to conduct your audit of the first units (thermal stations, distribution, and pantothenate sections) as planned, and then take a couple days to look beyond the technical aspects and into the management aspects of energy. Although you should have the full cooperation and approval of Mr. Mocan for that, you should make sure that you present your recommendations not just to him but also to Mr. Rusu and, if possible, to the General Manager. You should have a short written support to your presentation (2-3 pages), and plan your presentation to be short and structured, to give specific examples in terms of money, and to provide simple recommendations.

Specific money examples would show how big the potential savings of continuous operations and maintenance effort would be. For example:

- Estimate the number of failed steam traps in the pantothenate sections, and example of how much money is lost through a failed-open trap; estimate payback.
- Do the same type of example on piping insulation.
- Show how much money can be saved if steam valves are closed whenever a section or a piece of equipment is not used.
- Take a conservative estimate of how many percent of the total energy costs can be saved just by implementing no-cost measures (probably 3-5%) and show, on a large section, what the payback is on the installation of heat meters. Explain that this does not even take into account all the savings that the energy accountability system would generate through low-cost measures.

Specific recommendations could be:

- To install steam and gas metering in a boiler house and establish clear responsibility, with incentives, to lower the specific consumption.
- To conduct a similar test with one of the sections which uses the most energy.
- To use past records on electricity sub-metering and production logs to establish a baseline for each section of power versus production, and to create a competition between sections each month to see who reduces consumption the most compared to the baseline.

I suggest that you do this 'management reform' proposal after the audit of a few sections (to give you a better feel for the actual operations), but do not wait until the end of your work. Two reasons why you should not wait:

1) This will not be an overnight decision or change, and will need follow-up, better done while you're in the plant.

2) If Terapia is going to use most of the USAID equipment for metering, you should make sure that the management will have the will to implement a structure which will allow real actions to happen as a result of the metering.

A few comments regarding energy metering:

- Although electrical energy is not directly in the scope of your audit, I would strongly encourage you to investigate how the information from the electric sub-meters is collected, analyzed, and used to implement electricity saving actions. This would be a very good insight into the management and personnel issues that will affect the effectiveness of the planned thermal energy metering. Mr. Mocan says that the sections do not pay for their electricity consumption, and that there is no system of penalty or incentive in relation to electrical energy intensity. Why not? Why does he expect things to be different with thermal energy metering? Can the electrical metering equipment, already existing, be used to test a different energy accountability structure before expensive thermal meters are purchased?

- Similarly, how successful is the current system of penalties for raw material specific consumption?

- Because of the 4 bar steam distribution loop, it seems difficult to include the distribution losses with the sections. In general it would make more sense to make it the responsibility of the central energy section.

- Compared to the relatively high cost of some steam or gas meters, it may be useful to do small piping modifications in some places to make sure that a given meter measures all, and nothing but, the consumption it is supposed to track. This is especially true for gas.

- Condensate flow totalizing should not be forgotten. With a relatively low cost, this would be a good indicator of the condensate recovery efforts.

- If condensate recovery is made the responsibility of the production sections, and not the thermal stations, then, ideally, the heat contents of the pure and polluted condensate returned to the boiler houses should also be metered, with more value given to direct return than to the heat-exchanged polluted return (need for treatment and blowdown). This will probably be impractical but the plant should be aware of this issue in case a system of incentives and penalties is established.

- Similarly, in your report, you should also try to clearly summarize the issues associated with the steam consumption of the de-aerators and preheaters:
  - -- This steam should be not be metered as useful output of the thermal stations. Ideally, the steam meter should be located after the branching to the de-aerator and preheat and before any other branching (piping modifications?).
  - -- If not possible, a separate meter would probably not be cost-effective.

- If Terapia wants to monitor the specific consumption of each thermal station separately, then the piping link located between the outputs of the two CT1 de-aerators and the CT2 de-aerator should be normally closed. Would that be a problem or reduce efficiency?

- An alternative solution to the previous three points (•) would be to add two hot water energy meters on the feedwater main of each CT, but this would bring Terapia even further from the goal of monitoring the global efficiency of the whole activity of the thermal stations.

3.2 Suggestions to Improve the Operating Efficiency of Boiler Houses

- Using the combustion analyzer, the plant should adjust the mechanical air/gas ratio control system for various levels of gas supply pressure and make different marks for each plot corresponding to different gas pressures. This could allow the plant to frequently readjust the settings of the mechanical jackshaft system in function of the gas pressure without redoing complete boiler testing.

- Remind the plant that they have to be clear on where they calibrate the intake air temperature. The best way to do the measures is:
  - -- it should be downstream of the air preheat heat exchanger if they intend to measure the exhaust between the combustion chamber and the heat exchanger
  - -- it should be at the fresh air intake if they intend to measure the exhaust in the stack (usual way)

  You can monitor the infiltration happening the air-to-air heat exchanger by measuring the difference in oxygen content between the two sides of the exchanger on the exhaust.

- In the use of blowdown water analyzer, the operators should be aware that the goal is to be just below the limit.

3.3 Suggestions to Improve the Operating Efficiency of the Distribution System

- Terapia has been very successful in buying a dedicated warm air furnace for the atomizer of the pantothenate section, which uses much less gas than was previously required by the

262

corresponding distributed steam. Keep an eye open for such opportunities while you audit the sections, particularly in those located far away from the boiler houses.

- Make sure that steam lines are shut-off if all the users they served have been disconnected.

- Try to understand why Terapia reduces the steam pressure from 8 to 4 bars at the boiler house and then has to distribute 2 systems, instead of having only an 8 bar distribution system and reducing pressure at the sections. Was it to avoid the cost of one pressure reducing valve for each section? If so, then investigate the tradeoff between these costs and the cost of heat loss from the additional (4 bar) distribution system.

  If two distribution systems have to co-exist, you should make sure that this is done as efficiently as possible:
  -- Is the pressure reduction done as efficiently as possible? Any heat recovery possible?
  -- Could the CT1 boilers be derated to 4 bars to avoid any pressure reduction?

3.4 Suggestions to Improve the Operating Efficiency of Sections

These are general comments, as we did not spend a lot of time on the sections.

- Some sections seem to not even try to recover condensate because of the freeze problems that they experience during the winter. Possible solutions could include: improving insulation, increase recovery to the maximum to increase velocity, find a local usage for the condensate heat (still loosing on water treatment and blowdown).

- In the section we saw, none of the small steam lines were insulated.

- Do some sections close at night or on weekends, with no production? If so, is it possible to have a general steam valve to shut-off all the steam supply (except the heat, which would have to be upstream of this valve)?

- Ventilation heat recovery. First calculate how much money could ideally be saved, then see if that could possibly pay for an air-to-air heat exchanger. If yes, do detailed analysis. Also establish with the section chiefs what the minimum space temperature should be in winter (freeze, process, people...).

4. Next Steps

(See attached Equipment Procurement Procedure and Equipment Procurement Timetable.)

Meet with upper management to firm up their commitment to the energy metering effort.

Inform Hagler Bailly of any modifications in the specifications we discussed (attached is a copy of the technical specifications I sent to manufacturers). Hagler Bailly will get preliminary pricing so that we can finalize the equipment lists and get the plant's final approval on it.

Each item that is to be considered for USAID funding needs to be justified on a 'Recommended Action' form (part of 'English Energy Audit Report Prepared for USAID and RCG/Hagler Bailly').

Complete energy audit report to Terapia, according to terms of your contract.

USAID - ROMANIA
ENERGY EFFICIENCY MARKET DEVELOPMENT

ENERGY AUDIT ADVISORY REPORT
TIMPUR NOI

prepared for:
B.I.T.

prepared by:
Laurent Pommier
RCG/Hagler Bailly, Inc.

July 20, 1994

---

1. ACTIVITIES

During our work together at Timpur Noi on July 18-20, 1994, we held interviews with the General Manager, Chief Energy Engineer, and other plant technical staff to review the plant's energy consumption, operation and maintenance practices. We inspected the plant, paying special attention to the operation of the kilns, and to the potential for reducing electric demand charges. We also discussed possibilities for equipment procurement.

2. ELECTRIC RATE STRUCTURE / BASELINE CONSUMPTION

The principal elements of the electrical rate structure are as follows:

- On-peak and off-peak rates on energy (kWh)

- Demand is calculated on 15 minute demand intervals. These intervals are fixed (there is no sliding interval). There is no ratchet clause either (previous months do not affect the current month). There are two demand charges: plant maximum demand and plant demand during on-peak hours (during winter months).

  Note: It was not very clear whether the first demand charge (non on-peak demand) is the plant maximum demand, or the maximum demand during the off-peak hours. This is not crucial as it seems that the maximum demand always happens during the off-peak period, but that should nevertheless be clearly established.

265

- In winter months, a maximum demand limit is set by Renel. If the actual demand is above the demand limit, the demand above the limit is surcharged at 4 times the demand rate (being therefore billed at 5 times the rate).

  Notes: 1) It seemed that this limit applies to the on-peak demand, but that needs to be verified.
  2) It seemed that the plant does actually not have to pay the required surcharge. You should try to get a clear confirmation of that, as this significantly affects any savings calculations related to demand limiting.

- Power factor penalty or kVA billing: Timpur Noi does not pay such charges because its power factor (0.97) is above the minimum defined by Renel.

The on-peak periods are as follows, including on week-ends:

Month	Morning Peak	Evening Peak
January	7 - 9	17 -22
February	7 - 9	17 - 22
March	na	18 - 22
April	na	19 - 22
May	na	20 - 22
June	na	na
July	na	na
August	na	20 - 22
September	na	19 - 22
October	na	18 - 22
November	7 - 9	17 - 22
December	7 - 9	17 - 22

As of July 1994, the rates were the following:

	On-Peak	Off-Peak
lei / kWh	138.3	50
lei / kW	16102	6757.5

Elements of consumption baseline given by the plant

- Annual consumption: around 10,000 MWh, depending on yearly production. 1989: 11,345 MWh. 1993: 6,825 MWh
- Typical monthly maximum demand: 1800 - 2300 kW
- Typical monthly on-peak demand: 1000 - 1200 kW
- Typical week-end demand: 375 - 425 kW, sometimes more if kiln is used
- Typical week-end daily consumption: 8,000 - 12,000 kWh (333 - 417 kW average)
- Typical week-day consumption: 25,000 - 30,000 kWh (1041 - 1250 kW average)

The attached spreadsheet attempts to approximate the electric rate structure, as paid by Timpur Noi. To verify the annual bill, we have assumed the breakdown of on-peak and off-peak kWh indicated on top of the second page of the spreadsheet. The resulting estimated annual bill is approximately 750 million lei. This number is very different from the number that Mr. Calin had indicated on the original application (181 million lei for 6800 MWh in 1993), even if it is hard to judge the exact influence of inflation and big electric rate increases. When the figure of 750 million lei (an average of 107 lei /kWh) was mentioned to Mr. Calin, he said he thought it made sense, as his latest evaluation of the global price per kWh was 93 lei.

The conclusions are:

1) You need to review the actual billing data
2) Timpur Noi needs to improve metering, and independent logging of consumption and demand
3) The rate structure used on the attached spreadsheet is accurate enough to evaluate various energy and cost reduction measures.

The attached spreadsheet shows how much money is saved annually by saving 1 kW all the time, or by just clipping 1kW from the peak, without energy savings. It also shows a sample payback calculation for various measures.

3. FINDINGS / RECOMMENDATIONS

Following are comments on some of the findings, and suggestions for areas to investigate.

3.1 Energy Management Organization

- The energy department and its manager, Mr. Calin, do not have the authority to take actions that could affect consumption and demand. The role of the energy department is mostly limited to the analysis of consumption data, with not a lot of feedback to the production department.

- It would appear that Mr. Calin's influence is gradually declining. For example, there used to be quarterly meetings with production managers, where the energy department would present energy consumption statistics by section, but these meetings no longer take place. Also it seems that electric rate considerations are not taken into account in the scheduling of production as much as they used to be.

- A fair amount of energy information is logged, but it appears that it is not always the most crucial information, or that it is not synthesized in a way that provides meaningful indicators. For example, there are daily kWh statistics by shift, but seemingly no breakdown of on-peak and off-peak kW and kWh. Also, Timpur Noi seems to be keeping consumption statistics over 5-day periods, which sounds less logical than

267

weekly statistics.

Note: Take the time to review in detail what information is available to the energy department, what information is logged, and how. This exercise should be help you better define the requirements of the submetering / demand limiting system that you are planning on recommending. And, as this system would likely be computerized, you should start to think at what would be the best way for Timpur Noi to use this computer for energy data logging.

- You should recommend to management that energy consumption reports be regularly passed on to production managers, be analyzed, and target reductions be set.

- Timpur Noi gets kWh quotas each month from the Ministry. Timpur Noi staff then subtract what they normally spend on week-ends to calculate how much they can spend during each weekday.

  Note: You should use this situation to encourage the plant to reduce week-end consumption as much as possible. Week-end consumption corresponds mostly to the part of the plant consumption that is not related to production. If this part is minimized, that leaves a bigger portion of the quota to production-related activities.

3.2 Electrical - General

Electricity represents appears to represent around two thirds of Timpur Noi's energy costs. It is worth taking a comprehensive look at it. The methodology you will adopt for the electrical audit will have to be adapted to the scope and extent of the contract you have negotiated with Timpur Noi. Following are suggestions for an investigation plan designed to give you and the plant an accurate picture of the electrical consumption.

- Examine electric bills and / or contract to clearly establish the structure and the level of the electric rates, and confirm the preliminary information obtained (above).

- Obtain or sketch electrical distribution diagrams. Check if circuits of different voltages exist. Locate the power transformers and note their nominal ratings. Note the indications of any fixed amp-, volt-, and power factor (cos phi)- meters.

- Try and perform a balance of the electrical energy:
  - perform inventory of electricity-consuming equipment (motors, lighting...)
  - note to which circuit or transformer they are connected
  - note their nominal kW, if available
  - on appropriate loads, use clamp-on power factor meter to measure actual kW; keep an eye on particularly low power factor (cos phi)

- evaluate operating hours
- check the resulting kWh consumption against actual consumption.

Try to also analyze where the week-end electricity consumption comes from.

- Analyze if some of the load can be shed or shifted out of the peak hours.

- Try to see if the electrical distribution system is structured according to the production sections. If so, estimate how many submeters would be required to measure electricity consumption section by section.

- For each power transformer, compare the size of the connected load to the transformer rating. If some transformers are severely under-loaded, evaluate if loads can be regrouped.

- Investigate if other rates/structures would be available from Renel, even if it requires purchasing own transformer or meter.

  Calculate what the annual costs would be with these other rates, based on current electricity consumption.

3.3 Kiln

The kiln is obviously one of the biggest energy consumer, and the biggest contributor to electric demand. During our work at Timpur Noi, we did not have enough time to get into too much details. Items to investigate further:

- Check the temperature control system. How is temperature sensed? Is the induction current controlled automatically (plant staff first said yes, then somebody else said that the control was manual, with only an alarm on high temperature)? If there is a controller, is it working properly, with properly set parameters (for example, without too much dead-band)? How is the melting time determined? What sort of time optimization could be done?

- Is temperature recorded? If not, would a recorder provide information useful to reduce consumption / demand, improve quality, or reduce rejects?

- The plant used to use an optical pyrometer, but no longer does. Why have they stopped? What did they use it for? Were "dark spots" on the metal surface making it difficult to measure surface temperature. Discuss with the operators how good an indicator surface temperature is, and how it helps them control the kiln. Would technology such as fixed infrared thermometers with analog outputs enable better control of the temperature?

- The 1200 kVA are divided into ten steps. The first step is 120 kVA, and each increment is about 100 kW. In the heating mode, the kiln consumes around 700 kW. In the maintenance mode, the kiln uses 120 kW (1st step).

  It would seem that 100 kW increments are too big to optimally control temperature, especially in the maintenance mode. Maybe the maintenance mode requires only, say, 100 kW instead of 120 kW. If you confirm that this is a source of waste, try to examine the electric diagram for the three kiln transformers. Is there a possibility to provide more steps with the existing transformers? Could it be cost-effective, and operationally feasible, to install a second set of ten-step transformers so as to provide close to 100 steps? Or would regular, adjustable cycling between the steps be acceptable to the plant (so as not to create voltage variations in the rest of the plant) and to the kiln itself (longevity issues due to current and temperature variations)?

- The energy manager said that "technological actions" are possible to reduce the heating time on the kiln, but that disturbances in the work organization would gradually bring the situation "back to normal". Take the time to understand exactly what actions the plant can / used to take to reduce consumption, and why these efforts can not be maintained. Is it due to a lack of accountability or incentive for the workers or managers? Is it due to deficient equipment, lack of instrumentation, lack of record keeping capabilities...?

- Mr. Calin estimates that the reject rate may be up to 40%. If the rejects are due to bad practices in the molding area, that is probably outside the scope of your audit. The rejects may also be due to improper control of temperature or other kiln parameters (one area you could investigate is how fast the results of the sample tests are made available to the kiln staff, and corrections made). In any way, you should point out the direct influence of rejects on energy consumption. To illustrate that, you can for example, calculate an average kWh per kg of poured metal, or kWh per kilo of good product.

- The lid of the kiln is left open. The plant said that it would be dangerous to close it, due to gases. Investigate ways to reduce heat radiation from the top, while allowing proper gas venting.

- There is no preheating of materials put in the kiln, nor any heat recovery during the cooling phase of the molds.

- The water that cools the kiln walls leaves the kiln at 40 - 50 oC. Plant staff said that the design leaving temperature range is 40 - 80 oC. The cooling water then goes through cooling towers. Would there be any obstacles or drawbacks to reducing the flow of water so as to increase the leaving temperature closer to 80 oC? It would seem that increasing the leaving temperature could: 1) help reduce the thermal load on the kiln, 2) reduce the need to run fans in the cooling towers, or 3) make the heat content

270

of the water more usable for heat recovery. Is automatic water temperature control feasible?

- There is an electric meter for the kiln. Mr. Calin said that the meter shows "0" when the meter is in the maintenance mode, due to the inaccuracy of the meter. Check the meter and see how the information is logged (Mr. Calin had statistics on kiln kWh consumption per shift for a given day and on maximum kiln kW per day). Establish if the meter and logs are sufficient to record how the kiln load varies during the day, and evaluate by how much the plant reduced kiln usage during Renel on-peak hours.

- Try and evaluate the potential for load shifting on the kiln. Some of the elements to consider are:

  - When we inspected the kiln, the plant staff seemed to say that they were already close to full capacity. They said that the primary bottleneck was the number of pots and the speed of the transborder, but that, even if they could eliminate this bottleneck, they would not be able to increase the production by much, as the kiln itself was pretty close to capacity, and as the molding preparation department was also close to full capacity.

  - Where can buffers be established upstream and downstream of the kiln so that some load can be shifted on the kiln without shifting the whole plant?

3.4 Compressors

- Try to understand what are the pressure requirements of the different types of equipment of the plant, and how the compressed air pressure settings (7 bars) have been established. Ask the plant what would happen if they reduced the overall pressure settings. If some pieces of equipment in a given area do not need as much as 7 bars, maybe they can be fed at less than 7 bars by a separate compressor, with some minor repiping.

- On the other hand, the plant has two 300 kW and two 75 kW compressors operating at the same pressure (7 bars), but not on the same header. Mr. Calin says that it would be relatively easy to link the two headers. This would allow more flexibility in operating various combinations of compressors to try and achieve optimal efficiencies.

- Obtain, or draft, a compressed air line diagram, to see how the two headers could be connected, and if there would be one point where all the compressed air would be flowing and where a total plant air flow meter could be placed (the plant already has an orifice plate flow meter somewhere).

- The plant also has many small compressors. Try to identify them, and evaluate if the

271

whole system can be rationalized.

- Investigate what unloading mechanism the various compressors use (clearance pockets or cylinder unloading on reciprocating compressors, inlet valving, inlet guide vane, or discharge bypass on centrifugal compressors...). Different mechanisms offer different types of part-load efficiencies (see attached copy). If different compressors on the same header have different unloading mechanisms you can possibly adjust the pressure set-points of each one to make sure that the compressors that are the most inefficient at part load are used as base-load. One way to see how the compressors unload would be to look at the electric submeters that are already installed.

- Compressor energy consumption is reduced a bit when the air intake is located where air is as cool as possible, such as on the north side of a building.

- The compressors consume enough electricity to justify installing one electric sub-meter on each of them, as measuring the actual consumption would provide good feedback on the effort to eliminate compressed air leaks.

- At a time when the plant is stopped, you can test the amount of leakage in the system by measuring how much time it takes for the tanks to empty from the high pressure setting to the low pressure setting while no compressor runs. This time measurement can be also provide good feedback on the effort to eliminate compressed air leaks.

- Mr. Calin said that the compressors are not operated during the second shift. It seems that the rationale was demand-limiting. You could try to confirm the fact, and, if confirmed, investigate how the plant copes with the absence of air. This might give you insights on how to reduce compressor consumption, or do load shedding on the compressors.

- Similarly, I understood that Mr. Calin said that, during production, it takes half an hour for the tanks to empty from the high pressure to the low pressure setting. <u>If</u> it is verified that the plant can run for half an hour with the compressors not running, that would indicate that the capacity of the compressors is too big compared to the needs of the plant and, in that case, a few comments can be made:

    1) Electric demand from the compressors can be limited by:

        a) using a smaller combination of compressors, or partially unloaded compressors, over longer periods of time (this would be easier if the two headers are tied together), or by

        b) narrowing the gap between the high and low pressure setpoints so that the compressors cycle more frequently and so that, over 15 minutes intervals, the load averages out.

272

2) Narrowing the pressure "dead-band" by lowering the upper pressure limit would also reduce the average pressure while always maintaining pressure above the minimum required, thus reducing consumption. Of course the limit on how frequently the compressors can cycle is determined by the thermal characteristics of the motor.

3) Alternatively, when Timpur Noi implements a plant-wide demand limiting system, the possibility of keeping the compressors down for as much as half an hour can be used for short-term load shedding (20 minutes or so). One way to implement such strategy would be as follows: if the current pressure limits are L (low) and H (high), add two other limits in-between: l (medium low) and h (medium high); during low demand time, run the compressors between L and l; when demand goes up, or during Renel on-peak period, run the compressors between h and H, so that, when the plant demand hits the shedding level, the compressors are shut off, until pressure reaches L.

- Any load management effort on the compressors should take into account the fact that the synchronous motors of the 300 kW compressors are also used for power factor correction.

3.5 Cooling Towers

There is no automatic on/off temperature control on the cooling towers. Such device would not necessarily save energy but it would ensure that cooling water temperature stays within acceptable range. This could in turn insure proper performance of the compressors.

More aggressive conservation measures on the cooling towers could also include two-speed motors, adjustable speed drives, adjustable pitch fan blades, adjustable intake vanes, cold water bypass, or staging of cooling towers (if not already done). These measures would need to be carefully evaluated as the annual operating hours of the cooling towers are fairly low.

3.6 Motors

What you do on the motors will of course depend on the scope of the work you have negotiated with Timpur Noi. In order to optimize your time, you could do a preliminary evaluation of how much money can be saved annually, and what would be the payback, on a typical large motor, running at high operating hours, with high load factor, for the following measures:

1) Replacement of a severely under-loaded motor (less than 50%) with smaller motor.

273

2) Replacement of old belts with cogged V belts (up to 2% savings achievable).

3) Replacement with energy efficient motors, if available.

If the sample calculation for under-loaded motors show some possibilities, try to identify under-loaded motors by (by order of complexity):

- measuring cos phi: a low cos phi is a good diagnostic of under-loading
- comparing motor and load ratings (fan, pump)
- measuring amps and comparing to the nameplate amps
- measuring kW and comparing to the nameplate kW

3.7 Lighting

- Most of the lighting is fluorescent. It is possible to realize savings on fluorescent lighting by converting the fluorescent lighting system to high pressure sodium or to high efficiency fluorescent lighting, but these measures may not always be cost-effective. But the plant also has 500 W incandescent lamps and mercury vapor lamps that present very good savings opportunities.

  Example: 500 W incandescent converted to 150W high-pressure sodium (with an increase in light output) running 24 hours/day during the week saves 305 W: 1900 kWh/yr @ 6250 hr/yr: 196,000 lei/yr ($115/yr) @ July 1994 rates. This should produce an attractive payback at current Romanian prices for lighting equipment.

- I also suggest that you look at how much lighting is used on week-ends, and compare that to how much lighting you think would be enough to insure adequate security lighting. If there is a significant difference, that may justify rewiring the lighting system into two circuits: one for security / week-end activities, and one for full activity. Then, to insure that the lights are turned off, you may suggest to put one staff member in charge of turning the lights off, and to install an hour meter on the "full activity" circuit for verification.

3.8 Electrical Load Management Opportunities

In addition to the load shedding opportunities mentioned above (kiln, compressors), the following can be explored:

- ▸ It seems that the water tower belongs to Timpur Noi. If Timpur Noi also pays for any associated pumping and the pump is on the same electrical account as the rest of the plant, the 500 m3 capacity of the tower can possibly be used for short-term load shedding.

274

- Ventilation fans, including the 175 kW foundry fan.
- Individual machine tools. Some equipment is already turned off during plant peak (heat treatment, nitruration, large machine tools...)

4. EQUIPMENT SPECIFICATIONS

We discussed the following possibilities for equipment procurement:

- electric submetering system and/or demand limiting system.
- portable power recorder to measure the principal electric loads of the plants
- clamp-on power meter with power factor
- infrared pyrometer for the kiln
- infrared thermometer to check electrical contactors, especially for the power factor correction capacitor banks
- personal computer for energy data logging and analyzing
- ultrasonic probe for compressed air leaks
- compressed air flow meters
- 1 gas flow-meter, 1 steam meter, 1 hot water meter
- combustion analyzer

More details are given below on the electric submetering / demand-limiting system.

4.1 General Comments

The plant talked about demand monitoring, demand limiting, sub-metering, and data logging. Before you get into technical details, clearly establish the objectives. I would recommend the following:

- plant-wide demand monitoring
- portable load checking on major motors and loads to plan the load shedding strategy
- a few automatic control relays for load shedding
- some alarms for voluntary, manual load shedding
- a well designed but limited electric sub-metering
- automatic data logging and a reliable personal computer for trending and analysis

Mr. Calin indicated the following order of priority:

1) personal computer
2) alarm on total demand
3) submetering of sections
4) infrared thermometer

275

5) clamp-on power meter
6) alarms on sections
7) more points of sub-metering

4.2 Plant-Wide Monitoring

- In order to measure plant-wide demand, there are several possibilities to explore:
  - Pick-up an existing pulse output from Renel's meters
  - Install independent meters (if Renel accepts so)
  - Install independent meters on the low-voltage side of Renel's meters:
    - Put the current transformers (CT) around the secondary of the CT's of the existing meter
    - Take the low-voltage from Renel's meter transformer.

- Past experience with facility-wide metering projects in Eastern Europe has shown that it is critical to establish up-front if such metering can be acceptable to the utility. In many cases, the utility does not like the fact that the customer would verify the bills with its own meters. It is also important to find-out what type of certification / calibration will be required by agencies such as Board of Standards and the like...

- One substation we saw had four meters. Make sure you establish how many separate electric accounts Timpur Noi has, and how many utility meters there are.

- It will also be necessary to know when the demand intervals begin: Is there a pulse carried on the power lines that tell Renel meters when to start a new 15-minute demand interval, or is the system based on a clock?

- Is there a similar signal that switches the meters from on-peak to off-peak periods?

4.3 Sub-Metering

- There are 48 existing electric submeters (25 with pulse output, and 23 without). The data from the meters with pulse used to be logged in a "concentrator", which is no longer used. Understanding exactly why the concentrator is no longer used, and why the existing meters are not regularly read, can provide some valuable insight for the design of the new system.

- As much as possible, the sub-metering should be structured so that it provides information that corresponds to production sections. Try to also look at the steam and gas distribution network at the same time as you look at the electrical side, to make sure that the structure you choose on the electrical side is compatible with what can be

276

done (at a later date?) on the thermal side.

- Mr. Calin identified at least 6 sections (kiln, heat treatment, testing division, and 2 or 3 mechanical shops). There will probably need to be more than one meter per section but, to keep costs down and have a manageable quantity of information, the number of sub-metering points should be kept to a reasonable level. Mr. Calin mentioned that he would like to have 25 additional submeters, bringing the total to 73 meters! I think that 48 existing meters are more than enough (about 44 kW of demand per meter). I would recommend to try to see how the existing meters can best be relocated and reassigned

- What are the specifications of the existing sub-meters pulse outputs? What can be done to add pulse capability to the other meters? Get an inventory of the existing meters and of what they measure.

- Establish a map of the plant, and indicate the location of each required submeter. These should be grouped as much as possible. Check with the system vendor what is the maximum distance over which pulse output signals can be carried. If not all pulse signals can be "concentrated" into digital signals in the same control panel, then there will be a need for separate control modules throughout the plant. Preliminary findings show that PT1, PT3, and PTB could possibly be grouped together, while PT2 would probably need to be logged separately.

4.4 Data Logging

Try to establish with the plant what the best data logging format would be. This should not be too rigid, as the needs of the plant will change, and as the electric rate structure may change.

4.5 Preliminary specifications

We talked about the following specs:

<u>Inputs:</u>
2 Renel power inputs (verify that pulses)
1 Renel demand-interval synchronization signal (if available)
1 Renel on-peak period synchronization signal (if available)
Electric sub-meters inputs
Possible extensions to inputs from gas, and thermal energy meters

<u>On-line data logging</u>
15-minute demand data for main meters and submeters
Plant maximum demands for the month (both on-peak and off-peak)

<u>On-line outputs:</u>
Display instant kW
Display plant maximum demands for the month

277

Alarm and load control relays.

Personal computer — Trending by section, shift, week, month, year....
Calculation of costs...
Scheduling and optimization

To establish more complete specifications I suggest the following steps:

- Refine goals and overall specifications, including number of points
- Involve Mr. George Ciobanu, the computer expert of the plant.
- Get in touch with local vendors (see Honeywell card attached) to discuss preliminary proposals
- Transmit preliminary information to me. I would then transmit to you information on possible suitable control equipment, for you to finalize detailed specifications
- As far as current transformers (CTs), power transducers (PTs), relays, and contactors are concerned, I think that these should be bought in Romania, preferably by the plant. Buying these requires too much detailed information to buy these from the US, and it could be hard to find US-made equipment suitable for Romanian power standards. I am attaching a list of issues and questions to consider when specifying sensors ans actuators for a demand limiting system.

5. NEXT STEPS

- Based on further calculation of energy usage and potential savings, finalize the equipment lists, obtain preliminary approval from Timpur Noi, and provide specifications to Hagler Bailly. Lists will be finalized based on exact prices.

- Each item that is to be considered for USAID funding needs to be justified on a 'Recommended Action' form (part of 'English Energy Audit Report Prepared for USAID and RCG/Hagler Bailly').

- Prepare English Energy Audit Report to USAID and RCG/Hagler Bailly (set of forms already provided).

- Complete energy audit report to Timpur Noi, according to terms of your contract.

USAID - ROMANIA
ENERGY EFFICIENCY MARKET DEVELOPMENT

ENERGY AUDIT ADVISORY REPORT
TIMPUR NOI

prepared for:
B.I.T.

prepared by:
Laurent Pommier
RCG/Hagler Bailly, Inc.

July 20, 1994

---

1. ACTIVITIES

During our work together at Timpur Noi on July 18-20, 1994, we held interviews with the General Manager, Chief Energy Engineer, and other plant technical staff to review the plant's energy consumption, operation and maintenance practices. We inspected the plant, paying special attention to the operation of the kilns, and to the potential for reducing electric demand charges. We also discussed possibilities for equipment procurement.

2. ELECTRIC RATE STRUCTURE / BASELINE CONSUMPTION

The principal elements of the electrical rate structure are as follows:

- On-peak and off-peak rates on energy (kWh)

- Demand is calculated on 15 minute demand intervals. These intervals are fixed (there is no sliding interval). There is no ratchet clause either (previous months do not affect the current month). There are two demand charges: plant maximum demand and plant demand during on-peak hours (during winter months).

  Note: It was not very clear whether the first demand charge (non on-peak demand) is the plant maximum demand, or the maximum demand during the off-peak hours. This is not crucial as it seems that the maximum demand always happens during the off-peak period, but that should nevertheless be clearly established.

- In winter months, a maximum demand limit is set by Renel. If the actual demand is above the demand limit, the demand above the limit is surcharged at 4 times the demand rate (being therefore billed at 5 times the rate).

  Notes: 1) It seemed that this limit applies to the on-peak demand, but that needs to be verified.
  2) It seemed that the plant does actually not have to pay the required surcharge. You should try to get a clear confirmation of that, as this significantly affects any savings calculations related to demand limiting.

- Power factor penalty or kVA billing: Timpur Noi does not pay such charges because its power factor (0.97) is above the minimum defined by Renel.

The on-peak periods are as follows, including on week-ends:

Month	Morning Peak	Evening Peak
January	7 - 9	17 -22
February	7 - 9	17 - 22
March	na	18 - 22
April	na	19 - 22
May	na	20 - 22
June	na	na
July	na	na
August	na	20 - 22
September	na	19 - 22
October	na	18 - 22
November	7 - 9	17 - 22
December	7 - 9	17 - 22

As of July 1994, the rates were the following:

	On-Peak	Off-Peak
lei / kWh	138.3	50
lei / kW	16102	6757.5

Elements of consumption baseline given by the plant

- Annual consumption: around 10,000 MWh, depending on yearly production. 1989: 11,345 MWh. 1993: 6,825 MWh
- Typical monthly maximum demand: 1800 - 2300 kW
- Typical monthly on-peak demand: 1000 - 1200 kW
- Typical week-end demand: 375 - 425 kW, sometimes more if kiln is used
- Typical week-end daily consumption: 8,000 - 12,000 kWh (333 - 417 kW average)
- Typical week-day consumption: 25,000 - 30,000 kWh (1041 - 1250 kW average)

280

The attached spreadsheet attempts to approximate the electric rate structure, as paid by Timpur Noi. To verify the annual bill, we have assumed the breakdown of on-peak and off-peak kWh indicated on top of the second page of the spreadsheet. The resulting estimated annual bill is approximately 750 million lei. This number is very different from the number that Mr. Calin had indicated on the original application (181 million lei for 6800 MWh in 1993), even if it is hard to judge the exact influence of inflation and big electric rate increases. When the figure of 750 million lei (an average of 107 lei /kWh) was mentioned to Mr. Calin, he said he thought it made sense, as his latest evaluation of the global price per kWh was 93 lei.

The conclusions are:

1) You need to review the actual billing data
2) Timpur Noi needs to improve metering, and independent logging of consumption and demand
3) The rate structure used on the attached spreadsheet is accurate enough to evaluate various energy and cost reduction measures.

The attached spreadsheet shows how much money is saved annually by saving 1 kW all the time, or by just clipping 1kW from the peak, without energy savings. It also shows a sample payback calculation for various measures.

3. FINDINGS / RECOMMENDATIONS

Following are comments on some of the findings, and suggestions for areas to investigate.

3.1 Energy Management Organization

- The energy department and its manager, Mr. Calin, do not have the authority to take actions that could affect consumption and demand. The role of the energy department is mostly limited to the analysis of consumption data, with not a lot of feedback to the production department.

- It would appear that Mr. Calin's influence is gradually declining. For example, there used to be quarterly meetings with production managers, where the energy department would present energy consumption statistics by section, but these meetings no longer take place. Also it seems that electric rate considerations are not taken into account in the scheduling of production as much as they used to be.

- A fair amount of energy information is logged, but it appears that it is not always the most crucial information, or that it is not synthesized in a way that provides meaningful indicators. For example, there are daily kWh statistics by shift, but seemingly no breakdown of on-peak and off-peak kW and kWh. Also, Timpur Noi seems to be keeping consumption statistics over 5-day periods, which sounds less logical than

281

weekly statistics.

Note: Take the time to review in detail what information is available to the energy department, what information is logged, and how. This exercise should be help you better define the requirements of the submetering / demand limiting system that you are planning on recommending. And, as this system would likely be computerized, you should start to think at what would be the best way for Timpur Noi to use this computer for energy data logging.

- You should recommend to management that energy consumption reports be regularly passed on to production managers, be analyzed, and target reductions be set.

- Timpur Noi gets kWh quotas each month from the Ministry. Timpur Noi staff then subtract what they normally spend on week-ends to calculate how much they can spend during each weekday.

  Note: You should use this situation to encourage the plant to reduce week-end consumption as much as possible. Week-end consumption corresponds mostly to the part of the plant consumption that is not related to production. If this part is minimized, that leaves a bigger portion of the quota to production-related activities.

3.2 Electrical - General

Electricity represents appears to represent around two thirds of Timpur Noi's energy costs. It is worth taking a comprehensive look at it. The methodology you will adopt for the electrical audit will have to be adapted to the scope and extent of the contract you have negotiated with Timpur Noi. Following are suggestions for an investigation plan designed to give you and the plant an accurate picture of the electrical consumption.

- Examine electric bills and / or contract to clearly establish the structure and the level of the electric rates, and confirm the preliminary information obtained (above).

- Obtain or sketch electrical distribution diagrams. Check if circuits of different voltages exist. Locate the power transformers and note their nominal ratings. Note the indications of any fixed amp-, volt-, and power factor (cos phi)- meters.

- Try and perform a balance of the electrical energy:
  - perform inventory of electricity-consuming equipment (motors, lighting...)
  - note to which circuit or transformer they are connected
  - note their nominal kW, if available
  - on appropriate loads, use clamp-on power factor meter to measure actual kW; keep an eye on particularly low power factor (cos phi)

282

- evaluate operating hours
- check the resulting kWh consumption against actual consumption.

Try to also analyze where the week-end electricity consumption comes from.

- Analyze if some of the load can be shed or shifted out of the peak hours.

- Try to see if the electrical distribution system is structured according to the production sections. If so, estimate how many submeters would be required to measure electricity consumption section by section.

- For each power transformer, compare the size of the connected load to the transformer rating. If some transformers are severely under-loaded, evaluate if loads can be regrouped.

- Investigate if other rates/structures would be available from Renel, even if it requires purchasing own transformer or meter.

  Calculate what the annual costs would be with these other rates, based on current electricity consumption.

3.3 Kiln

The kiln is obviously one of the biggest energy consumer, and the biggest contributor to electric demand. During our work at Timpur Noi, we did not have enough time to get into too much details. Items to investigate further:

- Check the temperature control system. How is temperature sensed? Is the induction current controlled automatically (plant staff first said yes, then somebody else said that the control was manual, with only an alarm on high temperature)? If there is a controller, is it working properly, with properly set parameters (for example, without too much dead-band)? How is the melting time determined? What sort of time optimization could be done?

- Is temperature recorded? If not, would a recorder provide information useful to reduce consumption / demand, improve quality, or reduce rejects?

- The plant used to use an optical pyrometer, but no longer does. Why have they stopped? What did they use it for? Were "dark spots" on the metal surface making it difficult to measure surface temperature. Discuss with the operators how good an indicator surface temperature is, and how it helps them control the kiln. Would technology such as fixed infrared thermometers with analog outputs enable better control of the temperature?

- The 1200 kVA are divided into ten steps. The first step is 120 kVA, and each increment is about 100 kW. In the heating mode, the kiln consumes around 700 kW. In the maintenance mode, the kiln uses 120 kW (1st step).

  It would seem that 100 kW increments are too big to optimally control temperature, especially in the maintenance mode. Maybe the maintenance mode requires only, say, 100 kW instead of 120 kW. If you confirm that this is a source of waste, try to examine the electric diagram for the three kiln transformers. Is there a possibility to provide more steps with the existing transformers? Could it be cost-effective, and operationally feasible, to install a second set of ten-step transformers so as to provide close to 100 steps? Or would regular, adjustable cycling between the steps be acceptable to the plant (so as not to create voltage variations in the rest of the plant) and to the kiln itself (longevity issues due to current and temperature variations)?

- The energy manager said that "technological actions" are possible to reduce the heating time on the kiln, but that disturbances in the work organization would gradually bring the situation "back to normal". Take the time to understand exactly what actions the plant can / used to take to reduce consumption, and why these efforts can not be maintained. Is it due to a lack of accountability or incentive for the workers or managers? Is it due to deficient equipment, lack of instrumentation, lack of record keeping capabilities...?

- Mr. Calin estimates that the reject rate may be up to 40%. If the rejects are due to bad practices in the molding area, that is probably outside the scope of your audit. The rejects may also be due to improper control of temperature or other kiln parameters (one area you could investigate is how fast the results of the sample tests are made available to the kiln staff, and corrections made). In any way, you should point out the direct influence of rejects on energy consumption. To illustrate that, you can for example, calculate an average kWh per kg of poured metal, or kWh per kilo of good product.

- The lid of the kiln is left open. The plant said that it would be dangerous to close it, due to gases. Investigate ways to reduce heat radiation from the top, while allowing proper gas venting.

- There is no preheating of materials put in the kiln, nor any heat recovery during the cooling phase of the molds.

- The water that cools the kiln walls leaves the kiln at 40 - 50 oC. Plant staff said that the design leaving temperature range is 40 - 80 oC. The cooling water then goes through cooling towers. Would there be any obstacles or drawbacks to reducing the flow of water so as to increase the leaving temperature closer to 80 oC? It would seem that increasing the leaving temperature could: 1) help reduce the thermal load on the kiln, 2) reduce the need to run fans in the cooling towers, or 3) make the heat content of the

water more usable for heat recovery. Is automatic water temperature control feasible?

- There is an electric meter for the kiln. Mr. Calin said that the meter shows "0" when the meter is in the maintenance mode, due to the inaccuracy of the meter. Check the meter and see how the information is logged (Mr. Calin had statistics on kiln kWh consumption per shift for a given day and on maximum kiln kW per day). Establish if the meter and logs are sufficient to record how the kiln load varies during the day, and evaluate by how much the plant reduced kiln usage during Renel on-peak hours.

- Try and evaluate the potential for load shifting on the kiln. Some of the elements to consider are:

  - When we inspected the kiln, the plant staff seemed to say that they were already close to full capacity. They said that the primary bottleneck was the number of pots and the speed of the transborder, but that, even if they could eliminate this bottleneck, they would not be able to increase the production by much, as the kiln itself was pretty close to capacity, and as the molding preparation department was also close to full capacity.

  - Where can buffers be established upstream and downstream of the kiln so that some load can be shifted on the kiln without shifting the whole plant?

3.4 Compressors

- Try to understand what are the pressure requirements of the different types of equipment of the plant, and how the compressed air pressure settings (7 bars) have been established. Ask the plant what would happen if they reduced the overall pressure settings. If some pieces of equipment in a given area do not need as much as 7 bars, maybe they can be fed at less than 7 bars by a separate compressor, with some minor repiping.

- On the other hand, the plant has two 300 kW and two 75 kW compressors operating at the same pressure (7 bars), but not on the same header. Mr. Calin says that it would be relatively easy to link the two headers. This would allow more flexibility in operating various combinations of compressors to try and achieve optimal efficiencies.

- Obtain, or draft, a compressed air line diagram, to see how the two headers could be connected, and if there would be one point where all the compressed air would be flowing and where a total plant air flow meter could be placed (the plant already has an orifice plate flow meter somewhere).

- The plant also has many small compressors. Try to identify them, and evaluate if the whole system can be rationalized.

285

- Investigate what unloading mechanism the various compressors use (clearance pockets or cylinder unloading on reciprocating compressors, inlet valving, inlet guide vane, or discharge bypass on centrifugal compressors...). Different mechanisms offer different types of part-load efficiencies (see attached copy). If different compressors on the same header have different unloading mechanisms you can possibly adjust the pressure set-points of each one to make sure that the compressors that are the most inefficient at part load are used as base-load. One way to see how the compressors unload would be to look at the electric submeters that are already installed.

- Compressor energy consumption is reduced a bit when the air intake is located where air is as cool as possible, such as on the north side of a building.

- The compressors consume enough electricity to justify installing one electric sub-meter on each of them, as measuring the actual consumption would provide good feedback on the effort to eliminate compressed air leaks.

- At a time when the plant is stopped, you can test the amount of leakage in the system by measuring how much time it takes for the tanks to empty from the high pressure setting to the low pressure setting while no compressor runs. This time measurement can be also provide good feedback on the effort to eliminate compressed air leaks.

- Mr. Calin said that the compressors are not operated during the second shift. It seems that the rationale was demand-limiting. You could try to confirm the fact, and, if confirmed, investigate how the plant copes with the absence of air. This might give you insights on how to reduce compressor consumption, or do load shedding on the compressors.

- Similarly, I understood that Mr. Calin said that, during production, it takes half an hour for the tanks to empty from the high pressure to the low pressure setting. If it is verified that the plant can run for half an hour with the compressors not running, that would indicate that the capacity of the compressors is too big compared to the needs of the plant and, in that case, a few comments can be made:

    1) Electric demand from the compressors can be limited by:

        a) using a smaller combination of compressors, or partially unloaded compressors, over longer periods of time (this would be easier if the two headers are tied together), or by

        b) narrowing the gap between the high and low pressure setpoints so that the compressors cycle more frequently and so that, over 15 minutes intervals, the load averages out.

    2) Narrowing the pressure "dead-band" by lowering the upper pressure

286

limit would also reduce the average pressure while always maintaining pressure above the minimum required, thus reducing consumption. Of course the limit on how frequently the compressors can cycle is determined by the thermal characteristics of the motor.

3) Alternatively, when Timpur Noi implements a plant-wide demand limiting system, the possibility of keeping the compressors down for as much as half an hour can be used for short-term load shedding (20 minutes or so). One way to implement such strategy would be as follows: if the current pressure limits are L (low) and H (high), add two other limits in-between: l (medium low) and h (medium high); during low demand time, run the compressors between L and l; when demand goes up, or during Renel on-peak period, run the compressors between h and H, so that, when the plant demand hits the shedding level, the compressors are shut off, until pressure reaches L.

- Any load management effort on the compressors should take into account the fact that the synchronous motors of the 300 kW compressors are also used for power factor correction.

3.5 Cooling Towers

There is no automatic on/off temperature control on the cooling towers. Such device would not necessarily save energy but it would ensure that cooling water temperature stays within acceptable range. This could in turn insure proper performance of the compressors.

More aggressive conservation measures on the cooling towers could also include two-speed motors, adjustable speed drives, adjustable pitch fan blades, adjustable intake vanes, cold water bypass, or staging of cooling towers (if not already done). These measures would need to be carefully evaluated as the annual operating hours of the cooling towers are fairly low.

3.6 Motors

What you do on the motors will of course depend on the scope of the work you have negotiated with Timpur Noi. In order to optimize your time, you could do a preliminary evaluation of how much money can be saved annually, and what would be the payback, on a typical large motor, running at high operating hours, with high load factor, for the following measures:

1) Replacement of a severely under-loaded motor (less than 50%) with smaller motor.

2) Replacement of old belts with cogged V belts (up to 2% savings achievable).

287

3) Replacement with energy efficient motors, if available.

If the sample calculation for under-loaded motors show some possibilities, try to identify under-loaded motors by (by order of complexity):

- measuring cos phi: a low cos phi is a good diagnostic of under-loading
- comparing motor and load ratings (fan, pump)
- measuring amps and comparing to the nameplate amps
- measuring kW and comparing to the nameplate kW

3.7 Lighting

- Most of the lighting is fluorescent. It is possible to realize savings on fluorescent lighting by converting the fluorescent lighting system to high pressure sodium or to high efficiency fluorescent lighting, but these measures may not always be cost-effective. But the plant also has 500 W incandescent lamps and mercury vapor lamps that present very good savings opportunities.

  Example: 500 W incandescent converted to 150W high-pressure sodium (with an increase in light output) running 24 hours/day during the week saves 305 W: 1900 kWh/yr @ 6250 hr/yr: 196,000 lei/yr ($115/yr) @ July 1994 rates. This should produce an attractive payback at current Romanian prices for lighting equipment.

- I also suggest that you look at how much lighting is used on week-ends, and compare that to how much lighting you think would be enough to insure adequate security lighting. If there is a significant difference, that may justify rewiring the lighting system into two circuits: one for security / week-end activities, and one for full activity. Then, to insure that the lights are turned off, you may suggest to put one staff member in charge of turning the lights off, and to install an hour meter on the "full activity" circuit for verification.

3.8 Electrical Load Management Opportunities

In addition to the load shedding opportunities mentioned above (kiln, compressors), the following can be explored:

- It seems that the water tower belongs to Timpur Noi. If Timpur Noi also pays for any associated pumping and the pump is on the same electrical account as the rest of the plant, the 500 m3 capacity of the tower can possibly be used for short-term load shedding.

- Ventilation fans, including the 175 kW foundry fan.

288

- Individual machine tools. Some equipment is already turned off during plant peak (heat treatment, nitruration, large machine tools...)

4. EQUIPMENT SPECIFICATIONS

We discussed the following possibilities for equipment procurement:

- electric submetering system and/or demand limiting system.
- portable power recorder to measure the principal electric loads of the plants
- clamp-on power meter with power factor
- infrared pyrometer for the kiln
- infrared thermometer to check electrical contactors, especially for the power factor correction capacitor banks
- personal computer for energy data logging and analyzing
- ultrasonic probe for compressed air leaks
- compressed air flow meters
- 1 gas flow-meter, 1 steam meter, 1 hot water meter
- combustion analyzer

More details are given below on the electric submetering / demand-limiting system.

4.1 General Comments

The plant talked about demand monitoring, demand limiting, sub-metering, and data logging. Before you get into technical details, clearly establish the objectives. I would recommend the following:

- plant-wide demand monitoring
- portable load checking on major motors and loads to plan the load shedding strategy
- a few automatic control relays for load shedding
- some alarms for voluntary, manual load shedding
- a well designed but limited electric sub-metering
- automatic data logging and a reliable personal computer for trending and analysis

Mr. Calin indicated the following order of priority:

1) personal computer
2) alarm on total demand
3) submetering of sections
4) infrared thermometer
5) clamp-on power meter
6) alarms on sections

269

7) more points of sub-metering

4.2 Plant-Wide Monitoring

- In order to measure plant-wide demand, there are several possibilities to explore:
  - Pick-up an existing pulse output from Renel's meters
  - Install independent meters (if Renel accepts so)
  - Install independent meters on the low-voltage side of Renel's meters:
    - Put the current transformers (CT) around the secondary of the CT's of the existing meter
    - Take the low-voltage from Renel's meter transformer.

- Past experience with facility-wide metering projects in Eastern Europe has shown that it is critical to establish up-front if such metering can be acceptable to the utility. In many cases, the utility does not like the fact that the customer would verify the bills with its own meters. It is also important to find-out what type of certification / calibration will be required by agencies such as Board of Standards and the like...

- One substation we saw had four meters. Make sure you establish how many separate electric accounts Timpur Noi has, and how many utility meters there are.

- It will also be necessary to know when the demand intervals begin: Is there a pulse carried on the power lines that tell Renel meters when to start a new 15-minute demand interval, or is the system based on a clock?

- Is there a similar signal that switches the meters from on-peak to off-peak periods?

4.3 Sub-Metering

- There are 48 existing electric submeters (25 with pulse output, and 23 without). The data from the meters with pulse used to be logged in a concentrator , which is no longer used. Understanding exactly why the concentrator is no longer used, and why the existing meters are not regularly read, can provide some valuable insight for the design of the new system.

- As much as possible, the sub-metering should be structured so that it provides information that corresponds to production sections. Try to also look at the steam and gas distribution network at the same time as you look at the electrical side, to make sure that the structure you choose on the electrical side is compatible with what can be done (at a later date?) on the thermal side.

240

- Mr. Calin identified at least 6 sections (kiln, heat treatment, testing division, and 2 or 3 mechanical shops). There will probably need to be more than one meter per section but, to keep costs down and have a manageable quantity of information, the number of sub-metering points should be kept to a reasonable level. Mr. Calin mentioned that he would like to have 25 additional submeters, bringing the total to 73 meters! I think that 48 existing meters are more than enough (about 44 kW of demand per meter). I would recommend to try to see how the existing meters can best be relocated and reassigned

- What are the specifications of the existing sub-meters pulse outputs? What can be done to add pulse capability to the other meters? Get an inventory of the existing meters and of what they measure.

- Establish a map of the plant, and indicate the location of each required submeter. These should be grouped as much as possible. Check with the system vendor what is the maximum distance over which pulse output signals can be carried. If not all pulse signals can be concentrated into digital signals in the same control panel, then there will be a need for separate control modules throughout the plant. Preliminary findings show that PT1, PT3, and PTB could possibly be grouped together, while PT2 would probably need to be logged separately.

4.4 Data Logging

Try to establish with the plant what the best data logging format would be. This should not be too rigid, as the needs of the plant will change, and as the electric rate structure may change.

4.5 Preliminary specifications

We talked about the following specs:

Inputs:	2 Renel power inputs (verify that pulses) 1 Renel demand-interval synchronization signal (if available) 1 Renel on-peak period synchronization signal (if available) Electric sub-meters inputs Possible extensions to inputs from gas, and thermal energy meters
On-line data logging	15-minute demand data for main meters and submeters Plant maximum demands for the month (both on-peak and off-peak)
On-line outputs:	Display instant kW Display plant maximum demands for the month Alarm and load control relays.

291

Personal computer — Trending by section, shift, week, month, year....
Calculation of costs...
Scheduling and optimization

To establish more complete specifications I suggest the following steps:

- Refine goals and overall specifications, including number of points
- Involve Mr. George Ciobanu, the computer expert of the plant.
- Get in touch with local vendors (see Honeywell card attached) to discuss preliminary proposals
- Transmit preliminary information to me. I would then transmit to you information on possible suitable control equipment, for you to finalize detailed specifications
- As far as current transformers (CTs), power transducers (PTs), relays, and contactors are concerned, I think that these should be bought in Romania, preferably by the plant. Buying these requires too much detailed information to buy these from the US, and it could be hard to find US-made equipment suitable for Romanian power standards. I am attaching a list of issues and questions to consider when specifying sensors ans actuators for a demand limiting system.

5. NEXT STEPS

- Based on further calculation of energy usage and potential savings, finalize the equipment lists, obtain preliminary approval from Timpur Noi, and provide specifications to Hagler Bailly. Lists will be finalized based on exact prices.

- Each item that is to be considered for USAID funding needs to be justified on a 'Recommended Action' form (part of 'English Energy Audit Report Prepared for USAID and RCG/Hagler Bailly').

- Prepare English Energy Audit Report to USAID and RCG/Hagler Bailly (set of forms already provided).

- Complete energy audit report to Timpur Noi, according to terms of your contract.

292

TIMPUR NOI: ELECTRIC SAVINGS POTENTIAL

annual hours (source: rate structure)

15.97%	of annual hours are on-peak
84.03%	of annual hours are off-peak
1,399	annual hours are on-peak
7,361	annual hours are off-peak
999	annual week-day hours are on-peak
5,258	annual week-day hours are off-peak

ESTIMATION OF TOTAL BILL>>

	lei / kW	lei / kW	lei / kW
lei/...	27030	16102	6757.5
# months	*12*	*10*	*12*

lei / kWh	lei / kWh
50	138

	Above Renel limit kW	Renel peak kW	plant peak kW	off-peak hours	on-peak hours	off-peak kWh	on-peak kWh	total kWh
Annual Bill	0	1000	2100			6,256,708	739,560	6,996,268

BREAKDOWN OF SAVINGS POTENTIAL>>>>>>>> >>

	Reduced load kW	Above Renel limit months	Renel peak months	plant peak months	off-peak hours	on-peak hours	off-peak kWh	on-peak kWh	total kWh
IF ABOVE RENEL LIMIT									
1 kW saved throughout the weekdays	1	10	10	12			5,258	999	6,257
1 kW saved throughout the week	1	10	10	12			7,361	1,399	8,760
1 kW shaved from the plant peak only	1	0	0	12			0	0	0
1kW shaved from both plant peak and Renel peak	1	10	10	12			0	0	0
IF UNDER RENEL LIMIT *(or penalty not paid)*									
1 kW saved throughout the weekdays	1	0	10	12			5,258	999	6,257
1 kW saved throughout the week	1	0	10	12			7,361	1,399	8,760
1 kW shaved from the plant peak only	1	0	0	12			0	0	0
1kW shaved from both plant peak and Renel peak	1	0	10	12			0	0	0
1 kW shaved from the Renel peak only	1	0	10	0			0	0	0

MEASURES>>>>>>>>>>>>>>>>>>>>>>>>>>>>>>> >>>

	load kW	Above Renel limit months	Renel peak months	plant peak months	off-peak hours	on-peak hours	off-peak kWh	on-peak kWh	total kWh
IF UNDER RENEL LIMIT (or penalty not paid)									
500 incandescent to 100 hps (on weekend)	0.365	0	10	12	7,361	1,399	2,687	511	3,197
500 incandescent to 100 hps (off weekend)	0.365	0	10	12	5,258	999	1,919	365	2,284
500 incandescent to 100 hps (off day)	0.365	0	10	12	2,629	500	960	182	1,142
10kW saved on kiln maintenance power level	10	0	10	4	5,784	1,399	57,835	13,992	71,827
autom temp control on cooling towers	15	0	0	0	434	82	6,506	1,237	7,743
temp+load oncooling towers	15	0	0	2	434	82	6,506	1,237	7,743
downsize foundry fan	7.5	0	10	12	5,258	999	39,433	7,496	46,929
2-speed foundry fan (additional)	40	0	10	12	789	999	31,546	39,976	71,523
TOTAL foundry fan							70,979	47,472	118,451
load control system	50	0	10	12	0	0	0	0	0

TIMPUR NOI: ELECTRIC SAVINGS POTENTIAL

Rough Breakdown	average kW			annual kWh		
	on-peak	off-peak	average	on-peak	off-peak	total
week-end	350	350	350			
weekday	600	1050	978.125			
annual	528.5714	850	798.6607	739,560	6,256,708	6,996,268

ESTIMATION OF TOTAL BILL>>>

VAT	lei / $
1.18	1680

	Renel limit 10^6 lei	Renel peak 10^6 lei	plant peak 10^6 lei	off-peak 10^6 lei	on-peak 10^6 lei	total 10^6 lei	total+VAT 10^6 lei	total+VAT $	Renel lim %	Renel pe %	plant pea %	off-peak %	on-peak %	total %
Annual Bill	0.000	161.020	170.289	312.835	102.281	**746.425**	880.7821	$524,275	0%	22%	23%	42%	14%	100%

BREAKDOWN OF SAVINGS POTENTIAL>>

	Renel limit 10^6 lei	Renel peak 10^6 lei	plant peak 10^6 lei	off-peak 10^6 lei	on-peak 10^6 lei	total 10^6 lei	total+VAT 10^6 lei	total+VAT $	Renel lim %	Renel pe %	plant pea %	off-peak %	on-peak %	total %
IF ABOVE RENEL LIMIT														
1 kW saved throughout the weekdays	0.270	0.161	0.081	0.263	0.138	0.914	1.077947	**$642**	30%	18%	9%	29%	15%	100%
1 kW saved throughout the week	0.270	0.161	0.081	0.368	0.194	1.074	1.267269	**$754**	25%	15%	8%	34%	18%	100%
1 kW shaved from the plant peak only	0.000	0.000	0.081	0.000	0.000	0.081	0.095686	**$57**	0%	0%	100%	0%	0%	100%
1kW shaved from both plant peak and Renel peak	0.270	0.161	0.081	0.000	0.000	0.512	0.604644	**$360**	53%	31%	16%	0%	0%	100%
IF UNDER RENEL LIMIT (or penalty not paid)														
1 kW saved throughout the weekdays	0.000	0.161	0.081	0.263	0.138	0.643	0.758993	**$452**	0%	25%	13%	41%	21%	100%
1 kW saved throughout the week	0.000	0.161	0.081	0.368	0.194	0.804	0.948315	**$564**	0%	20%	10%	46%	24%	100%
1 kW shaved from the plant peak only	0.000	0.000	0.081	0.000	0.000	0.081	0.095686	**$57**	0%	0%	100%	0%	0%	100%
1kW shaved from both plant peak and Renel peak	0.000	0.161	0.081	0.000	0.000	0.242	0.28569	**$170**	0%	67%	33%	0%	0%	100%
1 kW shaved from the Renel peak only	0.000	0.161	0.000	0.000	0.000	0.161	0.190004	**$113**	0%	100%	0%	0%	0%	100%

MEASURES>>

	Renel limit 10^6 lei	Renel peak 10^6 lei	plant peak 10^6 lei	off-peak 10^6 lei	on-peak 10^6 lei	total 10^6 lei	total+VAT 10^6 lei	total+VAT $	measure cost w/o VAT	Payback yrs w/ VAT 1.18
IF UNDER RENEL LIMIT (or penalty not paid)										
500 incandescent to 100 hps (on weekend)	0.000	0.059	0.030	0.134	0.071	0.293	0.346135	$206	$200	**1.15**
500 incandescent to 100 hps (off weekend)	0.000	0.059	0.030	0.096	0.050	0.235	0.277033	$165	$200	**1.43**
500 incandescent to 100 hps (off day)	0.000	0.059	0.030	0.048	0.025	0.162	0.190655	$113	$200	**2.08**
10kW saved on kiln maintenance power level	0.000	1.610	0.270	2.892	1.935	6.707	7.914618	$4,711	$12,000	**3.01**
autom temp control on cooling towers	0.000	0.000	0.000	0.325	0.171	0.496	0.585713	$349	$750	**2.54**
temp+load oncooling towers	0.000	0.000	0.203	0.325	0.171	0.699	0.824928	$491	$1,250	**3.00**
downsize foundry fan	0.000	1.208	0.608	1.972	1.037	4.824	5.692449	$3,388	$5,000	**1.74**
2-speed foundry fan (additional)	0.000	6.441	3.244	1.577	5.529	16.790	19.81271	$11,793	$4,000	**0.40**
TOTAL foundry fan	0.000	7.648	3.852	3.549	6.565	21.615	25.505	$15,182	$9,000	**0.70**
load control system	0.000	8.051	4.055	0.000	0.000	12.106	14.28449	$8,503	$12,000	**1.67**

Demand Control

kW reading

2 incoming lines: 1 or 2 existing meters? If 1 meter, measures both lines?

Any pulse output?
- If yes: - 1 pulse= ? kWh
  - (electrical rating of the pulse??)
- If no: - how many existing CTs?
  - CT transformer ratio? (200/5 A?)
  - Amp rating of lines?
  - how many PTs?
  - PT output: 10kV or stepped-down? stepped to what voltage?
    (I doubt the meter takes the 10kV direct...)

kW setpoint setting

1 demand limit enough?
(Honeywell W7600 has two demand limit setpoints, selectable based on input or on time of day)

Background on relays

On existing contactors, the number of control signals per motor is:

	1-speed	2-speed
electrically held contactor:	1	2
mechanically held contactor:	2	4

(with proper relays, the number of inputs to mechanically held contactors can probably be cut in half)

A single dry contact output of the controller can probably control several motors (1-speed), if they can be put on the same schedule: this way, the number of EMS points would depend only on the number of sheddable groups.

Honeywell recommends to have one input per motor, to give the actual status of the application: CT on one motor leg, or signal through auxiliary contact of starter.

Questions for each motor, or other sheddable load

Load type: inductive? resistive? tungsten (incl. incandescent)?
3-phase? 380 V?

kW?
Full load Amps?
If motor: 1-speed, 2-speed?
Locked Rotor Amps?

Can this motor be grouped with others into a single shed group?
If yes, is there already one control signal common to all of them?
Ratings of the corresponding relay (see below)

contactor is: - mechanical (side handle, or push buttons directly on contactor)?
- should we add a contactor downstream or replace the contactor?
- coiled, mechanically held?
- 2 coils?
- Is there already a system (SPDT relay or other) to control both the ON and OFF based on a single signal?
- If yes, ratings of the coil of this relay?
- coiled, electrically held?
Normally Open, I assume...

if coiled contactor, control is: ON/OFF electrical switch?
(info not absolutely essential) ON/AUTO/OFF electrical switch?
ON/OFF electrical buttons?
automatic (remote) only?

For the above, shall ON mean: - ON only if demand control system allows it
or - ON= override of demand control
(then need to add AUTO position for no override)

contactor coil(s): **DC? AC? 50Hz? Voltage?** Sealed VA? Inrush VA?

how many poles on contactor?
contactor has auxiliary contact?
If yes, already used?, at what voltage? AC or DC?

Any CTs existing on motor circuit?

How far is contactor from proposed location of controller?
(Honeywell R7600 relays limit at 1000 ft)

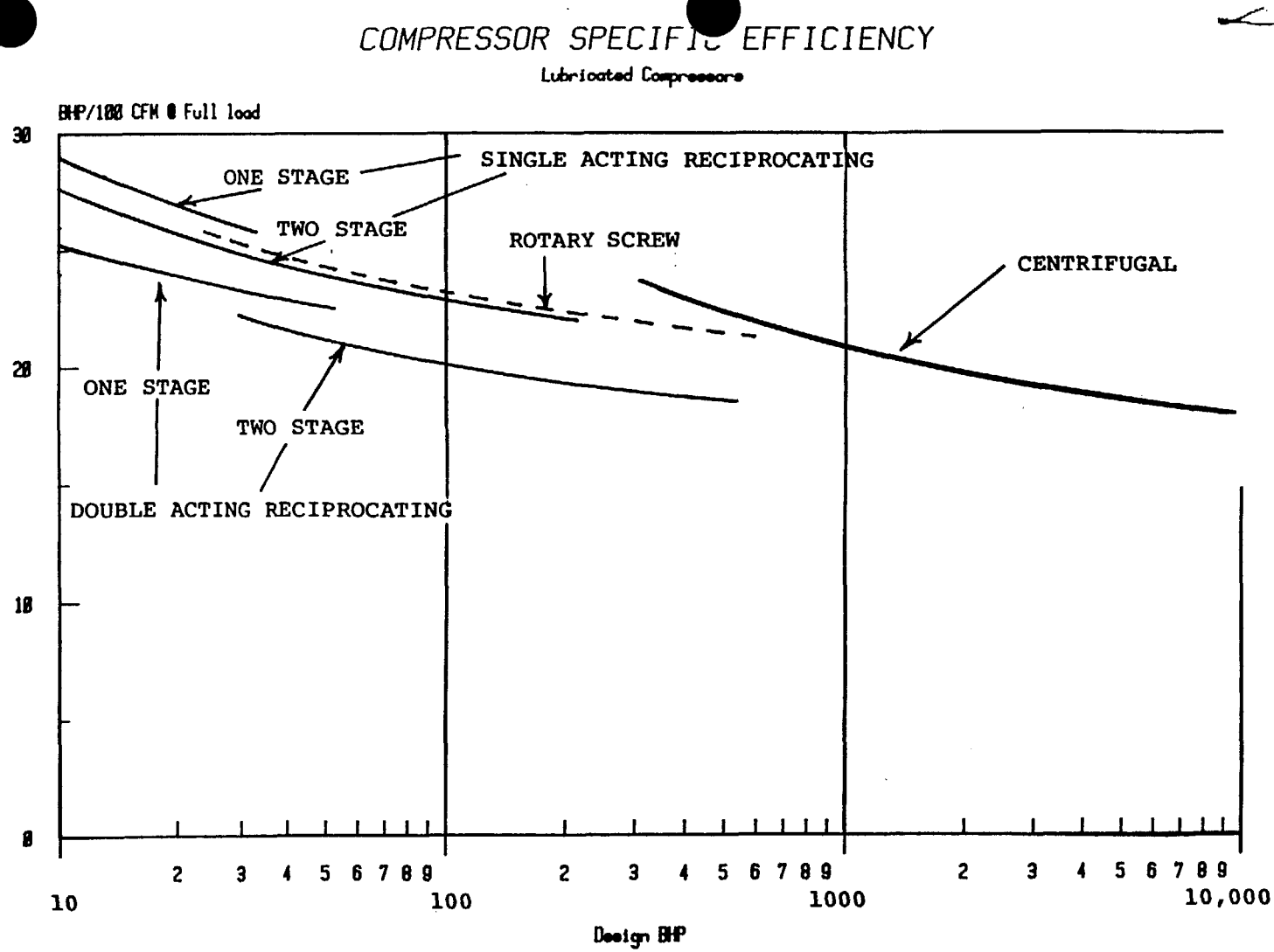

Figure 4-1 Relative Full Load Power Required of Typical Lubricated Compressors, 100 psig, at Sea Level

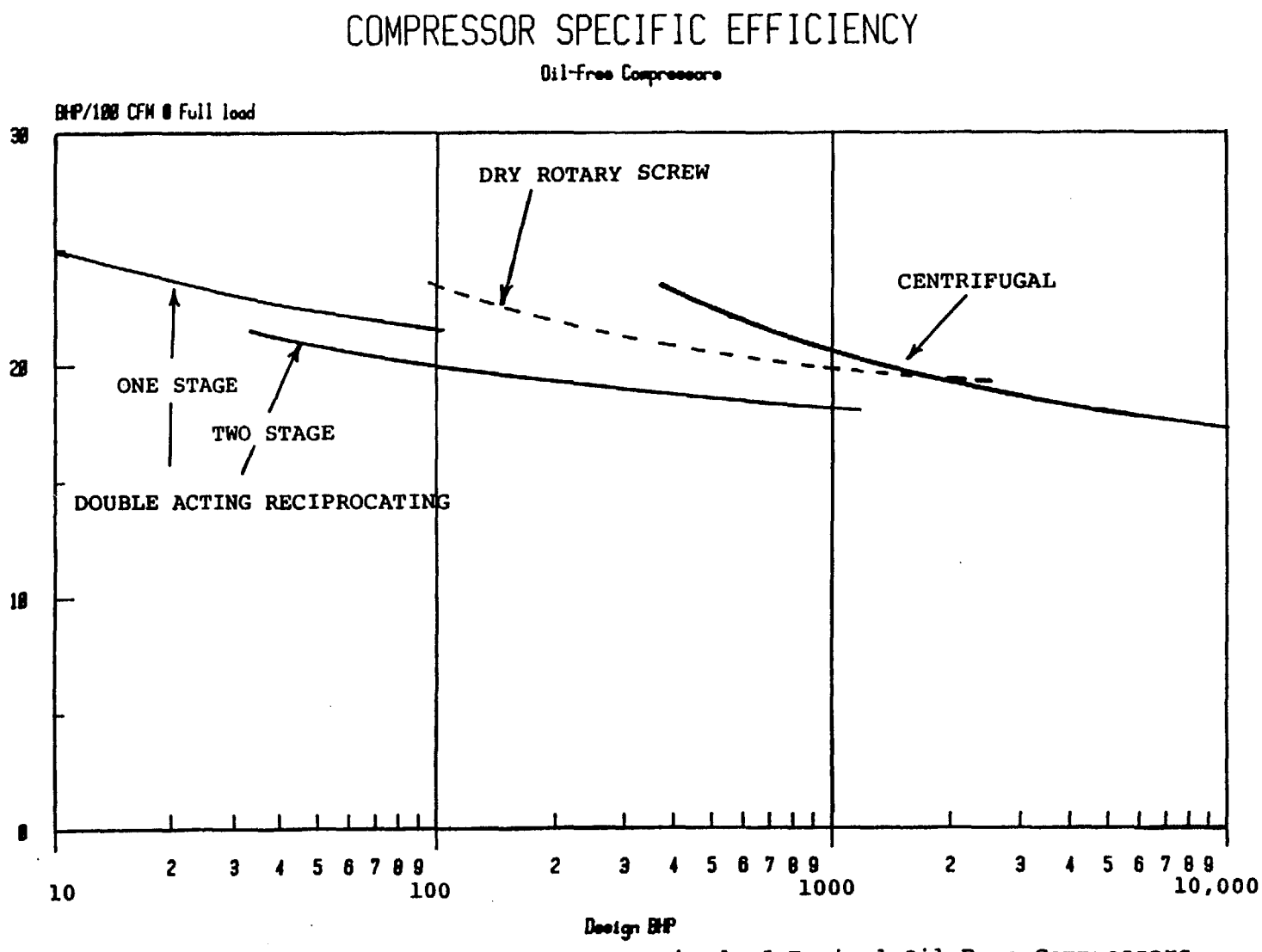

Figure 4-2 Relative Full Load Power Required of Typical Oil-Free Compressors, 100 psig, at Sea Level

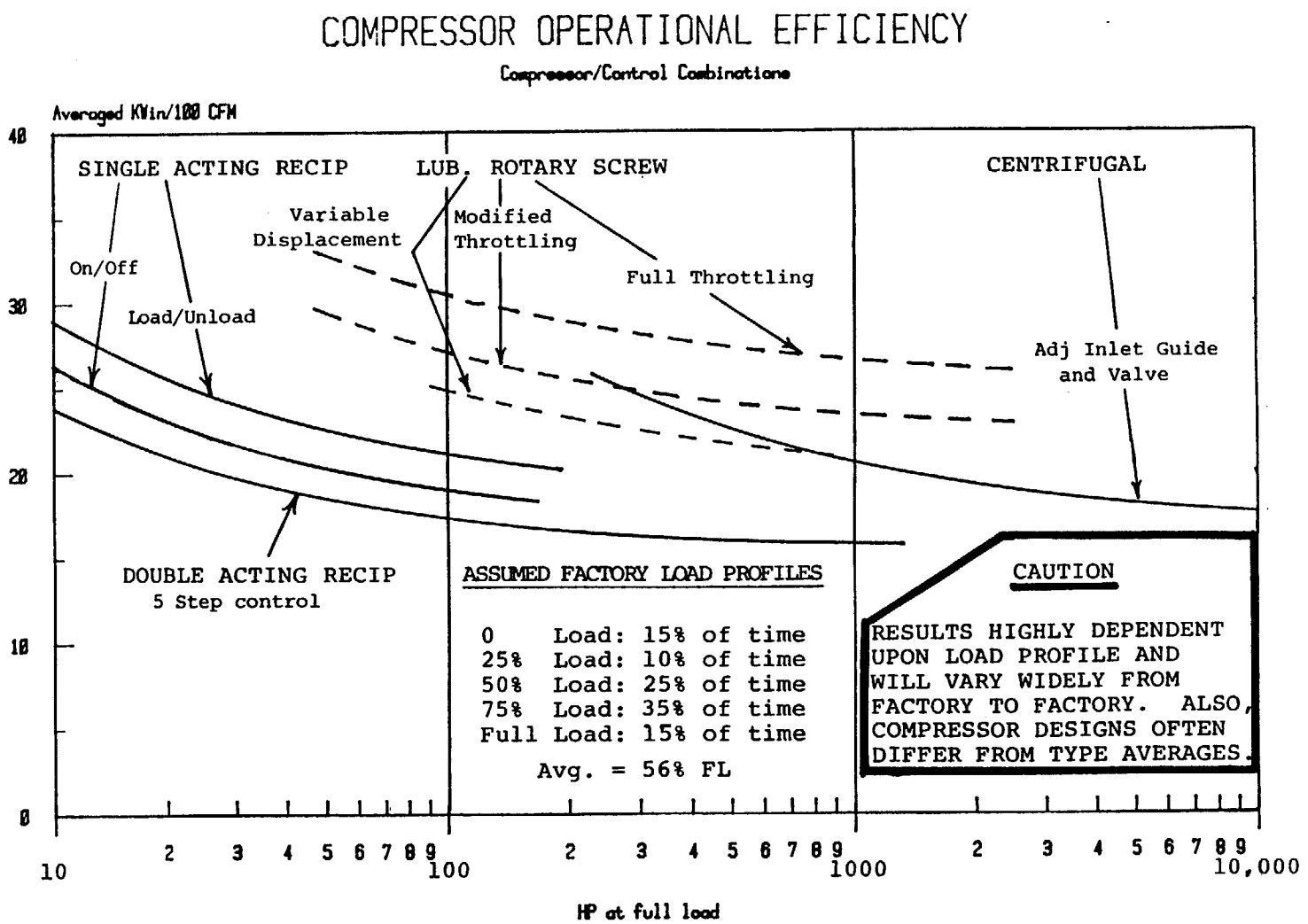

Figure 4-3 Relative Power Required by Single Compressor Supplying Variable Load, 100 psig , Sea Level

Part Load Efficiencies (%FL bhp at Indicated Reduced Loads)

CONTROL TYPE:	Type A - Two Step		Type B - Multi-Step		Type C - Throttling		Type D - Modified Throttling	
	Start/ Stop	Load/ Unloaded	Double Acting Unload	Unloaded/ Clearance Pockets	Discharge Bypass	Variable Speed	Inlet Valving (Same w/Un-loading)	Modified Throttling Inlet Guide Vane Adjustment
Modulating Range (%FL Capacity)	0,100	0,100	0,50,100	0,25,50, 75,100	0-100	20-100	0,40-100	0,70-100
Reciprocating Compressor								
Single Acting	0,100 (100%)	10,100 (0,100%) 2.				19-100 (105-100%)		
Double Acting	0,100 (100%)	10,100 (0,100%)	0,55,100 (0,91,100%)	10,32,55,78,100 (0,78,91,96,100%)		15-100 (130-100%)		
Rotary Compressor								
Helical Screw, Lobe, Rotary, Vane	0,100 (100%)	20,100 1. (0,100%)				For 50-100% load 60-100 (85-100%) For 30-100% load 50-100 (60-100%)	20,80-100 1. (0,50-100%)	
Centrifugal Compressor					100,100 (0,100%)		For 70-100% load 16,75-100 (0,93-100%) For 50-100% load 16,62-96 (0,81-96%)	11,71-100 (0,98-100%)

Notes: 1. Assumes sump bled down when unloaded. If sump not bled down, 70% FLbhp when unloaded.
2. ( ) denotes relative part load efficiency (%load/%FL capacity)

Table 4-1 Compressor Efficiencies at Part Load as a Function of Compressor Type and Control Mechanism

Table 4-1 Compressor Efficiencies at Part Load as a Function of Compressor Type and Control Mechanism

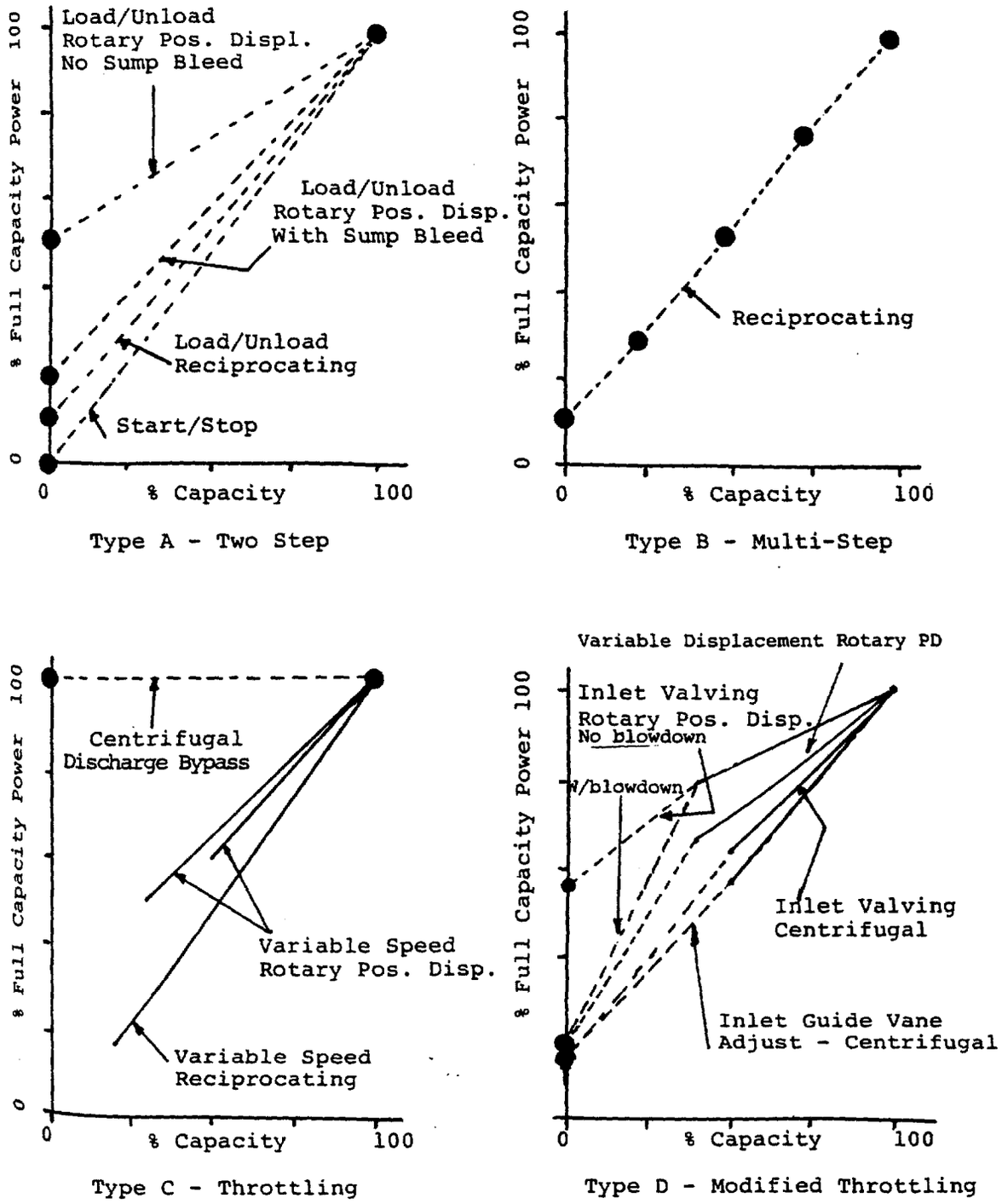

Figure 4-9 - Percent Full Load Power Required For Reduced Output

301

USAID EMERGENCY ENERGY PROGRAM FOR CENTRAL AND EASTERN EUROPE

CONTACT INFORMATION FOR U.S. EQUIPMENT SUPPLIED

ALLEN-BRADLEY

USA Headquarters:
Allen-Bradley
1201 South Second Street
Milwaukee, WI 53204, USA
Phone: (414) 382-2000
Fax: (414) 382-4444

Europe/Africa Headquarters:
Allen-Bradley GmbH
European Commercial Headquarters
Robert-Bosch-Strasse 5
6072 Dreieich-Sprendlingen
Germany
Phone: (49) 26103-379733
Fax: (49) 6103-379731

Hungary
Pyramid Automatics
H-1615 Budapest
P.O. Box 303
XV. Dembinsky u. 1
Hungary
Attn: Mr. Sander Bakos
Phone & Fax: (36-1) 169-4554

ALNOR INSTRUMENT COMPANY

USA Headquarters:
Alnor Instrument Company
7555 North Linder Avenue
Skokie, IL 60077
Attn: Mr. Alan Traylor, Director of Marketing
Phone: (708) 677-3500
Fax: (708) 677-3539

European Headquarters:
Alnor AB
Edvard Berlingsgatan 1
S-75450
Uppsala, Sweden
Attn: Mr. Per Lind,
European Marketing Manager
Phone: 46 181 00016
Fax: 46 181 00026

HONEYWELL

USA Headquarters:
Honeywell, Inc.
Honeywell Plaza
2701 Fourth Avenue, South
Minneapolis, MN 55408
Phone: (612) 666-8288
Fax: (612) 666-8401
Attn: Mr. Joe Villardo, Eastern European Rep.
Phone: (215) 666-8288, Valley Forge, PA
Fax: (215) 666-8401

Romania
Honeywell Bucharest Office
Aurel Vlaicu str. 147, sc 2, ap 62
Bucharest R-72921 Romania
Attn: Dipl.-Ing. Marius Epure,
Branch Manager
Phone: (40) 1-211-0076
Fax: (40) 1-210-3375

Bulgaria
Honeywell EOOD
14 Iskarasko Shosse
BG-1592 Sofia - Bulgaria
Phone: 359-2 794027
Fax: 359-2 794090

Poland
Honewell Sp. z.o.o.
Augustowka 3
PL-02981 Warsaw-Poland
Phone: 48-2 6422570
Fax: 48-2 6422648

Austria
Honeywell Austria GmbH
Gesellschaft M. b.H.
Handelskai 388
A-1023 Vienna, Austria
Phone: 43-1 213 30-0
Fax: 43-1 213 30-0

Hungary
Honeywell Szabalyozastechnikai
Volgy u. 30
H-1021 Budapest
Hungary
Attn: Mr. Illes Elemer
Phone: 36-1-275-1511
Fax: 36-1-275-1484

Czech Republic
Honewell
Service & Engineering spol. s.r.o.
Budejovicka 1
140 00 Praha 4
Prague, Czech Republic
Phone: 42-2 6112-2777
Fax: 42-2 6112-2691

Slovak Republic
Honeywell Austria GESMBH Organizacna
Zlozka
Trvavska 3
831 04 Bratislava
Slovakia
Phone: 42-7 60123
Fax: 42-7 64073

303

JOHNSON CONTROLS, INC.

USA Headquarters:
Johnson Controls
507 East Michigan Street
P.O. BOX 755
Milwaukee, WI 53201
Attn: Patrick Cronin, Manager Marketing Services
Phone: (414) 274-4000
1-800-333-2222
Fax: (414) 274-4388
Attn: Mr. John Halverson, Manager, Export Sales Department
Phone: (414)274-4786

European Headquarters:
Johnson Controls International/
European Coordination Center
Lombardstraat 24, 5th Etage
1000 Brussels, Belgium
Attn.: Tom Gannon, VP
Phone: (32-2) 514-0535

Eastern European Headquarters
JCIR/International Division
Max Planck Strasse 16
D-6382 Friedrichsdorf, Germany
Attn.: Antonin Vavrecka, General Manager
Phone: (49-61) 72735-114
Fax: (49) 6172-735-149
Fax: (49) 6172-735-159

Other locations:

Czech Republic
Johnson Controls International spol. S.R.O.
Bartakova 1121/3
14000 Praha
Attn: Daniel Mach

Slovak Republic
Johnson Controls International spol. S.R.O.
Mliekarenska ul. c.10
824 92 Bratislava
Attn.: Peter Strycek
Phone & Fax: (42-7) 212-567

Poland
Johnson Controls International Limited
ul. Nocznickiego 31
01-918 Warszawa
Attn.: Z. (Richi) Pasiorowski
Phone: (48-22) 349-062
Fax: (48-22) 349-410

Hungary
JCIR International/Budapest
Ferto ut 26 1/D
H-1107 Budapest
Attn.: Istvan Dombovari
Phone: (36-1) 262-9740
Fax: (36-1) 263-1317

Honeywell

Dipl.-Ing. Marius Epure

Branch Manager

Honeywell Bucharest Office
Aurel Vlaicu str. 147, sc 2, ap 62
Bucharest R-72921 Romania

phone: 0040-1-2110076
Fax/phone: 0040-1-2103375

Honeywell

Ing. Stefan Cristescu

Sales Representative

Honeywell Bucharest Office
Aurel Vlaicu str. 147, sc 2, ap 61
Bucharest R-72921 Romania

phone: 0040-1-2110076
Fax/phone: 0040-1-2103375

USAID - ROMANIA
ENERGY EFFICIENCY MARKET DEVELOPMENT

ENERGY AUDIT ADVISORY REPORT
VEGA S.A.

prepared for:
Automatizari Orion S.R.L.

prepared by:
Laurent Pommier
RCG/Hagler Bailly, Inc.

April 1, 1994

---

1. Activities

During our work together at Vega on 12/9/93, 2/3-4/94 and 3/25/94, we held interviews with the General Manager, Mechanical & Energetical Manager, and technical staff, to review the plant's energy consumption and the boilers operation. We inspected the boiler house and water treatment plant, and made measurements on the boilers. We reviewed the on-going work and discussed possibilities for equipment procurement.

This report complements the advisory memo that I gave you at the end of my February trip (attached).

2. Recommendations

2.1 Methodology to Establish Baseline Consumption

Congratulations for having obtained the month by month breakdown of energy consumption from the plant. This can be a valuable tool in your audit if you stay aware of the fact that some consumption figures may be only nominal values.

When/if in doubt, you can always try to go back to the person who filled out the consumption logs, to understand exactly how he or she arrived at a number when no individual flow totalizer exist. For example, this could explain how you arrive at nominal efficiencies for the boiler from some of the production log values. Also, make sure that the total fuel costs include not just gas but also a fair value for fuel oil (the 107,000,000 lei for December '93 seemed to be too small to have both gas and fuel oil...).

Keep in mind the main purpose of the historical energy consumption tables and energy balance tables: these tables are meant to give approximate indications of how the energy is used, and how this varies according to production or to the seasons. It is more important to have approximate but meaningful data, than very detailed but 'nominal' data.

I suggest you establish the following baselines (if you haven't already done them):

- Electricity, gas, and fuel for 12 months for the whole plant

- Annual treated water, and electricity for the whole boiler house.

  I recommend that you do a quick inventory of the boiler house electrical equipment, note kW ratings, estimate % load and operating hours, to give VEGA an estimate of how much electricity their boiler house uses. Alternatively, you can try to leave an electric power meter on the incoming power line, if there is a single, dedicated point.

- For an 'average CR boiler', establish the annual baseline consumption of fuel and treated water, as well as costs. This is the baseline that you should use in all your boiler savings calculations, and on the English report.

  We discussed how some CR boilers are used more one year, less another year, and how an average of the three consumption is a better prediction of the coming years.

  Compare your new estimate of the 'average CR' fuel consumption (10,000 t) to the 9235 t used in the preliminary study.
  (9,235 t = 18,250,000 lei saved / 2.6% savings / 76,000 lei/ton)

  You will definitely need to assign a value to the plant's own fuel oil: use the sale price if they do sell some to the outside; if not, use the average market price if the fuel is of a quality that is sellable; if not use the full amount it costs Vega to produce this fuel. The value of 76,000 lei/ton ($85/ton) used in the preliminary study seems reasonable.

  Try to put some money value on the treated water: chemicals used per liter of treated water, and, if dependent on quantity, electricity used by the equipment. Is the value of 363 lei/ton ($0.40/ton) indicated in the preliminary study reliable?

  Once you have established these CR-baseline quantities and costs, make sure you display them prominently in your report.

2.2 Comments on Efficiency Calculations

The value of .7 Gcal/t (2.9 GJ/t) is correct given the real parameters of operation (11-12 bar and 250°C), if you assume that there is no input of energy from the feedwater. If you want to calculate the heat added to the pre-heated feedwater, then .6 Gcal/t (2.5 GJ/t) is a better value. It all depends whether the steam output value you use includes the steam used for de-aeration and feed-water preheat or not. If it does not include this steam, then .7 is ok. If it does include the steam used for preheating, then .6 should be used.

In any case, you should not spend too much time on these calculations unless you can fully trust the fuel oil and steam consumption values. I think it makes more sense to use the excess air, combustion efficiency, and stack temperature values from the Orsat and Bacharach measurements to obtain an indication of what the potential savings are.

2.3 Comments on Proposed Measures and Energy Savings Calculations

- Congratulations for the great boiler schematics you did. This drawing would be very helpful for the operators, if they do not already have one like that.

- In our last discussion, it seemed that you were maybe slightly misunderstanding the meaning of the chart of page 180 of the 'Efficient Boiler Operations Sourcebook'. This chart shows how much the potential savings achievable through proper excess air adjustment are reduced because of the lag-time that occurs between the instant of the change in fuel and air supply conditions and the instant when the modified O_2 indication is read by the O_2 probe. If this lag-time is significant, the usual instability of air and fuel supply results in the fact that the trim control system will spend a significant portion of the time trying to 'catch-up' with the perturbations.

  When we used the Bacharach 300 combustion analyzer, with the probe placed on the front face of the boiler, and before the air-to-air heat exchanger, the lag-time was about 30 seconds. This would suggest that you can probably claim only about 50% of the savings that would result from a perfect O_2 trim. The lag time would be longer if the O_2 probe was located after the air preheater.

- Regarding the problem of the air damper: if the damper actuator which initially worked is no longer powerful enough, it is more likely due to a problem with the damper than with the actuator itself. Instead of replacing the actuator on a damper which may get worse and worse, you should encourage the plant to spend a bit of time during the mechanical overhaul to check the functioning of the damper (bent pieces, rust, lack of lubrication?).

There is no point in trying to install an expensive trim control system if the damper does not work properly.

- I also want to remind you about some suggestions I had made in my previous memo, regarding items that are not expressly in the scope of your contract with Vega, but which could add a lot of value to your report to Vega:

  1) Check all valves and dampers associated with the boilers to see if putting any of the pumps or fans on adjustable speed drives would bring a good payback.

  2) Based on the steam production costs that you will have calculated, you can give an example to Vega of what is the energy cost of: an average steam leak, failed steam trap, uninsulated pipe, and lost condensate, as well as what type of payback fixing these would be bring.

  3) Take a quick look at boiler loading, part load efficiencies, and the optimum combination of boilers for different loads.

3. Next Steps

(See attached Equipment Procurement Procedure and Equipment Procurement Timetable.)

Finalize calculation of energy usage and potential savings.

Establish specifications for the $10,000 equipment list. (for the oxygen analyzer, we need stack or duct diameter, gas temperature, stack pressure, etc...; for the control: damper actuator ratings, available compressed air pressure...).

Please also send specifications to Hagler Bailly for the steam feed-water and fuel meters (for the future $50,000 list).

Finish the design of the control system; decide exactly where the analyzer probe would be located, how the damper problem would be solved, and price all the additional necessary pieces of equipment (steam pressure or temperature sensor, fuel flow, controllers...).

Finalize the equipment lists, obtain preliminary approval from Vega of both the USAID equipment lists and the additional equipment that Vega will need to buy directly.

Each item that is to be considered for USAID funding needs to be justified on a 'Recommended Action' form (part of 'English Energy Audit Report Prepared for USAID and RCG/Hagler Bailly').

Prepare English Energy Audit Report to USAID and RCG/Hagler Bailly (set of forms already provided). Complete energy report to Vega, according to terms of your contract.

SUPPLEMENT: PRODUCT INFORMATION

- The Ametek model shown on pages 80 and 81 of the 'Sourcebook' costs about $8,500 (copy of brochure attached: both oxygen and combustibles are analyzed). The same model (extractive type) with only oxygen costs about $6500. An in-situ type (probe in the stack), with only oxygen, costs about $3500 for a 300 mm probe.

- Also enclosed:
  - -- Rosemount VeriTrim TC200 (about $10-$12,000, with support for installation), which provides an oxygen trim system that is added to the existing jackshaft (when the boiler's jackshaft is put back in order).
  - -- Rosemount Hagan 100 (about $2,000)
  - -- Rosemount World in-situ Class Oxygen Analyzer ($4500 with 450 mm probe)

- We had discussed putting a Fyrite II hand-held combustion analyzer on the equipment list. However, the pump of the Fyrite II is fairly small (it is rated for only 20 mm H2O): please check if the stack pressure is negative or positive at the sample hole (blows out of, or into the stack, depending on whether or not there is an induced draft fan), and if it is negative, try to measure the pressure at the sampling hole. If the aspiration is more than 20 mm H2O (1.86 mbar), then the Fyrite II (approx $1000) will not work. We will need to go to the Bacharach 300 ($3000, 254 mm H2O), or the new CA-40H, if available, (approx. $2400, 254 mm H2O, brochure attached)