TRIP REPORT #1 PETROCHEMA

DUBOVA, SLOVAK REPUBLIC

WASTE MINIMIZATION PROJECT

MAY 9 - 15, 1993

WORLD ENVIRONMENT CENTER
419 PARK AVENUE SOUTH, SUITE 1800
NEW YORK, NEW YORK 10016

JUNE 1993

REPORT DISTRIBUTION LIST:

Ronald J. Greenberg, Chief, Bureau for Europe, Agency for International Development

James Taft, Project Officer, Bureau for Europe, Agency for International Development

Patricia Lerner, AID Representative, Slovak Republic

Patricia A. Swahn, Acquisitions Manager, Document Acquisitions, Agency for International Development

Samuel Hale, Jr., Senior Environmental Advisor to the Slovak Republic

Antony G. Marcil, WEC

Frank T. Wood, WEC

Rom Michalek, WEC

Thomas J. McGrath, WEC

Bohdan Aftanas, WEC

Dorothy E. Chuckro, WEC

File (1)

TABLE OF CONTENTS

		Page
I.	Itinerary	1
II.	Executive Summary	2-3
III.	Consultant's Report	4
IV.	Business Cards	5

I. ITINERARY

May 9, 1993 - Banska Bystrica

- Arrive in Banska Bystrica, Slovak Republic

May 10, 1993 - Dubova

- Met with Department Managers at Petrochema

May 11, 1993 - Dubova

- Tour of Goudron Deposit Sites, Waste Water Treatment Plant, Incinerator Plant, White Oil Plant

May 12, 1993 - Dubova

- Discussions held with Incinerator Plant Manager and Environmental Protection Manager
- Tour the Goudron Neutralization Facility

May 13, 1993 - Dubova

- Met with the General Manager and Department Managers

May 14, 1993 - Bratislava

- Meeting at the Ministry of Economy of the Slovak Republic

May 15, 1993 - Vienna, Austria

- Return trip to United States

II. EXECUTIVE SUMMARY

Pursuant to the Technical Assistance Program for Central and East European countries funded by U.S. Agency for International Development, the World Environment Center (WEC) organized a reconnaissance trip to Petrochema, a manufacturer of lubricating oils, in the town of Dubova, Slovak Republic. The objective of this reconnaissance visit was to identify the most appropriate manufacturing process for the waste minimization demonstration project (WMDP).

Petrochema is situated between the two largest national parks in the Lower Tatra mountain region of Slovak Republic. Both parks are frequented by tourists and vacationers year round. The Ministry of the Economy of the Slovak Republic has placed a high priority on Petrochema's environmental problems because of Petrochema's negative impact on the surrounding area.

The WEC team consisting of WEC staff, Mr. Thomas J.McGrath, Vice President, (one day) and Ms. Dorothy E. Chuckro, Deputy Project Manager, Mr. Edward M. Andrechak, Department Head, Radian Corporation, and Mr. Samuel Weiss, WEC Specialist, visited the Petrochema complex in Dubova from May 10 to 13, 1993.

Petrochema management asked the WEC team to focus its attention on the white oil production because it produces a high level of a waste material sludge, referred to as "Goudron". Goudron is a tar-like, oil-based substance of high acidic content. During the visit, the team held discussions with plant management; reviewed process flow diagrams and data; and toured the white oil manufacturing facility, deposit sites, waste water treatment plant, incinerator plant, Goudron neutralization facility and environmental laboratories. Discussions about the project were held with managers from the following departments: White Oil Production, Environmental Protection, Technical Development, Incinerator Facility, and Energy.

The WEC team and the plant management identified two possible waste minimization demonstration projects. The first WMDP will be the optimization of sulphur trioxide (SO_3) production at the white oil plant. The project is estimated to reduce sulfur dioxide (SO_2) emissions by about 75% which is equivalent to 70 metric tons per year of SO_2. The second WMDP will involve the neutralization of the Goudron sludge before incineration and is projected to reduce SO_2 emissions at the incinerator plant by about 70%, which is equivalent to 180 metric tons per year of SO_2. The SO_2 emission reductions from both WMDPs can bring Petrochema in compliance with the new proposed permit limit (2500mg/m3) of SO_2 emissions. Mr. Andrechak estimated that penalty cost savings of $35,000 can be derived from both WMDPs between the years 1993-1998.

WEC will send Petrochema a Memorandum of Understanding for the projects. Petrochema will in the Memorandum of Understanding agree to commit the enterprise to future waste minimization projects to be performed by Petrochema employees.

The start-up phase of the waste minimization demonstration projects is scheduled for September 1993. WEC will supply monitoring equipment for detecting SO_2 emissions and on-site training of plant personnel in performing field measurements and in the techniques of waste minimization.

Enclosed is Mr. Andrechak's report describing the details of the projects.

III. CONSULTANT'S REPORT

RADIAN
CORPORATION

TECHNICAL MEMORANDUM

300 N. Sepulveda Blvd., Suite 1000
El Segundo, CA 90245
(310) 640-0045

TO: Ms. Dorothy Chuckro, Deputy Project Manager, World Environment Center

FROM: Edward M. Andrechak, Radian Corporation

COPY: Ján Maťaš (Petrochema), Don Jackson (Radian), Project File 700-101

DATE: 8 June 1993

SUBJECT: **Petrochema Site Visit Report and Recommendations**

1.0 INTRODUCTION

This memorandum summarizes the findings of our recent visit to the Petrochema Oil Refinery in Dubova, Slovakia. The visit was conducted as part of the World Environment Center's (WEC) Waste Minimization Demonstration Program, which arranges for teams of U.S.-based consultants to identify and implement waste minimization projects at targeted plants within Central Europe. The purpose of this visit to Petrochema was to review key processes and identify potential processes for waste minimization applications. The team did not intend to perform a formal facility environmental assessment. Included in this memorandum are recommendations for the completion of two proposed waste minimization projects at the plant.

2.0 SUMMARY OF FINDINGS

Based on a four-day review of the main processes at the refinery, our team found that Petrochema is making steady progress towards solving their environmental problems. The technical staff have identified all of their key water, waste, air, and groundwater problems. In many cases, Petrochema has already begun work on solutions. However, the following important environmental issues still need to be addressed: decrease the generation of Goudron sludge, decrease the sulfur content of Goudron sludge, decrease sulfur dioxide (SO_2) emissions at both the caustic scrubber in the white oil plant and in the incinerator stacks, and develop an effective method to handle old Goudron sludge stored in several on-site and off-site landfills.

The above environmental issues can be addressed, in part, through implementation of the following proposed waste minimization projects:

- Optimization of sulphur trioxide (SO_3) production used in the manufacture of white oil; and

- Neutralization of Goudron sludge, a waste product generated during the manufacture of white oil.

The major benefits of optimizing SO_3 production are reduced caustic scrubber SO_2 emissions to the atmosphere, reduced SO_2 emissions penalties, reduced sulfur content of the resultant Goudron sludge, reduced liquid sulfur feed volume, and reduced caustic consumption in the scrubber operation.

The major benefits of neutralizing Goudron sludge are a significant reduction in SO_2 emissions from the plant's incinerators and a resultant decrease in SO_2 emissions penalties. Neutralization of old Goudron sludge has already undergone successful bench-scale and pilot testing at the refinery. Fresh Goudron sludge has yet to be tested.

More detailed process descriptions and economic and emissions benefits for both waste minimization proposals are presented in Sections 5.0 and 6.0, respectively.

3.0 VISIT LOGISTICS

The WEC team consisted of five members: Mr. Tom McGrath, WEC Vice-President; Ms. Dorothy Chuckro, Deputy Project Manager; Mr. Samuel Weiss, Consultant; Mr. Edward Andrechak, Radian Department Head; and Mrs. Olga Hauskrechtova, Consultant.

The facility visit took place from Monday, 10 May through Thursday, 13 May 1993. During the facility visit, we met with various members of Petrochema staff, including Mr. Josef Šuráb, Technical and Production Director; Ms. Maria Babiaková, Head of the Department of the Environmental Protection; Ms. Alena Volentierová, Technical Development Department; Mr. Andrej Kusnierik, Technical Development Department; Mr. Michal Majercik, Head of the White Oil Production Department; and Mr. Tibor Duriš, Head of Energy Department. The visit was very informative and the WEC team found the staff at Petrochema to be cooperative and very knowledgeable.

On Thursday, we met with Mr. Ján Maťaš, Plant Director, to present our visit findings and preliminary recommendations. Returning to Bratislava on Friday, 14 May, we met with Mr. František Holler, Director of the Technical and Economical Department, Division of Chemical and Consumer Goods Industries, to reiterate our findings and recommendations.

4.0 PLANT REVIEW METHODOLOGY

At the start of our facility visit on Monday, the WEC team met with Mr. Šuráb and several other members of Petrochema's technical staff. At that initial meeting, Mr. McGrath outlined the objectives of WEC's Waste Minimization Demonstration Program. Afterwards, we began a technical discussion of some of

Petrochema's environmental waste issues. Mr. Šuráb requested that we focus our investigation on the production of Goudron sludge, wastewater treatment sludge, and spent clay used in the production of white oil.

During the next three days, we reviewed the white oil process in the greatest detail, including a review of process flow diagrams and some process performance data. We also toured the white oil plant, the Goudron neutralization facilities, the incinerators, the various on-site and off-site landfills for storing both Goudron sludge and wastewater treatment sludge, and the wastewater treatment plant including the newly installed biological treatment portion of the plant. We reviewed various existing effluent permit limits for wastewater treatment and the proposed air emission permit limits for the incinerator stacks and the white oil plant caustic scrubber. Finally, we collected data necessary to calculate reductions in plant emissions and any associated economic savings.

Near the end of the day on Wednesday, we were able to identify two processes for further consideration as Waste Minimization Demonstration Projects. Specifically, these two processes are the optimization of SO_3 production used in the manufacture of white oil; and the neutralization of Goudron sludge, a waste product generated during the manufacture of white oil.

During our visit, we also performed an *informal* environmental assessment when the opportunity presented itself. For example, we were pleased to learn that the biological treatment portion of the wastewater treatment plant has recently been added to comply with newly-issued wastewater effluent limits. We also learned that Petrochema had installed a subsurface bentonite wall to prevent separate phase hydrocarbon and contaminated groundwater from reaching the nearby river. These examples demonstrate that the management and technical staff at Petrochema understand what their environmental problems are and are willing to take positive action to solve these problems.

5.0 PROPOSED WASTE MINIMIZATION PROJECTS

A description of the two proposed waste minimization projects, optimizing SO_3 production in the white oil plant and neutralizing Goudron sludge, is presented in the following sections. Figure 1 shows a simplified process flow of the overall white oil production process, including the generation of Goudron sludge. Figure 2 shows the process flow for the production of SO_3 in the white oil plant. Preliminary optimization test measurement types and locations are also shown on Figure 2.

5.1 Optimization of SO_3 Production in the White Oil Plant

The optimization of SO_3 production and its resulting usage during white oil production involves two steps. Step one is a performance test conducted on the vanadium pentoxide (V_2O_5) conversion catalyst. This catalyst converts SO_2 into SO_3 for

use in sulphonating white oil feedstock. Unconverted SO_2 passes through the white oil production system and is treated in a caustic scrubber at the tail end of the plant. The objective of this first step is to increase the conversion of SO_3, thereby decreasing the amount of unreacted SO_2 left to pass through the system. Excess unreacted SO_2 can overwhelm the scrubber's design capability resulting in high SO_2 emissions to the atmosphere.

Step two of this optimization project is a performance test conducted on the caustic scrubber ensuring that unreacted SO_2 emissions do not pass through the scrubber to the atmosphere. Ideally, in conducting these two performance tests, we would like to complete a total sulfur balance on the white oil plant. At a minimum, the ability to measure SO_2 emissions at several selected white oil plant locations is necessary to successfully complete the optimization program. The measurement of SO_3 would also be desirable but not absolutely necessary.

Based on the results of the two performance tests, specific V_2O_5 catalyst operating temperatures will be determined which will maximize the production of SO_3 and minimize the amount of unreacted SO_2. In addition, specific spent caustic blowdown and fresh caustic makeup flow rates will be determined to significantly reduce SO_2 emissions from the scrubber to the atmosphere.

5.2 Goudron Sludge Neutralization

Goudron sludge is a tarry, viscous hydrocarbon pitch which is generated as a waste product from the sulphonation of white oil feedstock. It derives its name from the French word, "goudron," which means "blacktop." Goudron sludge quality varies but contains components with the following compositions, ranging by weight percent:

- Oil - 10 to 60%;
- Water - 5 to 25%;
- Sulphonic acid - 10 to 45%; and
- Sulfuric acid - 10 to 90 percent.

Neutralization of Goudron sludge prior to incineration involves mixing lime [$Ca(OH)_2$] with the acidic Goudron sludge. Additionally, sludge from the wastewater treatment plant (slightly alkaline) and spent clay from the white oil plant have been added to the neutralization mixture during previous pilot tests. The neutralization reaction removes sulphur as a precipitate, calcium sulfate ($CaSO_4$). As a result, the SO_2 emissions generated during incineration of Goudron sludge are reduced by a corresponding amount. Both bench and pilot testing of this neutralization process are currently in progress at the refinery with encouraging results. Old Goudron sludge has been neutralized successfully.

Fresh Goudron sludge remains to be tested on a commercial scale and presents special technical concerns. Specifically, neutralization of fresh Goudron sludge may result in SO_3 evolution as well as increased mixer temperatures due to heat generated from neutralization and mixing. Equipment modifications and contingency plans may need to be developed by the Petrochema technical staff and their neutralization contractor before fresh Goudron sludge can be neutralized successfully.

We propose to aid the technical staff at Petrochema in achieving successful neutralization of fresh Goudron sludge. Additionally, we will measure the SO_2 emissions [and sulfurous acid (H_2SO_3) emissions, if possible] generated in the incinerator stack during the burning of neutralized Goudron sludge. The ability to measure SO_2 concentrations in the incinerator stack will enable calculation of the actual reduction in SO_2 emissions achieved by the neutralization process. A continuous SO_2 analyzer would provide the most useful means of measuring these emissions. It would also provide plant personnel with a continuous measurement tool for future compliance with the new air emissions permit limits proposed for their incinerator operation (due in June 1993).

6.0 POLLUTION REDUCTIONS AND ECONOMIC SAVINGS

If the SO_3 optimization project, including the optimization of the caustic scrubber, is successful, the following waste reduction and economic benefits should be realized:

- SO_2 emissions from the white oil plant's caustic scrubber may be reduced from 10,000 mg/m^3 (3836 ppmv) to at least the new proposed permit limit of 2500 mg/m^3 (959 ppmv). Actual reductions may be greater. Assuming a 2070 m^3/hr scrubber exhaust rate, 24 hour/day operation, and a 50% plant operating factor, a reduction of approximately 70 metric tons/year of SO_2 could be achieved.

- The sulphur content of the resultant Goudron sludge could be reduced by about 5 to 10 percent. This reduction will result in further reductions of SO_2 emissions from the incinerator when the Goudron sludge is burned. Estimating these emissions will require collecting additional information.

- Reduced liquid sulfur feed volume may be achieved through more efficient use of feed sulfur via its conversion to SO_3. Estimating the net reduction in feed sulphur can only be accurately measured by the proposed plant performance test.

- Reduced caustic consumption in the scrubber operation may be achieved by the reduction in unreacted SO_2 passing through the white oil plant and being treated by the scrubber. Estimating the

9'

net reduction in caustic usage can only be accurately measured by the proposed plant performance test.

- For the period 1993-1998, the cost savings in reduced SO_2 emissions penalties is approximately 300,000 Slovak Korunas, or about $10,000 U.S.

If the neutralization of Goudron sludge is successful, the following waste reduction and economic benefits should be realized:

- SO_2 emissions from the facility's incinerator may be reduced from 10,000 mg/m^3 (3836 ppmv) to at least the new proposed permit limit of 3000 mg/m^3 (1150 ppmv). Assuming one metric ton of Goudron sludge per hour is burned in the incinerator on average and 24 hour/day operation, 365 days per year, a reduction of approximately 180 metric tons/year of SO_2 could be achieved. Actual reductions may be significantly greater and will be verified during the test program.

- Both sludge from the wastewater treatment plant and spent clay from the white oil plant can be mixed with Goudron sludge and incinerated, reducing the volume of these two waste materials requiring land disposal.

- For the period 1993-1998, the cost savings in reduced SO_2 emissions penalties is approximately 775,000 Slovak Korunas, or about $25,000 U.S.

In general, the reduction of SO_2 emissions from both projects will also result in health benefits for residents in the surrounding areas. At the same time, the reduction of SO_2 emissions should have a positive impact on the two national forests adjacent to Petrochema.

In summary, the two waste minimization projects presented here have the potential to significantly reduce the SO_2 emissions from the Petrochema facility. At the same time, other pollution prevention, health, and economic benefits should be realized. With Petrochema's approval, we can initiate the engineering tasks to complete these two projects. Failure to comply with the new air emissions permit limits due in June for both the caustic scrubber or the incinerator could possibly result in the shutdown of the white oil plant or the entire Petrochema facility.

7.0 SCHEDULE OF PROPOSED STEPS

The delivery time for a continuous SO_2 emission analyzer, which is required to complete both of the proposed waste minimization projects, is approximately

-10

six to eight weeks. Before ordering the SO_2 analyzer, approximately four weeks (during June) will be required to specify the analyzer's requirements. Therefore, we expect to return to Petrochema for analyzer installation in the beginning of September.

During our visit in September, we will first test and calibrate the new SO_2 analyzer. The new analyzer will then be temporarily located near the white oil plant and used to complete the optimization of SO_3 production in the white oil plant. Petrochema staff would be trained to operate and maintain the analyzer during this visit. The successful completion of the SO_3 optimization test program will conclude the second visit.

At the conclusion of the second visit, the SO_2 analyzer will be permanently installed at the incinerator stack by Petrochema. After the installation is complete, the WEC team will return for a third visit (tentatively in November 1993) to recalibrate the analyzer and perform the test evaluation of SO_2 emissions from the burning of neutralized Goudron sludge in the incinerator. The permanently-installed analyzer may then be used for future compliance monitoring of the incinerator(s) emissions.

A fourth visit will be conducted only if required by Petrochema for followup technical support or additional training. If necessary, we would complete this visit prior to May 1994.

8.0 OTHER ISSUES

Petrochema inquired about the possibility of installing a continuous emission monitoring (CEM) system at the incinerators which also measured carbon monoxide (CO) and nitrogen oxides (NO_x) in addition to SO_2. Our preliminary investigation indicates that such "package" analyzers are available but their purchase cost would exceed WEC's capital budget of $25,000 U.S. per facility. Therefore, a purchase of such an analyzer would require partial funding by Petrochema. The actual cost of such a package analyzer might approach $100,000 U.S. Additional investigation will be required to better understand equipment specifications, purchase costs and delivery time for this type of analyzer.

We have investigated the possibility of purchasing a continuous SO_3 analyzer. We have identified a British company that makes such an analyzer. However, the purchase of both an SO_2 analyzer and an SO_3 analyzer would exceed the $25,000 U.S. capital budget. Furthermore, we should be able to optimize the SO_3 production in the white oil plant without a continuous SO_3/sulfuric acid (H_2SO_4) analyzer. If necessary, a manual sampling train (i.e., U.S. EPA Method 8) to measure SO_3 can be set up during the optimization performance test period.

A third issue that will need to be investigated between now and our return to Petrochema in September is the possibility of tying sample lines from both the caustic scrubber exhaust and the incinerator flue gas into the same SO_2 analyzer. This approach

would provide continuous SO_2 measurements for both of these emission sources, ensuring better compliance with the June 1993 permit limits. The distance between these two emissions sources is the biggest factor in determining the feasibility of such an analyzer time-sharing arrangement.

9.0 REQUIRED OUTSIDE RESOURCES

A successful set of performance tests in September and November by the WEC team will require the assistance of Petrochema personnel and possibly some additional or "outside" resources. Petrochema personnel will assist in the following:

- Specifying the analyzer(s) requirements;
- Installing the new analyzer (s) with vendor and WEC team guidance;
- Developing all performance test plans; and
- Conducting the actual performance tests including analysis and reporting of the results.

An outside source testing contractor may be necessary to measure SO_3 during the white oil plant performance test. Other outside assistance will be determined as the two projects become better defined.

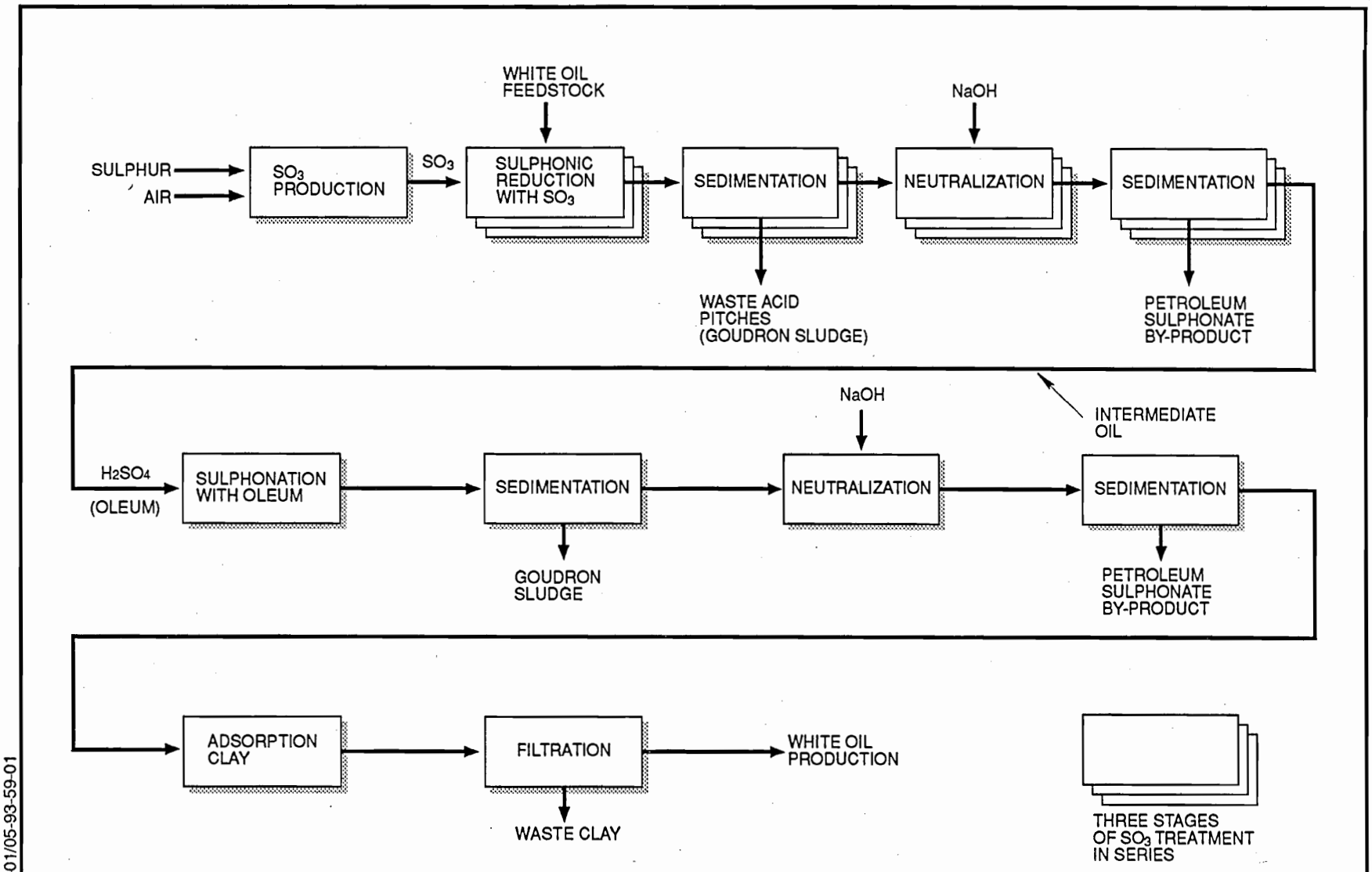

Figure 1. Process Flow Digram - White Oil Production

ELS700-101-01-01/05-93-59-01

RADIAN CORPORATION

3

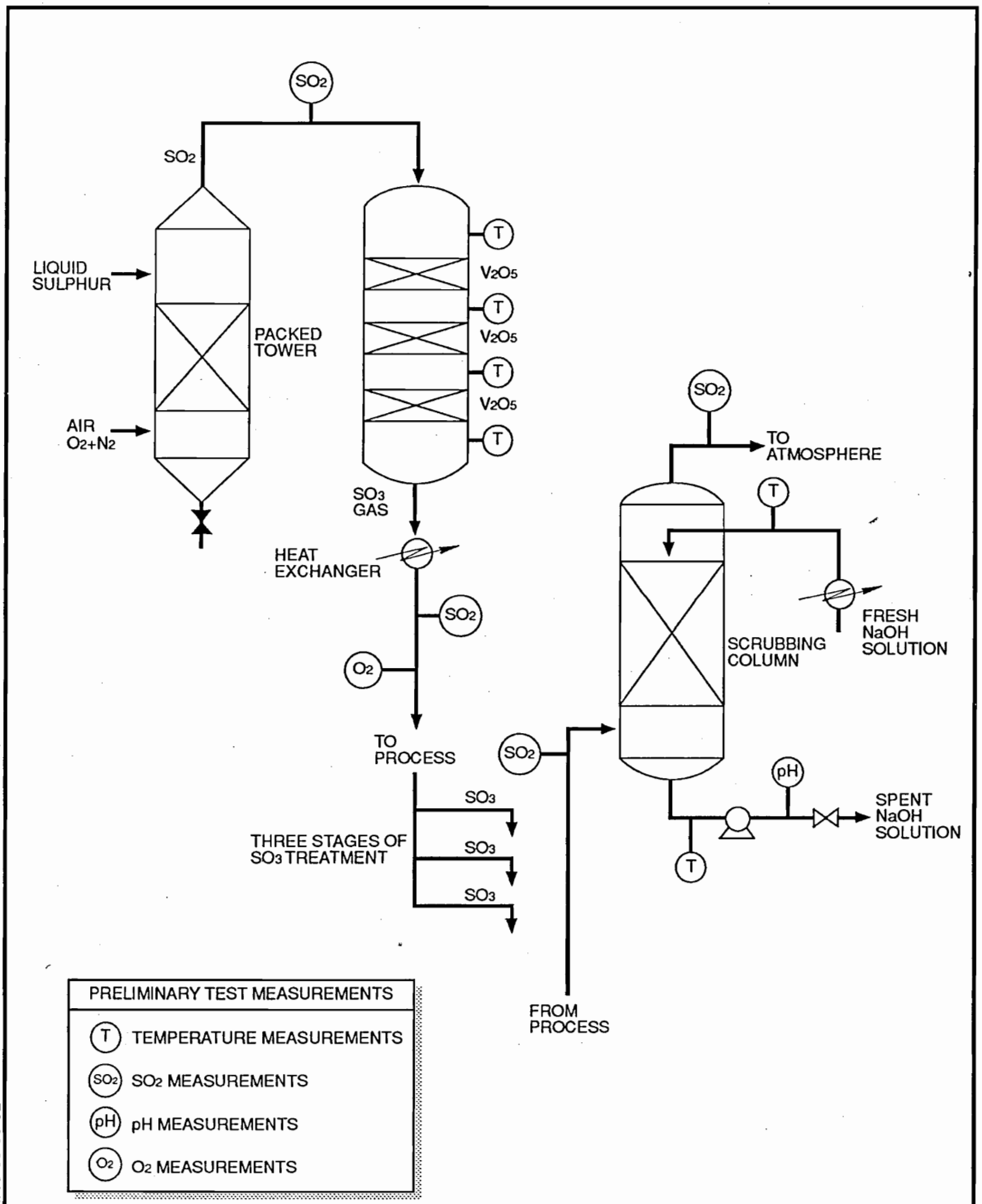

ELS700-101-01-01/05-93-59-02

Figure 2. Process Flow Diagram - SO_3 Production in the White Oil Plant

IV. BUSINESS CARDS

15

PETROCHEMA

Ing. JÁN MAŤAŠ
riaditeľ podniku

DUBOVÁ 976 97 NEMECKÁ
Telefón: 0867/92208
Telex: 070273
Fax: 0867/92286

PRIVAT:
Malinovského 30
977 01 BREZNO
Tel.: 0867/4359

PETROCHEMA

Ing. Jozef ŠURÁB
výrobno - technický námestník

PETROCHEMA š.p. DUBOVÁ
pošta 976 97 NEMECKÁ n. HR.
tel.: 0867/ 926 142
926 182
fax: 0867/ 922 86
telex: 070273

Privat:
ŠLN 24
977 01 BREZNO
tel.:0867/ 4009

RADIAN CORPORATION

300 N. Sepulveda Blvd., Suite 1000
El Segundo, CA 90245
(310) 640-0045
FAX # (310) 640-8940

Edward M. Andrechak
Department Head
Environmental Services Department

INTERNATIONAL RESOURCES GROUP LTD.

Oľga Hauskrechtová
Consultant

Jahodová 17
831 01 Bratislava
Slovak Republic

tel. :
07 / 37 58 71