COLOMBIA

SMALL FARMER MARKET ACCESS LOAN

August 30, 1975

COLOMBIA: SMALL FARMER MARKET ACCESS

TABLE OF CONTENTS

	PAGE
PART I - SUMMARY AND RECOMMENDATION	1
A. FACE SHEET DATA	1
B. RECOMMENDATIONS	2
C. DESCRIPTION OF THE PROJECT	2
D. SUMMARY FINDING	3
E. PROJECT ISSUES	4
PART II - PROJECT BACKGROUND AND DETAILED DESCRIPTION	7
A. BACKGROUND	7
1. AGRICULTURE SECTOR SUMMARY	7
2. CHARACTERISTICS OF THE RURAL POPULACE	8
3. GOC DEVELOPMENT STRATEGY	9
4. USAID ROLE IN STRATEGY	10
5. THE PROBLEM	12
6. PICO Y PALA PROGRAM	13
7. AGRICULTURAL IMPACT	15
8. OTHER CAMINOS VECINALES PROGRAMS	20
B. DETAILED DESCRIPTION OF THE PROJECT	22
1. GOAL	22
2. PURPOSES	22
3. END OF PROJECT STATUS	23
4. IMPORTANT ASSUMPTIONS	24
5. PLANNED OUTPUTS	28
6. PLANNED INPUTS	37
PART III - PROJECT ANALYSES	44
A. TECHNICAL ANALYSIS INCLUDING ENVIRONMENTAL ASSESSMENT	44
1. TECHNICAL DESCRIPTION OF THE PROJECT	44
2. PRELIMINARY TECHNICAL CONSIDERATION	44

PAGE

3. IMPLEMENTATION PLAN 45
4. DESIGN STANDARDS 46
5. EQUIPMENT 47
6. TECHNICAL SOUNDNESS 48
7. LAND EXPROPRIATION 50
8. OVERALL COST ESTIMATES 52
9. LABOR MATERIAL COSTS 53
10. ENVIRONMENTAL ASPECTS 53

B. FINANCIAL ANALYSIS AND PLAN 56
1. BUDGET ANALYSIS OF CAMINOS VECINALES 56
2. FINANCIAL PLAN/BUDGET TABLES 60
3. SUMMARY OPINIONS 63

C. SOCIAL ANALYSIS 64
1. TARGET GROUP 64
2. CHARACTERISTICS OF THE RURAL POPULACE 64
3. SMALL FARMER ORGANIZATION 65
4. SPREAD EFFECT 65
5. SOCIAL CONSEQUENCES AND BENEFIT INCIDENCE 66

D. ECONOMIC ANALYSIS 69
1. PROJECT SELECTION 69
2. THE WEIGHTING SCHEME 70
3. ECONOMIC ANALYSIS TEAMS 74
4. ECONOMIC RETURNS 75

PART IV - IMPLEMENTATION ARRANGEMENTS 79

A. ANALYSIS OF ADMINISTRATIVE ARRANGEMENTS 79
1. RECIPIENT 79
2. AID LOAN MONITORING AND EVALUATION 82

B. IMPLEMENTATION PLAN 83
1. BORROWER AND IMPLEMENTING AGENCY 83
2. DISBURSEMENTS FOR ROAD CONSTRUCTION 83
3. DISBURSEMENTS FOR INSTITUTIONAL IMPROVEMENT 88
4. PLANNED PERFORMANCE TRACKING SYSTEM 88

C. EVALUATION ARRANGEMENTS FOR THE PROJECT 88

D. CONDITIONS, COVENANTS 89

ANNEXES

I. LEGAL EXHIBITS

1. CHECKLIST OF STATUTORY CRITERIA
2. MISSION DIRECTORS CERTIFICATION
3. DRAFT LOAN AUTHORIZATION
4. GOC LOAN APPLICATION
5. PROJECT DESCRIPTION FOR LOAN ANNEX

II. PROJECT ANALYSIS

1. ORIGINAL REQUEST
2. SMALL FARMER ANALYSIS
3. PICO Y PALA PROCEDURES
4. PERSONNEL - CAMINOS VECINALES
5. DRI AREAS
6. COST AND LENGTH OF ROADS COMPLETED

III. LOGICAL FRAMEWORK

IV. LAND DAMAGE CAUSED BY ROAD CONSTRUCTION

V. CASH FLOW ASSIGNMENT

VI. PLANNED PERFORMANCE TRACKING NETWORK

PROJECT COMMITTEE:

JAMES KEARNEY - CHAIRMAN - LOAN OFFICER
ALFONSO CORREDOR - TRANSPORTATION PLANNER
DWIGHT STEEN - AGRICULTURAL ECONOMIST
RAY RIFENBURG - PROGRAM OFFICER
BRUCE ODELL - AID/W LOAN OFFICER
WILBUR CAMP - AID/W ENGINEER
VALIENTE DEL VALLE - PROJECT ADVISOR

CREDIT MUST BE GIVEN TO THE CAPITAL ASSISTANCE COMMITTEE WHICH PREPARED A CAP FOR THIS PROJECT PRESENTED JUNE 12, 1975:

RICHARD FREDERICK - CHAIRMAN
JAMES KEARNEY - LOAN OFFICER
RAYMOND RIFENBURG - NUTRITION ADVISOR
CHRISTIAN GOMEZ - MARKETING ADVISOR
ROBERT CATE - AGRICULTURAL ADVISOR
DAVID PEACOCK - AGRICULTURAL ECONOMIST
DWIGHT STEEN - AGRICULTURAL ECONOMIST
AGAPITO OLEA - AGRICULTURAL ADVISOR
DOUGLAS ROBERTSON - LEGAL ADVISOR
LORENZO HAUSMAN - AID/W LOAN OFFICER
MICHAEL DEMETRE - AID/W ECONOMIC ENGINEER
WALTER McDONNELL - AID/W ENGINEER

STATISTICAL ANALYSIS

HECTOR SARMIENTO
CONSUELO ALARCON
MARIA CRISTINA GALAN

AGENCY FOR INTERNATIONAL DEVELOPMENT

PROJECT PAPER FACESHEET

BE COMPLETED BY ORIGINATING OFFICE

1. TRANSACTION CODE (IN APPROPRIATE BOX)
[X] ORIGINAL [ ] CHANGE [ ] ADD [ ] DELETE

PP

DOCUMENT CODE 3

2. COUNTRY/REGIONAL ENTITY/GRANTEE
COLOMBIA

3. DOCUMENT REVISION NUMBER

4. PROJECT NUMBER
514-0[redacted]194

5. BUREAU
A. SYMBOL: LA
B. CODE: 3

6. ESTIMATED FY OF PROJECT COMPLETION
FY 79

7. PROJECT TITLE - SHORT (STAY WITHIN BRACKETS)
Small Farmer Market Access Loan

8. ESTIMATED FY OF AUTHORIZATION/OBLIGATION
A. INITIAL MO. 9 YR. 76 B. FINAL FY 76

9. SECONDARY TECHNICAL CODES (MAXIMUM SIX CODES OF THREE POSITIONS EACH)
BR | LAB

10. ESTIMATED TOTAL COST ($000 OR EQUIVALENT, $1= ——)

A. PROGRAM FINANCING	FIRST YEAR B. FX	C. L/C	D. TOTAL	ALL YEARS E. FX	F. L/C	G. TOTAL
AID APPROPRIATED TOTAL	130	4,870	5000	130	4,870	5,000
(GRANT)	( )	( )	( )	( )	( )	( )
(LOAN)	(130)	(4,870)	(5,000)	(130)	(4,870)	(5,000)
OTHER U.S. 1.						
OTHER U.S. 2.						
HOST GOVERNMENT		7,000	7,000		7,000	7,000
OTHER DONOR(S)						
TOTALS	130	11,870	12,000		12,000	12,000

11. ESTIMATED COSTS/AID APPROPRIATED FUNDS ($000)

A. PROGRAM CODE (ALPHA CODE)	B. PRIMARY PURPOSE CODE	C. PRIMARY TECH. CODE	FY 76 TQ D. GRANT	E. LOAN	FY 77 F. GRANT	G. LOAN	FY 78 H. GRANT	I. LOAN	ALL YEARS J. GRANT	K. LOAN
FN	119	061		5.000						5.000
TOTALS				5,000						5,000
12. ESTIMATED EXPENDITURES				245		2,800		1,800		

13. PROJECT PURPOSE(S) (STAY WITHIN BRACKETS) [ ] CHECK IF DIFFERENT FROM PID/PRP

To increase agricultural production by improving market access.

14. WERE CHANGES MADE IN THE PID/PRP FACESHEET DATA NOT INCLUDED ABOVE? IF YES, ATTACH CHANGED PID AND/OR PRP FACESHEET.

[ ] YES [X] NO

15. ORIGINATING OFFICE CLEARANCE

SIGNATURE: Philip R. Schwab

TITLE: Acting Director USAID/Colombia

DATE SIGNED: MO. 8 DAY 30 YR. 75

16. DATE RECEIVED IN AID/W, OR FOR AID/W DOCUMENTS, DATE OF DISTRIBUTION

MO. DAY YR.

AID 1330-4 (5-75)

B. RECOMMENDATIONS

Loan	US$5,000,000
(Terms: 40 Years, 10 Year Grace, 2% during Grace -------3% thereafter)	
Total New AID Obligation-----	US$5,000,000

C. DESCRIPTION OF THE PROJECT

The proposed $12.0 million project, including the $5.0 million AID loan, will consist of two major components: access road construction and maintenance activities and institutional development of the implementing agency, Caminos Vecinales.

Loan funds will be used to shift the Pico y Pala focus from feeder road construction as an employment generating mechanism to feeder road construction as a key factor in promoting increased-agricultural productivity. The road construction funds under this project would be used, along with GOC counterpart, to build approximately 800 Km. of access roads in areas which have been selected on the basis of having a considerable socio-economic payoff, primarily measured by agricultural productivity and economic internal rate of return calculations. The Pico y Pala project will complement, although not be necessarily limited to, road construction in those areas within the GOC's Integrated Rural Development (DRI) plan. Loan funds would give equal priority to areas where related inputs and services are assured and where considerable production potential exists for the nine crops given priority under the GOC's Nutrition Plan. To insure continued benefit from project-financed roads (and earlier AID-financed roads), $1,000,000 of the GOC funds during the loan disbursement period would be used, to provide for adequate maintenance.

The technical assistance and training components of the proposed project would be used to institutionalize key factors necessary for the long-term effectiveness of Pico y Pala. The principal improvement will be the establishment and staffing of a Subproject Selection and Evaluation Office within Pico y Pala. This office, staffed by engineers, economists and agronomists and assisted with short-term technical assistance, will participate in pre-selection studies of proposed road projects in order to establish the economic rate of return and to insure that projects satisfy most of the selection criteria. The office will also initiate an impact study to provide baseline data to aid in assessing the actual impact of specific feeder road projects. A second objective of the technical assistance and training will be to instill in Pico y Pala engineers an active awareness of key design, maintenance and environmental considerations in road construction.

D. SUMMARY FINDING

On the basis of the conclusions of the Project Committee that the Project is technically, economically and financially sound, it is recommended that a loan be authorized to the Government of Colombia in an amount not to exceed $5.0 million.

The recommendation is based on the overwhelming finding that the project will have a substantial and lasting effects to improve the welfare of the poorest of the rural poor. It has been recognized that careful management of the inputs of this project will be necessary for achievement of the purposes of this loan. The Project Committee finds the various aspects of the project ready for implementation as indicated in the Implementation Plan Section IV.B.

The Project meets all applicable statutory criteria (See Annex I, Exhibit 1). The USAID Mission Director in Colombia has certified that Colombia has the capability to effectively maintain and utilize the Project. (See Annex I, Exhibit 2).

E. PROJECT ISSUES

1. The DAEC Instruction Cable (State 87272)

A. Project Rationale

Part II.B. of the PP discusses the project strategy to increase agricultural production through an attack on the transportation constraint in marketing.

B. Previous AID Experience

Section II.A. of the PP describes previous AID experience. Although available information is very limited, the roads appear to have achieved their employment generation objective. The agricultural impact could not be quantified, but interviews with groups of small farmers have shown several varied but generally positive results. Part II.B.5.c. discusses the maintenance problem and proposes a correcting strategy.

The principal problems, besides maintenance, include the need for development-oriented selection criteria and an evaluation office. The project description address these concerns.

C. Institutionalization

The institutional changes desired in Caminos are discussed in Part II.B.5.c. of the Project Description.

D. Sub-project Analysis & Selection

New project selection criteria and a methodology for project analysis are discussed in the Project Description. Small farmers are the principal beneficiaries of the proposed project. The other constraints to increased agricultural production are discussed in Section II.A. Caminos Vecinales will seek correction of GOC policies which pose serious constraints to specific subprojects.

E. Community Participation

Community willingness to provide voluntary labor during construction is a criterion included in the project selection criteria checklist. As regards maintenance, the local communities are not responsible for road maintenance, although occasionally they contribute to it out of self interest. A maintenance capacity study will focus on ways to incorporate community participation in maintenance service.

F. Cost and Labor/Equipment Mix

Section III.A. includes a discussion of costs of construction.

G. Relationship to Other AID Activities

Section II.B.4 discussed this subject.

H. Disbursement

The project has a three year disbursement period. The fixed reimbursement issue is discussed below.

I. Supervision and Monitoring

The Mission currently has a loan officer - engineer and a transportation engineer assigned to this project. They are capable of adequate supervision and monitoring of this project.

J. AID/W Assistance

Excellent AID/W assistance was provided in the preparation of the CAP and the PP.

2. The DAEC Instruction Cable (State 176842)

A. Fixed Amount Reimbursement method FAR

AID/W suggested that the Mission consider a fixed reimbursement method for this project. It has been determined that a fixed amount of AID financing can be determined before sub-project initiation. Such fixed amounts will be estimated from base unit costs for different types of terrain. Also, reimbursement after completion can be affected if some monthly progress payments are allowed. Part IV.B.2. explains how loan disbursements will be made for road construction.

B. "On-Going" Construction

All sub-projects will be considered as new projects for selection purposes from the physical point of departure of the existing connecting road. Therefore, no AID loan funds can be considered as financing "on-going" construction.

C. Maintenance

Caminos Vecinales will assume the responsibility for

maintenance of Pico y Pala roads. National Government funds will be available to carry out the maintenance. 1976 calendar year funds are programmed to more than adequately cover maintenance requirements in 1975. Caminos Vecinales will covenant to provide necessary maintenance funds as programmed in Part II.B.a.

Caminos Vecinales is preparing the mechanisms to effect such maintenance and will be assisted by the loan in the financing of a study to examine maintenance mechanisms. The GOC and AID are particularly interested in developing a sound mechanism that would allow community groups to participate in the maintenance of their own community roads.

PART II - PROJECT BACKGROUND AND DETAILED DESCRIPTION

A. BACKGROUND

1. Colombian Agriculture Sector - Summary

Agriculture continues to play the critical role in the Colombian economy, contributing approximately 30% of the nation's gross domestic product, employing almost half of the country's labor force and providing 85% of the value of exports, excluding petroleum. Despite recent progress, the sector is not, however, developing its potential sufficiently or making the optimum contribution to overall growth.

Agriculture in Colombia is highly dualistic. The older and far more populous small farmer or "traditional" subsector has subsisted over hundreds of years, predominantly in the mountainous areas of the country and along portions of the north coast. Except for coffee, the bulk of the crops produced by this group consists of the basic foods suited to the area and elevation in which they live. The principal crops grown are food (corn, potatoes, wheat, yuca, peas, carrots, arracacha and barley). There is also considerable production of dairy and beef cattle. Out of necessity, the small farmer has been primarily a "subsistence" farmer with a "no input" or "low input" operation. His technological level is low and consequently so are his levels of production. In many instances new practices have not been readily adopted even when available because of the additional risk inherent in change.

The second or so-called "commercial" subsector has developed in Colombia largely since World War II. It consists primarily of medium, and larger farms principally located in the flatland areas of the valleys and savannas and a large part of the north coast region. This commercial subsector is mainly engaged in the production of cotton, rice, oil crops, sorghum, sugar, beef, dairy and poultry. In general the commercial producer uses a much higher level of technology than the small farmer. He is more highly mechanized because his land is more suitable to mechanization and he has access to the capital required for farm machinery. However, because of the nature of the terrain, and in the lowland areas, the climate, he is faced more often with serious problems of flooding, drainage and more serious insects and diseases than his mountain counterpart. Consequently, the commercial operation requires a greater investment per unit of production and demands a higher level of technology in order to break even.

Since 1960 there has probably been only a slight shift from large to medium size farms, and no significant change in the minifundio problem. There have been, however, some significant colonization expansion on some frontiers. The work of INCORA in land redistribution and its encouragement to colonize public lands has been responsible for a great deal of this shift.

Although there have not been significant changes within land holding patterns, there appear to be an increasing number of "small farmers" that are moving into "commercial" status. Smaller owner operators who are fortunate enough to be located near a road and within a reasonable distance of a city are gradually changing their production patterns. They are producing more vegetable or other high value crops for the market and thus are rising above the "subsistence" level.

This probably accounts for the interesting phenomenon discussed in the Agriculture Sector Analysis, where data exists showing that a steady decline in income per acre results as farm size increases. This may indicate that on the average the smaller farms are producing on a greater proportion of their land than are larger farms. At least a part of the reason for this, however, is because larger farms tend to be located on poorer land, some of which is suitable only for extensive production or is limited by lack of infrastructure. Income per acre harvested may be quite different; nevertheless, the data indicates that small farms are making relatively good use of their land resources. A very large part of the potentially productive agricultural land in Colombia is only beginning to be utilized for agriculture or is not being used at all. This consists of a sizeable portion of the eastern Llanos, the southeastern forest (or Amazonia jungle) area and the lower Magdalena river valley, including large sections of the northern lowlands. Most of this area has little or no infrastructure. Most also has very scarce or extremely scattered population at present, although colonists are beginning to push rapidly into the western edge of the Llanos and the western edge of the Amazonian area in Putumayo and Caqueta. The total agricultural potential of this undeveloped area is estimated to be considerably greater than the total present agricultural production in Colombia.

Besides transportation which is discussed elsewhere, there are many serious constraints to the development of the rural populace. The majority of farmers live in the mountainous regions between 3,000 and 9,000 feet. (A very high proportion of the land in these areas is too steep to mechanize and the constraints imposed by the nature of the terrain are sufficient to preclude any significant increase in farm size in this area. A large part of the land that is sufficiently level to permit a high degree of mechanization is presently in areas of limited accessibility or with limited services. These highland regions are further characterized by serious problems of erosion, poor soil, etc. Secondly, traditional farmer yields have barely increased in the past decade, since this group has little access to good land, necessary production inputs and technology, transportation and stable marketing arrangements. Between low productivity and high intermediary costs, the return to the small farmer has been low.

2. Characteristics of the Rural Populace

Rural Colombia represents approximately 40% (9.5 to 10 million) of the total population. A 1970 DANE survey indicates that 48% of the available male labor force and 6.5% of the female labor force are economically active in agriculture. Estimates of unemployment and under-employment vary widely, although the Colombian Agriculture Sector Analysis estimated that

overall yearly unemployment and under-employment is 25% (P.170).

Incomes of most farmers are limited; an estimated 60% of the rural populace have monthly cash incomes of less than $17 (compared to under 30% in urban areas). Most of the rural inhabitants are traditional small farmers. Approximately half (48%) of the rural families operate their own small farms, although only 24% receive wages solely from agricultural work. A small number (13%) both operate small farms and receive agricultural wages.

Farm Size in Colombia, as in most Latin countries, is sharply skewed to small hodlings. Farms under 20 hectares constitute 94% of the land under cultivation for most food crops. The Sector Analysis estimates that almost two thirds of all farms are less than five hectares in size (P.14).

Education in the rural areas is minimal. An average of two and one-half years of schooling for rural children gives a meager literacy base, but one which enables continuous informal information (ag publications radio extension courses) to be effective. Rural Health servicas leave much to be desired in Colombia and improvement in the general rural health would most likely result in increased productivity per workers. Under the GOC Nutrition Plan Strategy rural health is a sector that will receive considerable attention.

3. GOC Development Strategy

The Colombian Government that assumed office in August, 1974 has moved slowly in establishing its development priorities. It has, however, already indicated that it will give the highest priority for government investment to programs aimed at improving the quality of life of the lowest half of the income distribution. In early 1975, with the publication of its National Health and Nutrition Plan, the GOC provided a central focus for its development strategy. In the short run, it believes that improved nutrition is the most effective means by which the poorer half of the population can be assisted.

The GOC nutrition strategy has two basis objectives: (1) to ensure that more and higher quality food reaches the poorer elements of the population, both urban and rural, and (2) to increase the absolute availability of food through the stimulation of increased agricultural production. This second element is two-pronged, assuming that increased agricultural production will be reflected both in the availability of additional food for the urban poor and, by increasing farm incomes, in improved nutrition among agricultural workers. The proposed project addresses the second strategy element -- stimulation of agricultural production.

The GOC Nutrition Plan identifies seven general headings and 26 specific projects to be developed to achieve the two basic objectives. The third general category of projects is: production increases of basic foods for direct consumption. The fourth general category of projects is improvement in food processing facilities and marketing infrastructure. Within these two general categories in the Plan, a specific project was identified, to construct Pico y Pala (labor intensive construction) access roads to link up existing and potential markets as one means of stimulating increased production of specific crops. The Nutrition Plan has identified the need for increased production of the following nine crops: beans, peas, soybeans, rice, wheat, corn, potatoes, yuca and plátano.

The GOC agricultural production strategy has concentrated primarily upon achievement of production increases of these priority crops by small farmers. Towards this end, the GOC is in the process of selecting six to eight priority areas which contain a high concentration of small farmers. Approximately 63,000 small farmers, defined as farmers with land holdings of less than 10 hectares, are included. These areas will constitute the integrated development regions (DRIs) that will be the focus of a large-scale GOC and international donor assistance effort. For a discussion of the DRI areas see Annex II.5. Both the World Bank and the IDB have expressed interest in providing substantial support (upwards of $100 million) to the DRIs.

The DRI program has two basic objectives: (i) to rationalize the linkage of the rural economy to the urban markets, and (ii) to increase real rural income and employment. To accomplish these objectives, the DRI program proposes to integrate a wide variety of economic and social activities aimed at improving the quality of life of the rural inhabitants of these regions. The activities include the expansion of health and education facilities, rural electrification, and potable water and sewage. The main thrust of the DRI program, however, is the stimulation of agricultural development through provision of technical assistance, agricultural inputs, credit, marketing facilities and roads. The latter will include both secondary roads (financed by the international banks) and rural access roads (financed by the GOC and the proposed AID loan).

4. USAID Role in GOC Strategy

USAID's approach to Colombia's agricultural development has evolved over time based upon our assessment of the rural sector, past AID experience and the present Congressional emphasis on food and nutrition. The major limiting factors to Colombian agricultural development do not in general appear to be either major policy considerations, trained manpower, or even financial resources. Colombia's matrix of policies, with the notable lacking of a well-defined national marketing policy (which will be approached by a newly formed task force within the Ministry of Agriculture), provides the basis for wide-spread agricultural development. Colombia's agricultural credit program (Fondo Financiero Agropecuario) provides a mechanism for allocation of a specified quantity of available

credit to the rural sector, rediscounting of commercial and public bank credits to farmers, and the capacity to expand overall credit to the agricultural sector, through internal or external borrowings by the Central Bank. Further, it requires that commercial farmers hire technical assistance in conjunction with their loans to be paid for by the farmer, and provides for a source of revenue to cover the costs of technical assistance to be given to small farmer borrowers.

The Government has an ongoing program to support the prices of major commodities at levels announced in advance; these levels are reviewed and adjusted on an annual basis; Colombia has a workable land reform law and a presumptive tax on land to encourage its most appropriate utilization. Past Colombian laws have provided incentives for exports in the form of certificates for tax rebates based upon the value of the exports. With the present emphasis on small farmers, there is little fault that can be found regarding the broad policies pursued in Colombia.

Although there is need for additional trained personnel in the agricultural sector, and AID should continue to support such training, Colombia can be credited with a large number of well-trained and competent personnel in the agricultural sector. As an example, among professionals employed by ICA, 138 have been trained at the Masters and 41 at the PhD level, many as a result of previous AID programs. Further, graduate agriculture training at the Masters level is presently available within the country. In summary, there exists a sizeable cadre of trained manpower in Colombia to implement rural development.

Finally, in general terms, financing is probably not a major stumbling block. As mentioned earlier, bank credit for agriculture, including small farms, is allocated from the total credit available within the banking system and can be expanded by rediscounting and through Central Bank internal and external borrowing. The World Bank is presently reviewing a US$60 million loan to the GOC to expand the credit through this system for agricultural, livestock and agro-industrial development. At the same time, project preparations and negotiations are underway for IDB and World Bank loans of US$120 million in support of the Rural Integrated Development program.

The development of the rural sector is more complex than simply devising a national program directed toward providing modern inputs, credit, technical assistance and marketing to small farmers. The complexity lies in such questions as how to develop, implement and administer the subprojects which provide new benefit streams, credit delivery systems which are cost-efficient to the lender and relate to the risks faced by the borrower, dissemination of new technology to a large number of farmers with a limited number of extension personnel,

and how to provide more efficient marketing to benefit both the farmer and the consumer. The problems at the implementation level are where Colombia's knowledge of rural development breaks down.

USAID's experiences with sector loans, in a large part directed toward credit for small farmers, pilot integrated rural development efforts in small farm areas, and research and extension has led us to focus greater emphasis on collaborating with the Colombian government in developing projects which provide the methodological and technological basis for implementation of rural development on a broad scale. It is at the project level, especially with respect to exploring, developing and proving alternative approaches to solving parts of the rural development puzzle, that we believe AID can make an unique contribution in Colombia.

This approach will undoubtedly result in series of relatively small project loans which, on the surface, appear not to provide a coordinated AID approach to rural development in Colombia. This concern must be taken in the context of World Bank and IDB's willingness to finance rural development on a large scale and the lack of rationale for USAID/Colombia to duplicate such efforts, especially in terms of AID recognition that our resources alone would be insufficient to accomplish the rural development task in the near term. Given the availability of external resources for large scale rural development and the perceived need for improved methodological and technological basis for rural, USAID/Colombia has chosen to focus on pilot programs for the purpose of testing and institutionalizing new approaches which have a potential for affecting many people. Thus, we believe that "we may have a comparative advantage in research and pilot programs of limited scale, developing new approaches with a low per capita cost that LDC's (Colombia) can afford to replicate on a wider basis". Thus, USAID/Colombia would argue for assisting Colombia with the development, proving (in the field) and institutionalizing new approaches to specific rural development problems through relatively small project loans. In this way, it is believed that our limited financial resources can have a major impact on the poor majority by providing the basis for future broad-scale programs funded from Colombia's own resources and external resources from other international lending institutions.

5. The Problem

An analysis of the Colombian agriculture sector indicates that for a substantial number of farmers the chief constraint to increased agricultural production is a lack of access to external markets. This can be traced to the geography of the country, which has set the pattern for Colombia's agricultural growth. The three towering ranges of the Andes branch northward from the southern border and separate the more densely settled portions of the country into distinct and frequently isolated geographic areas. Although improved communications and transportation have begun to break through the inter and intra-regional isolation, large numbers of small farmers are still only marginally linked to external markets.

Caminos Vecinales estimates that approximately 10% of Colombia's rural population (900,000) is not served by a road of any kind, including at least 80 known municipalities and 620 rural communities. Without ready access to markets for their agricultural products there is little incentive for farmers to produce a marketable surplus.

Given the stress placed by the new Government in its National Nutrition Plan on solving the problems of malnutrition and under nutrition by increasing the availability of food for the poorer 50% of Colombia's population, this untapped potential source of supply, represented by farmers with restricted market access, is assuming a growing importance.

The large increases in urban population have made the problem of stimulating additional food production increasingly acute. The population dynamics of Colombia have resulted in very rapid changes in the urban-rural population mix, with a result that Colombia has one of the highest percentages of urbanization in Latin America. In 1972, approximately 55% of the total population was living in urban centers. This percentage is expected to continue to increase. By 1980 it is projected that at least 17 Colombian cities will have populations in excess of 200,000 (source: DANE - Proyecciones de Población).

This continued growth of urban centers has created a strong demand pull on the food production/distribution system. "Along with the growth of these large urban centers there is an emerging national market made possible by improvements in the transportation and communication networks. As a result, there is now increasing regional specialization in agricultural production and a gradual lengthening of the distances over which products are transported to reach the ultimate consumer". (Colombian Agricultural Sector Analysis Papers, p.44).

To a large extent, however, the isolated farming communities are unable to respond to or benefit from this increased demand. Those farmers who comprise the target group for purposes of this project are essentially excluded from potential marketing outlets and from the benefits accruing to increased production. Without regular access to agricultural collection and marketing centers the demand pull function cannot elicit the desired supply response from farmers, thus resulting in foregone income opportunities and a limited potential for income redistribution on the production side, as well as a reduction in the absolute availability of food on the consumption side. Once access roads are constructed, however, as evidenced in sample studies discussed in Section [illegible], increases in agricultural production can be expected to result.

6. Pico y Pala Program

An Agreement signed on November 8, 1971 between the Ministry of Agriculture and the Ministry of Public Works, set forth the specific responsibilities of each party for the implementation of the Pico y Pala feeder and access road program. The Inter-Ministeral Agreement

set up a coordinating committee composed of representatives from the Planning Office of the Ministry of Agriculture (OPSA), National Planning Department, Caminos Vecinales, and AID. This Committee was responsible for the overall direction of the program and for selecting the priority areas where the roads were to be built. The factors taken into consideration in selecting the priority areas were:

1) Pilot areas previously selected for intensive development by ICA (Agriculture Research Agency).

2) Areas where the local farmers have indicated a high interest and are willing to contribute either money, labor, or both.

3) Areas where the agriculture production potential is high.

4) Rural areas where farm labor is under-utilized.

5) Areas where the terrain is suitable for pick and shovel construction.

During 1972, the program was slow in getting started for two reasons: the selection process was time-consuming; and normal start-up delays. As a result, expenditures were below the programmed levels, despite the fact that all the AID funds available to Pico y Pala from Agriculture Sector Loan 064 were disbursed. Actual construction work was not initiated until June 1972, and only 65 kilometers of road was constructed in 1972. In 1973, the program began to operate at its expected levels of efficiency. Approximately, 140 kilometers of roads were constructed.

In 1974, Caminos was handicapped by delays with regard to AID's reprogramming efforts under Loan 067 and the confusion surrounding the authorization of Agricultural Sector Loan VI 514-6-071 (it was deauthorized in late 1974). As a result, Caminos did not receive the AID loan funds until late 1974 and had used about 32 million pesos for its early 1975 expenses. In spite of these problems, Pico y Pala still constructed 132 kilometers of road in 1974, at a cost of about 60 million pesos.

Table 1 shows a breakdown of kilometers of road constructed by year and by Departments, including their estimated total construction cost. From the initiation of the program in June 1972 to December 1974 the work completed consisted of 435.6 road length kilometers of excavation, 157.3 kilometers of gravel surfaced road, as well as bridges and other works for 221.7 kilometers of roads. Averaging these three figures results in total road construction of about 337 kilometers at a cost of $4.1 million. Caminos Vecinales estimates that Pico y Pala has created employment for an average of 100 farmers per month of road construction, or a total of approximately 14,000 jobs.

The Pico y Pala program under the AID Sector Loans increased its annual expenditure rate from 14 to 61 million pesos from 1972-74. Receipts increased from 36 to 82 million pesos in the same period. A major problem affecting the operation has been the irregular flow of funds from all sources. The GOC budgetary process was slow, with few funds available during the first half of the calendar year. The flow of AID funds was interrupted when the GOC delays in certifying AID reserves or when AID, for policy reasons, was not disbursing funds to the agriculture sector. These problems are normal to many GOC agencies, but were particularly acute for Pico y Pala. This program could not function without cash in hand. Work on feeder roads did not begin or continue until regional offices had cash in hand to pay workers. Pico y Pala local offices had to cease planning and construction until the GOC and/or AID worked out the specific budgetary problem impeding the flow of funds.

USAID became particularly concerned over the flow of funds problem during the implementation of the sector loans. To prevent a recurrence, USAID in this loan has proposed a direct disbursement system passing funds directly to Caminos Vecinales, under the proposed project.

Since 1972 Caminos Vecinales has received US$2.6 million from AID for its Pico y Pala (Pick and Shovel) program from Agricultural Sector Loan funds, channelled through the Ministry of Agriculture. Table 2 presents a breakdown of that assistance from 1972 through 1974.

7. The Agricultural Impact of Pico y Pala

Only one extended study of the impact of Pico y Pala was completed during AID's two years of experience with the program. The study, The Impact of Pico y Pala Road Building Project in Some Colombia Minifundia Areas, was completed in May 1974. Michael and June Jennings visited several road sites to survey the impact of the feeder roads on agricultural technology, marketing, production, farm labor, income, health and education.

The general objective of the program that they surveyed was to provide employment in rural areas, with agricultural production as a secondary goal. The target group for the program tended to be the workers on the roads, rather than the small farmers affected by the roads. The Jennings Report saw the program's benefits as relative to the employment objective: (a) a source of offseason employment to farmers to discourage urban migration; (b) the incentive nature of the employment which paid workers according to the work done; and (c) the road construction was able to proceed at several points at the same time, increasing total employment.

Given the employment objective, the Jennings Report attempted to examine how workers used the additional income. Unfortunately, little solid information was encountered. Some of the workers who were small

TABLE NO. 1 PICK & SHOVEL PROJECT: Kms. OF ROAD CONSTRUCTED AND COST. 1972-1974 (US$.000)

Departments	1972 Kms. Constructed	1972 Cost (US$)	1973 Kms. Constructed	1973 Cost(US$)	1974 Kms. Constructed	1974 Cost(US$)	1975 Kms. Constructed	1975 Cost(US$)
Antioquia	2.46	13.1	5.20	69.7	3.14	52.4	10.80	135.2
Bolívar-Sucre-Magdalena	-	.5	-		.50	34.9	0.50	35.4
Boyacá	8.15	31.5	25.20	69.2	7.77	37.1	41.12	137.8
Caldas	3.40	43.3	8.90	183.8	16.90	368.9	29.20	596.0
Cauca	16.93	224.7	29.10	329.0	9.97	345.4	56.00	899.1
Cundinamarca	8.51	91.9	25.60	248.5	7.69	122.5	41.80	462.9
Chocó	-		3.50	40.2	5.30	100.5	8.80	140.7
Guajira	-		-		4.50	20.1	4.50	20.1
Huila	-		-		17.00	164.4	17.00	164.4
Nariño	1.72	18.8	7.90	95.8	8.28	103.9	17.90	218.5
Norte de Santander	9.69	36.8	6.40	98.0	16.41	179.6	32.50	314.4
Risaralda	3.82	49.3	4.30	60.8	21.08	241.3	29.70	351.4
Santander	0.63	19.0	3.90	55.7	.87	85.0	5.40	159.7
Tolima	3.00	26.2	3.10	16.4	11.60	186.2	17.70	228.8
Valle	6.57	65.1	16.70	147.6	.33	64.9	23.60	277.6
Meta	-		-		.60	14.4	.60	14.4
TOTALS	64.88	620.2	140.30	1,414.7	131.94	2,121.5	337.12	4,156.4
Exchange Rate: US$1.00		22.88		24.89		28.69		

Source: Caminos Vecinales
The figures shown in this table as "kilometers constructed" are a weighted average of the total kilometers excavated. Kilometers of gravel surfacing as well as bridges and other works for kilometers of roads.

TABLE NO. 2 PICK & SHOVEL PROJECT RECEIPTS BY SOURCE 1972-1974 (US$.000)

	1972	1973	1974	TOTAL
GOC (O.O.P.P.)	338.5	791.5	1,030.7	2,160.7
Coffee Federation	295.5	75.3	303.2*	674.0
AID	922.2	149.1	1,526.7	2,598.0 1/
TOTALS	1,556.2	1,015.9	2,860.6	5,432.7
Exchange Rate: US$1.00 =	22.88	24.89	28.69	

1/ Includes US$790,519 peso equivalent released to Caminos Vecinales on December 1974 but not spent in 1974.

farmers said they used the income to purchase agricultural inputs such as fertilizer and seeds. Yet total use of such inputs in the area studied did not appear to rise, suggesting the income was only used to pay higher prices.

Perhaps the most important findings in the Jennings Report related to the need to give higher priority to the agricultural impact of the roads before construction. Some expected agricultural benefits did not occur for example, the affected farmers did not report any significant increases in fertilizer use, pesticides, seeds, contour planting or irrigation. Another problem was the absence of coordination with the ICA extension service; technical advice was often not available. (Subsequent USAID follow-up in some areas has noted that new technology did begin to appear in the areas after the Jennings Report was completed.) Better communication regarding placement of the roads was needed as farmers reported little interaction between Caminos and the towns. Farmers were concerned over the environmental impact of the roads. There was some damage to farmland due to poor design and location. A clear need was for a land terracing and soil conservation program. Soil studies and research for methods of earth stabilization were needed prior to construction.

On the positive side, the Jennings Report noted significant production and marketing improvements. There was increased production of traditional crops and increased commercialization of animals and animal products such as milk. In marketing, Pico y Pala roads substantially reduced travel time in sending produce to markets, enlarged the market area, opened markets for highly perishable produce, and reduced overall produce damage. Reduced travel time allowed farmers to travel to market towns more frequently to negotiate sales directly and educate themselves on market conditions and prices. Reduced travel time eliminated staying overnight in the marketing town and other travel related costs. Trucks and buses were effectively using the Pico y Pala roads, promoting an intermediary transportation industry which was not only hauling produce but was transporting agricultural inputs to farmers. The Report indicated transportation costs had been reduced 50% after truck transport was initiated. (USAID field trips have confirmed a 33-50% reduction in transport costs). The farmers in the survey reported that the roads helped them receive GOC social services. Medicines and medical help were more readily available. Educational facilities, including materials were more accessible to rural children.

In summary, the Jennings Report concluded that the impact of the roads was generally positive. Some of the negative findings can be traced to the fact that several of the roads visited were newly constructed, and the inputs and assistance were not yet coordinated. Still, there appear to have been significant agriculture and marketing benefits accruing to the project's beneficiaries, despite the fact that the roads were basically an employment generating mechanism.

Recent USAID field trips have attempted to test some of the above mentioned conclusions, especially on four points: increased land cultivation, technology levels, crop switching patterns and availability of GOC social services. The results have been mixed. In the Silvia area, for example, the major finding was that fertilizer use had increased substantially, resulting in more productive cultivation of small plots - 0.25 to 2.50 hectares each. The local farmers attributed the increase in fertilizer use solely to the reduction in transport costs, (an estimated 33% savings) and the increased volume efficiency. On the other hand, the local farmers reported no increase in contact with extension agents or other TA, there were no seed or fertilizer salesmen in the area. There was little change in cropping patterns or area under cultivation. The farms were so small that all land was being cultivated before the road came. There was also no evidence of increased use of GOC social services; the health posts and schools had been in use prior to the road. The impact of the road to Silvia was to lower transport costs for produce and inputs, and increase yields and income --the latter was attested to by evidence of substantial new housing construction.

In Santander Department, USAID advisors were told by local farmers that land cultivation had increased considerably, especially in corn and sugar cane. Most of the farmers, who averaged about 2 hectares of land, indicated they had neither increased their use of fertilizer nor done any significant crop switching as a result of the road. There were some indications that more children were going to school as a result of the road.

In May 1974, Mario Camacho of the Ministry of Public Works evaluated the Pico y Pala program and found:

a. The program provided over 14,000 jobs;

b. Average salaries were double the rural minimum wage;

c. Land cultivation near the roads increased by 30%;

d. Volume of production near the roads increased by 40-60% depending on the crops.

e. Typical production increases were in potatoes, corn, sugar cane, coffee, beans, citrus, fique and tobacco;

f. Transport costs were reduced by 60-70 and transport time by 70%;

g. There was little evidence of crop switching or of higher technological inputs;

h. Road construction salaries were used to buy seeds, build new housing, and repay Caja Agraria credit.

Camacho provided little data or analysis to support his conclusions. The impact of the roads therefore is still subject to further confirmation.

In conclusion, existing field experience and evaluation of the impact of the feeder roads suggests positive results, but without a consistent pattern. In some municipios land cultivation increased; in others, fertilizer use increased and encouraged more intensive farming on small plots. The common effect on some 30-40 small farmers in the sample is that their incomes did increase significantly, due to lower transport costs and/or the ability to transport a greater volume of produce and inputs.

8. Other Caminos Vecinales Programs

The Pico y Pala program is aimed at increasing agricultural productivity, access to markets, and increasing rural employment. Its roads are designed for daily traffic of less than fifty vehicles and are constructed by labor intensive methods. Two other Caminos' programs - the IDB and the Ordinary Program - operate under different philosophies. They concentrate on roads in flat areas with fifty to one hundred vehicles per day, using high equipment and lower labor components. The Ministry of Public Works builds the more heavily travelled roads to higher specifications.

a. The IDB Program - In January 1970, Caminos Vecinales expanded its feeder roads program with the help of an IDB project loan for construction of 45 secondary roads, totalling 1,550 kms. of construction over a period of four years. The sub-projects were to be primarily special and first order roads (more than fifty vehicles per day). This $36.6 million dollar program was financed by an IDB Loan of US$ 17 million and by GOC counterpart of $19.6 million. The GOC was principally responsible for administrative labor costs, while the IDB paid for construction materials, TA in road design and supervion, consultant services, and machinery.

The project selection criteria for each road was designed to insure that the internal rate of return exceeded 10 percent and that 50 percent of the potential increase in the agricultural production in the affected area could be attributable to the road. One such optimistic study utilizing this criteria was done in December 1970, by Roberto Solarte, Section Chief for Caminos Vecinales in Caldas. He completed a socio-economic evaluation of a proposed IDB financed access road, San Felix-Valle Alto. He concluded that the 25 kilometer road would have a zone of influence of 15,000 hectares, contributing to a 45% increase in the value of agricultural production after the fifth year of the road. Future production of potatoes would increase by 39%, wheat by 82% and barley by 75%.

a. Continuation.....

Cattle production would increase by 58%. After 9 years of use, total net benefits from the road would be about 2.4 million pesos. Transportation costs were estimated to diminish by c$0.87/ton due to the road construction and by another c$0.43/ton due to the higher volume of traffic. The IDB's experience to date has been mixed. IDB officials indicated little has been done to measure the actual rate of return and production increases. As of December 31, 1974, construction had not made expectations - 1,107 kms. had been constructed. The IDB was pleased with the engineering work under the program. However, despite a $2 million IDB-financed investment in maintenance equipment, the IDB indicated dissatisfaction with the Departmental maintenance of the secondary roads.

b. The Ordinary Program

From its inception, Caminos Vecinales has received significant financial resources from other GOC agencies that have asked CV to build specific roads. These include feeder roads requested and financed by several Colombian Departments, Juntas de Acción Comunal, and other groups. The Ordinary Program has constructed 6,134 kms. of standard equipment built roads, valued at $1,172,000 pesos). The following is an illustrative list of the kinds of projects under this program:

1. The National Institute of Radio and TV (INRAVISION): a road of 32 kms. to facilitate the operation of a transmitting tower for the Llanos Orientales.

2. The Colombian Institute of Electric Power (ICEL): feeder roads to important hydroelectric power dams.

3. INCORA: penetration roads to the eastern plains, with a total investment of $60,000,000 pesos. At present there are 200 kms. built under this colonization project.

4. The National Federation of Coffee Growers: $23,000,000 pesos of roads in coffee growing departments.

B. Detailed Description of the Project

1. Goal

The program goal is to improve the level of welfare among the rural poor. The improvement of welfare among the target population will be measured by increases in income, improvements in nutritional status, changes in dietary habits and incidence of morbidity among the target population. Additional indicators of the loans impact on the target population will be developed as part of the impact study financed under this loan. The measurement of the loan's impact will be an integral part of the functions of the Caminos Vecinales Evaluation Office. This office will conduct a program of continuous impact evaluation and report the evaluation findings to A.I.D. both upon completion of the evaluation and within the context of annual reports which are to be presented to A.I.D. as part of the Mission's reporting requirements for annual evaluation of ongoing projects. The means to verify achievement of the goal and subgoal will be provided by project required studies of the before and after status of the level of welfare and nutritional well-being. The projects goal achievement is based upon the hypothesis that small farmer welfare is restrained by his limited access to markets and social services, and that this access obstacle can be overcome by the construction of low volume, labor intensive access roads.

2. Purposes

One of the means of reaching the program goal is through construction of access roads to farming communities to integrate them with public and private sector activities dependent upon transportation. This relates to the basic purpose of this project which is to stimulate increased agricultural production among small, heretofore isolated farmers, principally by improving their access to markets and reducing transport costs. A related purpose is to open those areas to government and private sector institutions and services, particularly agriculture, education and health. A secondary purpose is to introduce institutional improvements in the agency implementing the project, Caminos Vecinales, particularly in project selection and upgrading of technical personnel. A lower priority purpose is to supplement the income of underemployed agricultural workers by providing them with temporary employment. It is anticipated that those farmers will use some portion of this income to make farm improvements or purchase agricultural inputs, which in turn is expected to result in increases, albeit unquantifiable, in agricultural outputs.

3. End of Project Status

The Government's identification of a lack of transportation as a major constraint to increased agricultural production corresponds to the conclusions of the USAID sector analysis. As the analysis suggests, without transport the agricultural sector would be little more than a mass of subsistence farmers scattered throughout the country. Agricultural production patterns in Colombia are largely determined by the accessibility to markets and the availability of production inputs. Both of these are directly related to the availability and cost of transportation, which in turn is related to the existence of access roads.

In examining this relationship, past experience indicates that once access roads are constructed certain benefits are likely to occur to farmers living in the road's area of influence. Without additional inputs, one can expect a reduction in the cost and time of transportating agricultural products and inputs (costs are estimated to decline by some 50%) and an expansion of the marketing opportunities open to the farmer. Together these factors should induce increases in agricultural production in at least one of three ways:

(i) bringing presently idle land into production (which may include land that is "involuntarily" idle, i.e., land lying fallow could be brought into regular production with the addition of fertilizers and soil nutrients);

(ii) improvement in yields by changes in production technology, i.e., use of hybrid seed, fertilizer, irrigation, etc.; and,

(iii) increasing the value of output by switching to crops with a higher market value per unit of land.

The list of expected benefits that are likely to occur may be expanded to include the following, although the direct economic impact of an access road will still be measured in terms of increased production/income accruing to the target farmer.

(i) increased marketing opportunities which permit farmers to increase production beyond the volumes required for on-farm and local consumption, in accordance with demand existing in more distant but now accessible markets;

(ii) greater efficiencies in the use of local transport (economies of volume, reduced transit time) which should be reflected in lower transportation costs. Such benefits may be passed along in the form of lower prices of agricultural inputs to farmers and lower food prices to urban consumers;

(iii) increased likelihood of receiving agricultural services from government agencies and the private sector, including agricultural extension services, veterinary coverage, assistance from marketing cooperatives, credit agencies, equipment repairs, and others;

(iv) more ready access to storage and processing facilities, providing farmers with marketing outlets for seasonal crops and tending to stabilize prices;

(v) stimulation of production of perishable crops, e.g., fruits, vegetables, milk products, eggs, etc., which depend on rapid access to markets to avoid spoilage, or livestock production, where truck transportation greatly reduces weight losses among animals;

(vi) promotion of direct social benefits, including improved access to health, education, public utility and other social services.

Indirect economic, social and political benefits are also likely to accrue to project beneficiaries in varying degrees. The overall objective, however, is that of facilitating the entry of an increasing number of relatively isolated farming communities into the economic mainstream of the country.

4. Important Purpose-Related Assumptions and Constraints

The feasibility analysis of this project has examined and rejected the simple assumption that once access roads are constructed, other inputs and expected project benefits will flow as a matter of course. Instead, the project committee has attempted to analyze and address possible constraints which may keep the project from realizing its full potential. This included an examination of the other external factors that influence increased agricultural production -- credit, technical assistance, availability of agricultural inputs, suitable technology, transportation, marketing opportunities and adequate demand.

For those access roads to be built in the DRI areas and with respect to credit, technical assistance, agricultural inputs and suitable technology, the anticipated GOC-IDB-IBRD development program in the DRI areas is expected to make available adequate production inputs. Since the subject loan will be complementary in those areas, care will be taken to coordinate road selection with the related activities.

The Board of Directors of Caminos Vecinales has representation from all the major GOC agencies active in the agriculture sector and will ensure that such coordination takes place.

In other areas of the country, the project selection criteria will require a determination of the adequacy of existing and proposed mechanisms for providing necessary production inputs. In addition, the federations supported by the AID Rural Cooperatives Development loan will be almost exclusively active in areas that contain a concentration of small farmers. The proposed FY 76 Small Farm Development loan will concentrate on developing and field testing production technologies specifically aimed at the target small farmers. In both cases, an effort will be made to coordinate the various activities to maximize the respective project benefits. See also Part II.A. for a discussion of credit availability.

As regards marketing activities, the national marketing federation (CECORA) will receive at least US$1.5 million under the AID Cooperative Loan to finance marketing investments that are identified as being particularly responsibe to small farmer production patterns. In addition, the DRI program will contain a marketing element designed specifically to respond to the anticipated increases in production.

A loan is being prepared to assist two service organizations active in the rural areas, the National Apprenticeship Service (SENA) and the Acción Cultural Popular (ACPO). SENA will provide skills training in basic agriculture- related activities and ACPO will provide courses on rural leadership training. Both activities are expected to benefit members of farming communities serviced by the access road loan.

In each instance, the accessibility of rural inhabitants to municipios that are already linked to outside services and markets is a necessary (though not sufficient) condition to their receiving similar benefits. At the very least, access greatly increases the likelihood that government and/or private services will become available to the target group.

No constraint is evident with regard to demand. For one thing, the Nutrition Plan highlighted the necessity for increasing production of nine principal crops; most of these are crops that are grown by small farmers who will participate in the program. For another, the anticipated production increases will come from just over one percent of the total farms in Colombia and are therefore unlikely to raise any difficulties with regard to absorbative capacity.

One area of marketing which does appear to present an immediate constraint is that of transportation. Most agricultural production is currently moved by truck; this is expected to be the case in the areas of influence of the roads to be constructed under the proposed loan.

The growth in the capacity of public service truck freight in the country has been falling behind the growth in G.N.P. since 1967. Because transport requirements generally tend to increase at a faster rate than national income in a developing economy, some transport officials fear that this may be indicative of an impending shortage of truck transport. If so, it could seriously affect the marketing of farm products as well as the timely delivery of agricultural production inputs.

The national truck fleet has been increasing at a rate of about 4 percent annually, which has not been sufficient to meet the needs of the country. In 12 Asian countries, for example, the annual increase in road and rail traffic during the 1950's varied between 6 and 20 percent , while national income grew at a rate of 2 to 5 percent per year. In other words, it is not unusual for traffic to grow at multiples of 2 to 4 times that of economic activity. 1/

Figure 1 shows the relationship of the actual growth of total public service truck capacity for Colombia in tons 2/ as compared to a 7 percent GNP growth rate. It is interesting to note that from 1957 to 1966 the total public service trucking capacity and GNP were growing at or near the same rate. However, between 1966 and 1969 the trucking capacity had fallen behind GNP by almost 10 percent where the reverse should have been true. This would certainly indicate the development in the near future of a serious shortage of truck transport capacity. As this shortage becomes more pronounced the first and some of the heaviest losses to occur may be in agriculture, where the transport requirements are highly seasonal, where the products are perishable or semi-perishable.

This slowdown in the growth of truck freight capacity can be largely traced to a 1967 policy decision of the GOC to encourage local assembly of motor vehicles, utilizing an increasing percentage of local parts. At the present time, locally assembled trucks must be 32 percent by weight Colombian parts. By 1970, locally assembled motor vehicles

---

1/ "Sector and Project Planning in Transportation" by Hans. A. Adler.

2/ Las Empresas y el Parque Automotor de Carga de Servicio Público, Características - Corporación Financiera del Transporte, Octubre 1969. Inventario Nacional Automotro de Carga, Insituto Nacional del Transporte, Marzo de 1970.

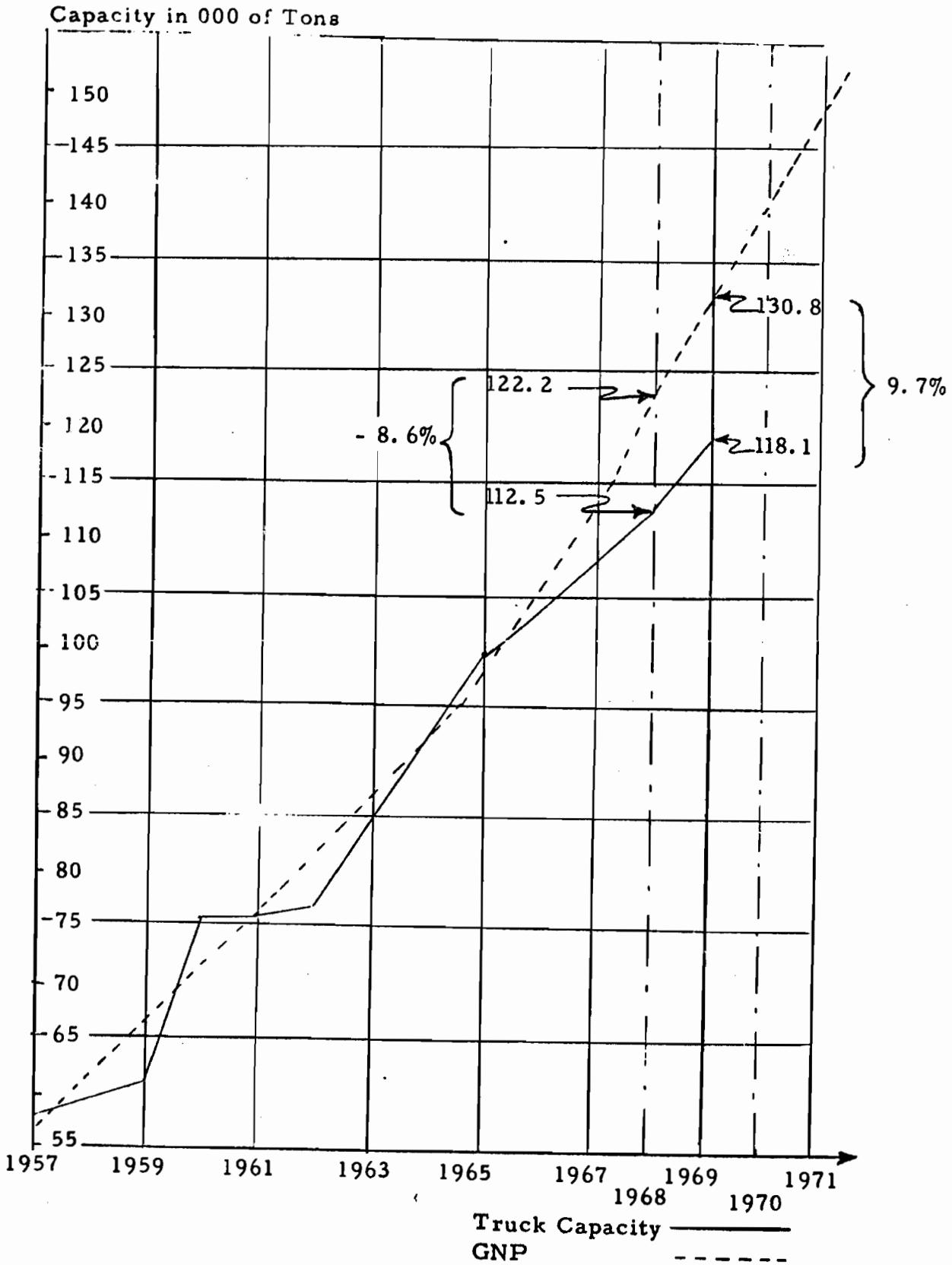

Figure 1 - Total Tons of Public Service Truck Freight Capacity in Relation to a GNP Growth Rate of 7%

surpassed imports. While transport is not presently a constraint, The Project Committee recognizes that transport may pose a potential future constraint in marketing the agricultural produce generated by the project. The GOC action in liberalizing import duties on trucks is an obvious step in addressing the constraint, although the adequacy of the measure cannot yet be determined.

5. Planned Outputs

a. Road Construction

In preparing their original request for AID financial assistance to the Pico y Pala program, Caminos Vecinales prepared a four year investment plan, covering 2,282 kilometers of labor-intensive feeder road construction.

The overall plan, listed in Annex II, Exhibit 1, had several serious deficiencies. Financing was not available for the entire Plan. Neither AID nor the GOC was willing to put up their entire $15 million shares. Furthermore the Plan projected a four-fold increase in Caminos' annual construction capacity from the current 130 kilometers to about 550 kilometers. This increase was highly unrealistic. Finally, the Plan provided no indication of the expected developmental impact of this massive feeder road effort.

During the Intensive Review, USAID and Caminos Vecinales developed a more realistic aggregate investment plan for the disbursement period of the proposed project. In total, approximately 890 kilometers would be constructed, or an average of 297 kilometers annually -- a significant but feasible increase. And as the Implementation Plan proposes, 89 sub-projects would be completed and 22 sub-projects initiated.

In addition to the AID/GOC program above, the Federación de Cafeteros (Coffee Federation) is expected to contribute up to $60 million pesos over three years to Pico y Pala for construction of feeder roads in predominantly coffee growing areas. These roads will not be subject to the selection criteria and analysis developed in the PP, and as such are not included in the project.

Having agreed upon aggregate levels of output and financing, USAID and Caminos then began to discuss a means to narrow down the 2,282 kilometers of the original Plan to the 890 kilometers which seems to be a feasible output during the time frame of the project. Caminos agreed that the 890 kilometers had to be selected and constructed in accordance with the GOC's rural development strategies. As part of

the Pico y Pala effort to maximize the impact of labor intensive feeder roads upon agricultural development, Caminos agreed that the proposed project would finance only those roads which meet the following selection criteria.

(i) Project Selection Criteria

To provide Pico y Pala with a first level method of analysis, enabling it to quickly reject those project applications which are of a very low priority, project selection criteria were developed.

Sound selection criteria should lead to selection of sub-projects that would be expected to achieve the agricultural production objectives of this Project. Necessary conditions for achievement of objectives should be present in sufficient form and substance to complement the road building activities. In this project, the benefits from the road construction, the necessary conditions for the benefits to be realized and examples of indicators that could be used for description and evaluation of the necessary conditions are presented below. The criteria and the necessary conditions are key factors; indicators are included to provide a guide for assessing whether the criteria are being met. Pico y Pala is expected to develop an informal weighing system which will be applied to the indicators:

Benefits from Road Construction	Necessary Conditions	Criteria	Indicators
I. Incremental Marketable Agricultural Production Leading to Increased Net Income to Small Farmer	A. Demand	A. Effective demand exists for agricultural products that are or can be produced in the area.	A.1. Demand for agricultural products that are par of GOC Nutrition Plan. A.2. Demand for other agricultural domestic product. A.3. Demand for export agricultur products.
	B. Storage, Processing and Sales Outlet Facilities	B. Sufficient public or private market facilities exist or are planned shortly.	B.1. Sufficient storage capacity exists. B.2. Sufficient processing capaci exists. B.3. Sufficient s outlots exist.

Benefits from Road Construction	Necessary Conditions	Criteria	Indicators
	C. Credit, Technical Inputs and Technical Assistance.	C. Public or private institutions exist or are planned to provide inputs to small farmers.	C.1. Credit available to small farmer. C.2. Technical inputs available. C.3. Technical assistance available.
	D. Small Farmers	D. Farmers in area of road influence have small land holdings.	D.1. 90 percent of farmers less than 2 has. D.2. 90 percent of farmers less than 5 has. D.3. 90 percent of farmers less than 10 has. D.4. 90 percent of farmers less than 20 has. D.5. 75 percent of farmers less than 20 has. D.6. 50 percent of farmers more than 20 has.
	E. Potential for increased Agricultural Production	E.1. Climate, water, soil and topography favorable.	E.1.a. Rainfall adequate. E.1.b. Dry or wet season not severe. E.1.c. Flooding in area of influence minimal. E.1.d. PH of soil adequate. E.1.e. Minimal rocky or sandy soil. E.1.f. Land slopes adequate for farming.
		E. 2. Idle land suitable for increased agricultural production	E.2.a. Cultivated land may be doubled. E.2.b. Cultivated land may be increased by 50%. E.2.c. Cultivated land may be increased by 20%. E.2.d. Cultivated land may be increased by 10%. E.2.e. Cultivated land may not be increased.

Benefits from Road Construction	Necessary Conditions	Criteria	Indicators
	F. Transport Services	F. Trucking and bus service readily available.	F.1. Existing service readily expandable. F.2. Existing service expandable with additional capital. F.3. No existing service.
	G. Construction Labor	G. Excess agriculture labor available	G.1. Excess labor available all year without interfering with agricultural planting or harvesting. G.2. Excess labor available 1/2 year. G.3. Excess labor availble 1/4 year. G.4. No excess agricultural labor available.
	H. Community Participation	H. Community desires to construct and maintain Pico y Pala road	H.1. Community Action Group exists. H.2. Community requests roads. H.3. Community participates in route selection and design. H.4. Community provides volunteer labor for construction. H.5. Community agrees to maintain road.
	I. Route Location	I. Road is located to promote adequate marketing of agricultural production with the least cost.	I.1. Road links isolated communities to existing markets with access. I.2. Small farmers in area of influence are maximized. I.3. Costly cuts, fills and bridge structures are minimized. I.4. Landslide areas are avoided if possible. I.5. Erosion prone areas are avoided if possible. I.6. Areas with drainage problems avoided if possible.

Benefits from Road Construction	Necessary Conditions	Criteria	Indicators
	K. Maintenance	K. Road is maintained adequately by Department, or community to insure continuous service.	K.1. Department agreement to maintain road. K.2. Department financing available to maintain Pico y Pala roads. K.3. Department organization, personnel and equipment to maintain pica y pala roads. K.4. Community agreement to contribute to maintenance. K.5. Community personnel and equipment to maintain roads.
II. Enrichment in the Quality of Life in Rural Areas and other Socio-Economic Benefits	A. Health Services	A. Coordination with AID assisted GOC Health Sector Program in Rural Areas	A.1. Health Post in or near area of influence. A.2. Para-Medical Pernnel in or near area. A.3. Ambulances available. A.4. Hospital facilities near. A.5. Rural Sanitation Program (INPES). A.6. Malaria Program (if applicable). A.7. Maternal Child Health Care Facilities.
	B. Education Services	B. Coordination with AID Assisted GOC Education Sector Program in Rural Area	B.1. Primary school teachers and teachor training. B.2. Primary school books. B.3. Primary school classromm availability. B.4. School lunch program.

Benefits from Road Construction	Necessary Conditions	Criteria	Indicators
	C.Electricity	C. Coordination with Rural Electrification Program	C. Electric power availability and plans for provision of electric power to the area.
	D. Housing	D. Building supplies available	D.1 Cement supplies D.2 Roofing supplies D.3 Brick supplies. D.4 Lumber supplies
	E. Cultural Activities	E. Cultural Programs are available	E.1 ACPO programs available. E.2 Sports programs E.3 Religious institutions.

(ii) Procedures

The above listed selection criteria will be applied to each project application and will be used as a first level analysis of all Pico y Pala roads financed under this project. In requesting AID financing, Caminos will provide AID with a copy of their analysis indicating how the road addresses the criteria.

As section II.5.b. indicates the Sub-project Selection and Evaluation Office of Caminos Vecinales will have three teams - composed of an engineer, economist and agronomist to carry out project analysis. These teams will assist the regional chief in preparing a prefeasibility study of the proposed road before the National Coordinator and USAID give final approval to the project for AID financing. (Caminos will use the criteria for projects exclusively receiving their own funds, but AID will not review such projects). Once a project application is found to meet the initial project selection criteria, it will be subjected to a more rigorous, second level of analysis as part of the feasibility study procedure. The feasibility study will examine all the criteria and will calculate an internal rate of return on each proposed feeder road. In order for the road to be eligible for AID financing, the internal rate of return must exceed the opportunity cost of capital - currently estimated at 15%.

This procedure is more rigorous than originally presented in the Capital Assistance Paper presented June 12, 1975 where so called "on going" Pico y Pala roads would not be subjected to a second level of analysis. In the presently proposed procedure all proposed road construction will be considered as new sub-projects and be subjected to the same criteria and analysis. The second level of analysis will consider the rate of return from the point of departure of an existing connecting road. In such a manner, AID would not be considered to be financing "on going" projects.

b. The Institutional Improvements

The Pico y Pala program is an on-going activity being implemented by the National Fund for Feeder road Construction (Caminos Vecinales), which also is involved in Government and IDB finanded feeder road construction programs (see discussion II.A.8). In line with the new GOC strategy of stimulating agricultural production, particularly among small farmers, the emphasis of Caminos Vecinales Pico y Pala program will be shifted away from creating temporaty, rural employment opportunities towards providing better access between existing markets and largely isolated farming communities that have a potential for increasing agricultural production. Although the target group in both instances will doubtlessly overlap, the project selection criteria and analysis will reflect the new emphasis on expanding production.

The Mission believes that the institutional changes to be accomplished by the loan will have a beneficial impact on the other feeder road activities that Caminos Vecinales is engaged in. As a result, it is anticipated that the GOC or other international donors will be interested in financing all future Pico y Pala programs once the effectiveness of the proposed institutional changes is demonstrated.

(i) Sub-Project Selection and Evaluation

The principal organization change to Caminos Vecinales within the proposed project is the creation of a Sub-Project Selection and Evaluation office for Pico y Pala road construction . Previously, the main emphasis of the program was to build feeder roads for employment generation purposes with little concern for the actual impact of the roads upon development. Little evaluation was done or even planned by Pico y Pala. When USAID began assembling supporting material for this project, there was almost no means to evaluate how the previous AID financed feeder roads had contributed to Colombian development.

The proposed project would provide technical assistance and training to support a new Sub-Project Selection and Evaluation office for Pico y Pala construction. The office would have two general functions: 1) to carry out the selection and economic analysis of the proposed roads, and 2) to develop an evaluation mechanism for on-going assessments of the impact of completed roads, especially in relation to agricultural production and provision of GOC social services.

The first function is designed to submit each project proposal to two levels of analysis. Initially, proposals must satisfy the project selection criteria (see Section II.B.5.a.)Then successful proposals will be submitted to an economic analysis that will test projects in terms of meeting an internal rate of return of 15% or better (see Section III.D.). It is expected that maintenance and environmental factors will recieve more attention in the preliminary

stages of project design through the participation of this office. In the course of this preliminary analysis, the office will be responsible for assessing the availability of agricultural and social services to support the proposed road. The second function includes the establishment of baseline data to permit a subsequent determination of development changes brought about with the help of the road. At the end of the project, this function should enable Pico y Pala to present a better statistical case for financial support from the GOC or other external lenders.

The office would have a permanent staff of three selection/evaluation teams consisting of three economists (one is already on board), three agronomists and three engineers well trained in both maintenance and environmental concerns.

(ii) Road Design and Construction Capability

Caminos Vecinales in its Pico y Pala program will improve its design and construction methods to help optimize the construction of access roads along with proper selection and evaluation. It is expected that Caminos Vecinales will have the capability to perform well such activities as low cost and simple soil studies, surface and sub-surface water control, erosion control, landslide area detection, and route localization assisted by aerial photo methods.

(iii) Consideration of Environmental Effects

The problems of erosion, landslides, sedementation and flooding are destroying a considerable amount of Colombia's agriculture potential. See Part III.A and Annex 4 for further discussion of Environmental Effects. Access road construction contributes a portion of such adverse effects. Caminos Vecinales will be instilled an awareness of adverse environments effects of Pico y Pala road construction and will be provided with expedient methods to deal with such effects.

(iv) Budgetary and Cost Accounting

Caminos Vecinales will have an improved system to account for expeditures and costs to improve its planning and executing capability. Improvements are also expected in the cash flow process from National sources to Caminos Vacinales and to field payment offices.

c. Maintenance

The maintenance of Pico y Pala roads must be viewed from two aspects: before completion and final acceptance, and after acceptance. Before completion is the stage when most large repairs are frequently needed. The initial construction work tends to disturb the land equilibrium. Some slides will occur until a new equilibrium is established. During this period of construction and before final acceptance of the road by the Department, Pico y Pala retains responsibility for the maintenance of the road. Final acceptance is accomplished after the road has been utilized for some time and initial landslides, road failure, settlements, and washouts have been cared for. Pico y

Pala, utilizing Caminos' equipment where necessary, has an excellent record on this maintenance.

With improved capability in design and construction methods and with capacity to consider and address environmental factors, Caminos Vecinales will lessen the need for large repairs during construction and even after acceptance. After the receipt and acceptance of the road, responsibility for repair and maintenance fell upon the department. In most cases, departmental highway offices did not have adequate budgets, personnel or equipment to maintain all roads under their responsibility. The available funds for maintenance (40% of annual funds) are considered considerable for an LDC. However, costs are high due to Colombia's mountainous terrain, overloaded trucks, inadequate drainage, exposed cuts and fills which are continually subject to erosion and sliding, and poorly prepared road beds with excessive curves and narrow shoulders. Most available maintenance funds went for primary or highly used secondary roads. Tertiary or feeder roads have the lowest priority. In some cases, small feeder road maintenance is done by the local municipios.

With the aim to resolve the problem and with National Government approval, Caminos Vecinales will assume the responsibility for "after acceptance" maintenance of all Caminos Vecinales constructed road, including Pico y Pala roads, ordinary and IBD constructed roads. Caminos Vecinales is preparing the mechanisms to effect such maintenance. It will sub-contract the maintenance to capable Departmental Highway Offices, National Highway Offices which have willingness and excess capacity to assume feeder secondary road maintenance, private contractors, or community groups. The GOC and AID are particularly interested in developing a sound mechanism that would allow community groups to participate in the maintenance of their own community roads. Acceptable maintenance mechanisms and means to allow community groups to participate will be determined by Caminos Vecinales.

6. Planned Inputs

a. Road Construction

Financial inputs will be provided for Pico y Pala road construction as follows:

	CY 1976		CY 1977		CY 1978		TOTAL	
G.O.C.	51	(1.5)	72	(2.0)	95	(2.5)	221	(6.0)
A.I.D.	6.0	(0.175)	97.5	(2.7)	69.5	(1.825)	173.0	(4.7)
TOTAL	57.0	(1.675)	169.5	(4.7)	164.5	(4.325)	391	(10.7)

Note: Figures in parentheses represent equivalent dollar amounts based on the following exchange rates: 1976 - 34:1. 1977 - 36:1, 1987 - 38:1

b. Institutional Improvements

(i) Sub-Project Selection

Trasportation economists are needed with experience in the analysis for selection of feeder roads. They will help to prepare an overall selection methodology and refine the project selection criteria. They will return at intervals to review and revise the methodology. The following is an estimate of needs and costs:

			Cost
1	Foreign Consultant	Time: 2 mos. at start	US$8,000
		2 wks. at 9 mos.	2,000
		2 wks. at 21 mos.	2,000
		1 mo. at 33 mos.	4,000
			US$16,000
1	Local Consultant	Time: 2 mos. at start	3,000
		2 wks. at 5 mos.	750
		2 wks. at 9 mos.	750
		2 wks. at 15 mos.	750
		2 wks. at 21 mos.	750
		2 wks. at 27 mos.	750
		1 mo. at 33 mos.	1,500
			US$ 8,250
		TOTAL	US$24,250
		or	US$25,000

Possibly, if at the end of one year it was determined that there were no need to review and revise the system much of the consultants work could be eliminated.

(ii) Sub-Project Evaluation

Assistance is to be provided in establishing and implementing an ongoing system for evaluating the impact of Pico y Pala roads. Collection of Baseline Data will be made in areas where roads are planned and in several areas where roads are not to be provided so as to provide reference cases. The data will describe the agricultural development stage of the areas of influence, approximate fallow and potential agricultural land, number of affected inhabitants, levels and sources of income, marketing practice, cropping patterns, educational and health levels, and community centers. The baseline and analytic data will be considerably more detailed than is required in the normal project selection process, in that the evaluation study would not just be an estimate of benefits but would, in fact, prove what benefits had been achieved in an area where roads had been constructed and where other inputs were to be provided. A carefully designed and executed impact study will bring to light interesting phenomena that could be of value to all future agricultural programs.

A breakdown of activities and estimated costs are as follows:

Activity	Personnel	Time	Cost US$
1. Prepare evaluation methodology, number of samples, required data, formats, personnel needs.	1 Foreign Consult.	2 mos.	8,000
	1 Local Consultant	2 mos.	4,000
			$ 12,000
2. Collect baseline data on 10 roads per year, 3 years (assumed)	2 Local Surveyors	70 M/mos.	14,000
	1 Local Supervisor	36 M/mos.	15,000
			$ 29,000
3. Processing and tabulations	- -	-	8,000
4. Collect impact data	Same as collection of Baseline Data		29,000
5. Processing and Tabulation	- -	-	8,000
6. Analysis and Recommendations	- -	-	14,000
			US$ 100,000

(iii) Design and Construction Capacity

(a) Expert Assistance

Two engineer/economists will be financed to assist the evaluation office in two specific areas: an evaluation of the labor/capital ratios being used and an evaluation of the current road design practices with recommendations for addressing the design, environmental and maintenance problems. The estimated cost is two mm for each expert annually for two years at $3,500 per month or $28,000.

(b) In-Country Training Seminars

With the help of outside experts, in-country training seminars and sessions will be included in the project. Their purpose will be to introduce the new project selection criteria and to stress the design, environmental and maintenance considerations to the regional personnel who supervise road construction.

Caminos will pay support costs and AID will finance up to $30,000 for short-term technical assistance (8 mm). The training seminars are expected to last three days in the 24 Departmental offices or Regional offices.

(c) Observational Training Interchange

Several other Latin American countries are experimenting with rural roads programs. Examples include Honduras, Mexico, Nicaragua, Bolivia and Jamaica. The proposed project would attempt to develop an interchange between Colombia and these countries. Pico y Pala staff from other countries will be invited to Colombia to visit the national and regional offices of the Colombian Pico y Pala Program, as well as actual construction sites (proposed, underway and completed), to facilitate the transfer of technologies and administrative methodologies among the various country programs. In addition, Colombian personnel would be able to visit other countries to evaluate their experiences. The estimated cost of this portion is $30,000 , to include travel, per diem and related expenditures.

(iv) Consideration of Environmental Factors

On the basis of Professor Liggett's discussion of the potential environmental problems, the proposed project would finance a full environmental assessment. The assessment would go beyond simple identification of impact but would address such topics as recommended actions for mitigation of adverse effects, and identification of alternatives that would result in the best quality development.

Based on the previous assessment, it is expected that specific problems will be encountered requiring: research into environmental problems which are unique to, or particularly severe in Colombia; and, training in the environmental problems associated with road construction. The research and training, would probably be carried out in conjunction with a U.S. university familiar with feeder road construction. The secondary objective of this research and training is to help create institutional links between the U.S. and Colombian universities with an interest in this area, e.g., Universidad de los Andes, Universidad Nacional in Bogotá, and in the Universidad del Valle in Cali. Up to $60,000 will be made available for these purposes. The specific personnel and technical requirements will be determined by Caminos Vecinales.

(v) Cash Flow, Budgetary, and Cost Accounting Study

As will be noted later in Part IV. B.2., GOC budgetary cash flows to Caminos Vecinales are not regular and in some cases have proven to be non-existant in the first two months of the CY year (GOC fiscal year). The proposed project includes a study of the progress of National funds to Caminos Vecinales and to the field offices, and recommendations to improve the cash flow process.

Also, in the preparation of this project, USAID has discovered that Caminos Vecinales has an unusual and unclear budgetary accounting process. For example, it was impossible to relate cost data to road completion data due to Pico y Pala's weighted system of accounting. Costs per kilometer of road completed tended to vary greatly. While some of this is explained (See Table I, Part III.A). USAID and Caminos Vecinales believe a better system can be developed. The proposed project includes up to $12,000 for six local man months of TA in the various aspects of this study.

(vi) Evaluation of Maintenance Capacity

Local studies are to be financed by this loan to investigate the capacity and arrangements for maintenance to be contracted possibly with Department Highway Offices National Highway Offices, private contractors, or community groups. The studies will be formulated with the aim to attract community participation in the maintenance service as much as possible. A consultant will study the financial, equipment, personnel and organizational factors, determine problems and constraints, and formulate recommendations. Caminos Vecinales will contract for the study, agree to consider such recommendations, and present an acceptable maintenance plan to AID. Loan funds in the amount of US$15,000 will be reserved for studies of this purpose.

(vii) Summary of Project Funding for Institutional Aspects

(US$ 000)

	TA	Training	Total
1. Sub-Project Selection	25	--	25
2. Sub-Project Evaluation	100	--	100
3. Design & Construction Capacity	28	60	88
a. Expert Assistance	(28)		
b. In-country Training Seminars		(30)	-
c. Observation training interchange		(30)	-
4. Consideration of Environmental Factors	30	30	60
5. Budgetary and Cost Accounting	12	--	12
6. Evaluation of Maintenance Capacity	15	--	--
	210	90	300

c. Maintenance Funding

The GOC will provide national funds to Caminos Vecinales for maintenance of Caminos Vecinales constructed roads including Pico y Pala roads. It has been estimated that a total of US$ 1.0 million for maintenance will be required until the end of the project for presently constructed and those Pico y Pala roads to be constructed under the project. The required input is based on an assumed annual maintenance cost of US$ 1000 per kilometer or approximately 10% of investment cost per kilometer per annum. This figure is a generally accepted standard for similar type roads and has been determined to be realistic in the Colombian context. Indeed, the figure is somewhat conservative since it is anticipated that the communities will carry out some of the regular maintenance functions. These maintenance funds are expected to cover only maintenance costs associated with AID-financed roads, including those roads constructed under previous sector loan assistance. The schedule of maintenance disbursement is anticipated as follows:

TABLE 3

Projected GOC Maintenance Disbursements
(thousands of dollars)

	1976	1977	1978	Total
Previous AID-Financed Pico y Pala roads	233	233	234	700
Access Road Loan	-	100	200	300
	233	333	434	1,000

The GOC will be required to demonstrate on a yearly basis that the above funds will be available in its National Budget for maintenance of Pico y Pala roads.

d. Summary of Project Inputs
(US$000)

	AID	GOC
Road Construction	4,700	6,000
Institutional Improvement	300	---
Sub-Project Selection	(25)	---
Sub-Project Evaluation	(100)	---
Design and Construction Capacity	(88)	---
Expert Assistance	((28))	---
In-Country Training	((30))	---
Seminars	((30))	---
Observation Training	(60)	---
Interchange	(12)	
Consideration of Environmental Factors	(15)	
Budgetary and Cost Accounting		
Evaluation of Maintenance Capacity		
Maintenance Funding		
TOTAL	5,000	1,000
		7,000

PART III - PROJECT ANALYSIS

A. TECHNICAL ANALYSIS INCLUDING ENVIRONMENTAL ASSESSMENT

1. Technical Description of the Project

The Project consists of the construction of low cost farm-to-market feeder roads under a labor intensive Pico y Pala (Pick and Shovel) method of construction, to provide vehicular access from small isolated rural farm communities to the market economy.

The road systems of Colombia, under the jurisdiction of the Ministry of Public Works and the Fondo Nacional de Caminos Vecinales (CV), fall into three major categories: special, primary, and secondary. CV established standard design specification and construction criteria for secondary and feeder roads. The engineering portion of this project encompasses the selection, planning, field survey, design and construction of Pico y Pala feeder roads. In general, these roads will follow the established CV design criteria for second order road construction.

After Pico y Pala feeder road, selection is made by the Coordinating Office, the CV regional office in that area has the responsibility for surveys, design, cost estimates, labor contracts and supervision of construction. Drainage structures and bridges are included in the design, as required, but kept to minimal needs, insofar as drainage and runoff calculations permit. All Pico y Pala feeder road design and construction documents must have the approval of the Director of CV, prior to construction. CV capability in this regard appears to be good. Construction is actually carried out by contractors who hire rural workers. The regional CV office supervises the contractors.

2. Preliminary Technical Considerations

The basic staff of a typical Caminos regional office is composed of a chief engineer, who supervises: (a) an administrative team of two warehousemen, one treasurer, and two bookkeepers; (b) a shop with equipment; and (c) the chief of the technical group. The chief of the technical group supervises the three program groups (Ordinary, IDB, and Pico y Pala) each of which contains civil engineers, inspectors, and topographers. A controller-auditor section reports directly to the chief engineer.

There are CV regional offices in each of the 22 departments and 2 national territories. Each regional office has about 65 people working on all three CV programs. Each regional office is equipped with a pool of basic vehicular road construction equipment. A typical equipment pool consists of: 4 jeeps, 3 dump trucks, 10 bulldozers (D-4, D-8), and 1 towed vibrating compactor.

The proposed method of operation for these offices under Pico y Pala is as follows:

The regional CV staffs report possible technical problems when submitting their projects for approval by the CV central office. These technical considerations should involve, but are not limited to:

- Coordinating route selection and receiving community approval of a selected route.

- Securing agreement on access and right of way (R. O. W.) where routing involves private property.

- Noting unfavorable soil conditions, including areas subject to landslides, and proposing remedial methods.

- Identifying surface and ground water problems in erosion of disturbed and loose soils.

- Locating spoil areas to receive excess excavation.

- Recommending methods of stabilizing the road banks in critical areas, e.g. better drainage control, terracing, planting, etc.

Before new projects are approved, the regional CV staffs should also make known the condition of existing feeder roads constructed in their areas with respect to the condition of the roads, maintenance, usage, adequacy, deficiencies of design and construction errors to be avoided in future planning.

3. Implementation Plan

After meeting all the selection criteria and receiving approval to proceed, the regional office should proceed to the step procedures outlined below:

- Make detailed topographic route survey of route selected and approved.

- Contract for the preparation of the design, cost estimates, proposed progress schedule and other required documents. Design the drainage structures and incorporate in the plans. Submit all plans, specifications and other required documents to CV headquarters for approval.

- Insofar as possible, schedule the work for the dry season, or during the slack agriculture production season, in order to maximize the use of manual labor.

- Negotiate with a contractor who will subcontract manual labor.

- Keep accurate time and payroll records on all contracts, and their effective beginning and termination dates.

- Provide adequate on-site supervision of construction at all times.

- Schedule the use of vehicles and/or purchase and delivery of construction materials and equipment in a timely fashion, as required, so that the equipment and material can be at the job site when needed.

- Prepare construction progress reports, maintain project files, and submit a final completion report in accordance with the reporting procedures defined in the Loan Agreement.

- Insure that future arrangements for road maintenance are satisfactory.

4. Design Standards

The Pico y Pala feeder roads will be constructed through the use of labor intensive, pick and shovel construction methods using an absolute minimum of mechanical equipment. It is anticipated that these roads, for the most part, will be constructed in mountainous terrain. These roads are to be constructed to serve vehicular type traffic year round.

The design standards for Pico y Pala feeder roads will, in general, follow the Caminos Vecinales standard specifications for design and location studies for second order roads. Final design is based upon conditions found in the field and modifications to these standards are permitted when justified by terrain problems.

All materials used in construction and the methods of construction will meet the standards as specified by CV and the Ministry of Public Works (MOP).

Geometric Standards

Average Mountainous Road

- Design speed (kilometers per hours)	30
- Minimum platform (roadbed) width-meters	4.30
- Minimum pavement (lane) width-meters	3.50
- Minimum horizontal radius (meters)	30
- Maximum gradient (%)	7
- Maximum superelevation (%)	6
- Sight distance - passing (meters)	200
- Typical surface of road	As approved
- Drainage	Permanent & Temporary
- Design load for bridges	HS-15
- Width of R.O.W. (meters)	0

As a general rule, all Pico y Pala feeder roads will consist of one lane with turnouts or widened areas for passing placed approximately every 200 meters and at sharp curves as conditions and design dictate. The wearing course will be select borrow material. Cuts for excavation will be limited to a maximum of 8 (vertical) meters. Fill will be compacted by approved methods and limited to a maximum vertical depth of one meter.

Drainage will be provided by means of side ditches, together with reinforced concrete pipe culverts, drop inlets, box culverts and bridges as required to provide adequate drainage and cross-drainage facilities. Bridges will be one lane roadway width and designed for HS-15 loading.

5. Equipment

There is little call for equipment in the construction of Pico y Pala type feeder roads, especially for those roads in mountainous areas which will make up the bulk of road construction under this program.

When equipment is needed, it will represent a fractional part of the total construction cost. Vehicular and construction equipment is used and can be expected to be utilized under certain soils or terrain conditions. For example, if cuts occur in clay or silty soils, better material will have to be brought in, possibly, as an admixture, with selected borrow material used for the wearing course. In cases like this, 6 to 8 metric ton dump trucks will be used to haul the better material to the site; scarifying and blading will be done by the use of grader, and compaction can be accomplished by towed, vibrating, compaction equipment available in the CV regional offices. Most of this equipment is rented by CV to Pico y Pala for specific needs. No procurement of equipment is planned under this program; equipment that may be necessary is already available and deemed adequate for the project.

6. Appraisal of Technical Soundness

a. Labor

The pre-selection study will establish that there is ample unskilled labor available in all of the areas where projects are contemplated. The construction of these roads will use pick and shovel methods almost exclusively, with material being transported short distances by wheelbarrow. This type of labor intensive feeder road construction program has proved to be successful in recruiting labor since its inception and has been very instrumental in alleviating unemployment for the farmers during the dry season or when the farms are not being worked. With few exceptions, no skilled labor such as equipment operators are required.

b. Equipment

So little equipment is needed that it does not present any anticipated construction problems. The few pieces of construction equipment that may be required are available in the various regions where the feeder roads will be programmed and constructed.

c. Design

Standards for design and construction of roads have been established by the CV for the various order of feeder roads under its jurisdiction. The Pico y Pala feeder road standards generally follow those for roads of second order with modifications permitted to meet exceptional terrain or field conditions. Adequate technical input for this

Typical Cross Sections
Pico y Pala Feeder Road

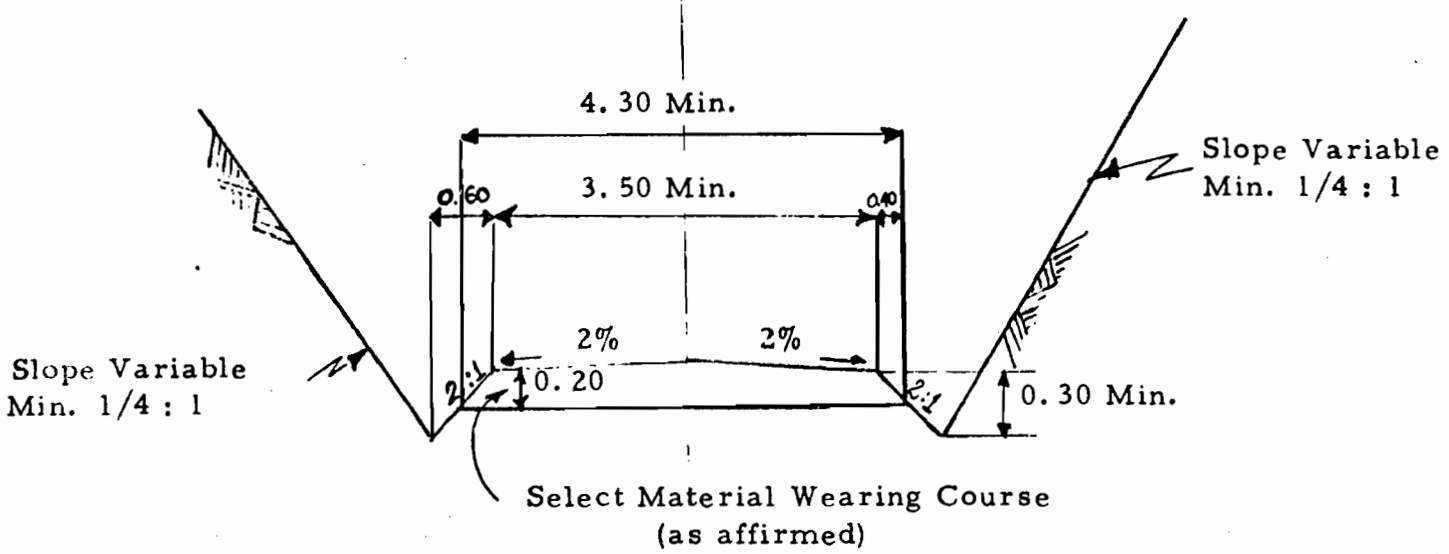

Full Cut Section
(No Scale)

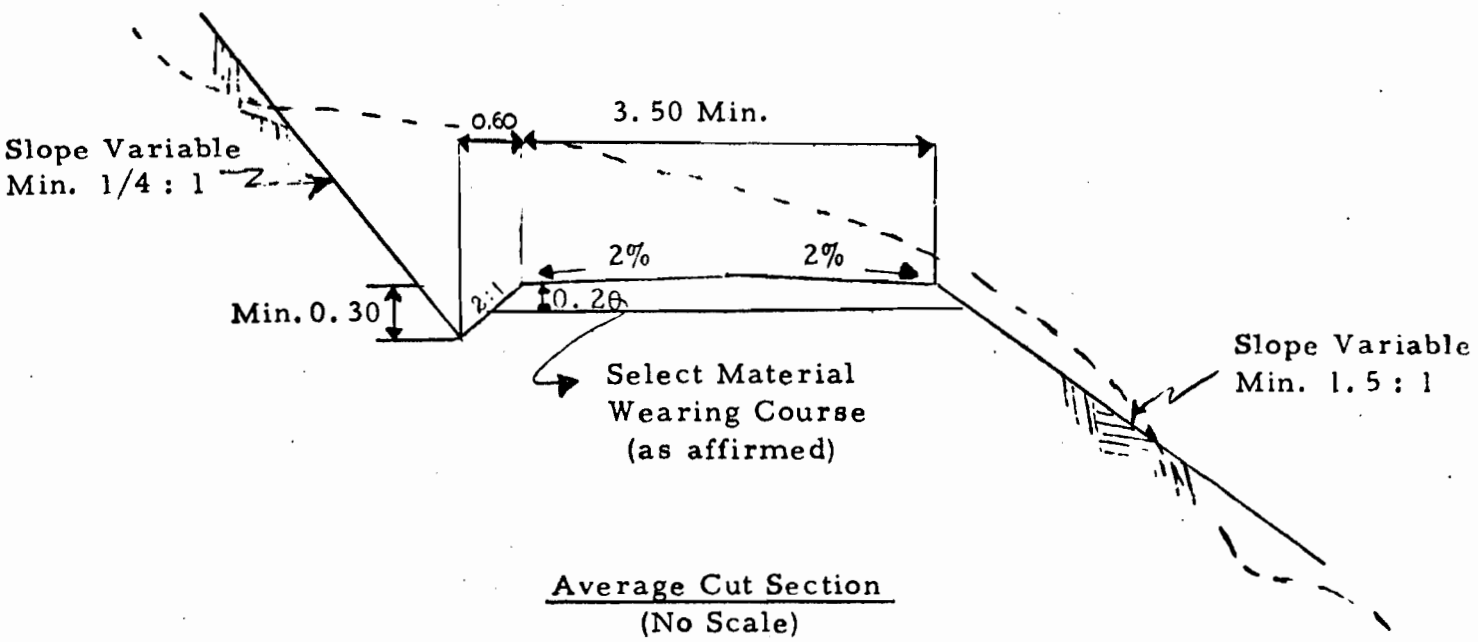

Average Cut Section
(No Scale)

type of road design and construction is available in the CV regions. The regional staffs are equipped to accomplish the surveys, design the drainage structures and small bridges, provide the specifications, negotiate labor contracts, supervise construction and accomplish all other basic engineering requirements. Contracts are negotiated with local A & E firms for the design and preparation of plans, profiles, sections, quantities, and other related contract documents. All engineering contractors are prequalified and selections are made by approved methods. When design problems such as large bridges are beyond the scope of regional staff capabilities, the central CV office is called upon for assistance.

d. Materials

Other than the natural earth found in its many forms during the progress of Pico y Pala road construction in mountainous areas, there is little call for other construction materials. Drainage requirements such as reinforced concrete pipe, concrete headwalls and culverts, concrete and steel for relatively few bridges make up the majority of outside materials needed. It is anticipated that the cost of these materials will be minimal compared to the total cost of construction.

e. Bridges

For the most part, box culverts will carry the major runoffs from small streams. Bridge construction is expected to be infrequent, with no bridges anticipated to be more than 5 meters in length. These small single lane spans of reinforced concrete construction should present no problem to the regional Caminos Vecinales staff in design and construction. Should larger structures be needed beyond the design and construction capabilities of the regional staff, central office assistance can be called upon. However, no large bridge construction is anticipated and will, in fact, be discouraged, with recommendations to reroute, relocate, or reject the road.

7. Land Expropriation and Compensation for Access

a. Authority

Expropriation is authorized by Article 30 of the National Constitution. Whenever the application of a law results in a conflict of the rights of individuals with the needs recognized by law, private interest must defer to the public or social interest. For reasons of public benefit or social interest as defined by law, expropriation can be carried out by judicial order and previous compensation.

b. Formal Procedures

A suit for expropriation must be instituted before a Civil Circuit Court and filed against the owner of the property. If expropriation is decreed, then the Court shall proceed to appoint two experts to make an appraisal of the value of the land and its improvements. After payment is made, the judge shall give the agency the possession of the land. This possession can be granted to the agency even before the appraisal of the land, subject to previous deposit of the cadastral land value plus 50% of such value by the agency.

c. Actual Caminos Experience

The above formal judicial procedure for expropriation has never been used by Caminos Vecinales during its short existence, since communities have not seen fit to contest Caminos' existing procedures. The programs of Caminos Vecinales have generally been welcomed by the landowners due to the nature and desirability of roads constructed by this agency. Indeed, some landowners have given land to Caminos for roads without compensation.

The following is the procedure practiced by Caminos Vecinales to acquire land and compensate for damages caused by the agency's road construction:

Two land appraisers are appointed: one by the landowners and one by Caminos Vecinales. In case of disagreement between the two appraisers, a third one is appointed by the corresponding municipality where the land is located. This decision is final. The appraisal document for the price of the land is included in the draft of a Resolución Ejecutiva to declare the land of public benefit or social benefit to be signed by the President of the Republic and the Ministry of Public Works. Based upon the above resolution, immediate payment to landowners is made, charging the funds allocated to the corresponding road.

d. Compensation for Damages

A similar procedure is implemented when a Caminos Vecinales road damages private property. When damage is done to crop production rather than land, the value of the damaged crops is evaluated according to the Ministry of Public Works Code. This amount is paid to the owner.

8. Overall Cost Estimates

Under the Pico y Pala program from June 1972 to December 1974, 78 feeder roads in 16 departments were constructed. Considering only fully completed roads, a total of 190 kilometers was completed at a total cost of 65.9 million pesos. The average cost per km. of these 78 feeder roads, ranging in length from 3.5 to 20 kms. was about 350,000 pesos or about $11,400 per km.

The average costs under varying terrain conditions are in accordance with the following estimates:

Rocky terrain	- 500,000 pesos/km.
Normal soiled conditions (loose material)	- 350,000 pesos/km.
Side slopes fairly flat (normal conditions)	- 180,000 pesos/km.
Flat terrain - some fill	- 150,000 pesos/km.
Flat terrain - firm base	- 120,000 pesos/km.

Annex II 6 provides the wide range of costs experienced so far by Pico y Pala. Average projected kilometer costs under the proposed project have been projected by year through 1978. Escalation costs have been estimated by conditions and projections assumed for each department.

Table 1

Pico y Pala Road Cost Projections

Year	Average Cost Km/Yr. (Pesos)	Exchange Rate	Cost ($)
1975	366,000	32.1	11,500
1976	395,000	34.1	11,700
1977	430,000	36.1	11,900
1978	480,000	38.1	12,100

Based on historical experience and these projections, the costs for this project appear to be reasonable.

9. Labor and Material Costs

Chart "A" was prepared by the Oficina del Coordinador Nacional de Pico y Pala and lists unit costs for different materials as established by the FNCV for the several regional offices listed. Picks, shovels, and other required hand tools are supplied to the contractor by the FNCV and charged to his account at nominal costs. Contracts for labor are based upon excavating a fixing amount of material in cubic meters at a predetermined unit cost per cubic meter, which is dependent upon the type of material to be excavated. A hard working individual can make up to 80 pesos a day, but the average income runs around 40 pesos/day. Both labor and material costs appear reasonable.

10. Environmental Aspects

A full discussion of the environmental impact of the proposed project is contained in Annex 4 in a report, "Land Damage Caused by Road Construction in the Mountainous Areas of Colombia," by Professor James Liggett of Michigan State University. This proposed project will have significant environmental impact. On the positive side, favorable effects include access to health services, higher living standards, employment, increased agricultural production, increased educational services, and improved nutritional status. Most of these positive factors are discussed elsewhere in this PP.

The proposed project is expected to have a neutral, or negligible, impact on several environmental factors. The areas where the roads will be built are highly populated with small farmers, resulting in a relatively stable ecological balance at present. The existing wildlife and natural resource balance should not be greatly upset by the intrusion of feeder roads. Although agricultural land use patterns should change as a result of the roads, the change is expected to be gradual, so as to not drastically affect ecological balances.

The proposed project is not expected to include any roads to areas where primitive cultures exist and where access could cause cultural shock to the inhabitants. No major dislocations of population will result from the narrow right of way for the roads, as this factor is taken under consideration in the original road design study. Finally, low traffic volumes are not expected to have any serious effects upon noise levels or air quality.

Ch[illegible] A

Pico y Pala Program
Unit Prices (Pesos)

Regional Offices	Clearing and Grubbing	Topsoil	Soil	Conglomerate	Clay	Rock	Landslide	Fill	Ditche
	M2	M2	M3	M3	M3	M3	M3	M3	M. L.
Antioquia	2.50/rastrojo	2.00	8.00	13.00	6.85	20.00	10.00	-	-
	6.00/mountain	-	-	-	-	-	-	-	-
Atlantico	-	-	17.00	27.00	22.00	40.00	10.00	17.00	-
Boyaca	-	-	5.90	9.20	-	26.87	4.00	-	-
Caldas	1.50	0.80	7.00	9.50	5.80	21.00	3.60	-	-
Cauca	4.00	4.00	6.00	10.00	8.00	20.00	6.00	-	-
	-	-	7.00 1/	9.50 2/	9.50 1/	-	-	-	-
	-	-	-	8.00 3/	-	21.50 2/	-	-	-
Cundinamarca	-	-	5.50	7.50	-	18.00	3.00	-	-
Choco	3.00	3.00	8.00	12.00	10.00	28.00	6.00	-	3.00
Guajira	0.10	-	18.00	25.00	-	40.00	-	18.00	-
Huila	0.40	0.50	6.00	9.00	-	22.00	4.50	-	-
Meta	-	-	10.00	15.00	-	30.00	-	-	-
Nariño	1.60	0.70	8.00	11.00	7.70	24.00	4.30	-	-
Norte Santander	1.50	0.70	5.85	9.20	6.50	20.15	4.00	10.00	1.40
Quindio	1.50	0.80	7.00	9.50	5.80	21.00	3.60	-	-
Risaralda	1.00	1.00	6.00	9.00	-	21.00	6.00	-	-
Santander	1.50	-	6.00	9.50	-	21.00	3.40	-	-
Tolima	1.60	0.75	8.50	14.00	-	22.00	6.00	-	-
Valle	-	-	7.89	13.89	10.29	23.97	4.89	-	-
Intend. Casanare	0.50	-	10.00	11.70	14.00	23.30	9.00	-	1.50

1/ Prices in effect in: Silvia-Puente Real-La Campana, e Inza-Turmina
2/ Prices in effect in: Inza-Turmina
3/ Prices in effect in: Florencia-Esmeraldas, y San Juan-Granadillos

M2 - Square Meter
M3 - Cubic Meter
M. L. - Lineal Meter

Prepared: 4/24/75

There are possible adverse environmental effects of the proposed loan, including erosion, landslides, farmland loss and damage, and water resources damage. Most landslides are likely to occur during or shortly after construction, when Caminos can correct the damage. However, there is always the threat of subsequent slides which would be unattended. Erosion is usually caused by the redistribution of surface waters from the road construction; sedimentation in the rivers leads to a number of problems which include flooding, frequent changes in the course of the river and subsequent damage to permanent structures and agricultural land, contamination of personal and public water supplies, high rates of reservoir sedimentation, and a greatly increasing difficulty in the development of water resources for small or large uses.

Each of these potential dangers may or may not exist at a given road construction site. The best remedies for prevention of environmental damage in these areas is a knowledge of the problems on the part of the parties involved in the construction. This knowledge should be utilized in the route location process, including a review of stable and unstable zones, drainage pattern, soil types, topography, and vegetation. In order to minimize construction damage, the borrow and spoils areas should be selected with a view towards preventing erosion and sediment production.

The proposed project will address these environmental problems. The engineers who will be planning and building roads will be made increasingly aware of and concerned over the environmental impact through a technical assistance and training program. CV engineers will use this training during the pre-construction socio-economic evaluation of the road, and the road design. The possibility of slides and the consequent sediment production and erosion will be reviewed carefully.

B. FINANCIAL ANALYSIS AND PLAN

1. Recurrent Budget Analysis of Implementing Agency

a. Caminos Vecinales

Caminos Vecinales has three basic programs. Its Ordinary Resources program is financed by its own resources, which consist of 10 percent of the total GOC funds received from the national gasoline tax; a 2 centavo tax on every bottle of beer sold by the Departments; contributions from GOC Agencies such as ICEL, INCORA, and the Cafeteros; and various Departmental contributions. Gasoline tax revenues have accounted for about 35 percent of CV's total revenues. Second, its IDB road construction program is financed by GOC budgetary allocations: (58 percent) and an IDB loan (42 percent). A new IDB loan for CV to vuild secondary roads in two pilot DRI areas is under discussion.) Third, its Pico y Pala program is financed by Ministry of Agriculture, Ministry of Public Works, National Coffee Federation, AID and Caminos Vecinales resources.

Tables 1 and 2 provide past and projected cash flow figures for Caminos Vecinales. On the revenue side, CV is shifting its revenue base from departmental and voluntary contributions to tax-based sources in order to even out the flow. CV has had an increasing and steady income flow from the gasoline tax. It is expected to increase in the future, as the degree of GOC subsidy of the price of gasoline is likely to decline. The projection that GOC budget resources available to CV will increase from 240 million pesos in 1975 to 435 million pesos in 1978 is optimistic, but feasible. CV's second largest source of internal revenues is the beer tax, which is expected to increse from 36 million pesos in 1975 to 46 million pesos in 1978. As with the gasoline tax, these revenues have usually reached budgetary targets, making them more dependable than departmental and voluntary contributions. The Departments simply lack the interest and funds to support the program. The communities expect Pico y Pala to pay for the roads, especially in cases when the communities contribute free labor to finish the road sooner. It should be pointed out that CV's attempts to utilize the appraisal tax as a source of revenue have failed thus far. The Consejo Nacional de Valorización, the GOC agency responsible for collecting the tax, cannot bill anyone before the road is finished - delaying for two-three years any return to CV on its contruction costs. The tax collections are not significant - the small farmers affected by the roads have very limited incomes and the legal difficulties of collection are numerous. As a result, CV has begun to budget its funds without unrealistic expectations of immediate tax returns from this source.

On the expenditure side, several shifts in program direction are occurring. CV is placing less future emphasis on

its Ordinary Program and more emphasis on the Pico y Pala and DRI programs. This shift reflects a desire to play a greater role in the GOC strategy of concentrating resources on agricultural development. In addition, the shift to Pico y Pala and the halting of the capital intensive BID program reflect increased CV emphasis on labor-intensive construction rather than equipment-intensive construction. Another trend is the increased budget for road maintenance from 10.8 million pesos in 1971 to 50.0 million pesos in 1978. On a budget execution basis, there is also a significant increase as CV received 7.1 million pesos in 1971 and 18.9 million pesos in 1974. This maintenance represents the cost of protecting the roads until CV construction has been completed.

b. Pico y Pala Program

The increases in expenditures for the Pico y Pala program have been substantial and are projected to further increase in the future. In 1972, the first year of the program, Pico y Pala received 7 percent of the total CV expenditures budget. In 1973 this increased to 17 percent, and in 1974 it was 29 percent. By 1978 the Pico y Pala program will account for a projected 42 percent of the budget. These figures are further explained in Table 2.

CAMINOS TECINALES
Past and Projected Cash Flow
1971 - 1978
(COLONES)

Table 1

	1971		1972		1973		1974		1975		1976	1977	1978
	Budget	Execution	Budget	Execution	Budget	Execution	Budget	Execution	Budget	Execution	Budget	Budget	Budget
REVENUES													
I National Budget													
1. Ordinary Resources/ 10% Gas	115,306	99,791	115,850	125,246	166,014	187,344	158,694	140,984	243,070	-	[illegible]	[illegible]	435,600
2. Other GOC Contributions 1/	11,556-	16,457	55,181	24,719	30,521	2,215	47,615	23,811	31,210	-	-		-
3. BID Contract	57,000	26,011	109,203	102,232	87,208	59,162	85,795	37,191	-	-	-	-	-
4. AID Loans	-	-	21,000	8,671	47,068	16,139	34,120	43,800	13,300	-	32,000	54,000	19,000
SUB-TOTAL	144,871	144,259	301,334	261,868	330,811	264,860	326,224	245,786	287,580	-	[illegible]	450,000	454,600
Departmental Budgets													
1. Voluntary Contributions	105,563	37,237	103,738	32,790	62,599	18,540	53,957	8,022	39,300	-	5,000	-	-
SUB-TOTAL	105,563	37,237	103,738	32,790	62,599	18,540	53,957	8,022	39,300	-	5,000	-	-
III Own Resources													
1. Appraisal Tax	3,669	1,014	7,000	43	19,147	1,893	15,920	1,930	16,000	-	5,000	10,000	15,000
2. Investment Recoveries	1,579	2,177	8,5-0	2,382	9,454	3,982	1,296	2,628	804	-	-	-	-
3. Warehouse Sales	1,672	3,151	50	943	2,350	663	300	112	1,500	-	-	-	-
4. Neighbors-Municpalities-Communities Contributions	11,173	21,111	1,15-	3,895	6,850	1,553	-3,806	2,170	50	-	-	-	-
SUB-TOTAL	16,993	8,453	16,72-	6,268	37,801	8,091	21,322	6,840	18,354	-	5,000	10,000	15,000
IV Beer Tax	35,000	26,891	27,000	36,167	29,940	32,539	30,896	32,317	36,040	-	[illegible]	[illegible]	46,000
V Other Entities													
1. Pedecafe	22,811	5,799	44,263	11,302	47,920	12,688	39,309	11,982	9,000	-	11,000	20,000	30,000
2. INCORA	25,876	10,624	13,301	12,609	13,734	4,534	10,000	2,175	-	-	-	-	-
3. Other (Inravision, ICEL, ICA, EEPP Medellin, CAR, Texas, etc.) 2/	7-,331	26,969	292,35-	13,-90	105,306	22,157	51,567	5,640	36,296	-	-	-	-
SUB-TOTAL	123,718	43,352	350,-17	35,-01	166,960	39,379	100, 876	19,747	45,296	-	11,000	20,000	30,000
TOTAL REVENUES	-65,1-0	260,192	799,213	341,-92	628,111	363,409	533,274	312 ,712	426,570	-	472,000	524,000	545,600

Table 2

Past and Projected Cash Flow
(Continued)

	1971 Budget	1971 Execution	1972 Budget	1972 Execution	1973 Budget	1973 Execution	1974 Budget	1974 Execution	1975 Budget	1975 1/ Execution	1976 Budget	1977 Budget	1978 Budget
EXPENDITURES													
I Investments													
1. Ordinary Program	256,[illegible]	146,090	242,517	121,014	182,664	80,697	179,367	63,203	245,791	-	[illegible]	104,859	95,0[illegible]
2. BID Program	[illegible]	73,470	280,540	138,802	229,291	136,244	154,551	76,740	-	-	[illegible],700	-	-
3. Pico y Pala Program	-	-	60,79[illegible]	20,639	118,999	40,905	98,965	55,374	79,067	-	[illegible],000	146,000	147,00
4. DRI	-	-	-	-	-	-	-	-	-	-	[illegible]	90,000	100,00
SUB-TOTAL	[illegible]	219,560	683,[illegible]	[illegible],445	530,954	257,846	432,883	195,317	324,858	-	[illegible]	340,[illegible]	342,0[illegible]
II Roads Maintenance	10,[illegible]	7,079	5,405	3,299	66,010	5,029	30,007	18,943	27,310	-	[illegible],000	45,000	50,00
III Other Investments 3/	12,278	4,433	6,954	2,957	28,007	13,752	36,087	10,524	4,756	-			
IV Operating Expenses													
1. Payroll and Fees	36,[illegible]	30,105	34,573	29,062	43,416	28,030	48,127	41,107	61,126	-			
2. General Expenses	12,599	9,815	14,283	12,250	15,807	12,301	18,944	16,648	13,926	-			
3. Expendable Equipment	[illegible],693	3,407	4,966	3,767	4,809	3,186	5,621	4,165	5,475	-	[illegible]	115,141	126,57[illegible]
4. Overhead	[illegible]	8,954	10,594	5,477	8,941	4,357	6,052	3,828	5,402	-			
SUB-TOTAL	65,[illegible]	52,281	64,416	50,566	72,973	47,874	78,744	65,748	85,929				
V Debt Service	10,[illegible]	7,126	7,676	6,479	29,324	19,367	2,603	2,357	3,402	-			
VI Technical Assistance and Studies	7,[illegible]	5,642	5,023	2,792	22,392	1,642	9,094	3,968	12,059	-			
TOTAL OUTLAYS	[illegible]	296,121	773,325	396,548	749,660	345,516	589,418	296,887	458,314	-	[illegible]	500,991	519,600

FOOTNOTES

1/Other GOC contributions include (a) MOP and (b) additional special contributions from GOC 2/Others include contributions from entities such as ICEL, ICA, etc and resources coming f equipment rented and similar own transactions

3/ Other Ir stment includes (a) Purchase of Real State propert (b) works made by contract "Obras legadas", Contributions to Junta de Accion Comunal (d) Fondo Vivienda Empleados 4/ Data will be available by June 30, 1975.

2. Financial Plan/Budget Tables

a. Funding Requirements

The total costs of the proposed project are summarized in the following tables:

TABLE 3

SUMMARY COST ESTIMATE AND FINANCIAL PLAN
(US$ 000)
PROJECT PAPER

USE	SOURCE						TOTAL
	AID		HOST COUNTRY		OTHER		
	FX	LC	FX	LC	FX	LC	
Road Construction	--	4,700	--	6,000	--	--	10,700
Institutional Improvement	130	170	--	--	--	--	300
Maintenance	--	--	--	1,000	--	--	1,000
TOTAL	130	4,870	--	7,000	--	--	12,000

TABLE 4

COSTING OF PROJECT OUTPUTS/INPUTS
(In US$000 or equivalent)

PROJECT PAPER

X NEW
-REV.#

Project # 514-0220

Title: Small Farmer Market Access Loan

Project Inputs	Project Outputs			TOTAL
	Road Construction #1	Institutional Improvements #2	Maintenance #3	
AID APPROPRIATED ROAD FUNDS	4,700			4,700
Sub-Project Selection TA		25		25
Sub-Project Eval. TA		100		100
Design & Construction TA		28		28
In-Country Seminars		30		30
Observation Interchange		30		30
Environmental Considerat.		60		60
Cash Flow, Budgetary Study		12		12
Maintenance Study		15		15
Other U.S.	--	--	--	0
Host Country	6,000		1,000	7,000
Other Donors	--	--	--	0
TOTAL	10,700	300	1,000	12,000

TABLE 5. Project Summary by Source of Financing and Disbursement Period
(US$ 000)

	1976	1977	1978	Total	%
1. Local Costs					
a. Road Construction					
GOC Funds	1,500	2,000	2,500	6,000	56
AID Loan Funds	175	2,700	1,825	4,700	44
Sub-total	1,675	4,700	4,325	10,700	
b. Institutional Improvements					
AID Loan Funds	60.5	54.25	55.25	170	100
c. Maintenance					
GOC Funds	233	333	434	1,000	100
2. Dollar Costs					
Institutional Improvements					
AID Loan Funds	47	49	34	130	100
Total Project Summary					
AID Loan Funds					
Local Costs (Construction, & Institutional improvement	235.5	2,754.25	1,880.25	4,870	
Dollar Costs	47	49	34	130	
TOTAL AID Loan	282.5	2,803.25	1,914.25	5,000	42
TOTAL GOC	1,733	2,333	2,934	7,000	58
TOTAL PROJECT	2,015.5	5,136.25	4,848.25	12,000	

3. Summary Opinions

The Implementation Plan schedules conservatively the financial needs and inputs to the project. Based upon such a schedule, the Project Committee conclude that the financial plan is more than adequate and more than reasonably firm. The Project Committee has found the project to be overall financially sound.

C. SOCIAL ANALYSIS

1. Target Group

The primary long-run beneficiary of this project will be those small farmers who live within five kilometers of the roads constructed and those small farmers who participate directly in the construction activity. For purposes of this project the target beneficiary can be described as a farmer who:

- has land holdings of up to 10 hectares, with an average holding of less than 5 hectares, of which approximately one half is in production;
- uses a subsistence technology that requires minimal or no inputs other than labor and seeds;
- has a family cash income of less than US$200 per annum;
- has relatively high transport costs;
- has little or no experience with formal credit;
- has limited or no contact with agricultural technicians;
- has little or no access to GOC health or education services.

(For a more detailed description of how the project will be focused on the target group see Part II.B.5.a.(i). Project Selection Criteria).

The total number of potential target beneficiaries has not been determined since this will depend on the final project selection process. The roads will, however, be concentrated in the more densely populated, minifundia areas of the country. Based on their past experience, Caminos Vecinales estimates that the 875 kilometers of roads to be constructed under this project could have a direct impact on between 50,000 and 75,000 small farmers.

2. Characteristics of the Rural Populace

See Part II.A. Background.

3. Small Farmer Organization

There exist in Colombia a wide range of farmer and community level organizations. These organizations may exist for the purpose of conducting business, such as the farmer cooperatives or they may exist for the sole purpose of promoting community well-being, such as the Junta de Acción Comunal (Community Action Groups). In any case, it is through one of these farmer organizations that Caminos Vecinales usually receives a request for a pick and shovel road. Because the beneficiaries themselves usually initiate the request for a road, their motivation and willingness to work on the roads are ensured.

From USAID and GOC past experience with the pick and shovel road program financed under former sector loans, no significant changes in beneficiary level behavior patterns, organization, etc. are anticipated. (See Part II.A.7. The Agricultural Impact of Pico y Pala). In short, the Project Committee believes the project to be totally feasible from the socio-cultural point of view.

4. Spread Effect

It is not anticipated that the target beneficiaries will produce a significant spread effect among themselves as a result of this project. The pick and shovel program is already well-known in the rurural areas of Colombia. In the past, demand on the part of local action groups has always exceeded Caminos Vecinales capacity to administer the construction of pick and shovel roads.

The Project Committee expects that the important spread effect of this project will be within the Caminos Vecinales institution. It is anticipated that the utilization of a set of project selection criteria will be adopted by Caminos Vecinales for the other roads which they construct. This could have a significant impact on the location of other roads in Colombia, which would lead to positive social impacts.

Another important spread effect is expected to be with respect to the question of road maintenance. The mechanisms being built into the project to ensure adequate maintenance is expected to have a beneficial impact on the maintenance of other roads by the various levels of government responsible. Once the importance of properly maintaining existing roads is established, it is anticipated that budget allocations for construction and maintenance will be shifted in order to provide for adequate maintenance.

5. Social Consequences and Benefit Incidence

a. Access to Resources

The pick and shovel roads to be constructed under this project have as their purpose to provide the small farmer beneficiary access to markets and health and education services. The selection criteria take the access question into account. There is no doubt that the project will have a significant impact on the beneficiaries with respect to access.

b. Employment

Because of the labor intensive technology used in the construction of roads finanaced under this project, employment in the rural areas will be affected. Based on past experience, this project should provide at least 3,200 man-years of work distributed among 19,000 farmers. While this may not be significant in terms of the rural unemployment problem in Colombia, employment is not the primary purpose of this project.

Past experience with this program has demonstrated that there has never been a lack of available labor for road construction. In fact, after there has been so much demand for work contracts that Caminos Vecinales has not been able to accommodate to the fact that one can earn a daily wage substantially higher than the average in the area, by working on the roads. Availability of labor is not anticipated to be a problem.

As farmers obtain access to markets, it is expected that they will intensify their production, which in turn will require more labor. The marketing function per se will also be a source of increase labor demand. These factors taken together could cause a substantial impact on employment.

c. Rural Urban Migration

Rural-urban migration in Colombia is presently considered to be a primary problem. The major cities have been growing at alarming rates due, in part, to this migration. This project, however, is expected to have somewhat of a steming effect on rural-urban migration. This is expected to happen as a result of increased demand for labor in the rural areas both by small farmers, who, because of their access to market are able to intensify their production and through the increased activity in marketing, etc. The general improvement in the welfare of the people living in the areas of the new roads is expected to deter rural-urban migration.

d. The Role of Women

The role of women in Colombia in agricultural production and related activities is a minor one on a statistical basis. Only about 5% of the total labor force in agriculture, forestry, hunting and fishing are women. (For comparison, women represent about 20-25% of the total labor force.) There will be an employment creation effect for this project, but not for women.

The impact of this project upon women is, however, more significant than the preceeding would suggest. The following are some tentative hypotheses as to the impact on women:

1. Increased mobility will provide adult rural women with better opportunities for improved health services, such as pre-natal and post-natal care; and more access to the cash economy to sell cottage-industry products.

2. Higher rural family incomes should facilitate educational opportunities for young girls.

3. Better transportation should encourage rural women to increase their contribution to agricultural production through small gardens, etc., creating more disposable income for women.

4. To the extent that women have previously transported produce to the market place, this chore will be reduced in scope to permit women to spend time on personal pursuits.

5. Currently, women play a very active role in the marketing of the farm production. This project should enhance that role by making additional production available for the market.

e. Other Beneficiaries

As mentioned in Part III.D. Economic Analysis, some increase in land values is expected in areas of the new roads. This is an economic benefit which will accrue to the owner of the land, but it could have some social implication in cases as sharecroppers and renters particularly if the landlord increase the rent. This, however, it not anticipated to be a serious problem since less than 17 percent of the farms of five hectares or less are rented or sharecropped, while more than 67 percent are owned outright. Furthermore, there has been a substantial decrease (over 50 percent for renters and 32 percent for sharecroppers) in this form of tenure between 1960 and 1970/1.

Indirect benefits are expected to accrue to that group of people who are engaged in the chain of marketing agricultural products. This group would include truck drivers (who often act as market intermediaries) market middlemen, purchasing agents, wholesalers and retailers. Other indirect benefits will also be derived by the consumers of the increased production. These benefits are impossible to quantify but they clearly have positive social implications.

D. ECONOMIC ANALYSIS

Summary

Fundamentally the economic analysis will be accomplished through two tests of acceptability. The tests will subject all project proposals to descending levels of analysis. At the first order, a checklist of project selection criteria has been developed to screen all project applications. The suggested criteria (See Section II. B) are designed to provide a rough indication of the feasibility of the project with respect to availability of services, road cost, production potential, etc. Assuming a proposal is not rejected, it is passed through a second order of analysis which consists of (a) an area stratification by farm sizes measured by a weighting scheme which favors projects comprised predominantly of the target small farmer group, and (b) an economic rate of return analysis (projects that produce a rate higher than the opportunity cost of capital). All projects that successfully pass both levels of analysis have proven their economic worthiness and (once approved by AID) are eligible for AID loan financing. It is understood that Pico y Pala will apply the same acceptability tests to GOC financed projects, however, AID will not be required to approve those projects.

Lastly, as a test for total project appraisal, an illustrative case is presented to determine a rather conservative measure of the total "Roads Program" impact. That analysis yielded a Benefit/Cost Ratio of 1.25 when discounted at 15 per cent, and an economic rate of return of 19.4 percent.

1. Project Selection

Although this program is characteristically similar to the earlier AID assistance for Pico y Pala roads, there is an important departure tailored toward improving the selection process. The main tools used throughout the project selection are those of economic analysis. Consequently, the problem is to find investment policies that give rise to the most efficient utilization of all resources, including the stock of highways and secondary roads. In short, the primary criteria by which we judge these various policies is that of economic efficiency - getting the most from the least.

The lynch-pin of the approach taken here is the classic penetration road methodology enhanced by a weighting scheme favoring areas predominantly made up of small farmers.

Of course, it is generally accepted that the level road design suggested within this loan, and the subsequent low-cost value of the road hardly suggests a rigorous project analysis for each project. Given the global coverage of potential project site selection, and the desirability of an economic analysis, the magnitude of analytical effort and associated costs would become astronomical. Selection is further bound by the dual objectives of ensuring maximum small farmer participation and stimulating increased production.

The two objectives overlap but they are not statistically coincidential. Therefore, in an effort to satisfy both objectives an optimizing scheme has been devised to include both interests.

The rationale for some form of economic analysis both on the macro and micro levels has been promoted largely because of resource restraints and scarce capital resources. A universal return or minimum acceptable return is probably the best gauge of project selection. That return, expressed as the opportunity cost of capital, is suggested herein as the best measure of acceptability of any project. In Colombia, the cost of capital approaches 15 percent.

Using an economic rate of return and the weighting scheme described below, will ensure that both objectives are optimized and also that socially attractive and profitable projects are selected. Simplicity has been the mainstay of the weighting scheme but should not render it less appropriate than more analytically rigorous approaches.

2. The Weighting Scheme

Farm Distribution and Stratification

The 1970 Colombian census results and DANE household survey data suggest that 41 percent of the Colombian population is rural. The average family size and farm stratification data suggests that 64 percent of the rural populace are farm family members, while 16 percent are exclusively engaged in farm work.

Given the AID objective of reaching as many small farmers as possible, and cognizant of GOC objectives to improve the level of welfare among rural inhabitants, the two objectives were combined to provide the project analyst with a weighting scheme tailored to favor projects predominantly weighted with the target farm size to maximize the quantity of target farmers lying within the project zone. */

*/ By definition, the project is meant to include all farms contained within the zone of influence of the proposed road.

TABLE I

Average Land Holdings in Selected Departments

General Total By Departments	Total Farms	Under 1 Ha.	% of Total	1 - 5 Has.	%	5-10 Has.	%	10-20 Has.	%	Over 20 Has.	%
Antioquia	33,830	13,601	40.2	12,383	36.6	3,683	10.9	2,006	5.9	2,157	6.4
Boyacá	102,713	29,456	28.7	51,482	50.1	12,718	12.4	5,794	5.6	3,263	3.2
Caldas	8,275	2,034	24.6	3,689	44.6	1,338	16.2	679	8.2	535	6.5
Cauca	10,621	2,835	26.7	5,048	47.5	1,407	13.2	707	6.7	624	5.9
Cundinamarca	77,654	27,852	35.9	30,087	38.7	10,290	13.3	5,431	7.0	3,994	5.1
Huila	1,664	426	25.6	765	46.0	220	13.2	116	7.0	137	8.2
Nariño	39,060	7,873	20.2	20,500	52.5	6,048	15.5	2,979	7.6	1,660	4.2
Norte Santander	1,466	142	9.7	841	57.4	279	19.0	128	8.7	76	5.2
Quindío	1,015	198	19.5	405	39.9	199	19.6	118	11.6	95	9.4
Risaralda	1,415	359	25.4	645	45.6	222	15.7	124	8.8	65	4.6
Santander	20,422	3,234	15.8	11,153	54.6	3,083	15.1	1,774	8.7	1,178	5.8
Tolima	1,656	260	15.7	726	43.8	316	19.1	230	13.9	124	7.5
Valle	2,968	740	24.9	1,163	39.2	476	16.0	302	10.2	287	9.7
	302,759	89,010	29.4	138,887	45.9	40,279	13.3	20,388	6.7	14,195	4.7

Weight assignments were derived from the "municipio" stratification and correlated with results from Table I. Fundamentally, total land accumulated under a curve-envelope on a farm-by-farm size basis was utilized to peak out the mean farm size. The solution suggests that the farm size lies somewhere between the range of 1-5 has. and 5-10 has. sizes. After further refinement it was determined that farms between 4 and 6 hectares in size are the largest group. The weighting indicators were assigned as 100 percent, at the median of 1.0 to 5.0hectares representing 100 percent desirability declining outwardly to the less complementary farm sizes. */

Farm Index Level

Farm Size	Less Than 1 Has.	1 - 5 Has.	5 - 8 Has.	8 - 12 Has.	12 - 15 Has.	15-30 Has.
Farm Index	0.50	1.0	0.90	0.75	0.50	0.40

The simplified demonstration that follows illustrates the uses of the weighting scheme. Both examples consist of 17 family units per 100 has. As noted, in the unweighted case (See Table 2), Project "A" and "B" are allowed to compete equally in the economic analysis, although clearly, Project "A" appears to match our AID/GOC objectives more closely than Project "B". After weighting (Table 3) the indices allow for AID/GOC target objectives to prevail, confirming the desirability of Project "A".

At this juncture, the preselection of project sites will have been rendered to an array of subjects that fulfill the combined AID/GOC small farmer objectives. The weighting system does not, however, determine the allocation of scarce resources, nor does it provide a rationale for economic justification of each project. A further analysis is required. This refinement is proposed by submitting each project to an economic rate of return test, an analytical process to be undertaken by the Caminos Vecinales project analysis teams.

*/ Actually this approach has one shortfall, it cannot distinguish between cultivated land and land which is either fallow, virgin, or unsuitable for cultivation. However, this factor will be investigated further within the project analysis desk survey. The equity relationship which is sought at this level of investigation is strictly ownership size.

TABLE 2

- Unweighted Ranking -

Farm Stratification / (Total Area)	Project "A" 100 Has.	Project "B" 100 Has.
<1 Ha.	0/0	6/6
1 - 4.99 Ha.	11/53	6/24
5 - 7.99 Ha.	4/24	1/6
8 - 11.99 Ha.	1/8	1/9
12 - 14.99 Ha.	0/0	0/0
15-30 Ha.	1/15	3/55
Total Unweighted	17/100	17/100

TABLE 3

- Weighted Ranking -

Farm Stratification/Distributional	Weights	Weighted Project "A"	Weighted Project "B"
<1 Ha.	0.50	0/0	3.0/6
1 - 4.99 Ha.	1.0	110/53	6.0/24
5 - 7.99 Ha.	0.90	3.6/24	0.9/6
8 - 11.99 Ha.	0.75	0.75/8	.75/9
12 - 14.99 Ha.	0.50	0/0	0/0
15-30 Ha.	0.40	0.40/15	1.2/55
	Totals	15.25/100 has.	11.85/100 has

Select Project "A" = 15.75

UNCLASSIFIED

3. Economic Analysis Teams and the "Desk Top Survey" Approach

In 1972, AID financed a cadastral program (AID Loan 514-L-062) to assist the Colombian government in developing data on land holdings. As a result of that program, NASA-ERTS imagery and conventional aerial photo reconnaissance have covered approximately 90 percent of Colombia's rural areas and all of the urban centers. Using this photo coverage, which provides data on soils classes as well as land holding patterns, the task of farm measurement and crop yield estimates within each project zone will be greatly simplified. It will afford the economic analysis teams a means of measuring the potential expansion of farms and farm production and road construction cost estimate within the project area.

The project analysis teams will be comprised of 3 professionals, a project economist, an engineer, and an agronomist, as well as a community representative from the project region. They will visit each project area to ascertain the levels of farm technology, analyze the land expansion possibilities and coordinate the road alignment. In this rather cursory fashion, the economic returns will be determined through a discounted cash flow methodology providing the necessary measurement of project worthiness.

This rationale provides the GOC with the assurance that scarce resources will be allocated to projects with returns greater than alternative investments within the rural sector, and provides a first-step introduction to economic analysis. Over time the outcome should lead eventually to a planning section within Caminos Vecinales capable of developing projects of its own, along with the appropriate economic analysis, adequate for submition to the international lending institutions or other national ministries.

Discussion of Project Life

The analysis suggests that a rather unsophisticated geometric design would suffice for the Pico y Pala roads. The limiting criteria illustrated in the Technical Analysis (Section III.A) suggests that roads of this nature usually deteriorate within 10 years through normal wearing, weathering and erosion of the side slopes. Assuming the road fulfills our developmental expectations, it will have reached volumetric vehicle capacity at some point within the economic life timeframe. At that juncture, a new project investment may be required, including perhaps reshaping of the roadbed, minor realignments, and widening. Obviously, the residual value at the end of the road life is not zero, because the roadbed represents a substantial investment in future construction costs.

This should be accounted for in the economic analysis as a residual value to the project. It is usually represented as a discrete cash income at the termination of project life (i.e. the 10th year). Generally, it is acceptable to allow 20 percent of the initial road cost as residual for the roadbed. However, given the rocky nature of the Colombian terrain, it is suggested that a 30 residual factor be used in light of the heavy construction cost outlays. On the other hand, concrete culverts and bridges should be assigned with economic lives somewhat greater than 10 years.

4. Economic Returns to Society as a Whole: An Illustrative Case

The purpose of this section is to provide some illustrative statistical basis for estimating what aggregate impact the access roads are likely to have on agricultural production and incomes of small farmers.

The limited information in Colombia does not provide much statistical data on the impact of feeder roads. Consequently, an illustrative benefit/cost analysis for the total project has been calculated, based upon reasonable estimates of the following parameters:

1) Estimated increment in income per hectare as a result of the various economic benefits from the roads;

2) Estimated land area affected by the roads;

3) Rate at which farmers will adopt new agricultural and marketing practices which would result in the estimated income increment.

As a rough estimate of possible income increments, a random subsample of 50 observations was selected from 2500 INCORA questionnaires taken in 1970. A frequency distribution was made by categories of net income per hectare, in 500 peso intervals. Extreme observations were eliminated as special cases, leaving 42 observations with net income between 0 and 4200 pesos. These displayed a fairly well defined bimodal distribution which was taken as a proxy between traditional and technified agriculture. The means of the two modal groups were C$886 and C$2336. These means were rounded upward to approximate inflation since 1970, giving means of C$1000 and C$2500, or a difference of C$1500. This was checked against 1973 OPSA and FFA surveys, which yielded differences between traditional and technified farms of roughly the same magnitude (actually slightly higher: C$1315 versus C$3160, or a difference of C$1845).

On the assumption that access to transport vs. isolation is at least crudely comparable to the technified vs. traditional split, it seemed reasonable to use C$1500 as an approximation (which is probably conservative) of the income increment possible given the advantages offered by the road. Based on an average cost of US$12,000 per km. this would mean that with a $12 million project of which $10.6 million would be for construction, about 890 km of roads could be constructed.

After considerable discussion about the zone of influence on each side of the road, given Colombian conditions (largely mountainous terrain) a realistic (walkable) 5 km zone was assumed, creating 875,000 has. of total area that could be potentially affected by the roads. Of this, it was assumed (based on the overall average of municipios studied) that only about 20 percent of the total area was presently cropland, e.i., where incomes could be improved simply by new technology. This suggests a total of 175,000 hectares of potential cropland, a figure which was utilized in the benefit/cost analysis. Should more intensive utilization of the land area in the zones of influence take place, it is because an additional 15 percent of the area in the zone of influence is in "fallow" (having been previously cropped) representing another source of increased income.

To be realistic, it was assumed that the income increment would occur over time as farmers adopted new agricultural and marketing practices. Based upon "adoption theory" a rate of adoption was constructed in which a small percentage of farmers would adopt such produces in the first year, with a growing rate of adoption in succeeding years until roughly 3/4s of the farmers would have adopted by the sixth year following completion of the road, and a slowed rate of adoption from that point on ultil all farmers were taking advantage of the potential income increment. This S-shaped curve of adoption is consistent with the theory and although somewhat conservative, represents a realistic pattern for the flow of benefits over time.

Using these assumptions, the illustrative benefit/cost analysis as given in following tables was derived. The results indicate a benefit cost ratio of 1.25 using a 15 percent opportunity cost to capital and an internal rate of return of 19 percent. Benefits were staggered, representing the completion of the roads in each year and the starting of the flow of the benefits in the year following road completion. The adoption rate assumed is included in the calculation of the benefits.

10.5 Mil Construction (C$ x 1000)

Year	Road Invest.	Drainage	Mainten. 1/	Total Cost	Discounted Cost at 15%	C$1500/ha. of Income Incr.	Benefits Annual Accum.	Benefits Derived from 1st Yr.	Benefits Derived from 2nd Year	Benefits Derived from 3rd Yr.	Benefits Total	Discounted Benefits at 15%	Net Cash Flow
1	96,075	10,675	--	-106,750	-92,830	--	--	--	--	--	-0-	--	-106,750
2	96,075	10,675	5,337	-112,087	-84,749	--	--	--	--	--	-0-	--	-112,087
3	96,075	10,675	10,675	-117,425	-77,207	2.5	6,542	2,187	--	--	2,187	1,437	-115,238
4			16,012	- 16,012	- 9,156	7.5	19,688	6,562	2,187	--	8,749	5,003	- 7,263
5			16,012	- 16,012	- 7,961	17.5	45,937	15,312	6,562	2,187	24,061	11,963	8,004
6			16,012	- 16,012	- 6,921	32.5	85,313	28,437	15,312	6,562	50,311	21,749	34,299
7			16,012	- 16,012	- 6,019	52.5	137,812	45,937	28,437	15,312	89,686	33,713	73,674
8			16,012	- 16,012	- 5,234	77.5	203,438	67,812	45,937	28,437	142,186	46,481	126,174
9			16,012	- 16,012	- 4,552	87.5	229,687	76,562	67,812	45,937	190,311	53,725	174,299
10			16,012	- 16,012	- 3,958	93.5	244,428	81,812	76,562	67,812	226,186	55,913	210,174
11			16,012	- 16,012	- 3,440	97.5	255,937	85,312	81,812	76,562	243,686	52,368	227,674
12			10,675	- 10,675	- 1,995	100.0	282,500	112,052*	85,312	81,812	279,176	52,178	268,501
13			5,337	- 5,337	- 867	--	--	-0-	112,052*	85,312	197,364	32,072	192,027
14			-0-	-0-	-0-	--	--	-0-	-0-	112,052*	112,052	15,832	112,052
					-314,889							382,435	

Benefit/Cost Ratio = 1.25 $\left(\frac{382,435}{314,889}\right)$

* Includes 20% Salvage Value = 21,350 (Roads) + 3202 (Drainage) = 24,552

1/Maint. = 5% of Construction Costs

10-year project (i.e. Economic = 10 Yrs. per Road,

RATE OF RETURN (ECONOMIC)

Year	Net Cash Flow	Discounted at 20%	Discounted Amount	Discounted at 15%	Discounted Amount
1	-106,750	.8333	-88,955	.8696	-92,830
2	-112,087	.6944	-77,833	.7561	-84,750
3	-115,238	.5787	-66,688	.6575	-75,770
4	- 7,263	.4823	3,503	.5718	- 4,153
5	8,004	.4019	3,216	.4972	3,979
6	34,299	.3349	11,487	.4323	14,827
7	73,674	.2791	20,548	.3759	27,694
8	126,174	.2326	29,348	.3269	41,246
9	174,299	.1938	33,779	.2843	49,553
10	210,174	.1615	33,943	.2472	51,955
11	227,674	.1346	30,645	.2149	48,927
12	268,501	.1122	30,175	.1869	50,183
13	192,027	.0935	17,955	.1625	31,204
14	112,052	.0779	8,729	.1413	15,833
			-10,198		77,898

$$IRR = 15\% + \frac{77,898}{88,096} (5) = 19.42\%$$

$$RR = {}_{2} + \frac{PW_2}{PW_1 - (PW_2)} \quad 20\text{-}15$$

PART IV - IMPLEMENTATION ARRANGEMENTS

A. ANALYSIS OF THE RECIPIENT'S AND AID'S ADMINISTRATIVE ARRANGEMENTS

1. Recipient: Caminos Vecinales

a. Structure and Legal Status

The Fondo Nacional de Caminos Vecinales was created in 1961 as an autonomous agency under the Ministry of Public Works, in accordance with Decree-Law 1650 of July 14, 1960 and Decree-Law 1084 of May 23, 1961. Its principal function is the construction, improvement, and maintenance (until completion) of feeder roads. This proposed project would be accomplished through the National Coordinator of Pico y Pala, who is responsible for the labor-intensive activities of Caminos Vecinales.

Caminos Vecinales is governed by a Junta Directiva, composed of the Minister of Public Works; representatives of the Ministry of Agriculture; Ministry of Government; and the National Coffee Federation; and three representatives of the President. Caminos' daily operations are managed by the Executive Director who is appointed by the Minister of Public Works. His principal subordinate offices are: Program and Control; Engineering; Administration; Pico y Pala; and Regional Units.

The Pico y Pala program has a total of 173 professional employees of which 92 are direct-hire and 81 are sub-contracted from Caminos Vecinales. Currently, there are approximately 40 engineers, 30 cashiers, 53 inspectors, 45 surveyors, and 4 accountants under the National Coordinator. (See Annex II, Exhibit 4 for personnel chart.) There are 24 Regional Offices throughout the country which report to the National Coordinator (See following chart):

Organization — Caminos Vecinales Organization

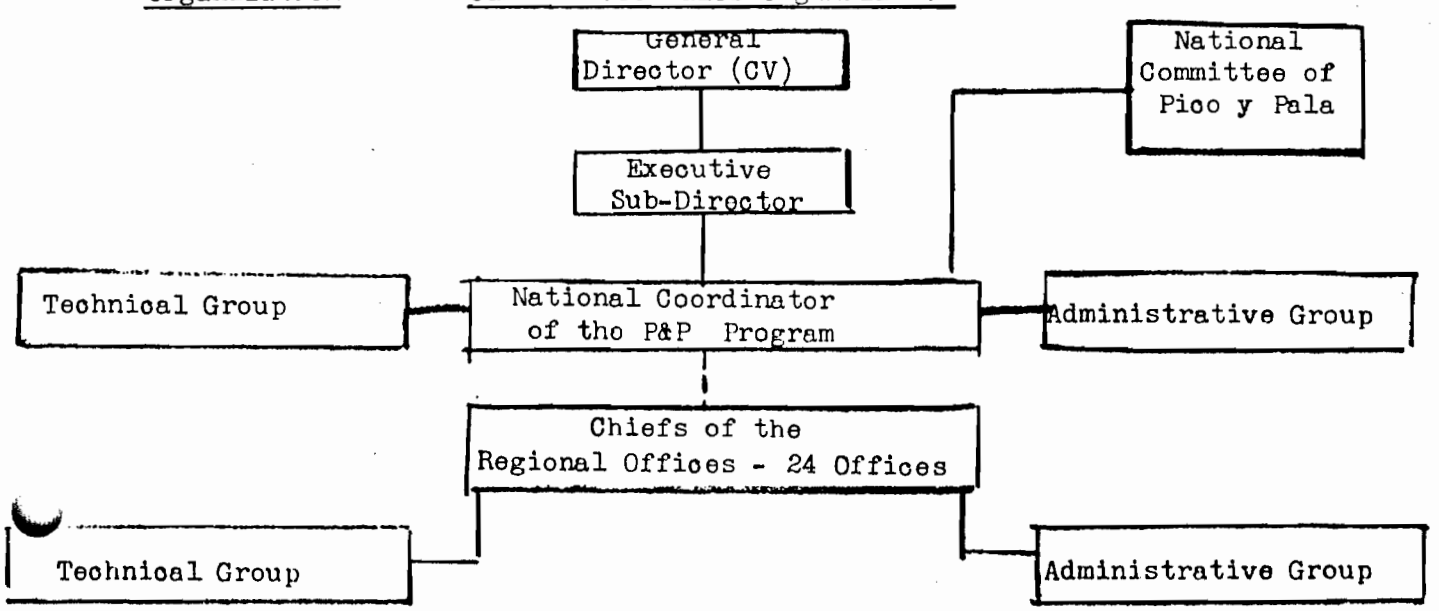

(i) National Coordinator of the Pico y Pala Program

The National Coordinating Office of the Pico y Pala program is headed by the National Coordinator who reports directly to the Executive Subdirector. His activities include managing, directing, and coordinating planning activities, reviewing studies prior to construction of Pico y Pala roads; and monitoring construction progress.

(a) Technical Group (Central Office)

The Central Technical Group coordinates and supervises the work of the technical groups at the regional levels. This office has two engineers. Each one is assigned a zone of the country; it is his duty to see that all roads are progressing properly, are meeting specifications according to original design, and are satisfactory in all other engineering aspects.

(b) Administrative Group (Central Office)

The administrative group in the Central Office is in charge of central bookkeeping and supervision of the administrative regional offices. They receive all the accounting data of how much has been paid, social security payments, and other accounting information. The professional personnel of this office consits of two accountants and two assistant accountants.

(ii) Regional Offices

Each regional office is in charge of coordination, direct supervision, payments for the roads constructed in that region.

(a) Technical Group

There is an approximate ratio of 1 audit engineer for every 2 roads in construction. Currently there are 38 engineers. Their responsibilities include direct supervision of physical accomplishments in each road, and technical auditing with respect to location, specifications, etc.

(b) Administrative Group

This group is formed of a cashier/supplier and a secretary who maintain all books and records, make all payments, and keep records on all tools and equipment.

b. Road Construction Procedures

After the community or a GOC agency makes a request for a road, a prefeasibility study of the proposed road is carried out by an engineer from the National Coordinating Office. (In the future, an economist and agronomist will form part of the team). The team then carries out an economic analysis using internal rates of return calculations. After, the Coordinating Office approves the project, an engineering study of the project is done, including a route selection, calculation of quantities, drainage or bridge structures. The study is done by a Regional Office group composed of an audit engineer, cashier-supplier, and inspector topographer. The Regional Office chief supervises the survey. See Annex II.3 (Pico y Pala procedures).

After the survey is finished and funds are available, CV prepares a contract with a local contractor who hires the personnel. The CV audit-engineer supervises the work under the direction of the Regional Chief. The farmers in the area are contracted to do the excavation work. Culverts or bridges are contracted separately following the excavation phase. A crushed rock or gravel surface is then applied, also by separate contract. The excavation phase contracts are with individuals for short segments of the road. The unit price in excavation contracts are roughly similar to the cost of the same work using mechanized equipment.

The individual and team contractors are supplied with picks, shovels, and wheelbarrows. The cost of any explosives are deducted from the contract. Culverts and bridges are taken from Ministry of Public Works standard designs.

In the Pick and Shovel program, advantage is taken of the unskilled labor that the farmer can provide and road sections are held exclusively in cut section since fill sections would require compaction. Nevertheless, a fill section occasionally cannot be avoided and hand methods of compaction are employed. A "resident" CV engineer and a local farmer are assigned to each project. There do not appear to be any technical difficulties in coordinating the work effort.

After the road is finished, a final liquidation report is prepared, including the documentation for delivery of the road to the Departmental Public Works Office.

To provide additional communication with the national office, two engineers cover the country. One is assigned to each of the two zones. He visits the working fronts of his zone periodically and serves as a liaison between the National Coordinating Office and the Regional Unit. In their visits, the engineers verify work quality and progress, given instructions, and solve technical problems, in coordination with the regional office chief. After each visit, they report to the National Coordinator. This arrangement appears to satisfy the need for field-headquarters communication, although the effectiveness of the arrangement varies with the personnel.

c. Observations

Based on AID's experience with the program, the executing agency is capable and experienced in feeder road construction. Several AID/W engineers have commented favorably on their capacity. The IDB has had the same experience. Three areas do appear to need improvement however: better support to agricultural development through road selection, further efforts to improve "after acceptance" maintenance, and the need for an evaluation section within Pico y Pala. The project description points out how AID loan funds will be used to address these problems.

2. AID Loan Monitoring and Evaluation

The USAID Project Committee will review CV subproject anaylsis to verify adherence to the mutually agreed criteria and analytical procedures. All projects using AID funds will require prior AID approval. Periodic on-site inspections of selected subprojects will be carried out by Mission personnel.

For each subproject approved for financing under the program CV will provide USAID with copies of:

a. the schedule for project execution;

b. financial plan including disbursement schedule;

c. the CV report setting forth the planned implementation of the project, including compliance with the selection criteria.

The CV will submit to USAID monthly, quarterly and annual reports with information on progress against that planned in the implementation plan and as reflected in the output targets of the logical framework.

Starting in 1976, evaluation reports will be prepared annually by the CV Office of Evaluation and will include evidence of changes in the goal and purpose level indication in the logical framework. The Mission will use the above mentioned periodic reports plus the evaluation reports to prepare, in cooperation with the CV staff an annual joint review of the loan's progress.

There is, at present, sufficient expertise in USAID/C to backstop this project. USAID/C currently has the full-time transportation engineer and one full-time loan officer-engineer. USAID/C will conduct on-site engineering inspections of each subproject after completion and will conduct ongoing on-site inspections periodically. There will be closer monitoring by CV which will provide adequate assurance of proper implementation. Further, annual inspections are anticipated by TDY engineer assistance from AID/W.

B. IMPLEMENTATION PLAN

1. Borrower and Implementing Agency

The Borrower and Implementing Agency will be Caminos Vecinales, a semi-autonomous agency under the Ministry of Public Works of the Government of Colombia. Caminos Vecinales is responsible for the planning and construction of feeder roads in Colombia. The Government of Colombia represented by the Ministry of Finance will guarantee the repayment of the loan. For repayment purposes, the Ministry of Finance will include the AID loan scheduled repayments in the budget of the Borrower, in this case Caminos Vecinales, and then will carry out financial transfers where AID is repaid from National treasury sources.

2. Loan Disbursements for Road Construction

The proposed loan represents a change from recent AID experience in Colombia in that a road construction disbursements will be made directly to the implementing agency, Caminos Vecinales. Disbursements of the loan are to be made over three years from meeting Initial Conditions for Disbursement.

Timely cash flow for labor intensive road construction is essential for success of this project. Local small farmers are actually the road construction "contractors" and require weekly payments punctually or they will not participate as road builders. The following paragraphs include an analysis of the cash flow and the implications for AID loan disbursements with a recommended method of disbursement.

Figure 1 is an attempt to graphically demonstrate the expected sub-project cash requirements that must flow to the small farmer contractors. Cash requirements are based on several assumptions:

- Average road length - 9.0 kilometers
- Average construction cost - $12,000 per km.
- Average road construction progress - 1.9 km/month
- The 10.7 million dollars of road construction financing will be spent for completed sub-projects necessitating start-up of the last sub-project 10 months before TDD.
- Start-up of the first roads can commence two months after meeting initial CP.

From the above assumptions 100 roads are scheduled on Figure 1 to be started and completed within 36 months.

Also charted are the GOC counterpart budgetary cash inflows expected to reach the field offices for payment to the small farmer "contractors". As can be seen, the GOC budgetary inflow is not regular. In the first two months of the CY no appreciable amounts are expected to be available. Fortunately, no sub-projects are expected to start-up in the first two months of the first year of the project. Methods to eliminate stoppage of GOC budgetary funds in the first part of the CY will be discussed with the GOC and included in the loan financed budgetary and cost accounting study. Using a strict method of Fixed Amount Reimbursement after completion of sub-project, AID disbursements are imposed on the Graph.

The Graph gives some interesting insights to sub-project implementation and to the feasibility of constructing and completing 100 roads within the cash flow parameters established. The Graph indicates that if the project is to complete 100 roads at .9 kilometers each in the period to be allowed for disbursement, cash flow shortages will occur 7 months after the meeting of the Initial Conditions Precedent for Disbursements and continue to occur until the 26th month when AID reimbursements and GOC budgetary flows will be much greater than cash requirements. The possibility of requiring the Borrower to change the principles of budgetary cash flows or borrowing to meet the cash requirements was rejected by the Mission as not very feasible in Colombia at this time. Also the alternate of reducing the number of sub-projects and reducing cash requirements to meet GOC budgetary cash inflows was rejected by the Mission. Lowering the number of sub-projects would be contrary to the objective to benefit the rural poor by providing access.

One of the most important observations from Figure No. 1 is the indication that as the project is terminated, GOC budgetary cash inflows will be greater than the current cash requirements. The timing is such that these late cash inflows cannot be used as counterpart to completing the 100 sub-projects as scheduled. A possibility is to stretchout and slow down the sub-projects to allow the use of the GOC cash inflows for the project. This alternative has been rejected by the Mission as being inferior to another alternative - that the excess of GOC cash flows over requirements should be used for new projects which cannot be completed by the TDD of the loan. It has been judged essential that at the TDD, there are ongoing sub-projects in implementation for the continuation of the Pico y Pala program in CY 1979.

DRAWING PAPER NO. 1280-10
TRACING PAPER NO. 1227-10
CROSS SECTION-10X10 TO 1 INCH
AQUABEE
MADE IN USA

FIGURE 1. CASH FLOW WITH STRICT FAR METHOD

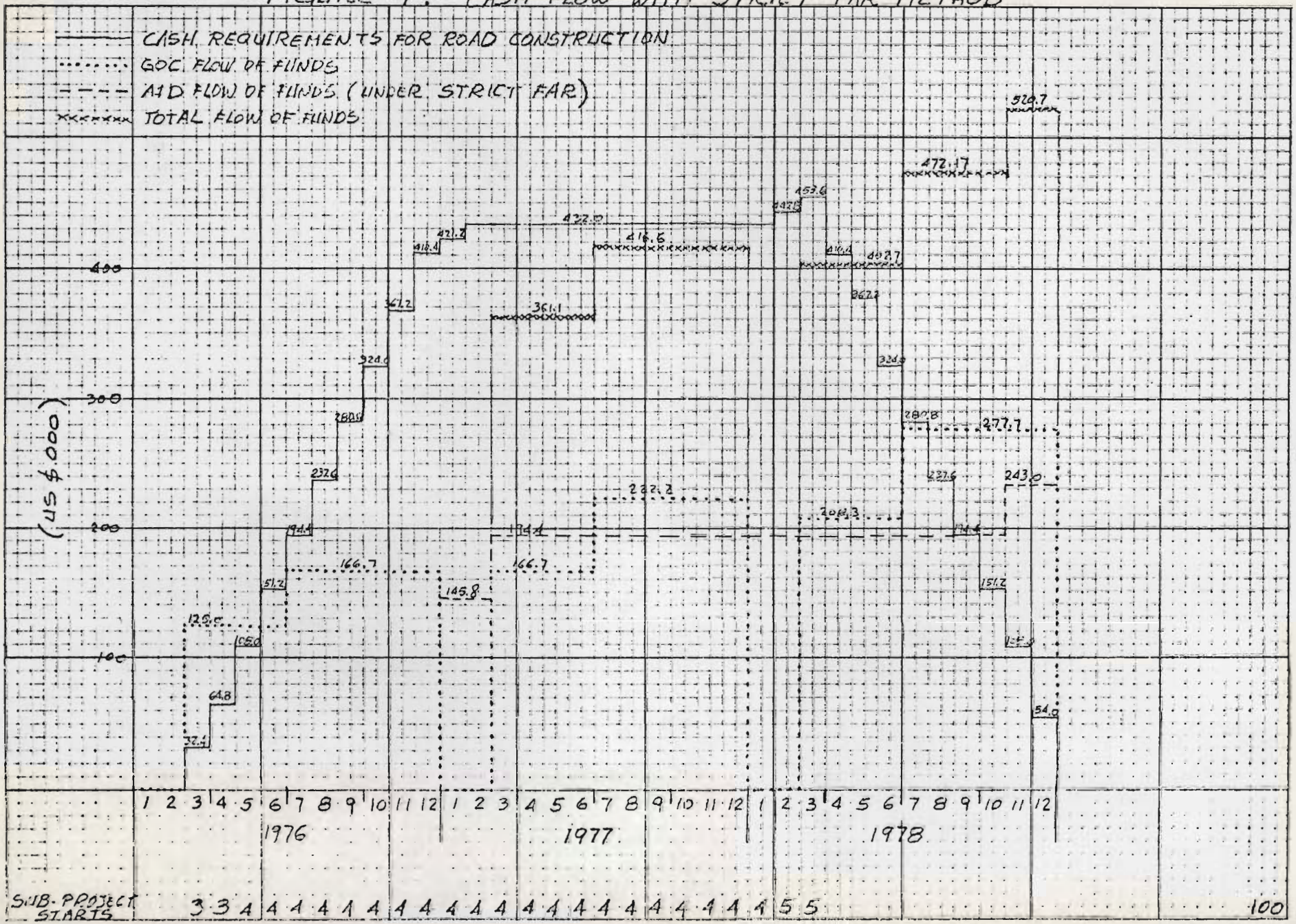

Caminos Vecinales will start up a limited number of sub-projects per month in the last 9 months of the project out of its own counterpart funds to the project. The number of start-ups could be expanded if the GOC could gather additional resources in late CY 1978, but even without additional resources the number of start-ups would be a good beginning to an ambitious or similar CY 1979 Pico y Pala program . The sub-projects to be started-up in CY 1978 are calculated to cost US$1,080,000 leaving US$9,620,000 available in the project to complete 89 sub-projects in 36 months.

Figure 2 illustrates the cash flow requirements for 89 sub-projects to be completed with GOC and AID financing before the TDD and 22 sub-projects to be initiated with GOC funds only. With this scheduling, the excess flow of GOC inputs are accounted for at the end of the project. However, the cash flow shortages still remain. The USAID Mission proposes to solve the cash flow shortages with payments after completion of sub-projects and with progress payments if and only when necessary and on a monthly cash requirement basis. Progress payments, not advances, will be assigned to individual sub-projects and reconciled against the final payment when the sub-project is completed. The sub-project cost will be determined before initiation of each sub-project and the AID share will be determined from the overall ratio of AID/GOC inputs to sub-projects to be completed under the project. In this manner, the Fixed Amount Reimbursement Method for completed sub-projects with some progress payments can be implemented in this project. The method is detailed in Annex V.

Basically, the method will not require progress payments until the 11 month. Progress payments will be made on those sub-projects started or about to start in the month when there exist cash requirements. Final Fixed Payments will begin in the 13th month to meet cash flow requirements and will be reconciled against any progress payments made previously.

For purposes of establishing sub-project costs in accordance with a Fixed Amount Reimbursement method, before initiation of each sub-project, three types of terrain conditions were considered.

These types or combinations could be encountered in any sub-project. They are:

a. Comparatively level and/or gently undulating high-potential agricultural soils.

b. Highly undulating to hilly medium-potential agricultural soils.

c. Hilly to mountainous mediocre potential agricultural soils.

DRAWING PAPER NO. 1280-10
TRACING PAPER NO. 1227-10
CROSS SECTION-10X10 TO 1 INCH
AQUABEE
MADE IN USA

FIGURE 2. PLAN OF EXPENDITURES

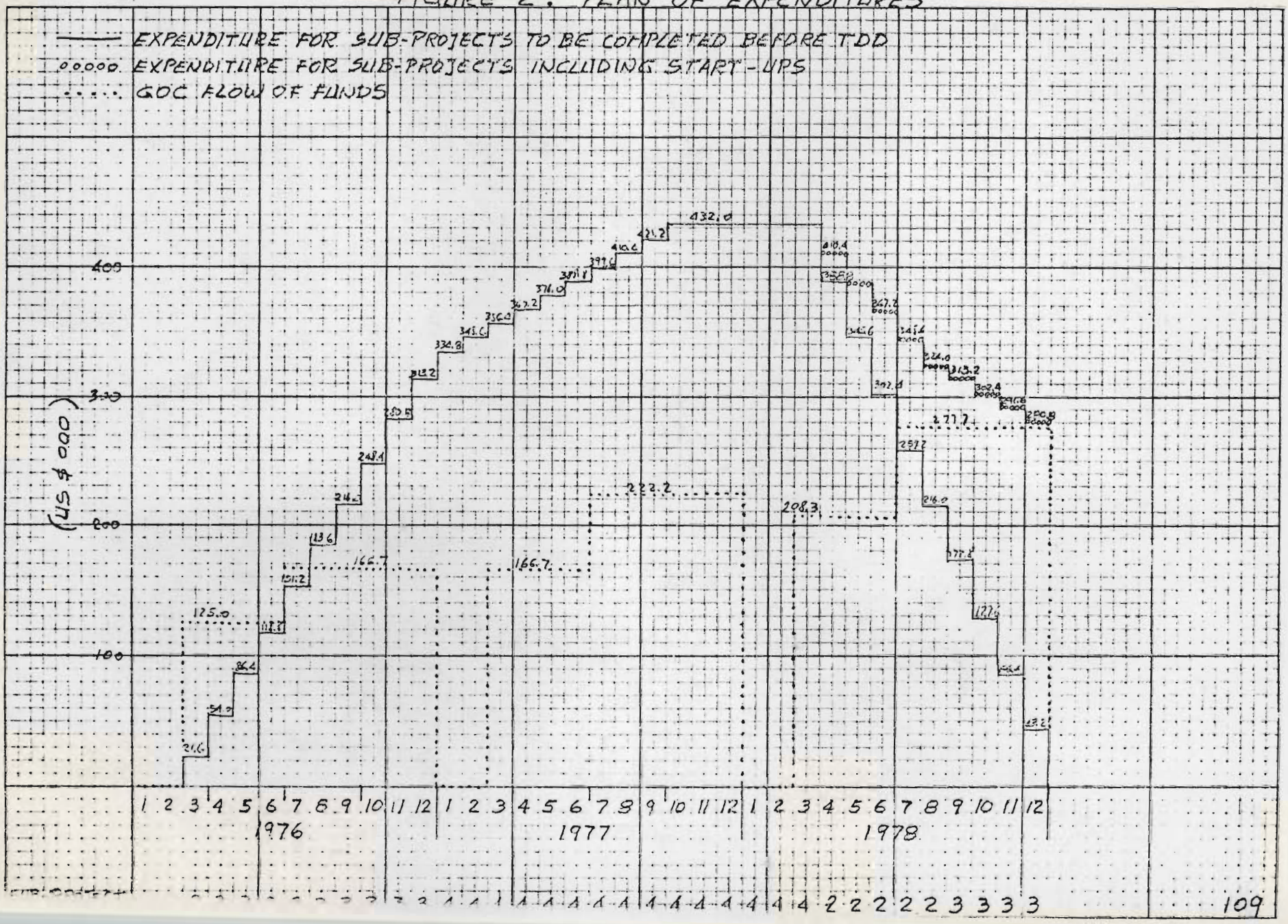

Based upon costs of previous Pico y Pala projects, it is believed that reasonable US dollar costs per kilometer of construction in the above types of terrain would be about ± $2,000/km:

a. $6,000

b. $12,000

c. $18,000

The above costs will be used as a starting point in establishing the cost of a sub-project. In all requests for AID road construction financing, estimated costs will be presented to reflect the above terrain conditions and any wide variance in the above unit costs will have to be justified.

3. Loan Disbursements for Institutional Improvement

Disbursement for training and technical assistance will be made directly by AID using standard obligating documents, contracting and payment procedures.

4. Planned Performance Tracking System

The Planned Performance Tracking Network is attached in Annex VI From the network it can be seen that the most critical action will be the contracting and arrival of the technical assistance input for preparation of the sub-project selection methodology. Several transportation/agricultural economists have been contacted. However, if their participation cannot be scheduled as planned, AID/W TDY assistance is possible under AID operating expenses. In this same regard, Caminos Vecinales has made assurances that the Selection and Evaluation Office will be fully staffed when the technical assistance is scheduled to arrive.

Other technical assistance and training inputs are scheduled as early as practically possible given the best estimate of the capacity of Caminos Vecinales to identify and contract TA and implement training.

C. EVALUATION ARRANGEMENTS FOR THE PROJECT

Evaluation arrangements have been built into the project as indicated in Part II.A.6.a.(ii) Sub-Project Evaluation and as explained in Part IV. A.2 AID Loan Monitoring and Evaluation.

D. CONDITIONS, COVENANTS AND NEGOTIATING STATUS

In addition to the normal AID conditions and convenants, the proposed loan will require as:

1. Conditions Precedent to Initial Disbursement

Caminos Vecinales with USAID approval will have contracted for or already received technical assistance in the preparation of a sub-project selection methodology.

2. Conditions Precedent for Road Construction

Caminos Vecinales will submit to USAID for approval detailed subj-project criteria and the methodology of sub-project analysis which would be utilized in the selection of all Pico y Pala roads in this program.

3. Special Covenants

a. Caminos Vecinales will covenant to have counterpart funds available as needed for road construction and maintenance purposes as indicated in the Project Description annexed to the Loan Agreement.

b. Caminos Vecinales will convenant to take such necessary actions to implement institutional improvements as indicated in the Project Description annexed to the Loan Agreement.

CHECKLIST OF STATUTORY CRITERIA

(Alliance for Progress)

In the right-hand margin, for each item write answer or, as appropriate, a summary of required discussion. As necessary, reference the section(s) of the Capital Assistance Paper, or other clearly identified and available document, in which the matter is further discussed. This form may be made a part of the Capital Assistance Paper.

The following abbreviations are used:

FAA - Foreign Assistance Act of 1961, as amended.

FAA,1973 - Foreign Assistance Act of 1973.

App. - Foreign Assistance and Related Programs Appropriation Act, 1974.

MMA - Merchant Marine Act of 1936, as amended.

BASIC AUTHORITY

1. FAA Sec.103; Sec.104; Sec.105; Sec.106; Sec.107. Is loan being made

   a. for agriculture, rural development or nutrition;

COUNTRY PERFORMANCE

Progress Towards Country Goals

2. FAA Sec.208; Sec.251(b)

A. Describe extent to which country is:

(1) Making appropriate efforts to increase food production and improve means for food storage and distribution

Colombia is making appropriate efforts through its Office of Agricultural Planning, Institute of Agricultural Marketing, Institute for Development of Natural Renewable Resources, and the Colombian Agricultural Institute. These efforts are more fully described in Section I of this CAP as well as in the analysis of the Agriculture Sector dated March, 1972 as revised May, 1973 and June, 1974.

(2) Creating a favorable climate for foreign domestic private enterprise and investment.

With respect to domestic private investment a favorable climate has been maintained and investment continues at a respectable rate. With respect to foreign private investment, some enterprises, which might possibly fall within the restrictive provisions of the Andean Code, may have been deterred by the uncertain legal status of the Treaty of Cartagena and the Andean Code from investing in Colombia: but the amount of investment, if any, so deterred is a matter of speculation.

(3) Increasing the public's role in the developmental process.

The public's role in the development process is clearly being increased, as witnessed by the programs instituted by the Colombian Government under this loan and other programs also assisted by A.I.D. loans, entailing substantial increases in the financing of education and of credit to small and medium sized farmers.

(4) (a) Allocating available budgetary resources to development.

The Mission has concluded that Colombia's investment in the four crucial sectors of the economy concerned with overall development is both "reasonable and feasible."

(b) Diverting such resources for unnecessary military expenditure and intervention in affairs of other free and independent nations (See Item 10)

It is considered that some expenditure for modernization of Colombia's armed forces is justifiable.

Colombia is not intervening in the affairs of other free and independent nations,

(5) Making economic, social, and political reforms such as tax collection improvements and changes in land tenure arrangements, and making progress toward respect for the rule of law, freedom of expression and of the press, and recognizing the importance of individual freedom, initiative, and private enterprise.

Colombia, with the assistance of the Mission, has embarked on a program of substantially improving tax collection procedures, which has resulted in increased fiscal revenues. Colombia's program of land reform is discussed in detail in Parts One and Two of the 1972 Agricultural Sector Loan Paper. The development plans of the GOC recognize the importance of individual initiative and private enterprise. Individual freedom of press, speech and religion continue.

(6) Adhering to the principles of the Act of Bogotá and Charter of Punta del Este.

Colombia is adhering to the principles of the Act of Bogotá and the Charter of Punta del Este.

(7)Attempting to repatriate capital invested in other countries by its own citizens.

Under the 1967 Foreign Exchange Statute, Colombian nationals were to repatriate demand and time deposits by mid-1967, upon their sale, and no Colombian national was to invest abroad without the prior approval of the Department of Planning. During 1967 it is estimated that up to

$50 million was repatriated, which represents the bulk of the capital which was overseas. Presently, very strict laws are in effect which limit severely capital flight from Colombia.

(8) Otherwise responding to the vital economic, political, and social concerns of its people, and demonstrating a clear determination to take effective self-help measures.

The GOC is undertaking effective self-help measures in response to vital concerns of its people.

B. Are above factors taken into account in the furnishing of the subject assistance?

Yes.

Treatment of U.S. Citizens by Recipient Country

3. FAA Sec.620(c). If assistance is to a government, is the government liable as debtor or unconditional guarantor on any debt to U.S. citizen for goods or services furnished or ordered where (a) remedies and (b) debt is not denied or contested by such government?

According to the best information available, Colombia is not known to be so indebted.

4. FAA Sec.620(e)(1). If assistance is to a government, has it (including government agencies or subdivisions) taken any action which has the effect of nationalizing, expropriating, or otherwise seizing ownership or control of property of U.S. citizens or entities beneficially owned by them without taking steps to discharge its obligations toward such citizens or entities?

No such action is known to have been taken

5. FAA Sec.620(o). Fishermen's Protective Act. Sec. 5. If country has seized, or imposed any penalty or sanction against, any U.S. Fishing vessel on account of its fishing activities in international waters.

Apart from an incident which occurred in 1967, which was satisfactorily resolved, no such seizure, penalty or sanction has occurred.

a) Has any deduction required by Fishermen's Protective Act been made?

N.A.

b) Has complete denial of assistance been considered by A.I.D. Administrator?

N.A.

Relations with U.S. Goverment and other Nations.

6. FAA Sec.620(a). Does receipient country furnish assistance to Cuba or fail to take appropriate steps to prevent ships or aircraft under its flag from carrying cargoes to or from Cuba?

In March, 1975 Colombia restablished diplomatic relations with Cuba, and will shortly exchange Ambassadors with Cuba.

7. FAA Sec.620(b). If assistance is to a government, has the Secretary of State determined that it is not controlled by the international Comunist movement?

Yes.

8. FAA Sec.620(d). If assistance is for any productive enterprise which will compete in the United States with United States enterprise, is there an agreement by the recipient country to prevent export to the United States of more than 20% of the enterprise's annual production during the life of the loan?

Loan funs will not finance any production enterprise which will directly compete.

9. FAA Sec.620(f). Is recipient country a Communist country?

No.

10. FAA Sec.620(i). Is recipient country in any way involved in (a) subversion of, or military aggression against, the United States or any country receiving U.S. assistance, or (b) the planning of such subversion or aggression?

No.

11. FAA Sec.620(j). Has the country permitted, or failed to take adequate measures to prevent, the damage or destruction, by mob action, of U.S. Property?

Colombia is taking adequate measures to prevent such damage or destruction.

12. FAA Sec.620(l). If the country has failed to institute the investment guaranty program for the specific risks of expropriation, in convertibility or confiscation, has the A.I.D. administration within the past year considered denying assistance to such goverment for this reason?

The GOC signed an investment guaranty bilateral agreement in 1963, and has cooperated in implementing the guaranty program to date. However, the agreement has not been ratified by the Colombian Congress. For this reason, the "Administrator's Determination" under which the program has operated was not renewed upon its expiration on December 31, 1970. OPIC currently is studying the question of whether to continue the program in Colombia. Pending this study, the Mission recommends against denying assistance.

13. FAA Sec.620(n). Does recipient country furnish goods to North Viet-Nam or permit ships or aircraft under its flag to carry cargoes to or from North Viet-Nam?

No.

14. FAA Sec.620(q). Is the government of the recipient country in default on interest or principal of any A.I.D. loan to the country?

No.

15. FAA Sec.620(t). Has the country severe diplomatic relations with the United States? If so, have they been resumed and have new bilateral assistance agreements been negotiated and entered into since such resumption?

No.

16. FAA Sec.620(u). What is the payment status of the country's U.N. obligations? If the country is in arrears, were such arrearages taken into account by the A.I.D. Administrator in determining the current A.I.D. Operational Year Budget?

Colombia is not delinquent.

17. FAA Sec.481. Has the government of recipient country failed to take adequate steps to prevent narcotic drugs and other controlled substances (as defined by the Comprehensive Drug Abuse Prevention and Control Act of 1970) produced or processed, in whole or in part, in such country, or transported through such country, from being sold illegally within the jurisdiction of such country to U.S. Government personnel or their dependents, or from entering the U.S. unlawfully?

The Government of Colombia has been made aware of the problem of narcotic drug trafficking and has initiated measures designed to inhibit such trafficking. The President has designated the Minister of Justice as overall coordinator. The Procurador General also has oversight responsibility through the Judicial Police. Seizures of narcotic drugs in the past twelve months have been substantially above earlier periods. The GOC has sponsored or participated in a number of inter-governmental, intragovernmental and public/private seminars, which have served to increase awareness generally and improve technical capacity of law enforcement officials. Staff of control agencies are being trained in narcotics interdiction. Assistance and advice of the USG in these respects has been solicited, provided and utilized.

18. FAA, 1973 Sec.29. If (a) military base is located in receipient country; and was constructed or is being maintained or operated with funds furnished by U.S., and (b) U.S. personnel carry out military operations from such base, has the President determined that the government of recipient country has authorized regular access to U.S., correspondents to such base?

N.A.

Military Expenditures

19. FAA Sec.620(s). What percentage of country budget is for military expenditures? How much of foreign exchange resources spent on military equipment? How much spent for the purchase of sophisticated weapons systems? (Consideration of these points is to be coordinated with the Bureau for Program and Policy Coordination, Regional Coordinators and Military Assistance Staff (PP/RC).

(a) In 1975, the Ministry of Defense will receive less than 10% of the national budget. Said Ministry's share of the national budget has been declining steadily for the past several years.

(b) Foreign Exchange Expenditures for Military Equipment.

In CY 1974 the GOC spent $17 million dollars on military "hardware".

(c) Foreign Exchange Expenditures for Sophisticated Weapons:

In CY 1974 there were no new commitments for Sophisticated Weapons.

CONDITIONS OF THE LOAN

General Soundness

20. FAA Sec.201(d). Information and conclusion on reasonableness and legality (under laws of country and the United States) of lending and relending terms of the loan.

The terms of the proposed loan are consistent with the laws of Colombia and the United States and are not excessive or unreasonable for the Borrower (See Section III).

21. FAA Sec.251(b)(2); Sec.251(e) Information and conclusion on activity's economic and technical soundness. If loan is not made pursuant to a multilateral plan, and the amount of the loan exceeds $100,000, has country submitted to A.I.D. and application for such funds together with assurances to indicate that funds will be used in an economically technically sound manner?

The project is economically and technically sound. The GOC has submitted an application for the proposed loan and the Mission has been provided sufficient information and assurances to indicate reasonably that the funds will be used in an economically and technically sound manner.

22. FAA Sec.251(b). Information and conclusion on capacity of the country to repay the loan, including reasonableness of repayment prospects.

The terms of the proposed loan are such that there are reasonable prospects for its repayment. (Section III)

23. FAA Sec.251(b). Information and conclusion on availability of financing from other free-world sources, including private sources within the United States.

The IBRD, IDB and Ex-Imbank have been advised of this proposed loan and have indicated that they are not interested in financing the program. (See Section III).

24. FAA. Sec.611(a)(1). Prior to signing of loan will there be (a) engineering, financial, and other plan necessary to carry out the assistance and (b) a reasonably firm estimate of the cost to the United States of the Assistance?

A) Yes.

B) Yes

25. FAA Sec.611(a)(2). If further legislative action is required within recipient country, what is basis for reasonable expectation that such action will be completed in time to permit orderly accomplishment of purpose of loan?

No further legislation is required except for the yearly Budget Law which is normally approved by the end of each CY. Based upon past performance, there are reasonable expectation that the necessary Budget Laws will be enacted and that the law or amendments thereto will contain the amounts scheduled to be contributed by the GOC.

26. FAA Sec.611(e). If loan is for Capital Assistance, and all U.S. assistance to project now exceeds $1 million, has Mission Director certified the country's capability effectively to maintain and utilize the project?

Yes. See Director's certificate.

Loan's Relationship to Achievement of Country and Regional Goals

27. FAA Sec. 207; Sec.251(a); Sec.113 Extent to which assistance reflects appropriate emphasis

on: (a) encouraging development of democratic, economic, political, and social institutions; (b) self-help in meeting the country's food needs; (c) improving availability of trained manpower in the country; (d) programs designed to meet the country's health needs; (e) other important areas of economic, political, and social development, including industry; free labor unions, cooperatives, and Voluntary Agencies; transportation and communication; planning and public administration; urban development, and modernization of existing laws; or (f) integrating women into the recipient country's national economy.

a) The development of the rural roads in Colombia is clearly a reflection of Colombia's determined emphasis on building economic, democratic and social institutions (See also Section IV).

b) This program will have a direct effect in meeting the country's food needs through improved access to markets.

c) Training of fisheries technicians is a component of the loan (See Section II).

d) Increased access to markets for farm produce / caused by the project will improve the general nutrition level by making available more farm produce.

e) Section III B of this paper covers this topic.

f) Section III E of this paper covers this topic.

28. FAA Sec.209. Is project susceptible of execution as part of regional project? If so why is project not so executed?

No.

29. FAA Sec.251(b)(3). Information and conclusion on activity's relationship to, and consistency with, other development activities, and its contribution to realizable long-range objectives.

The loan activities relate directly to and are consistent with other sectoral and specific development activities contained in the overall Colombia 74 Food and Nutrition Plan.

30. FAA Sec.251(b)(7). Information and conclusion on whether or not the activity to be financed will contribute to the achievement of self-sustaining growth.

See comment under Item 29 above.

31. FAA Sec.209; Sec.251(b)(8) Information and conclusion whether assistance will encourage regional development programs, and contribute to the economic and political integration of Latin America.

Loan has not direct bearing on achieving such integration.

32. FAA Sec.251(g); Sec.III. Information and conclusion on use of loan to assist in promoting the cooperative movement in Latin America.

N.A.

33. FAA Sec.251(h). Information and conclusion on whether the activity is consistent with the findings and recommendation of the Inter-American Committee for the Alliance for Progress in its annual review of national development activities.

This loan is consistent therewith.

34. FAA Sec.281(a). Describe extent to which the loan will contribute to the objective of assuring maximum participation in the task of economic development on the part of the people of the country, through the encouragement of democratic, private, and local governmental institutions.

Section III hereof outlines the expected impact of the program on the people of Colombia, and concludes that it will increase participation by the populace in the development process.

35. FAA Sec.281(b). Describe extent to which program recognizes the particular needs, desires, and capacities of the people of the country; utilizes the country's intellectual resources to encourage institutional development; and supports civic education and training in skills required for effective participation in governmental and political processes essential to self-government.

Section II A of this loan paper describes the need for assisting rural road development in Colombia. A portion of the funds made available under the loan will be used to train personnel concerned with management and planning, which will serve to encourage institutional development.

36. FAA Sec.601(a). Information and conclusions whether loan will encourage efforts of the country to (a) increase the flow of international trade; (b) foster private initiative and competition; (c) encourage development and use of cooperatives, credit unions, and savings and loan associations; (d) discourage monopolistic practices; (e) improve technical efficiency of industry, agriculture, and commerce and (f) strengthen free labor unions.

a) N.A.

b) The loan will foster private initiative and competition by improving among small farmers access to better markets.

c) N.A.

d) N.A.

e) One of the purposes of the loan is to strengthen the technical efficiency of the Caminos Vecinales.

f) N.A.

37. FAA Sec.619. If assistance is for newly independent country; is it furnished through multilateral organizations or plans to the maximum extent appropriate?

N.A.

Loan's Effect on U.S. and A.I.D. Program

38. FAA Sec.251(b)(4); Sec.102. Information and conclusion on possible effects of loan on U.S. economy, with special reference to areas of substantial labor surplus, and extent to which U.S. commodities and assistance are furnished in a manner consistent with improving the U.S. balance of payments position.

The Mission does not contemplate any adverse effect on U.S. economy.

39. FAA Sec.252(a). Total amount of money under loan which is going directly to private enterprise, is going to intermediate credit institutions or other borrowers for use by private enterprise, is being used to finance imports from private sources, or is otherwise being used to finance procurements from private sources.

None of the loan funds will go to private enterprise. Loan funds will be used to finance imports from U.S. sources.

40. FAA Sec.601(b). Information and conclusion on how the loan will encourage U.S. private trade and investment abroad and how it will encourage private U.S. participation in foreign assistance programs (including use of private trade channels and the services of U.S. private enterprise).

N.A.

41. FAA Sec.601(d). If a capital project, are engineering and professional services of U.S. firms and their affiliates used to the maximum extent consistent with the national interest?

Yes.

42. FAA Sec.602. Information and conclusions whether U.S. small business will participate equitably in the furnishing of goods and services financed by the loan

See Item 39 above

43. FAA Sec.620(h). Will the loan promote or assist the foreign aid projects or activities of the Communist-Bloc countries?

No.

44. FAA Sec.621. If technical Assistance is financed by the loan, information and conclusion whether such assistance will be furnished to the fullest extent practicable as good and professional and other services from private enterprise on a contract basis. If the facilities of other Federal agencies will be utilized, information and conclusion on whether they are particularly suitable, are not competitive with private enterprise, and can be made available without undue interference with domestic programs.

See Item 39 above.

Loan's Compliance with Specific Requirements

45. FAA Sec.110(a); Sec.208(e). Has the recipient country provided assurances that it will provide at least 25% of the costs of the program project, or activity with respect to which to Loan is to be made?

Yes. See Section III.

46. FAA Sec.112. Will loan be used to finance police training or related program in recipient country?

No.

47. FAA Sec.114. Will loan be used to pay for performance of abortions or to motivate or coerce persons to practice abortions?

No.

48. FAA Sec.201(d). Is interest rate of loan at least 2% per annum during grace period and at least 3% per annum thereafter?

Yes.

49. FAA Sec.604(a). Will all commodity Procurement financed under the loan be from the United States except an otherwise determined by the President?

Yes.

50. FAA Sec.604(b). What provision is made to prevent financing commodity procurement in bulk at prices higher than adjusted U.S. market price?

The Loan Agreement and Implementation Letters will so provide.

51. FAA Sec.604.(d). If the cooperating country discriminates against U.S. marine insurance companies, will loan agreement require that marine insurance be placed in the United States on commodities financed by the loan?

Goods to be financed under the proposed loan will be purchased on a CIF basis with the responsibility for the purchase of marine insurance being left to the exporter. The loan agreement will contain such a clause.

52. FAA Sec.604(e). If offshore procurement of agricultural commodity or product is to be financed, is there provision against such procurement when the domestic price of such commodity is less than parity?

N.A.

53. FAA Sec.604(f). If loan finances a commodity import program, will arrangements be made for supplier certification to A.I.D. and A.I.D. approval of commodity as elegible and suitable?

N.A.

54. FAA Sec.608(a). Information on measures to be taken to utilize U.S. Government excess personal property in lieu of the procurement or new items.

The loan agreement will contain a provision enjoining Borrower to use U.S. excess property under appropriate circumstances.

55. FAA Sec.611(b); App-Sec.101. If loan finances water or water-related land resource construction project or program, is there a benefit-cost computation made, insofar as practicable, in accordance with the procedures set forth in the Memorandum of the President dated May 15, 1962?

N.A.

56. FAA Sec.611(c). If contracts for construction are to be financed, what provision will be made that they be let on a competitive basis to maximum extent practicable?

Colombian law so requires.

57. FAA Sec.612(b); Sec.636(h). Describe steps taken to assure that, to the maximum extent possible, the country is contributing local currencies to meet the cost of contractual and other services, and foreign currencies owned by the United States are utilized to meet the cost of contractual and other services.

N. A.

58. App.Sec. 113. Will any of loan funds be used to acquire currency of recipient country from non-U.S. Treasury sources when excess currency of that country is on deposit in U.S. Treasury?

No.

59. FAA Sec.612(d). Does the United States own excess foreign currency and, if so, what arrangements have been made for its release?

No.

60. FAA Sec.620(g). What provision is there against use of subject assistance to compensate owners for expropriated or nationalized property?

Loan Agreement will not permit such use.

61. FAA Sec.620(k). If construction of productive enterprise, will aggregate value of assistance to be furnished by the United States exceed $100 million?

No.

62. FAA Sec.636(i). Will any loan funds be used to finance purchase, long-term lease, or exchange of motor vehicle manufactured outside the United States, or any guaranty of such a transaction?

No.

63. App.Sec.103. Will any loan funds be used to pay pensions, etc., for military personnel?

No.

64. App.Sec. 105. If loan is for capital project, is there provision for A.I.D. approval of all contractors and contract terms?

Yes.

65. App. Sec. 107. Will any loan funds be used to pay UN assessments?

No.

66. App. Sec.109. Compliance with regulations on employment of U.S. and local personnel (A.I.D.) Regulation 7).

N.A.

67. App. Sec.110. Will any of loan funds be used to carry out provisions of FAA Secs.209(d) and 251(h)?

Such is not anticipated.

68. App. Sec.114. Describe how the Committee on Appropriations of The Senate and House have been or will be notified concerning the activity, program, project country, or other operation to be financed by the Loan.

They will be notified by letter prior to authorization.

69. App. Sec.601. Will any loan funds be used for publicity or propaganda purposes within the United States not authorized by the Congress?

No.

70. MMA Sec.901(b); FAA Sec.640(c)
(a) Compliance with requirement that at least 50 per centum of the gross tonnage of commodities (computed separately for dry bulk carriers, dry cargo liners, and tankers) financed with funds made available under this loan shall be

transported on privately owned U.S. flag commercial vessels to the extent that such vessels are available at fair and reasonable rates.

Loan agreement will contain a provision in compliance with this requirement.

(b) Will grant be made to loan recipient to pay all or any portion of such differential as may exist between U.S. and foreign-flag vessel rates?

No.

CERTIFICATION PURSUANT TO SECTION 611 (e) OF THE

FOREIGN ASSISTANCE ACT OF 1961, AS AMENDED

SUBJECT: COLOMBIA - Capital Assistance - Small Farmer Market Access

Having taken into account, among other things, the maintenance and utilization of projects in Colombia previously financed or assisted by the United States, I certify hereby that in my judgment Colombia has the financial capability and the human resources (when supplemented by the specific technical assistance to be required under the proposed loan) to maintain and utilize effectively the proposed Small Farmer Market Access Loan.

This judgment is based primarily on the facts developed in the Project Paper for the proposed loan of $5.0 million which discusses in detail the capabilities of the Caminos Vecinales and Government of Colombia and finds them in possession of adequate financial and human resource capability to effectively utilize and maintain the project.

Philip R. Schwab

August 30, 1975

DRAFT LOAN AUTHORIZATION

Provided from: FAA Section 103 ("Food and Nutrition")
COLOMBIA : Small Farmer Market Access

Pursuant to the authority vested in the Deputy U.S. Coordinator, Alliance for Progress by the Foreign Assistance Act of 1961, as amended, and the delegations of authority issued thereunder, I hereby authorize the establishment of a Loan ("Loan") pursuant to Section 103 of said Act to the Fondo Nacional de Caminos Vecinales ("Borrower") of not to exceed five million United States dollars ($5,000,000) to assist in financing the United States dollar and local currency costs of the Borrower's program to construct farmer access roads.

The Loan shall be subject to the following terms and conditions:

1. Interest and Terms of Repayment: Borrower shall repay the Loan to A.I.D. in United States dollars within forty (40) years from the first disbursement under the Loan, including a grace period of not to exceed ten (10) years. Borrower shall pay to A.I.D. in United States dollars, on the outstanding balance of the Loan, interest at the rate of two percent (2%) per annum during the grace period, and three percent (3%) per annum thereafter.

2. Other Terms and Conditions:

(a) Goods and services (except ocean shipping) financed under the Loan shall have their source and origin in Colombia or in countries included in Code 941 of the A.I.D. Geographic Code Book. Marine insurance financed under the Loan shall be procured by the exporter on a CIF basis and placed in any country included in Code 935 of the A.I.D. Geographic Code Book. Ocean shipping financed under the Loan shall be procured in any country included in A.I.D. Geographic Code 941.

(b) United States dollars utilized under the Loan to finance local currency costs shall be made available pursuant to procedures satisfactory to A.I.D.

(c) The Government of Colombia (GOC) shall guaranty the Loan.

(d) Conditions Precedent to Initial Disbursement

Caminos Vecinales with USAID approval will have contracted for or already received technical assistance in the preparation of a sub-project selection methodology.

(e) Conditions Precedent for Road Construction

Caminos Vecinales will submit to USAID for approval detailed sub-project criteria and the methodology o sub-project analysis which would be utilized in the selection of all Pico y Pala roads in this program.

(f) Special Covenants

a. Caminos Vecinales will covenant to have counterpart funds available as needed for road construction and maintenance purposes as indicated in the Project Description annexed to the Loan Agreement.

b. Caminos Vecinales will covenant to take such necessary actions to implement institutional improvements as indicated in the Project Description annexed to the Loan Agreement.

(g) The Loan shall be subject to such other terms and conditions as A.I.D. may deem advisable.

UNOFFICIAL TRANSLATION

LOAN APPLICATION

Sept. 1, 1975
DG #355

Mr. Philip R. Schwab,
Acting Director
Agency for International Development
Bogota

Dear Mr. Schwab:

In our letter 154 1.B.12, signed by our previous general director, we requested to AID a loan on the amount of US$4,500,000 with counterpart resources of US$6,000,000 for the continuation of the Caminos Vecinales Pick and Shovel Program.

After a careful review about needs and costs of the program made jointly with AID and the National Planning Department, it was concluded that these amounts were insufficient.

On this regard, I am kindly requesting the reconsideration of the amounts and like to obtain your help in making the loan for an amount of five million dollars from AID, US$4,700,000 will be used for road construction and three hundred thousand for technical assistance. The counterpart, in the amount of seven million dollars, will be assigned in the amounts of six million for construction and one million for maintenance.

Thank you very much for your collaboration.

Jaime Alberto Garcia Rivera
General Director
Fondo Nacional de Caminos Vecinales

DRAFT DESCRIPTION OF PROJECT TO BE ANNEXED TO LOAN AGREEMENT

Goal

The program goal of this project is to improve the level of welfare among rural poor by stimulating the agricultural development of those rural areas of Colombia which do not presently have ready access to external markets and services. A Sub-goal of the program is to improve the nutritional well-being of the lower income groups of the Colombian population by helping to satisfy their basic dietary requirements through increased availability of basic foods.

Purposes

The purposes of the project in declining order of importance are to stimulate increased agricultural production among small, heretofore isolated farmers, principally by improving their access to markets and reducing transport costs; to open to those same small isolated farmers the services of governmental and private sector institutions, particularly agriculture, education and health; to introduce institutional improvements on the agency implementing the project, Caminos Vecinales, particularly in project selection and upgrading of tehcnical personnel; and to supplement the incomes of underemployed agricultural workers, providing them with temporary employment.

Planned Accomplishments

Approximately 890 kms of labor intensive feeder roads are to be constructed including 180 kms. constructed and 29 roads initiated in 1976; 360 kms. constructed, 48 roads initiated, and 35 completed in 1977; 350 kms. constructed, 34 roads initiated and 48 roads completed in 1978.

A Selection and Evaluation Office will be established to use road selection and evaluation methodologies to promote achievement of the agriculture and social objectives of the project. Design and construction processes are to be improved in the Pico y Pala program, and environmental effects of road construction will be considered in the design and construction process. In addition, it is expected that cash flows to the small farmer "contractor" will improve along with complementary budgeting and accounting functions.

In addition, Caminos Vecinales will assume the responsibility for maintenance of Pico y Pala roads and will explore ways to incorporate community participation in the maintenance service.

PLANNED INPUTS

The use and source of inputs for this Project are as follows:

	SOURCE (US$000)					
	AID - CY			AID - CY		
Use	76	77	78	76	77	78
Road Construction Funds	175	2,700	1,825	1,500	2,000	2,500
Sub-Project Selection	14	5	6			
Sub-Project Evaluation	41	29	30			
Design and Construction Capacity	10	40	38			
Consideration of Environmental Factors	15	30	15			
Cash Flow, Budgetary and Cost Accounting	12	--	--			
Evaluation of Maintenance Capacity	15	--	--			
Maintenance Funds	--	--	--	233	333	434
	282	2,804	1,914	1,733	2,333	2,934
TOTAL		5,000			7,000	

ANNEX II
Exhibit 1

ORIGINAL PICO Y PALA REQUEST

	Length of Construction (km)	Total Investment	CONSTRUCTION PROGRAM 1975 km.	1975 Investment	1976 km.	1976 Investment	1977 km.	1977 Investment	1978 km.	1978 Investment
Total	2.285.5	1.006.120	250.1	91.500	401.4	157.040	764.0	335.750	867.0	421.830
Contingencies		15.780				1.360		4.250		10.170
Overall Total	2.285.5	1.021.900 P.	250.1	91.500 P.	401.4	158.400 P.	764.0	340.000 P.	867.0	432.000 P.
US$	--	30.000		3.050		4.950		10.000		12.000

SUMMARY OF SMALL FARM CONCENTRATION AND CULTIVATION STATUS RELATED TO FEEDER ROAD PROGRAM.

GROUP A 3/ DEPARTMENTS	Small Farm Size (No.) 1/ Under 10 Has.	10-20 Has.	Under 20 Has.	Average 2/ Rural Family Size (No.)	Small Farms Population	Total Rural Population
Atlántico	1,467	265	1,732	6.13	10,653	[illegible]
Bolívar	3,522	663	4,185	6.63	27,762	358.392
Cesar	3,820	849	4,669	5.83	27,213	169.851
Córdoba	1,689	223	1,912	5.98	11,436	37.819
Chocó						32.[illegible]
Guajira	715	376	1,091	6.59	7,194	45.[illegible]
Magdalena	1,780	195	1,975	7.58	14,968	35.164
Sucre	1,640	206	1,846	6.43	11,870	44.881
	14,633	2,777	17,410	6.38	111,096	753.491
GROUP B						
Antioquia	8,653	892	9,545	6.71	64,007	164.141
Boyacá	8,094	830	8,924	5.26	46,929	61.470
Caldas	16,759	1,972	18,731	6.47	121,302	219.832
Cundinamarca	13,930	978	14,908	4.93	73,484	112.591
Norte de Santander	4,064	1,748	5,812	5.70	33,133	349.938
Risaralda	8,572	1,137	9,709	6.60	64,053	304.179
Santander	8,270	1,333	9,603	5.37	51,618	66.724
Cauca	19,257	1,891	21,148	5.48	115,980	148.163
Quindío	411	259	670	7.15	4,792	21.106
Huila	4,271	919	5,190	6.2	32,157	173.441
Valle	4,745	1,130	5,875	6.6	38,751	89.412
Tolima	4,006	1,253	5,259	6.4	33,478	94.918
Nariño	7,579	839	8,418	6.4	52,521	102.544
Sub-Total	108,611	15,181	123,792	5.91	732,205	1,918.749
TOTAL	123,244	17,958	141,202	5.97	843,301	2,674.241

1/ Censo Agropecuario. 1970. DANE (Minag.)

2/ XIV Censo Nacional de Población y III de Vivienda 1973. Provisional(DANE)

3/ Pick and Shovel Loan Application. 1975. Minobras-Fondo Nacional de Caminos Vecinales.

Feeder Access Roads (Km.)			Small Farms Area (Has.)				Farms Area (Ha.)		Fallow Area (%)	
Total Planned	Already Completed	To be Completed	Cultivated	Fallow	Total	Total Cultivated	Fallow	Total	Small Farms	Total Farms
40		40	4,957	1,449	8,286	15,414	16,815	81,230	17	21
41	.5	40.5	7,027	5,274	17,549	22,543	54,046	186,867	30	29
24		24	7,272	3,471	22,398	94,592	124,785	708,927	15	18
55		55	1,654	960	5,447	5,224	50,906	286,862	18	18
25.5	8	17.5								
31	1.5	29.5	2,088	1,156	7,851	19,541	19,426	154,662	15	13
26		26	5,800	1,278	10,313	12,772	38,874	257,390	12	15
24		24	3,549	1,975	6,975	5,878	11,557	65,423	28	18
286.5	10	256.5	32,347	15,563	78,819	175,964	318,418	1,741,367	20	18
24	9.2	14.8	18,919	3,754	34,373	61,460	73,326	402,896	11	18
63.4	39.4	24	12,516	4,859	38,958	18,620	13,720	77,985	15	18
94	20.2	73.8	43,046	6,091	69,138	73,410	24,095	278,055	9	9
54.5	39.4	15.1	22,182	8,061	47,938	30,632	6,900	86,288	17	8
122.1	22.1	100	15,326	6,982	38,825	80,596	101,255	442,550	18	23
68.4	23.8	44.6	29,557	1,726	41,183	63,762	8,729	169,079	4	5
40.7	5.1	35.6	16,406	4,175	43,646	24,493	15,586	127,432	10	12
95	47	48	35,312	14,187	77,568	61,805	51,883	264,276	18	20
15	-o-	15	4,022	433	5,861	13,482	5,630	44,052	8	13
90	18	72	10,098	2,098	24,874	76,085	12,715	202,527	9	6
39	19.9	19.1	18,440	3,021	32,176	49,237	17,929	150,958	9	12
80	13.2	66.8	15,334	8,417	38,183	47,960	47,880	325,368	24	15
51	12.8	38.2	15,320	3,152	33,503	31,764	10,326	93,880	11	11
387.1	270.1	567.0	256,478	67,356	515,858	636,806	388,974	2,665,326	13	15
1173.6	280.1	823.5	288,825	82,919	594,675	812,770	706,392	4,406,693	14%	16%

SMALL FARMS CONCENTRATION AND PRESENT CULTIVATION STATUS BY MUNICIPIOS RELATED TO FEEDEN ROADS PROGRAM

MUNICIPALITY	Small Farms by Size No. Under 10 has.	10 - 20 has.	Under 20 has.	Average Rural Family Size (No.)	Small Farm Population (No.)	Total Human Population (No.)
ANTIOQUIA						
Andes (Verdún-Gibraltar)	1.838	268	2.106	6.82	14.363	35.009
Bolívar (Alto Mantequilla-Pte. Roto)	1.015	187	1.202	7.67	9.219	27.347
Heliconia (Alto del Corral-Crucero)	875	61	936	6.37	5.962	7.670
• Marinilla (Marinilla-MontaRitas)	2.206	100	2.306	6.58	15.173	22.526
• Guarne (Guarne-Juan XXIII)	1.767	93	1.860	6.50	12.090	16.205
Cáceres (Tarazá)	199	69	268	6.29	1.686	22.380
Caucasia (Nechi)	753	114	867	6.36	5.514	32.883
	8.653	892	9.545	6.71	64.007	164.020
BOYACA						
• Buenavista (La Grande-El Fical)	751	94	845	5.32	4.495	5.597
• Moniquirá (Moniquirá-El Naranjal)	3.181	195	3.376	6.35	21.438	22.863
• Zetaquirá (Zetaquirá-Hormigas)	816	85	910	5.48	4.937	6.144
• Páez (Via Páez-La Cumbre)	457	202	659	5.65	3.723	5.030
• Pauna (Pauna-Otro Mundo)	1.594	168	1.762	3.20	5.638	11.820
• Soatá (Onzaga-Soatá)	1.295	86	1.381	4.85	6.698	9.926
	8.094	830	8.924	5.26	46.929	61.400
CALDAS						
Samaná (Berlin-San Diego)	1.620	540	2.160	6.76	14.602	30.206
Riosucio (San Lorenzo-Pasmi)	4.678	170	4.848	6.39	30.979	34.892
Pensilvania (Guacas-Buenos Aires) y (Pensilvania-Pte. Linda)	1.840	423	2.263	6.35	14.370	28.656
Risaralda (Quiebra-El Placer)	998	130	1.128	7.45	8.404	18.127
Anserma (La Rica-Risaralda)	1.523	168	1.691	6.33	10.704	29.444
Aguadas (Aguadas-Rio Arriba)	2.450	289	2.739	6.17	16.900	31.420
Neira (La Esperanza-Morrón-S. Pablo)	1.225	151	1.376	7.12	9.797	24.326

Feeder Access Road Length (Km.)			Small Farms Area (Has.)			Total Farms Area (Has.)			Fallow Area %	
Total Planned	Already Completed	To be Completed	Cultivated	Fallow	Total	Cultivated	Fallow	Total	Small Farms	Total Farms
5.0	4.0	1.0	5.834	1.032	8.316	11.926	3.679	26.421	12	14
6.0	1.6	4.4	4.188	242	5.707	11.211	1.286	23.494	4	5
6.0	0.6	5.4	1.853	218	2.560	4.319	2.141	10.585	8	20
3.0	3.0		3.076	178	6.965	16.848	3.518	32.138	2	11
4.0		4.0	1.883	222	5.695	2.848	338	11.036	4	3
8.0		8.0	1.053	399	1.815	9.022	24.520	174.243	22	14
12.0		12.0	1.082	1.463	3.315	5.286	37.844	124.979	44	30
24.0	9.2	14.8	18.919	3.754	34.373	61.460	73.326	402.896	11	18
7.0		7.0	1.377	138	3.606	1.678	208	4.957	4	4
6.4	6.4		4.063	436	9.077	5.235	788	13.940	5	6
16.0	13.0	3.0	923	459	3.746	1.817	5.913	11.756	12	50
16.0	9.0	7.0	801	400	4.877	1.726	1.935	21.251	8	9
18.0	11.0	7.0	3.079	1.110	7.399	5.654	3.953	20.224	15	20
12.0		12.0	2.213	2.316	4.253	2.510	923	5.857	54	16
63.4	39.4	24.0	12.516	4.859	32.958	18.620	13.720	77.985	15	18
17.0	9.0	8.0	8.113	3.117	13.953	12.854	13.190	61.434	22	21
5.0	3.0	2.0	5.562	721	8.720	7.474	3.921	27.455	8	14
19.0	2.0	17.0	6.348	490	12.379	11.788	1.590	50.070	4	3
11.0	2.0	9.0	3.774	192	4.989	7.009	400	12.544	4	3
10.0	1.2	8.8	4.218	527	6.461	7.226	894	16.645	8	5
14.0	0.2	13.8	6.590	612	10.740	12.420	2.215	54.676	6	4
7.0	0.2	6.8	3.615	142	5.290	8.284	1.350	34.752	3	4

MUNICIPALITIES	Small Farms by Size (No.) Under 10 Has.	10-20 Has.	Under 20 Has.	Average Rural Family Size (No.)	Small Farm Population	Total Human Population (No.)
CALDAS						
Marmato (Cabras	547	15	562	6.03	3,389	4,661
Supía (La Miel)	1,878	86	1,964	6.19	12,157	17,100
	16,759	1,972	18,731	6.47	121,302	218,832
CUNDINAMARCA						
•Caqueza(C.V.Centro-Páramo)(Esbuardo-Carmén-Pauta)(Charco-Mercadillo-Batea)	1,792	26	1,818	5.72	10.399	14,280
•Tibacuy(Alto de la Cruz-Batea)	646	62	708	5.62	3.979	4,518
Gachetá(G.Muchindote)	2.814	103	2,917	3.91	11.405	13.212
•La Palma(L.P.Topaipí-El Naranjal)	2,138	151	2.289	5.06	11.582	14.750
Topaipí (")	1.353	142	1,495	4.47	6.683	7.119
•Sasaima(S.El Limonal-La Vega)	1.160	110	1.270	4.30	5.461	5.491
•La Vega (")	1,141	174	1.315	5.44	7.154	7.530
•Fusa(Florencia-Mogambo-El Palmar)(Gravio-Horizonte-Sta. Lucía)	2,006	144	2,150	5.43	11,675	40,042
•Alban(La Ceibita-San José-T.Naimal)	880	66	946	5.44	5,146	5,648
	13,930	978	14,908	4.93	73,484	112,590
NORTE DE SANTANDER						
Convención(C.Soledad)	607	372	979	5.91	5,786	16,325
Toledo(T.Román-Irma)	772	207	979	5.93	5,805	16,021
Gramalote(G.El Tumbador)	570	101	671	6.67	4,476	8,370
Cúcuta(Fibrí-Las Mercedes)	432	236	668	5.85	3,908	269,565
Cáchira(La Carrera-Los Mangos)	711	330	1.041	6.04	6,288	18,022
El Carmén (Trocha)	413	249	662	2.92	1.933	10,801
Teorema(Catatumbo)	559	253	812	6.08	4,937	10,834
	4,064	1,748	5,812	5.70	33,133	349,936
RISARALDA						
Quinchía (C.Sta.Helena)	2,654	124	2,778	6.16	17,112	20,314
Santuario(T.P.Vano-Calichal)	455	158	613	8.84	5,459	16,132
Marselle(AltoCama-Náptles-Corozal)	840	172	1,012	6.82	6,902	14,466
Pereira(La Laguna-Tocui)	2,613	333	2,946	6.28	18,501	210,543

Feeder Access Road			Small Farms Area (Has.)			Total Farms Area (Has.)			Fallow Small Farms	Area(%) Total Farms
Total Planned	Already Completed	To be Completed	Cultivated	Fallow	Total	Cultivated	Fallow	Total		
6.0	0.1	5.9	842	70	1,308	1,210	113	3,224	5	4
6.0	0.1	5.9	3,984	220	5,298	5,145	422	17,255	4	2
94.0	20.2	73.8	43,046	6,091	69,138	73,410	24,095	278,185	9	9
18.0	16.7	1.3	2,292	103	3,779	2,399	175	4,200	3	3
4.5	3.6	0.9	1,568	121	3,037	1,954	165	5,813	4	3
11.0	7.6	3.4	2,155	197	7,601	5,610	200	11,486	3	2
5.0	3.5	1.5	4,115	1,128	7,455	5,264	2,238	12,300	15	18
5.0	3.5	1.5	2,629	507	5,823	3,260	863	9,853	9	10
5.0	4.0	1.0	2,277	5,390	4,780	2,889	1,057	9,920		12
5.0	4.0	1.0	3,076	241	6,451	4,150	467	12,131	4	4
5.0	4.0	1.0	2,887	306	7,009	3,515	1,690	17,282	4	10
6.0	---	6.0	1,183	68	2,003	1,591	112	5,333	3	2
54.5	39.4	15.1	22,182	8,061	47,938	30,632	6,900	86,288	17	8
8.5	6.0	2.5	4,229	1,160	7,413	9,949	3,948	22,816	16	17
25.0	8.3	16.7	1,913	773	5,260	23,033	20,794	125,483	15	17
15.0	1.2	13.8	1,818	294	3,340	3,503	842	7,801	9	11
12.0	---	12.0	1,953	845	4,685	21,280	53,293	179,794	15	30
6.6	0.6	6.0	2,287	1,625	7,099	11,446	11,725	52,817	23	22
55.0	6.0	49.0	1,774	827	5,152	6,988	5,396	31,406	16	17
55.0	6.0	49.0	1,352	1,458	5,576	7,377	5,357	22,643	25	24
122.1	22.1	100.0	15,326	6,982	38,525	83,596	101,255	442,550	18	23
13.0	11.0	2.0	5,883	508	7,880	9,951	1,055	17,308	6	[illegible]
14.0	9.4	4.6	3,103	261	4,231	8,132	1,422	13,805	6	10
9.0	0.9	8.1	3,697	395	5,179	8,135	940	17,111	8	5
13.0	0.5	12.5	9,448	328	12,349	22,464	1,062	53,724	3	2

MUNICIPALITY	Under 10 Has.	10-20 Has.	Under 20 Has.	Average Rural Family Size (No.)	Small Farm Population (No.)	Total Human Population (No.)
RISARALDA						
Santa Rosa de Cabal(El Manzanillo-S.Domingo)(C.Alegrito-Colmenas)(L.Argentina-El Dinde-El Silencio)	2,010	350	2,360	6.83	16,119	42,717
	8,572	1,137	9,709	6.60	64,053	304,173
SANTANDER						
Málaga (M. Guásimo)	1.001	87	1.088	5.46	5,940	14.972
Molagavita (M.Laguna Ortices)	1.564	90	1.654	4.78	7,906	7,968
San Andrés (Laguna Ortices)	2.291	375	2.666	5.54	14,769	14,906
La Paz (La Paz-Sta Helena)	1.000	207	1,207	5.61	6,771	7,763
El Guacamayo (Sta Helena)	727	210	937	5.61	5,257	6,791
Onzaga (O-Soatá)	1.044	285	1,329	5.45	7,243	9,663
Contratación (C.El Guaramazo)	643	79	722	5.17	3,732	4,661
	8.270	1.333	9.603	5.37	51.618	66,724

Feeder Access Road Length (Km.)			Small Farm Area (Has.)			Total	Farms Area (Ha.)		Fallow Area (%	
Total Planned	Already Completed	To be Constructed	Cultivated	Fallow	Total	Cultivated	Fallow	Total	Small Farms	Total Farms
19.4	2.0	17.4	7,426	234	11,512	15,080	4,250	67,431	2	6
68.4	23.8	44.6	29,557	1,726	41,153	63,762	8,729	169,079	4	5
6.6	3.0	3.6	2,448	89	4,552	2,708	94	5,485	2	8
13.6	2.0	11.6	2,826	352	5,553	3,197	406	7,352	6	6
13.6	2.0	11.6	5,247	316	12,317	6,954	846	21,720	3	4
			1,373	983	6,007	2,875	3,443	18,528	16	18
			1,273	1,471	5,334	2,572	5,948	23,261	28	26
12.0		12.0	2,342	713	7,379	4,995	4,386	45,306	10	10
8.5	0.1	8.4	897	249	2,504	1,192	463	5,780	10	8
40.7	5.1	35.6	16,406	4.175	43,646	24,493	15,586	127,432	10	12

SMALL FARMS CONCENTRATION AND PRESENT CULTIVATION STATUS BY MUNICIPALITIES RELATED TO FEEDER ROADS PROGRAM

MUNICIPALITY	Small Farms by Size (No.) Under 10 has.	10 - 20 has.	Under 20 has.	Average Rural Family Size (No.)	Small Farm Population (No.)	Total Human Population (No.)
CAUCA						
• Silvia (Silvia-Pte. Real-La Campana)	2.484	233	2.717	5.42	14.726	6.874
• Sant. (Tres Quebradas-Guaitalá)	2.782	237	3.019	5.84	17.631	34.011
• Corinto (Quebraditas-Media Naranja)	552	112	664	4.03	2.676	12.221
• Bolívar (San Juan-Granadillos)	6.743	458	7.201	5.49	39.533	42.681
• Sta. Rosa (Sta. Rosa-Mota)	312	94	406	5.98	2.428	5.475
• Inza (Inza-Turminá)	1.810	262	2.072	5.09	10.546	11.351
• Mercaderes (Florencia-Esmeralda)	2.418	362	2.780	5.43	15.095	21.191
• Timbio (Alto San José-Pte. Santander)	2.156	133	2.289	5.83	13.345	14.359
	19.257	1.891	21.148	5.48	115.980	148.163
QUINDIO						
Pijao (Calle Larga-El Bosque)	136	110	246	7.07	1.739	8.403
Génova (La Culebrera-Monserrate)	275	149	424	7.20	3.053	11.705
	411	259	670	7.15	4.792	20.108
HUILA						
Garzón (El Recreo-San Guillermo)	1.669	356	2.025	6.08	12.312	28.642
Rivera (Rivera-Siberia)	863	129	992	6.03	5.982	8.269
Algeciras (El Paraíso-Balsillas)	710	242	952	6.61	6.293	15.098
Neiva (Pueblitos-Galicia-Begonias-Trocha)						
	4.271	919	5.190	6.2	32.157	173.441
VALLE						
El Aguila (Vergel-Guayacana-El Aguila)	515	164	679	6.82	4.631	10.581
El Cairo (El Cairo-El Brillante)	560	181	741	6.83	5.061	14.459
Ulloa (Ulloa-Chapinero-El Placer)	397	36	433	6.68	2.892	5.569
Trujillo (Venecia-Cristales)	454	245	699	6.73	4.704	22.272
Dagua (El Palmar-Centella)	2.221	356	2.577	5.24	13.503	24.536
Versalles (Versalles-Costa Rica-La Guaira)	598	148	746	10.67	7.960	11.995
	4.745	1.130	5.875	6.6	38.751	89.412

Feeder Access Road Length (Km.)			Small Farms Area (Has.)			Total Farms Area (Has.)			Fallow Area %	
Total Planned	Already Completed	To be Completed	Cultivated	Fallow	Total	Cultivated	Fallow	Total	Small Farms	Total Farms
17.5	10.5	7.0	3.375	1.584	10.024	4.823	3.695	28.989	16	13
9	4.5	4.5	5.186	1.776	9.905	10.441	5.487	38.338	18	14
6	3	3	2.048	1.436	3.685	4.111	2.946	14.021	39	21
11	3.5	7.5	10.224	2.880	22.593	18.457	7.018	39.922	13	19
8.5	8.5		388	873	4.378	1.559	14.660	56.863	20	26
10	6.5	3.5	3.232	2.572	8.642	4.880	6.162	23.758	30	26
18	6.5	11.5	7.614	2.164	11.846	13.779	10.550	47.985	18	22
15	4	11	3.245	902	6.495	3.755	1.365	14.405	14	9
95	47	48	35.312	14.187	77.568	61.805	51.883	264.276	18	20
7		7	1.724	32	2.160	6.536	913	21.418	1	4
8		8	2.298	401	3.430	6.946	4.717	22.634	11	20
15		15	4.022	433	5.561	13.482	5.630	44.052	8	13
15	4	11	3.382	894	10.034	6.324	2.006	38.540	9	5
15	3	12	1.995	353	3.989	4.582	1.764	20.642	9	9
15	1	14	2.750	291	5.619	6.608	2.517	45.373	6	5
45	10	35	1.871	560	5.032	8.571	6.428	97.972	11	6
90	18	72	10.098	2.098	24.674	26.085	12.715	202.527	9	6
6.6	5	1.6	2.677	109	4.340	6.474	210	14.045	2	1
12	6	6	2.798	305	4.743	7.887	1.265	21.423	6	6
6	3	3	1.303	44	1.632	2.810	120	4.744	2	2
3.4	3.4		3.480	200	5.564	7.549	1.071	25.506	4	4
5	2.5	2.5	5.480	2.028	11.676	18.013	12.108	66.106	17	18
6		6	2.702	335	4.221	6.504	3.155	19.134	8	16
39	19.9	19.1	18.440	3.021	32.176	49.237	17.929	150.958	9	12

TOLIMA						
• Anzoátegui (Betulia-Sta. Bárbara-Anzoátegui-El Palomar)	560	198	758	6.10	4.624	9.851
Ortega (Chaparral Herrera-Maco-Los Guayabos)	2.259	438	2.697	6.10	16.452	31.367
Rovira (Rovira-Luisa-El Guadual)	980	338	1.318	6.57	8.659	21.883
Planadas (Planadas-Bilbao-La Herrera)	405	256	661	6.73	4.449	16.671
Planadas (Límites del Valle-La Herrera)	405	256	661	6.73	4.449	16.671
Rio Blanco (Rio Blanco-Gaitán)	362	221	583	6.72	3.918	15.316
	4.006	1.253	5.259	6.4	33.478	94.818
NARIÑO						
• Tambo (San Francisco)	1.742	117	1.859	9.2	17.103	26.200
• Tangua (Tatialquer-Guayabal)	1.063	110	1.173	5.05	5.924	8.447
• Colon (Berruecos-Sta. Rosa)	787	128	915	5.40	4.941	6.699
• Ipiales (Yaramal-Floresta)	3.196	230	3.426	5.30	18.158	49.775
• Rosario (Lucha-Leyva)	791	254	1.045	6.12	6.395	11.423
	7.579	839	8.418	6.24	52.521	102.544

• Road in areas of the Integrated Rural Development Project

17	8.5	5.5	2.521	4.510	4.862	5.910	2.849	36.326	92	8
15	3	12	5.751	1.219	12.865	10.539	4.742	49.333	10	10
12	1	11	3.313	974	7.683	13.172	9.833	123.246	13	9
21	.7	20.3	2.012	1.127	5.297	6.802	17.587	50.504	21	35
15		15	1.737	587	4.476	11.207	12.869	65.959	13	20
80	15.2	65.5	15.334	8.417	35.183	47.968	47.880	325.368	24	15
7	3	4	3.873	282	7.487	6.074	560	15.598	4	4
7	3	4	2.451	750	4.513	3.276	900	7.504	17	12
12	5.6	6.4	2.581	299	4.570	3.102	361	5.935	7	6
8	1.5	6.5	4.021	772	10.644	13.583	1.284	37.796	7	4
17	0.2	16.8	2.394	1.449	6.289	5.729	7.221	27.047	23	27
51	40.3	37.70	15.320	3.552	33.503	31.764	10.326	93.880	11	11

SMALL FARMS CONCENTRATION AND PRESENT CULTIVATION STATUS BY MUNICIPALITIES RELATED TO FEEDER ROADS PROGRAM (• Indicates DR/area)

MUNICIPALITY	Small Farms by Size (No.) 1/ Under 10 Has.	10 - 20 Has.	Under 20 Has.	Average 2/ Rural Family Size (No.)	Small Farms Population (No.)	Total Human 2/ Population (No.)
ATLANTICO						
Osiacurí	44	26	70	5.87	411	4,382
Piojó (Aguas Vivas)	234	63	297	6.40	1,901	3,282
Repelón(Repelón-Tablas-Cien Pesos)	925	121	1.046	6.23	6,517	12,943
Galapa-	88	8	96	5.39	517	9,203
Tubará	176	47	223	5.86	1,307	5,198
	1,467	265	1,732	6.15	10,653	35,008
BOLIVAR						
Pinillos (Sta. Rosa)	919	218	1,137	6.35	7,220	19,930
Achi (Canelos-Buenavista)	1,635	281	1,916	6.84	13,105	22,357
Cartagena(Bayunca-Arroyo de Piedra)	968	164	1,132	6.57	7,437	313.305
	3,522	663	4,185	6.63	27,762	355,592
CESAR						
Robles La Paz(San José de Oriente La Laguna)	213	104	317	6.39	2,026	22,392
Curemaná-Curim-La Sierra)	1,194	144	1,338	5.45	7,292	13,965
Chimichagua(Bridge Astrea)	1,644	148	1,792	6.14	11,003	23,456
Valledupar (Bridge Salguero)	769	453	1,222	5.64	6,892	110,038
	3,820	849	4,669	5.83	27,213	169,851
CORDOBA						
Montelibano (San Francisco-Tierra Adentro)(Ure-Taraza-La Rica-Juan José)	876	126	1,002	5.80	5,812	29,485
Chima (Carolina-La Barra)	813	97	910	6.18	5,624	8.324
	1,689	223	1,912	5.98	11,436	37,809
CHOCO						
Bagadó				6.06		6,444
Tadó (Certeguí)				5.02		14,564
Acandí (Titumate-Balboa)				5.57		11.002
						32,010

Pre-Access Roads (Km.) 3/			Small Farms Area (Has.) 1/			Total Farms Area (Has) 1/			Fallow Area (%)	
Total Done	Already Completed	To be Completed	Cultivated	Fallow	Total	Cultivated	Fallow	Total	Small Farms	Total Farms
12		12	105	175	525	1,179	2,389	9,389	33	25
12		12	736	276	1,248	2,629	5,929	23,570	22	25
17		17	3,744	238	4,987	8,400	2,947	26,106	5	1
11		11	65	26	415	2,190	419	7,561	6	5
11		11	307	734	1,107	1,016	5,121	14,018	66	35
40		40	4,957	1,449	8,286	15,414	16,815	81,230	17	21
24		24	1,902	1,589	5,645	6,822	23,590	61,955	28	38
24		24	2,465	1,829	6,446	10,824	25,511	94,427	28	27
17	.5	16.5	2,660	1,856	5,458	4,897	4,945	30,495	34	16
41	.5	40.5	7.027	5,274	17,549	22,543	54,046	186,867	30	29
12		12	828	306	2,083	29,181	27,409	132,483	15	21
12		12	2,665	375	4,294	7,789	10,087	68,100	9	15
-		-	796	965	6,773	7,848	26,079	143.085	14	18
-		-	2,983	1,825	9,243	49,774	61,210	365,259	20	17
24		24	7,272	3,471	22,398	94,592	124,785	708,927	15	18
43		43	1,203	777	3,120	2,361	50,005	243,836	25	21
12		12	451	183	2,827	2,863	900	43,026	8	2
55		55	1,654	960	5,447	5,224	50,905	286,862	18	18
135	8	5.5								
135	8	5.5								
12		12								

MUNICIPALITY	Farms by Size (No.) Under 10 Has.	10-20 Has.	Under 20 Has.	Average Rural Family Size (No.)	Small Farms Population (No.)	Total Human Population (No.)
GUAJIRA						
Villanueva (El Molino-La Frontera)	175	101	276	5.96	1,645	11,414
Barrancas (Pozo Hondo)	289	120	409	7.92	3,239	14,196
S. Juan Cesar (Mingueo-La Sierra)	251	155	406	5.69	2.310	20,296
	715	376	1.091	6.59	7.194	45.906
MAGDALENA						
Pivijay	1,548	143	1,691	7.77	13,139	31,343
Salamina	232	52	284	6.44	1,829	6,721
Aracataca(Cuatro Caminos-Boquerón-San Javier)	364	102	466	6.26	2,926	21,248
	2,144	297	2,441	6.13	17.894	59.312
SUCRE						
Colosó (Colosó-Chalán)	678	76	754	6.63	4,999	7.663
Overjas (Chengue)	913	125	1.038	6.32	6,560	13,578
Majagual (Pueblo Nuevo)	49	5	54	5.75	311	23,010
	1.640	206	1,846	6.43	11,870	44,257

Feeder Access Roads (Km.)			Farm Area (Has.) 20 Has.			Farm Area (Ha.) all			% follow of less 20 Has.	% fallow All
All Planned	Already Completed	To be Completed	Cultivated	Fallow	Total	Cultivated	Fallow	Total		
13		13	757	203	1,941	11,286	6,912	73,649	10	9
6	1.5	4.5	856	576	2,668	4,120	7,176	34,138	22	21
12		12	475	377	3,242	4,135	5,338	46,881	12	11
31	1.5	29.5	2,088	1,156	7,851	19,541	19,426	154,668	15	13
4		4	4,508	225	6,337	5,922	15,783	148,471	3	11
4		4	193	470	1,312	399	6,416	19,719	36	32
22		22	1,099	583	2,664	6,451	16,675	89,200	22	19
26		26	5.800	1,278	10,313	12,772	38,874	257,390	12	15
12		12	1,339	462	2,468	2.025	4,204	17,604	71	33
12		12	2.119	1,482	4,320	3,346	6,908	49,340	34	14
12		12	91	31	187	505	455	3.499	17	13
24		24	3,549	1.975	6,975	5,878	11,567	65,423	47	18

GENERAL INFORMATION ON THE "PICO Y PALA" PROGRAM

STEPS TO BE TAKEN PREVIOUS TO CONSTRUCTION

1. Study and approval of the roads to be constructed.
2. Selection and appointment of one Audit-Engineer, one Cashier-Supplier, and one Inspector-Topographer.
3. Study and selection of the town where the checking account will be open. Said town will be chosen in accordance with the needs of the program permitting, not only to the Cashier-Supplier to perform his duties as fast and safely as possible, but to the contractors to make their collections without leaving the area and incurring in expenses related to transportation and other costs.
4. Transmittal of funds by the Coordinating Office of the "Pico y Pala" Program, as an advance for the initiation of the construction work.
5. Opening of the checking account in a bank of the town selected by the Coordinating Office of the "Pico y Pala" Program. Said account will be in the name of the working front; the checks must carry the signatures of the Cashier-Supplier and of the Fiscal-Auditor of the regional office.
6. Based upon the minimum wage scale, established for the different sections of the country, fringe benefits and M^3/worker/day accomplishment, the Audit-Engineer will calculate the unit cost of construction materials

transportation to be established in the respective contracts, subject to approval by the National Coordinating Office.

7. Selection by the Audit-Engineer of the personnel to be employed in the construction work. It is advisable that said personnel be native of the region or at least be well-known in the area.

8. The Audit-Engineer must establish the amount of material to be moved by each contractor, if permitted by the topography of the area. Also, he should establishes an approximate deadline for the completion of these working contracts.

9. Elaboration and signature of the respective working contracts. These documents should be signed by the Chief of the Regional Unit, the Contractor, and two witnesses.

10. Initiation of the work.

AUDIT-ENGINEERS

General Information.

The Audit Staff directly supervise the work, and have the responsibility that said work be carried-out in accordance with the geometric requirements in the case of designing or based on construction plans and specifications in the case of building work.

The Audit-Engineers work directly under the supervision of the Chief of the Regional Unit. For proper coordination of the work a permanent communication should be established between the Audit Staff and the Regional Staff, and, at the same time, between these two and the National Coordinating

Office. The Audit Staff should follow recommendations and instructions given by the Chief of the Regional Unit. The Auditors should be graduated Civil Engineers and their headquarters should be located in the area where the work is being carried-out.

In the working front the Audit-Engineer is the representative of "Caminos Vecinales", and as such all his functions should be in accordance with the granted delegation of authority, following the rules and regulations and other general dispositions issued by the above mentioned entity.

All clerical personnel: Cashiers, Topographers or Inspectors will receive precise instructions from the Audit Staff.

FUNCTIONS

The Audit-Engineer will perform the following duties in accordance with the work contract.

1) Classificating and measuring of the materials removed.
2) Supervising that the completion of the work be within the technical principles of design and construction.
3) Reviewing and signing advances of funds, payments and deductions corresponding to the total or partial liquidations of the contracts, salaries, per diem of the personnel, as well as, acquisition of authorized materials, dinamite, etc., if such expenses are related to the program.
4) Controlling of the clerical personnel in a technical and disciplinary manner.

5) Submitting to the National Coordinating Office of the Progrm of "Pico y Pala" in Bogota, within the first ten days of each month, the Construction and Investment, and Supply Reports, in accordance with the following: The Construction Report, that must be prepared under the responsibility of the Audit-Engineer, includes the Progress and Investment o f the work executed during that month, as well as, number of workers and all other pertinent details, as necessary. The Investment and Supply Report, that must be prepared under the responsibility of the Cashier-Supplier, should be in agreement with the Investment figures of the Construction Report. Every three months, an Investment and Execution Program will be prepared, based on the fact that the approved budget corresponds to one fiscal year.

6) Supervising all personnel performance and activities, to obtain maximum results.

7) Authorizing cashier's per diem up to ten days each month.

8) When necessary, have expenses approved by the Audit-Engineer of the National Coffee Federation of the respective Department.

9) Arranging the transmittal, within the first ten days of each month, of the monthly bills of his area to the local Audit Office for the revision and submission to the Program National Coordinating Office. These bills should be prepared in original and two copies, if corresponding to coffee producing areas, and original and one copy for

the remaining areas.

10) Other required functions.

Only the Audit-Engineer could give instructions to the contractors and clerical personnel of his area, in accordance with the contract.

He should remain in the headquarters area from where he should assist all his working zones, and he should not be absent without prior authorization of his immediate supervisor, except "force majeure".

In his absence, he should delegate to the Inspector-Topographer the functions he deems necessary, for the continuous implementation of the program.

The Audit-Engineer should train his personnel in every aspect of the work, in accordance with the existing technical rules of design and construction.

Duties Previous to the Construction.

In cases where the Engineer is the Auditor of the layout studies, he, together with the Contractor, will inspect the site to assure that the road will cross certain pre-determined points. Inasmuch as these layouts are prepared by direct location, the Auditor should decide, in agreement with the contractor, any variation related to specifications and regulations of the layout, in view of the fact that "Caminos Vecinales" does not have set specifications for the ling out of projects to be constructed by the "Pico y Pala" system, which are subject to specifications outlined for Second Class roads stipulated

in Resolution No. 2024 of August 28, 1973.

When the layout is available, he will verify on the site, the project data and will clarify those points which seem to be doubtful or unclear.

Once the layout is received, he will study the project until he has a deep knowledge about characteristics and requirements, then he will calculate the work and necessary data for the preparation of the contracts for land removal, following items 6 and 8 of Steps to be Taken Previous to the Construction.

Also, he will prepare an individual file for every working front under his supervision, where he will register the most important aspects found during the construction, as follows:

Budget balance, initiation date of work of each contractor, record of instructions to contractors, results obtained from the different kinds of materials, causes of the high and low performance of each contractor, modifications authorized to the project, granting of new contracts, ceasing of the work and its causes, visits of officers and their opinions, matters discussed with local authorities, and other factors that he consideres necessary.

Functions During the Construction.

a- Provides to the Topographic Commission all the necessary instructions in connection with construction data and all other aspects related to the proper completion of the project, requesting from the Inspector-Topographer of the working front, an strict compliance of said instructions.

b- Authorizes proper supply to the contractors of the necessary construction equipment, observing an strict control of the respective deliveries.

c- Timely submits to the Cashier-Supplier all necessary data for bimonthly payments to the contractors, such as: measurement and classification of materials, deductions to be effected, and any other required information.

d- In accordance with his criteria, he sets aside a certain amount of M^3 from the bimonthly payment to the contractors, to cover the total payment of the tools in case of termination of the contract by the contractor. Otherwise, the total amount will represent a savings source at the time of final liquidation.

Functions After Termination of the Construction.

a) After total completion of the work, he will submit a final liquidation report, taking into consideration the following facts:

1) That no double payment has been made for any amount of work.

2) That there are no items pending for payment.

3) That the work received meets the corresponding specifications.

b) He will prepare all necessary documents for delivery of the road to the Department or to the corresponding governmental entity, such as: plans, receiving report, files, specifications, maintenance program, etc.

c) The final transfer of the road is effected only through previous authorization issued by the Program National Coordinating Office.

CASHIER-SUPPLIERS

Duties:

a) To follow and comply orders and instructions given by the Audit-Engineer.

b) To receive incomes from the Treasury Group for the different "Pico y Pala" working fronts, issuing the corresponding official receipts, and make deposits in the checking accounts, following instructions from the Program National Coordinating Office.

c) To be responsible for the fiscal an administrative management and custody of the funds and valuables under his care.

d) To verify the amounts of the payment vouchers.

e) To submit for approval of the Regional Fiscal Audit Office and for the clearance of the National Coffee Federation, when necessary, all documents to be audited.

f) To effect all cash or check payments.

g) To accept drafts, and legal deductions or judiciary embargoes to workers and contractors of "Caminos Vecinales" in accordance with the legal rules and regulations of the institution, and with instructions given by the Audit-Engineer in coordination with the Legal Office and the Personnel Group of the Deputy Administrative Office.

h) Daily keeping of the accounting books for Cash and Banks.

i) To prepare bimonthly cash reports and submit them to the Program National Coordinating Office.

j) To submit, within the ten first days of each month, the bills of the preceding month, sending the originals to the Audit General Office for its legalization, one copy for the Program Accounting Office, and one copy to the National Coffee Federation, when appropriate.

k) To conciliate monthly bank balances.

l) To stop for payment the bills that have not been properly signed by the Audit-Engineer of the "Pico y Pala" program of the respective working front.

m) Personnaly supervise the signature of every contract, requesting presentation of identification documents, to assume full responsibility when the corresponding payments are eff-ected.

n) Carefully revise delivery orders for tools, explosives, groceries, etc., determining if properly signed by the contractors.

o) Periodically inform the Audit-Engineer of the budgetary situation, for coordination of funds in transit and bank balances to assure payment to the contractors.

p) Other duties as requested by supervisors.

INSPECTOR - TOPOGRAPHER.

Duties:

a) Assist the Audit-Engineer.

b) Control that study and construction specifications are met.

c) Arrange supply, destination, use and maintenance of tools and equipment.

d) Maintain records of materials quality.

e) Report of performance, problems and daily progress of the work.

f) Provide construction data.

g) Kepp registration files of the contract personnel.

h) Other duties, as necessary.

SUPERVISION OF THE WORK.

Coordination and Control.

It is a basic function of the National Coordinating Office of the "Pico y Pala" Program to direct and control the study and construction stages of all work done under the program. To accomplish these objectives, the office have established rules, procedures and working systems, to enable completion of the general program prepared by the Coordinator.

Inspection:

To control the works being carried-out under the "Pico y Pala" program throughout the country, the coordination has been efficiently organizaed in a manner that allow systematic and effective inspections to all working fronts. The

different sectional units have been grouped in two zones, for this purpose.

An Engineer has been assigned for each of the two zones, who visits periodically the working fronts of his zone, and serves as a liaison between the National Coordinating Office and the Regional Unit. In their visits, the Engineers receive all necessary information, verify work quality and the work progress in accordance with the program, give further instructions, and solve the different technical problems in coordination with the Chiefs of the Regional Unit. After these visits, they should report to the Coordinator, who in turn will inform the results to the Deputy Executive Officer of "Caminos Vecinales" and to the Chief of the Sectional Unit.

THE PICO Y PALA PROGRAM

Actual Personnel and Requirements in Central and Regional Offices

Central Office - Personnel Summary				
Position	Appointed		To Be Appointed	Total
	PyP	CV		
Coordinator		1		1
Engineers	1	1	1	3
Accountant	1			1
Engineer Assistants		1		1
Accountant Assistants	3		1	4
Secretaries	1	1		2
TOTAL	7	5	3	15

Regional Offices - Personnel Summary							
Position	Appointed		To Be Appointed		Totals		Grand Total
	PyP	CV	PyP	CV	PyP	CV	
Engineers	12	28	4		16	28	44
Cashiers - Suppliers	23	7	1		24	7	31
Inspectors	21	32	11	6	32	38	70
Surveyors	30	15	8	3	38	18	56
Others	6	1	2		8	1	9
TOTALS	92	83	26	9	118	92	210

THE PICO Y PALA PROGRAM

Regional Offices Personnel and Requirements

Sectional	*	Engineers		Cashiers		Inspectors		Surveyors		Others		Total	
		PyP	CV	PyP	CV	PyP	CY	PyP	CV	PyP	CV	PyP	CV
Antioquia	1	1	1	1		1	1		2		1	3	5
	2						1		2				3
	3	1	1	1		1	2		4		1	3	8
Atlántico	1		2		1		2		5				10
	2						2						2
	3		2		1		4		5				12
Bolívar	1		2	2			1					2	3
	2					1						1	
	3		2	2		1	1					3	3
Boyacá	1		1										1
	2												
	3		1										1
Caldas	1	1	4	4	1	2	2	4		1		12	7
	2					1		1				2	
	3	1	4	4	1	3	2	5		1		14	7
Cauca	1	2	2	4		7		8				21	2
	2												
	3	2	2	4		7		8				21	2
César	1		2		1		2						5
	2								1				1
	3		2		1		2		1				6
Córdoba	1		2		1		1						4
	2												
	3		2		1		1						4
Cundinamarca	1		3	1			4	1				2	11
	2						3						3
	3		3	1			7	1				2	10
Chocó	1		1	1			1		2	1		2	4
	2					1						1	
	3		1	1		1	1		2	1		3	4
Guajira	1		1	1			2		2			1	5
	2					1						1	
	3		1	1		1	2		2			2	5
Huila	1		2	1		1	3			1		3	5
	2												
	3		2	1		1	3			1		3	5

Cont.

THE PICO Y PALA PROGRAM

Regional Offices Personnel and Requirements

Sectional	*	Engineers		Cashiers		Inspectors		Surveyors		Others		Total	
		PyP	CV	PyP	CV	PyP	CV	PyP	CV	PyP	CV	PyP	CV
Nariño	1		1	1		2	2					3	3
	2									1		1	
	3		1	1		2	2			1		4	3
Norte de Santander	1	3		3		4		7		2	0	19	
	2												
	3	3		3		4		7		2		19	
Quindio	1		1		1								2
	2					1		2				3	
	3		1		1	1		2				3	2
Risaralda	1	1		2		3	1	10	1			16	2
	2	1				1						2	
	3	2		2		4	1	10	1			18	2
Santander	1	1		1		1	2		3			3	5
	2	1								1		2	
	3	2		1		1	2		3	1		5	5
Sucre	1		1		1		2						4
	2	1						2				3	
	3	1	1		1		2	2				3	4
Tolima	1	1	2		1		5			1		2	8
	2					1						1	
	3	1	2		1	1	5			1		3	8
Valle	1	1					1					1	1
	2												
	3	1					1					1	1
Territorios Nacionales	1	1		1								2	
	2					1						1	
	3	1		1		1						3	
TOTALS		12	28	23	7	21	32	30	15	6	1	92	83
		4		1		11	6	8	3	2		26	9
		16	28	24	7	32	38	38	18	8	1	118	92
		44		31		70		56		9		210	

1 - Appointed
2 - To be Appointed
3 - Total

THE DRI AREAS

The GOC is currently negotiating with the IDB and the IBRD with regard to possible loans for the Integrated Rural Development areas totalling $120 million. Few details of the loans are available now, as negotiations are proceeding slowly. However, USAID has scured the following unofficial information from DNP.

The DRI program has two targets: (a) To rationalize the linkage of the rural economy to the market, and (b) to increase real rural income, and employment. To do so, the program will deal with production variables such as: credit, technology, labor, commercialization and the development of labor force (education, health services, etc.)

This program will utilize existing government service institutions to channel public expenditures towards these pre-selected DRI areas. There are 6 areas that have been already chosen as DRI areas in the country as listed on the following chart:

Desarrollo Rural Integrado
Usuarios del Proyecto

Distritos Area 1	Población Total	No. de Familias de Pequeños	Familias por Atender con el Proyecto
Ipiales	158.364	13.745	3.436
Pasto	359.121	17.606	4.402
Mercaderes	228.227	22.183	5.546
Popayán	240.865	15.026	3.756
Sub-Total		68.560	17.140

Distritos	Poblacion Total	No. de Familias de Pequeños	Familias por Atender con el Proyecto
Area 2			
Facatativá	132.452	10.082	2.521
Fusagasugá	99.170	5.696	1.424
La Mesa	118.678	7.652	1.913
Girardot	156.652	5.648	1.412
Cáqueza	39.454	5.522	1.380
Sub-Total		34.600	8.650
Area 3			
Yarumal	158.926	6.775	1.694
Rionegro	385.237	25.744	6.436
Sub-Total		32.519	8.130
Area 4			
Montería	266.688	13.126	3.282
Sincelejo	228.685	6.133	1.533
Tierralta	41.042	786	786
Chiriguaná	47.351	656	656
Sub-Total		20.701	6.257
Area 5			
Soatá	101.305	13.581	3.395
Duitama	337.691	26.758	6.690
Tunja	1.238.060	26.393	6.348
Tenza	93.545	14.602	3.651
Chiquinquirá	73.786	18.848	2.712
Sub-Total		91.182	22.796

Cont.

Cont.

Distritos	Población Total	No. de Familias de Pequeños	Familias por Atender con el Proyecto
Area 6			
Guavatá	226.100	25.624	6.406
Socorro	203.102	18.452	4.613
Málaga	96.955	12.540	3.135
Sub-Total		56.616	14.154
TOTAL		304.178	77.127
BID - Boyacá-Santander			36.950
BIRF - Areas 1 a 4			40.177

Selection of specific municipios within these broader areas will be made later on the basis of the following production criteria: land availability, small farmer density, potential for increased cultivation, gross family income, hectare productivity, usage intensity, percentage of owned property, credit received, value of coffee production, and number of coffee growers. Social criteria will include: rural centers with car access, rural population density, poor population density, percentage of houses with electricity, sewers, and water, and numbers of schools, health posts and hospital beds.

The initially selected locations that fit these criteria have been divided into 6 areas for IDB and IBRD funding. The proposed $50 million IDB loan will finance Areas 5 and 6 in Boyacá and Santander. (See above Table). The proposed $70 million IBRD loan will finance Areas 1-4 in Cauca, Nariño, Cundinamarca, Cordoba and Santander.

The administration of the Integrated Rural Development Program will be, at both the national and regional/local levels, under the direction of the Caja Agraria. The Caja Agraria will chair a committee composed

of key representatives from the agricultural, educational, health and public work agencies who have programmed activities in the Integrated Rural Development areas. The committee will be responsible for coordinating and integrating the participating agencies activities within the Integrated Rural Development areas, and to assure that the desired integration occurs, the committee will have control over the preparation and execution of the budgets of each agency participating in the Integrated Rural Development areas activities being funded by the Inter-American Development Bank and the International Bank for Reconstruction and Development.

COLOMBIA

Labor Intensive Access Road Program (Pick and Shovel Program)

Status of Cost and Length of Roads Completed as of June 1974

	LOCATION	Total Length of Roads Kms.	Distance Completed as of June 1974 Kms.	Cost of Construction as of June 1974 000 Pesos	Average Cost per Km 000 Pesos	Average Cos per Km US$
	ANTIOQUIA					
01	Verdum-Gibraltar	4.9	4.3	1,346	313	10,433
02	Alto Mantequilla-Puente Roto	4.1	1.4	788	563	18,770
03	Crucero Alto del Corral	6.0	0.3	102	339	11,286
04	Marinilla-Montañitas	3.0	3.0	334	111	3,713
		18.0	9.0	2,570	286	9,518
	BOLIVAR					
05	Santa Rosa-Canelos-Buenavista	12.0	-0-	200		
06	Bayunca-Arroyo de Piedra	12.0	-0-	150		
		24.0	-0-	350		
	BOYACA					
07	Zetaquirá-Hormigas	16.0	13.4	954	71	2,373
08	Vía Paez-La Cumbre	16.0	8.7	714	82	2,736
09	Moniquirá-El Naranjal	6.4	6.4	427	67	2,224
10	Parma-Otro Mundo	18.0	11.1	740	67	2,221
		56.4	39.6	2,835	72	2,386
	CALDAS					
11	Canaan-Alsacia	2.8	1.8	1,006	529	17,646
12	San Diego-Berlín	17.0	9.4	5,678	604	20,136
13	San Lorenzo-Pasmi	3.8	3.3	1,628	493	16,440
14	La Sivia-La Pola	3.5	-0-	150		
15	Buenos Aires-Guacas	8.0	0.9	260	289	9,639
16	La Quiebra-El Placer	11.0	0.9	147	163	5,439
17	Pensilvania-Pta. Linda	20.0	0.9	475	528	17,606
18	Risaralda-La Rice	10.0	0.9	257	285	9,514
19	Aguadas-Río Arriba	14.0	0.6	150	250	8,333
20	San Pablo-Monón-La Esperanza	3.0	0.2	80	400	13.333
21	Cabras-La Miel	6.0	-0-	150		
		99.1	18.9	9,981	528	17,603

LOCATION	Total Length of Roads Kms.	Distance Completed as of June 1974 Kms.	Cost of Construction as of June 1974 000 Pesos	Average Cost per Km. 000 Pesos	Average Cost per Km. US$
CAUCA					
Silvia-Puente Real-La Campana	19.5	6.2	3,589	579	19,295
Alto San José-Puente Santander	15.0	5.9	2,239	386	12,870
Tres Quebradas-Guaitatá	9.1	6.8	1,714	252	8,404
Quebraditas-Media Naranja	6.0	2.6	1,788	688	22,916
Santa Rosa-Mota	9.0	7.8	1,799	231	7,688
San Juan-Granadillos	11.2	3.3	1,806	531	17,703
Inza-Turmina	10.5	6.3	2,360	369	12,290
Florencia-Esmeraldas	18.0	6.6	2,471	374	12,478
	98.3	45.5	17,766	390	13,015
CUNDINAMARCA					
El Resguardo-El Carmen-Vereda Ponta	3.0	2.4	854	356	11,860
Cáqueza-Vda. Centro-Vda. Páramo	7.8	6.6	1,759	267	8,886
El Charco-Mercaditos-La Batea	7.0	5.4	1,190	220	7,347
Florencia-Mogambó-El Palmar	5.1	4.3	852	194	6,450
Alto de la Cruz-Bateas	4.5	3.6	998	277	9,237
Horizonte-Guavio-Sta. Lucia	6.1	5.5	1,025	186	5,881
La Palma-Topaipí-El Naranjal	5.0	3.3	1,138	345	11,497
Sasaima-El Limonal-La Vega	5.0	3.5	991	283	9,437
Gachetá-Muchindote	5.0	2.0	335	168	5,589
	48.5	36.6	9,143	250	8,327
CHOCO					
Bagadó-Certeguí	13.5	8.1	3,147	388	12,949
	13.5	8.1	3,147	388	12,949
GUAJIRA					
Barrancas-Pozo Hondo	15.0	1.7	156	91	3,049
	15.0	1.7	156	91	3,049

xchange rate: 30 Pesos = US$1

urce: Fondo Nacional de Caminos Vecinales - Informe del Director Ejecutivo 1973/74

	LOCATION	Total Length of Roads Kms.	Distance Completed as of June 1974 Kms.	Cost of Construction as of June 1974 000 Pesos	Average Cost per Km. 000 Pesos	Average Cos per Km. US$
	HUILA					
41	El Recreo-San Guillermo	15.0	2.9	1,217	190	6,343
42	Riveria-Siberia	15.0	2.6	1,117	430	16,421
43	Pueblitos-Galicia-Begonia	45.0	0.8	32	40	1,330
44	El Paraíso-Balsillas	15.0	0.1	32	322	10,732
		90.0	6.3	2,399	375	12,495
	NARIÑO					
45	San Fco.-Tapialquer Alto-Guayabal	14.3	5.1	1,600	314	10,458
46	Berruecos-Santa Rosa	12.0	6.2	1,895	364	12,144
47	Yaramal-Floresta	8.0	0.8	236	262	8,757
48	Lucha-Leiva	17.0	0.2	150	750	25,000
		51.3	12.3	3,881	315	10,513
	NORTE DE SANTANDER					
49	Convención-Soledad	8.6	6.0	2,500	417	13,886
50	Toledo-Roman-Ima	25.0	7.2	1,658	230	7,675
51	Gramalote-El Zumbador	15.0	1.0	538	538	17,932
52	Los Mangos-La Carrera	6.6	0.2	216	862	28,746
53	San Calixto-Guaduales	10.0	-0-	32		
54	Hacari-San Miguel-Castrillon	10.0	-0-	22		
		75.2	14.4	4,965	342	11,414
	RISARALDA					
55	Quinchia-Santa Helena	13.0	10.0	1,687	169	5,621
56	Santuario-Pueblo Vano-Calichal	14.0	7.9	2,473	309	10,304
57	Napoles-Alto Cauca	6.0	0.4	63	126	4,185
58	Campoalegrito-Colmenas	3.0	0.3	137	456	15,232
59	Totui-La Laguna	13.0	-0-	48		
60	El Manzanillo-Santo Domingo	3.4	0.8	157	175	5,820
61	Mil Ochenta-Corozal	3.2	0.7	205	256	8,532
62	La Argentina-El Dinde-El Silencio	13.0	0.2	89	263	8,757
		68.6	20.4	4,848	237	7,883

LOCATION	Total Length of Roads Kms.	Distance Completed as of June 1974 Kms.	Cost of Construction as of June 1974 000 Pesos	Average Cost per Km. 000 Pesos	Average Cost per Km. US$
SANTANDER					
Málaga-Guasimo	6.6	2.7	1,166	417	13,884
Molagavita-Laguna de Ortices	13.6	1.4	1,281	854	28,469
La Paz-Santa Helena	12.0	-0-	200		
Soata-Onzaga	12.0	-0-	120		
Contratación-El Guacamayo	8.5	-0-	150		
	52.8	4.1	2,917	694	23,154
SUCRE					
Chalán-Chengue	13.0	-0-	57		
	13.0	-0-	57		
TOLIMA					
Betulia-Santa Barbara	9.1	8.1	1,664	185	6,164
Olaya Herrera-Maco-Los Guayabos	12.0	2.0	706	353	11,761
Rovira-Luisa-El Guadual	12.0	1.0	466	424	14,135
Planadas-Bilbao-La Herrera	12.0	0.1	80	800	26,666
Limites del Valle-La Herrera	3.0	0.1	81	810	26,990
	54.1	11.3	2,998	265	8,842
VALLE					
El Vergel-La Guayacana-El Aguila	6.6	5.5	1,859	332	11,067
El Cairo-El Brillante	11.6	5.4	1,515	281	9,352
Venecia-Cristales	3.4	3.0	348	116	3,867
Ulloa-Chapinero-El Placer	6.0	3.0	535	179	5,951
El Palmar-Centella	5.0	1.2	374	312	10,393
	32.6	18.1	4,632	244	8,126
TOTAL	810.4	346.4	72,645	295	9,823

hange Rate: 30 Pesos = US$1

rce: Fondo Nacional de Caminos Vecinales - Informe del Director Ejecutivo 1973/74

LOGICAL FRAMEWORK

A.1. GOAL

To improve the level of welfare among the rural poor by stimulating the agricultural development of those rural areas of Colombia which do not presently have ready access to external markets and services. A sub-goal of the program is to improve the nutritional well-being of the lower income groups of the Colombian population by helping to satisfy their basic dietary requirements through increased availability of basic foods.

A.2. OBJECTIVELY VERIFIABLE INDICATORS

Baseline study of food consumed before road - later follow-up study to measure change in diet.

Gómez scale for infants.

Additional indicators to be developed as part of the impact study financed under this loan.

A.3. MEANS OF VERIFICATION

Evaluations, both baseline and follow up, to be carried out by the Caminos Vecinales Evaluation Office and reported to USAID upon completion and within annual reports.

A.4. IMPORTANT ASSUMPTIONS

B.1. PURPOSE

In declining order of importance: to stimulate increased agricultural production among small, heretofore isolated farmers, principally by improving their access to markets and reducing transport costs; to open to those same small isolated farmers the services of governmental and private sector institutions, particularly agriculture, education and health; to introduce institutional improvements on the agency implementing the project, Caminos Vecinales, particularly in project selection and upgrading of technical personnel; and to supplement the incomes of underemployed agricultural workers, providing them with temporary employment.

B.2. END OF PROJECT STATUS

a. In zone influenced by road construction:

- Increased number of hectares under cultivation
- Improvement in crop patterns
- Increase in school attendance
- Increased amount of produce moved to market by truck/bus
- Greater frequency of visits of technical assistance personnel (agricultural)
- More frequent visits of health promotors and other health sector personnel
- Increased use of credit by farmers.

b. International lending agencies willing to loan to Caminos Vecinales.

GOC increases amount budgeted to Caminos Vecinales.

c. To increase purchases of agricultural inputs by off-season agricultural workers.

B.3. MEANS OF VERIFICATION

Evaluation and impact studies to be carried out by Caminos Vecinales Evaluation Office will establish baseline data for the areas to be influenced by road construction, then return for a follow-up evaluation within one, two and four year intervals.

Annual reports by Caminos Vecinales to USAID.

Interviews of agricultural workers to determine how they disposed of their income gained from working on road construction.

Ability of Caminos Vecinales to obtain follow-on financing in 1978.

GOC budgetary allocations.

B.4 IMPORTANT ASSUMPTIONS

Other GOC services will be provided.

Caminos Vecinales will utilize the selection criteria and evaluation office on all Pico y Pala road, not just AID-financed road.

The rices of technological agricultural inputs remain relatively stable.

If Caminos Vecinales is absorbed into the Ministry, it is able to retain its identity and program structure.

C.1. OUTPUTS

a. Labor intensive feeder road construction in rural areas.

b. Caminos Vecinales has developed and is using an improved:

(1) project selection methodology
(2) project evaluation procedure.
(3) project design and construction process

c. Caminos Vecinales has an in-service training program.

d. Project Selection and Evaluation Office to provide continuous evaluation of Pico y Pala construction projects socio-economic and ecological impact.

On all newly initiated projects the Project Selection and Evaluation Office will prepare, with the appropriate regional office, prefeasibility studies.

e. Evaluation of maintenance capacity of various institutions and procedure for contracting for road maintenance.

f. More reliable cash flow and budgetary accounting system.

C.2 OBJECTIVELY VERFIFIABLE INDICATORS

			CY76	CY77	CY78
a.	Kilometers of Road Construction		200	330	350
	Roads completed		0	38	48
	Roads Started		29	48	34
b.	1) Methodology	in use	Feb. 76		
		evaluated	Feb.77/78		
	2) Procedure	in use	Apr.76		
		evaluated	Apr.77/78		
	3) Process	in use	July 76		
		evaluated	Jul.77/78		

Report on environmental assessment prepared in collaboration with technical advisors by Jan.77.

		77	78
c.	Number of courses	8	8
	Number of employees trained	100	100

d. Staffed and operating - Dec.75

Socio-economic and ecological impact studies being completed. July, 1978

e. 1) Maintenance mechanisms defined - Sep.76
   2) Maintenance contracts signed - Oct.76

f. Monthly budgetary reports reflecting improvements in accounting methodologies - Nov.76

D.1. INPUTS

a. Road Construction Funds

b. Institutional Improvement Training and technical assistance

   1) Sub-Project selection
   2) Sub-Project Evaluation
   3) Design and Construction Capacity
      - Expert Assistance
      - In-Country Training
      - Seminars
      - Observation Training
      - Interchange
   4) Consideration of Environmental Factors
   5) Cash Flow, Budgetary and Cost Accounting
   6) Evaluation of Maintenance Capacity

c. Maintenance Funding.

D.2 BUDGETS
(US$000)

	A.I.D.			G.O.C.		
	CY 76 $	CY 77 $	CY 78 $	CY 76	CY 77	CY 78
D.2.a.	175	2,700	1,825	1,500	2,000	2,500
D.2.b.i	14	5	6			
D.2.b.ii	41	29	30			
D.2.b.iii	10	40	38			
D.2.b.iv	15	30	15			
D.2.b.v	12	--	--			
D.2.b.vi	15					
D.2.c.				233	333	434
TOTAL	282	2,804	1,914/5,000	1,733	2,333	2,934/7,000

D.3 MEANS OF VERIFICATION

Caminos Vecinales and USAID quarterly accounting reports.

D.4 IMPORTANT ASSUMPTIONS

1. Caminos Vecinales will be able to find and hire qualified personnel for the Evaluation Office.

Caminos Vecinales can find and contract for maintenance, environmental, and impact studies.

Disbursement system is approved.

LAND DAMAGE CAUSED BY ROAD CONSTRUCTION IN THE MOUNTAINOUS AREAS OF COLOMBIA

By: James A. Liggett
Professor of Civil & Environmental Engineering
Cornell University, Ithaca, New York
Visiting Professor at the Universidad del Valle,
Cali, Colombia.

INTRODUCTION

This report is concerned with the environmental effects of roads and road construction in the mountainous terrain of Colombia. Of special emphasis are the "roads of penetration" or feeder roads which serve agricultural areas and small communities that traditionally have had transportation only by foot or animal over trails. The environmental effects of concern center about erosion, landslides, and sedimentation and secondary effects caused by those problems. Other concerns - adverse effects on ecological balances, air pollution, changes in wildlife, etc. - are believed to be small and in any case are outside the area of competence of the writer.

Benefits of these roads - low cost transportation, farm to market access, educational access, health access, beneficial changes in farming practices, creation of jobs, etc. - are considered to be in social and economic fields, rather than environmental, and hence are not subjects of this report. Although occasional environmental benefits may result from road construction, they are rare and usually represent a planned reversal of the destructive processes treated herein.

The mountainous terrain of Colombia is extremely steep and often unstable. The mountains are undergoing a process of natural evolution. Thus much of the terrain is naturally unstable leading to frequent landslides. These landslides provide much of the enormous amounts of sediment carried by the rivers and leave scars subject to further erosion. Frequent high rates of rainfall accelerate the process. Sedimentation in the rivers, in turn, leads to a number of problems which include flooding, frequent changes in course of the river and subsequent damage to permanent structures and agricultural land, contamination of personal and public water supplies, high rates of reservoir sedimentation, and a greatly increased difficulty in the development of water resources for small or large uses.

The economic and social consequences of this threat are unknown but very large. During the rainy seasons in Colombia the loss of life and property resulting directly from the instability of the land is reported daily in the newspapers. Engineering design of public works such as water supply, irrigation, drainage, flood protection and other uses of water resources is centered on the sediment problem. The writer has noticed a high rate of failure in such projects. These problems are highly prejudicial to the

development of what is perhaps Colombia's greatest natural resource - an abundance of hydroelectric power. For example, the storage portion of the Anchicayá reservoir, a power reservoir in western Colombia, filled with sediment in approximately seven years. This reservoir now has no regulational value and continual dredging is necessary to keep sediment out of the turbines. The 1000 megawatt dam and power plant at Chivor, Colombia's largest, will undoubtedly suffer a similar fate. Other examples abound, including some which have represented a great loss of life - landslides at Quebradablanca and in Medellín - and property.

Although the processes are natural, land use has a great effect on damage done. To cite the case of Anchicayá again, two-thirds of the water comes from the anchicayá River, which has a relatively undeveloped and virgin watershed, while two-thirds of the sediment comes from the Dagua River where the watershed is farmed more intensively and has a road network. Roads seems to be a large contributer to the instability of the land. Upstreams of Chivor a small stream, the Aguacia, near Sta. Maria, provides a large amount of sediment to the Batá River. Much of the erosion in this area appears to stem from the concentration of water due to a small road, although some probably comes from poor farming practices also.

The writer has no way of estimating the economic consequences of increased land instability due to the works of man, and especially due to road construction. However, such consequences could easily surpass by several times the original cost of the road.

Erosion is not always easy to prevent. However, in this case an ounce of prevention is truly worth a pounds of cure as the remedy and restoration of eroded land is extremely difficult and expensive. For most practical purposes such land is simply lost, or worse it is moved downstream where it creates other problems. Landslides may be preventable in some cases, especially where caused by the erosion and in a few cases where caused by high groundwater levels. Thus planning the protection of the environment with respect to these threats is of utmost importance. They represent, however, long range problems of the type about which the government of Colombia has shown little concern.

The remainder of this report is devoted to immediate and long term damages from roads and road construction and to some remedies and planning that should take place to prevent such damages.

IMMEDIATE DAMAGES

By its very nature a road requires land which may be valuable for agricultural and other beneficial uses. In the case of small roads in the mountainous regions of rural Colombia, the road itself occupies a

minimum of such space. Equally important are the borrow and spoils areas. Borrow is usually taken from cuts. But is is much easier to cut into the side of a mountain than to fill a canyon; thus a large amount of spoil usually results from road construction. This spoil may be of immediate damage to adjacent agricultural lands. Although it is extremely important to the small landholder along and below the road, such damage is probably economically small compared with other effects discussed below.

One of the initial consequences of the road is the redistribution of surface water. To some extent the shallow groundwater may also suffer a change or appear on the surface in road cuts. This redistribution has an immediate effect on the land adjacent to and below the road, especially if used for individual or collective water supply or for irrigation.

Of greater importance is the pollution with sediment of the surface waters. Such pollution not only affects the adjacent landholder and families but also may be prejudicial to individual and municipal water supplies far downstream.

In steep terrain the cutting of a road very often represents an immediate landslide danger. Indeed, a great many landslides are caused by toe erosion whereby the support for a slope has been cut away. The man-made cut is in a broad sense a type of toe erosion. Also a slide can be triggered by the sudden change in groundwater caused by a road cut. A slide is of immediate danger to workers, travellers and all those who live near the road as well as to the agricultural lands adjacent to the road.

LONG TERM DAMAGES

The consequences of the immediate damages are usually small when compared to the long term effects. A landslide, for example, is more likely to occur in the week after a cut is made than in any one week thereafter. However, the slide threat remains for years and may place travellers and homesteaders under a Damocles sword. Cases are not uncommon where multiple slides have occurred for a period of many years. Even if such slides cause no immediate loss of life and minimal agricultural damage, they represent a source of sediment, the consequences of which are discussed below.

The redistribution of surface waters is the primary cause of erosion from road construction. There are many areas in Colombia where the topsoil prevents the rapid erosion of an underlying strata. (The above cited case of Chivor is an example. Another is in the Río Nima watershed near Palmira, over 300 miles away. There are undoubtedly thousands of similar cases in between.) The topsoil can be broken mechanically (by road construction or farming) or by a natural or unnatural concentration of water. Once the underlying strata begins to erode, the process can be extremely rapid, creating canyongs which degrade at the rate of several tens of meters per year initially. Such canyongs typically have unstable side slopes, leading

to slides which tear away the adjacent land and dam the creek at the bottom. The natural dam creates a lake which lasts only until the dam is overtopped. The resulting surge of sediment and water has often caused loss of life as well as extreme property destruction.

Sediment damage is a problem which is not well recognized except by engineers who have to deal with it. The accumulation of sediments in a river is a slow and unspectacular process. However, the equilibrium or stability of a river or stream depends upon the amount of sediment delivered to it as well as the amount of water it carries. It is absolutely false to assume that a small amount of increase in sediment of a river which already carries a large amount will have negligible effect. Although the effect may indeed be small, the process is highly nonlinear whereby a small sediment increase may trip a stability mechanism leading to large regime changes. Watershed changes usually have the effect of increasing sediment loads, increasing peak discharges, and decreasing base flows. Road construction, although the affected area may be a minute percentage of the total watershed, has a disproportionate effect.

Some of the consequences of stream sediments are:

1. Increased sediments often lead to a braided river, a condition whereby the river bed greatly widens and a number of interconnected streams appear during normal flows. The main stream of the river and the interconnected channels continually change course over the very wide bed, leading to a condition whereby engineering works become difficult and very costly.

2. A related condition is the meandering of a natural stream. Most streams meander, change course gradually through the process of shifting curves. From an engineering standpoint a meandering stream is much more stable than a braided stream and can be used and controlled much more easily. The process of meandering is largely governed by sediment concentrations and flows. A change in either quantity may change the response of the river to engineering works and controls.

3. An increase in sediment concentration leads to an increase in deposition or aggradation in some parts of the river. The river channel becomes clogged so that flood flows are not easily passed and large innundations result. In the case of Colombia, floods are a problem in both the Magdalena and Cauca Valleys (and in other areas) which represent the country"s most productive agricultural lands.

4. The problem of reservoir sedimentation has been cited previously in this report. A tremendous and forever renewable source of energy for Colombia steams from the high rates of rainfall on the steep mountains. This source of power may well be more important in the long run than all of the fossil fuels and forests of the country. The utilization of this natural energy requires the construction of dams in the narrow, steep canyongs. The resulting reservoirs often have a minimum amount of storage

capacity and this capacity is particularly susceptible to filling with sediment. The and result is greatly diminished usefulness of the energy resources.

5. Colombia has begun to plan multipurpose reservoir projects. The first will probably be the Salvajina dam on the Cauca River and the second may be on the Río Sinú. These reservoirs not only provide a flexible power supply but also storage for irrigation, water supply, low flow augmentation (for pollution purposes). and flood control. These values would be nullified by filling the storage pool with sediment.

6. Agriculture use of water depends to a great extent on small engineering works on the smaller streams. In the Cauca Valley, for example, most of the irrigation comes from intake structures on streams arising in the Cordillera Occidental and Cordillera Central. (Wells are also a source of irrigation but the Cauca River supplies a negligible percentage). Sediment has lead to the failure of a number of these structures and/or the complete clogging of the irrigation canals.

7. Since no one wants to drink muddy water, the sediment must be removed from individual and municipal water supplies. This operation is a costly part of the treatment process. During times of high sediment loads some plants become overwhelmed and are faced with the choice of passing muddy water to the users (which may also carry harmful contaminates since desinfection becomes less effective) or suspend operation. The residents of most Colombian cities have become very familiar to both choices.

8. Finally, it is believed that a large percentage of sediment finds its way into streams through landslides. (Only a research program and extensive field data can determine the origins of sediment). But the two phenomena are coupled. A previous example was cited where slides may dam a stream, leading to high water flows when the dam breaks, creating erosion which leads to additional slides. Also it is believed that a large number of slides are caused by toe erosion, which in turn is linked to the sediment in the stream.

In summary, the economic (and social) consequences of sediment are jnknown, although known to be very, very large. This is an environmental problem which has traditionally been attached (at least in Colombia), at the point of damage. A broader view toward prevention appears to be much cheaper and more effective. In the case of road construction, such prevention may lead to increased initial costs, but the equivalent of such costs (or perhaps several times such costs) is rather literaly being passed downstream.

REMEDIES

Each construction site presents unique problems. The best remedies for prevention of environmental damage is a knowledge of the problems on the

parts of all parties involved in the construction, the builder, the contractor, and the inspection agencies. Basically a road is an open wound in the earth and must be protected in order that the damage does not increase. That fact, plus a strict adherence to the principle that run-off from above the road must not be concentrated by the road, will prevent much of the damage. Specific points which should be considered follow.

Route location of a proposed road is a complex process. It begins with the political or economic decision that two points should be connected. The route may then be chosen to serve selected intermediate points. Further refining of the route is an economic choice involving the variables of length, standards on grades, curves, etc., the accessibility, the ease of construction, and value of the right-of-way. The choice naturally involves a study of soil types and land stability, but often only from a point of view of construction. Thus the route location should consider these factors from the point of view of the production of landslides, (either upslope from the road or downslope) and the possibilities of erosion and sediment production.

Techniques of route location are in the field of the highway engineer and will not be considered herein. However, it should be noted that the skilled use of aerial photography can save a large amount of field work and expense. Aerial photography can be used to identify stable and unstable zones, drainge patterns, soil types, topography, and vegetation. Although some of these factors may need further verification in the field, tentative route selection can often be made on the basis of photography alone. Whether the road is to be a highway or the neighborhood, labor intensive tertiary road, the use of photography for route selection and environmental evaluations should not be overlooked.

In order to minimize the immediate damage of construction, the borrow and spoils areas should be selected with a view toward erosion and sediment production. In the labor intensive types of road the spoils are usually dumped downhill from the construction site. Thus virtually all of the material removed will find its way to nearby streams. The damage from the spoils should be evaluated. However, to do so would require a research effort. Indeed, if the sediment production from the road is limited to the cut material, the economic balance may favor a continuation of the present practice.

However, it is also possible that the spoils areas may damage vegetation or clog streams setting the stage for erosion and sediment production several times the volumes of the spoils. Such damages can usually be pevented by carefully treatment, compacting, revegetation, protection and containment by filters, rock cribs, walls, etc. Such measures are almost never economic from a point of view of the road alone. The larger view of environmental protection may reverse the economic picture.

Methods of prevention of landslides are not well-known and, especially with regard to road construction, much research is needed. However, many slide prone areas can be identified. If these areas cannot be avoided, as is often the case in Colombia, an assessment of the risks should be made and preventive measures taken in so far as possible. In any case, the possibility of slides and the consequent sediment production and erosion should form part of the economic evaluation of the project.

The role played by groundwater in the creation of landslides is known to be important. Road cuts and scars will unevitably change the groundwater situation near the surface. Thus, a part of the initial assessment of environmental damage and route location should include a picture of the near surface groundwater.

The distribution of surface waters is emphasized in this report since the writer belives it has received all too little attention. The natural run-off pattern may or may not be causing serious erosion. Often the natural patterns lead to laminar erosion whereby the sediment production comes from the topmost layer of soil with a more or less even distribution. Laminar erosion virtually always occurs on agricultural lands and can be tolerated unless it reaches serious proportions on shallow soils. Most disturbances in the drainage pattern, and especially roads, cause a concentration of run-off which places the water in specific channels. These new watercourses do not contain protection against erosion and the results may be spectacular. The writer has noted this phenomenon in Colombian soils in steep terrain whereby an underlying, unstable soil is protected by vegetated topsoil. Once the topsoil is broken, the erosion process can proceed rapidly, followed by landslides and increased erosion in cycles with a tremendous sediment production.

Thus, a primary consideration in road construction is to avoid, in so far as possible, thedisturbance of the natural drainage pattern, if the natural pattern appears to be stable. If a considerable amount of undesirable erosion already results from the natural drainage, an integral part of the road construction should be the restoration of stable channels. It is usually cheaper to concentrate water upslope from the road in order to avoid the construction of a culvert at each small stream. However, that is exactly the practice which leads to undesirable concentrations.

Erosion prevention measures consist of energy dissipators (even for very small streams and rivlets), the use of small check dams, vegetation to hold the soil in place and redistribute water, placing of artificial roughness elements in streams to diminish the velocity, and artificial reinforcement of stream beds in erosion prone areas. Designers should be especially careful at the outlets of culverts and bridges. Also, many of the structures are intentionally designed so that they will be overtopped fairly frequently (especially on terciary roads in which no great economic loss occurs from occasional closure). However, the erosion possibilities of such overtopping should be considered.

A final point in the prevention of this type of environmental damage may be the most important. All of the weak points along a road cannot be foreseen and, even for those that are, all of the preventive measures are not going to be adequate. Therefore, a strict program of vigilance and maintenance is of the ulmost importance. It is precisely in this area that many underdeveloped nations, including Colombia, have failed. They often prefer new construction, as a visible sign of progress, to the maintenance of old construction. However, the economic benefits of maitenance may far exceed those of a new road.

When environmental damage is a possibility, maintenance is especially important. Erosion can often be stopped easily and quickly in its initial stages. After the formation of gullies and the initiation of the erosion-landslide cycle, the cure can be extremely costly, and at times practically impossible. Even slide danger can often be detected in its early stage and the slide prevented or limited. Thus, maintenance should include not only the road itself but also the surrounding terrain on both the uphill and downhill sides.

Again, it cannot be emphasized too strongly that the very early detection and correction of the types of problems discussed in this report may be by far the most positive and practicable measures which can be taken. Unfortunately, they have also been one of the most neglected in the past.

UNKNOWNS

Benefit-cost studies for road construction often include many "secondary benefits" such as increased employment in a region, educational opportunities, cultural benefits, etc., while neglecting the more remote consequences of environmental damage. It is true that the economic consequences of such environmental damage, much of which occurs far from the construction site, are unknown. (However, the economics of negative environmental consequences should be no harder to evaluate than those of positive cultural benefits). It is quite evident that the consquences of erosion, sedimentation and landslides in Colombia are extremely large in both economic and social terms. It is also evident that, although these problems are basically natural, they are greatly execerbated by the works of man and especially by unwise land use. Research into the evaluation and prevention of such problems should pay enormous dividends.

Research into the more technical problems should also receive a high priority. For example, many landslides can be detected before occurrence and prevented. Sometimes, the prevention involves massive and costly structures where land values warrant such measures. However, the landslide trigger is often a simple mechanism such as toe erosion and/or excessive groundwater levels which can sometimes be controlled without great expense.

Specifically in connection with secondary and terciary roads, these problems are so omnipresent that even small preventive measures applied thousands of times can be of great economic importance. Thus, research into cause and prevention is certain to be economically and socially important. The problem in that regard is that research, like maintenance programs, show little visible progress whereas new construction, like an important mineral discovery, can be represented as development. Often the public and may short-sighted officials can forget the relative uselessness and even damage caused by an unmaintained road as in the case of the rapid exhaustion of a mineral source compared to the perpetuity of natural processes.

INSTITUTIONS

The writer considers institutional arrangements not properly a part of this report. However, Colombia, as in most countries, has a great variety of institutions which often work on related problems independently, or worse still, work at cross purposes. Environmental damage is particularly susceptible to lack of communication between institutions.

Many of the problems mentioned above are under the responsibility of INDERENA, the national agency concerned with natural resources. (In the Cauca Valley, the Corporación Autónoma Regional del Cauca (CVC) has this function). Thus, it would appear that there is a large advantage in giving INDERENA the power to oversee construction of roads (and many other types of constructions also) with a view toward environmental protection. In fact there are large advantages and cost savings in having a single agency in charge of all the environmental aspects of a watershed, including pollution by industrial user and cities, water supply, irrigation, drainage, forestation, etc.

The problems come from institutional jealousies and a lack of financing. INDERENA probably has neither the funds or trained personnel to carry on this type of activity at the indicated level. However, if a percentage of the funds alloted to road construction could be diverted to an environmental protection agency, they might insure that the builders adhere to the safeguards and that problems are remedied before they become massive.

STATE OF THE TECHNOLOGY

Some of the environmental problems of roads as described herein are solvable under the present technology, some are potential solvable and others must await the results of basic and applied research into the phenomena. The world "solvable" as used above indicates a remedy within economic reach and excludes highly unpractical or uneconomic measures.

Landslides can and are being controlled where land values render the engineering works economic. Controls include the removal of overburden, the change of land slope, and massive retaining structures. These solutions have also been used with respect to Colombian roads. However, they are largely too costly for widespread use on terciary roads. Also the control of groundwater may be a solution to many landslide problems but has not been widely used due to a lack of data and research. It is possible that this method would have wide application to the Colombian situation.

At present, however, landslides are a fact of the Colombian scene with which the road builder must live. The technology of locating unstable areas is well-advanced. Thus, the first rule of avoiding landslides is to avoid potentially dangerous areas. When that is not a practical solution, the stabilizing techniques may be used, perhaps with limited success. Education into the techniques of aerial photography and soil mechanics is a must for Colombia road designers. Then research into landslide stabilization, in the laboratory and in the field, should yield dividends.

The state of the art of erosion control is more advanced. Soil stabilization through vegetation, through control of run-off, through terracing or other measures which limit land slope, through energy dissipators in streams and rivers, through sediment retention dams, etc., have long been used throughout the world. The primary factor with regard to erosion control is the awareness on the part of public officials that something needs to be done and to do it in the early stages of a problem. Education is valuable in this regard also in order that the correct design can be applied at the proper place. The role of research is to find more effective and economic means of erosion control, especially with respect to the Colombian situation in which the topography is more severe and the soil types different from those in the developed countries. The high rates of rainfall on the steep terrain also create a situation different from that found in the United States.

The state of the technology is such that some of the environmental problems have known solutions, yet a large amount of research is needed to improve those solutions and find remedies for other problems. It is absolutely false economy to attempt to avoid theeducational and research programs which are necessary. One of the characteristics of underdeveloped countries is that with a short money supply, education and research become the first to suffer since they do not show results which are immediately visible. This is to be contrasted with the U.S. Bureau of Public Roads which has set aside a small percentage of highway funds (which result in a large total contribution) specifically for such programs. Of course, a country like Colombia should carefully avoid duplicating research done elsewhere while concentrating on the unique situations within Colombia.

SUMMARY

This report has concentrated on the environmental effects, specifically landslides, erosion, and sedimentation, involved in the construction of terciary roads in mountainous Colombian terrain. Concern has been expressed elsewhere about the immediate effects --those that occur during orimmediately after the construction and very near to the road. This writer believes that the long range damages --those that are removed in time and space from the construction-- may be economically and socially far more important.

Money saved on the engineering of these roads is false economy. The plans should be made and reviewed by competent engineers who have a concern over the environmental effects. The technology to prevent, or at least minimize much of the damage is known. This technology should be made available to the personnel of the responsible Colombian agencies through the proper educational program. Also a part of the road building funds, probably a large part initially, should be devoted to research programs which are aimed especially at those problems unique or especially acute in Colombia.

ASSIGNMENT OF CASH FLOW BY PROJECTS

Month	Road Starts	No. of Starts	Cash requirements	GOC cash inflow	GOC cash excess or shortfall	Cumulative excess or shortfall	AID cash flow needed	1-2 GOC	1-2 AID	3-5 GOC	3-5 AID	6-8 GOC	6-8 AID	9-11 GOC	9-11 AID	12-14 GOC	12-14 AID	15-17 GOC	15-17 AID	18-20 GOC	18-20 AID	21-23 GOC	21-23 AID
1	0	0	0	0	0	0	0																
2	0	0	0	0	0	0	0																
3	1-2	2	21.6	125.0	103.4	103.4	0	21.6	-														
4	3-5	3	54.0	125.0	71.0	174.4	0	21.6	-	32.4	-												
5	6-8	3	86.4	125.0	38.6	213.0	0	21.6	-	32.4	-	32.4	-										
6	9-11	3	118.8	125.0	6.2	219.2	0	21.6	-	32.4	-	32.4	-	32.4	-								
7	12-14	3	151.2	166.7	15.5	234.7	0	21.6	-	32.4	-	32.4	-	32.4	-	32.4	-						
8	15-17	3	183.6	166.7	- 16.9	217.8	0	21.6	-	32.4	-	32.4	-	32.4	-	32.4	-	32.4	-				
9	18-20	3	216.0	166.7	- 49.3	168.5	0	21.6	-	32.4	-	32.4	-	32.4	-	32.4	-	32.4	-	32.4	-		
10	21-23	3	248.4	166.7	- 81.7	86.8	0	21.6	-	32.4	-	32.4	-	32.4	-	32.4	-	32.4	-	32.4	-	32.4	-
11	24-26	3	280.8	166.7	- 114.1		27.3	21.6	-	32.4	-	32.4	-	32.4	-	32.4	-	32.4	-	32.4	-	16.6	15.8
12	27-29	3	313.2	166.7	- 146.5	-	146.5	11.0	10.6	16.6	15.8	16.6	15.8	16.6	15.8	16.6	15.8	16.6	15.8	16.6	15.8	16.6	15.8
13	30-33	4	334.8	0	- 334.8	-	334.8	- 95.0	95.0	-	32.4	-	32.4	-	32.4	-	32.4	-	32.4	16.6	15.8	16.6	15.8
14	34-37	4	345.6	0	- 345.6		345.6			(-110.2)	110.2	-	32.4	-	32.4	-	32.4	-	32.4	-	32.4	16.6	15.8
15	38-41	4	356.4	166.7	- 189.7		189.7					(-77.8)	77.8	16.6	15.8	16.6	15.8	16.6	15.8	16.6	15.8	16.6	15.8
16	42-45	4	367.2	166.7	- 200.5		200.5							(-62.0)	62.0	16.6	15.8	16.6	15.8	16.6	15.8	16.6	15.8
17	46-49	4	378.0	166.7	- 211.3		211.3									(-46.2)	46.2	16.6	15.8	16.6	15.8	16.6	15.8
18	50-53	4	388.8	166.7	- 222.1		222.1											(-30.4)	30.4	14.7	17.7	16.6	15.8
19	54-57	4	399.6	222.2	- 177.4		177.4													(-29.3)	29.3	16.6	15.8
20	58-61	4	410.4	222.2	- 188.2		188.2															(-16.2)	16.2
21	62-65	4	421.2	222.2	- 199.0		199.0																
22	66-69	4	432.0	222.2	- 209.8		209.8																
23	70-73	4	432.0	222.2	- 209.8		209.8																
24	74-77	4	432.0	222.2	- 209.8		209.8																
25	78-81	4	432.0	0	- 432.0		432.0																
26	82-85	4	432.0	0	- 432.0		432.0																
27	86-89	4	432.0	208.3	- 223.7		223.7																
28	90-91	2	410.0	208.3	- 201.7		201.7																
29	92-93	2	388.8	208.3	- 180.5		180.5																
30	94-95	2	367.2	208.3	- 158.9		158.9																
31	96-97	2	345.6	277.7	- 67.9		67.9																
32	98-99	2	324.0	277.7	- 46.3		46.3																
33	100-102	3	313.2	277.7	- 35.5		35.5																
34	103-105	3	302.4	277.7	- 24.7		24.7																
35	106-108	3	291.6	277.7	- 13.9		13.9																
36	109-111	3	280.8	277.7	- 3.1		3.1																
						TOTALS------		110.4	105.6	165.6	158.4	165.6	158.4	165.6	158.4	165.6	158.4	165.6	158.4	165.6	158.4	165.6	158.4

ASSIGNMENT OF CASH FLOW BY PROJECTS

24-26		27-29		30-33		34-37		38-41		42-45		46-49		50-53		54-57		58-61		62-65		66-69	
GOC	AID	GOC	AID	GOC	AID	GOC	AID	GOC	AID	GOC	AID	GOC	AID	GOC	AID	GOC	AID	GOC	AID	GOC	AID	GOC	AI
20.9	11.5																						
16.6	15.8	22.9	9.5																				
16.6	15.8	16.6	15.8	28.6	14.6																		
16.6	15.8	16.6	15.8	22.1	21.1	38.3	4.9																
16.6	15.8	16.6	15.8	41.9	1.3	43.2	-	43.2	-														
16.6	15.8	16.6	15.8	22.1	21.1	22.1	21.1	41.7	1.5	43.2	-												
16.6	15.8	16.6	15.8	22.1	21.1	22.1	21.1	22.1	21.1	22.1	21.1	41.5	1.7										
16.6	15.8	16.6	15.8	22.1	21.1	22.1	21.1	22.1	21.1	22.1	21.1	22.1	21.1	22.1	21.1								
16.6	15.8	16.6	15.8	22.1	21.1	22.1	21.1	22.1	21.1	22.1	21.1	26.9	16.3	43.2	-	43.2	-						
16.6	15.8	16.6	15.8	22.1	21.1	22.1	21.1	22.1	21.1	22.1	21.1	22.1	21.1	22.1	21.1	29.4	13.8	43.2	-				
(- 4.7)	4.7	16.6	15.8	22.1	21.1	22.1	21.1	22.1	21.1	22.1	21.1	22.1	21.1	22.1	21.1	22.1	21.1	22.1	21.1	33.5	9.7		
		(- 6.7)	(6.7)	22.1	21.1	22.1	21.1	22.1	21.1	22.1	21.1	22.1	21.1	22.1	21.1	22.1	21.1	22.1	21.1	22.1	21.1	30.0	13
			(-	26.5)	26.5	22.1	21.1	22.1	21.1	22.1	21.1	22.1	21.1	22.1	21.1	22.1	21.1	22.1	21.1	22.1	21.1	28.7	14
						(-37.5)	37.5	22.1	21.1	22.1	21.1	22.1	21.1	22.1	21.1	22.1	21.1	22.1	21.1	22.1	21.1	22.1	21.
								(-40.9)	40.9	1.0	42.2	22.1	21.1	17.8	25.4	-	43.2	-	43.2	-	43.2	-	43.
										(- 0.2)	0.2	-	43.2	0.2	43.0	-	43.2	-	43.2	-	43.2	-	43.
												(-2.3)	2.3	43.2	-	22.1	21.1	22.1	21.1	22.1	21.1	22.1	21.
														(-16.2)	16.2	43.2	-	26.9	16.3	22.1	21.1	22.1	21.
																(- 5.5)	5.5	43.2	-	34.1	9.1	22.1	21.
																		(- 3.0)	3.0	43.2	-	30.9	12.
																				(- 0.5)	0.5	43.2	-
																						(- 0.4)	0.
165.6	158.4	165.6	158.4	220.8	211.2	220.8	211.2	220.8	211.2	220.8	211.2	220.8	211.2	220.8	211.2	220.8	211.2	220.8	211.2	220.8	211.2	220.8	211.

ASSIGNMENT OF CASH FLOW BY PROJECTS

72-73		74-77		78-81		82-85		86-89		90-91		92-93		94-95		96-97		98-99		100-102		103-105		106-108		109-111	
GOC	AID	GOC	AID	GOC	AID	GOC	AID	GOC	AID	GOC	AID	GOC	AID	GOC	AID	GOC	AID	GOC	AID	GOC	AID	GOC	AID	GOC	AID	GOC	AID
43.2	-																										
39.7	3.5	43.2	-	-																							
-	43.2	-	43.2	-	43.2																						
-	43.2	-	43.2	-	43.2	-	43.2																				
12.7	30.5	22.1	21.1	22.1	21.1	22.1	21.1	-	43.2																		
15.6	27.6	22.1	21.1	22.1	21.1	22.1	21.1	6.7	36.5	21.6	-																
22.1	21.1	4.9	38.3	22.1	21.1	-	43.2	22.1	21.1	21.6	-	21.6	-														
6.1	37.1	22.1	21.1	22.1	21.1	22.1	21.1	-	43.2	21.6	-	21.6	-	21.6	-												
39.1	4.1	43.2	-	22.1	21.1	22.1	21.1	22.1	21.1	21.6	-	21.6	-	21.6	-	21.6	-										
43.2	-	39.5	3.7	43.2	-	22.1	21.1	22.1	21.1	21.6	-	21.6	-	21.6	-	21.6	-	21.6	-								
(- 0.9)	0.9	24.2	19.0	27.6	15.6	43.2	-	43.2	-	21.6	-	21.6	-	21.6	-	21.6	-	21.6	-	32.4	-						
		(- 0.5)	0.5	40.1	3.1	32.2	11.0	33.1	10.1	21.6	-	21.6	-	21.6	-	21.6	-	21.6	-	32.4	-	32.4	-				
				(- 0.6)	0.6	36.2	7.0	36.9	6.3	21.6	-	21.6	-	21.6	-	21.6	-	21.6	-	32.4	-	32.4	-	32.4	-		
						(- 1.3)	1.3	41.4	1.8	21.6	-	21.6	-	21.6	-	21.6	-	21.6	-	32.4	-	32.4	-	32.4	-	32.4	-
								(- 6.8)	6.8																		
220.8	211.2	220.8	211.2	220.8	211.2	220.8	211.2	220.8	211.2	194.4	-	172.8	-	151.2	-	129.6	-	108.0	-	129.6	-	97.2	-	64.8	-	32.4	-

country:	project no:	project title:	date:		PPT
COLOMBIA		SMALL FARMER MARKET ACCESS	9/1/75	/ X / original / / revision#__	

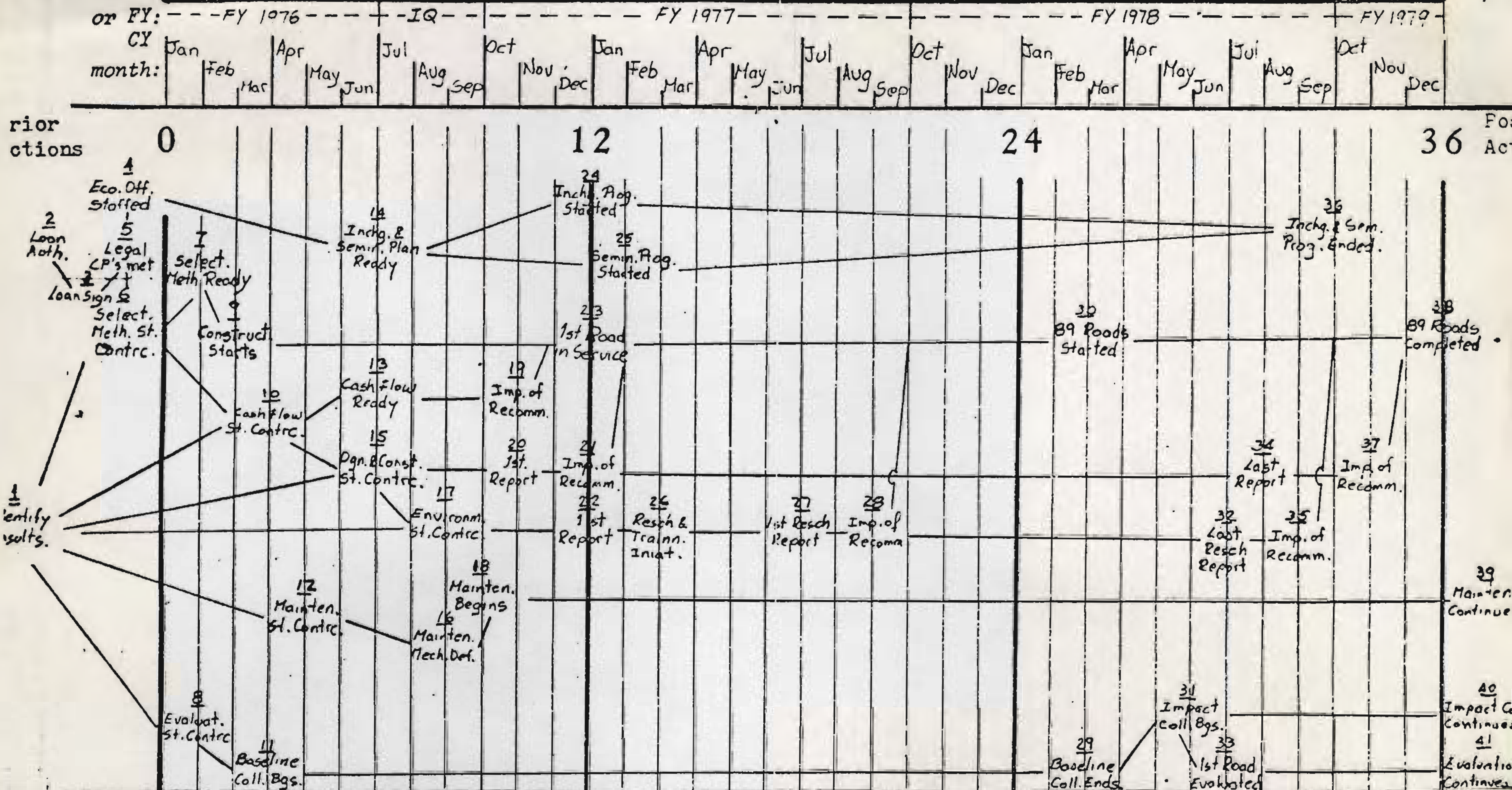

financial plan:	X	282.5 Thousand	X	2803.25 Thousand	X 1,914 Thous
evaluation plan:	X		X		X

PROJECT PERFORMANCE NETWORK

country:	project no:	project title:	date:	/X / original / / revision #	approd:
COLOMBIA		SMALL FARMER MARKET ACCESS	9/1/75		

CPI NARRATIVE

1. 9/8-30/75 Start identifing consultants
2. 9/30/75 Loan authorized
3. 10/30/75 Loan signed
4. 11/30/75 Economic Evaluation Office Staffed
5. 11/30/75 Legal CP's met
6. 12/1/75 Selection Methodology Study Contracted
7. 1/30/76 Selection Methodology Ready
8. 2/1/76 Evaluation Study Contracted
9. 3/1/76 Construction Program Starts
10. 4/1/76 Cash Flow and Budgetary Study Contracted
11. 4/1/76 Baseline Data Collection Begins
12. 5/1/76 Maintenance Study Contracted
13. 5/30/76 Cash Flow and Budgetary Study Ready
14. 6/1/76 Interchange and Seminar Plan Ready
15. 6/1/76 Design and Construction Study Contracted
16. 8/30/76 Maintenance Mechanism Defined
17. 9/1/76 Environmental Study Contracted
18. 10/1/76 Maintenance Program Begins
19. 10/30/76 Cash Flow and Budgetary Recommendations Implemented.
20. 10/30/76 First Design and Construction Report submitted.
21. 12/31/76 First Design and Construction Recommendations Implemented.
22. 12/31/76 Environmental Report Submitted
23. 1/1/77 First Road in Service
24. 1/1/77 Interchange Program Started
25. 2/1/77 Seminar Program Started
26. 3/1/77 Environmental Research and Training Initiated
27. 6/30/77 First Environmental Research Report Submitted.
28. 8/30/77 First Environmental Research Recommendations Implemented.
29. 2/28/78 Baseline Data Collection Ends
30. 3/1/78 89 Roads Started
31. 6/1/78 Impact Data Collection Begins
32. 6/30/78 Last Environmental Research Report Submitted
33. 7/1/78 First Road Evaluated
34. 7/30/78 Last Design and Construction Report Submitted
35. 8/30/78 Last Environmental Research Recommendations Implemented
36. 9/30/78 Interchange and Seminar Program Ended
37. 10/30/78 Last Design and Construction Recommendations Implemented
38. 12/31/78 89 Roads Completed
39. After TDD Maintenance Program Continued
40. After TDD Impact Data Collection Continued
41. After TDD Impact Evaluation Continued