United States General Accounting Office

GAO

Report to Congressional Requesters

May 1986

FOREIGN ASSISTANCE

The Solanda Housing Guaranty Project in Ecuador

GAO/NSIAD-86-120

GAO

United States
General Accounting Office
Washington, D.C. 20548

National Security and
International Affairs Division

B-222302

May 21, 1986

The Honorable Dante B. Fascell
Chairman, Committee on Foreign Affairs
House of Representatives

The Honorable Don Bonker
Chairman, Subcommittee on International
Economic Policy and Trade
Committee on Foreign Affairs
House of Representatives

In response to your requests we reviewed the Solanda Housing Guaranty project in Ecuador, focusing on U.S. Agency for International Development (AID) and host country requirements and decisions for financing, design, and implementation. The Solanda project is the first Ecuadorian government effort to construct housing units which would be affordable to families with incomes below the median income. The project will provide a total of 5,639 housing units and AID's Housing Guaranty loan is providing 28 percent of the total financing for the project.

We addressed (1) the standards and costs of the Solanda project housing units, analyzing costs to determine whether wood products could have improved the project and decreased the costs and (2) the interest rate being charged on Solanda mortgages. We investigated specific allegations that high indirect costs have unnecessarily increased the prices of Solanda units Also, we analyzed the AID-funded wood house demonstration projects in Peru and Ecuador to determine whether using alternative construction materials might improve the Housing Guaranty program's delivery of low-income housing in Ecuador.

Although the Solanda project has had some successes, it has encountered numerous delays and implementation problems mainly because (1) it was too large for the Ecuadorian institutions' administrative capacities and had too many institutions involved, (2) inflation, devaluation and resulting cost increases in Ecuador caused numerous design changes and contracting difficulties, (3) shortages of construction materials occurred, and (4) water, sewer, and electrical systems' contracting and specifications difficulties occurred.

In addition, the construction standards and costs for the Solanda units were too high to be affordable for much of AID's original target population—only those between the 35th and 50th percentiles of income could

afford the units according to AID's income data at that time. However, the use of wood or other building materials, alone, would not have significantly lowered the sales prices of the Solanda housing units. Also, the project would not have been occupied any earlier by constructing the housing units more quickly because water, sewer, and electrical facilities remained incomplete.

Allegations were made to a congressional delegation that, due to AID requirements, indirect costs in Solanda had reached 50 percent. Our investigation showed these allegations to be unfounded.

The interest rate being charged for Solanda mortgages was the lowest charged by Ecuador's Housing Bank as approved by Ecuador's Monetary Board. However, it was too high for the lower strata (about the 35th percentile of income and below) of the Housing Guaranty target group to qualify, given the high construction standards and costs of the units. The Bank determines its lending rates by calculating the weighted average interest of all bank borrowings, including Housing Guaranty and World Bank funds loaned at a maximum of 12 percent and local commercial borrowings at up to 25 percent. This resulted in interest rates ranging between 18 and 21 percent. The lowest rate on Solanda mortgages is 18 percent.

The use of a weighted average for determining interest rates may result in charging higher rates to low-income customers than would be the case if rates were determined independently. It also results in Housing Guaranty and World Bank loans contributing to the availability of subsidized rates to upper income groups. If the Ecuador Housing Bank continues its policy of investing most of its resources in homes for those above the median income, we recommend that the Administrator of AID work with the Bank to retarget its shelter programs to families earning below the median income and to refine current Bank interest rate policy for social interest projects and for projects for families earning above the median income so that low income families do not subsidize higher income families. One approach could involve the Housing Bank (1) separating its investments in below median income from investments in above median income homes and (2) charging different rates of interest for the two separate categories, which would reflect the cost of the resources to the Housing Bank.

Based on our analysis of material costs in the AID-funded wood housing demonstration projects in both Peru and Ecuador, it does not appear that U.S. wood is a viable alternative for housing financed by the

Housing Guaranty program in Ecuador. It does appear that with proper promotion and cooperation with the local industry, U.S. wood could possibly be introduced into the Ecuadorian market for higher income housing. The wood industry representatives we met with favored the idea of cooperating with U.S. wood exporters to develop the Ecuadorian wood housing market. They added that U.S. wood could probably remain competitive in their market for 2 to 5 years; by that time the Ecuadorian industry could standardize and acquire the construction technology to competitively support wood housing demand and eventually overtake the U.S. market share.

Details of our findings are contained in appendix I. A draft of this report was reviewed by AID and its comments were incorporated where appropriate. The full text of AID comments is in appendix II. AID stated that the report findings would be useful in its policy dialogue with the government of Ecuador.

In conducting our review, we met with representatives and reviewed records from AID, the Inter-American Development Bank, the World Bank, and the National Association of Home Builders and the American Plywood Association in the Washington, D.C. area and Washington state. In Ecuador, we met with representatives from AID, the government of Ecuador, and the private sector. We also visited the AID-funded wood housing demonstration project in Peru, and met with U.S. Embassy, AID, and government of Peru officials and some future residents of the demonstration homes.

Unless you publicly announce its contents earlier, we plan no further distribution of this report until 30 days from the issuance date. At that time, we will send copies to the Administrator of AID and to appropriate congressional committees and will make copies available to others upon request.

Frank C Conahan
Director

Contents

Letter		1
Appendix I The Solanda Housing Guaranty Project in Ecuador		6
	Housing Guaranty Program Objectives	6
	Background on the HG Program in Ecuador	6
	The Solanda Project— Successes and Problems	7
	Financing for Solanda and Its Residents	13
	Costs and Sales Prices of Solanda Housing Units	16
	A View to Alternative Building Materials	21
	The AID-Funded Wood Housing Demonstration Project	23
	Conclusions	25
	Recommendation	26
	Agency Comments and Our Evaluation	26
Appendix II Comments From the Agency for International Development		28
Tables	Table I.1: Peru Wood Demonstration House Costs	24
Figures	Figure 1: Timetable of Events (Project Authorization to Solanda Sector I Occupancy)	10
	Figure 2: HG-005 Loan Dollar Flows	14
	Figure 3: Solanda Sector I Direct vs. Indirect Costs	17
	Figure 4: Costs and Sales Prices of Solanda-Sector I Housing Units	20

Abbreviations

AID	Agency for International Development
BEV	Ecuador Housing Bank
GAO	General Accounting Office
HG	Housing Guaranty
JNV	National Housing Board

The Solanda Housing Guaranty Project in Ecuador

Housing Guaranty Program Objectives

AID's Housing Guaranty (HG) program objectives, consonant with the Foreign Assistance Act of 1961, as amended, are as follow.

- Establish and demonstrate replicable shelter solutions affordable for those below the median income (the HG target group).
- Develop systems for financing shelter for the target group with minimum subsidy requirements.
- Develop institutions capable of sustaining a level of production of shelter commensurate with the needs of the population.
- Encourage increased local private sector involvement in low-income shelter construction.
- Prepare comprehensive national housing policies.

As we pointed out in a 1984 report,[1] these objectives represent a fundamental departure from housing policies traditionally pursued by developing countries, which have frequently targeted upper income groups, promoted high construction standards (which lower income families could afford only with large government subsidies) and destroyed rather than upgraded slum areas. The HG program objectives continue to face political and attitudinal obstacles in changing Ecuador's housing policies.

Private U.S. lenders provide HG loans directly to host-country institutions at prevailing U.S. mortgage interest rates. The loans are guaranteed by the U.S. government which usually obtains a host-government guaranty. According to AID officials, these loans must ultimately finance mortgages rather than construction. The projects are completed when the borrower presents proof that it has provided low-income mortgages in amounts equivalent to the HG loan funds.

Background on the HG Program in Ecuador

Since the early 1960's, AID has been helping to develop Ecuador's housing institutions. It helped establish the Ecuador Housing Bank (BEV) and the savings and loan system. AID authorized two HG loans totaling $7.4 million prior to the program's reorientation toward serving families below the median income level in 1973. No new HG loans were authorized until the $20-million Solanda project (HG-005) in 1980. The loan finances 28 percent of the total investment in the project.

[1] AID's Management of the Housing Guaranty Program (GAO/NSIAD-84-75) Apr 25, 1984.

Since 1980, the HG program has authorized another $55 million in housing loans. The most recent loan was authorized in 1984 for $25 million with a $5-million increase in February 1986. A total of $82.4 million in HG loans has been authorized for Ecuador since the program's inception in 1968.

AID's Solanda project proposal was approved in February 1980. According to AID, the $20-million HG loan was, in part, a demonstration of U.S. support for the new democratically elected regime in Ecuador. AID also considered the project concept a great opportunity for a low-income housing experiment. It envisioned bringing together a private foundation (Fundacion Marianna de Jesus) willing to donate a large plot of land in southern Quito and the key public sector housing institutions— the Ecuador Housing Bank and the National Housing Board (JNV)—to complete the project.

The project sought to formally involve the municipality of Quito to ensure the legality and maintenance of the project's infrastructure (urbanization), which consists of water, sewerage, electricity, and streets. Without the municipality's acceptance and approval of these components, there is no assurance that they will be maintained. AID's project concept envisioned constructing an entire community divided into four sectors, with a total of 4,500 houses, complete with community facilities and schools. It was the largest effort undertaken by the BEV/JNV. The project was later expanded to a total of 5,639 housing units.

The Solanda Project—Successes and Problems

Solanda is the first Ecuadorian government effort to construct low-income housing with cost recovery. The units will be affordable to AID's target group of families below the median income[2] but beyond the capacity of families earning below the 35th percentile. However, more of these units will reach lower income groups than those reached by the bulk of BEV/JNV projects which are primarily serving families at and above the median income level.

Through Solanda, progressive low-cost housing design concepts, such as partial housing units, were introduced. According to JNV representatives, some of these low cost designs may be replicated on a small scale in some BEV-financed projects. In addition, some costly construction

[2]AID's target group in Ecuador at the time of our review included those at and below the median income of $233 per month

specifications and standards were reduced as a result of the Solanda project.

However, the project experienced major implementation delays and problems. Although AID authorized the project in February 1980, the implementation agreement was not signed until November 1980, and the loan contract was signed in July 1982. AID initially estimated that Solanda would be completed by September 1983, but the project remained incomplete and unoccupied at the time of our visit in December 1985. Delays, high inflation, and rising interest rates caused sizable cost increases in the housing and infrastructure, ultimately permitting only limited coverage of AID's targeted income group. Also, local housing standards and specifications may have been too high, further adding to costs and delays.

At the time of our visit in December 1985, more than 1,800 housing units had been completed in Sector I, but occupancy was not permitted because the water and sewer systems were not completed, which caused concern over creating a health hazard. The water/sewer lines and household connections for Sector I were being completed at the time of our review, sales prices had been set by the BEV, and the units were being allocated to the future residents. Occupancy is expected to take place gradually between March and June 1986. Sectors II through IV are expected to be completed by July 1986, including household connections for water, sewers, and electricity.

We identified the following implementation problems and delays.

1. The project was too large for the institutions' administrative capacities and involved too many institutions.

2. Inflation required numerous design changes and led to contracting difficulties.

3. Construction materials shortages occurred.

4. Infrastructure contracting/specifications problems occurred.

In some cases, delays in various aspects of the project were overlapping and precise time frames could not always be determined. Therefore, each factor's contribution to overall project delays could not be clearly determined.

Project Concept—A Key Factor in Solanda's Administrative Problems

Solanda received the first HG loan in Ecuador intended to reach families below the median income and AID programmed a large loan for this experiment. The project designers envisioned a large, complicated, integrated project involving five primary and three secondary implementing institutions. Three additional entities had to approve project contracts and imports, such as steel and metal pipe. Coordination, agreement, and approval were required from each institution at every phase of the project. As discussed in the following sections, the involvement of so many institutions caused considerable delays.

In retrospect, both AID and Ecuadorian government officials considered the project too large for the administrative capacities of the responsible organizations. They also believed that too many institutions were involved to permit implementation without serious difficulties.

Implementation Decisions, Problems, and Delays

AID authorized the Solanda project in February 1980 but the first construction contract was not signed until December 1982. It took close to 3 years to lay the administrative groundwork for the project. Then, contracting and construction problems further hampered implementation. The key events during the 6 years between AID's project authorization in February 1980 and the anticipated arrival of Solanda's first residents in March 1986 are shown in figure 1.

Figure 1: Timetable of Events (Project Authorization to Solanda Sector I Occupancy)

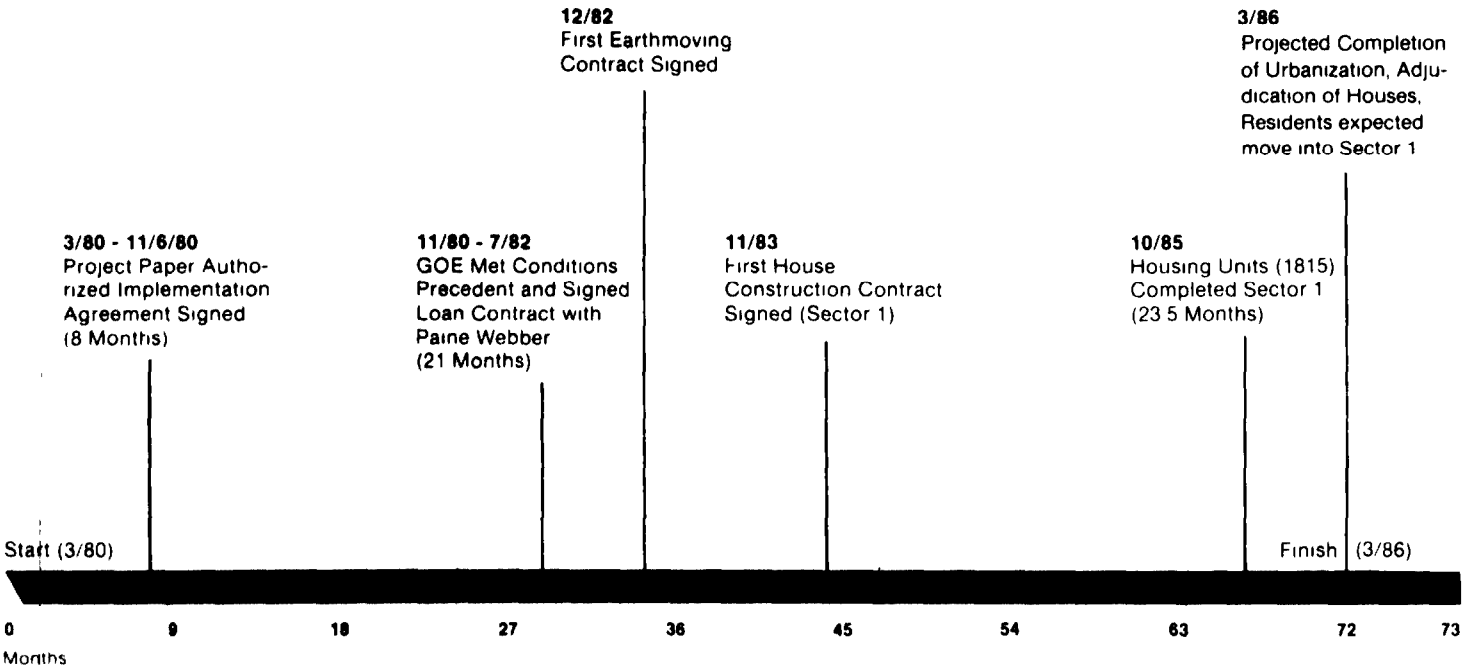

In laying the administrative groundwork for Solanda, AID's project implementation agreement required that Ecuador meet 10 conditions precedent before the BEV could seek a lender. Many of AID's conditions required the Ecuadorian institutions— primarily the JNV, the BEV, the municipality of Quito, and the private foundation—to coordinate and approve plans, costs, and specifications and to reach agreements on providing infrastructure.

As figure 1 shows, once the implementation agreement was signed in November 1980, Ecuador took 21 months to meet all the conditions and to sign a loan agreement with Paine Webber, a private U.S. lender, in July 1982. According to AID records, the number of institutions involved and government administrative procedures made coordination and agreement on these key issues difficult.

Within that 21 months, a key delay occurred in transferring the title for the land from the private foundation to the BEV; until the BEV received the title, no construction could take place. According to AID and other

sources, because of a strike in the private foundation and the foundation's concerns over retaining some authority in the project, the title was not transferred until December 1981—13 months after the implementation agreement was signed. In addition, it took 19 months for the municipality and the JNV to approve housing unit plans, costs, and specifications and for the municipality and the BEV to agree to provide potable water and sewage systems.

Inflation Caused Design Changes

While housing unit designs for Solanda existed as early as 1980, inflation caused five separate design changes in attempts to satisfy all the involved organizations and the AID requirement for reaching those families below the median income. According to Ecuadorian government officials, in 1980 the private foundation had developed 17 different housing unit design types for the project. In late 1981, after a year of 16-percent inflation, in efforts to bring down the costs of the units and reach the HG target group, the JNV, with AID involvement, reduced the size of the units and the number of designs from 17 to 8.

Inflation in Ecuador drove construction materials and labor costs up so high that the least expensive unit design developed in 1980, which was then affordable to those at the 10th income percentile, was unaffordable to AID's target group in 1982. During 1983, 48-percent inflation forced additional design changes for Sectors II through IV.

Decisionmaking in Unit Designs

According to JNV and AID records and officials, a number of cost, cultural, and political factors were involved in the decisionmaking for both the designs and the materials used to build the housing units. AID's primary concern was to reach the target groups from the lowest possible income levels for the project.

Ecuador housing typically uses masonry construction materials. A number of alternative construction systems, e.g., prefabricated housing, were studied and considered for Solanda but dismissed. In addition, during the initial stages of the project, a JNV study concluded that the clay tiles produced by the BEV-owned factory were competitively priced with various locally produced construction materials. Another impetus for using the clay tiles, according to JNV representatives, was the need for contracts at the BEV factory. Employment considerations also drove the government of Ecuador toward the decision to use traditional masonry construction, which requires more, but less expensive and less skilled, labor than other types of construction.

Given these factors, the JNV, the private foundation, and AID responded to rising costs by reducing the sizes and some standards in the housing units. Partial housing units, such as the floor-roof and sanitary core units, were also introduced, lowering costs further by eliminating walls and permitting less costly self-help construction. The Solanda project was subject to local standards and specifications which may have been inappropriate; for example, costly windows and doors were used when less expensive alternatives were available. However, efforts were made to reduce standards for the roofing system and the structural columns. Expensive reinforced concrete slabs were replaced with a roofing system using corrugated metal, and the thickness of reinforced steel used in structural columns was reduced.

Contracting and Construction Difficulties

The JNV encountered numerous difficulties in contracting and executing construction work on the Solanda project. For example, figure 1 shows that in Sector I, although construction contracts were signed in November 1983, the units were not completed until October 1985 because of lengthy contracting delays and shortages of building materials. According to JNV representatives, without these difficulties actual construction time would have been about one year. These problems affected the other sectors as well.

According to government officials and documents, Ecuador enacted a law in March 1983 requiring a price readjustment formula on construction contracts in response to Ecuador's inflation and devaluation difficulties. Ecuadorian legal requirements and contracting procedures have traditionally been cumbersome, but the new formula led to further delays; for example, the bidding process for construction contracts in Sector I began in February 1983, but the contracts were not signed until November 1983 because the JNV and the Controller General of Ecuador had problems incorporating the readjustment formula into the contracts. The water system contract for all four sectors was delayed for about 8 months for the same reason.

Although approximately 90 percent of the project materials are locally produced, during 1984 the government experienced shortages in a number of essential materials that normally had to be imported. These included reinforced steel for unit construction, transformers for the electrical system, pipes for the potable water system, and fittings for the sewer system. According to AID and Ecuadorian government officials, Ecuador's procedures for limiting imports to conserve foreign exchange made importing difficult. They stated that imports had to be approved

by the Ministry of Commerce and Industry and the Central Bank's Monetary Board. As a result of shortages in water pipes and steel and time-consuming import procedures, water system and housing unit construction were delayed.

A shortage of locally produced hollow clay tiles used in constructing the housing units also occurred. The basis, in part, for using this material during the initial phase of the project was the availability of production capacity at this factory. However, in part because of labor problems, the plant was unable to keep pace with the tremendous demand created by the Solanda project. In addition, prices on the tiles increased, and the decision was made to substitute less expensive concrete block, which was in abundant supply, for Sector IV housing units.

Problems in Infrastructure Contracting/Specifications

According to Ecuadorian government officials, Quito's high standards and specifications for infrastructure construction caused further delay; for example, the initial design specifications of the sewer system required sophisticated pumps and pneumatic tubes, which were found to be relatively costly. Design specifications had to be modified to reduce costs and resubmitted to the sewer authorities for approval. Because of deficient electrical poles, delays of approximately 18 months occurred in installing the electrical distribution system. The contractor had to make three separate revisions before meeting the standards.

Financing for Solanda and Its Residents

The $20-million loan which helped to finance Solanda was made to the BEV by Paine Webber at a variable interest rate. The dollars are disbursed to and paid back by the Central Bank of Ecuador. (See fig. 2.) The Bank re-loans the money in sucres[3] to the BEV at a variable interest rate, with a ceiling of 12 percent established to capitalize the BEV. The Central Bank has assumed the foreign exchange risk for the loan, and if the U.S. interest rate exceeds 12 percent, the Bank absorbs the difference.

All but a $6-million advance has been held in an interest-bearing escrow account since July 1982. Until the BEV presents proof that it has provided Solanda mortgages in sucres in amounts equivalent to HG funds, the dollars will not be disbursed from escrow. As a result, the Central Bank has been paying interest on the HG-005 loan while it has not had use of the dollars for nearly 4 years. On the other hand, it has been

[3]The exchange rate used in this report is 120 sucres to U S $1 00

earning interest from the escrow account ($4.1 million as of Sept. 1985) that can be used to service the Paine Webber loan. According to AID, Ecuador elected to sign the loan contract for the entire $20 million early on, although it conceivably could have contracted for only a portion of the $20 million in 1982 and/or waited until the project was nearly ready for occupancy.

Figure 2: HG-005 Loan Dollar Flows

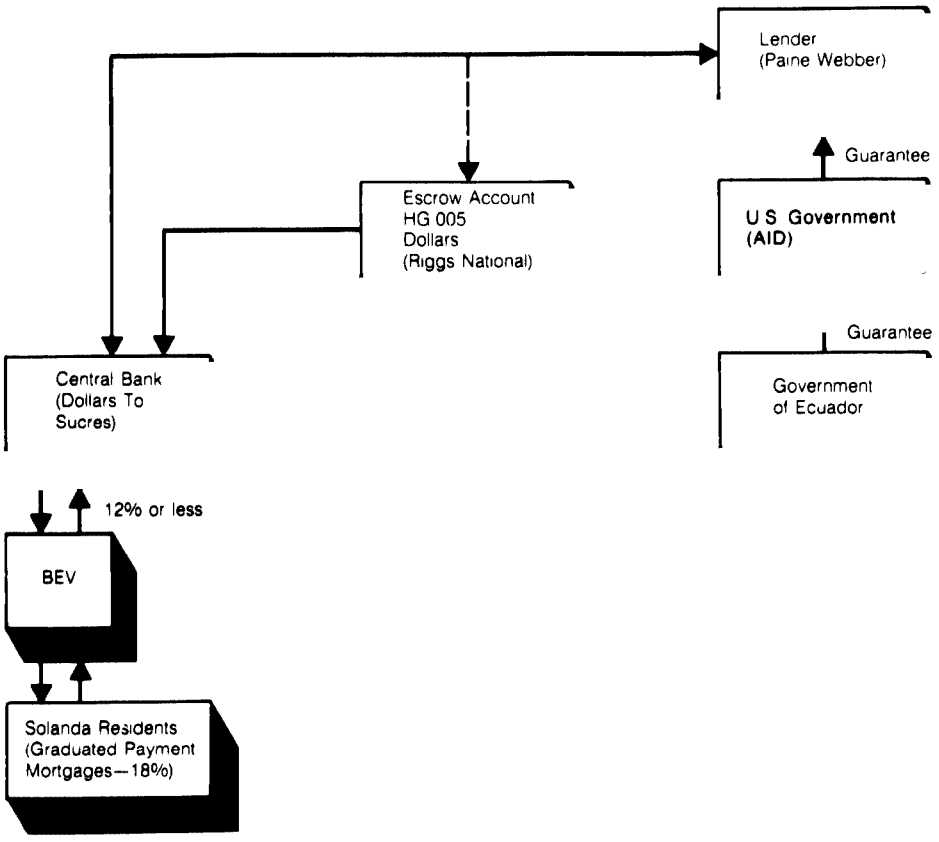

Solanda Residents Pay 18 Percent Interest

As indicated in figure 2, the BEV pays 12 percent or less for the Solanda HG loan resources but will be charging Solanda residents 18 percent for their mortgages. According to documents and discussions with AID and Ecuadorian government officials, this is because the BEV charges between 18 and 21 percent interest on all its mortgages, depending on

the sales prices of the houses[4] in Ecuador. These rates represent negative real rates of interest as they do not fully compensate for inflation. The BEV rates are approved by the government Monetary Board and are based on the weighted average cost of all BEV borrowings, including those borrowed on the local commercial market for as much as 25-percent interest. The BEV policy, as well as HG program policy, is to charge a rate of interest for mortgages that will prevent decapitalization (erosion of the financial integrity) of the housing bank and thereby minimize the need for subsidies which the Ecuadorian government cannot afford. The HG-005 loan finances only 28 percent of the total investment in the Solanda project, and although the loan is costing the BEV 12 percent or less, the other resources the BEV invested in Solanda were borrowed at a higher interest rate. However, the 18-percent rate, even with a graduated payment scheme and optional down payment, will not permit the lower strata of Ecuadorian income levels to qualify for Solanda as originally intended. AID officials estimated that the units will reach only those between the 35th and 50th percentiles of family income levels. According to a July 1980 AID Shelter Strategy Statement on Ecuador, AID's goal was to provide shelter units reaching between the 20th to 50th percentiles of family income, with special efforts made to lower the range to the 10th percentile.

Our review was limited to the Solanda project. We did not determine the Bank's overall cost of money. However, we observed that, overall, the BEV continues to invest in housing largely for families above the median income. The BEV charges a maximum of 21-percent interest to these families, even though it must borrow on local markets at up to 25 percent. In contrast, HG and World Bank lower interest rate funds (plus BEV counterpart funds) to finance low-income housing projects are available at 12 percent or less. Thus, when the BEV interest rates are determined by using a weighted average, the HG and World Bank lower interest loans could result in a distortion of the interest rate required to recover costs. It could, in effect, result in an interest rate charged to low-income applicants above that required to recover costs. It could also help to decrease the mortgage interest rate the BEV applies to its above-median-income projects, especially if BEV continues to finance housing for families earning above the median income level.

[4]Income criteria are also being used for the Solanda project The BEV interest rate for low-income housing has increased twice since 1980 from 12 percent to the current 18 percent

Why Lower Mortgage Interest Rates Are Available Elsewhere

Congressional concerns were raised over the fact that lower mortgage interest rates were available to wealthy groups through Ecuador's Social Security Institute than the BEV would be charging lower income Solanda residents. According to AID, the lower rate charged by the Social Security Institute is available only to those paying into the social security system. Solanda residents who are eligible for social security mortgages, however, must borrow from the BEV at the higher interest rate for Solanda homes. Social security participants include a broad range of income levels but greater benefits flow to those at higher income levels. A World Bank study noted that the Social Security Institute is decapitalizing partly because it subsidizes the mortgage-lending portion of its investment portfolio; it is unclear how much longer it can continue offering subsidized rates.

Costs and Sales Prices of Solanda Housing Units

At the time of our fieldwork, only Sector I of Solanda had all expenses formally submitted, accepted, and accounted for by the BEV's liquidation department. Until formal liquidation of a project occurs, no final sales prices for housing units can be determined. Solanda sales prices are determined on a cost-recovery basis (direct and indirect costs). Because the other sectors were initiated later, may be completed more quickly, and include more partial housing units, their sales prices and direct and indirect costs could differ from those in Sector I.

As shown in figure 3, direct costs for Sector I, excluding the cost of donated land, were 74 percent and indirect costs were 26 percent (financial charges represented 19 percent and administrative costs represented 7 percent).

Figure 3: Solanda Sector I Direct vs. Indirect Costs

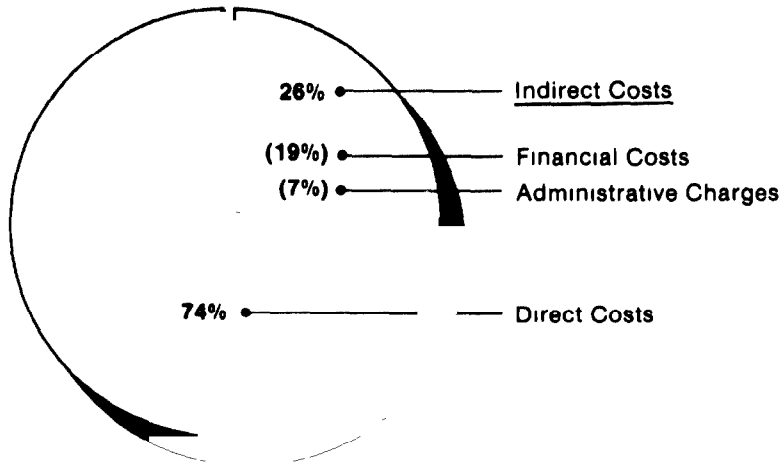

Note Direct costs include those for urbanization (water, sewer electricity streets) land movement/ preparation housing unit (including slab, structure, roof, windows, doors and plumbing fixtures for one bathroom and one kitchen) Direct costs do not include land, which was donated or community facilities planned for Sector I

Indirect Costs in Solanda

Allegations were made to a congressional delegation that due to AID requirements, indirect costs in Solanda, had reached 50 percent. Our investigation showed these allegations to be unfounded. Sector I was the only liquidated portion of the project for which final indirect cost figures could be obtained and, as figure 3 shows, they amounted to 26 percent. We found that indirect costs of 50 percent were accumulated only on the infrastructure for Sector I.

The President of the JNV/BEV indicated that high administrative costs were due to AID's requirement that an implementation unit be formed within the JNV to manage the project. According to AID files, in 1981 Ecuador proposed forming an implementation unit and AID agreed, thinking that the unit might facilitate implementation.

BEV personnel explained that for Solanda, unlike other BEV projects, the BEV accumulated actual administrative expenses (including the entire cost of the JNV's Solanda implementation unit) in the administrative costs accounting each month. The actual administrative costs were

greater than the 10-percent ceiling imposed by Ecuadorian law. However, because of Ecuadorian legal limits, they were not fully included in the sales prices of the houses.

According to the BEV, the method for applying indirect costs (financial and administrative) to all BEV/JNV projects is set forth in Ecuador's laws and regulations. Financial and administrative costs are charged from the date of the first expenditure until the project is liquidated. Using the monthly cumulative investment, the BEV charges its prevailing interest rate as financial costs. Currently, since the BEV rate is 18 percent, its monthly charge is 1.5 percent. Similarly, the BEV calculates 10 percent for administrative charges on the accumulated balance of investment. Actual indirect costs vary from the standards because of the length of time it took to complete Sector I.

Direct Costs and Sa es Prices

In further analyzing the costs and sales prices in Solanda's Sector I, we focused on the three lowest cost housing units. Each of the units is constructed on a 61 square meter urbanized lot. The sanitary core unit with a sales price of $2,717 and 9 square meters of space includes a partial slab, bathroom, kitchen, and roof. The floor-roof unit, with a sales price of $3,258 and 28 square meters of space includes a complete slab, bathroom, kitchen, columns, and roof. The basic core unit with a sales price of $3,633 and 28 square meters of space includes all that this floor-roof unit provides, plus walls; it is a completed unit which can be expanded.

The costs and sales prices of these three units are shown in figure 4. With indirect costs of 26 percent and direct costs of 74 percent, figure 4 shows the shares of direct costs, which include urbanization and housing unit construction, in the sales prices and housing construction costs and their principal components—labor, materials, and contractor overhead.

Urbanized Lots Are Expensive

As shown in Figure 4, infrastructure land preparation costs were over $1,100 for each housing unit. These costs are high because of Ecuador's high standards and specifications for constructing water and sewer lines and the topography of the Solanda site. JNV officials explained that metal rather than plastic pipe was required for most of the project, which increased costs. Due to the site topography, a gravity fed sewer system was not feasible, and expensive, sophisticated pumps and pneumatic tube were required.

Impact on Unit Costs If Wood Were Used

We analyzed the costs and sales prices of three types of housing units to determine whether different construction materials would have reduced costs and house sales prices. Figure 4 breaks down the direct costs of the three types of houses and illustrates the share of each major component in the final sales prices. Housing unit costs include labor, slab, structure, roofing, plumbing, fixtures, wiring, windows, and doors. Based on JNV data, labor costs are generally 32.5 percent of construction costs, materials are 57.5 percent, and contractor overhead is 10 percent. However, when considering these factors in total costs and final sales prices, their significance is reduced considerably. In analyzing Solanda house material costs in terms of qualifying lower income families for mortgages—a HG program objective—we found that using different materials would not have made a significant difference.

Figure 4: Costs and Sales Prices of Solanda-Sector I Housing Units

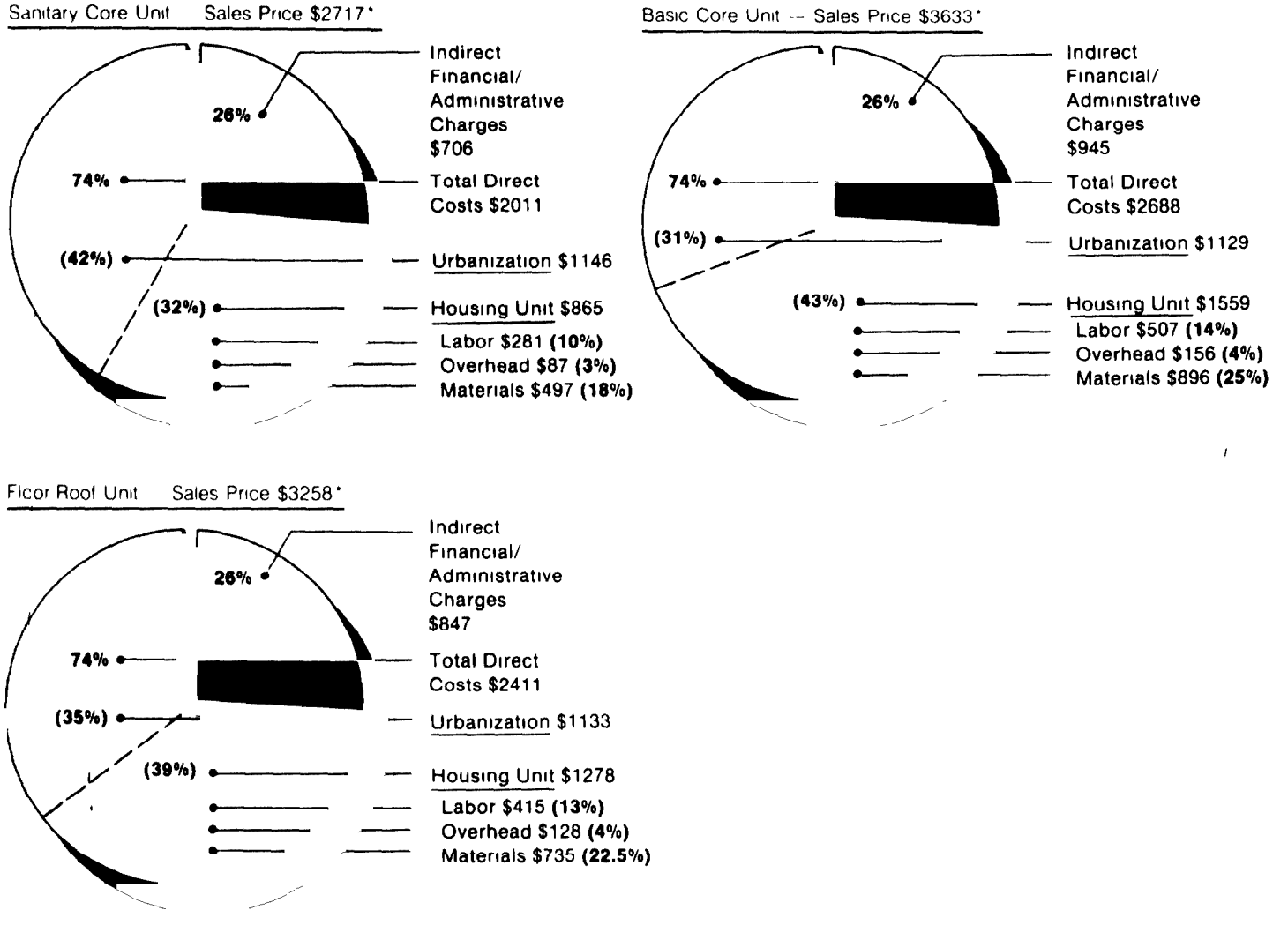

* Exchange rate of 120 sucres per dollar US

Note Totals may not add due to rounding Percentages in parentheses represent share of total sales price for the item Materials include slab structure plumbing windows and doors and roof Prices do not include cost of donated land

Because of data limitations, we were unable to determine whether wood is actually less expensive than masonry materials in Ecuador. However, we conducted a hypothetical analysis to determine what effect the use of wood might have had on the sales price of a basic core unit in

Solanda. In our analysis, we assumed all other costs (i.e., indirect and infrastructure) were equal. This is valid for Sector I of Solanda, since the infrastructure was completed long after the units were constructed and the use of wood would have had no effect on these aspects of the project.

House construction materials comprised only 25 percent of the final sales price of a basic core unit ($3,633 in Sector I). According to the JNV, roughly 15 percent of a unit sales price was attributable to the costs of plumbing, fixtures, windows, roof, and slab, which would be standard for housing constructed of any material. The other 10 percent of the sales price comprised masonry walls and reinforced cement columns, which would be altered by a change to wood.

By changing construction materials from masonry to wood for this 10 percent of the sales price, and if 30 percent could have been saved in exterior construction materials for a completed unit, only about a 3-percent reduction in the sales price or about $109 in savings would have resulted. According to Ecuadorian construction experts, any labor savings resulting from fewer workers and/or shorter construction time by the use of wood would likely be offset by the greater pay required for the more highly skilled labor needed in wood construction. Finally, local wood industry representatives told us there were not enough skilled carpenters in Ecuador for a project the size of Solanda.

A View to Alternative Building Materials

To examine the potential for using wood as an alternative building material in Ecuador, we questioned whether (1) wood generally, and U.S. wood specifically, is a viable alternative for housing construction in Ecuador and (2) wood is a viable alternative for HG financed housing. We considered costs, cultural acceptability, and climatic conditions and interviewed local wood industry representatives, architects, and civil engineers.

Local Attitudes Toward Wood Housing

Historically the people of Ecuador have used wood as a building material. We observed during an architect's tour of "old Quito" that wood was used extensively in flooring, roofing, and structural beams. The historic Spanish churches similarly used wood. Along the Ecuador coast, people have traditionally accepted wood as a building material. However, wood is now largely used for decorative purposes, and masonry is preferred for the main structure.

While some Ecuadorian architects and engineers still consider wood housing to be in many ways technically superior to masonry, there has been both cultural and institutional resistance to its use. Culturally, the people consider wood structures impermanent and associate wood with slums and shantytowns. Many Ecuadorians believe that wood housing does not provide security, is colder than masonry, and can easily catch fire. People also fear that termites and other pests will destroy their investment. According to a wood industry representative, few architects within the JNV have any experience in wood construction. He further stated that the strong cement lobby has undercut efforts at promoting wood construction

Wood Versus Masonry

Although we were unable to obtain comparative costs for wood and masonry houses, Ecuadorian wood industry representatives, engineers, and architects raised some points on cost considerations for constructing both types of housing. For example, local wood industry representatives stated that there are not enough skilled carpenters currently available to construct a wood housing project on the scale of Solanda. Construction experts also cautioned that the skilled labor needed to build wood housing is more expensive than the unskilled labor used in traditional masonry housing construction. Some construction experts also pointed out that since wood requires more maintenance than masonry housing, it is more expensive to the buyer in the long run.

According to the American Plywood Association, one advantage wood has over masonry is its staying power during earthquakes. However, a cost disadvantage is that treatment is required for wood housing in areas throughout Ecuador since both coastal and mountainous areas are susceptible to various pests and fungi.

U.S. Versus Local Wood

According to a local wood products analyst, Ecuadorian lumber can cost up to three times more than U.S. lumber. In addition, treating Ecuadorian wood against fungus and pests would add another 10 to 30 percent to its costs. The Ecuadorian industry is not currently producing exterior-grade plywood, but it does export certain types of plywood to the United States and other countries. However, local industry representatives told us that if a demand for exterior plywood materialized, the industry could meet the demand simply by changing the glue used in its production process.

On the surface, the higher cost of Ecuadorian wood and the industry's current lack of capacity for producing exterior-grade plywood indicates there may be a market for U.S wood. However, transportation and insurance costs and import duties and surcharges must be added to the base U.S. wood price to make a valid cost comparison

The wood industry representatives we met with favored the idea of cooperating with U S wood exporters as a means of developing the Ecuadorian wood housing market They added that U S. wood could probably remain competitive in the Ecuadorian market for 2 to 5 years, by that time the Ecuadorian industry could standardize and acquire the construction technology to competitively support wood housing demand and eventually overtake the U.S. market share. The representatives emphasized that the cultural resistance to wood housing must first be overcome by exposing the Ecuadorian people to attractive, well-built wood housing. They believe that if wood were strongly promoted, additional skilled labor provided, and the cut of local lumber standardized, wood housing would be in greater demand

The AID-Funded Wood Housing Demonstration Project

The U.S. wood industry and several Latin American and Caribbean countries had a mutual interest in promoting low-income wood housing through demonstration. In early 1985, AID provided the American Plywood Association a $350,000 grant with funds from its Trade and Development Program ($200,000) and the HG program ($150,000) for wood demonstration houses in Ecuador, Peru, Chile, Barbados, Jamaica, the Dominican Republic, and Guatemala All but two demonstration housing units were to be low-income houses.

We analyzed costs of the demonstration units in Peru and Ecuador to provide a basis for comparison beyond the Solanda project and to determine whether these units could be built inexpensively enough to qualify for HG financing. Our cost analyses of these units showed that the houses would not be affordable to the wealthiest of the HG target group without subsidies.

Based on AID, U.S. Embassy, and our observations, the wood demonstration houses we visited in Peru—located across the highway from the beach north of Lima—were extremely well received by the Peruvians. However, representatives of the Departments of Commerce and Agriculture noted that U S. wood housing is not likely to be able to reach the low income HG target group without using subsidies and lowering/eliminating Peruvian import duties. Although the houses were completed in

July through August 1985, they were to remain unoccupied until March and April 1986, when loan applications would be processed.

We spoke with some of the future residents of the wood houses who had won the right to buy them in the subsidized Peruvian housing lottery. In signing up for the lottery, the future homeowners had selected the wood houses over the brick homes in the same development without having seen the homes. One future owner stated that he prefers wood architecturally. Another said that he favored the notion of living in a North American style wood cottage on the beach.

The lottery houses in Peru were sold at a highly subsidized price—about $2,857, while the maximum affordable to the HG target group is $2,411. AID estimated the value of the urbanized lot in this particular development at $3,000, largely because of its location and extremely high standards and costly facilities. Based on AID, American Plywood Association, and government of Peru data, we estimate that without subsidies the wood houses would have sold for more than $11,531, excluding import duties and financial and administrative costs, as shown in table 1.

Table I.1: Peru Wood Demonstration House Costs

Materials including shipping/insurance	$ 5,918
Urbanized lot (estimated)	3,000
Slab	903
Labor, tools, security	857
Transportation port-to-site, customs dispatch	667
Indirect costs (publicity)	186
Total	**$11,531**

The demonstration project in Ecuador initially involved donated materials for six low-income and two middle-income wood houses. The American Plywood Association told us that each package of materials for the low-income houses was valued initially at $1,564[5]. However, at Ecuador's request, the packages were replaced with materials for six larger, better built, and more costly houses valued at $3,185 each[6]. The lower income units were replaced with a costlier package as part of a marketing strategy. The strategy was that the lower income groups

[5]This excludes transportation, insurance, duties, land, plumbing, fixtures, wiring, slab, labor and infrastructure

[6]This excludes transportation, insurance, duties, land, plumbing, fixtures, wiring, slab, roof materials, labor and infrastructure

would be more receptive to the units if they saw upper income families living in them and that standards and costs could subsequently be lowered to reach the lower income groups.

The larger units, which we estimate cost more than $12,594, would not be affordable to the wealthiest of the HG target group. We estimate that the "$1,564 low income house" would have actually cost $7,196, excluding transportation and duties; the maximum sales price a HG loan can finance in Ecuador is $5,313. This is also $3,563 higher than the most expensive unit design promoted by AID for Solanda—the completed basic core unit.

A recent internal World Bank study paralleled our findings on the Solanda project and concluded that from the vantage point of improving the delivery of low-cost housing, building materials account for approximately only 30 percent of all housing costs worldwide. Thus, actions taken to lower the cost of materials may not bring about a significant reduction in total costs.

Conclusions

The $20-million Solanda project will provide low-income housing with cost recovery for the first time in Ecuador. It also introduces progressive housing unit designs and reduces some costly construction standards. However, because standards, costs, and interest rates remained high or increased, the housing units will not reach the lower strata of the HG target group as originally intended.

Many implementation problems and delays were encountered because (1) the project was too large for the institutions' administrative capacities and involved too many institutions, (2) inflation resulted in numerous design changes and contracting difficulties, (3) construction materials shortages occurred, and (4) infrastructure contracting and specifications problems occurred.

Use of wood or other building material for the Solanda project would not have significantly lowered the sales prices of the housing units. In addition, even had wood been used to more quickly construct the housing units, the project would not have been occupied any earlier because Solanda's water, sewer, and electrical facilities remained incomplete.

Wood does not appear to be a viable building material alternative for HG-financed housing projects if the program is to continue to reach families below median-income levels, promote local private sector involvement,

and pursue cost-recovery policies with developing countries' housing institutions. If a demand for wood housing was generated in Ecuador, local industry representatives believe they could soon competitively meet the demand.

The HG program policy is to encourage housing banks to charge interest rates that avoid decapitalization and thereby minimize the need for subsidies. The BEV determines its lending rates by calculating the weighted average interest rate of all bank borrowings, including lower interest HG and World Bank loans, and local borrowings at up to 25 percent. This resulted in housing bank interest rates ranging between 18 and 21 percent.

If the BEV continues its policy of investing most of its resources in homes for those above the median income, the use of the weighted average could cause distortions that result in charging higher rates to low-income customers than would be the case if rates were determined independently. It also results in HG and World Bank loans contributing to the availability of subsidized rates to upper income groups.

Recommendation

We recommend that, if the Ecuador Housing Bank continues its policy of investing most of its resources in homes for those above the median income, the Administrator of AID work with the Bank to retarget its shelter programs to families earning below the median income and to refine current Bank interest rate policy for social interest projects and for projects for families earning above the median income so that low-income families do not subsidize higher-income families. One approach could involve the Bank (1) separating its investments in below median-income from investments in above median-income homes and (2) charging different rates of interest for the two separate categories which would reflect the cost of the resources to the Bank.

Agency Comments and Our Evaluation

AID stated that our report and its findings will be useful for the AID policy dialogue with the Ecuadorian government. AID also considered our recommendation useful in its attempts to achieve its policy goals with the government. However, AID suggested changes in the recommendation's language to address the need to work with the BEV to retarget its shelter programs to below-median-income families and to refine BEV interest rate policy. We agree with AID on the need to work with the BEV to retarget its shelter programs and refine interest rate policy. We believe that our recommendation, as revised, will provide AID and the

BEV with a mechanism to insure that below-median-income families do not subsidize the housing costs of higher-income groups. Also, our recommendation will permit AID's identification and tracking of the BEV's commitment and resource allocation to low-income housing.

AID comments pointed out that an "underlying intention" of the Solanda project was to recapitalize the BEV, although this was not stated in project documentation. AID stated that the 12-percent loan for Solanda was a one-time action to recapitalize the BEV, and therefore, by implication, the distortion created in BEV lending was likewise a one-time occurrence. Although one AID loan was given to the BEV for the Solanda project, the World Bank has provided another low-interest loan to support low-income housing in Ecuador; it is possible that Ecuador may be getting additional loans. Therefore, we believe the problem we identified with BEV's interest rate calculations could continue to effect the affordability of housing.

Additional specific AID comments have been incorporated into the report where appropriate.

Comments From the Agency for International Development

UNITED STATES INTERNATIONAL DEVELOPMENT COOPERATION AGENCY
AGENCY FOR INTERNATIONAL DEVELOPMENT
WASHINGTON D.C. 20523

THE ADMINISTRATOR

April 22, 1986

Dear Mr. Conahan:

This letter is to respond to your letter of April 7, 1986 and the Draft GAO Report to Congressman Bonker entitled The Solanda Housing Guaranty Project. I wish to thank the GAO for a balanced report on a complicated topic. As the report notes, the Solanda Project is the first low-income shelter program carried out in Ecuador which stresses cost recovery. The report will be of great help to us in our continuing policy dialogue with the Government of Ecuador on the shelter needs of its people.

Attached to this letter are specific comments on the Draft Report.

Sincerely,

M. Peter McPherson

Attachment:
Comments on the Draft Report

Mr. Frank C. Conahan, Director
National Security and International
Affairs Division
U.S. General Accounting Office
441 G Street, N.W.
Washington, D.C. 20548

April 10, 1986

MEMORANDUM

The purpose of this memorandum is to respond to the draft report The Solanda Housing Guaranty Project prepared by the General Accounting Office. The following are our observations:

1. The effort the GAO has made to unravel information on costs and on the implementation of Solanda is to be congratulated. It will prove to be a useful document in AID's policy dialogue with the Government of Ecuador (GOE) regarding urbanization and construction standards. It will also assist in our work with high level government officials to assess their shelter needs and target their responses accordingly. To achieve the above policy goals will redirect the GOE's investment in housing and resolve the issue your recommendation addresses. It is also important to point out that the underlying intention of the Solanda project with regard to the Ecuadorian Housing Bank (BEV) was to capitalize the BEV to be able to respond to Ecuador's growing shelter needs without becoming a drain on the fragile GOE budget. In support of BEV's capitalization AID agreed to have the HG resources in local currency made available to the BEV through the Ministry of Finance at 12% thereby creating a spread between the BEV's cost of funds (12%) and its lending rates (18%) as established by Ecuador's Monetary Board. This spread was a one-time opportunity available to the BEV that may have created a distortion as you report. However, recent borrowings by BEV at a higher market oriented rate reflect the true cost of resources in the country.

2. Specific comments relate to statements in the draft letter to Congressman Bonker and throughout the draft report on the affordabilility of the different Solanda units to the target population. It is suggested that the language reflect the fact that families earning below the 35th percentile were for the most part unable to qualify for a Solanda unit, but the units were affordable to families earning below the 50th percentile, AID's target group. Statements occur in the draft letter to Congressman Bonker on page 2 and in the report on pages 10, 11, 24, and 42. Specific language is suggested to clarify this point and other issues in Section 4.

Now on pp 6, 11, and 25

3. We would also like to clarify the point made on page 11 concerning the extension of the project completion date. It is the grant program that provides technical assistance to the Housing Guaranty funded Solanda project that has been extended to maintain a level of resources available to the post-occupancy activities to be carried out by the private sector Mariana de Jesus Foundation.

4. The following specific comments to the draft GAO Report are keyed to the numbered pages of the draft letter to Congressman Bonker and the GAO Report.

Letter to Congressman Bonker

P. 2 - Suggested language to replace the second paragraph is:

"In addition, the costs of Solanda units were within AID's target group of below the 50th percentile but appeared to be unaffordable for those families earning below the 35th percentile, according to income information available at that time."

P. 2 - Suggested language to replace the third paragraph continuing onto page 3 is:

"The interest rate being charged for Solanda mortgages was the lowest charged by Ecuador's Housing Bank (BEV) of 18% as established by Ecuador's Monetary Board. The constructive standards and size of the more complete Solanda units were unaffordable for the lower strata charging the 18% BEV as required by law. The BEV determines its lending rates by calculating the weighted average interest of all bank borrowings, including Housing Guaranty and World Bank funds loaned at a rate set to capitalize the BEV at a one-time rate of 12% and local commercial borrowings at up to 25%. This resulted in interest rates ranging between 18 and 21 percent."

P. 3 - Suggested language for the second paragraph is:

"The use of a weighted average for determining interest rates may have caused a distortion because of the one-time lending of HG resources at 12% to capitalize the BEV. This could result in support from Housing Guaranty and World Bank loans for subsidized rates to upper income groups, if the BEV continues its policy of investing most of its resources in homes for those above the median income. Therefore, we recommend that the Administrator of AID work with the BEV to retarget its shelter programs to families earning below the median income and to refine current BEV interest rate policy for social interest projects and those for families earning above the median income so that low income families do not subsidize higher income families."

Draft Report

Now on p 7.

P. 10 - Suggested language for the second paragraph is:

"Solanda is the first Ecuadorian Government effort to construct low income housing with cost recovery. Solanda units are affordable to AID's target group of families earning below the median income, but appear to be beyond the capacity of families earning below incomes at the 35th percentile; however, more of these units will reach lower income groups than those reached by the bulk of BEV/JNV projects which are primarily serving families at and above the median income level."

- 2 -

P. 16 - Suggested language for the second paragraph is:

"Inflation in Ecuador drove construction materials and labor costs up so high that the original 21.9 m2 basic core units envisioned in 1980 were unaffordable to AID's target group. During 1983, 48 percent inflation forced additional design changes for Sector II through IV."

P. 20 - Suggested language for the sentence in the second paragraph beginning "The Central Bank re-loans." is:

"The Central Bank re-loans the money in sucres to the BEV at a variable interest rate with a ceiling of 12 percent established to capitalize the BEV."

Now on p 15

P. 24 - Suggested language for the sentence in paragraph two starting "In contrast" is:

"In contrast HG and World Bank lower interest rate funds (plus BEV counterpart funds) to finance low income housing projects are available at 12 percent or less on a one-time basis to capitalize the BEV. Thus, when the BEV interest rates are determined by using a weighted average, the HG and the World Bank lower interest loans could result in a distortion of the interest rate policy required to recover costs, especially if BEV continues to finance units for families earning above the median income level."

Now on p 25

P. 42 - Suggested language for the sentence in the first paragraph starting with "However" is:

"However, because standards, costs and interest rates remained high or increased, the basic core units originally planned were beyond the capacity to pay of AID target group."

Now on p 26

P. 43 - Suggested language for paragraph 3 is:

"If the BEV continues its policy of investing most of its resources in homes for those above the median income, the use of a weighted average for determining interest rates may be inappropriate. Distortions could result in charging higher rates to low income customers and subsidizing rates to upper income groups."

Now on p 26

P. 43 - Suggested language for the Recommendation is:

"If the BEV continues its policy of investing most of its resources in homes for those above the median income, we recommend that the Administrator of AID work with the BEV to retarget its shelter programs to families earning below the median income and to refine current BEV interest rate policy for social interest projects and for projects for families earning above the median income so that low income families do not subsidize higher income families."

0453H

- 3 -

Requests for copies of GAO reports should be sent to:

U.S. General Accounting Office
Post Office Box 6015
Gaithersburg, Maryland 20877

Telephone 202-275-6241

The first five copies of each report are free. Additional copies are $2.00 each.

There is a 25% discount on orders for 100 or more copies mailed to a single address.

Orders must be prepaid by cash or by check or money order made out to the Superintendent of Documents.

United States
General Accounting Office
Washington, D.C. 20548

Official Business
Penalty for Private Use $300

First-Class Mail
Postage & Fees Paid
GAO
Permit No. G100