AGENCY FOR INTERNATIONAL DEVELOPMENT
WASHINGTON, D. C. 20523

BIBLIOGRAPHIC INPUT SHEET

FOR AID USE ONLY
BATCH #28

1. SUBJECT CLASSIFICATION

A. PRIMARY
Serials Y-AN20-0000-GG50

B. SECONDARY
Agriculture--Farm equipment--Tropics

2. TITLE AND SUBTITLE

Agricultural equipment development research for tropical rice cultivation; semi-annual progress report no.18,Jan.,1974 to June,1974

3. AUTHOR(S)

(101) IRRI

4. DOCUMENT DATE	5. NUMBER OF PAGES	6. ARC NUMBER
1974	56p.	ARC RP631.3.I61

7. REFERENCE ORGANIZATION NAME AND ADDRESS

IRRI

8. SUPPLEMENTARY NOTES *(Sponsoring Organization, Publishers, Availability)*

(Research summary)

9. ABSTRACT

10. CONTROL NUMBER	11. PRICE OF DOCUMENT
PN-RAB-588	
12. DESCRIPTORS	**13. PROJECT NUMBER**
Agricultural machinery Intermediate technology Rice	**14. CONTRACT NUMBER** CSD-2541 Res.
	15. TYPE OF DOCUMENT

SEMIANNUAL PROGRESS REPORT NO. 18
JANUARY 1 TO JUNE 30, 1974

ON

CONTRACT NO. AID/CSD-2541

AGRICULTURAL EQUIPMENT DEVELOPMENT RESEARCH
FOR TROPICAL RICE CULTIVATION

BY

BART DUFF
AGRICULTURAL ECONOMIST

FRED E. NICHOLS
EVALUATION ENGINEER

JOSEPH K. CAMPBELL
ASSOCIATE AGRICULTURAL ENGINEER

CHUL CHOO LEE
VISITING ASSOC. AGR. ENGINEER

AGRICULTURAL ENGINEERING DEPARTMENT
THE INTERNATIONAL RICE RESEARCH INSTITUTE
LOS BAÑOS, LAGUNA, PHILIPPINES

(FOR RESTRICTED CIRCULATION)

TABLE OF CONTENTS

Title	Page
Introduction and Summary	1
Progress Report	5
Machinery Development and Testing	
Lowlift irrigation pumps	6
The nature of single lug forces on rigid open-lugged wheels in wet rice soils	7
5-7 hp tiller	10
5-7 hp tiller attachments	11
8-14 hp tiller	11
Axial flow thresher	12
Stripper harvester	12
Power grain cleaner	13
Reciprocating grain cleaner	13
Moisture meter	14
Engleberg mill improvement	14
Centrifugal huller	15
Economics of Mechanization	
Technical and economic characteristics of the Philippine rice processing industry	17
A study of alternative solar drying methods	17
Alternative land preparation techniques	19
Small-scale metal industries study	22
Personnel List	23
Tables (1 to 18)	
Figures (1 to 24)	

INTRODUCTION AND SUMMARY

The contents of this report, the 18th in a semiannual series, present the results of research and development activities carried out under IRRI/USAID Contract No. csd-2541 for the period January 1 through June 30, 1974. The objectives of this contract are the design, development, and extension of small-scale agricultural equipment designs to manufacturers and, through commercial marketing channels, to small farmers in the developing countries. A complementary objective is the evolvement of a system of backward linkages between agriculture and the semi-modern sector of industry which maximizes the growth of employment opportunities, minimizes foreign exchange commitments and provides the basis for a broad-based and egalitarian development strategy.

In report number 17 of this series, we reported the results of a survey of five Philippine firms which had entered production of IRRI equipment during 1973. A similar study of nine firms covering the period from July 1973 to June 1974 has recently been completed. The results of this survey indicate that companies sold an estimated 4400 IRRI-designed machines during this period, mostly 5-7 hp power tillers. The survey also indicates that the axial flow thresher which was introduced in December of 1973 has entered production very rapidly.

IRRI machines manufactured and sold by nine firms, Philippines (July 1973 to June 1974).

Machines	Manufactured (Number)	Sold	
		Number	Percent
Power tillers	4014	2935	73
Batch dryers	79	74	94
Axial flow threshers	128	61	48
Grain cleaners	1	1	100
Bellows pumps	60	60	100
Multihopper seeders	120	100	83
Total	4402	3231	73

All but one of the firms had added new workers to their labor force during the period. The total increase in number of new jobs during the period was 560 with only small additional investments required tomake these employees productive. Capacity utilization also improved, although the results are not as striking as those observed for the five firms included in the earlier survey. These same firms are among the nine surveyed during the current period and it is evident that the initial increase achieved during the earlier period removed much of the slack which existed in productive facilities. The result is that the underutilization of productive capacity enumerated in the present survey was somewhat lower than the earlier study.

Changes in capacity utilization and investment for nine firms producing IRRI machines, Philippines (July 1973 to June 1974).

Item	Firm 1	2	3	4	5	6	7	8	9	Total
New investment (1000 pesos)	NR	98	500	3.3	15	9.15	80	10	20	765.15
Workers added	399	4	33	60	NR	18	12	5	29	560
Additional investment per worker (1000 pesos)	-	24.50	15.15	0.55	-	0.50	6.66	2.00	0.68	1.36
Capacity utilization(%)										
Current	80-85	NR	50	90-95	NR	70	100	NR	95	-
Previous	60-70	NR	20	85-90	NR	50	75	NR	90	-
Increase	20-15	-	30	5	-	20	25	-	5	-

A field model of a jet centrifugal pump was constructed and demonstrated during the current period. Refinements are underway to determine this device's operating potential under lowlift pumping conditions and to assess its cost effectiveness relative to conventional pumping installations. In another research oriented project, work to assess the performance characteristics of blade lug wheels in flooded soils was completed.

An improved power transmission system was tested and introduced on the 5-7 hp IRRI tiller. A complementary set of rotary tools for this machine has also been under evaluation to meet conditions encountered in upland and intercropping applications. Field testing of the 8-14 hp diesel powered tiller was resumed following the design and fabrication of a simple gearbox to meet the speed and power requirements imposed on this design when operating under both upland and lowland cropping conditions. Further improvements were also made in the steering clutch mechanisms for this machine to improve handling and durability.

The axial flow thresher has entered regular production through five manufacturers in the Philippines. Prototypes have been fabricated from drawings in Korea, Sri Lanka, Pakistan, Indonesia and Vietnam. A number of improvements have been made to enhance mobility, cleaning efficiency and durability. Fabrication work on the third prototype of the stripper harvester was completed during the reporting period and preliminary field testing has been undertaken to remove minor defects in the drive and stripping mechanisms. Full scale testing of this machine will be undertaken during the coming reporting period.

Work on a device to inject a slurry mixture containing fertilizer or insecticides or both chemicals was undertaken during the period of this report. Early tests with the prototype, which employs a simple peristaltic pump in conjunction with a series of simple injection tubes, indicate that precise placement improves the productivity of the chemical and sharply reduces the total costs for these inputs.

Revisions of the power rotary grain cleaner were undertaken to decrease cost and improve performance. In addition, the initial prototype of a simple oscillating grain cleaner was completed and is undergoing tests.

Preliminary drawings for a lightweight low-cost moisture meter were released to two manufacturers. Further laboratory and field trials with an improved Engleberg rice huller mill continue to support our belief that significant improvements in recovery efficiencies are possible through the introduction and use of simple refinements in the original design. Work on a disaggregated milling approach using a centrifugal device for hulling and the Engleberg mill for bran removal also appears to offer potential for low-cost improvement in milling efficiency.

The field phase of a comprehensive survey of rice milling facilities in the Philippines was completed in May. A complete analysis of the 187 rice mills and 594 farmers included in that survey is now underway.

Tests to determine the effect of alternative surface materials on the efficiency of solar drying were completed and the results are now being analyzed. Complete milling results will indicate whether there are opportunities for improving milling efficiency through use of changes in the techniques of solar drying now used in most of Asia.

The results of a series of experimental trials to determine the effect of alternative tillage techniques on yield are contained in the report.

Staff Appointments and Consultants

Dr. Chul Choo Lee of the Agricultural Engineering Department, Seoul National University in Suwon, Korea has joined the staff as visiting scientist to carry out research, test and evaluation activities on departmental design projects.

Mr. Ray Mijewardene who is currently attached as an FAO specialist in agricultural power and machinery in Malaysia, spent two weeks in the department during March 3-17, 1974 evaluating design projects and providing assistance to the engineering staff.

Awards and Honors

The axial flow thresher was awarded the Presidential Medal and won first prize in the utility invention category of the 1974 Philippine Inventors Contest.

Papers and Publications

Samuel, J., F. Nichols and S. E. Roy. 1974. "Design of a Centrifugal Jet-Pump Combination - A New Approach for Rice Irrigation and Drainage." Paper presented at the Annual Convention of the Philippine Society of Agricultural Engineers, Manila, April.

Gee-Clough, D. 1974. "Characteristics of Single Lugs, Typical of Cage Wheel Lugs, in Wet and Dry Soils." Paper presented at the Annual Convention of the Philippine Society of Agricultural Engineers, Manila, April.

Orcino, N. and B. Duff. 1974. "Experimental Results from Alternative Systems of Land Preparation." Saturday Seminar Paper, July 27.

Khan, A. U. 1974. "Appropriate Mechanical Technology for Developing Countries." Paper presented at the AAAS Symposium on "How can Technology in the United States and Developed Countries be Directed Towards Helping Developing Technologies in the Less Developed Countries?," San Francisco, March.

Subcontracts

Subcontracts in Vietnam, Pakistan, Indonesia and Malaysia were carefully reviewed to determine possible means of improving the performance of these agreements. A new subcontract in Sri Lanka has begun to produce usable results.

PROGRESS REPORT NO. 18
JANUARY 1 TO JUNE 30, 1974

The following personnel were responsible for these projects:

Machinery Development and Testing

1. Lowlift irrigation pumps	J. Samuel, F. Nichols
2. The nature of single lug forces on rigid open-lugged wheels in wet rice soils	D. Gee-Clough
3. 5-7 hp tiller	S. Gutierrez
4. 5-7 hp tiller attachments	C. Padolina
5. 8-14 hp tiller	S. Gutierrez
6. Axial flow thresher	C. Padolina, B. Ramos, F. Nichols
7. Stripper harvester	G. Espiritu
8. Power grain cleaner	C. Padolina, J. Campbell
9. Reciprocating grain cleaner	S. Gutierrez, B. Ramos, F. Nichols
10. Moisture meter	J. Arboleda
11. Engleberg mill improvement	J. Arboleda, J. Campbell
12. Centrifugal huller	J. Arboleda, J. Campbell

Economics of mechanization

13. Technical and economic characteristics of the Philippine rice processing industry	Z. Toquero, B. Duff
14. A study of alternative solar drying methods	B. Samson, B. Duff
15. Alternative land preparation techniques	N. Orcino, B. Duff
16. Small-scale metal industries study	B. Duff

MACHINERY DEVELOPMENT AND TESTING

Low Lift Irrigation Pumps

A project to study potential applications for water jet pumps in low lift irrigation pumping was initiated during the last reporting period.

The conventional use of a water jet pump is to extend the suction lift capability of small centrifugal pumps in household water systems. The present study, in contrast, is an investigation of possible applications to extend the discharge capability of centrifugal pumps for low lift pumping. A low lift irrigation pumping arrangement which makes use of a centrifugal jet pump combination is illustrated in figure 1. In this arrangement, the entire delivery of a low specific speed centrifugal pump is ducted through a jet pump device causing additional water to be lifted and delivered to the required height, thereby increasing the discharge capability of the centrifugal pump.

An empirical design procedure for such a centrifugal jet pump combination has been developed. The procedure is considered more easily applicable than existing methods of jet pump design and consistent with current data on low area ratio jet pump performance. The design procedure and the advantages of this combination over the high specific speed centrifugal or propeller pumps which it could replace have been described in a recent publication from the department.1/

Preliminary experiments using a small centrifugal pump (16 m, 5 lit/sec) and alternative jet pump configurations evolved on the basis of the above concept have yielded encouraging results indicating the feasibility of the concept and the validity of the design procedure. The performance data obtained in initial experiments are shown in table 1. They indicate clearly that it is possible to multiply the discharge of a centrifugal pump several fold at the expense of its pressure head. Figure 2 shows one of the experimental jet pumps in operation and figure 3 shows the same basic unit converted into a field demonstration model. The study is being continued with the following specific objectives:

1) To devise methods by which the head-capacity relationships of individual jet pumps can be predicted;
2) To determine the best proportions to be used on low area ratio jet pumps;
3) To design and develop a jet flow pump that can be released for commercial production.

Figure 4 shows the tentative design configuration for a jet flow paddy pump that may evolve from this work.

1/ Samuel, Jose, F. E. Nichols and S. E. Roy. Design of Centrifugal Jet Pump Combination. Paper presented at the Annual Convention of the P.S.A.E. Manila, April 1974.

The Nature of Single Lug Forces on Rigid Open-Lugged Wheels in Wet Rice Soils

The objective of the study was to determine the influence of various design parameters on the force output characteristics of an open-lugged wheel. The method chosen to accomplish this was to

(1) Analyze the trajectory of points on the surface of one lug passing through soil at constant travel reduction (slip) and sinkage;
(2) Reproduce this trajectory in an experimental apparatus and measure the resulting lug forces at low rates of strain, using a typical rice soil;
(3) Measure the effect of soil moisture content, lug angle, shape and width, sinkage, travel reduction and surcharge on the lug forces;
(4) Make a theoretical representation of the lug forces using the lug trajectory analysis and two well-known theories in soil-vehicle mechanics. Use measured physical soil constants to calculate theoretical lug forces and compare these to the actual measured lug forces.

Trajectory of points on a lug

Figure 5 shows the coordinate system used to analyze the trajectory of points on a lug. As the lug rotates, figure 6 shows how incremental displacements in the horizontal and vertical directions can be resolved into displacements perpendicular to (normal) and along (tangential to) the lug in its new position.

The incremental normal displacement is given by $dN=AD$ and the incremental tangential displacement by $dT=C_1D+AC_2$. Figure 7 shows the lug in three successive positions. As point C on the lug moves from C_1 to C_2 to C_3, the total change in tangential displacement is given by the arithmetic sum of lengths C_1A and C_2B and the total change in normal displacement by the arithmetic sum of lengths AC_2 and BC_3. Figure 8 shows values of N and T calculated for conditions similar to those used in the actual experiments.

Lug force measurements

An experimental apparatus was constructed to reproduce the trajectory described in the previous section, and to measure the resulting lug forces. A schematic of the apparatus is shown in figure 9. Rotation of the screw shaft handwheel caused the yoke to pull on the main shaft, resulting in both horizontal and rotational displacement of the main shaft. The rolling radius was thus the same as the pitch radius of the sprocket wheels. Figure 10 shows a schematic of the force transducers and figure 11 shows how lug forces were obtained from the reaction forces (R_1, R_2, R_3) measured in the transducer beams.

Numerous tests were done with the soil moisture content corresponding to equilibrium with the local atmosphere (approx. 15% on a wet weight basis). The soil was then flooded and all later tests done in the flooded condition. In this condition the top 3-in. layer of soil was worked until it became quite soft,

similar to a puddled soil. The soil used was a Maahas loam taken directly out of the field.

Summary of results

Results of the experiments are given in tables 2 to 8 and summarized below. Unless otherwise indicated all tests were carried out at 55.6 per cent travel reduction, 1.7 to 2.0 in. sinkage and all lugs were flat faced and 3 in. wide.

A. When the soil was flooded, lugs developed higher average lift and pull forces than when it was moist, the average pull being increased more than the average lift.

B. With the soil in the flooded condition:

1) As the lug angle was increased on steps from 15° to 35°, so that the lug surface became more nearly parallel to the soil surface at entry, both lift and pull per unit contact area of the lug were increased. Lift per unit area was increased more than pull per unit area. Since the contact area also increased as lug angle increased, both maximum and average lug forces developed were strongly increased as the lug angle was increased.

2) Lug shape had a strong effect on the forces developed, a 35° flat lug with a nose and a 2 in. radius curved lug developing both higher maximum and average lift and pull than did the 35° flat lug. For the flat lug with nose, pull was increased more than lift; but for the 2 in. radius lug, the opposite was the case.

3) The effect of lug width was simply linear, the forces developed by a 9 in. wide lug being three times those developed by a 3 in. wide lug.

4) Sinkage had a strong effect on lug forces. As sinkage was decreased from the "standard" value, the lift force developed decreased more than the pull force (both average and maximum values). Similarly, lift increased more than pull when sinkage was increased. Thus, although lift and pull were both strongly dependent on sinkage, the variation of lift with sinkage was greater than the variation of pull with sinkage.

5) Increasing travel reduction above the level of 55.6 per cent caused only a slight increase in pull forces, whereas almost no change at all was noticed in lift forces.

6) The application of less than 1 lb/in^2 surcharge to the soil failure zone caused by lug action increased lug forces significantly. The surcharge was applied by loading calibrated weights onto a plate placed directly on the failure zone.

Theoretical representation of lug forces

After examination of the lug force patterns measured, the theoretical soil failure pattern used to calculate lug forces was split into two parts:

1) A vertical failure pattern occurring immediately after engagement and similar to the failure pattern caused by a flat plate pushed vertically into the soil;

2) A horizontal failure pattern similar to the failure pattern caused by an inclined flat plate pushed laterally through the soil.

The value of θ at which the change from the vertical to the horizontal failure pattern occurs, is that at which the lug force curve constructed for a vertical failure pattern intersects the curve constructed for a horizontal failure pattern.

In the vertical failure pattern the soil stress normal to the lug face is given by:

$$\sigma_n (R, \theta) = \overline{K} (N (R, \theta))^n$$

where $\overline{K}$ is the sinkage modulus and n the exponent of sinkage.

The soil stress tangential to the lug face is given by:

$$\sigma_t (R, \theta) = c_a + \sigma_n (R, \theta) \tan \alpha$$

where c_a is the soil adhesion and α the soil-metal friction angle. A computer program was written to integrate σ_n and σ_t over the length of lug contacting the soil to find F_n and F_t, the lug normal and tangential forces.

Figure 12 shows the soil failure system and lug forces on the soil assumed for the horizontal failure pattern. The soil force on the lug is obtained by reversing the directions of P_γ, P_c, P_a, P_q and R_a shown in figure 12.

The force P per unit width of lug is given by:

$$P = P_\gamma + P_c + P_q + P_a$$

$$= \gamma z^2 N_\gamma + czN_c + c_a zN_a + qzN_q$$

where N_γ, N_c, N_a and N_q are the dimensionless Reece numbers. γ is the soil specific weight, c the soil cohesion and q the surcharge applied to the soil failure zone. R_a is given by the expression:

$$R_a = c_a z \operatorname{cosec} \alpha$$

Resolving these forces to find lug normal and tangential forces:

$$F_n(\theta) = b\,(P\cos\alpha)$$

$$F_t(\theta) = b\,(c_a z \operatorname{cosec}\alpha + P\sin\alpha)$$

$$= bc_a z \operatorname{cosec}\alpha + F_n(\theta)\tan\alpha$$

where b is the lug width. Figures 13 and 14 show lug forces calculated in this manner compared to those actually measured.

Figure 13 shows that good agreement was obtained between calculated and measured lug normal forces for $\beta = 0°$ in the flooded soil condition. Similar agreement was found in the moist soil condition. Agreement between calculated and measured lug tangential forces was only fair at both soil moisture contents.

Figure 14 shows good agreement between calculated and measured lug normal forces for $\beta = 35°$ in the flooded condition and good agreement was also found in the moist condition. Poor agreement was found between measured and calculated lug tangential forces in figures 13 and 14, it can be seen from figure 8 that the tangential displacements were always positive for $\beta = 0°$ and that a regular and positive tangential force was developed. Tangential displacements were always negative for $\beta = 35°$ and no regular force pattern at all developed.

In figures 13 and 14, the curves AB_1C are those obtained using measured physical soil constants and curves AB_2C obtained by arbitrarily changing $\overline{K}$ to give the best agreement with measured values in the early part of the contact period.

Although the theoretical representation can be improved by further work, it is sufficiently accurate for performance estimates of open lugged wheels and traction aids such as strakes. This represents a considerable advance on the present state of the art and, with further development, can result in a standardized design procedure for these devices, greatly reducing the current necessity for inefficient and costly empirical design and testing.

A procedure for using the information for the purpose of designing open lugged wheels has been developed.

5-7 hp Tiller

The design changes described on page 4 of report No. 17 were evaluated using a tiller equipped with a 7-hp engine. The machine was tested for 105 hours under both lowland and upland conditions. A post operative examination revealed decreased wear and better performance of both the V-belt drive and the second reduction drive of the gearbox.

A letter with revised drawings describing the above two drives as well as a strengthened countershaft was sent to all manufacturers producing the IRRI tiller so they may incorporate the above improvements.

The external steering clutches designed as optional equipment to fit between the axle shaft and wheels did not function satisfactorily. Problems were created by mud packing between the clutch housing and clutch actuating linkage and by excessive wear of the clutch dogs. These clutches are currently being redesigned.

A brief survey of tiller owner-operators in the provinces of Nueva Ecija, Nueva Vizcaya, and Isabela was conducted. The primary complaint of owner-operators of the IRRI tiller was the high frequency of replacing the V-belt drive. The earlier clutch mechanism which employed a belt tensioning pulley has now been replaced with a sliding engine base. Many tiller owner-operators expressed the desire to have their tillers equipped with steering clutches for easier turning. A more extensive survey of IRRI tiller owner-operators should be made to determine problems encountered and improvements desired.

5-7 hp Tiller Attachments

The position of the cutting edges of the upland rotary blades in relationship to the soil surface was changed. In the new arrangement, the cutting edge of the blade lags behind a radial line by 12° (fig. 15). Tests with the new design revealed improved performance. Further tests of the experimental design under various soil conditions and cropping situations will be conducted.

8-14 hp Tiller

Further field tests were conducted using hardened steering dog clutches and revised drive arrangements. The tiller was tested on upland and lowland fields. The twin B-section V-belt drive is marginal with the 7.5 hp diesel engine currently on the tiller. The steering clutches worked satisfactorily except for some minor adjustments and repairs resulting from improperly machined parts.

A transmission gearbox was designed and fabricated to replace the jeep gearbox which did not provide the optimal travel and working speed relationships and does not have an independent output shaft to drive the rototiller. The IRRI designed gearbox uses only simple spur gears and provides four forward and two reverse speeds as indicated in the following table:

	Wheel Axle RPM at 1800 Engine Speed	Travel Speed km/hr
1st Gear	11.8	1.65
2nd Gear	18.85	2.70
3rd Gear	29.5	4.20
4th Gear	47.1	6.78
Reverse Gear (low)	14.75	2.10
Reverse Gear (high)	39.2	5.60

PTO shaft speed	315 rpm
Wheel diameter	760 mm

The gearbox has been installed on the first prototype unit and revisions have been made on the handle bar assembly to improve the appearance and control of the tiller (fig. 16). The tiller will undergo further field testing to evaluate the above modifications during the next reporting period.

Axial Flow Thresher

The third and last prototype of the axial flow thresher is now being mass produced locally and outside the Philippines.

In the Philippines, five companies are currently producing the thresher. Two have had their initial production models tested and evaluated in the department as reported in report No. 17; the remaining three companies had their initial producton models tested recently. Two additional manufacturers have begun construction of their first commercial prototypes.

Outside the Philippines, a commercial prototype has been completed in Pakistan. Single prototypes are being produced in Sri Lanka and Indonesia for the IRRI testing program. Those prototypes will be tested and evaluated in accordance with standard procedures being followed at IRRI. Korea and Vietnam have also produced prototype machines for technical and economic evaluation of their potential in local markets.

Some manufacturers have made modifications in response to their markets. For example, several are equipping their threshers with leaf springs, shock absorbers and standard pneumatic tires so the threshers may be towed behind vehicles at highway speed. Another has substituted formed angle sections for structural angles to take advantage of the particular tools in his factory and thus lower cost.

Experimental modifications are currently under test at IRRI. These include replaceable screens for the rotary sieve, clean grain outlet adjacent to the feed table, and auxiliary cleaning screen above the air control grain panel to improve cleaning performance.

Several axial flow threshers were purchased from different manufacturers and these have been sent to various locations in the Philippines as well as to the IRRI subcontractors abroad. This procedure is to ensure further and broader evaluation and exposure of the machine to farmers. Feed-back from them will guide design improvements in the machine.

Stripper Harvester

The third prototype of the stripper harvester was completed in early April. The machine is self-propelled and features a six-row stripping h[illegible] During May tests of the control mechanisms and minor modifications and repairs on the

drive system were carried out.

The stripper was extensively tested on a firm sandy road and on relatively soft but dry soil. The forward, reverse, and "skid-steer" performance on soft, dry soil was poor. A threshing speed of about 2-1/2 miles per hour has been used throughout the tests. The transport speed of 15 miles per hour has not been used to date.

There have been no extensive threshing tests to date because there is no field available at present. Field trials will be conducted early in the next reporting period.

Power Grain Cleaner

The Joint Commission on Rural Reconstructon (JCRR) has a subcontract with IRRI to test and evaluate IRRI machines in Taiwan. Working with the Taiwan Agricultural Research Institute (TARI), JCRR found that under Taiwan conditions, capacity was increased, power requirements and the number of machine component parts decreased with safer operation when the screw conveyors were replaced with a gravity flow feed trough.

A power grain cleaner at IRRI was revised according to JCRR recommendations and is currently under test (fig. 17).

It is anticipated that further test and evaluation of the modified cleaner will confirm that the modifications are significant improvements. If so, the modifications will be adopted and revised drawings sent to manufacturers and subcontractors who were previously furnished with blueprints for the rotary cleaner.

Reciprocating Grain Cleaner

The increasing cost of steel has increased the cost of the IRRI rotary power grain cleaner. It is not being fully accepted by farmers and manufacturers (local or foreign) primarily due to cost.

To develop a low-cost yet efficient cleaning mechanism, the oscillating grain cleaner project was reinstated. The machine (fig. 18) consists of two reciprocating screens, a single collecting pan, a centrifugal blower, an auger and short bagging elevator.

Material to be cleaned is fed from a hopper by a fluted cylinder actuated by a ratchet drive. The screens oscillate at 300 cycles per minute. The first screen removes chaff and straw while the second removes small impurities. The full grain and fine impurities slide from the collecting pan into the air stream, where fines are separated from the grain. The grain is augered to a bucket elevator and to the bag.

After extensive tests have been performed, modifications will be undertaken to reduce weight and cost and at the same time maintain or improve performance.

Moisture Meter

The design, construction and calibration method for the prototype moisture meter was described in report No. 17. Calibration was carried out in a small air-conditioned room. The desired room temperature was maintained by operating the air conditioner or a resistance heater. The grain samples were allowed to reach equilibrium with room temperature. Before moisture tests were initiated, a series of grain temperature readings were taken.

The moisture meter has been calibrated for three room temperatures and moisture contents from 12% to 30% w.b. The data from the calibration trials were prepared and analyzed by the IRRI Statistics Department and a calibration chart is currently being constructed. Calibration will also be made for grains other than rice.

Final drawings of the moisture meter are being produced so that manufacturers may estimate the costs and build pre-production units. The construction of the housing is being redesigned to improve the appearance, comfort and ease in operation, safety and portability of the unit. The front panel was slanted by 30° from the center for easy operation. As soon as the final drawings are ready, a single unit will be fabricated in the shop for checking. If this unit proves satisfactory, drawings will be sent to manufacturers for commercial production of the unit. Two companies have already indicated their intent to construct the unit as soon as the drawings are ready.

Engleberg Mill Improvement

The details of the work done to improve the Engleberg mill were presented in reports No. 16 and 17. Improved performance was observed with changes in the discharge valve, perforated screen cylinder and top cover lining insert. Attempts to increase the peripheral speed of the cylinder (180 to 220 m/min) were discontinued since tests showed a significant decrease in milling capacity. This is probably due to the slippage of the grain at the feeding end of the spiral cylinder.

A comparative test was made between a commercial friction polisher (Sanriku) used as one-pass mill and the Engleberg mill with various degrees of modifications: 1) original Engleberg mill; 2) Engleberg mill with modified discharge, perforated screen and a newly constructed top cover insert lining with three straight parallel lugs; 3) Engleberg mill with all modifications incorporated (report No. 16). Three 6 kg IR 20 paddy samples at 12.6 percent moisture and 94 percent purity were fed into each rice mill. All pertinent data was recorded and a laboratory milling analysis of the paddy was carried out.

The results shown in table 9 indicate the following: 1) total and head rice recoveries were not affected by the milled rice temperature. Although the temperature of the milled rice in the improved Engleberg was higher by 8°C, both head rice and total rice recoveries were higher than the commercial polisher; 2) the top cover lining insert with straight lugs did not improve the milling performance of the Engleberg machine. In addition, it was observed that capacity was decreased; 3) improvements made on the Engleberg (report No. 16) produced consistently better results when compared with the original machine.

A local manufacturer and a rice mill operator indicated that the clearance between the rotating cylinder and perforated screen has a significant effect on the performance of the mill. It was also observed that blade clearance at the feeding end affects capacity. With improvements made on the discharge gate valve, the configuration of the cylinder discharge end seems ineffective. These and other modifications will be further investigated. Attempts will also be made to integrate the improved Engleberg mill and the centrifugal huller.

Centrifugal Huller

The construction of the prototype and results of preliminary tests made on the centrifugal huller were described in report No. 17. Further performance tests were made during the period under review. The centrifugal huller was operated at 1957, 2135, 2313 and 2490 rpm. For each speed setting 3 to 5 kg of IR 1561 paddy was fed into the huller at a constant rate of 22 kg/hr. Data were taken to determine (a) the grain lost with the husk, (b) hulling efficiency, and (c) percent broken grains. The results are shown in figure 19 . Hulling efficiency increased with rpm, but so did brokens and grain loss. The tests revealed that 2100 to 2350 rpm is the optimum rpm for the machine.

A further test was made by coupling the centrifugal huller with the improved Engleberg mill (see report No. 16 and previous section). For comparison, data from three samples was taken on the improved Engleberg mill with all modifications attached. Using the same rpm employed in the previous tests (1957, 2135, 2313 and 2490 rpm), 3 to 5 kg samples were fed into the centrifugal huller and the paddy-brown rice mixture fed directly into the improved Engleberg mill. Data were taken to determine the effect of the centrifugal huller on overall performance of the improved Engleberg mill. The results of the tests showed 69 to 72 percent total rice and 43 to 46 percent head rice recovered with the centrifugal huller-Engleberg mill combination (figure 20). The total and head rice recoveries with the improved Engleberg mill alone were much lower. The milled rice in all tests, however, was brownish, indicating a smaller amount of bran removed during milling.

Laboratory milling of the same sample to about the same color as those milled in the centrifugal huller-Engleberg mill combination indicated that about 6 percent of the bran was removed. The laboratory result at this milling condition was 72.5 percent total rice and 56.6 percent head rice recoveries.

To determine the life of the impact rubber tire lining used on the centrifugal huller, the degree of wear on the impeller blades and other parts in contact with the paddy, and to obtain the response of people using the machine, the centri-

fugal huller was coupled to an existing commercial kiskisan mill situated in Bay, Laguna. Before operating the unit, the following additions were made: 1) a cyclone to collect rice hull from the separator; 2) an elevator to transport the paddy-brown rice mixture to the Engleberg; and 3) blades at the back of the impeller to increase the volume of air required by the increased hulling capacity. Paddy brought in by the customers for milling was weighed before and after milling and moisture contents taken.

The tests showed that: 1) a new rubber tire impact lining wore out after hulling about 1929 kg of paddy; 2) the impeller blade failed after processing 1342 kg of paddy; 3) the centrifugal huller-Engleberg combination had a milling recovery of 68.0 percent, an increase of 1.13 percent compared with the kiskisan alone; 4) visual observation indicated a comparatively high head rice recovery, a feature that was desired by the customer.

The responses elicited from those using the centrifugal huller were the following:

1) some customers transferred to other kiskisan mills after the installation while others made a critical observation and inquiries on the centrifugal huller-Engleberg set-up;

2) there were complaints of a reduction in rice bran with the husk separator working (this was checked by closing the air vents at the back and front of the centrifugal huller and the husk collected at the cyclone was fed back into the Engleberg);

3) some persons were critical of the milling quality and head rice recovery but expressed satisfaction with the performance of the unit;

4) after initial response had subsided, people seemed to accept the combination as shown by the increase in the customers coming to use the service.

Closer observation of the rubber tire impact lining showed that about one-sixth of the circumference was worn out. Installing the liner so that it can be rotated periodically could increase its capacity to about 8-10 tons before replacement. This volume is about twice the capacity of a set of 6-in. rubber rolls used by the Model SB-2B Satake machine.

Further tests will be made on the machine to verify the results obtained. Additional attempts will be made to redesign the machine to 1) reduce the wear on the impeller blade; 2) increase the capacity and easy replacement of the impact liner made from available local materials; and 3) make the machine easily coupled to existing Engleberg mills.

ECONOMICS OF MECHANIZATION

Technical and Economic Characteristics of the Philippine Rice Processing Industry

Work on the initial two phases of the study (farm and mill level survey) was completed the first week of May. A total of 187 rice mills (96 steel hullers or "kiskisan" and 91 disc shellers or cono) and 594 rice farmers were included in the study (Table 10).

A total of 64 rice mills and 211 rice farmers were surveyed in Central Luzon; 62 rice mills and 190 rice farmers in Southern Tagalog and; 61 rice mills and 193 rice farmers in Camarines Sur (Table 11).

The mobility and timing of the survey were seriously impaired by a shortage of fuel for vehicles and the inadequacy of transportation facilities in Mindoro Oriental and Mindoro Occidental. It was also noted in several instances that the rice shortage which occurred in mid-1973 resulted in the closing of a number of mills on the survey list. This, plus the inaccurate information provided in the listing of mills used in drawing the sample required replacement selection during the course of the survey.

Work on data tabulation and processing is currently underway. A survey of data processing firms was undertaken to assess the capacity and availability of these firms to meet the computer requirements of the project.

Plan for the next six months

Data processing, tabulation, and analysis are programmed for completion by July. The third phase of the study, which will be a detailed engineering appraisal of a sub-sample of rice mills will commence as soon as summary results from the initial two phases of the study have been prepared. Technical assistance from the engineers of the Department and possibly from UPLB will be solicited during this phase of the study.

A Study of Alternative Solar Drying Methods

Experimental trials involving alternative solar drying methods were conducted during the 1974 dry season at the IRRI farm. The objectives of the study were: (1) to evaluate the efficiency of low-cost solar drying methods which are suited for use by small farmers, (2) to determine which solar drying method produces the highest milling qualities (maximum head and milled rice yields), (3) to determine the relative rate of moisture reduction achieved with each method and, (4) to determine the normative cost of each method.

The study made use of five solar drying surfaces: concrete or cement, clear polyethylene sheet, woven mat, synthetic jute sack, asphalt and mechanical dryer employed as the control. These materials were used as matting over an earthen floor.

Two high-yielding varieties, IR1561 and IR20, were used as samples in this study to compare milling qualities. They are a fairly long and short grain type, respectively. The varieties were freshly-harvested to ensure uniformity in moisture content within each variety. Grain samples (replicated three times) were spread directly on the respective drying surfaces covering an area of one square meter with a grain depth of 3 centimeters. The samples from each treatment were reduced to 14 percent moisture or below by the use of solar energy (drying surfaces 1 to 5) and hot air in the case of mechanical dryer (control). This allowed examination of the effect of different drying methods on total and head rice recovery and the rate of drying.

Results and Discussion

Moisture content reduction between varieties

The initial moisture contents of IR20 and IR1561 before solar drying were 23.9 and 23.4%, respectively. Unfortunately, the mechanical drying treatment was delayed until several days following the solar treatments. At the time the mechanical samples were dried, the moisture contents were 22.6 and 21.4% for IR20 and IR1561, respectively.

The moisture reduction relationships for IR20 and IR1561 are shown in table 12 and figures 21 and 22. In general, the moisture content of both varieties decreased gradually at hourly intervals until a 14 percent or below was reached at the 4th or 5th hour of drying in solar-dried samples. Table 12 clearly shows that IR20 had a faster rate of moisture reduction than IR1561. This difference may be attributed to the relative size of exposed grain surface areas, IR20 being a shorter, thicker grain than IR1561.

Moisture content reduction among solar drying treatments

Comparing the rate of moisture reduction among solar drying surfaces, the asphalt followed by cement/concrete surfaces had the fastest drying rates. This conforms with our expectation that black objects absorb more heat than white objects. These treatments were followed by the woven mat, synthetic jute sack and clear polyethylene sheet in that order. Asphalt and cement both absorb and retain heat energy which may in part explain the faster rate of moisture reduction if the initial latent heat levels were high. Both the woven mat and synthetic jute sack had perforations which permits the aeration, thus producing a faster rate of moisture reduction than the polyethylene sheet. The polyethylene sheet was not perforated and tended to accumulate condensation on the lower surface during the experimental trial. This resulted in longer drying times to reduce the moisture content of 14% or below.

Milling quality between varieties

The head and total milled rice yields of IR20 and IR1561 are shown in table 13 and figures 23 and 24, respectively. Comparing the two varieties, IR1561, which is characteristically a translucent type, produced higher total milled rice than IR20. Between the two varieties, IR20 produced higher head rice yields than IR1561. Again, this may be attributed to the grain length of the two varieties, IR20 being shorter than IR1561. It has been found that a longer grain is more susceptible to grain damage during milling relative to a shorter grain.

Milling quality between solar and mechanical drying methods

Table 13 illustrates that all solar drying surfaces used produced more or less equal values of total milled rice, but values lower than those in mechanically-dried samples. Head yield, in general, is also higher in mechanically-dried as compared to solar-dried samples. This demonstrates the advantage of controlled (mechanical) over uncontrolled (solar) drying. Mechanical drying of paddy reduces sun-checking in the grain and subsequent breakage during milling.

The results of these trials can only be considered tentative because of the specific set of conditions under which they were carried out. For similar temperature and humidity conditions and using similar varieties and methods one can expect similar results. The economic evaluation of these trials will be presented in report number 19. Added to these findings will be the work carried out under IRRI sponsorship at the University of Canthó in South Vietnam where a comparative set of experiments were conducted.

Alternative Land Preparation Techniques

In report No. 17, the preliminary results from an experimental trial to determine the yield effects of alternative lowland tillage practices were reported. In the present report, we briefly review the content and specifications of the experiment and report the complete results from all four sites included in the project.

Technological alternatives

A survey was conducted in the area prior to the experiment to determine the most common traditional equipment combinations used for land preparation. This information was used to select five alternative equipment combinations for land preparation and three levels of weed control employed in the study. These are shown in Table 14 and detailed below:

T1 - rotavate once using large tractor and harrow three times with carabao
T2 - rotavate once using large power tiller and harrow three times with carabao

T3 - plow once and harrow three times using small power tiller
T4 - plow once using carabao and harrow three times with small power tiller
T5 - plow once and harrow three times using carabao

The three levels of weed control are:

W1 - manual weeding at 30 days after transplanting
W2 - chemical weed control (pre-emergence herbicide applied four days after transplanting)
W3 - control (no weeding)

Soil conditions

In order to introduce a range of soil conditions into the experiment, four locations were included in the trials. Three locations, Marilo, Pulo I and Pulo II have access to irrigation while Kapalangan is in a rainfed area. One classification of soil condition was based on interviews with farmers at each site. Farmers were asked to characterize soil conditions by indicating the depth of the paddy as shallow, moderately deep or deep. Cone penetrometer readings were taken at each site before and after tillage treatments (see table 15) to determine the actual depth to the hardpan at bearing pressures of 35 psi and 70 psi. In reading table 15, there are some inconsistencies between farmer's subjective judgements regarding soil conditions and those reflected in the cone penetrometer readings. Table 16 contains the analytical results of soil samples taken at each site.

Materials and methods

A modified split-plot design with two replications was employed. Land preparation treatments were assigned to the main plots and weeding techniques on subplots.

A rotary tiller was used for primary tillage with both the large tractor (65 hp) and the large power tiller (10-15 hp). Moldboard plows were used with the carabao and small power tiller (5-7 hp). Harrowing on all plots was performed using a comb harrow. The intensity and timing of harrowing following basic tillage was standardized for all methods. An interval of one week elapsed between primary tillage and the first harrowing and between the first and second harrowings. This permitted germination of some weeds following primary tillage which were subsequently destroyed during the harrowing operations. Final harrowing was performed one day before transplanting. Each harrowing consisted of two passes over the paddy.

Raising seedlings, transplanting, and subsequent crop care were under the supervision of the farmer. He was encouraged, however, to standardize each operation over all plots.

Transplanting using IR20, an early maturing variety of about 120 days duration, took place the first week of July. A single top dressing of 60 kg/ha N was applied after three weeks to all treatments.

Weed counts were taken at 30 DT to compare weed growth among land preparation treatments. At the grass heading stage, weed weight samples from two 20 x 50 cm quadrants were taken to provide a comparison of weed survival among weeding treatments within each land preparation treatment. Grain yield data is based on 6 sq m cuttings reduced to 14 percent moisture content.

Results

Land preparation: The field performance rates for alternative techniques are shown in table 15. These figures are based upon the net time spent for each task with losses resulting lunch breaks, rests, and breakdowns being deduced from the total. To calculate the total man-hour requirements necessary for each tillage treatment would require that these losses be added to the figures shown in the table.1/

The total manpower requirements shown in table 13 also demonstrate a capacity advantage for technology level T3 (small power tiller) over other combinations. Where timeliness is an important consideration, this method embodies somewhat more flexibility and efficiency than other techniques. A large tractor-small power tiller combination might reduce the time requirement by 35 percent as compared with method T3 but it is unlikely that this equipment combination would be used.

The initial soil depth shown in table 13 was taken just prior to primary tillage and the terminal depth immediately after final harrowing. The depth at 35 psi pressure following land preparation increased by about 7 cm in Marilo, 5 cm in Pulo I, 9 cm in Pulo II and 7 cm in Kapalangan for all treatments. At 70 psi pressure, however, the increase is less -- only about 3 cm for all sites except Pulo II where the depth increased by 6 to 7 cm Of greater significance, however, is the substantial reduction in soil depth at 70 psi in the large-tractor tilled plots. This indicates slight degradation in the hard pan when using large tractors for the primary tillage operation. In continuously irrigated areas, this finding has serious implications for continuous use of four wheel tractors equipped with rotavators.2/

1/ Engineers often use a measure known as "field efficiency" which reflects losses incurred in turning, routine maintenance, etc. Such an index of efficiency could be developed from the experimental results.

2/ An experiment to measure the long term effects on the depth of the compacted layer is being conducted by the IRRI agricultural engineering department.

The Analysis of Variance for weed weight and grain yield shown in tables 17 and 18 indicate no significant differences in yields and weed weights among land preparation treatments. Significant differences in yield and weed weight, however, occur between the control and treated plots within land preparation treatments. These are shown more clearly in tables 17 and 18 . The low efficiency of the herbicide application at all locations stems principally from the adverse weather conditions prevailing at the time of application.

The yield figures shown in table 18 tend to support the hypothesis that mechanization of land preparation per se does not increase lowland rice yields. The yield means not only exhibit non-significant differences but also exhibit a variation among means which is very minimal -- at most .2 of a ton. Table 18 also shows that the differences in mean yields of different weed control measures, while statistically significant, are quantitatively very small. A plausible explanation for this observation is the type of weed regime encountered in the area. Throughout the experimental plots, the weed population was predominantly sedge of the species Cyperus iria (L) Vahl. Research has shown that under most lowland conditions, yields are only slightly affected by competition from sedge and broadleaf weeds. Significantly lower mean yields usually result from competition with mixtures containing grasses, sedges, and broadleafs or with grasses alone.3/

Small-Scale Metal Industries Study

Data for a number of firms contained in the country wide survey of metal working firms is now being assembled and processed for analysis at the East-West Center of the University of Hawaii. Because of the large volume of information collected in this survey, special emphasis is being placed on the most efficient means of classifying the information so that it will meet the objectives of the study. Preliminary results from this analysis are not expected to become available until sometime in January or February of 1975.

3/ IRRI Annual Report 1968.

PERSONNEL LIST

Personnel and their respective man-months engaged on the project during the past six months, January 1 to June 30, 1974 and projected requirements, July 1 to December 31, 1974:

Position	Name	Fr: 1-01-74 To: 6-30-74	Fr: 7-01-74 To: 12-31-74
Development Engineer & Project Leader	A. U. Khan[1/]	0	4.5
Associate Agricultural Economist	B. Duff	6	6
Evaluation Engineer	F. Nichols	4	0
Visiting Assoc. Agricultural Engineer	J. K. Campbell	6	0
Visiting Assoc. Agricultural Engineer	C. C. Lee	2	6
Assistant Design Engineer (Design)		0	6
Assistant Design Engineer (Processing)		0	6
Senior Research Assistants (Design)	J. Arboleda	6	6
	N. Navasero	6	6
Senior Research Assistant (Evaluation)	C. Padolina	6	6
Research Assistants (Design)	G. Espiritu	6	6
	G. Salazar	0.5	6
Research Assistant (Evaluation)	S. Gutierrez	6	6
Research Assistants (Economics)	Z. Toquero	6	6
	N. Orcino	6	6
Research Aide (Evaluation)	B. Ramos	6	6
Research Aide (Economics)	B. Samson	6	6
Draftsmen	F. Cabrales	6	6
	B. Buan	6	6
Secretaries	C. Jizmundo	6	6
	E. Manalo	6	6
Shop Foreman	E. Dungo	6	6
Machinists	Z. Borja	6	6
	A. Dizon	6	6
Tinsmiths	R. Santos	6	6
	C. Flojo	3.5	6
Welder	A. Barot	6	6
Shop Mechanics	M. Macatangay	6	6
	R. Dignadice	6	6
	P. de Mesa	6	6
	A. Camacho	6	6
Laborers (Shop helpers)	M. Castro	6	6
	E. Macatangay	6	6
(Student assistant)		0	6

1/ Three-fourths time charged to the Contract. On one-year study leave.

Table 1. Summary of results of experiments with three jet pumps.

Jet pump (1)	Area ratio (2)	Primary pump speed R.P.M. (3)	Input head (Hp) (m) (4)	Input head (Qp) (Lit/Min) (5)	Suction lift (-Hs) (m) (6)	Total lift (Hd-Hs) (m) (7)	Output flow (Qs+Qp) Lit/Min (8)	Flow ratio M* $\frac{(Qs+Qp)}{Qp}$ (9)	Pressure ratio N* $\frac{Hd-Hs}{Hp-Hs}$ (10)	Efficiency n* (M*xN*) (11)
A	0.125	3500	12.63	265.9	0.90	1.80	703.3	2.64	0.143	37.8
		3900	15.83	300.6	0.90	1.80	946.3	3.15	0.114	35.9
		3900	15.97	297.5	Nil	1.18	1139.3	3.83	0.074	28.3
		3900	15.97	298.5	Nil	0.58	1196.3	4.01	0.036	14.4
B	0.063	3900	15.97	297.5	Nil	1.18	1099.4	3.71	0.074	27.5
		3900	15.97	298.5	Nil	0.58	1373.7	4.60	0.036	16.6
C	0.035	3900	16.04	295.4	Nil	1.10	49.3	0.17	0.069	1.2
		3900	16.21	296.5	Nil	0.51	1036.5	3.49	0.032	11.2

Table 2. Effect of soil moisture content on lug force characteristics.

	Avg. Lift Force (lb)	Avg. Pull Force (lb)	Max. Lift Force (lb)	Max. Pull Force (lb)
$\beta = 0°$				
m.c. = 15.2%	1.24	1.88	3.50	4.75
m.c. = 39.9%	1.44	4.70	4.15	7.80
$\beta = 35°$				
m.c. = 15.2%	6.68	6.20	22.00	15.10
m.c. = 39.9%	6.70	7.62	15.50	12.10

Table 3. Effect of lug angle on lug force characteristics.

Lug Angle (deg.)	Max. Lift (lb)	Max. Pull (lb)	Avg. Lift (lb)	Avg. Pull (lb)	Max. Lift per unit contact area (lb/in.^{2})	Max. Pull per unit contact area (lb/in.^{2})
15	4.39	7.47	1.52	4.34	1.31	1.42
25	6.73	8.46	2.50	5.37	1.39	1.50
35	14.25	10.73	5.26	7.03	2.29	1.83

Table 4. Effect of lug shape on lug force characteristics.

	Max. Lift (lb)	Max. Pull (lb)	Avg. Lift (lb)	Avg. Pull (lb)
Lug 1*	16.90	17.00	6.79	10.46
Lug 2**	23.00	25.80	10.37	15.83
Lug 3***	27.70	21.80	10.37	13.35

* 35° flat lug
** 35° flat lug with nose
*** 2 in. rad. curved lug

Table 5. Effect of lug width on lug force characteristics.

Lug Width (in.)	Max. Lift per unit-lug width (lb/in.)	Max. Pull per unit-lug width (lb/in.)	Avg. Lift per unit-lug width (lb/in.)	Avg. Pull per unit-lug width (lb/in.)
3	5.75	4.4	2.74	2.29
6	5.85	4.25	2.80	2.66
9	5.45	4.15	2.81	2.36

Table 6. Effect of sinkage on lug force characteristics.

Sinkage (in.)	Entry Angle (deg.)	Max. Lift (lb)	Max. Pull (lb)	Avg. Lift (lb)	Avg. Pull (lb)
1.02	24.5	5.60	7.40	2.70	4.90
1.96	10.00	19.10	16.10	8.20	8.90
2.87	0.00	24.60	17.00	10.60	11.50

Table 7. Effect of increase of travel reduction on lug force characteristics.

Travel Reduction (percent)	Max. Lift (lb)	Max. Pull (lb)	Avg. Lift (lb)	Avg. Pull (lb)
55.6	18.70	14.40	7.90	9.30
64.6	18.40	15.00	8.90	9.70
70.4	18.30	16.80	8.10	11.00

Table 8. Effect of surcharge on lug force characteristics.

Surcharge ($lb/in.^2$)	Increase over "no surcharge" values (percent)			
	Max. Lift	Max. Pull	Avg. Lift	Avg. Pull
0.36	31	58	35	32
0.65	38	85	41	28

Table 9. Comparative milling performance of one-pass rice mill with alternative component combinations.

Test machine	Recovery milled rice(%)		
	Total	Head	Temperature(°C)
Engleberg (1) (Original)	65.20	28.06	42.6
Engleberg (2) (a, ć, d)1/	65.37	25.29	45.0
Engleberg (3) (a, b, d, c)	66.39	34.19	48.0
Commercial polisher	64.25	28.79	40.2
Lab milling (6% bran removal)	70.0	50.97	

1/ a - Rice outlet changed from slide to weight-loaded gate.

b - Cylinder with two ribs and continuous spiral screw.

c - Lining insert -- a thin -- (report No. 16).

ć - Lining insert -- not slanted and no restrictions.

d - Two strips of full-length ribs mounted on perforated cylinder.

Table 10. Total number of mills and farmers by type and milling capacity per 12-hour operation.

Milling Capacity (tons/12-hour)	Number of mills	Farmer		
		User	Non-user	Total
	C O N O	M I L L S		
4.84 and below	30	52	43	95
4.85 - 8.79	30	43	51	94
8.80 and above	31	28	72	100
TOTAL	91	123	166	289
	H a L L E R	M I L L S		
2.64 and below	32	80	19	99
2.65 - 3.94	34	68	45	113
3.95 and above	30	53	40	93
TOTAL	96	201	104	305
GRAND TOTAL	187	324	270	594

Table 11. Number of rice mills and rice farmers by region, type of mill, and milling capacity per 12-hour operation.

Milling Capacity (tons per 12-hour)		Number of Rice Mills		
		Central Luzon	Southern Tagalog	Camarines Sur
			CONO MILLS	
4.84 and below		10	10	10
4.85 - 8.79		10	10	10
8.80 and above		11	10	10
	TOTAL	31	30	30
			HULLER MILLS	
2.64 and below		10	12	10
2.65 - 3.94		13	10	11
3.95 and above		10	10	10
	TOTAL	33	32	31
GRAND TOTAL		64	62	61

Milling Capacity (tons per 12-hour)		Number of Rice Farmers		
		Central Luzon	Southern Tagalog	Camarines Sur
			CONO MILLS	
4.84 and below		31	32	32
4.85 - 8.79		31	31	32
8.80 and above		38	30	32
	TOTAL	100	93	96
			HULLER MILLS	
2.64 and below		34	37	28
2.65 - 3.94		46	30	37
3.95 and above		31	30	32
	TOTAL	111	97	97
GRAND TOTAL		211	190	193

Table 12. Rate of moisture reduction for IR20 and IR1561 using six alternative drying methods, IRRI 1974 dry season.

Drying method	IR20 drying time (hours)					IR1561 drying time (hours)				
	1	2	3	4	5	1	2	3	4	5
Concrete/cement	19.1	18.0	14.8	13.2	13.0	19.2	17.3	14.5	13.0	12.9
Polyethylene sheet(clear)	19.0	16.8	15.7	14.1	13.8	18.5	17.0	16.0	14.4	13.8
Woven mat	17.0	15.5	14.6	13.5	13.5	18.3	15.8	15.5	14.3	13.9
Synthetic jute sack	17.8	16.0	15.5	14.1	14.1	17.7	15.4	15.0	14.3	14.0
Asphalt	17.9	15.7	14.4	13.3	13.3	18.0	16.8	15.1	13.8	13.7
Mechanical (control)	17.7	15.1	13.3	-	-	16.0	14.7	13.6	-	-

Table 13. Percent head and milled rice yields of IR20 and IR1561 for alternative drying methods, IRRI 1974 dry season.

Drying method	IR20			IR1561		
	head rice	broken rice	total milled	head rice	broken rice	total milled
		percent			percent	
Concrete/cement	57.2	13.4	70.6	57.6	13.8	71.4
Polyethylene sheet (clear)	58.2	12.2	70.4	56.4	14.6	71.0
Woven mat	59.6	11.0	70.6	56.9	14.1	71.0
Synthetic jute sack	58.4	12.0	70.4	56.5	14.6	71.1
Asphalt	60.1	10.6	70.7	58.6	12.6	71.2
Mechanical (control)	59.4	12.5	71.9	62.6	10.6	72.6

Table 14. Alternative land preparation treatments, Gapan, Nueva Ecija 1973 wet season.

Treatment	Land preparation method			
	Primary		Secondary[a]	
	Power source	Implement	Power source	Implemen
1	65 hp tractor	rotary tiller	carabao	comb harrow
2	14 hp tiller	rotary tiller	carabao	comb harrow
3	7 hp tiller	moldboard plow	7 hp tiller	comb harrow
4	carabao	moldboard plow	7 hp tiller	comb harrow
5	carabao	moldboard plow	carabao	comb harrow

a/ Secondary tillage consists of two passes over the field repeated three times at one-week intervals.

Table 15. Site characteristics, soil conditions and level of inputs used in land preparation trials, Gapan, Nueva Ecija, 1973 wet season.

Site	Land Preparation Technique[1/]	AREA (M^2)	Labor input Hr/Ha plow	harrow	total	Fuel cons. (lit/ha)	Initial soil Depth (cm) 35 psi	70 psi	Final soil Depth (cm) 35 psi	70 psi	Mean Yield (t/ha)
Marilo					Shallow hardpan						
	T1	1303	3.52	30.32	33.84	13.38	11.50	21.00	17.5	26.3	3.85
	T2	1009	6.20	30.22	36.42	11.85	12.15	24.35	19.2	24.5	3.80
	T3	1299	12.45	12.44	24.89	31.62	11.5	22.4	18.0	25.4	3.65
	T4	1198	27.10	11.34	38.44	16.99	12.3	21.2	19.2	24.6	3.88
	T5	1328	26.96	31.06	58.02	-	11.2	19.1	17.5	21.92	3.74
Pulo I					Medium hardpan						
	T1	642	5.09	40.02	45.11	19.29	6.8	13.05	14.15	19.15	3.97
	T2	734	7.60	40.59	48.19	15.86	8.75	13.55	12.5	17.95	4.00
	T3	712	13.38	20.56	33.94	46.70	7.45	14.50	11.9	14.8	4.14
	T4	658	33.99	19.84	53.83	31.54	7.7	13.6	12.0	14.85	4.01
	T5	702	32.28	40.34	72.62	-	8.6	13.8	12.55	16.25	3.94
Pulo II					Deep hardpan						
	T1	718	4.41	42.06	46.47	18.76	10.9	22.25	20.15	31.05	3.53
	T2	849	6.96	41.74	48.70	12.90	10.9	20.8	17.95	24.85	3.57
	T3	902	9.00	19.76	28.76	31.16	10.95	23.15	19.7	30.3	3.65
	T4	844	26.91	21.32	48.23	27.08	9.00	19.50	15.05	23.65	3.57
	T5	779	26.58	39.24	65.82	-	9.25	20.00	21.0	28.1	3.71
Kapalangan					Rainfed						
	T1	830	6.54	47.38	53.92	27.74	6.55	14.8	11.4	16.85	3.08
	T2	846	10.72	53.31	64.03	20.30	5.95	15.05	12.85	18.65	2.93
	T3	-	-	-	-	-	-	-	-	-	-
	T4	774	60.92	21.02	81.94	28.37	5.10	15.70	12.1	16.00	2.97
	T5	843	62.62	65.52	128.14	-	6.15	15.50	13.6	18.55	3.01

1/ Data represent average of two replications:
T1 - Large tractor plowing - carabao harrow
T2 - Large tiller plowing - carabao harrow
T3 - Small tiller both plow and harrow
T4 - Carabao plow - small tiller harrow
T5 - Carabao only

Table 16. Results of sample soil analysis from land preparation trials, Nueva Ecija, 1973 wet season.

	Shallow (Marilo)	Medium (Pulo I)	Deep (Pulo II)	Rainfed (Kapalangan)
		Mechanical Separates (Percent on air dry basis)a/		
Silt	30.40	38.45	26.90	29.90
Sand	16.30	23.[illegible]	12.40	28.05
Clay	53.20	37.55	60.65	42.05
Texture	Silty clay	Silty clay	Silty clay	Silty clay
		Chemical Constituentsb/ (Mean Values)		
Organic matter(%)	1.94	1.59	1.61	1.25
Phosphorus (ppm)	11.90	12.10	6.50	7.12
Potassium	127.10	97.80	116.60	99.12
pH	7.18	6.81	6.57	5.90

a/ Average of twenty trials per site.

b/ Average of four trials per site.

Table 17. Table of means[1/] for weed weight (g/0.2 m^2) from alternative tillage trials.

Site(s)	Treatment	Weeding W1	Weeding W2	Weeding W3	Ave. Treatment Means
Marilo (shallow hardpan)	T1	2.68	20.28	25.05	16.00
	T2	2.25	15.12	18.82	12.07
	T3	3.62	19.40	26.55	16.52
	T4	3.15	17.02	20.45	13.54
	T5	3.75	17.85	16.10	12.57
Weeding means		3.09 a	17.94 b	21.40 b	
Pulo I (medium hardpan)	T1	6.22	16.72	26.00	16.32
	T2	5.82	8.78	30.40	15.00
	T3	3.98	11.32	10.55	8.62
	T4	6.50	6.72	19.38	10.93
	T5	6.88	28.85	40.60	25.44
Weeding means		5.88 a	14.48 b	25.42 c	
Pulo II (deep hardpan)	T1	4.12	3.85	16.22	8.07
	T2	3.22	7.55	17.88	9.55
	T3	2.58	3.98	17.75	8.10
	T4	2.92	4.98	11.80	6.57
	T5	1.75	3.45	12.58	5.92
Weeding means		2.92 a	4.76 a	15.24 b	
Kapalangan (rainfed)	T1	1.28	19.70	8.55	
	T2	1.08	13.80	23.28	
	T3	-	-	-	
	T4	1.82	16.80	18.60	
	T5	10.00	26.65	46.52	
Weeding means		3.54 a	19.06 b	25.49 c	

$LSD_{.05}$ (W- means at each S x T) 11.62 g/0.2 m^2

$LSD_{.05}$ (W- means at each W x T) 15.65 g/0.2 m^2

1/ Weeding means at each location followed by a common letter are not significantly different at the 5% level.

Table 18. Table of means[1/] for grain yield (t/ha) from alternative tillage trials.

Site	Treatment	Weeding W1	W2	W3	Ave. Treatment Means	Site Means
Marilo (shallow hardpan)	T1	3.78	3.77	4.01	3.86	
	T2	4.40	3.58	3.42	3.80	
	T3	3.64	3.78	3.54	3.65	
	T4	4.17	4.16	3.32	3.88	
	T5	3.92	3.69	3.60	3.74	3.79 b
Weeding means		3.98 a	3.80 ab	3.58 b		
Pulo I (Medium hardpan)	T1	4.30	4.07	3.53	3.97	
	T2	4.46	3.86	3.69	4.01	
	T3	4.46	4.19	3.76	4.14	
	T4	4.23	4.04	3.75	4.00	
	T5	4.52	3.52	3.78	3.94	4.01 a
Weeding means		4.39 a	3.94 b	3.70 b		
Pulo II (Deep hardpan)	T1	3.86	3.77	2.97	3.53	
	T2	4.03	3.54	3.13	3.57	
	T3	3.96	3.85	3.14	3.65	
	T4	3.74	3.80	3.16	3.56	
	T5	3.80	3.90	3.43	3.71	3.61 b
Weeding means		3.88 a	3.77 a	3.16 b		
Kapalangan (Rainfed)	T1	3.40	3.16	2.68	3.08	
	T2	3.10	2.94	2.74	2.93	
	T3	-	-	-	-	
	T4	3.28	2.98	2.66	2.97	
	T5	3.36	2.93	2.66	2.98	2.99 c
Weeding means		3.28 a	3.00 ab	2.68 b		

$LSD_{.05}$ (G - means at each S x T) 0.77 t/ha)

1/ Weeding means at each location followed by a common letter are not significantly different at 5% level.

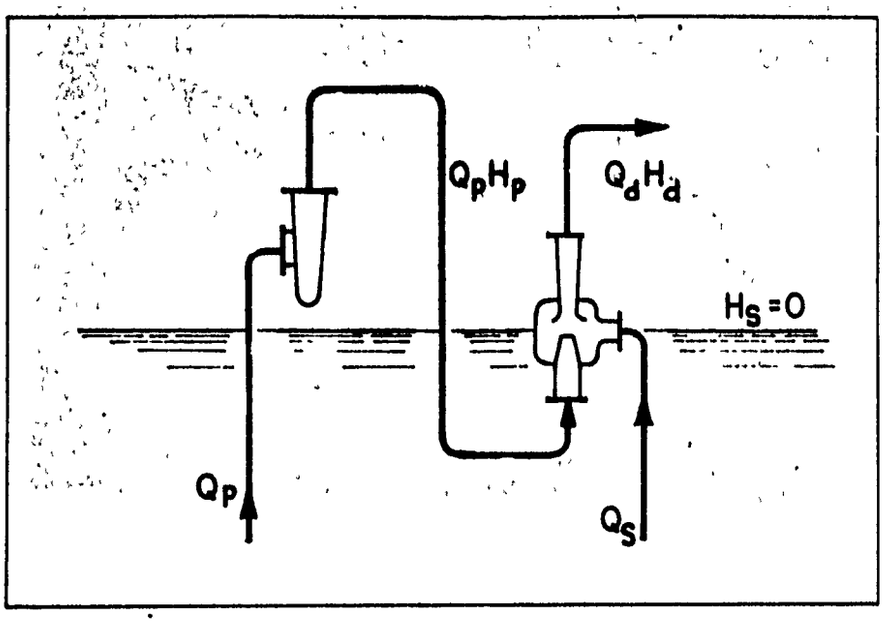

Fig. 1 A low lift irrigation pumping arrangement which utilizes a centrifugal-jet pump combination.

Fig. 2 Experimental jet pump, area ratio (0.125)

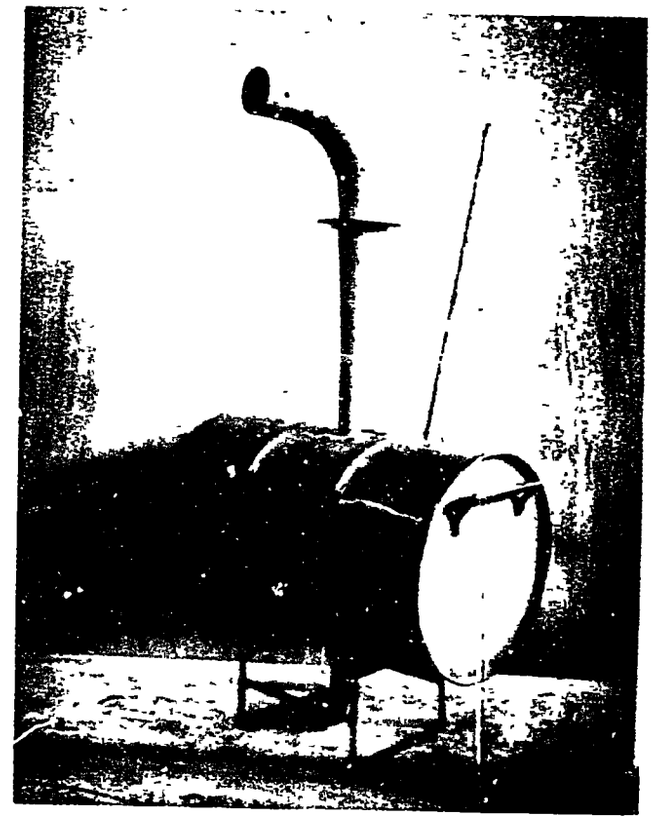

Fig. 3 Jet flow pump, first prototype.

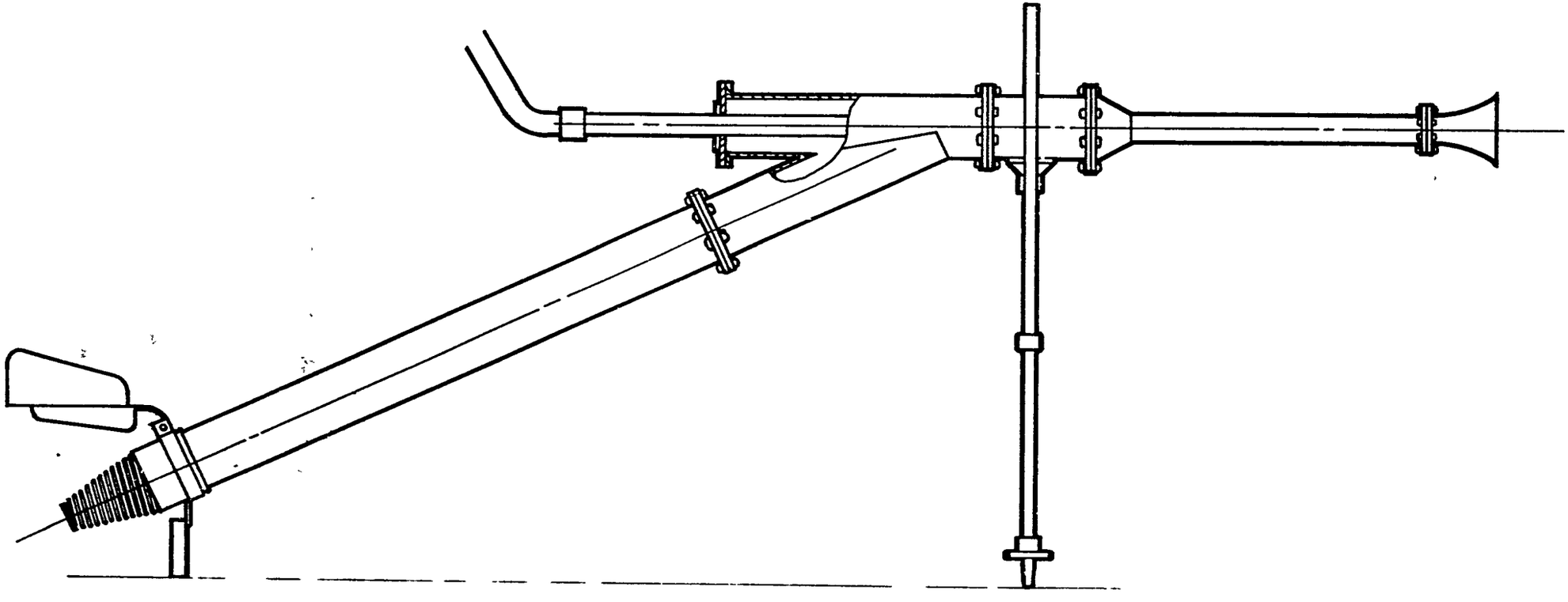

Fig. 4 Design configuration for a portable jet-flow pump.

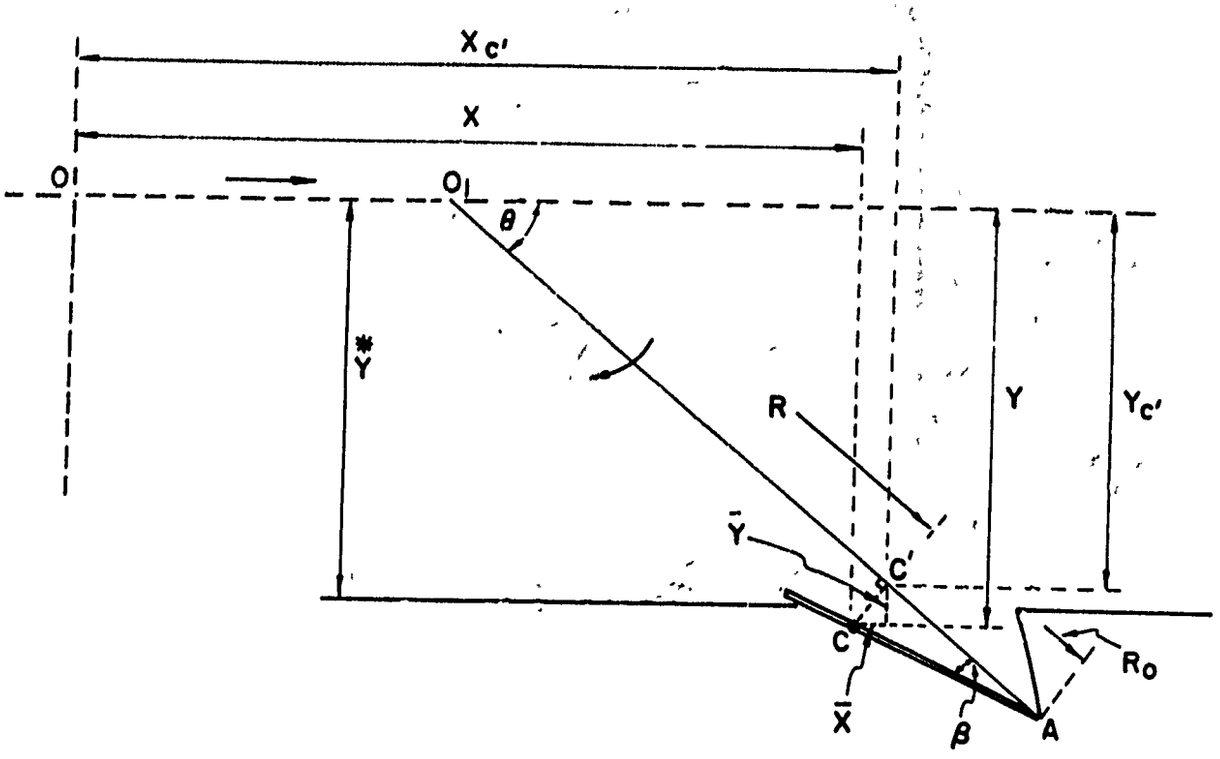

Fig. 5 Coordinate system used in determination of lug trajectories.

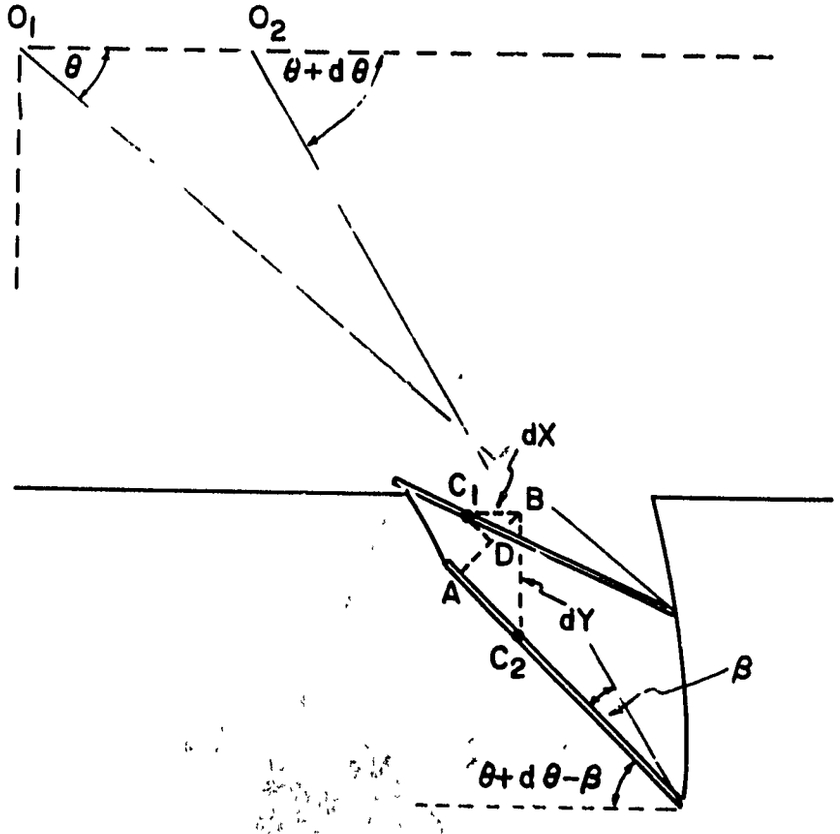

Fig. 6 Illustration of a single increment of lug displacement.

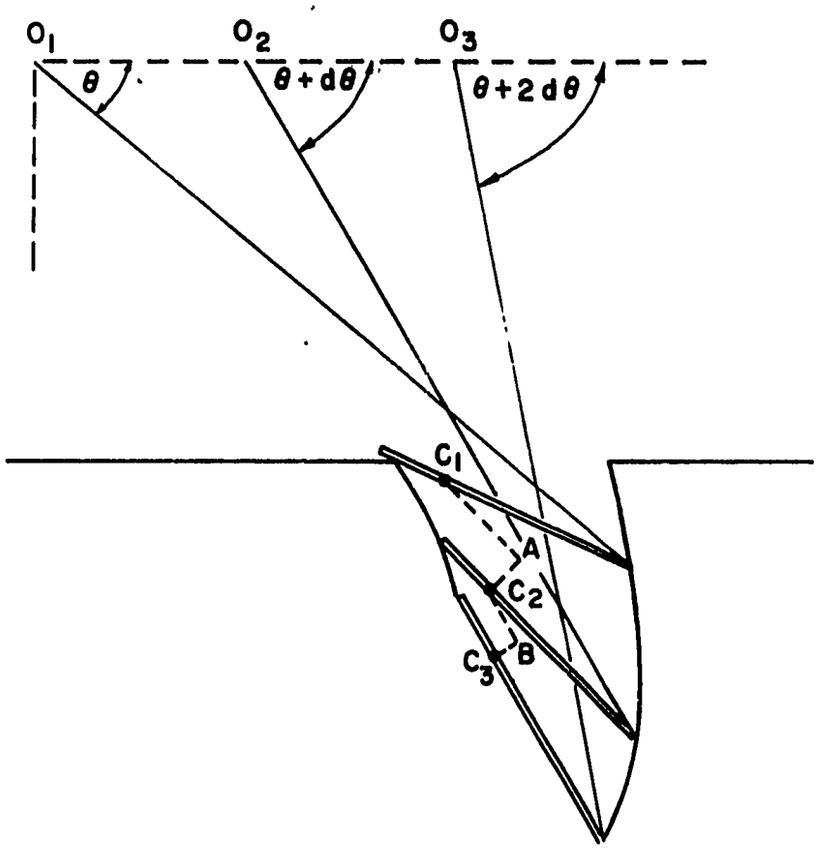

Fig. 7 Elements of normal and tangential lug displacements. Total normal displacement is obtained by numerically summing elements such as AC_2 and BC_3. Elements C_1A and C_2B etc. are summed for total tangential displacement.

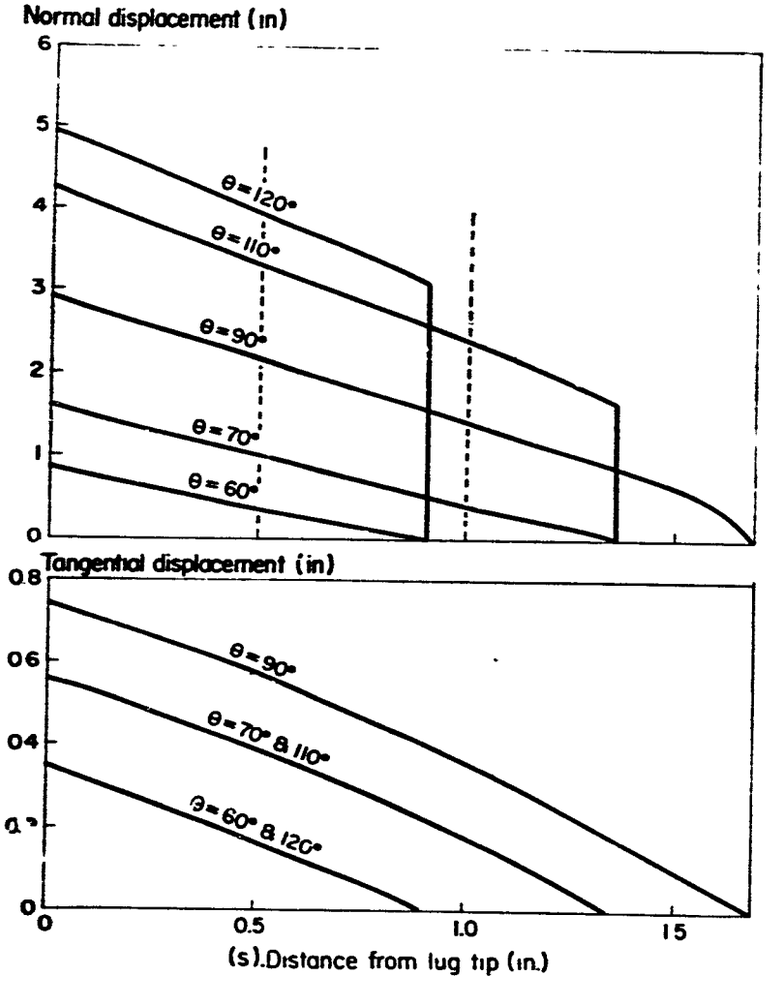

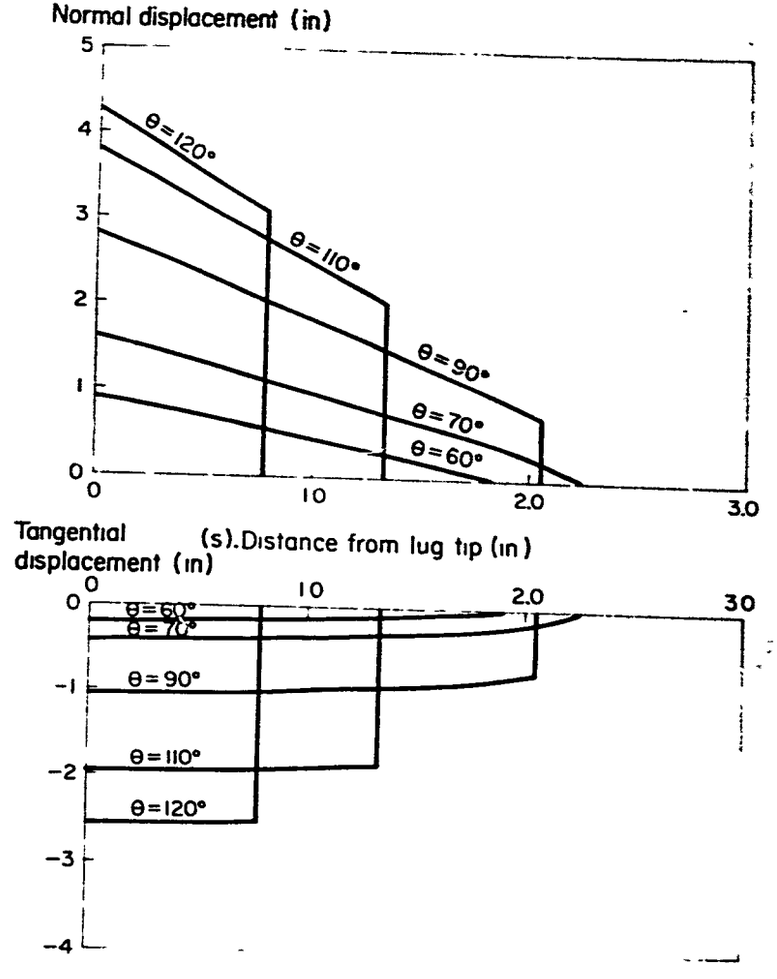

$\beta = 0^{\circ}$

$\beta = 35^{\circ}$

Fig. 8 Normal and tangential displacements of points on a lug relative to the soil for the case in which travel reduction is 55.6 percent and sinkage is 1.7 in. Lug angle β = 0° (left) and 35° (right).

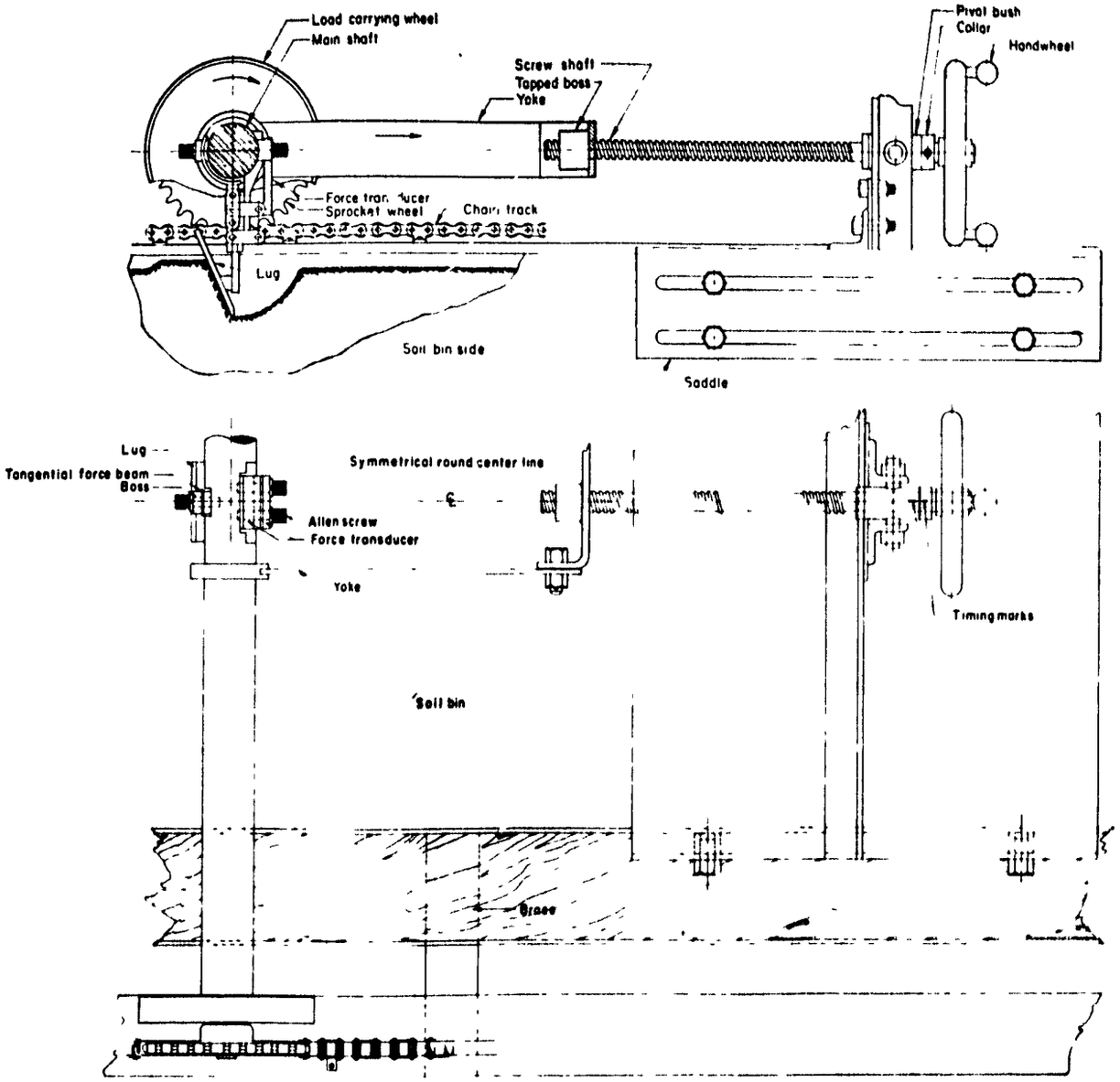

Fig. 9 Schematic diagram of soil bin apparatus.

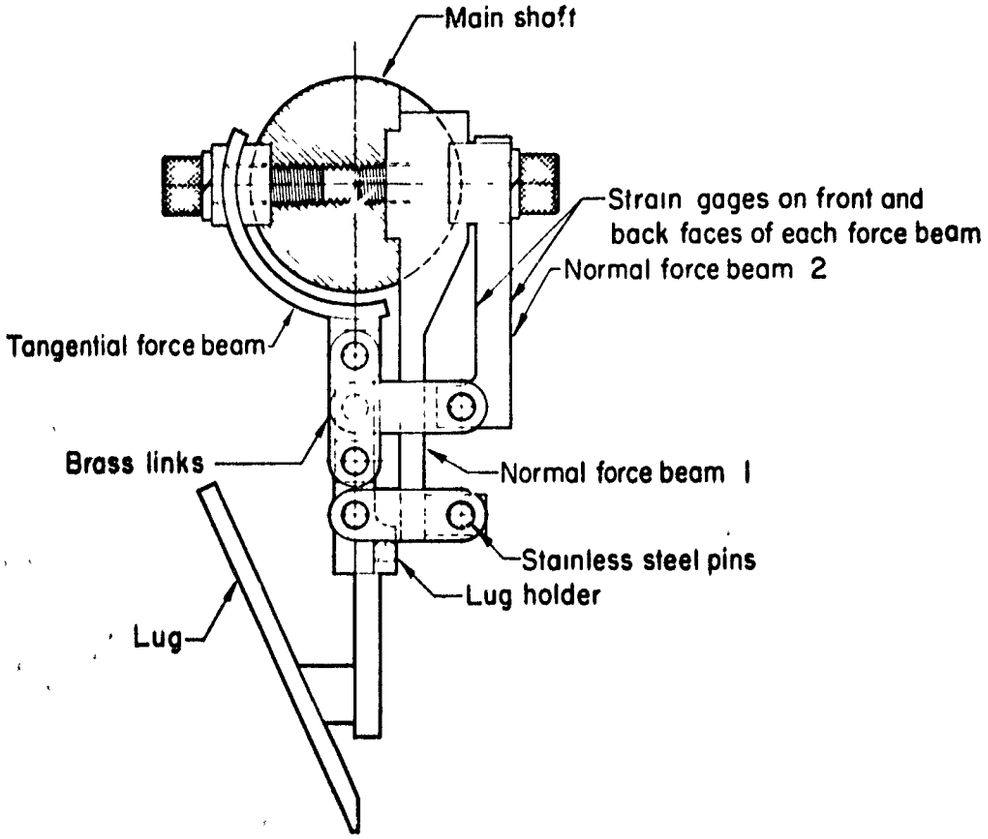

Fig. 10 Schematic diagram of system of transducers (strain gages mounted on beams) used to measure lug forces.

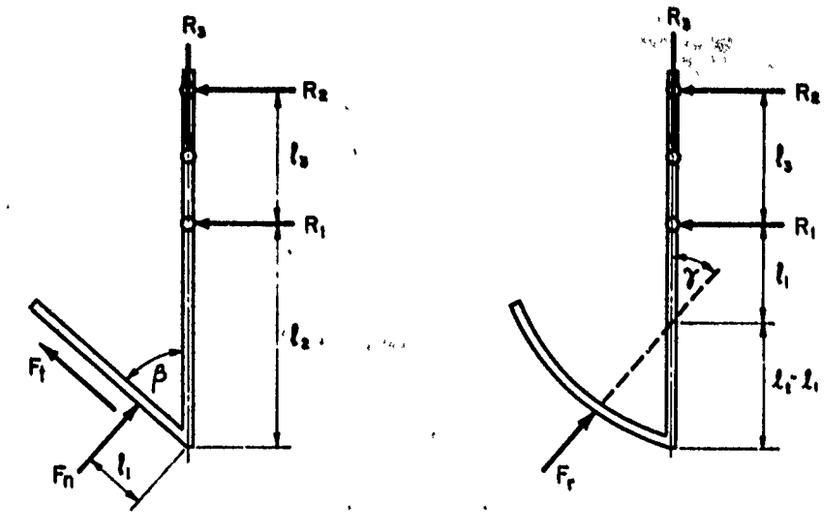

$$F_n = R_3 \sin\beta + (R_1 + R_2)\cos\beta \qquad \tan\gamma = \frac{R_1 + R_2}{R_3}$$

$$F_t = R_3 \cos\beta - (R_1 + R_2)\sin\beta \qquad F_r = (R_1 + R_2)\sin\gamma + R_3 \cos\gamma$$

$$\ell_1 = \frac{R_1 \ell_2 + R_2(\ell_2 + \ell_3)}{F_n} \qquad \ell_t = \frac{-R_2 \ell_3}{(R_1 + R_2)}$$

Fig. 11 Resolution of forces measured on the lug by individual transducers.

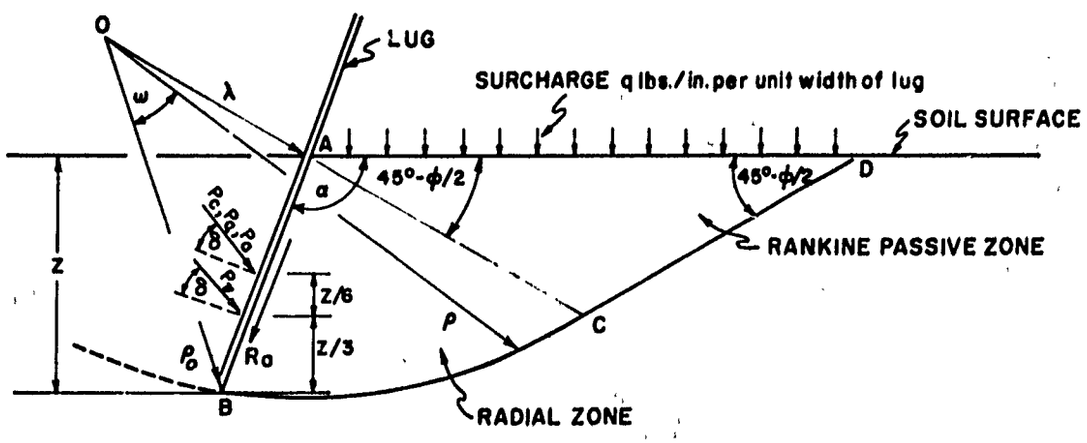

Fig. 12 Force diagram for lug-soil system in the theoretical horizontal failure phase.

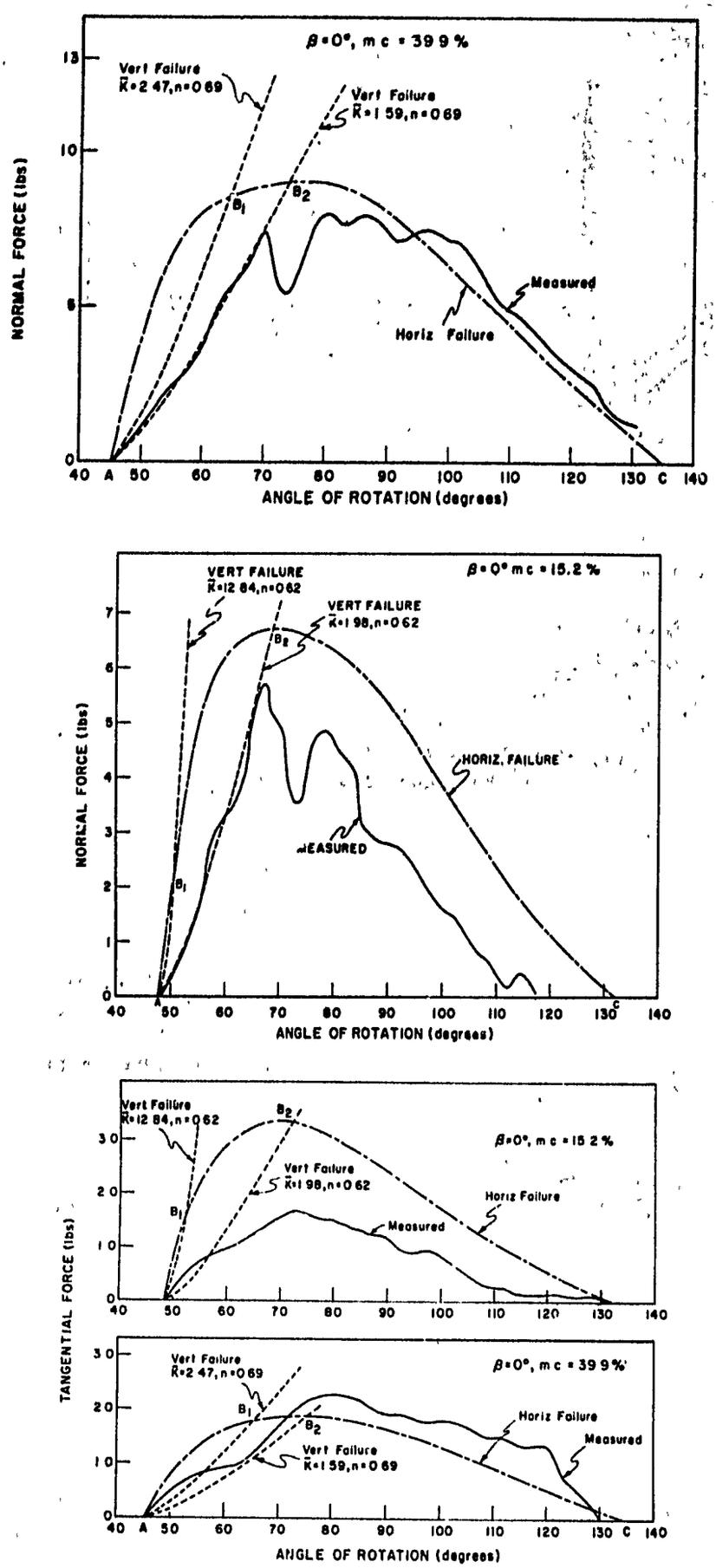

Fig. 13. Comparisons of theoretical and measured lug forces for a lug with $\beta=0^{\circ}$.

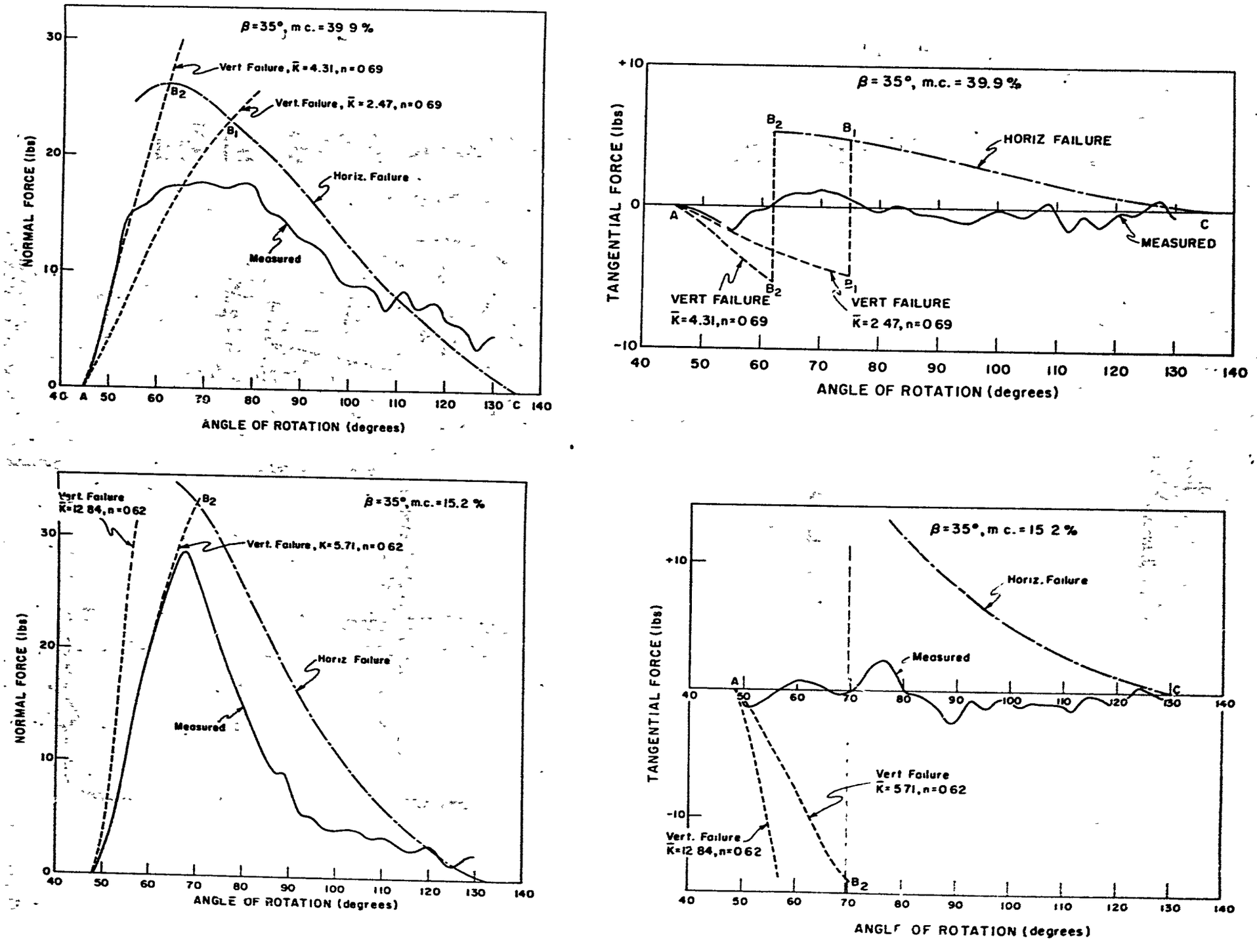

Fig. 14. Comparisons of theoretical and measured lug forces for a lug with $\beta = 35^{\circ}$.

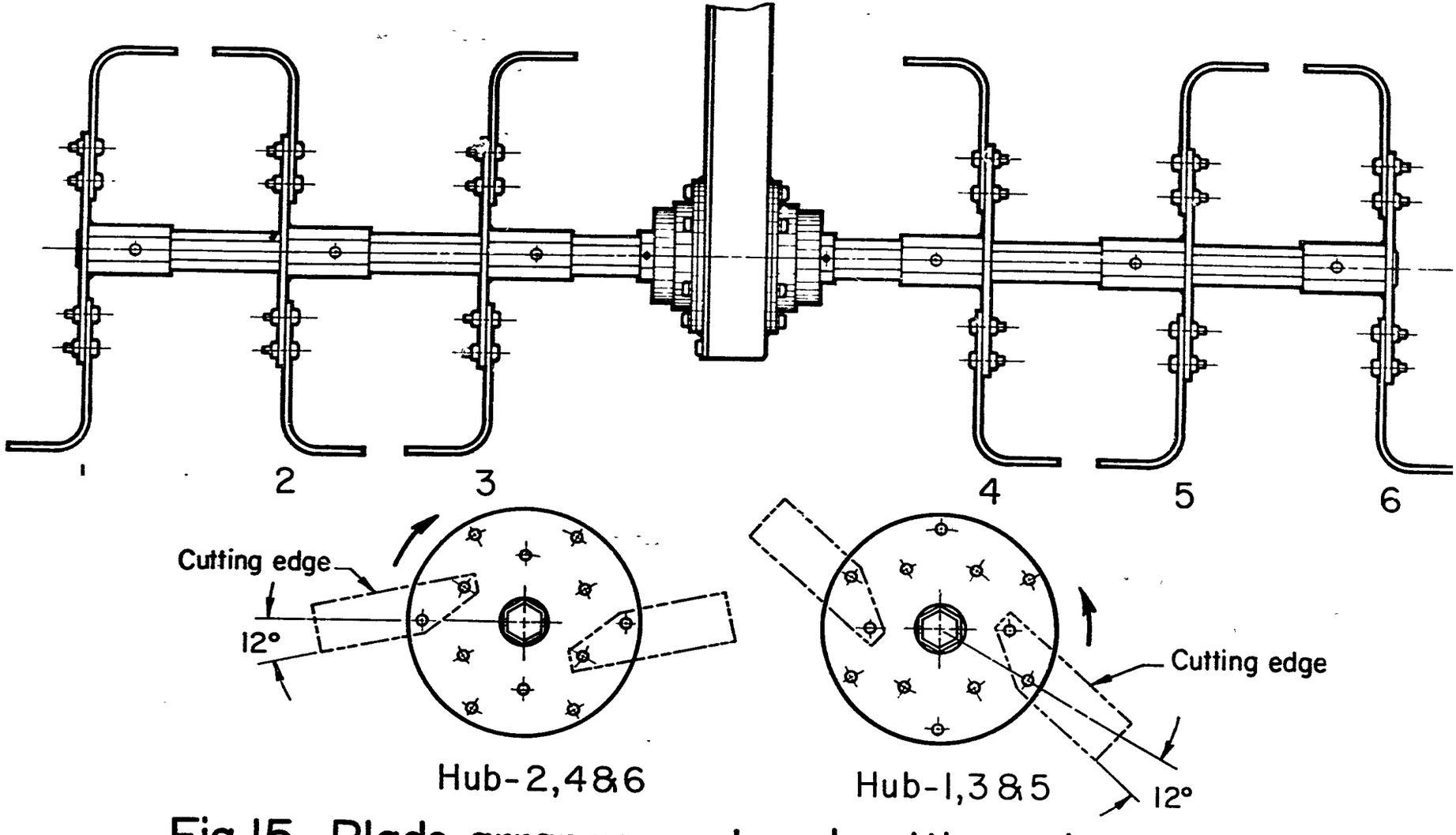

Fig. 15. Blade arrangement and cutting edge position

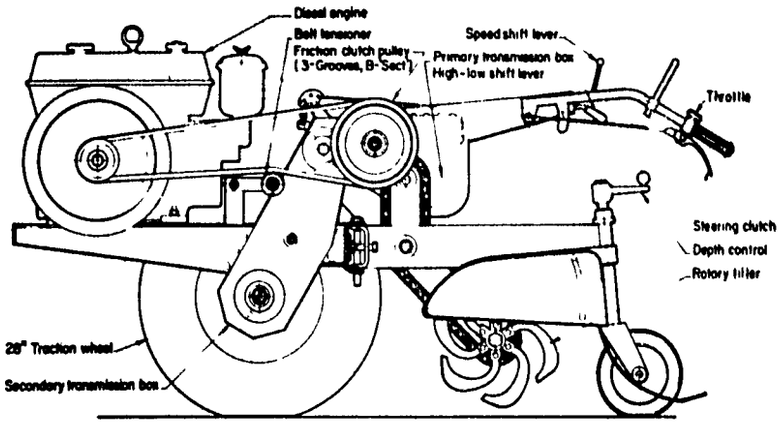

Fig. 16 Schematic drawing of 8-14 hp IRRI power tiller.

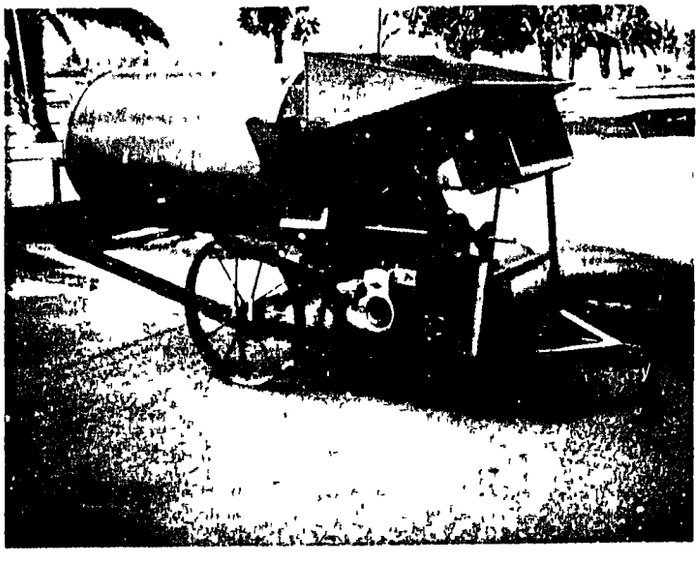

Fig. 17 The modified power grain cleaner with gravity feeding system.

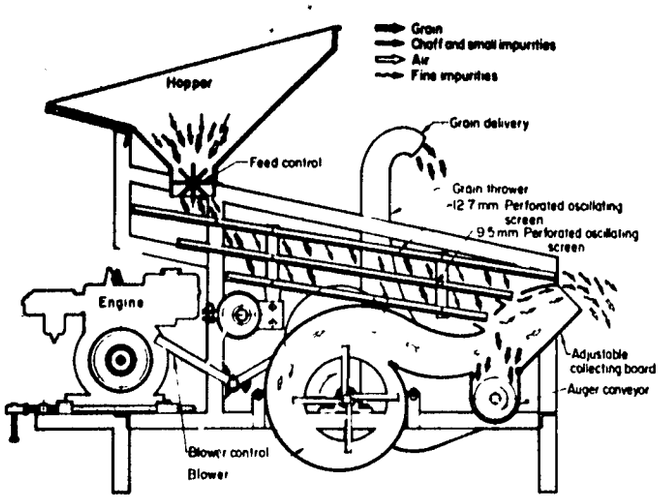

Fig. 18 Schematic drawing of Oscillating Grain Cleaner.

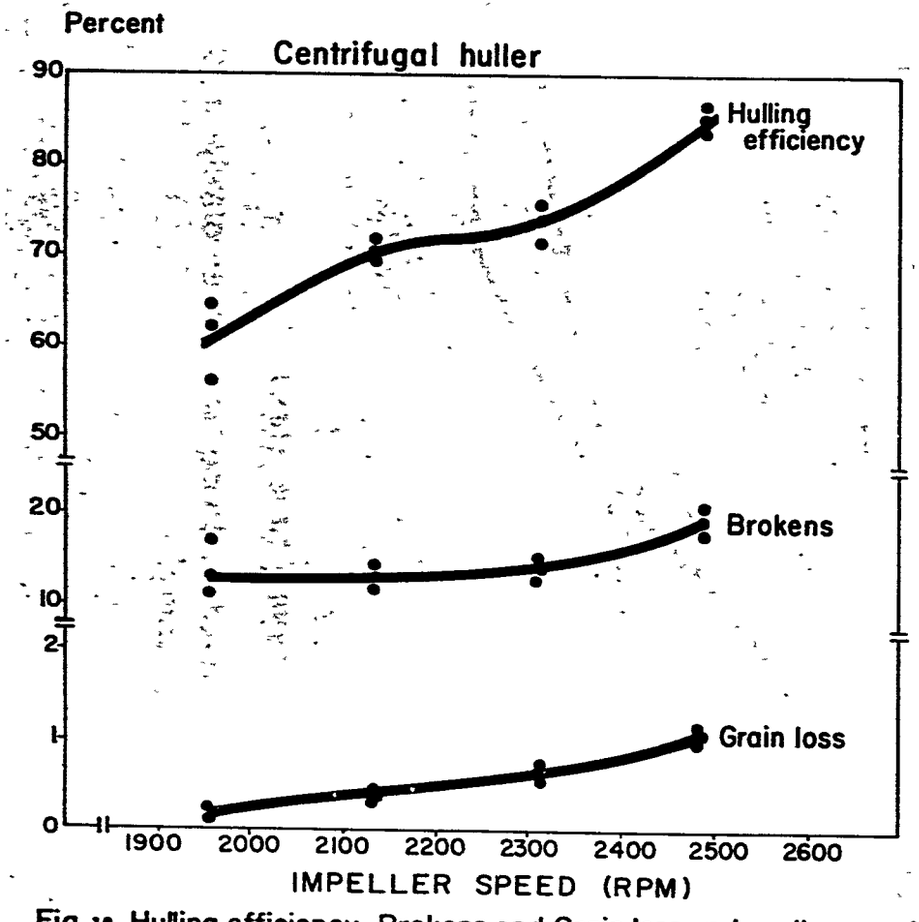

Fig. 19 Hulling efficiency, Brokens and Grain loss vs. Impeller speed.

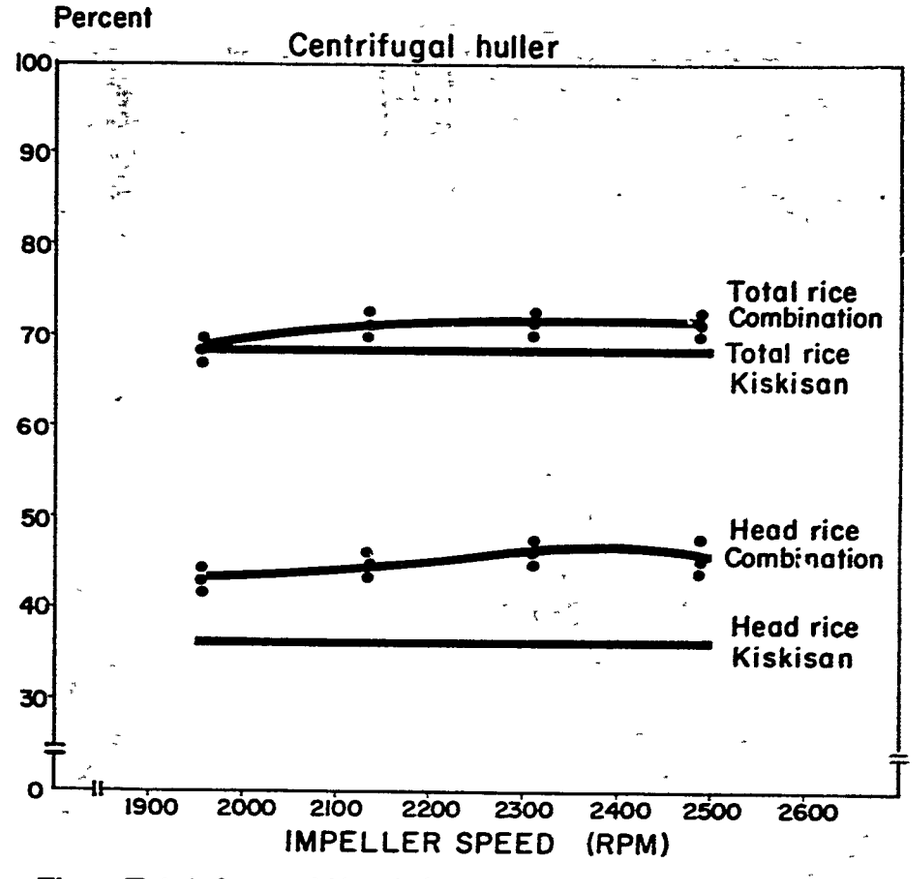

Fig. 20 Total rice and Head rice recovery vs. Impeller speed.

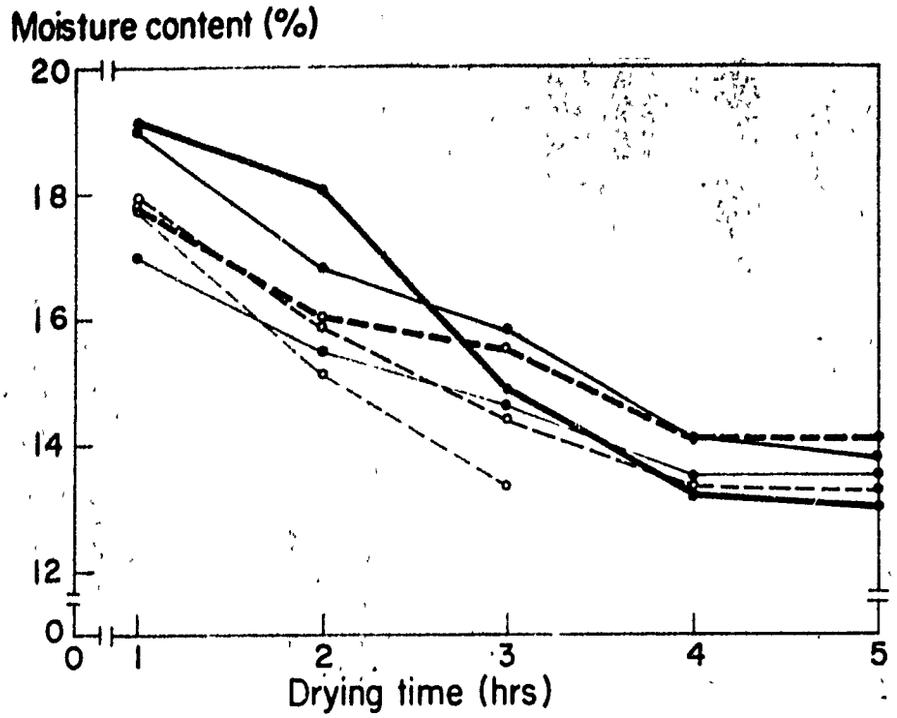

Fig. 21 Moisture content vs. drying time of alternatively-dried IR 20 rice variety.

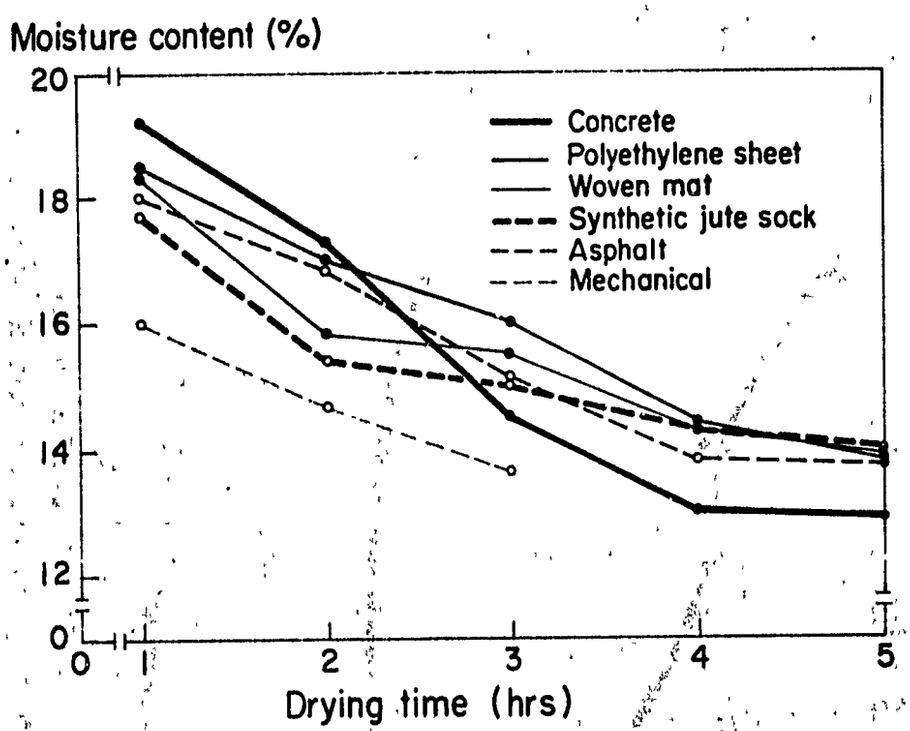

Fig. 22 Moisture content vs drying time of alternatively-dried IR 1561 rice variety.

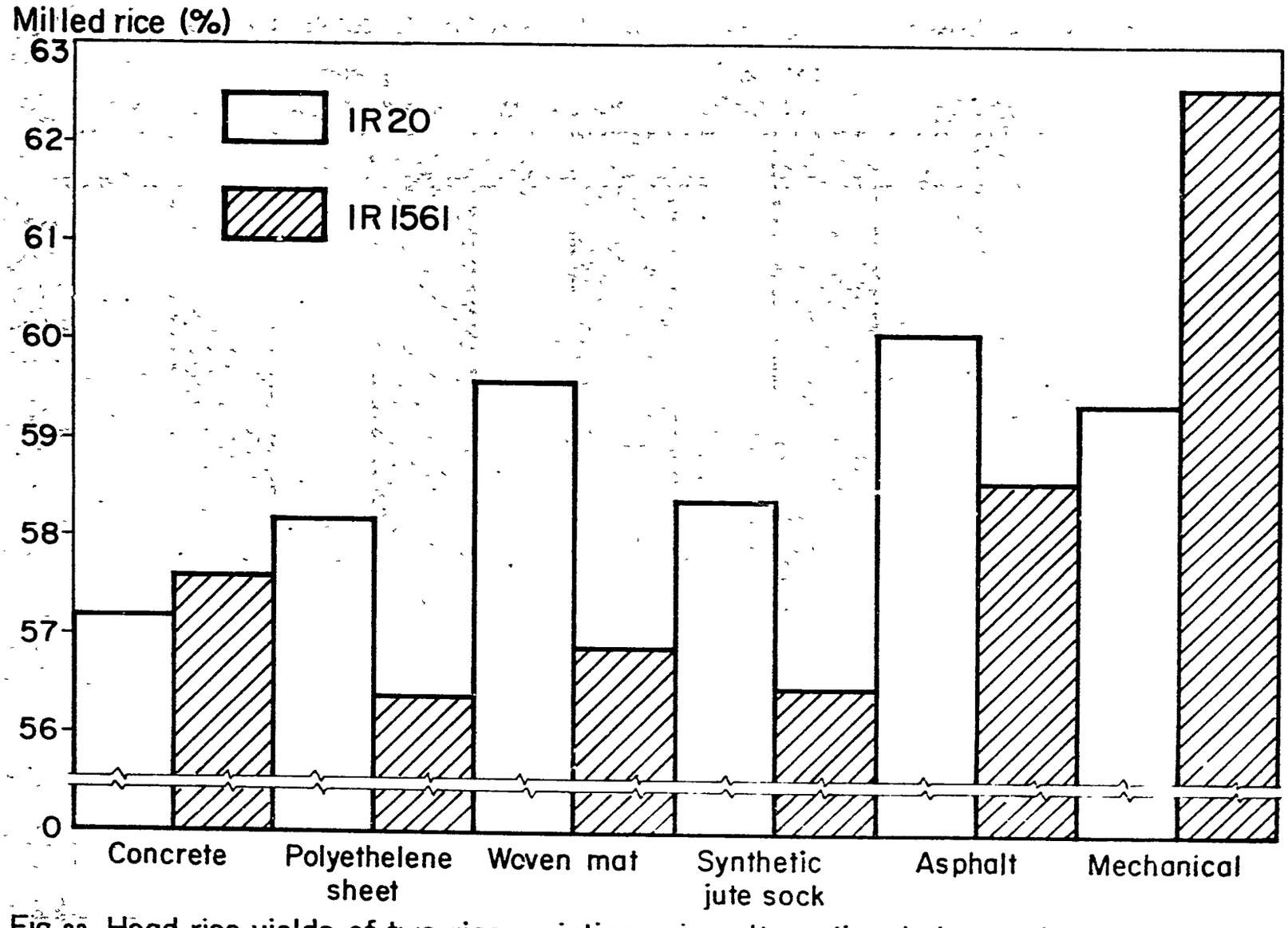

Fig. 23 Head rice yields of two rice varieties using alternative drying methods.

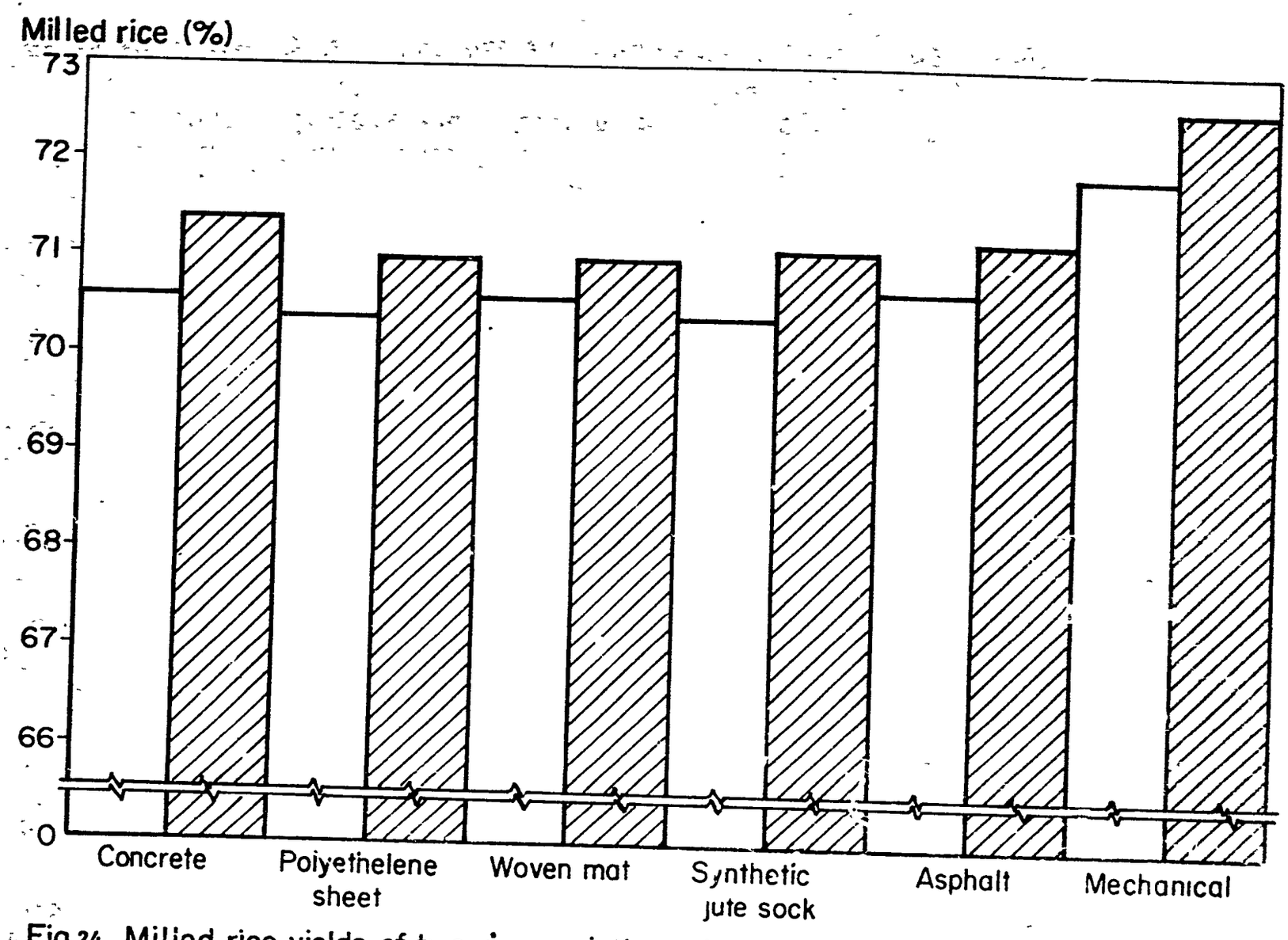

Fig.24 Milled rice yields of two rice varieties using alternative drying methods

Copies of this report have been filed with:

Office of Agriculture
Bureau for Technical Assistance
USAID, Washington, D.C.
(100 copies)

The Director
USAID, Manila, Philippines
(3 copies)