AGENCY FOR INTERNATIONAL DEVELOPMENT
WASHINGTON, D. C. 20523

BIBLIOGRAPHIC INPUT SHEET

FOR AID USE ONLY
BATCH # 28

1. SUBJECT CLASSIFICATION

A. PRIMARY
Serials — Y-AN20-0000-GG50

B. SECONDARY
Agriculture--Farm equipment--Tropics

2. TITLE AND SUBTITLE

Agricultural equipment development research for tropical rice cultivation; semi-annual progress report no.17,July,1973 to Dec.,1973

3. AUTHOR(S)

(101) IRRI

4. DOCUMENT DATE	5. NUMBER OF PAGES	6. ARC NUMBER
1973	55p.	ARC RP631.3.I61

7. REFERENCE ORGANIZATION NAME AND ADDRESS

IRRI

8. SUPPLEMENTARY NOTES *(Sponsoring Organization, Publishers, Availability)*

(Research summary)

9. ABSTRACT

10. CONTROL NUMBER	11. PRICE OF DOCUMENT
PN-RAB-587	

12. DESCRIPTORS

Agricultural machinery
Intermediate technology
Rice

13. PROJECT NUMBER

14. CONTRACT NUMBER
CSD-2541 Res.

15. TYPE OF DOCUMENT

AID 590-1 (4-74)

SEMIANNUAL PROGRESS REPORT NO. 17

JULY 1 TO DECEMBER 31, 1973

[redacted]

CONTRACT NO. AID/csd-2541

Agricultural Equipment Development Research

for Tropical Rice Cultivation

by

FRED E. NICHOLS
Evaluation Engineer

BART DUFF
Agricultural Economist

JOSEPH K. CAMPBELL
Associate Agricultural Engineer

Agricultural Engineering Department
The International Rice Research Institute
Los Baños, Laguna, Philippines

TABLE OF CONTENTS

Title	Page
Introduction and Summary	1
Progress Report	3
Machinery Design and Testing	4
5-7 hp tiller	4
8-14 hp tiller	4
Evaluation of manufacturers' tillers	5
Epicyclic transmission	5
Lugged wheel forces	6
Effect of tillage method on compacted layer depth in continuously planted, irrigated rice	6
Lowlift bellows pump	7
Lowlift irrigation pumps	7
Herbicide applicator	8
Axial flow thresher	8
PTO thresher	10
Stripper harvester	10
Batch dryer	11
Moisture tester	11
Centrifugal huller	12
Engleberg mill improvement	13
Economics of Mechanization	14
Grain loss study	14
Alternative solar drying methods	16
Economic evaluation of alternative systems of land preparation	16
Technical and economic characteristics of the Philippine rice processing industry	20
Small- and medium-scale industry study	21
Subcontract Development and Extension Activities	22
Work Plan	
Personnel List	
Tables	
Figures	

INTRODUCTION AND SUMMARY

The contents of this report, the 17th in a semiannual series, present the results of research and development activities carried out under IRRI/US-AID Contract No. csd-2541 for the period July 1 through December 31, 1973. The objectives of this contract are the design, development, and diffusion of small-scale agricultural equipment designs to manufacturers and, through them, to farmers in the developing countries. As a parallel objective, the project attempts to enhance the growth of income and employment opportunities through local manufacture, distribution and use of equipment designs that are compatible with local manufacturing facilities and complementary to existing farm labor and land resources.

A survey of five IRRI-authorized manufacturers in the Philippines indicated they produced slightly less than 3000 IRRI-designed machines during the first nine months of 1973. The direct employment effects for these firms from production of IRRI designs has been an increase of more than 200 full-time workers. As is common in many developing countries, these firms were able to increase capacity utilization by 50 to 60 percent, using existing plant and equipment. The five firms engaged the services of 45 subcontracting firms in the production of these machines. We anticipate the indirect employment effect in the manufacture of IRRI equipment to be equal to or larger than the direct impact.

Redesign of certain components on the 5-7 hp tiller were begun during the reporting period. Plans for a number of attachments for the tiller were completed and components in the power transmission system were strengthened for longer life. Sales of this machine have continued to grow.

Comprehensive field testing of the axial flow thresher was completed and the machine is now entering regular commercial production. Long-term testing for durability and marketing response uncovered some defects which were remedied prior to release of a commercial version. Farmers and manufacturers continue to demonstrate significant interest in the production and use of the thresher. Work continued on a stripper harvester and a PTO-driven thresher.

A machine designed to apply non-selective herbicide through a direct contact process is undergoing final design tests. Preliminary evaluations indicate good performance in achieving weed control in row-sown crops.

Evidence from the Agronomy and Entomology departments at IRRI indicate that considerable improvements in fertilizer and insecticide application efficiency can be achieved if they are placed in the root zone of the rice plant under flooded conditions. A project has been initiated to examine this situation in more detail and to design an applicator for it.

A new project was initiated to evaluate the relative increase in efficiency achieved through the addition of a simple jet pump mechanism to existing lowlift centrifugal pumping installations.

A wooden bin was designed for the 1-ton batch dryer to reduce the initial investment cost of this unit. In combination with the rice hull furnace, which provides an inexpensive source of heat, this machine has received considerable attention. We continued evaluation trials with a modified Engleberg type steel-huller mill. The results of the tests indicate potential for significant increases in total and head rice recovery through minor changes in the machine's fluted roller assembly. Work was also continued on the development of a separate centrifugal hulling unit which, when operated in series with the Engleberg mill, improves overall performance levels.

Two field surveys to examine the technical and economic characteristics of small-scale industries and the rice processing industry were initiated during the past six months. A series of comparative solar drying trials was begun to test the relative cost of using different surface materials in the Philippines and Vietnam.

The field phase of a comprehensive experiment to measure the yield effects of alternative land preparation techniques under lowland conditions was completed. The preliminary results indicate that, under the range of mechanization technologies employed in the experiment, there was no effect on yield. A significant response was obtained through the use of alternative weed control measures. The statistical analysis of data generated by a study of grain losses on 60 farms in the Central Luzon area has been completed. The results of this study indicate that time of harvest, variety, and the availability of irrigation water all affect the degree of grain loss at harvest. These results, combined with information on losses which occur during handling, threshing, and drying, indicate the operations which would benefit from the introduction of improved techniques.

Subcontract test and evaluation activities were reviewed and revised during the preceding six months. Subcontracts were renewed in a number of countries and a concentrated effort was made to provide more intensive technical and material support to selected programs. The subcontract program was reviewed by a USAID-sponsored team in August and September. Based on the recommendations of this team, a new proposal for intensified efforts in selected countries is being investigated.

Staffing

Mr. Joseph K. Campbell, Associate Professor of Agricultural Engineering at Cornell University, has joined the staff to work as an extension engineer. He is presently on a one-year sabbatic leave from the Engineering Department at Cornell.

Papers and publications

Samson, B. and B. Duff. 1973. The pattern and magnitude of field grain losses in paddy production. IRRI Saturday Seminar, July 7.

PROGRESS REPORT NO. 17
JULY 1 TO DECEMBER 31, 1973

The following personnel were responsible for these projects:

Machinery Design and Testing

1. 5-7 hp tiller	S. Gutierrez
2. 8-14 hp tiller	J. Policarpio, S. Gutierrez
3. Evaluation of manufacturers' tillers	C. Padolina
4. Epicyclic transmission	D. Gee-Clough
5. Lugged wheel forces	D. Gee-Clough
6. Study of tillage method on compacted layer depth in irrigated continuous rice	C. Padolina, F. Nichols
7. Lowlift bellows pump	N. Navasero
8. Lowlift irrigation pumps	J. Samuel
9. Herbicide applicator	N. Navasero
10. Axial flow thresher	B. Ramos, F. Nichols
11. PTO thresher	B. Ramos
12. Stripper harvester	J. Policarpio, G. Espiritu
13. Batch dryer	A. Manalo
14. Moisture tester	J. Arboleda
15. Centrifugal huller	A. Manalo
16. Engleberg mill improvement	J. Arboleda

Economics of Mechanization

17. Grain loss studies	B. Samson
18. Alternative solar drying methods	B. Samson, B. Duff
19. Economic evaluation of alternative systems of land preparation	N. Orcino
20. Technical and economic characteristics of the Philippine rice processing industry	Z. Toquero, B. Duff
21. Small- and medium-scale industry study	B. Duff

MACHINERY DESIGN AND TESTING

5-7 hp tiller

The tremendous market response in the Philippines to the 5-7 hp tiller continued with approximately 2500 units sold during 1973. The manufacturers have received insufficient feedback to determine if problems are being experienced by farmer-operators. This department has determined by contact with a few farmers as well as our own extensive field testing experience that some improvement is desired. Many manufacturers are using 8 or 9 hp engines for the unit. The original design was for a 4 to 6 hp engine.

The following design changes have been incorporated into a test machine and are being evaluated. The decision to release drawings for these changes to the manufacturers will be made when evaluation is completed:

1. The No. 40 roller chain drive of the second speed reduction in the transmission has been replaced by No. 50 chain so that a more even chain stretch may be obtained between the first and second speed reductions.

2. The countershaft for the second stage speed reduction has been increased in diameter from 1.91 cm to 2.54 cm. This modification is necessary to satisfactorily utilize a 9 hp engine.

3. The clutching arrangement is being modified by replacing the current belt idler with a sliding engine base and an over-center lever. Elimination of the belt idler should lengthen belt life.

4. External steering clutches designed to fit on the axle shaft and interposed between the transmission case and the wheels have been designed for installation as optional equipment.

5. Rotary ridging blades and rotary tillage blades have been redesigned to fit the 3.2 cm hexagonal axle. The mounting bracket of the rotary grass cutter was modified for installation in front of the tiller. A mounting bracket for installation of a medium size centrifugal water pump (fig. 1) was designed and tested. A two-wheel trailer design was completed. Drawings of these attachments are available to interested manufacturers.

8-14 hp tiller

Tests were conducted on the 8-14 hp tiller. The rotor shaft is driven through a sprocket which fits to the splined output shaft of the "jeep" gearbox used for the tiller transmission. The splined hub of the sprocket requires an extensive overhang to clear the gearbox. The hub failed during testing due to the high stress load. Steering clutch dogs failed early in the test. This failure was caused by extensive wear of the clutch dogs causing slippage and difficulty in steering.

The drive design is undergoing revision to permit realignment of the rotor shaft drive and primary ground drive. This will reduce the sprocket

overhang, reduce the hub stress, and provide a more compact design. The dog clutches are being fabricated from higher carbon steel and will be hardened by heat treatment. Upon completion of these revisions, the tiller will undergo further field evaluation.

Evaluation of manufacturer's tillers

The demand in the Philippines for tillers powered by 5-7 hp engines encouraged numerous manufacturers to fabricate tillers of their own design or copied from the IRRI-developed machine. Three of these manufacturers requested assistance of the department in testing their commercial prototypes. Each prototype received was subjected to our standard test procedure and operated for a minimum of 100 hours. Each machine experienced failure during the 100-hour test. Many of these failures were similar to the failures experienced with the initial production prototypes of the IRRI tiller. When the machines were disassembled and inspected, many of the failures could be attributed to improperly machined parts or incorrectly assembled components. The manufacturers involved were provided a complete report of the test results and recommendations for improvement of their respective designs.

The manufacturers and this department have received insufficient feedback from owner-operators to fully determine the problems encountered or improvements desired in the 5-7 hp IRRI tiller. Plans are nearly complete for an extensive survey of tiller owner-operators. Names and addresses of the dealers of each company as well as a listing of all direct-purchase machines have been obtained. We will interview and obtain data from a selected number of tiller owner-operators. Data to be obtained will include total hours of operation, total hectares tilled to date or in the past year, failures experienced, frequency of failure, method of repair, source of repair parts, and who made the repair. We will also attempt to obtain some performance data in regard to daily productive output under various conditions and other operational costs. This information will provide a basis for additional design improvement in this tiller as well as future tillers. Complete reports of each company's tiller will be provided to the individual companies. The collection of data for this survey has been delayed due to extremely limited fuel supply. Hopefully the fuel supply situation will be sufficiently improved in early 1974 to undertake this survey.

Epicyclic transmission

An epicyclic or planetary gear system is able to provide very high speed reduction in a small space. There are several possible ways in which epicyclic units could be utilized in power tiller transmission with advantage. One unit in the transmission could be used to provide a combination clutch and speed reduction. The V-belt tensioning type of clutch now commonly used on tillers could be discarded. Two units, on the final drive shaft, could be used to provide main clutch, final speed reduction, and steering clutch functions. These units are normally made from precision cut gears and the technology required for successful production is well known.

An investigation is underway to determine whether or not an epicyclic unit can be fabricated from chain and sprocket components. A prototype transmission of this type has been built and successfully run at "no load". A dynamometer is being constructed to enable the unit to be studied under load.

Lugged wheel forces

One of the basic problems of mechanizing land preparation in lowland rice cultivation is that of obtaining traction in flooded paddy fields. A number of devices have evolved to provide better traction in soft soil conditions. Extendible wooden or steel strakes, chains and lugged wheels such as cage wheels or paddy wheels have been used with varying degrees of success.

Although cage wheels are widely used and considerable empirical testing work has been carried out, little is known of the mechanics of their operation in soft soil. Making certain assumptions as to stress-strain relations in the soil, a mathematical analysis has been carried out to predict under certain conditions the forces acting on the lug of a cage wheel. Laboratory experiments are now underway to ascertain the validity of the analysis.

Effect of tillage method on compacted layer depth in continuously planted, irrigated rice

Considerable controversy exists about the effect of large tractors, large power tillers, small power tillers, and animal power on the compacted layer depth in irrigated riceland. Many claim that under continuous cropping, large tractors and, to a degree, the carabao gradually increase the depth to the compacted layer until the land cannot be tilled with a large tractor. A long-term study was initiated to resolve the controversy on the effect of the four principal power sources -- large tractors (approximately 65 hp), large power tillers (10-15 hp), small power tillers (5-7 hp), and animal power -- for one soil type. The objectives of this study are to determine for the four principal power sources:

1. The effect on the compacted layer depth in an irrigated continuous crop system,
2. Weed growth differences, and
3. Yield differences under similar crop management practices.

Based on available information, it is believed that one can establish that the compacted layer will be deeper with large tractors than with other power source tillage methods. It is possible that this hypothesis is only true for continuous cropping on irrigated land. It may be possible to use any one of the four power-source tillage methods on a long-term basis in an irrigated two-crop rice system. In the two-crop system, the soil will be permitted to dry out completely between crops. With continuous cropping, the soil will be near the saturation level at all times, which may not permit a stable compacted layer to develop under the loadings imposed by large tractors. This study will continue for three to five years to seek an answer to the question for the soil type and irrigation-drainage system available at IRRI.

Two blocks of similar size, shape, soil type and past cultivation practices were selected for this study. One plot was divided into halves and the second plot on a 60-40 basis. The two half-plots will be tilled with the small power tiller and the large power tiller. The small section of the second plot will be prepared by the present carabao tillage methods. The larger section of the second plot will be tilled by the large tractor. The number and type of tillage operations on each plot will be similar to current farming practices. Since land preparation may not be adequate or leveling properly completed at all times, 'dapog' seedlings for transplanting will be used. Operation time for each power-source tillage method including manhours, fuel consumption, and other economic factors will be recorded. Fertilizer application rate, weed, insect and disease control practices will be standardized for all plots. Weed weight will be recorded two times per crop season.

Soil penetrometer readings were obtained for each plot prior to initial land preparation. The land was fully prepared and prior to transplanting, additional penetrometer readings were obtained on a random block design in each plot. Weed samples have been obtained twice for this crop season. Yield samples have just been obtained for this crop and the data for the initial crop season will be reported in the next semiannual report. Initial visual observations of the weed infestation indicate a definite difference in type and degree of weed infestation among the different power-source tillage methods. Yield samples should reflect these differences if they are of sufficient nature to affect the productive capacity of the rice crop.

Depending on the results obtained over the long term, more specific recommendations can be made available to manufacturers, other development programs, and interested governments on the appropriate power-source tillage methods for irrigated, continuous-crop rice systems.

Lowlift bellows pump

The lowlift, manually operated bellows pump has been described in reports 12, 13 and 15. The bellows is fabricated from an enamel-coated canvas which has a life of approximately 250 hours. During this reporting period an alternative method of mounting the bellows and a rubber bellows fabricated from a truck inner tube have been designed. The modifications are currently under test on the pump test fixture to determine if the changes provide increased service life.

Lowlift irrigation pumps

Despite the fact that only 20 percent of the area under rice cultivation in Asia and the Far East is irrigated, it produces 40 percent of the output. Pump irrigation is increasingly a major input in mechanized rice culture. It probably causes little displacement of the agricultural labor force in the process.

In view of this importance, studies on lowlift rice irrigation equipment have been initiated in the department. A survey of present day equipment used in rice irrigation indicates that the major limitation inherent in

all these units is the loss in efficiency whenever the actual operating conditions differ from the optimum. Attempts are being made to develop suitable methods or combinations to extend the range of operation of some of the more popular pumping equipment such as the centrifugal pumps, propeller pumps, and waterwheels. In particular, investigations are underway on the possibilities of using centrifugal-jet pump combinations, simple multistage propeller pumps, and motorized paddle pumps for rice irrigation and drainage. It is believed that the studies will reveal means for adapting present day pumping equipment for more efficient operation under the essentially lowlift but varying conditions encountered in rice culture.

Herbicide applicator

Concepts for a direct-contact herbicide applicator were described in report No. 15. The detailed description of the concept selected for further study is contained in report No. 16. The applicator was further evaluated during this reporting period and was found effective against weeds growing between rows of upland rice.

In a trial conducted under upland conditions at IRRI, herbicides used with the applicator were MCPA-K salt, 2,4-D, MON 2139 (glyphosate), and Paraquat applied at five different rates of application. All four herbicides were applied 25 days after seeding; 130 to 150 liters of solution were needed to moisten 1 hectare. Table 1 describes the weed control and crop toxicity ratings of the herbicides on plots of IR5 and C-4-63 observed at 14 and 30 days after treatment.

All treatments generally did not show toxicity except at higher rates of MCPA-K salt and 2,4-D. Both MON 2139 and Paraquat gave good control as observed at 14 days after treatment. Profuse growth of weeds that were not killed within the rows of rice and another young crop of weeds observed at 30 days after treatment brought the weed control rating much lower than the previous rating. Only fair weed control on plots treated by 2,4-D and MCPA-K salt was probably due to incorrect time of application for these herbicides.

Figure 2 shows weed control vs application rate.

Further testing of the applicator will be undertaken with particular attention to the time of application. The use of other herbicides and combinations of selective and non-selective herbicides will also be tried with the applicator.

Axial flow thresher

Design features and the principles of operation of the axial flow thresher, released to manufacturers earlier this year, have been described in previous reports. Two production prototypes from different manufacturers were received early in this report period and subjected to field evaluation. The two threshers were initially tested in the Laguna area to determine if

threshing capacity and threshing efficiency were as high as exhibited by the second prototype. Upon completion of this test, the machines were transferred to Bulacan and southern Nueva Ecija for long-term durability and reliability evaluation. Our goal was to thresh 200 tons with each machine. This was estimated to be at least one-half the average annual use for the thresher. Two typhoons passed through the test area and delayed testing, thus reducing our goal to 100 tons. The threshers were used by many farmers even during bad weather and effectively threshed wet, muddy rice. The thresher's ability to thresh under such adverse conditions elicited praise from the farmers. The tests were conducted under a wide range of field conditions and many different varieties until each machine had threshed 100 tons. The machines were then returned to IRRI for disassembly and inspection of all components to determine which components required revision. The following design revisions were made as a result of field evaluation:

1. The upper concave and cover were redesigned as separate components, each being hinged to permit easy access to the threshing cylinder (fig. 3). This permits rapid cleaning as the space between the concave and cover can clog with mud and wet chaff when threshing wet, muddy paddy. Separation of the two not only enables ease of cleaning but is easier to fabricate.

2. The spiral louvers were formed from heavier sheetmetal and designed to permit bolting to the concave. This provides a more rigid assembly and will facilitate replacement if required. The original louvers exhibited severe abrasive wear and the welds securing them to the concave bars failed.

3. The concave rods were increased to 0.635-cm diameter. The concave is now assembled by inserting the rods through drilled holes in the concave support. This allows for easier assembly, better quality control, and replacement, if necessary. The original 0.475-cm diameter rods exhibited abrasive wear in the feeding area. Also, it was difficult to weld the rods to the support frame , resulting in frequent weld failures during operation.

4. The engine was mounted on a simple sliding frame. An over-center linkage moves the engine and engages the drive. This design increases drive belt life and is easy to fabricate. Frequent belt failure was caused by the small clutch idler breaking the back of the drive belt.

5. The pegteeth are now made from standard 1.1-cm bolts to provide easy replacement and rotation for uniform wear. The pegteeth exhibited wear at a 45° angle from the tooth on the first five pegs in the feeding area. This wear was sufficient to have some effect on threshing performance. The original pegs were welded to the threshing drum, preventing easy replacement.

6. The blower housing was redesigned to permit easy assembly and disassembly. The fan drive hub was modified to include a double set screw arrangement. Fan blades failed on one machine and the fan hub drive shaft locking arrangement failed on both machines. Repair was quite difficult.

7. Various quality control defects such as incorrect belt size, misalignment of sheaves, poor welds, etc. were brought to the attention of the manufacturers.

Production cost, simplicity of maintenance, repairability and long-term reliability were carefully considered for the final design. For example, overall machine length was reduced by 6.5 cm to permit fabrication of two threshing drums from one standard size steel sheet. Drawings for the thresher were also reviewed. To provide more lucid drawings for the manufacturers and a better and simpler method of identifying drawings, a new drawing procedure and numbering system were instituted. This drawing procedure and numbering will be used for future IRRI machines.

A third prototype incorporating all the design changes was fabricated in the IRRI shop. This provided a check upon the drawings as well as upon the design changes. Machine performance was very good. Drawings have been supplied to four Filipino manufacturers, two subcontractors and two manufacturers outside the Philippines.

Farmers and manufacturers' response to the axial flow thresher was very encouraging during the test period. The manufacturers from whom we purchased the initial production prototype have been encouraged to produce machines as rapidly as possible for the market that is indicated by the farmer response during the field evaluation period. One manufacturer planned several field demonstrations during December 1973.

PTO thresher

PTO thresher development was limited this period as completion of the axial flow thresher was given higher priority. Tests were conducted to determine if the modifications outlined in report No. 16 would improve cleaning performance to a satisfactory level. The tumbling louver size was increased and the shape altered (fig. 4) to allow the grain to fall perpendicular to the air flow. The change provided little improvement in cleaning performance. The tumbling louvers were repositioned in relation to the conveying louvers to permit heavy grain to fall directly from a tumbling louver and be moved toward the grain trough. Chaff and other impurities remain suspended, tumbling continously until ejected at the annular outlet. Two brief tests of this modification showed improved cleaning performance. Testing and development will continue in 1974.

Stripper harvester

The design of a six-row stripper harvester (fig. 5) was described in report No. 16. Fabrication of the stripper mechanism and the ATV power unit was initiated during this period. The working drawings were nearly completed when the design engineer assigned to this project resigned. Work on the machine was thus delayed until a new engineer could be obtained to continue the project. Work is now progressing to complete the design and fabrication of the stripper harvester and power unit. The machine will be completed early in 1974 and field evaluation will determine its acceptability for Asian conditions.

Batch dryer

Report No. 14 contains a detailed description of the 1-ton capacity batch-type dryer which was released for production in 1972. During the current reporting period, a number of refinements in the design were carried out in conjunction with a series of economic evaluations. The economic investigations were undertaken to determine the relative costs of owning and operating the dryer utilizing alternative heat sources and bin assemblies.

An improved blade design has increased the air delivery of the axial vane blower from 49.5 to 58.0 cu m/min when operating at 2200 rpm and a static pressure of 2 cm of water. The clearance between the blade tip and the cylinder housing was also increased to 0.5 cm to facilitate manufacture and assembly.

In an effort to lower the cost of the dryer in light of rapidly increasing steel prices, a wooden bin was designed to utilize 0.48 cm tempered hardboard for siding, expanded sheetmetal for the grain floor, plastic sheeting for the plenum floor, and lumber for the supporting frame. The bin area is 5.95 sq m (2.44 x 2.44 m). This is 0.94 sq m larger than the metal bin model. The dimensions of the wooden bin utilizes standard 1.22 m x 2.44 m hardboard sheets with minimum wastage. The wooden bin has a capacity of 1.1 tons at a grain depth of 30 cm and 1.6 tons when the grain depth is increased to 45 cm. Tests of drying paddy in the wooden bin exhibited an average drying rate of 2 percentage points per hour with grain at a depth of 30 cm and 1.5 points per hour when the depth is increased to 45 cm. These drying rates are the same as rates secured in tests with the metal bin.

In addition, the cost of the wooden bin is about one-third that of the metal unit (table 2). The comparisons assume that the life of a wooden bin will be 60 percent that of a steel bin. This assumption may not do justice to the wooden bin for the wooden bin is easily repaired in the field. Also shown in table 2 are the costs using either kerosene or the IRRI-designed rice hull furnace as a means of raising air temperature. Figure 6 illustrates the per-ton drying costs for four heat source and bin combinations. The degree of annual utilization has a significant impact on average drying cost.

Moisture tester.

Moisture content is one of the most important factors affecting grain quality. Decisions regarding the preservation of rice are enhanced by monitoring the moisture content of the grain at harvest, during drying, storage, and milling.

With increased rice production and the increasing use of grain dryers, the availability of a simple, rapid, inexpensive moisture tester becomes increasingly important. Commercial moisture testers are manufactured and sold by industrialized countries. Importation of these testers by developing countries requires foreign exchange and can result in high prices to potential users. The objective of the present project is to design and develop a moisture tester that can be constructed from locally available materials but

which provides the same accuracy as imported units.

The construction and operating principles of four commercial conductance-type electronic moisture testers were evaluated and a circuit designed and constructed. Tests of the circuit using standard resistors in place of grain in the test cell indicated a resistance range response of 15 kilo ohms to 60 mega ohms (fig. 7). Measuring of the resistance of grain in the same cell showed that this corresponds to a moisture range of from 12 to 30 percent (w.b.).

A prototype (fig. 8) was constructed using parts obtained from local stores. The moisture tester consists of a galvanometer; power selector for OFF, AC, or battery operation; selector switch for standardization and low and high moisture ranges; standardization knob; and a push button switch for moisture content testing. The grain cell and the grain measuring dump cell are located in the lower portion of the front panel.

The prototype model is being calibrated against a standard oven method of determining moisture. Paddy samples with moisture contents falling between 12 to 30 percent are being used. For each lot of paddy, four test readings are taken with the prototype. In addition, the moisture content of five 30-g samples is determined by drying them in an oven for 72 hours at 100°c. A calibration chart will be developed using the results of these tests. To include the effect of temperature on the performance of the moisture tester, calibration tests will be made at 22, 27 and 32°C. Intermediate values will be interpolated to obtain necessary correction factors. The same procedure will be followed in testing moisture contents of corn.

Centrifugal huller

The Engleberg mill removes the hull (hulling) and bran (polishing) from the rice grain in a single operation, but in the process the grain is subjected to high temperatures and pressures which often result in large quantities of broken grains in the milled rice. Most modern rice mills separate the hulling and polishing into two operations to increase capacity, milling yield, and quality.

Imported small-capacity rubber roll or centrifugal hullers combined with a variety of polishers have not been economical for most village-level requirements. While the evidence is not yet conclusive, there appears to be scope for improved overall performance if, when using the Engleberg mill, a separate huller is added. The Engleberg itself can then be used for polishing, which does not require the close clearances of a combined single-pass hulling-polishing operation, thus reducing the forces acting on the grain and resulting in higher recovery rates.

The task in this project is, therefore, to design a simple, inexpensive hulling unit which is compatible in cost and capacity with existing Engleberg mills when the latter units are operated as polishers.

As has been described in previous reports, centrifugal hulling appears to show promise as a means of meeting the design criteria mentioned above. The centrifugal huller utilizes centrifugal force to impel the grain against an impact surface. Using data gathered from previous tests with centrifugal milling equipment, a new machine was fabricated consisting of a grain hopper, impeller, rubber impact ring, and a hull separator (fig. 9). Grain moves from the hopper to the impeller which propels itself against the rubber impact ring where the hull is sheared from the grain. A used automobile tire serves as the rubber impact ring. Air blast from the impeller provides separation of the hull from the brown rice.

Preliminary tests at a feeding rate of 200 kg/h and impeller peripheral velocity of 2393 m/min gave 80 to 90 percent hulling with 17 percent broken grains. Tests with this unit will be continued to determine whether capacity can be increased. Integrated tests using the Engleberg huller as the polishing machine in the system will also be initiated to determine whether the remaining 10 to 20 percent unhulled paddy can be successfully processed at the polishing stage without recourse to paddy separation and rehulling.

Engleberg mill improvement

Report No. 16 contains a description of the changes and additions incorporated into a commercially available Engleberg mill in an attempt to improve milling efficiency. Favorable preliminary tests were obtained as a result of simple changes made in the discharge valve, cylinder, perforated screen, and the insert lining of the top cover. Further tests with the mill using the modified discharge valve and perforated screen produced results consistent with those of the previous test. A total milling recovery of 68.4 percent and a head rice recovery of 38.4 percent were observed. Tests of the same sample in the laboratory mill (McGill Miller No. 2) showed a total and head rice recovery of 68.8 and 57.8 percent, respectively. The milled rice from the Engleberg mill, however, was darker.

For the current series of tests, a four-section, two-ribbed cylinder screw and a separate discharge section were fabricated (fig. 10). The milling process can best be evaluated by isolating the effect of each section on overall performance of the machine. The peripheral speed of the rice mill cylinder was also increased from 180 to 220 m/min. The higher speed corresponds to the cylinder peripheral velocity of the laboratory mill.

These and other modifications will be studied in an attempt to improve the performance of the mill. Arrangements will be made to test the improvements (weight-loaded gate, ribbed perforated screens, and semicircular lining insert) on one or two commercial rice mills in the vicinity of the Institute. Milling performance data, the degree of acceptability of the changes by operators/owners, and other observations will be collected.

ECONOMICS OF MECHANIZATION

Grain loss study

In report No. 16 we presented the preliminary results of a field study of grain losses in the Central Luzon area f the Philippines. The project had the following objectives: (1) to determine field loss characteristics incurred in harvesting-threshing operation and (2) to determine the factors which condition the level and pattern of field losses.

Field work for the project was conducted during 1972 wet and 1973 dry seasons. The 1972 wet season project included 50 sample farms located in one rainfed and two irrigated barrios. A single variety, IR20, was used in the wet season study. The 1973 dry season project utilized 50 sample farms in the two irrigated barrios. Four high-yielding varieties were used. Harvest dates of 33 days after 50 percent flower (wet season) and 30 days after 50 percent flower (dry season) to be at or near optimum yield were selected based on prior studies. Two additional dates, 6 days earlier and 6 days later, and three additional dates, 5 days earlier, 5 days and 10 days later, were used for the wet and dry season, respectively.

Statistical analysis

I. Dry season

Examination of table 3 and fig. 11 indicate significant effects due to harvest date, drying methods (solar vs mechanical), as well as their interactions. Solar drying gave higher percent milled rice than the mechanical method in most cases, although more so at early harvest dates than those later in the season.

Averaged over all farms, the first harvest gave the lowest percent milled rice for both solar and mechanical drying. The third harvest gave the highest percent milled rice but was not significantly different from the second. The fourth harvest date showed a slightly lower percent milled rice than the second and third but was significant only under solar drying. There were some differential effects of method of drying on variety (table 3 and fig. 11). These are, however, not significant primarily due to the large variation in the number of observations for each variety.

The analysis of variance summarized in table 4 and fig. 12 indicated significant effects of harvest dates, drying methods, the harvest date x drying method interaction, as well as drying method x variety interaction. For all cases, higher percent head rice was observed for mechanical drying when contrasted to solar drying. The difference is more pronounced at the first harvest date. Some significant differential effects due to varieties were also observed; the largest difference was observed with IR253 when compared

to other varieties. IR253 is a chalky variety susceptible to fracture during the milling process.

In summary, we can say that solar drying increased percent milled rice but decreased head rice yields when compared to mechanical drying, the observations being more clearly defined at early harvest dates. IR253 showed a slightly higher sensitivity to the drying method employed when comparisons of percent head rice recoveries were made with other varieties.

II. Wet season

Examination of table 5 and fig. 13 indicates that both percent milled rice and percent head rice were higher on irrigated farms when contrasted to rainfed farms, with an average increase of 4 percent for head rice and 1.9 percent for milled rice. The difference observed was significant in all cases except for percent head rice at the time of the second harvest.

The first harvest gave the lowest percent head rice as well as the lowest percent milled rice in both irrigated and rainfed areas. Between the second and third harvests, the second gave higher percent head rice (but significant only under rainfed conditions) and similar percent milled rice.

There was a highly significant effect of harvest dates on grain yield in the dry season but not in the wet season (table 6). In the dry season, the yield of the second harvest was highest (3.9 t/ha) followed by that of the first harvest (3.65 t/ha). The lowest yield was obtained from the third and fourth harvests (3.37 t/ha). Between the two seasons, yield levels were higher during the dry season as contrasted to the wet season (a mean yield of 3.57 t/ha vs 2.9 t/ha).

Examination of table 7 indicates that harvest dates significantly affected the percent field loss during both seasons. In both cases, percent field loss was lowest during the first harvest and increased at later harvest dates. The highest field loss was observed for IR253 (fig. 13).

III. Relationship with moisture content

There exists a quadratic relationship between percent head rice recovery and percent moisture content at time of harvest (fig. 14). This relationship indicates that head rice recoveries are low at low moisture content and increase gradually as moisture content increases. Maximum head rice recovery is obtained at a moisture content of about 20 percent and decreases with further increase in moisture content.

Within the range of 13 to 26 percent moisture content at harvest, the percent field losses tended to decrease with an increase in moisture. This observation holds for both the dry and wet seasons (fig. 15).

Alternative solar drying methods

This research project has the following objectives: (1) to evaluate the economic efficiency of solar drying methods suitable for use by small rice farmers; (2) to determine which of a range of alternative solar drying methods will produce the highest milling qualities (maximum head and milled rice yields); and (3) to assess the relative technical efficiency of each method (rate of moisture reduction).

A preliminary experiment was conducted at IRRI farm to determine the optimum sample size to use in the trials. This replicated experiment was conducted on a concrete surface using freshly harvested IR26 with a uniform moisture content of 22.0 percent wet basis. Three grain depths of 1 cm, 3 cm and 5 cm were tested, each with sample drying areas of 1 sq m, 0.75 sq m, 0.5 sq m, and 0.25 sq m. Following drying to 14 percent moisture, each set of samples was subjected to milling recovery tests.

By evaluating relative rates of moisture reduction and the total and head rice recoveries from each treatment, the following conclusions were reached: (1) Sample size should be no less than 1 sq m; (2) The 10-cm border of each sample should be discarded to eliminate boundary effects caused by air circulation and variable grain depth at the edges of the sample; and (3) Grain depth should be maintained at 3 cm to ensure reasonably uniform reduction in moisture throughout the grain profile (avoids moisture stratification). The last recommendation also economizes on the quantity of grain needed to undertake the experiment.

Based on the results of the preliminary trial, a comprehensive experiment is to be conducted at both the IRRI farm and a site to be selected in Vietnam. This experiment will be comprised of seven surface materials using two rice varieties: (1) concrete, (2) polyethylene sheet (clear), (3) polyethylene sheet (black), (4) mats (nipa/palm leaves), (5) nylon sack, (6) beaten/hardened-earth floor, (7) asphalt (if available).

Data will be recorded on the rate of moisture reduction, the total and head yield recoveries obtained from each treatment, and the prevailing relative humidity, temperature, and solar radiation at each site.

Economic evaluation of alternative systems of land preparation

During the past two decades varietal research has significantly increased crop yields under both irrigated and dryland farming conditions. Similar attention has been given to crop response to fertilizers, weed control, insect and disease control, and water management.

Unfortunately, significantly less research has been conducted to measure the effects of tillage practices on yields and farm incomes, particularly in the developing countries. Most studies dealing with tillage compare only the costs of performing a particular task using alternative techniques. Little or no attention has been given to the possible yield effects of various tillage techniques employed under a range of environmental

conditions. Additionally, in most studies of this type attention is focused only on discrete tillage packages, usually identified with a particular power source. In practice, however, farmers use various combinations of tillage equipment involving both traditional and improved techniques.

The purpose of the present study is to determine whether different land preparation techniques or combinations of techniques significantly affect crop yield and other measurable phenomena such as soil compaction and weed growth. Replicated field experiments were laid out at four locations to allow comparison of various physical environments and a range of soil types. The results from one site are complete and are presented in the following discussion. Information from the remaining three sites is being analyzed and will be presented in a later report.

Technological alternatives

A survey was conducted in the area prior to the experiment to determine the most common traditional equipment combinations used for land preparation. This information was used to select the five alternative equipment combinations for land preparation and three levels of weed control employed in the study. These are detailed below:

T_1 = rotavate once using large tractor and harrow three times with carabao
T_2 = rotavate once using large power tiller and harrow three times with carabao
T_3 = plow once and harrow three times using small power tiller
T_4 = plow once using carabao and harrow three times with small power tiller
T_5 = plow once and harrow three times using carabao

The three levels of weed control are:

W_1 = manual weeding at 30 days after transplanting
W_2 = chemical weed control (pre-emergence herbicide applied at four days after transplanting)
W_3 = control (no weeding)

Materials and methods

A modified split-plot design with two replications was employed. Land preparation treatments were assigned to the main plots and weeding techniques on subplots.

A rotary tiller was used for primary tillage with both the large tractor (65 hp) and the large power tiller (10-15 hp). Moldboard plows were used with the carabao and small power tiller (5-7 hp). Harrowing on all plots was performed using a comb harrow. The intensity and timing of harrowing following basic tillage was standardized for all methods. An interval of one week elapsed between primary tillage and the first harrowing

and between the first and second harrowings. This permitted germination of some weeds following primary tillage which were subsequently destroyed during the harrowing operations. Final harrowing was performed one day before transplanting. Each harrowing consisted of two passes over the paddy.

Raising seedlings, transplanting, and subsequent crop care were under the supervision of the farmer. He was encouraged, however, to standardize each operation over all plots.

Transplanting using IR20, an early-maturing variety of about 120 days duration, took place the first week of July. A single top dressing of 60 kg/ha N was applied after three weeks to all treatments.

Weed counts were taken at 30 days after transplanting to compare weed growth among land preparation treatments. At the grass heading stage, weed samples from two 20 x 50 cm quadrants were taken to provide a comparison of weed survival among weeding treatments within each land preparation treatment. Grain yield data is based on 6-sq m cuttings reduced to 14 percent moisture content.

Results

Land preparation. The field performance rates for alternative techniques are shown in table 8. These figures are based upon the net time spent for each task with losses due to delays such as lunch breaks, rests, and breakdowns, being deducted from the total. To calculate the total manhour requirements necessary for each tillage treatment would require that these losses be added to the figures shown in the table.

The initial soil depth shown in table 8 was taken prior to primary tillage and the terminal depth immediately after final harrowing. The depth at 35 psi pressure increased by about 7 cm for all treatments. At 70 psi pressure, however, the increase is less -- only about 3 cm. But what is of greater significance, however, is the substantial increase in soil depth using 70 psi pressure in the large-tractor tilled plots. This indicates slight degratation in the hardpan when using large tractors for the primary tillage operation.

The manpower requirements contained in table 8 also demonstrate a capacity advantage of technology level T_3 (small power tiller) over other combinations. Where timeliness is an important consideration, this method embodies somewhat more flexibility and efficiency than other techniques. A large tractor-small power tiller combination might reduce the time requirement by 35 percent as compared with method T_3 but it is unlikely that this equipment combination would be used.

Table 9 indicates that the rotavated plots (T_1 and T_2) were somewhat better prepared than those which were plowed. Weed growth following transplanting, as measured by the number of weeds per unit area, is somewhat lower for these two treatments. The effect of differences in weed density among treatments on yields is demonstrated in a later section.

Weed weight and grain yield. The analysis of variance for weed weight and grain yield shown in table 10 indicates no significant differences in yields and weed weights among land preparation treatments. Significant differences in yield and weed weight, however, occur between the control and treated plots within land preparation techniques. These are shown more clearly in tables 11 and 12. The low efficiency of the herbicide application stems principally from the adverse weather conditions prevailig at the time of application.

The yield figures tend to support the hypothesis that mechanization *per se* does not increase yields. The yield means not only exhibit non-significant differences but also exhibit a very minimal variation among means -- at most 0.2 of a ton. Table 11 also shows that differences in mean yields of different weed control measures, while statistically significant, are quantitatively very small. A plausible explanation for this is the type of weed regime encountered in the area. Throughout the experimental plots the weed population was predominantly sedge of the species *Cyperus iria* (L.) Vahl. Research has shown that yields are insignificantly affected by competition from sedge and broadleaf weeds. Significantly lower mean yields usually result from competition with mixtures containing grasses, sedges, and broadleaves or with grasses alone.[1/]

Economic aspects. From the early data generated by the experiment, it appears that similar yields can be expected from the different land preparation methods employed. A series of benefit-cost ratios for the alternative systems were calculated (table 13).

Land preparation costs were determined using the current contract rates in the area and the actual capacity figures contained in table 8. The cost of weeding is based on a ₱6 daily wage for time spent in the handweeded plots. A charge of ₱35 for chemicals plus ₱5 for application is used in pricing herbicide treatments.

Examination of table 13 seems to indicate weed control under conditions encountered in this experiment is not necessary. In fact, no weeding results in higher benefits. The benefits derived from no weeding are more than twice those of handweeding and about 20 percent more than the chemical method of control. This is a highly location-specific conclusion, however, and caution should be exercised in interpreting the results. More definitive conclusions will be available when the results of experiments conducted at other locations become available. A second important conclusion concerns the choice of technology for land preparation. Under the current price structure the use of carabaos for plowing and that of the small tiller for harrowing is the optimum method. The economic advantage of this particular equipment combination over methods T_3 and T_5 is, however, very slight.

[1/]See, for example, International Rice Research Institute. 1968. Annual Report. Los Baños, Laguna, Philippines.

A complete summary of data from all sites will be presented in the next progress report. Included will be the results of a soils analysis taken from samples gathered from each of the four locations and a cost comparison between locations to determine the sensitivity of technique selection to changes in the physical environment.

Technical and economic characteristics of the Philippine rice processing industry

The study involves a three-phase field survey of the rice processing industry to determine the technical and economic factors which influence the selection of small- and medium-scale rice milling and processing facilities.

The first phase consists of a mill-level survey to determine the financial and economic elements involved in mill ownership and operation. The second phase (conducted concurrently with the first) involves an analysis of farmers' attitudes and preferences for alternative milling and processing technologies. The final phase will consist of sample milling at a limited sub-sample of the mills included in the first phase of the study.

Current status of the study

During the first four months of the current reporting period, the sample of rice mills was drawn, questionnaires were completed and survey personnel were recruited and trained. Stratified systematic sampling with provision for replacement was used to select representative sample mills. The mills were stratified according to type (steel huller or disc sheller) and rated milling capacity per 12-hour operation. Cono mills were stratified over three output levels: (a) 4.5 t/day and below; (2) 5-8.5 t/day; (c) 9 t/day and above. Engleberg mills (steel hullers) were also segregated by size into the following categories: (a) 2 t/day and below; (2) 3-4 t/day; (c) 4 t/day and above. For the farm-level survey, a minimum of three farmers from the locality near each sample mill are being taken. Both the mill and farm level surveys are being conducted at three regional locations within the Philippines -- Central Luzon, Southern Tagalog and Camarines Sur. The study will include approximately 180 rice mills and 540 rice farmers.

The questionnaires being used in the field survey have been pre-tested in both Central Luzon and Southern Tagalog. They have also been pre-coded to facilitate computer processing of data as the survey progresses.

Work on the initial two phases of the survey commenced the second week of November. To date, approximately 60 rice mills and 200 rice farmers have been interviewed in the Central Luzon and Southern Tagalog regions.

Mobility and the timing of the survey have been impaired by a shortage of fuel. We have also noted in several instances that the rice shortage which occurred in mid-1973 resulted in the closing of a number of sample mills, requiring replacement selection in the course of the survey.

Field survey activities are programmed for completion during the first quarter of 1974.

Small- and medium-scale industry study

With the assistance of the Philippine government's Metals Industry Research and Development Center (MIRDC) and the Technology and Development Institute of the East-West Center at the University of Hawaii, the field survey phase of this study neared completion during the current reporting period. Personal interviews with approximately 220 firms were conducted during this time. One hundred twenty respondents were from the Greater Manila area while the remaining 100 were located in 10 regional centers throughout the Philippines. About 30 firms remain to be interviewed. Preliminary editing of questionnaires and coding of data has been undertaken by the MIRDC.

All firms surveyed were involved in the production or fabrication of metal products. The size of individual plants ranged from approximately five to over 800 employees with the majority falling in the 20-50 employee size category. Preliminary examination of the data indicates a wide degree of diversity in the levels of capital and labor utilized in the production of comparable products. There appears to exist considerable variation in the range of capacity utilization as measured by the difference between potential and actual output.

The next phase of the study will be a systematic analysis of the data to develop a series of industry profiles by firm location, size, product, and degree of integration. We will perform a specific analysis on the data to assess the performance and techno-economic characteristics of firms producing agricultural equipment.

SUBCONTRACT DEVELOPMENT AND EXTENSION ACTIVITIES

Ten subcontractors are evaluating IRRI-designed machines in the following countries: India, Indonesia, Korea, Malaysia, Pakistan, Philippines, Sri Lanka, Taiwan, Thailand, and Vietnam. The subcontractors and addresses are listed on page 28 of semiannual report No. 16. With the exception of Malaysia and Pakistan, all subcontractors were visited at least once during this reporting period by a member of the IRRI Agricultural Engineering Dept.

During the reporting period, a two-man USAID project review team, along with a member of the IRRI Agricultural Engineering Dept. staff, spent 22 days in the Philippines, Vietnam, Thailand and Korea reviewing the agricultural mechanization situation and the IRRI subcontract program in these countries. The review team presented its findings on September 17, 1973 in Washington, D.C. at a seminar on Agricultural Equipment Development Research for Tropical Rice Cultivation, Contract AID/csd-2541.

Selected IRRI designs are being evaluated by each subcontractor, but only in the Philippines is there volume production by manufacturers of some IRRI designs -- primarily the single-axle tractor, grain dryer, paddy seeder, and axial flow thresher.

In Korea, the burner and fan unit of the IRRI dryer are being adapted for local manufacture. In Sri Lanka, the government is encouraging agencies and manufacturers to design and manufacture tillers within the country. Three government agencies and one private manufacturer (the IRRI subcontractor) have produced prototypes. Three of the four have used the IRRI design.

Engineering drawings for IRRI machines are sent to the subcontractors. For example, drawings for the axial flow thresher have been sent to the subcontractors although no machines have been shipped as yet from the Philippines. The subcontractors can then use the drawings to study the details and to show to manufacturers. It is anticipated that in certain situations the axial flow thresher for the subcontractors' evaluation will be fabricated in-country from drawings rather than shipped from the Philippines. By so doing, the subcontractor will receive a machine earlier than delivery by sea and a local manufacturer will have the opportunity to build one prototype.

In most cases, subcontractors are conducting a satisfactory program to evaluate the performance of IRRI machines; however, assessment of the cost, sales and manufacturing characteristics of each design have not been undertaken by many of the subcontractors.

The following table lists the machines sent to subcontractors outside the Philippines. The drum thresher and table threshers are no longer being evaluated since subcontractor work revealed insufficient return on investment for these machines.

MACHINES SENT TO SUBCONTRACTORS OUTSIDE OF THE PHILIPPINES

Country	Drum thresher	Table thresher	Single hopper seeder	Multi-hopper seeder	Grain cleaner	5-7 hp tiller	Bellows pump	Batch dryer	Rice hull furnace
India	2	2	3	-	2	2	2	-	-
Indonesia	-	2	2	2	2	2	2	8*	-
Korea	-	2	3	2	2	2	2	3	-
Malaysia	-	2	2	2	2	2	2	1	1
Pakistan	-	2	3	2	2	2	2	-	-
Sri Lanka	1	2	3	-	2	3	2	1	-
Taiwan	1	2	2	2	2	2	2	1	1
Thailand	1	2	5	-	2	3	-	-	-
S. Vietnam	-	-	2	2	1	3	2	2	1

*Not purchased under IRRI-AID farm machinery contract.

WORK PLAN

JANUARY 1 TO DECEMBER 31, 1974

MACHINERY DESIGN AND DEVELOPMENT

5-7 hp single-axle tiller

Design refinements required to improve field performance and/or reduce cost of manufacturing will be made as required. Upon satisfactory testing, design improvements will be released to the manufacturers.

8-14 hp tiller

Based upon field tests of the first prototype, a second prototype of improved design will be completed and the unit field-tested. The goal is to release a tested design during 1974.

Effect of power source and tillage method on a compacted soil layer

The field study will continue. The purpose is to determine the degree to which large tractors, large tillers, small tillers, and carabao deepen the compacted soil layer in an irrigated, continuous rice production system.

Paddy seeder

Primary efforts will be made to determine if a modification of the paddy seeder will be satisfactory for upland paddy seeding.

Single-row upland seeder

With increased interest in multiple cropping, there is a demand for a seeder which is low-cost but can be employed for a wide range of crops. Work will be continued on the development of such a unit which can be used either as a manual-powered, single-row unit or several units hitched together by a hand tractor or animal.

Herbicide applicator

Two units incorporating improvements based on past testing will be ready for field testing during February 1974. An effort will be made to successfully complete this design and release it for production in 1974.

Fertilizer and/or insecticide applicator

Investigations at IRRI have shown that by applying insecticide in the root zone, the effectiveness of the insecticide is enhanced and a smaller quantity is required. Likewise, if fertilizer can be applied approximately

10 cm below the surface, less fertilizer, particularly nitrogen, needs to be applied. A unit will be developed which can be used by Asian farmers to apply fertilizer and/or insecticide. Dry powder and slurries will be primarily considered, although application of fertilizer and/or insecticide in pellet form will be evaluated. This work will be conducted in close cooperation with the departments of Entomology and Agronomy.

Axial flow thresher

Advice will continue to be given to the manufacturers now going into production in the Philippines. Design refinements to imrpove performance and reduce costs will be made in the rotary separator as well as other applicable areas of the machine.

PTO thresher

Additional modifications and testing will be made to improve output quality. Upon obtaining satisfactory performance, the design will be evaluated for manufacturing cost and sales potential. Some machines will then be purchased from local manufacturers so that the manufacturer can obtain the experience of building several machines and IRRI will have machines to carry out an expanded evaluation program.

Stripper harvester

The third prototype with the six-row head will be ready for field testing by the end of the first quarter. Field testing of this unit will be conducted during the remainder of 1974.

Grain cleaner

The grain cleaner will be evaluated for performance in view of its cost under current conditions in the world. If returns on investment for this machine are not adequate, some thought must be given to major modifications or redesign for the grain cleaner.

Batch dryer

No changes are anticipated in the design of the batch dryer system -- kerosene burner, rice hull furnace, fan, and bin. Assistance will be provided to manufacturers who desire to make modifications to better fit their manufacturing facilities or reduce cost.

Heated-sand dryer

The present unit will undergo continued testing and evaluation. Upon establishment of final design criteria such as throughput, fuel type, and type of user, several units will be fabricated and shipped to those countries where parboiling is a common practice for test and evaluation.

Rice milling

Work will continue on the Engleberg mill to increase its performance through modifications that can be added as repair parts or components at minimal cost. Development of a low-cost centrifugal huller will be continued. The objectives of this development are to produce a design that can be locally fabricated and that can produce a high-quality end-product.

Moisture meter

Upon successful calibration and testing of the experimental electric moisture meter, several units will be fabricated for field testing. It is anticipated that this unit will be released by the end of 1974.

Bellows pump

Work will continue on finding means to increase the life of the bellows without an increase in cost. Upon obtaining a satisfactory solution and tests in the field, drawings will be released to manufacturers of the bellows pump.

Commercial machinery evaluation

Machines of local design and manufacture are available but often receive limited market acceptance. Evaluation of the performance of such machines will continue to be made and suggestions for performance improvement and cost reduction will be provided to the manufacturers. Analyses of these studies will be used in establishing the performance characteristics and design specifications for new machines and to improve current designs.

ECONOMICS OF MECHANIZATION

Grain loss study

The statistical analysis of data gathered during the 1972 wet and 1973 dry seasons will be completed during the first half of 1974. The results of this analysis is to be combined with an additional set of information gathered to determine the losses which occur in handling, transport and storage to provide a complete range of loss characteristics in each post-harvest operation up to milling. Concurrently with the statistical analysis, an economic assessment of the monetary losses will be undertaken to assess the potential return on improved techniques at each stage in the post-harvest phase.

Solar drying trials

A small experiment is being undertaken to determine the comparative efficiency and costs of seven alternative methods of solar drying. The experiment is to be completed during the first quarter of 1974, and the results will be compiled and reported during the first half of the year. The

sampling methodology has now been tested and finalized and the main experiment will be implemented within the first month of 1974.

Alternative systems of land preparation

Work on this replicated trial was initiated in 1973. The objective has been to assess the costs, efficiency and impact on yield of five alternative systems of land preparation used in lowland and rainfed rice. Four locations in farmers' fields representing four soil conditions have been utilized for the trials. The data from the experiment has now been assembled and the statistical analysis will be completed during the first half of 1974.

Economics of processing systems

Field survey of work on the first two phases of a three-phase field survey of the rice processing industry will be completed during the first quarter of 1974. The first phase has been a careful survey of the economic and technical conditions facing 180 rice mills in three regional locations in the Philippines. The second phase of this study has been a farm-level analysis of those conditions affecting the demand for milling services. This has included a careful assessment of the marketable surplus sold for commercial purposes, the subsistence demand for milled rice, the value and size of on-farm storage facilities, and a complete listing of practices utilized by farmers for harvest and post-harvest operations. The third phase of this study will be a detailed engineering appraisal of a small sample of rice mills. All field work is to be completed during the first half of 1974 and a summary of the results completed during the third quarter of the year.

Small- and medium-scale metal industry study

Field survey work commenced during the second half of 1973 and will be completed during the first quarter of 1974. The objectives of the survey have been to determine the constraints and technological capabilities of small- and medium-scale firms producing farm equipment or related products in both metropolitan and provincial locations. The survey includes approximately 200 firms stratified on the basis of size and regional location.

Rice production systems analysis

Work on the development of a comprehensive programming model will be continued during the coming year. This exercise is an attempt to evaluate the impact of alternative systems and techniques of mechanization on labor utilization, farm income, resource productivity and output under a wide range of environmental and economic conditions.

Labor utilization study

Using data already available, a study will be undertaken to determine the direct and indirect impact of mechanization on total labor utilization and employment. This will be an attempt to measure both the effects at the farm level and the secondary effects in the manufacturing, marketing and service sector which produces and sells farm equipment.

Regional mechanization study

This study will be an attempt to gather and present information describing the present level and pattern of mechanization in ten countries throughout the Asian region. It will include an analysis of the factors which have affected the use of mechanization in the area and the impact of these programs on the adoption of particular strategies.

PERSONNEL LIST

Personnel and their respective man-months engaged on the project during the past six months, July 1 to December 31, 1973, and projected requirements, January 1 to June 30, 1974:

Position	Name	Fr: 7- 1-73 To: 12-31-73	Fr: 1- 1-74 To: 6-30-74
Development Engineer & Project Leader	A. U. Khan[a/]	-	-
Agricultural Economist	B. Duff	6	6
Evaluation Engineer	F. Nichols	6	6
Associate Agricultural Engineer	J. Campbell[b/]	5	6
Asst. Design Engineer (Design)	J. Policarpio	2.5	0
Asst. Design Engineer (Processing)	A. Manalo	6	6
Senior Research Assistant (Design)	J. Arboleda	6	6
Senior Research Assistant (Design)	N. Navasero	6	6
Senior Research Assistant (Test & Evaluation)	C. Padolina	6	6
Research Assistant (Economics)	N. Orcino	6	6
Research Assistant (Economics)	Z. Toquero	6	6
Research Assistant (Test & Eval.)	S. Gutierrez	2	6
Research Assistant (Design)	G. Espiritu	1.5	6
Research Aide (Test & Evaluation)	B. Ramos	6	6
Research Aide (Economics)	B. Samson	6	6
Research Aide (Economics)	L. Lumang	5.5	2
Draftsman	F. Cabrales	6	6
Draftsman	B. Buan	6	6
Secretary	E. Manalo	6	6
Secretary	C. Jizmundo	6	6
Shop Foreman	S. Gutierrez	4	0
Shop Foreman	E. Dungo	2	6
Machinist	Z. Borja	6	6
Machinist	A. Dizon	6	6
Tinsmith	R. Santos	6	6
Tinsmith	E. Dungo	4	0
Welder	A. Barot	6	6
Shop Mechanic	A. Macatangay	6	6
Shop Mechanic	R. Dignadice	6	6
Shop Mechanic	P. de Mesa	6	6
Laborer (Shop helper)	M. Castro	6	6
Laborer (Shop helper)	E. Macatangay	6	6
Laborer (Student assistant)	L. Lumang	0.5	0

a/Three-fourths time charged to the Contract. On one-year study leave.

b/Visiting extension engineer.

Table 1. Use of contact applicator with some herbicides for upland rice, IRRI, 1973 wet season.

No.	Herbicide	Rate[a/] Kg a.i./ha	Weed control[b/] 14 DT*	30 DT	Toxicity[c/] 30 DT
1	MCPA	0.3	1.5	1.2	0
2	MCPA	0.5	2.2	1.0	0
3	MCPA	1.0	2.5	1.8	0.5
4	MCPA	1.5	2.5	1.5	1
5	MCPA	2.0	2.5	2.0	1
6	2,4,D	0.3	2.5	0.2	0
7	2,4,D	0.5	2.5	1.8	0.5
8	2,4,D	1.0	2.5	2.2	1
9	2,4,D	1.5	2.5	2.8	1
10	2,4,D	2.0	2.5	2.0	1
11	MON 2139	0.5	2.2	1.8	0
12	MON 2139	1.0	3.0	0.5	0
13	MON 2139	1.5	4.0	2.5	0
14	MON 2139	2.0	3.8	2.0	0
15	MON 2139	2.5	4.2	2.2	0
16	PARAQUAT	0.5	1.5	0.2	0
17	PARAQUAT	1.0	2.2	1.0	0
18	PARAQUAT	2.0	2.5	1.0	0
19	PARAQUAT	3.0	3.8	1.5	0
20	PARAQUAT	4.0	3.5	1.5	0
21	Untreated control		0.5	0	0
22	Untreated control		0.5	0	0
23	Untreated control		0.5	0	0
24	Untreated control		0.5	0	0
25	Untreated control		0	0	0

a/ a.i. diluted to 150 liters of water per ha.

b/ 0 = no control ; 5 = complete control.

c/ 0 = no toxicity to crop; 5 = complete kill of crop.

*DT - days after treatment.

Table 2. Cost budget of four dryer assemblies.

ITEM	COSTS (Pesos)			
	Metal bin + kerosene burner	Metal bin + rice hull furnace	Wooden bin + rice hull furnace	Wooden bin + kerosene burner
Capital investment[a/]	4210.00	4120.00	2570.00	2660.00
Fixed costs:				
Depreciation[b/]	842.00	904.00	856.67	612.00
Interest[c/]	252.60	246.20	154.20	159.60
Total	1094.60	1150.20	1010.87	771.60
Variable costs/hr				
Gasoline[d/]	0.50	0.50	0.50	0.50
Kerosene/rice hull	1.15	0.28	0.28	1.15
Labor[e/]	1.00	1.00	1.00	1.00
Variable costs/ton[f/]				
30 cm depth	12.78	7.94	6.50	10.48
45 cm depth	10.18	6.04	5.28	8.91

a/ Metal bin - P2150
Blower assembly - P820
Burner assembly - P690
Wooden bin - P600
Hull furnace - P600
Gasoline engine driver - P615

b/ Estimated service life:
5 years - metal bin, engine, blower and burner
3 years - wooden bin, hull furnace

c/ 12% on average capital investment

d/ Gasoline @ P0.59/liter
Kerosene @ P0.641/liter
Rice hull @ P0.05/kg for transport and handling

e/ 2 man-hours for loading and unloading/batch + 1.25 man-hours tending dryer.

f/ 10 points of moisture removed at rate of 2 points/hr at 30 cm and 1-1/2 points/hr at 45 cm.

Table 3. Comparison of means[1/] (%) of milled rice over farms by variety, harvest date and drying method, Gapan, Nueva Ecija, 1973 dry season.

	Solar	Mechanical	Difference
IR20 (30 farms)			
First harvest	66.94b	65.75c	1.19**
Second harvest	69.23a	67.36b	1.87**
Third harvest	69.36a	69.00a	0.36^{ns}
Fourth harvest	68.31a	68.54ab	-0.23^{ns}
C4 (8 farms)			
First harvest	68.10a	67.19a	0.91^{ns}
Second harvest	69.69a	68.90a	0.79^{ns}
Third harvest	70.08a	69.08a	1.00^{ns}
Fourth harvest	69.34a	68.90a	0.44^{ns}
IR253 (7 farms)			
First harvest	64.91b	62.93b	1.98**
Second harvest	68.28a	68.51a	-0.23^{ns}
Third harvest	68.29a	68.26a	0.03^{ns}
Fourth harvest	66.94ab	67.04a	-0.10^{ns}
IR24 (5 farms)			
First harvest	68.69a	68.17a	0.52^{ns}
Second harvest	69.62a	68.63a	0.99^{ns}
Third harvest	68.76a	67.55a	1.21^{ns}
Fourth	67.63a	65.94a	1.69^{ns}

[1/] Harvest date means, at each variety and each method, followed by a common letter are not significantly different at the 5% level by DMRT.

Table 4. Comparison of means[1/] (%) of head rice over farms by variety, harvest date and drying method, Gapan, Nueva Ecija, 1973 dry season.

	Solar	Mechanical	Difference
IR20 (30 farms)			
First harvest	41.69ab	45.91a	4.22**
Second harvest	45.90a	48.99a	3.09*
Third harvest	39.55b	41.36b	1.81^{ns}
Fourth harvest	31.67c	32.18c	0.51^{ns}
C4 (8 farms)			
First harvest	48.94a	52.32a	3.38^{ns}
Second harvest	54.41a	56.31a	1.90^{ns}
Third harvest	54.01a	54.99a	0.98^{ns}
Fourth harvest	50.62a	50.69a	0.07^{ns}
IR253 (7 farms)			
First harvest	21.51b	35.62ab	14.11**
Second harvest	36.03a	43.60a	7.57**
Third harvest	30.94a	38.39a	7.45**
Fourth harvest	19.16b	27.42b	8.26**
IR24 (5 farms)			
First harvest	45.97ab	53.59a	7.62*
Second harvest	52.05a	54.99a	2.94^{ns}
Third harvest	47.96a	49.67a	1.71^{ns}
Fourth	35.93b	36.85b	0.92^{ns}

[1/] Harvest date means, at each variety and each method, followed by a common letter are not significantly different at the 5% level by DMRT.

Table 5. Comparison of means[1/] (%) of milled rice of IR20 rice variety by harvest date and irrigation method, Gapan, Nueva Ecija, 1972 wet season.

Harvest Date	Irrigated (62)[2/]	Rainfed (34)	Difference
First	67.58b	65.62b	1.96**
Second	69.62a	67.83a	1.79**
Third	70.17a	68.31a	1.86**

[1/] Harvest date means, at each treatment (Irrigated or Rainfed), followed by a common letter are not significantly different at the 5% level.

[2/] Number in () indicate no. of observations.

Table 6. Comparison of means (t/ha) of rough rice yield of 4 rice varieties by harvest date and season, Gapan, Nueva Ecija, 1972 wet season and 1973 dry season.

Harvest Date	Dry Season	Wet Season
First harvest	3.65	2.88
Second harvest	3.90	2.95
Third harvest	3.42	2.92
Fourth harvest	3.32	-
LSD (.05)	0.18	0.12
(.01)	0.22	0.18

Table 7. Comparison of means (%) of field loss of 4 rice varieties by harvest date and season, Gapan, Nueva Ecija, 1972 wet season 1973 dry season.

Harvest Date	Dry Season	Wet Season
First harvest	1.27	0.40
Second harvest	1.86	0.98
Third harvest	2.32	1.58
Fourth harvest	2.54	-
LSD (.05)	0.36	0.30
(.01)	0.47	0.40

Table 8. Inputs for land preparation, Marilo, Gapan, Nueva Ecija, 1973 wet season.

Item	Land preparation*				
	T1	T2	T3	T4	T5
Area, sq m	1303	1009	1229	1198	1328
Initial soil depth, cm					
35 psi (2.46 kg/sq cm)	11.5	12.5	11.5	12.2	11.2
70 psi (4.92 kg/sq cm)	21.0	24.4	22.4	21.2	19.1
Final soil depth, cm					
35 psi (2.46 kg/sq cm)	17.5	19.2	18.0	19.2	17.5
70 psi (4.92 kg/sq cm)	26.3	24.5	25.2	24.6	21.9
Labor input, hr/ha					
plow	3.5	6.2	12.4	27.1	27.0
harrow	30.3	30.2	12.4	11.3	31.1
Total	33.8	36.4	24.8	38.4	58.1
Fuel consumption, liters/ha	13.4	11.8	31.6	17.0	-

*Average of two replicates.

T1 = large tractor + carabao
T2 = large tiller + carabao
T3 = small tiller only
T4 = carabao + small tiller
T5 = carabao only

Table 9. Weed count at 30 DT[a/], Marilo, Gapan, Nueva Ecija, 1973 wet season.

Treatment	Weed count (number/0.2 sq m)		
	Rep. I	Rep. II	Average
T1	151	68	109.5
T2	171	106	138.5
T3	195	88	141.5
T4	124	192	158.0
T5	206	84	145.0

[a/]DT - days after transplanting.

Table 10.- ANOV for weed weight and grain yield, Marilo, Gapan, Nueva Ecija, 1973 wet season.

SV	Grain yield (t/ha)		Weed weight (g/0.2 m^2)	
	df	MS	df	MS
Replications	1	0.15000	1	615.6807
Land preparation treatments (T)	4	0.102231^{ns}	4	48.8398^{ns}
Error (a)	4	0.565629	4	90.2169
Weeding (W)	2	0.827972^{ns}	2	1891.3955**
Control vs treated	(1)	1.306253*	(1)	1579.0508**
Handweed vs herbicide	(1)	0.349690^{ns}	(1)	2203.7402**
WxT	8	0.372101^{ns}	8	22.2938^{ns}
T x (control vs treated)	(4)	0.450755^{ns}	(4)	37.6689^{ns}
T x (handweed vs herbicide)	(4)	0.293446^{ns}	(4)	6.9158^{ns}
Error (b)	40	0.279147	25	43.3849^{ns}
cv(a)		19.8%		67.2%
cv(b)		13.9%		46.6%

Table 11. Table of means[a], grain yield (t/ha), Marilo, Gapan, Nueva Ecija, 1973 wet season.

Land preparation	Weeding			Land preparation mean
	Hand-weed	Herbi-cide	Con-trol	
T1	3.8	3.8	4.0	3.9a
T2	4.4	3.6	3.4	3.8a
T3	3.6	3.8	3.5	3.7a
T4	4.2	4.2	3.3	3.9a
T5	3.9	3.7	3.6	3.7a
Weeding mean	4.0b	3.8ab	3.6a	

[a] In a row or column, means followed by a common letter are not significantly different at 5% level, using Duncan's multiple range test.

Table 12. Table of means[a], weed weight (g/0.2 m^2), Marilo, Gapan, Nueva Ecija, 1973 wet season.

Land preparation	Weeding			Land preparation mean
	Hand-weed	Herbi-cide	Con-trol	
T1	2.7	20.3	25.0	16.0a
T2	2.2	15.1	18.8	12.1a
T3	3.6	19.4	26.6	16.5a
T4	3.2	17.0	20.4	13.5a
T5	3.8	17.8	16.1	12.6a
Weeding mean	3.1a	17.9b	21.4b	

Table 13. Benefit-cost ratio[a], Marilo, Gapan, Nueva Ecija, 1973 wet season.

Land preparation	Weeding			Land preparation mean
	Hand-weed	Herbi-cide	Con-trol	
T1	6.9	13.2	17.1	12.4
T2	8.0	12.6	14.6	11.8
T3	7.7	18.3	22.6	16.2
T4	9.1	21.2	22.8	17.7
T5	8.3	17.6	22.6	16.1
Weeding mean	8.0	16.6	19.9	

[a] Based on the following assumptions: (1) Price of paddy = ₱35/cavan of 44 kg. (2) Land preparation costs: Large tractor, ₱120/ha; large tiller, ₱120/ha; small tiller, ₱40/day; carabao, ½ cav/day including man. (3) Weeding costs: handweed, ₱250/ha; herbicide, ₱40/ha.

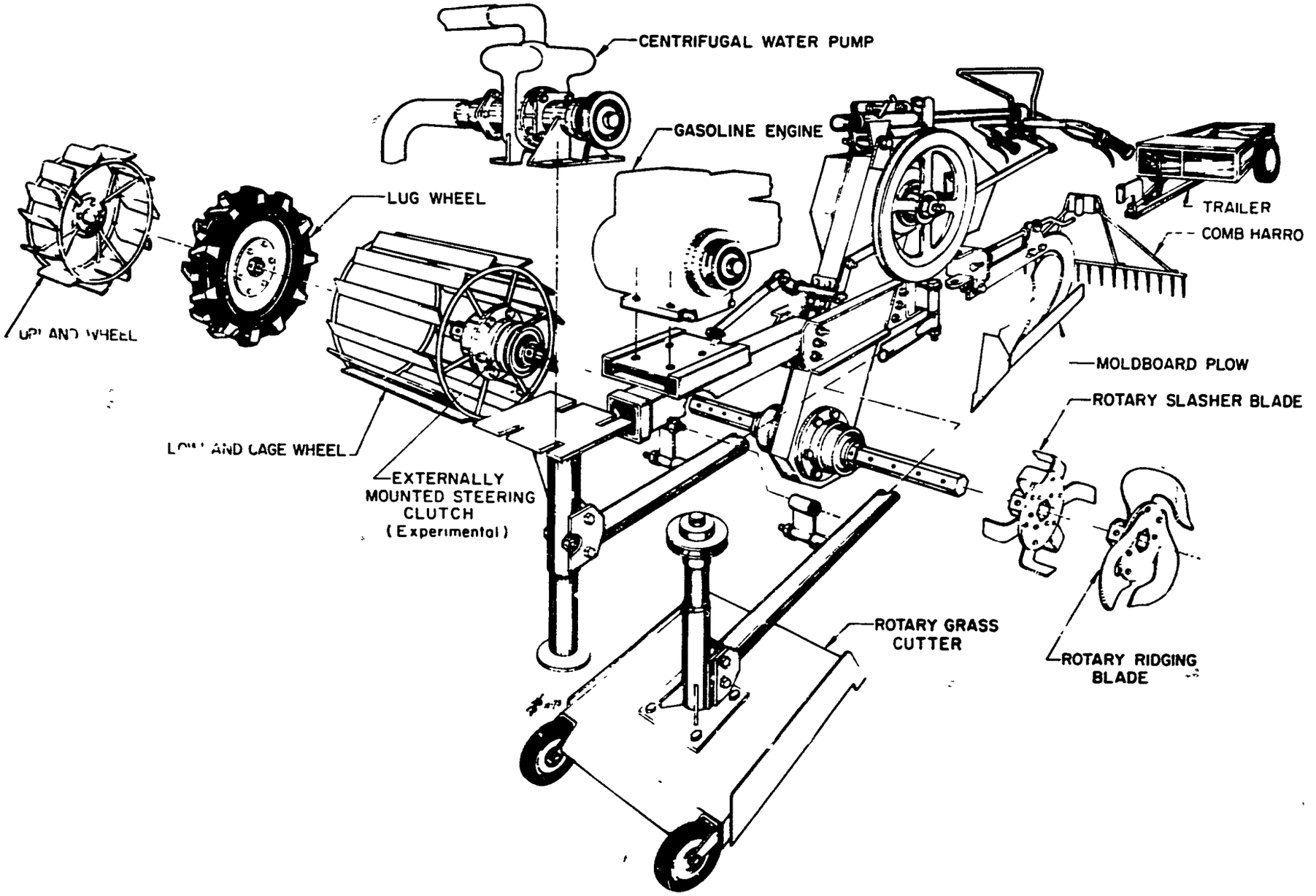

Fig. 1 IRRI 5-7 hp power tiller with standard and optional attachments.

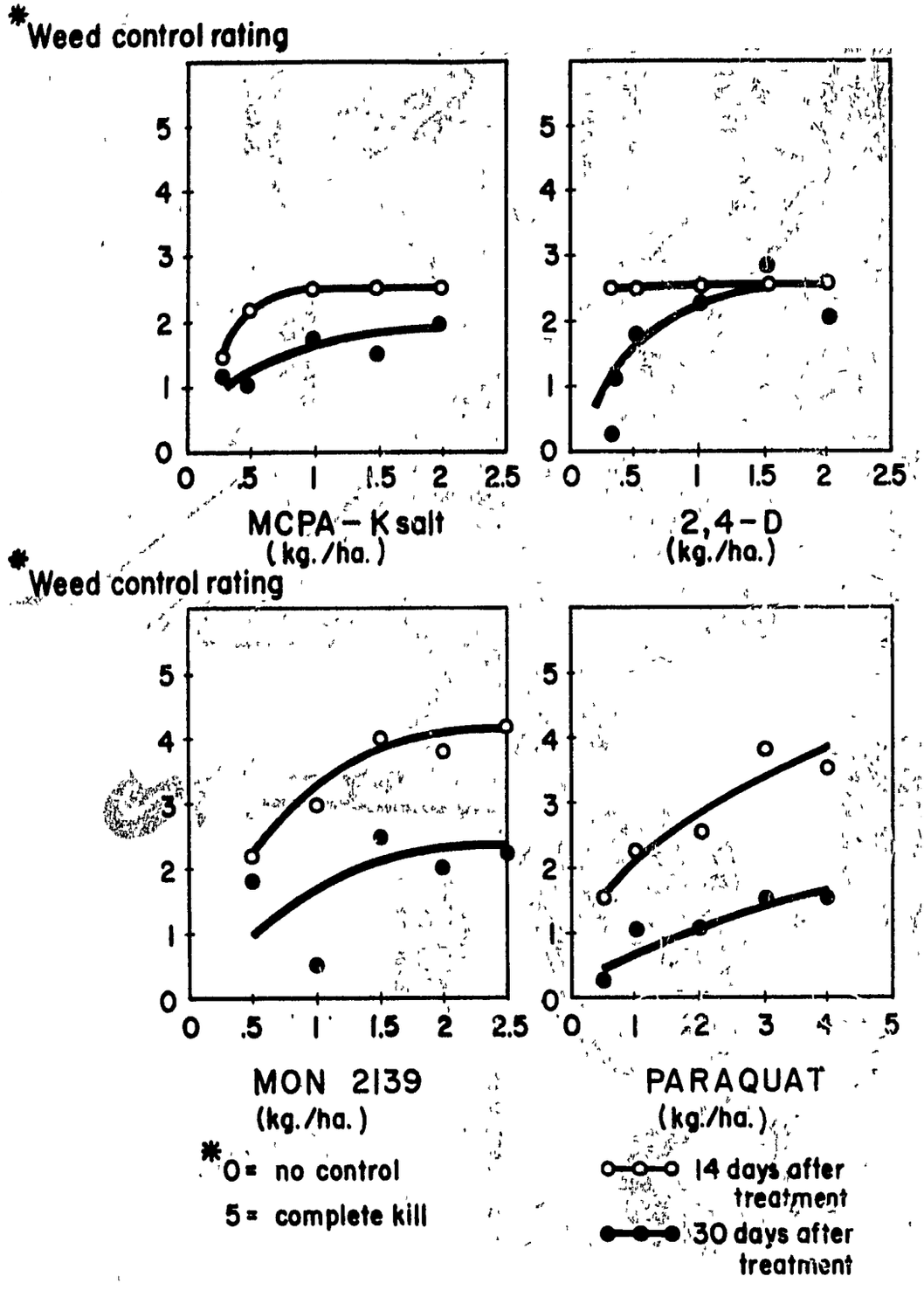

Fig. 2 Weed control rating vs. application rate for contact applicator.

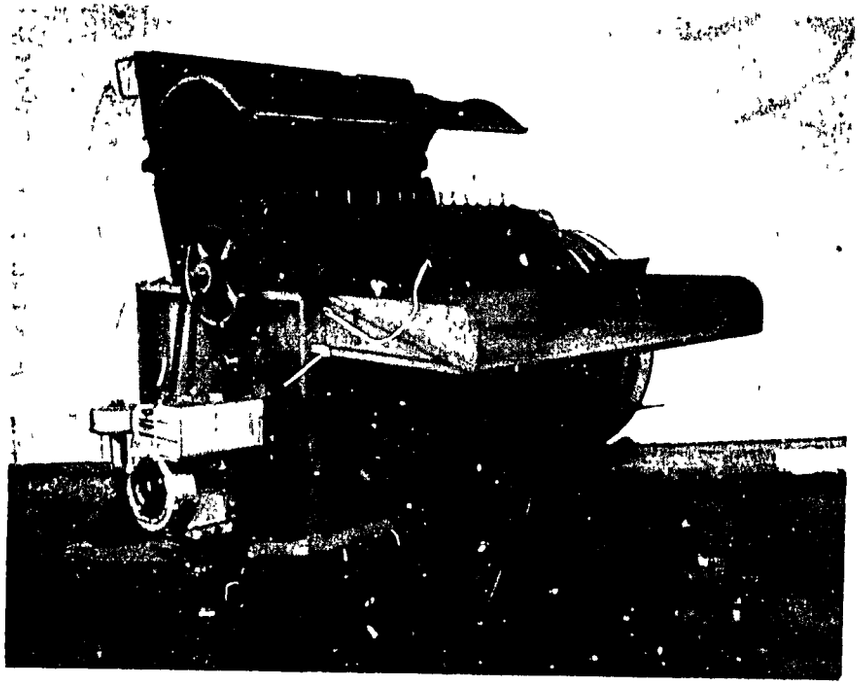

Fig. 3 Axial flow thresher with cover and upper concave in open position.

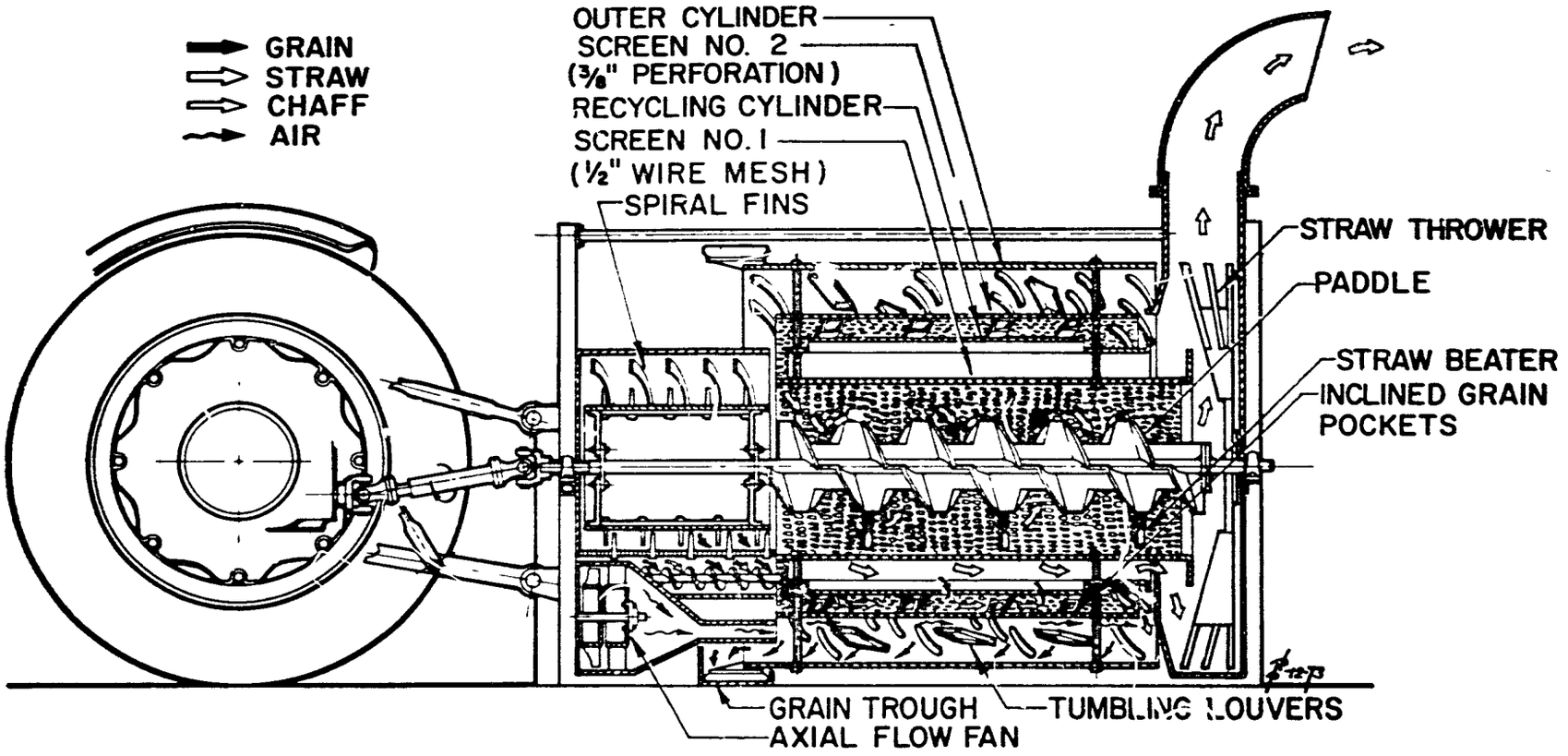

Fig. 4 Sectional view of PTO thresher showing tumbling louvers.

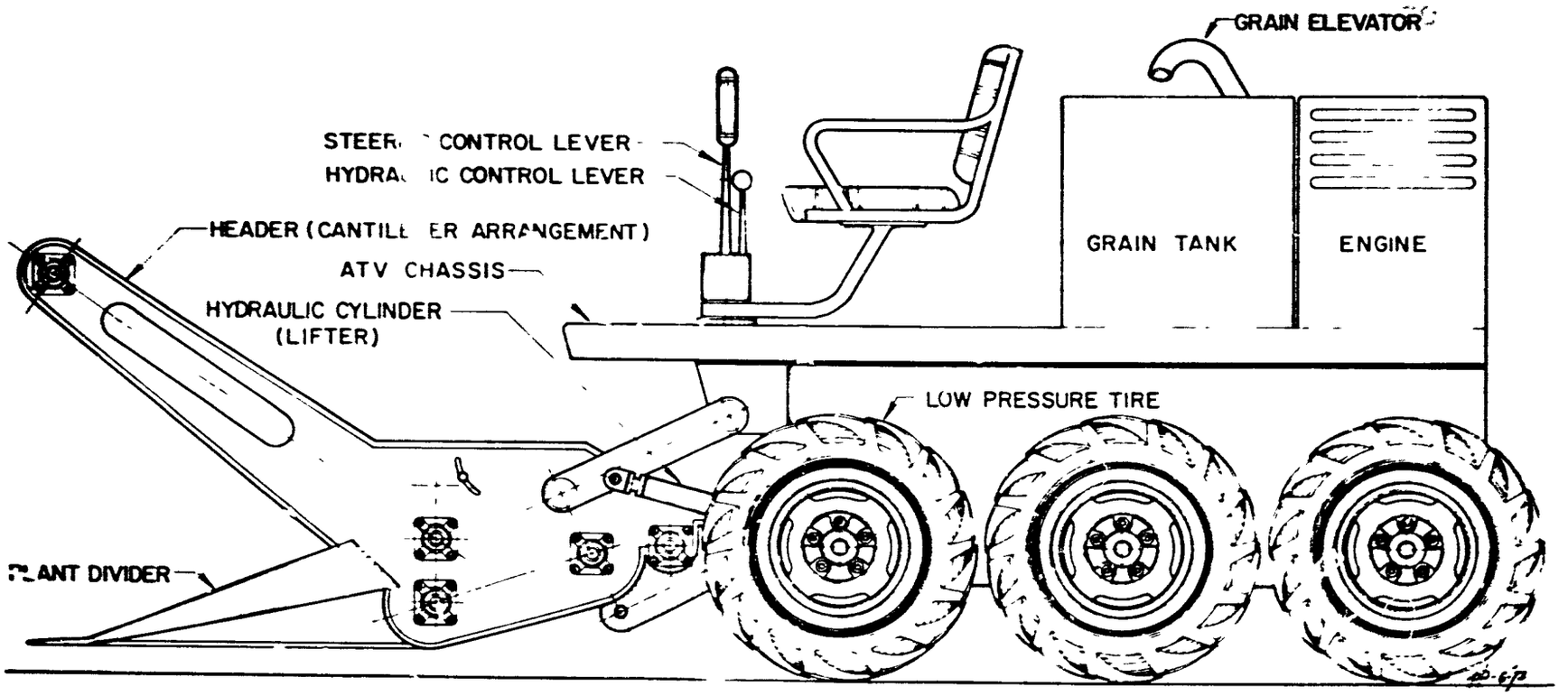

Fig. 5 Side view of 6-row paddy stripper harvester.

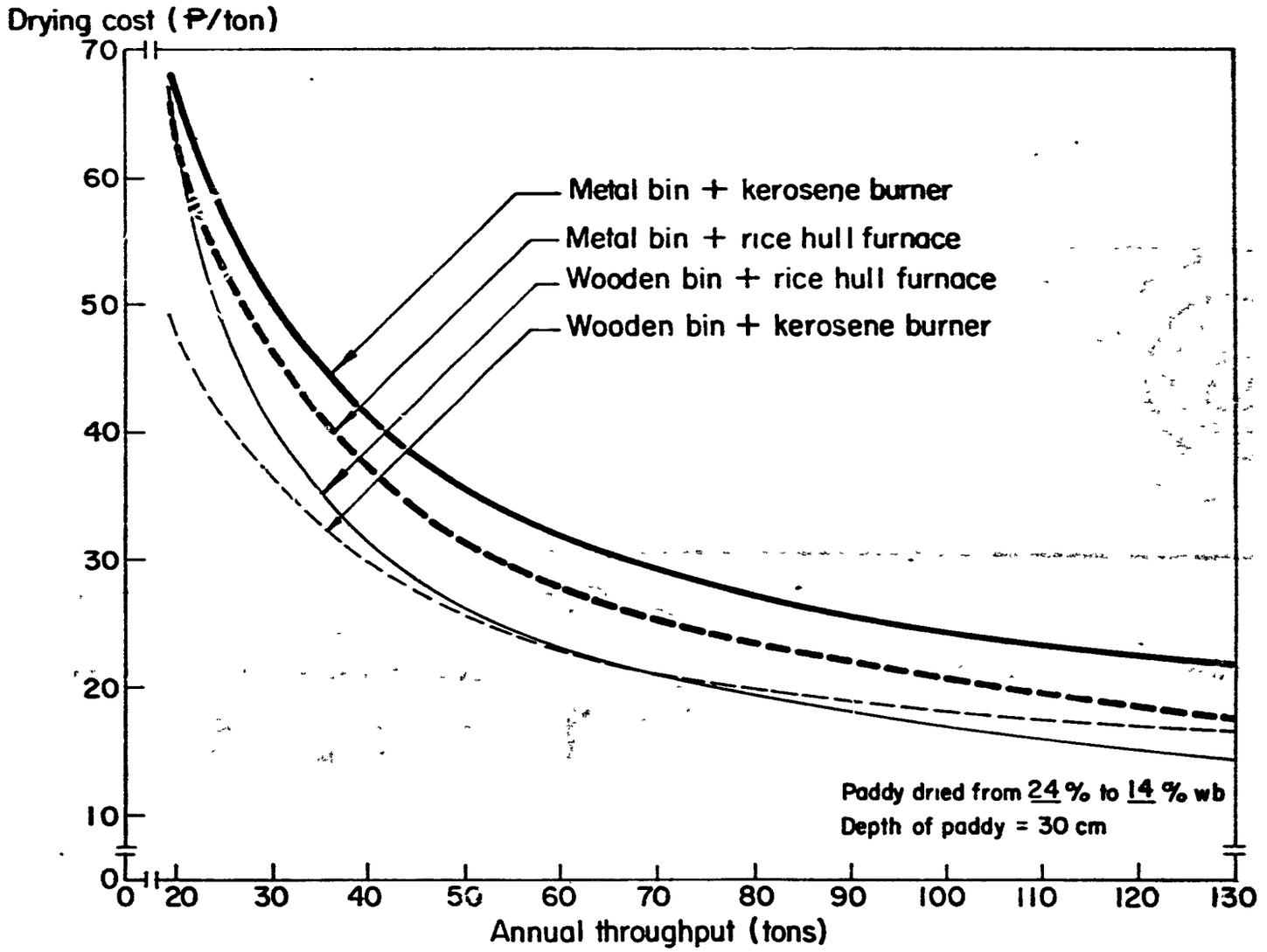

Fig.6 Average cost vs throughput for four dryer assemblies.

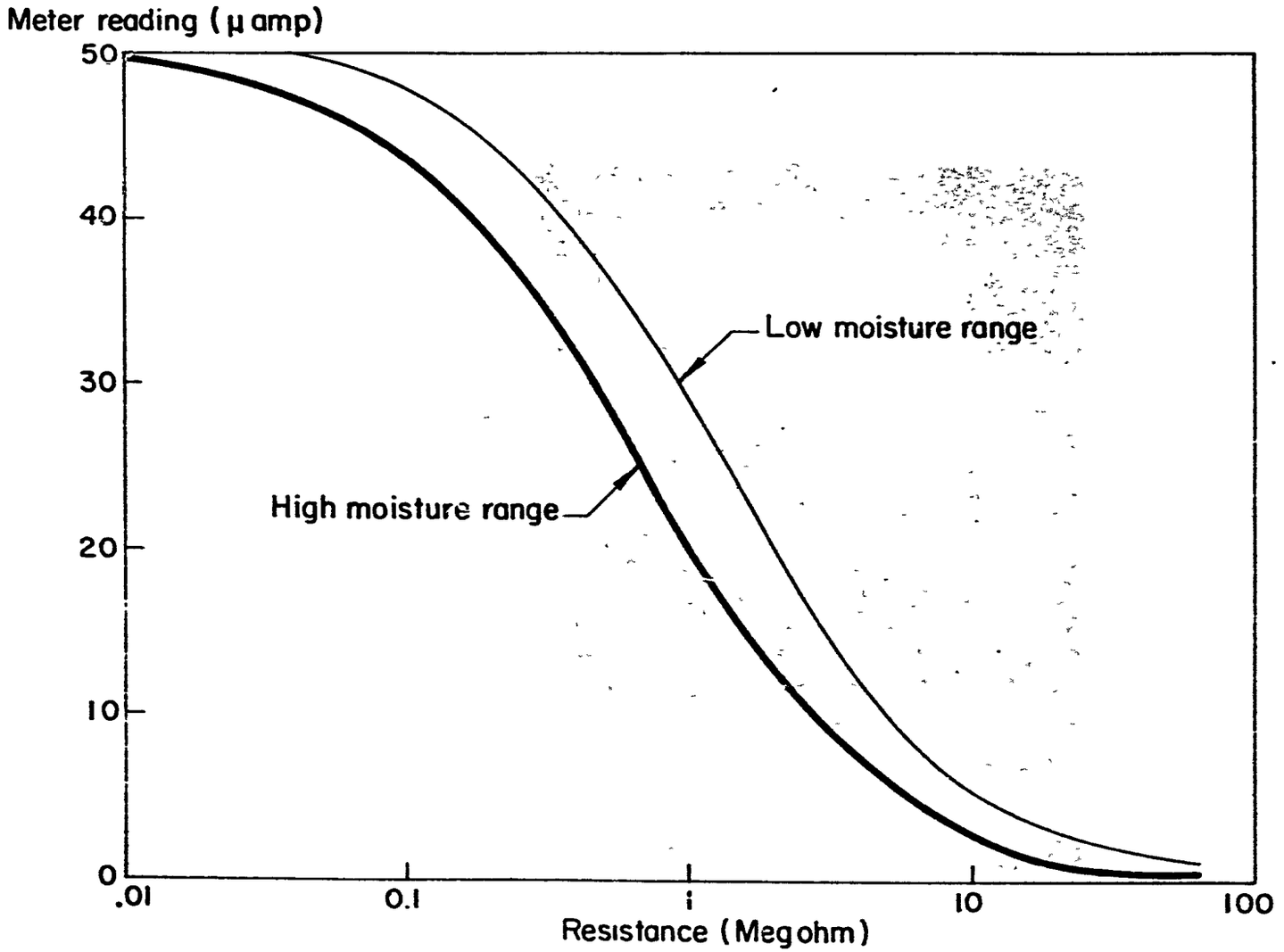

Fig. 7 Meter response vs test cell resistance.

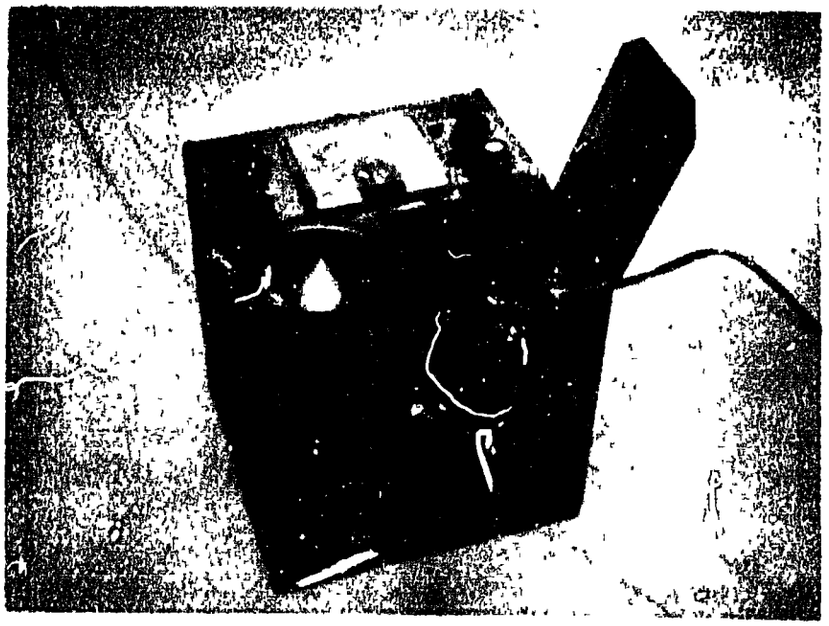

Fig. 8 Moisture tester prototype.

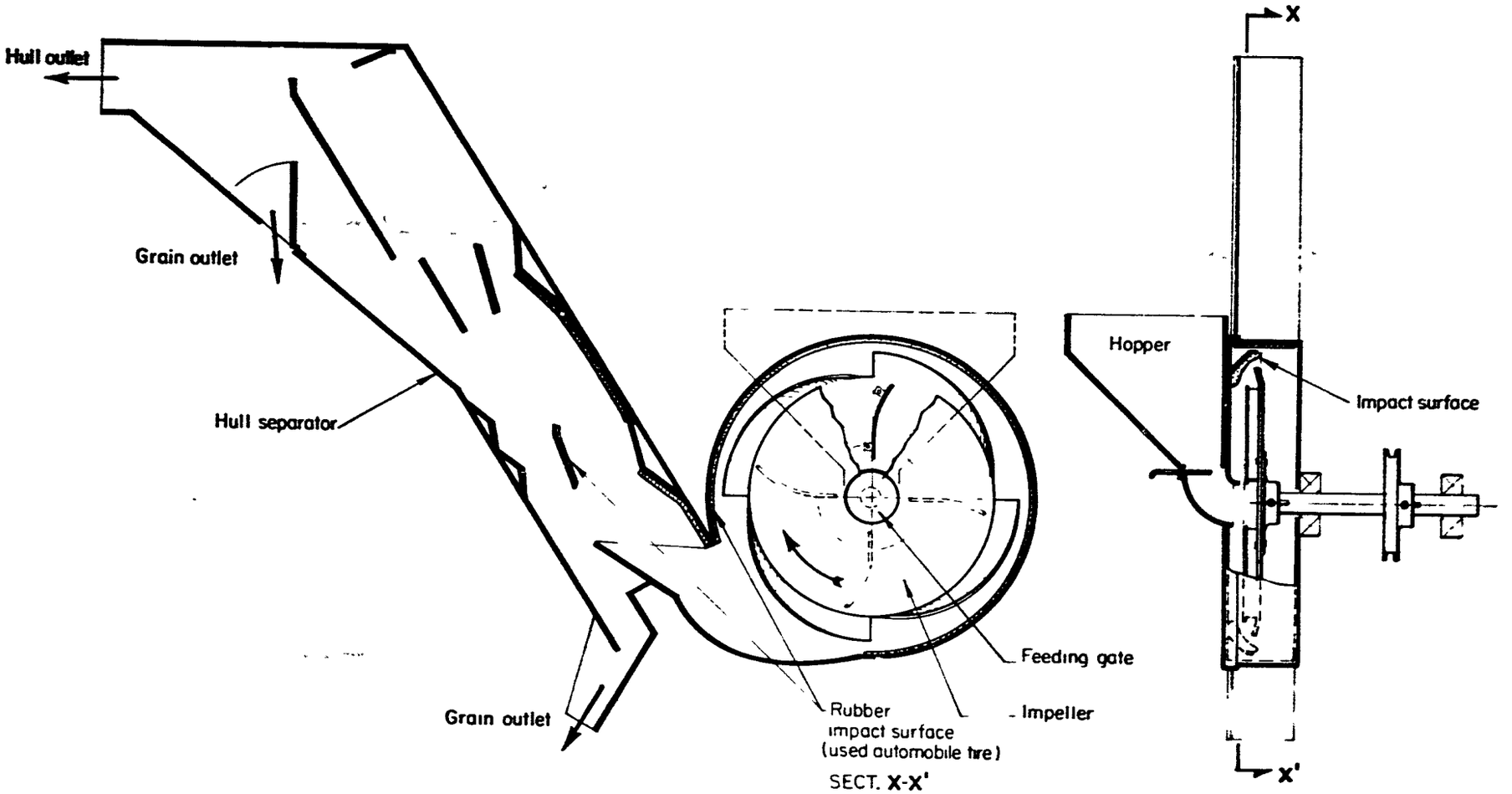

Fig. 9. Schematic drawing of centrifugal huller.

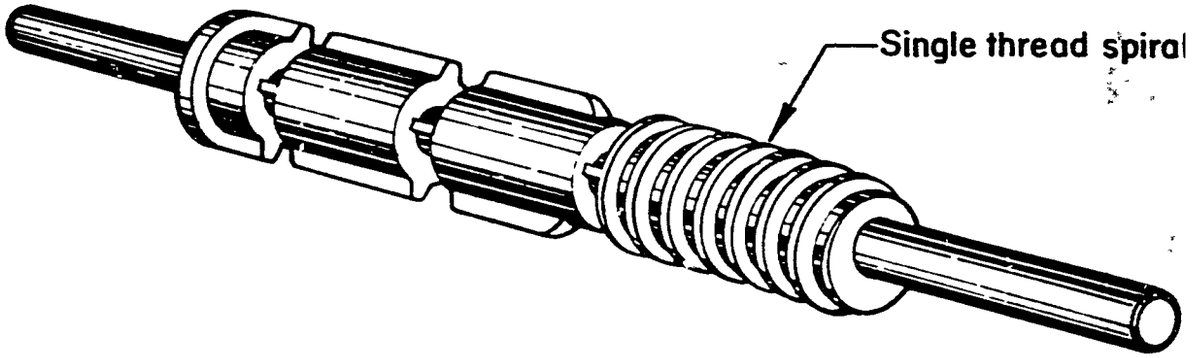

Fig. 10. Experimental four-section two ribbed cylinder screw for the Engleberg mill.

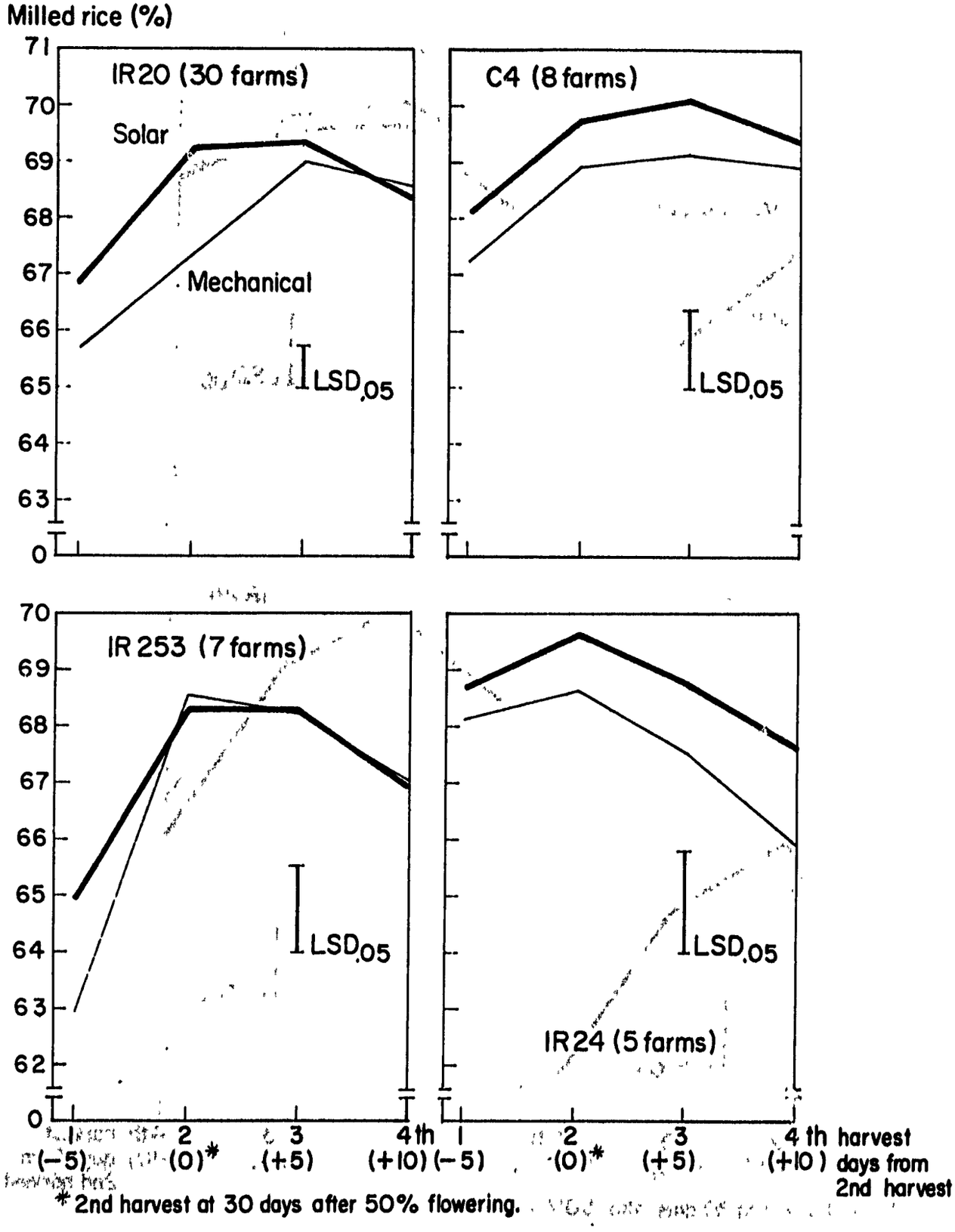

Fig. 11 Milled rice vs. harvest date for dry season study.

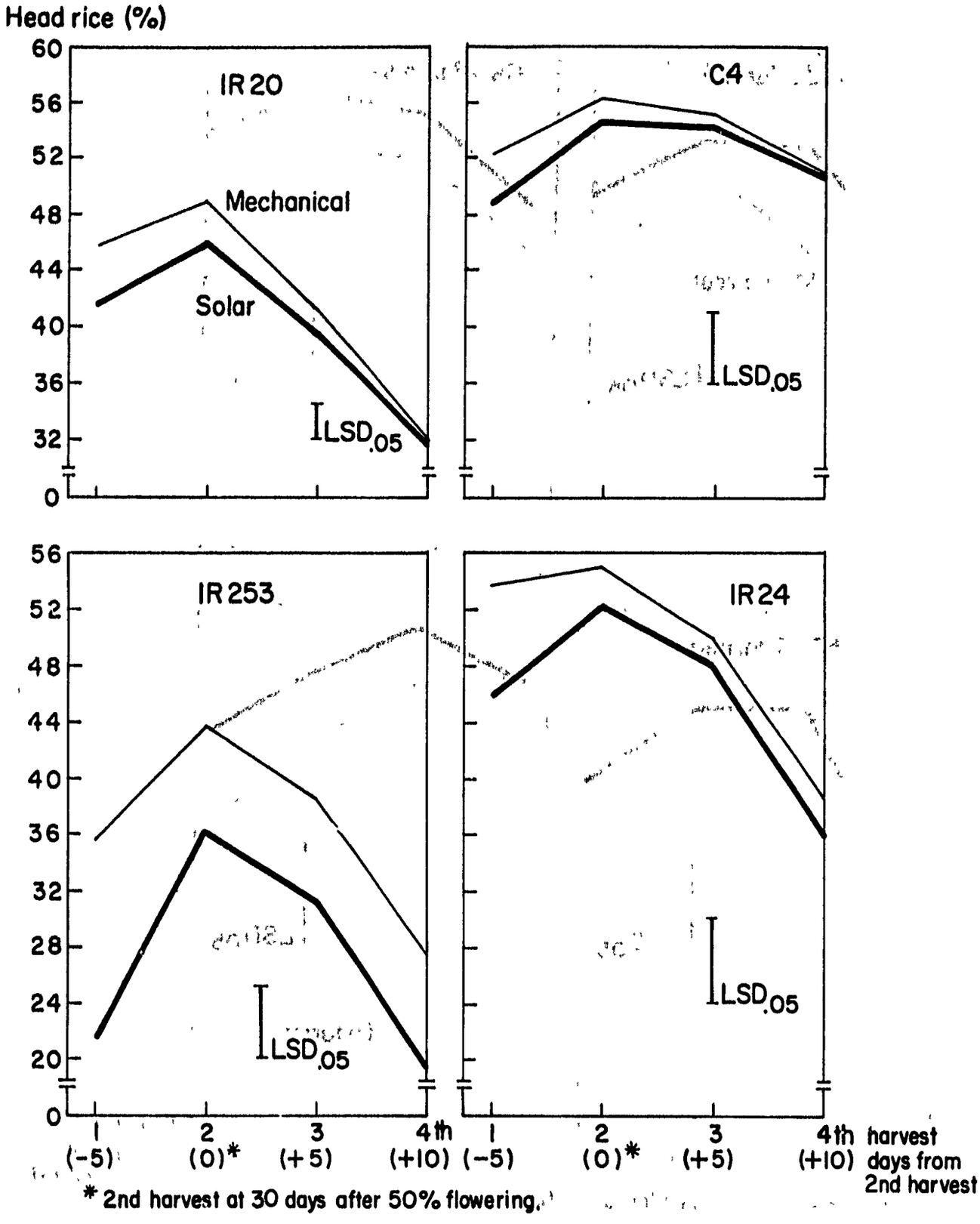

Fig. 12 Head rice vs. harvest date for dry season study.

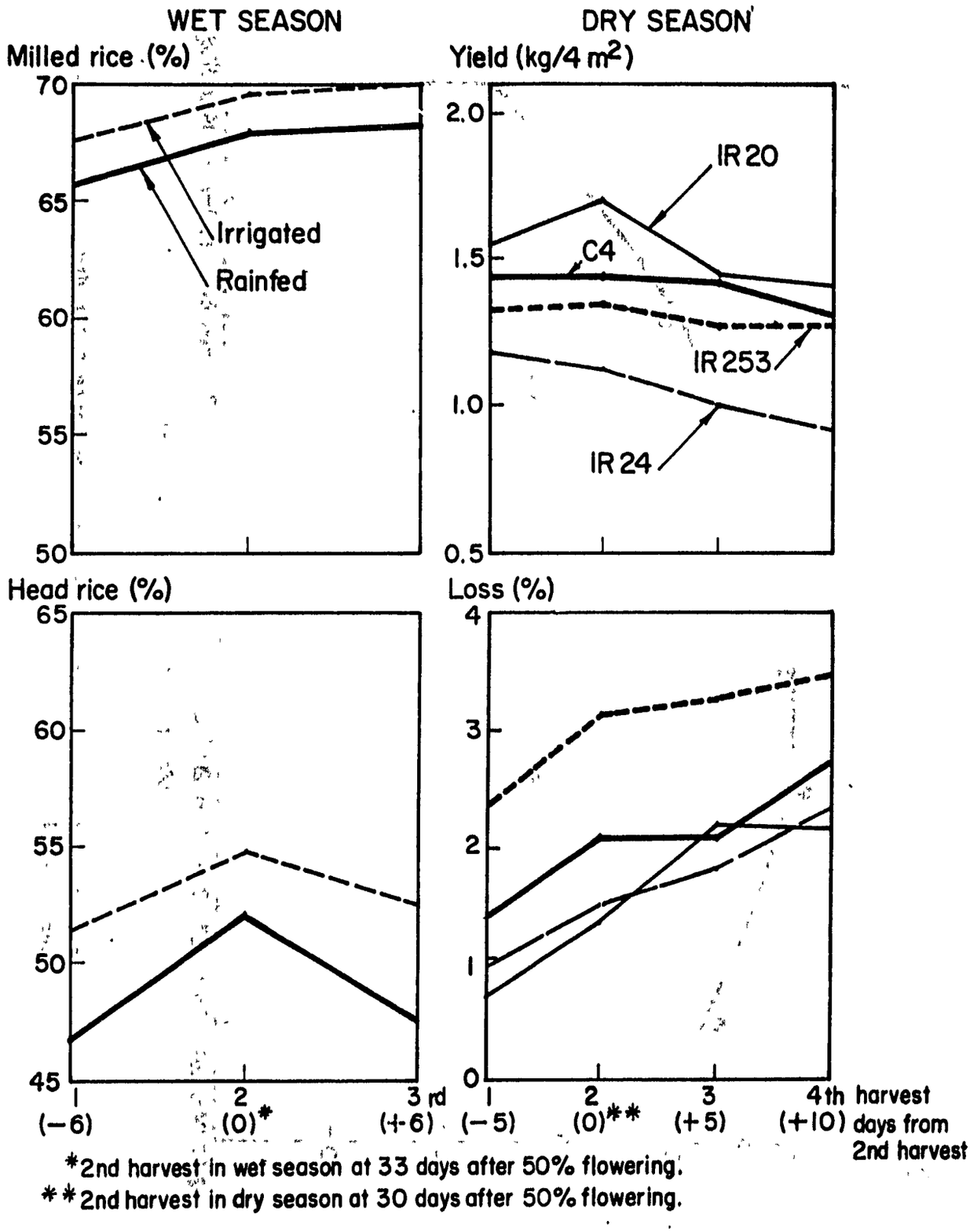

Fig. 13 Milled rice, head rice, yield, and loss vs. harvest date.

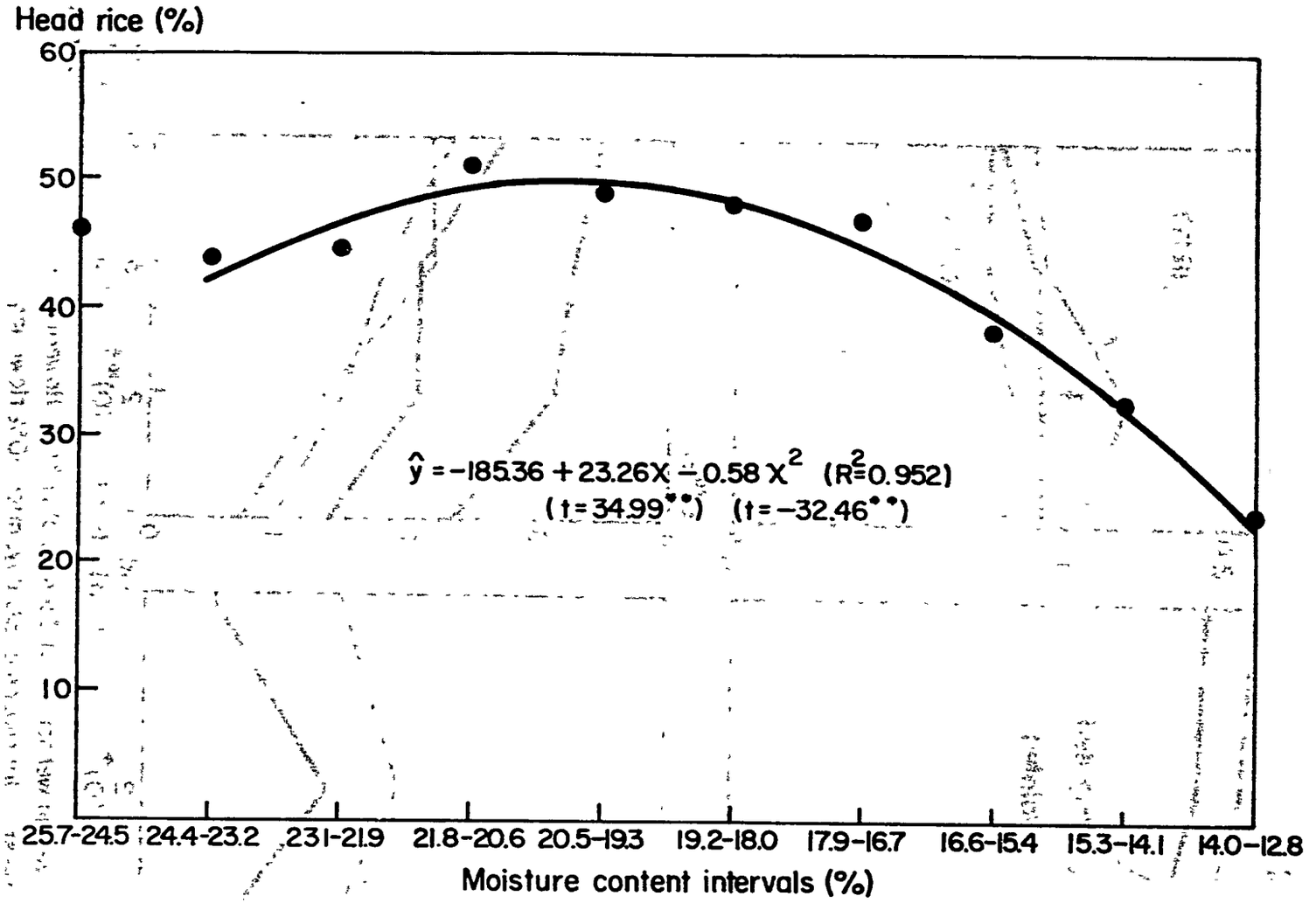

Fig. 14 - Head-rice recovery vs. moisture content for dry season study.

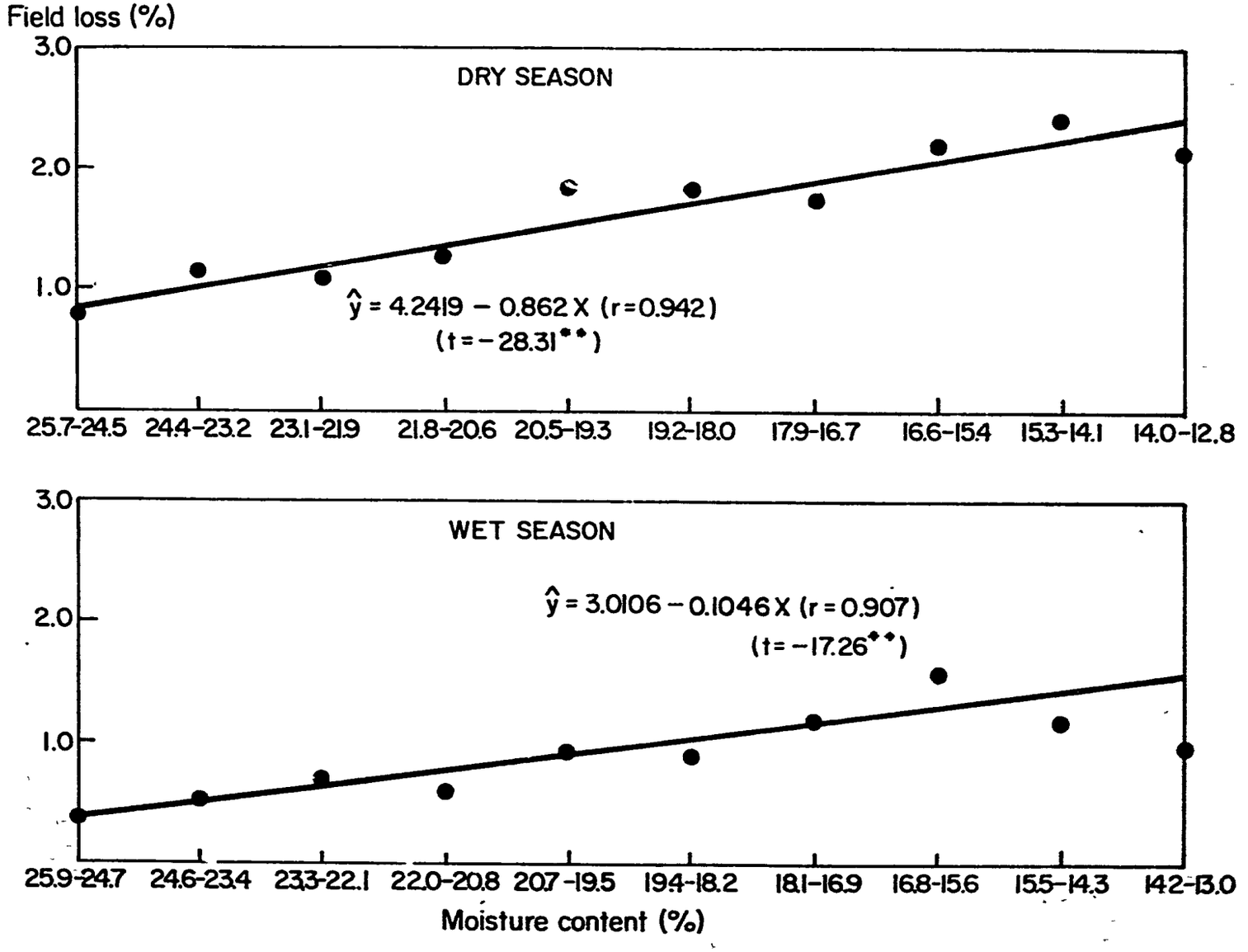

Fig. 15 Field loss vs. grain moisture at harvest. Data from 26 farms in dry season and 22 farms in wet season study.

Copies of this report have been filed with:

Office of Agriculture
Bureau for Technical Assistance
USAID, Washington, D.C.
(100 copies)

The Director
USAID, Manila, Philippines
(3 copies)