AGENCY FOR INTERNATIONAL DEVELOPMENT
WASHINGTON, D. C. 20523

BIBLIOGRAPHIC INPUT SHEET

FOR AID USE ONLY
BATCH #28

1. SUBJECT CLASSIFICATION

A. PRIMARY: Serials — Y-AN20-0000-GG50

B. SECONDARY: Agriculture--Farm equipment--tropics

2. TITLE AND SUBTITLE

Agricultural equipment development research for tropical rice cultivation; semi-annual progress report no.16.Jan..1973 to June.1973

3. AUTHOR(S)

(101) IRRI

4. DOCUMENT DATE	5. NUMBER OF PAGES	6. ARC NUMBER
1973	65p.	ARC RP631.3.161

7. REFERENCE ORGANIZATION NAME AND ADDRESS

IRRI

8. SUPPLEMENTARY NOTES *(Sponsoring Organization, Publishers, Availability)*

(Research summary)

9. ABSTRACT

10. CONTROL NUMBER	11. PRICE OF DOCUMENT
PN-RAB-586	

12. DESCRIPTORS

Agricultural machinery
Intermediate technology
Rice

13. PROJECT NUMBER

14. CONTRACT NUMBER
CSD-2541 Res.

15. TYPE OF DOCUMENT

AID 590-1 (4-74)

SEMIANNUAL PROGRESS REPORT NO. 16

JANUARY 1 TO JUNE 30, 1973

(For restricted circulation only)

CONTRACT NO. AID/csd-2541
Agricultural Equipment Development Research
for Tropical Rice Cultivation

by

AMIR U. KHAN
Development Engineer

FRED E. NICHOLS
Evaluation Engineer

BART DUFF
Agricultural Economist

Agricultural Engineering Department
The International Rice Research Institute
Los Baños, Laguna, Philippines

Copies of this report have been filed with:

Office of Agriculture
Bureau for Technical Assistance
USAID, Washington, D.C.
(100 copies)

The Director
USAID, Manila, Philippines
(3 copies)

TABLE OF CONTENTS

Title	Page
Introduction and Summary	1
Progress Report	5
Design and Development	5
Field Equipment	
8-14 hp tiller	5
Contact herbicide applicator	6
Axial-flow thresher	7
PTO thresher	7
Stripper harvester	8
Drying and Processing Equipment	
Batch dryer	9
Heated-sand parboiler	10
Engleberg mill improvement	11
Direct-flame dryer	12
Test and Evaluation	
Power tiller	13
Commercial prototype rice dryer	14
Batch type dryer	15
Economics of Mechanization	
Grain loss study	16
Large tractor contract operations	19
Economics of processing systems	25
Small-scale metal industry study	26
Thailand engine manufacturing case study	27
Subcontract, Development, Extension and Training Activities	28
Work Plan	30
Personnel List	34
Tables	
Figures	

INTRODUCTION AND SUMMARY

This report, the 16th in a semiannual series, describes project activities carried out under IRRI/AID Contract No. csd-2541 for the period from January 1st through June 30th, 1973. The major objectives of this project are the design, development, testing and extension of indigenously manufactured agricultural machinery for use by small- and medium-scale rice producers and processors in the tropics.

The number of Philippine firms officially producing the IRRI-designed 4-6 hp tiller has risen to six. It is estimated that these firms have produced approximately 1500 units over the past year. In addition, there has been a rapid proliferation in the number of companies which have adopted the IRRI design or modifications of the design and are producing power tillers throughout the Philippines. Initial manufacture of the tiller was also undertaken in Sri Lanka, Thailand, and Vietnam. Testing of prototype herbicide applicators for use in row-sown rice and other upland crops continued during the reporting period. A high-capacity, axial-flow thresher was released to four companies for initial prototype production. A number of these units will be tested and dispersed to field locations for an extended program of field demonstrations and evaluation. A limited number of drawings for this machine were sent to overseas location. Test work on the second prototype PTO-driven thresher continued. A number of refinements in the separator mechanism have resulted in increased separating efficiency. Work with the second prototype stripper harvester revealed a number of desirable design modifications. These are now being incorporated into a third prototype which employs a six-row stripping head and is mounted on an all-terrain type vehicle. This configuration should add mobility and eliminate row-spacing and clearance problems inherent in the second unit.

Work was completed during the reporting period on the 8-14 hp tiller prototype and comparative tests of this prototype and a locally available Japanese machine are being initiated. The results of these tests will form the basis for modifications to be incorporated into a second prototype. Several manufacturers in the Philippines and abroad have indicated interest in the manufacture of the larger tiller. Feasibility studies related to the design and development of tractors in the 20-25 and 40-50 hp ranges are being undertaken to determine their possible viability in the economies of the tropical rice-producing countries.

Four companies are now producing the 1-ton batch dryer in the Philippines. Two manufacturers are also producing the rice hull furnace for use in conjunction with this dryer. Tests on early commercial units indicated a lack of quality control and non-adherence to design specifications which resulted in poor performance. Most manufacturers have been able to make the necessary corrections to eliminate these defects. The addition of a tumbling chamber using ambient air for cooling to the sand conduction drying unit has improved the overall thermal efficiency of this unit. Work

is now underway to evaluate the economic efficiency of alternative fuel sources and to design appropriate heating units to maintain the high sand temperature used in this process. Early work to refine the design of the small Engleberg rice huller mill has resulted in significant improvements in milling recovery with little capital investment required. Work continues on this and new design concepts in the small-scale milling field.

Economic research to gather information on the utilization and ownership patterns of large four-wheel tractors employed for contract operations was completed during the preceding six months. The results indicate a growing market for services of this type and a higher-than-normal rate of return on investments in equipment used for contract operations. A study to gather and assess the magnitude and pattern of field grain losses in paddy production was also completed during the reporting period. Information from this study is to be employed in determining the benefits to be derived from introducing improved harvesting, handling, and threshing systems into the rice production sequence. A first-round rice processing survey with the Bureau of Agricultural Economics, Government of the Philippines, was completed and work is now underway to undertake a three-phase study of small- and medium-scale processing units at three regional locations in the Philippines. A study to determine labor productivity profiles, investment patterns, and technical and economic constraints to expansion of small- and medium-scale metal fabricating industry was begun during the reporting period.

Subcontract test and evaluation activities were revised and expanded during the preceding six months. An agreement was signed with the Vietnam Agricultural Machinery Company (VIKYNO) in Saigon to undertake test, evaluation and manufacturing extension activities in Vietnam. A new subcontract was negotiated in India with Krishi Engines Ltd. of Hyderabad to undertake test and evaluation work in that country. The Lahore Engineering and Foundry Ltd. has now been given the responsibility for test and evaluation work in Pakistan.

Special awards

Mr. Nestor Navasero, senior research assistant in design, was awarded the Presidential Medal at the annual Philippine Inventors Commission contest for his work in the development and execution of the bellows pump design.

UNIDO meeting

A jointly sponsored meeting entitled "Expert Group Meeting on the Design and Manufacture of Wetland (Rice) Mechanization, Harvesting and Threshing Machinery in Developing Countries of Asia and the Far East Region" was held on March 12-17, 1973 in Los Baños. The objective of the

meeting was to synthesize a network of manufacturing extension activities which would allow rapid, widespread diffusion of IRRI designs through existing UNIDO industrial development programs. The results of the meeting are contained in a summary document noted in the following section.

Papers and publications

Arboleda, J. 1973. Accelerated conduction drying of paddy. Paper presented at the Annual Convention of the Philippine Society of Agricultural Engineers, Manila, January 25-26.

Arboleda, J. and A. Manalo. 1973. Paddy drying. Handout sheet for the Agricultural Engineering Department lecture, Rice Production Training Program, IRRI.

Arboleda, J., A. Manalo and A. U. Khan. 1973. Accelerated drying of paddy. Paper presented at the International Symposium on Preservation of Wet Harvested Grain, Paris, March 5-10.

Khan, A.U. 1973. Development of an appropriate mechanization technology. Paper presented at the joint UNIDO-IRRI Expert Group Meeting on the Design and Manufacture of Wetland (Rice) Mechanization, Harvesting and Threshing Machinery in Developing Countries of Asia and the Far East Region held at The International Rice Research Institute, Los Baños, Philippines, March 12-17.

Khan, A.U., A. Amilhussin, J. Arboleda, A. Manalo and W. Chancellor. 1973. Accelerated drying of rice using heat-conduction media. Paper presented at the 1973 Annual Meeting of the American Society of Agricultural Engineers, Kentucky, June 17-20.

Manalo, A. 1973. A low-cost grain dryer. Paper presented at the Annual Convention of the Philippine Society of Agricultural Engineers, Manila, January 25-26.

Nichols, F. 1973. Manufacturing potentials in the less developed countries. Paper presented at the joint UNIDO-IRRI Expert Group Meeting on the Design and Manufacture of Wetland (Rice) Mechanization, Harvesting and Threshing Machinery in Developing Countries of Asia and the Far East Region, IRRI, Philippines, March 12-17.

Orcino, N. and B. Duff. 1973. Technical and economic characteristics of tractor contract operations in Central Luzon. IRRI Saturday Seminar, June 30.

Policarpio, J. 1973. Power tiller and tractor development at IRRI. Paper presented at the Annual Convention of the Philippine Society of Agricultural Engineers, January 25-26, Manila.

Ramos, B., J. Policarpio and F. Nichols. 1973. Harvesting and threshing equipment development at IRRI. IRRI Saturday Seminar, June 23.

Roxas, M. 1973. Report on the pilot program for the introduction of improved farm machineries in the land reform area of Nueva Ecija. Nueva Ecija Land Reform Integrated Development Program, Government of the Philippines, Cabanatuan City, November 1972-March 1973.

UNIDO-IRRI Agricultural Engineering Dept. 1973. Report on the joint UNIDO-IRRI expert group meeting on the design and manufacture of wetland (rice) mechanization, harvesting and threshing machinery in developing countries of Asia and the Far East region, IRRI, Philippines, March 12-17.

PROGRESS REPORT NO. 16
JANUARY 1 TO JUNE 30, 1973

The following personnel were responsible for these projects:

Design and Development

Field machinery:

1. 8-14 hp tiller	J. Policarpio
2. Contact herbicide applicator	N. Navasero
3. Axial-flow thresher	A. U. Khan, B. Ramos
4. PTO thresher	A. U. Khan, B. Ramos
5. Stripper harvester	A. U. Khan, J. Policarpio

Drying and processing equipment:

6. Batch dryer	A. Manalo
7. Heated-sand parboiler	A. U. Khan, J. Arboleda
8. Engleberg mill improvement	J. Arboleda

Test and Evaluation

9. Power tiller	C. Padolina
10. Commercial multipass dryer	C. Padolina
11. Batch-type dryer	C. Padolina

Economics of Mechanization

12. Grain loss studies	B. Samson
13. Large tractor contract operations	N. Orcino
14. Economics of processing systems	Z. Toquero, B. Duff
15. Small-scale industry studies	B. Duff
16. Small engine manufacturing study	W. Rewan

DESIGN AND DEVELOPMENT

Field equipment

8-14 hp tiller

The design of an 8-14 hp tiller was described briefly in semiannual report No. 15. A prototype unit (fig. 1) with a 7.5 hp diesel engine was completed and preliminary testing work was undertaken during this period. This tiller is equipped with a primary transmission consisting of a standard three-speed automotive gearbox. The manufacture of gears and transmission components requires capital-intensive production technology which is not readily available in the less developed countries. Therefore, a standard transmission has been used in the design of this tiller to simplify its manufacture in the developing countries. The secondary transmission uses single-strand 2.54-cm pitch roller chain to drive each wheel through individual dog-type steering clutches.

Preliminary tests were undertaken on the prototype machine to compare its performance with a popular Japanese power tiller. The two tillers are equipped with identical 7.5 hp diesel engine. The travel speed of the two machines in different gears was as follows:

	IRRI prototype Travel speed, kph	Japanese tiller Travel speed, kph
(a) Transmission setting		
First gear	3.76	2.28
Second gear	6.94	3.62
Third gear	8.38	4.98
Fourth gear	None	9.35
(b) Rotary tiller blade diameter	40.64 cm	45.72 cm
Tiller shaft speed	287 rpm	245 rpm
Blade peripheral velocity	353 m/min	367 m/min

The travel speeds indicate that the standard three-speed Jeep transmission does not offer the wide speed range available with the Japanese power tiller. The travel speed of the Japanese power tiller in first gear, however, was quite slow and was used only under difficult soil conditions. Generally, second gear on the Japanese tiller is used for land preparation. The input pulley diameter of the primary transmission of the IRRI tiller is now being increased to obtain 3.218 kph travel speed in first gear and approximately 8.045 kph in third gear, which will permit transport of heavier loads and use on rougher roads than the Japanese power tiller.

The relationship between forward travel speed and the peripheral velocity of the rotary tiller blades of the Japanese tiller is 1:9.2 and 1:5.8 in the first and second gears, respectively. The rotary tiller rpm

of the IRRI unit is being modified to obtain an approximate relative velocity of 1:7 between the ground speed of the machine and the peripheral velocity of the rotary tiller blades.

Local manufacturers, who have observed this power tiller in operation, have shown considerable interest in its production. The machine is undergoing further testing and development.

Contact herbicide applicator

Five concepts for applying herbicides using direct contact methods were described in report No. 15. These application concepts were evaluated with experimental models in the field and a suitable concept was selected on the basis of (1) design simplicity, (2) operational ease, (3) uniformity of herbicide application, and (4) feasibility for local manufacture. A manually operated prototype contact applicator was developed employing this concept. The machine (fig. 2) has three rollers (ground, pick-up, and feed). The feed roller is held in positive contact with both the ground and pick-up rollers by two springs. The pick-up roller is partially submerged in a pan containing herbicide solution. As it rotates, the surface of the pick-up roller is wetted with herbicide solution which is then transfered uniformly to the ground roller by the feed roller. The solution pan is connected by a tube with the main herbicide tank to maintain a uniform liquid level.

Liquid is stored in the main tank which has an airtight stopper on the top and a 1.27-cm outlet at the bottom. The open end of a tube leading from the tank is located at a fixed level in the feed pan. As liquid is removed from the pan, the liquid level drops below the tube opening, allowing air to enter the main tank. This causes the air pressure in the main tank to rise, which forces solution through the tube to the feed pan. This raises the liquid level in the feed pan, closing the tube outlet, and preventing additional air from entering the main tank. As liquid is used from the feed pan, the process is repeated, which maintains a constant liquid level in the feed pan.

Preliminary tests with the applicator seems to favor use of translocated herbicides which enter the plant system rather than contact-type non-selective herbicides. When Gramoxone was applied during dry weather with the applicator, only the top portions of the weeds were killed. On the other hand, when the same chemical was applied on a clear but humid day, the weeds were completely killed.

Further studies will evaluate the effectiveness of different herbicides and at various application rates using the contact applicator.

Axial-flow thresher

Attention was directed during this period towards finalizing the design of the axial-flow thresher. The machine has undergone many modifications and the final design (fig. 3) has now been released to four companies in the Philippines. The wire loop threshing drum was changed to a peg tooth cylinder which largely eliminated the repair problem. The upper and the lower concaves were fabricated from 0.45-cm round bars spaced 1.1 cm apart. The use of the round bars simplifies manufacture because the perforated sheetmetal employed in an earlier design is not locally produced in most Asian countries.

The width of the rotary screen grain cleaner was increased from 33 cm to 40 cm with a marked improvement in the separation of grain and short straws. A sheetmetal trough was installed inside the rotary cleaner to eject straw pieces adhering to the rotary screen. A retractable, full-length feeding platform was placed adjacent to the feed spout, permitting convenient, uniform feeding of paddy bundles. With the feeding platform, one man can conveniently feed paddy at threshing rates of up to 1140 kg/hr. Three men are normally required to operate the thresher, one to feed, one to place paddy bundles on the platform, and one to collect and bag threshed grain.

Some slippage problems were encountered with the original single-drive belt system operating the auger and cleaning fans. This system was replaced with independent belt drives for each of these components. A seat and a hitching arrangement were designed to permit towing of the thresher behind a power tiller with the operator sitting on the machine.

The response from farmers and manufacturers who have observed the machine in operation has been very encouraging. The four manufacturers who have received drawings are enthusiastic about its market potential. Orders have been placed for 18 threshers which will be used for extended evaluation and demonstration trials in the Philippines and other Asian countries through our cooperating agencies. A limited number of engineering drawings have been sent to interested manufacturers in other Asian countries. These manufacturers have expressed a preference to build a prototype unit from the drawings rather than wait for model machines to arrive from the Philippines.

PTO thresher

Extensive tests were conducted on the second prototype PTO thresher at IRRI and other locations in the Philippines. During these tests, a threshing output of up to 2.5 tons of paddy per hour was obtained. The moving belt conveyor facilitates rapid, uniform feeding and has been primarily responsible for the increase in threshing output. The separating losses during the tests on dry crops were 1 to 2 percent which is considerably less than the 6 percent loss observed in our tests of the McCormick

threshers used in Central Luzon. The threshing output of the PTO thresher is comparable to the McCormick thresher and is satisfactory for custom threshing operations; cleaning quality, however, needs further improvement.

A number of design modifications have been incorporated to improve grain-cleaning efficiency (fig. 4). The concentric space between the outer cylinder and the No. 2 screen has been widened to 15 cm by increasing the diameter of the outer cylinder. This change improved the airflow through the tumbling grain mass. The annular impurities outlet was widened by shortening the outer cylinder length by 2.5 cm. Air from the axial fan passes through a special tapered duct which delivers air to the concentric opening between the outer cylinder and the No. 2 screen. The outlet end of the tapered duct was widened to spread the airflow and ensure proper winnowing action. It was observed that a large quantity of grain remains in the outer cylinder during operation. This grain slides along the bottom of the outer cylinder and does not tumble adequately through the airstream. To overcome this problem, the number of grain-conveying louvers was increased from 64 to 96 in the outer cylinder The number of grain-tumbling louvers was also increased from 24 to 48. The tumbling louvers have been arranged in a configuration which produces a scattering pattern in the tumbling grain as it falls through the airstream.

Some grain was not adequately winnowed because it was delivered too close to the elevator trough from the No. 2 screen. A 30.5-cm portion of the No. 2 screen near the grain conveyor trough end was replaced with a solid sheetmetal cylinder.

The straw thrower appeared to be blowing large quantities of air into the concentric spaces between the No. 1 and No. 2 screens and the outer cylinder. This blowback effect carried additional straw into the concentric space and interfered with the smooth flow of air from the winnowing fan. The diameter of the straw thrower opening was enlarged from 25.4 to 30.5 cm which reduced the blowback effect but did not eliminate it. The concentric openings near the terminal points of the No. 1 and No. 2 screen straw thrower end were closed and the length of the No. 2 screen shortened to provide an opening for chaff. The modified thresher is being tested and, if necessary, further modifications will be incorporated to achieve satisfactory grain cleaning.

Stripper harvester

A prototype four-row stripper harvester has been described in the reports Nos. 14 and 15. This machine was field tested extensively and subsequently modified to improve its performance. The original machine did not employ a grain-winnowing mechanism and some chaff was retained with the grain which interfered with the operation of the auger and elevator. The woven-wire belt type straw walker was replaced with a solid rubber belt with metal slats. The rubber belt delivers the grain-chaff mixture onto a vibrating wire rake. The grain drops through the vibrating

rake into a cross-feed auger and is transferred to a grain elevator for delivery to bags. A centrifugal blower was installed to winnow the grain as it falls through the vibrating rake

The four-row machine has 20-cm wide pneumatic drive wheels on each side of the stripper header. A row spacing of 25 cm does not permit use of wider tires on this machine In an attempt to improve field mobility, a half-track system was introduced; however, long tracks are not well suited to sharp turns. In addition, the use of wide crop dividers, necessary to accommodate the two drive wheels, significantly reduces the throat openings of the side intake mechanisms. This requires plants at the edges of the swath to be deflected towards the center of the swath before they can enter the machine. This bending and flexing hinders entry into the machine, which results in unthreshed losses at the swath edge. We are now designing a six-row stripper harvester (fig 5) in which all wheels are located behind the stripping header. This arrangement will permit the use of wider tires to improve mobility and also allows installation of narrow crop dividers which facilitate easy entry of plants into the machine. In addition, the new machine is being designed for mounting on an ATV with six drive wheels and a skid steer transmission (fig 6).

The present four-row stripper harvester design requires raising and lowering of the entire machine when adjusting the height of the stripping mechanism. Operation of the mechanical lifting mechanism also requires substantial effort from the operator. In the design of the six-row harvester, the whole mechanism is mounted rigidly on the chassis and drive wheels with the exception of the stripper header. The header is suspended on a parallelogram linkage and can be independently raised and lowered to the desired harvesting height.

Experience with the four-row machine indicates that slightly more than 7.5 hp will be required to harvest four rows. The new six-row design will be equipped with a 19 hp aircooled engine.

Drying and processing equipment

Batch dryer

A low-cost diesel oil burner was developed for the batch dryer described in report No. 15. This burner can be used in place of the kerosene burner or the rice hull furnace that were developed earlier for the batch dryer.

The burner (fig. 7) consists of a pressurized fuel tank, a burner enclosed in a sheetmetal shroud, and an air duct. Oil is contained in the tank under a pressure of 30-35 psi using a manually operated air pump. A filter in the oil line is used to remove any impurities that might clog the burner orifice. The oil is preheated and vaporized in the burner prior to ignition. A perforated sheetmetal cylinder is placed around the

burner to ensure complete combustion with an elbow-shaped air duct serving as a combustion chamber.

Tests with the burner indicated an increase of 11°C in the drying air temperature at an airflow rate of 49 cu m/min against a static pressure of 1.9 cm of water. The heat generated by the burner and the waste heat recovered from the 3 hp gasoline engine increased the drying air temperature by 17°C. This heat is adequate for effective operation of the batch dryer.

Heated-sand parboiler

The details of a rotary parboiling machine using hot sand as a heat-transfer medium have been described in previous reports. Report No. 15 included information on a preheating rotary conveyor that was designed to utilize the exhaust heat from the dryer to preheat ingoing grain. The exhaust heat from the machine is divided into two parts, one from inside the parboiling cylinder, consisting primarily of steam, and the other from around the outside of the parboiling cylinder which is dry, hot air. Only the latter air is channeled through the preheater chamber. This minimizes condensation of moisture on the ingoing grain. Preliminary tests with the preheater indicated the following results:

(a) The preheater chamber removes an average of 2 percent moisture from the grain prior to entry into the sand chamber.

(b) At feed rates of about 200 kg of paddy per hour, sand temperatures stabilized at 95°C. The optimum stabilization sand temperature is 150°C. This reflects a need for increased burner capacity and better insulation around the machine.

(c) A reduction in white bellies was observed in the rice parboiled at the higher sand temperatures as compared to the paddy parboiled at lower sand temperatures.

To further improve the efficiency of the machine, the following modifications were introduced (fig. 8):

(a) A perforated sheetmetal rotary cooling drum was installed to tumble hot outgoing grain in ambient air. This process permits the release of additional moisture and further cools the grain. The cooling drum has a series of slanting pockets which simultaneously tumble and move the grain axially through the cylinder.

(b) An additional burner was installed on the machine. The four burners now have a heat generation capacity of 160,000 BTU per hour.

(c) A double insulation wall was added on the hot side of the machine to reduce heat losses.

Preliminary tests indicate that the cooling drum does not retain the grain long enough for adequate cooling. The slanting pockets are being redesigned to eliminate this problem.

Engleberg mill improvement

A large percentage of paddy is milled in rural areas of Asia with the Engleberg machines. The use of these mills results in low total milling recoveries and large quantities of broken rice. Attempts are underway to improve the Engleberg design to partially eliminate this loss of paddy resulting from inefficient milling. The primary objective of this work is to improve milling performance by modifying the existing components of the design so that old mills can be easily modernized by simply replacing a few parts. The modifications are intended to:

(a) Provide more positive movement of the paddy from the point at which paddy enters the mill until it is expelled at the outlet;

(b) Evenly distribute pressures throughout the space between the cylinder and the outer housing of the machine;

(c) Replace the adjustable huller blade with a series of uniformly distributed fixed hulling ribs attached to the perforated screens (poor blade adjustment results in significant deterioration of milling performance on existing machines);

(d) Minimize adjustment of the outlet opening through the use of a weight-loaded automatic discharge gate.

An Engleberg mill equipped with a 28-cm cylinder with a rated capacity of 175-265 kg paddy per hour was obtained from a local manufacturer. A bran-aspirating arrangement was installed on this mill. Attempts were also made to incorporate some features from modern Japanese mills. The following modifications which are illustrated in fig. 9 were evaluated with the Engleberg machine:

(a) The sliding gate at the grain outlet was replaced with a weight-loaded gate. The weight is mounted on a screw and can be adjusted to change the pressure required to open the gate. The weight-loaded gate permits automatic variation in the discharge opening and is controlled by the pressure within the machine. This eliminates the need for repeated adjustment to control internal pressure.

(b) Cylinder. The original steel cylinder had a triple-threaded spiral at the inlet and a three straight-rib portion on the rest of the cylinder. This cylinder was replaced by an experimental unit which had a continuous single-thread spiral section on the inlet end and two straight ribs along the remainder of the cylinder. The smaller-pitch single-thread screw exerts greater axial pressure on the grain.

(c) Lining insert. A semicircular sheetmetal liner was installed between the top casing and the steel cylinder. This insert had two openings which matched the locations of the grain intake and outlet openings on the casing. The sheetmetal insert had four 3-mm and 6.5-mm long ribs mounted in a slanting position at a 15° angle with the cylinder axis. The inlet side of the liner had a semicircular bent flat iron piece installed to construct the space between the cylinder and the lining insert. A full-length straight rib was installed on the lining insert at the opposite side of the blade.

(d) Two 6x3-mm full-length straight ribs were installed in the bottom screen.

Preliminary test results with these modifications are included in Table 1. The data indicated that maximum total milling and head yields were obtained with all four modifications (a, b, c, d) with an average blade clearance of 6.9 mm. The combination of the weight-loaded gate and two straight ribs on the lower screen provided the second best performance. In both of these treatments, grain temperatures were considerably higher than the original machine.

Tests on commercial Engleberg mills near the Institute indicated poorer total recovery and head rice yields than obtained with the test mill at IRRI. The bran produced by the commercial machines was coarse and contained fine brokens because these machines had large screen perforations. The large screen openings do, however, produce milled rice that is free from bran and fine brokens.

These and other modifications will be studied individually to establish the relative improvement in milling performance. The number of ribs and the rib angle seem to have a significant effect on milling performance. Attempts will be made to establish the optimum number and the details of the rib design to achieve improved performance from the Engleberg mills.

Direct-flame dryer

The thermal efficiency of the flame dryer increased from 35 to 60 percent with the addition of a hopper which preheats grain prior to flame exposure. The grain temperature increased from 27° to 71° C in the hopper and up to 85°C after the 40-second flame exposure at a grainflow rate of 42 to 84 kg dry matter per hour.

Drying efficiency, the ratio of the moisture removed multiplied by the latent heat required to evaporate the water from the grain to the heat input of the burner, ranged from 25 to 35 percent. When the direct-flame dryer was used in conjunction with a heated-air dryer, however, drying efficiency increased to 85-90 percent.

Paddy dried in the direct-flame dryer and subsequently with a batch dryer at 35°C air temperature yielded 65 percent head rice compared to 55 percent head rice of paddy dried with heated air alone. Gelatinization of the grain starch due to the flame treatment and the uniform final moisture content of 13-14 percent contributed to the 10 percent points increase in head rice.

TEST AND EVALUATION

Power tiller

Three additional manufacturers submitted commercial prototype units for performance and durability testing. One of the original manufacturers of the IRRI-designed tiller requested a performance and durability evaluation of an improved design they are developing. Each machine was thoroughly inspected prior to operation and all modifications from the original design were noted.

The first unit tested was equipped with a centrifugal clutch. The clutch failed after 55 hours of operation and was removed for the balance of the test. Cage wheel spokes failed at 12 hours and 82 hours. The hitch assembly failed at 95 hours. The test was terminated at 113 hours and the tiller disassembled and inspected. Evidence of water was found in the main drive housing. We found that the axle shaft and shaft housing were not a true hexagon shape which limited interchanging of axle shafts and use of rotary tillage tools on the machine. Wear on the small sprockets in the speed reduction system was excessive. This wear was probably due to excessive slack in the chain as no provision for maintaining proper chain tension had been provided.

Upon delivery of the second unit, a number of deviations from the original design were noted. Based on prior experience, we were sure that some components would fail or provide unsatisfactory performance. The tiller was returned to the manufacturer for improvement prior to testing. The tiller was later returned to IRRI with all requested changes and operated for 115 hours with no failures or problems. Upon disassembly and inspection, some water was found in the main chain case. Felt seals had been used on the axle shaft rather than the recommended double-lip rubber seals. Bolts on the main drive sprockets had loosened and a new locking strip was recommended. Overall machine performance and fabrication quality of the unit were excellent.

Testing of the third unit was initiated although numerous design changes had been made which we felt would limit the unit's durability. Failure of the handle bar assembly bracket and the main chain case occurred after 11 hours of operation. We disassembled the unit and noted all other defects.

The improved design was tested for 88 hours. The test was terminated when the main input pulley failed. A new handle bar design had failed at 32 hours and the engine mount failed at 37 hours. The tiller was disassembled on termination of the test and thoroughly inspected. Some wear of the reduction gears was noted but this was obviously caused by incorrect assembly. The reduction gear shaft and main input shaft were worn at the bearing seat due to an incorrect bearing-shaft fit. Field performance of the tiller was excellent. Each manufacturer was provided with a detailed report of his tiller's tests and our recommendations for further improvement.

Five locally manufactured tillers have been placed with cooperating agencies (UNESCO/UNDP and NELRIDP) in Central Luzon for evaluation by farmers. Reports received to date indicate the need for frequent replacement of the V-belt used in the main drive and weld failures in the implements. These tillers were early production models and the manufacturers are now using a B-section belt and have improved implement fabrication techniques. These reports included many comments from the farmers who operated the tillers and extension workers assisting with the evaluation. Most frequent comments were:

(a) The power tiller works much faster than the carabao.
(b) Better-quality land preparation was accomplished.
(c) Farmers were enthusiastic about operating the machine.
(d) Farmers easily learned the techniques of operation.
(e) Operation was not as tiresome as that of many other power tillers and the carabao.

Commercial prototype rice dryer

We conducted a performance evaluation test on a foreign-designed locally fabricated two-ton multipass batch-type dryer. The dryer is designed to be powered by a diesel engine but was coupled to a 5 hp electric motor for the test.

A continuous record of the drying air temperature and grain temperature at six locations in the dryer was obtained with a 16-channel Brown recorder. Grain samples were taken every 20 minutes to determine grain moisture reduction per hour. Static pressure in the drying chamber was measured and the fan capacity verified at two static pressure heads.

A comparison of the data from the test with the manufacturer's specifications is given below. Overall test results are shown in Table 2. These results should not be taken as conclusive as only one test was completed. A shortage of paddy and mechanical difficulties prevented further tests.

	Manufacturer's specifications	As tested
Recycling, hr	3	3.32
Moisture content reduction, percentage point/hour	1	0.93
Fan diameter, cm	38.10	36.83
Fan rpm	3200	3000
Fan capacity, $\frac{\text{cu m}}{\text{sec}}$	0.944	0.374
Fuel consumption, liter/hr	3.10	2.65

A detailed report of the dryer's performance and recommendations for design improvement and simplification were provided to the manufacturer.

Batch-type dryer

A second manufacturer's production prototype was evaluated. The manufacturer supplied the dryer equipped with a forward curve centrifugal blower and a diesel fuel burner modified to operate on kerosene. Two drying beds were supplied, one a bolted assembly unit and the second a rapid-assembly interlocking-seam unit. Due to a lack of material for drying, only the blower and burner were tested by using a device adopted from the data on the Standard Test Code for Air Moving Devices.

The engine was adjusted to the recommended 3200 rpm, giving 1100 rpm for the blower. Using an Alnor Velometer, static pressure was set at 2.032 cm of water by adjusting the diffuser at the end of the air duct. Air velocity was measured at 8 traverse points in the discharge duct, giving an average of 8.25 m/sec. At this air velocity and with an air duct area of 0.072 sq m, the blower produced only 0.06 $\frac{\text{cu m}}{\text{sec}}$. Based on the dryer bed area of 5.02 sq m, the blower is rated at 0.001 $\frac{\text{cu m}}{\text{sec}}$ per cubic meter of grain, which was far below the recommended rate of 0.5 $\frac{\text{cu m}}{\text{sec}}$ / cu m of grain for rough rice.

Tests with the burner unit were discontinued because of a missing secondary control valve. Without this control valve, a large flame occurred at the initiation of the test, which created an unacceptable hazard to further operation. The manufacturer was informed of the test results and recommendations were provided to bring the blower and burner up to specifications.

After modification, the blower and burner were resubmitted for evaluation. The blower capacity was increased to 4.701 $\frac{\text{cu m}}{\text{sec}}$, which was still below the recommended volume. The secondary control valve permitted precise control of the initial flame but the burner did not function

efficiently on kerosene. The manufacturer was informed of the test results and is now fabricating an axial-flow fan and simple kerosene pot burner for further evaluation. On receipt of the new fan and burner unit, the complete dryer unit will be tested.

ECONOMICS OF MECHANIZATION

Grain loss study

This research project had the following objectives: (1) to determine field loss characteristics incurred in harvesting-threshing operations, and (2) to provide the design and development group with additional information on the point in the production sequence at which benefits may be maximized through the introduction of improved harvesting-threshing technologies.

Field work was conducted during the 1972 wet and 1973 dry seasons in Gapan, Nueva Ecija of Central Luzon. The 1972 wet season project was conducted on randomly selected paddies located in three barrios in Gapan, Nueva Ecija. Two of the barrios are irrigated and one is rainfed. A total of 50 sample paddies, all planted to the dominant variety in the area, IR20, were selected for crop cutting and loss determination. Replicated crop cut yield samples from the same paddies were taken one week before maturity, at maturity, and one week after maturity.

Unlike the survey work undertaken during the 1972 wet season, an attempt was made to incorporate a wider range of rice varieties and harvesting dates into the 1973 dry season sample. This was to obtain a broader picture of the effect of varietal type on loss patterns. Four high-yielding varieties which fall under two varietal shattering characteristics were used in this study. They were IR20 and IR24 for medium-shattering and C4-63G and IR253 for high-shattering susceptibility, respectively. Yield and ground loss samples were taken at four harvesting dates: 5 days before maturity, at maturity, and 5 and 10 days after maturity. These samples were then analyzed to determine the effect of date of harvest on losses due to shattering and on subsequent drying and milling recovery efficiencies.

Grain yield and moisture content. Table 3 shows the moisture content and rough rice yield obtained at different harvest dates for the different varieties used in the 1972 wet and 1973 dry season samples. In general, yields increased as the grains ripened until a maximum was reached at the approximate date of maturity for all varieties studied. After reaching the maximum values, yield values decreased due to a reduction in the moisture content and higher shattering losses.

The moisture content was about 23 percent on the first harvest date for all varieties during both seasons. A gradual decrease in moisture was

observed up to the last harvest date. As the grains matured, the moisture content decreased, although this was a gradual process.

During the wet season, the yield of IR20 did not vary significantly at different harvest dates but significant differences occurred between the yield of paddies located in the irrigated and rainfed areas (fig. 10).

Although the yield of IR20 at different harvest dates shows no significant difference during the wet season, significant differences were observed during the dry season between varieties (fig. 11). In the irrigated barrios, the grain yield and moisture content of IR20 differed markedly between seasons. Yields were higher and the moisture content decreased more rapidly in the dry season due to the high level of solar radiation and greater photosynthetic activity of the plants. Among varieties, IR20 gave the highest yield, followed by C4-63G, IR253 and IR24, respectively. This observation is partially explained by the different fertilization rates used on different varieties.

Grain loss. The grain losses of different varieties at alternative harvest dates for the 1972 wet and 1973 dry seasons are shown in Table 4 and fig. 12. The results are outlined below:

(a) IR20 irrigated vs rainfed, 1972 wet season. Grain losses increased with a delay in harvest for both irrigated and rainfed crops. The rainfed crop exhibited higher grain losses than the irrigated crop. A partial explanation appears to be that maturity is delayed in the irrigated area and hastened in the rainfed area. This is evidenced by the rapid decline in the moisture content for the rainfed as contrasted to the irrigated crop during the wet season.

(b) Irrigated IR20 wet season vs dry season. Significant differences occurred in grain losses between seasons for irrigated IR20 (fig. 12). The wet season crop prolonged maturity whereas the length of the dry season crop was shortened. This hastening of crop maturity in the dry season resulted in a rapid reduction in the grain moisture content. As a result, the pedicels (fig. 13) became brittle, and excessive shattering resulted. In addition, shattering was hastened by the presence of strong winds at the time of the dry season harvest.

(c) Grain loss among irrigated rice varieties, 1973 dry season. For the dry season crop, IR253 and C4-63G had the highest grain losses, followed by IR20 and IR24, respectively (fig. 14). This loss can be explained by the shattering characteristics of the varieties. IR253 and C4-63G shatter quite easily while IR20 and IR24 are medium-shattering types.

Milling quality. Tables 5 and 6 show the milling recovery of the samples for each variety taken during the 1972 wet and 1973 dry seasons.

(a) IR20 irrigated and rainfed using two drying methods. Comparing the IR20 irrigated vs rainfed crop (tables 5 and 6 and fig. 15), the former gave significantly higher head and total milled rice for both solar and mechanically dried samples. Differences between percent head and total milled rice were insignificant within harvest dates but significant between harvest dates. Head rice recovery was higher at the approximate date of maturity than at the first and third harvest dates. This can be explained by the fully ripened grains at harvest while early and late harvestings produced greater quantities of chalky and sunchecked kernels[1/], respectively. Total rice recovery increased from the first to the last harvest dates as the grains reached full development.

Head rice recovery for the dry season harvest differed significantly between harvest dates and within harvest dates for the solar and mechanically dried samples (table 5 and fig. 15). This can be explained by the very intense solar radiation available for solar drying during the dry season. A significantly shorter time was required to dry the grains to the required 14 percent moisture content at this time of year than experienced during the wet season. The difference in the rate of solar drying between the dry and wet seasons may have caused the observed differences in milling recoveries between seasons. Total milled rice gave comparatively the same yields.

(b) Different irrigated rice varieties, using two drying methods. Table 5 and fig. 16 show milling recoveries using two alternative drying methods. All mechanically dried samples gave significantly higher head rice recoveries than sun-dried samples. In all the varieties tested, it was found that total milled rice yields increased only slightly up to the third harvest date and decreased on the last harvest date. The greater breakage on the last harvest date may have resulted from environmental conditions causing alternate wetting and drying of the grains with subsequent sunchecking.

Among varieties and between drying methods, C4-63G gave the highest percentage of head rice, followed by IR24, IR20 and IR253 in that order, respectively. This shows the superiority of the first three varieties (non-chalky) over the latter which is a characteristically chalky variety.

Total rice recovery among varieties (table 6 and fig. 17) was highest for IR20. This was followed by C4-63G, IR253 and IR24 in that order. These trends in total rice recovery among varieties have a positive correlation with the field yield at harvest, irrespective of drying method used.

1/Sunchecked refers to the fractures which occur in the rice grain as a result of differential expansion between inner and outer layers of the grain caused by temperature gradients.

The moisture content of the paddy grain is a good criterion in determining the optimum time of harvest, irrespective of varieties and dates of heading. As a general rule of thumb, the optimal moisture corresponds to about 20 percent at harvest. This figure will be conditioned by variety and the crop handling system available to the farmer (fig. 18).

A close correlation was found to exist between the date of harvest and milling recovery. Both early and late harvests resulted in higher percentage of broken grains.

These results are in consonance with the general principle that harvesting should begin as early as possible after plants reach the approximate date of maturity. Both early and late harvesting resulted in lower head rice yields.

These data are being further statistically analyzed to determine more precisely the functional relationships involved and to calculate the economic benefits ascribable to optimal timing of the harvesting, threshing and drying operations. These results will be combined with additional information being gathered on losses which occur in the handling and threshing processes (fig. 18). From this analysis it will be possible to make a more comprehensive assessment of the economic and technical benefits to be derived from improving elements of traditional harvesting-threshing systems.

Large tractor contract operations

The objectives of the present study were fourfold. First, to determine the pattern of tractor ownership and use in Nueva Ecija, Central Luzon. Included in this objective is an assessment of the level of technical efficiency at which machines are operated, a review of the tasks which they perform and an evaluation of machine reliability under conditions of lowland rice production. Secondly, to measure the level of profitability achieved under a system of subcontract hire. Thirdly, to assess the potential for development of a locally manufactured tractor which fits the specific needs and requirements of the rice-producing farmers included in the survey. Fourth, to determine the potential impact of large equipment use on labor displacement.

The study encompassed a sample of 142 tractor owners in Nueva Ecija. This represents an estimated 30 percent of the total tractor population in this province. The sample was drawn from dealership records of all major equipment suppliers located in the province. Tractors were stratified on the basis of horsepower into three major groupings (Table 7). Within each size classification, a random selection of owners was drawn from dealer records of tractor owners in the area.

An important aspect of the study was to determine the ownership characteristics of tractors used for contract hire. Table 7 outlines the

ownership profile of contract operators in the sample. Our sample revealed that the most prevalent type of tractor-owner was the farmer who owned and operated his own holding. Of the 142 tractors included in the survey, 123 were owned by farmers in this classification. Surprisingly, only 10 machines included in the sample were owned by custom service operators with no land of their own. This indicates that farmers consider the utility of the machine on their own holdings as well as the return or income which the machine generates from custom operations. As will be pointed out in a subsequent section, it also indicates that land ownership is an important prerequisite for obtaining a tractor. This is largely the result of the collateral provisions of credit programs now available for purchase of farm equipment.

There appear to be few discernible differences in owner characteristics by horsepower size. The single exception appears to be in the percentage of farmers who make their tractors available for contract work. Smaller tractors are not used as widely for custom work as larger units. The larger average size of holding in the light horsepower category may mean that the smaller units are used more extensively on the farmer's own holding. The lower effective field capacity of these units also means that they have a lower capacity for contract work than larger units. The lighter units also tend to be older and were purchased at a time when contract services were not as prevalent as they are at the present.

Most tractors appear to be owned by individual entrepreneurs and there is little or no apparent concentration of ownership among large landlords. This observation tends to minimize opportunities for landlords to force tenants to use tractor-hire services. Evidence from the current survey tends to support the view that the choice of contract hire services is dictated by the widespread availability of this service at a cost which is competitive with other alternatives such as carabao or hand-tractor services.

Farm characteristics

The size of holding and employment levels on each farm were also recorded (table 7). It has been hypothesized that there might be a positive relationship between farm size and size of power unit. The evidence from the survey indicates a negative correlation between farm size and tractor size. This is, however, subject to further interpretation. One plausible reason for this seemingly perverse relationship is found in the timing of the survey. Data was gathered only a few weeks after the promulgation of the Land Reform Act. There was a distinct impression generated by many respondents that they were under-reporting the size of their holdings to avoid publicizing the actual size of their holdings. Another possible reason for the negative relationship lies in the fact that many of the larger tractors were bought very recently during a period when financial and credit policies were more liberal allowing easier purchase under less stringent collateral requirements. This afforded smaller farmers

the opportunity to invest in larger tractor units. Also, given the small number of observations in the light tractor classification, it is doubtful whether a statistically significant relationship could be formed between tractor size and farm area. Considering the amount of double-cropped irrigated land on farms owning a tractor, the average effective crop area is approximately 40 hectares for all tractor sizes. This farm size is significantly larger than the mean average holding in Nueva Ecija which census data indicate to be 3.4 hectares.

Technical and financial characteristics

Data presented in Table 8 indicate that average tractor size has increased significantly in recent years. Light tractors have an average age of slightly more than 9 years while units falling in the heavy tractor class average slightly less than 3-1/2 years. Medium tractor units have an age and horsepower intermediate between those of the light and heavy classifications. An explanation of this phenomenon is difficult to develop. Information acquired from farmers indicates that they prefer heavier units for some tasks such as land preparation, although our analysis of breakdowns and reliability coefficients indicates that larger units tend to be more sophisticated and susceptible to breakdowns than do the lighter and older units. A more plausible explanation for the increase in tractor size appears to be the range of equipment which is available from the major equipment manufacturers. The unit size of imported tractors has increased significantly over the recent past. Tractors which are sold in the Philippine market reflect the technology which is available from the developed countries.1/

Initial investment requirements are slightly more than double for heavy as contrasted to light units. Also, the price per rated horsepower for lighter units is less (₱533/hp) as contrasted to heavy units (₱664/hp). While the price differential per horsepower between light and heavy units reflects the difference in ages between the light and heavy classifications, it also requires some rethinking regarding the usual assumption that there are scale economies in the purchase of large vs small agricultural tractor units.2/

1/This phenomenon is a reflection of the widening technological gap between developed and developing nations. As farm sizes increase in the western countries we will continue to see equipment grow larger, more sophisticated and more costly. Until local farm equipment industries can be established in the developing countries to provide equipment which is in consonance with local needs, this technology will remain the principal source of mechanized farm power in the developing countries.

2/Note that the higher price for heavy tractors does not include the more recent effect of devaluation of the Philippine peso which occurred in February 1970. The average age of the heavier units indicates that most were purchased prior to devaluation. This more recent phenomenon has tended to increase the prices of farm tractors by up to 35 percent.

At the time the majority of the light tractor units were acquired, about 40 percent of the purchases were for cash. There has been a dramatic change in this pattern of acquisition in recent years. In the medium size classification, 15 percent of the units were purchased for cash and only 10 percent of the heavier units. While the higher initial investment requirements for larger tractors obviously makes installment purchases necessary, it was the advent of the World Bank Credit Program in 1966-67 which provided the necessary resources to fund large numbers of tractor sales. Over 80 percent of the larger tractors in the survey have been purchased under the IBRD program. This is in contrast to only 33 percent for the light tractor units. The IBRD program is by far the most significant source of credit for acquisition of farm machinery. Commercial banking institutions such as the Development Bank of the Philippines and the Philippine National Bank have made only a minor contribution to the financing of tractor purchases.

All tractor units included in the survey were diesel-powered and were equipped with a common complement of implements which usually included a disc harrow, disc plow and rotavator. There was a noticeable trend in the units purchased more recently (larger units) to include more sophisticated features such as power steering and a wider selection of speeds. There was little evidence that any of the tractor operators used the full range of speeds found on the larger tractor units. This again reflects the introduction of a technology developed for a different set of economic and technical circumstances than is found in the Philippines.

Table 9 enumerates the type and number of implements employed by tractors in each size classification. As is noted in a later section dealing with use patterns, many of these implements were considered redundant and reflect the tendency of dealers to sell tractor units as complete packages and farmers to accept them without a complete understanding or knowledge of the application of the implements. This is particularly obvious in the case of the disc harrows, peg-tooth harrows and, to a lesser degree, disc plows. In some cases, these implements were not employed for any of the operations performed by tractor operators.

Tractor use patterns

Tractor use is examined in detail in Table 10. Tractors usually operated 11 hours per day, and were busy about six months per year. Annual hours of operation were about 1400. To accomplish this level of output, the tractors travelled a distance of 80 km from home to do custom work (table 11). Note that custom work accounts for 75 percent of the total operating time during the wet season. In the dry season the machines are used more extensively for contract hire, devoting as much as 84 percent of their operating time on customers' fields (fig. 19). The disruption in the services of the irrigation facilities in the province has forced the tractor owners to seek contracts in more distant locations. Some owners reported travelling as much as 300 km from home seeking tractor work. Custom

threshing is also normally performed in the wet season and may partially account for the relatively greater amount of off-farm work during that period.

These observations have some important implications. The first relates to the rapid growth of tractor numbers in the area, and consequently to the profitability of the tractor contractor system. As more and more farmers buy their own machines, the area available for custom work is significantly reduced, thereby inducing more price competition for available work. This may eventually lead to more and more operators moving farther from their bases for tractor work. The farther they travel, however, the greater the unproductive time spent in moving, which severely reduces the time available for productive work.1/ More extensive travel will also result in an increase in the cost of services. At present the tractors are used almost exclusively for land preparation. Other employment opportunities for the machines must be found if an economic level of operation is to be maintained. Possibilities for intensified utilization appear to exist in the area of threshing and transport.

Machine performance is one of the most important considerations in machinery selection. Performance, in the present analysis, is limited to measurement of field capacity as reported by the operators interviewed. The performance data shown in Table 12 indicate that about the same amount of time is required to either plow a unit of land in a dry state or rotavate it under flooded conditions. Note that it costs about half as much to have a land plowed as to have it rotavated. The more favorable conditions encountered in dry tillage may account for this widely divergent cost structure.

Tractor breakdowns

A major concern related to mechanization is the reliability of farm equipment. The issue is particularly crucial in the tropics where machines are often subjected to working conditions for which they were not designed.

Reliability can be expressed as a probability, and is a measure of the chances that a machine will successfully perform its job without failure. Since farmers are understandably concerned about the chance of failure, the survey data are expressed as breakdown probabilities. Breakdowns due to wear were excluded since wear is a normal and expected deterioration of equipment. The probability of a breakdown is derived by

---

1/ For a very interesting exposition of this issue, the interested reader is referred to: Chancellor, W.J., "Survey of tractor contractor operations in Thailand and Malaysia". Agricultural Engineering Dept., University of California, Davis. August 1970. pp. 119-142.

dividing the number of breakdowns reported by the total number of machines in each class. Figure 20, for example, shows that of 26 one-year-old tractors, 14 of them reported breakdowns. The ratio of 14/26 defines the probability to be 0.54 that any tractor will suffer a breakdown during its first year of operation. This increases to 0.93 percent in the second year and 1.00 in the six year, after which it drops back to 0.67 percent. This may indicate that major overhauls are done at approximately the end of the sixth year. Furthermore, the figures indicate that such overhauls are done at shorter intervals after the sixth year. It is not clear whether this is due to an early discarding of unreliable machines or that only the lightly used machines lasted long enough to provide the data gathered in this study.

Some tractor components are more susceptible to breakdowns than others. Figure 21 shows the distribution of breakdowns for different tractor components. Hydraulic system failures comprise more than 50 percent of the total. Evidence seems to indicate the major reason for these breakdowns is the failure of seals to effectively prevent penetration of soil, water and other foreign material into the operating systems. The extremely dirty conditions encountered in wetland tillage undoubtedly contribute to these failures.

Table 13 shows the days of downtime associated with various tractor component breakdowns. Note the considerable differences in the amount of downtime. The more complex systems apparently require considerably more time to repair. In several instances, the relatively extensive downtimes may be partially due to the unavailability of replacement parts.

Tractor costs

The hourly costs of operation of each power source were translated into the cost of tilling one hectare. The results of this calculation are presented in fig. 22. It was assumed that the tractors would be used principally for rotavation. The graph clearly indicates that at current market prices, heavy tractors are the most expensive form of power used in land preparation. Given the present price structure and farm size distribution, it is evident that investments in the light and medium tractors are justified. One would, therefore, expect to observe a concentration of farmer interest in these sizes.

Contract services and employment

There is an inverse relationship between tractor size and the perceived amount of animal power displaced by mechanical power. The lighter tractor owners felt that their units replaced more animal labor than did heavier tractor operators. Again, this reflects the pattern of use of the machines. In the case of light tractor units which are used on the tractor-owner's farm, there is more opportunity to use the machine for complete land preparation. In the case of a subcontractor, one or two passes with

the rotavator to perform basic tillage is commonly followed by final harrowing and leveling using carabao power. The result is that the contract operator replaces carabao power only in the initial plowing operation but does not replace the requirement for animals in final harrowing and leveling.

We made no attempt in this study to determine the additional employment which may have been generated through an expansion in repair shop facilities and other service industries allied with tractor services. Chancellor in his study of tractor operations in Malaysia and Thailand indicates that the supporting industries provide substantial employment opportunities which are nearly equivalent in magnitude to employment which is displaced at the farm level through introduction of mechanization.

For the range of tasks being performed by tractors in this study, there is no evidence indicating undue displacement of labor. Conversely, there is no evidence to indicate that labor which might be released by using contract services is applied to activities providing expanded income opportunities.

Design parameters

It is possible to draw some rough conclusions relating to potential design innovations in the area of four-wheel tractor development. Based on the information regarding technical performance of the machines, it is evident that smaller tractors seem to have somewhat more mobility and a higher level of field efficiency than larger units. This may partially result from the relatively small plot sizes encountered in the survey area. Also, the economic calculations indicate that the light and medium units provide higher rates of return on invested resources than larger units This is largely due to the higher initial investment cost ascribed to the larger units and the recent increase in cost of these units. A number of details relating to specific design features can be synthesized from the tables describing the reliability of individual component parts which are susceptible to high rates of replacement and repair on existing machines.

A large element of uncertainty in establishing a set of design parameters is the ability of the engineer to create a machine within the parameter boundaries which is comparable in performance with existing designs, but offers substantial cost advantages.

Economics of processing systems

Report No. 15 contains a normative analysis of the ownership and operational costs of typical rice mills in the Philippines. During the current reporting period we have assembled data describing the regional distribution of mill type and capacity in the Philippines. This is preliminary preparation for the implementation of a three-phase field survey

of the rice processing industry to determine the technical and economic factors which influence the selection of mill size, location, and choice of milling technology.

The questionnaires, sample frame and personnel are being finalized to enable the first two phases of the study to be undertaken during the current wet season harvest beginning in September and October 1973. The first phase consists of a farm level survey to determine farmers' attitudes and preferences for milling services. The sample for this phase of the study will be drawn in conjunction with the selection of a stratified sample of rice mills. Farmers will be chosen for their proximity to the mills which will be included in the second phase of the study. The second stage will consist of an analysis of rice mills, with particular emphasis on the financial and economic elements of their ownership and operation.

Sampling areas have been selected in Central Luzon, Southern Tagalog, and Bicol. These represent three of the major rice-growing areas in the Philippines and provide sufficient variation in the composition the sample to allow meaningful comparisons.

During the current reporting period, the project participated with the Bureau of Agricultural Economics, Government of the Philippines, in a study of approximately 1200 rice mills throughout the country. This study was an initial attempt to gather information on the economics and engineering aspects of the processing industry.

A major difficulty encountered during the present period is the shortage of rice passing into commercial channels for processing and distribution. It is difficult to make a realistic assessment of the operational characteristics of rice mills when they are operated at very low utilization levels. In addition, farmers are experiencing an abnormal market for their product which may bias their response to questions related to their marketable surplus and their need for milling services.

Small scale metal industry study

During the reporting period, plans were finalized to undertake a study of the small and medium scale metal fabricating industry in the Philippines. Assistance has been obtained from the Board of Investments (Government of the Philippines), Metals Industry Research and Development Center (MIRDC), Institute for Small Scale Industries, and the East-West Center, University of Hawaii.

The objective of this study is to examine in considerable detail the economic, financial and technical characteristics of the small scale metal industry in the Philippines. This will be accomplished in two stages. The first stage will consist of a national sample survey consisting of

observations drawn from the metropolitan Manila area and three or four provincial centers. Firms in the sample will be stratified on the basis of geographic location and size, expressed in terms of number of employees and capital investment per employee. A questionnaire for this survey is being completed and plans are to begin the initial survey the first week of September 1973.

The second phase of the study will involve a limited series of in-depth case studies of firms producing agricultural equipment. We have elected to examine in detail firms which are currently producing power tillers in the Philippines, both those utilizing the original IRRI design and others producing modifications or copies of that design. As in the more general study, the sample will be drawn from both the Manila metropolitan area and a limited number of provincial centers.

Thailand engine manufacturing case study

The project has supported the planning and implementation of graduate research on an in-depth case study of a small internal combustion engine manufacturing company located in Chachiengsao, Thailand. The objectives of this study were to examine the manufacturing processes used in the production of an indigenously conceived and executed two-stroke engine design. The results of this study indicate that the low costs of production for this firm result largely from the low capital investments and labor costs required to operate the manufacturing plant. These in turn result from use of indigenously produced machine tools for over 80 percent of all operations in the production and assembly of the engines. The foreign exchange component of engines produced at this plant is estimated to be 40 to 50 percent of the f.o.b. plant value. This seemingly high foreign exchange component stems from the low cost charged for the product and the relatively expensive nature of the imported components used in the design. The plant is now producing 800 to 1000 engines per month and has plans to expand production to 3000 engines per month. Investment credit has been a major constraint to expansion of the firm in the past, but is being overcome through a direct affiliation with one of the large commercial banks in Thailand.

Production technology is very labor-intensive, employing about 200 local unskilled workers, principally women. There are about 20 skilled workers involved in the foundry and machine shop operations.

The three engine models produced at this factory sell for approximately 70 percent of the cost of comparable imported machines. The details of this study are contained in the report cited in the list of publications and papers.

SUBCONTRACT, DEVELOPMENT, EXTENSION AND TRAINING ACTIVITIES

Three new subcontract agreements were signed during the reporting period. Agreements in India and Pakistan were revised and reassigned to private firms. Krishi Engines Limited of Hyderabad has assumed the responsibility for testing work in India and the Lahore Engineering and Foundry Company of Lahore has undertaken evaluation and demonstration work in Pakistan. A new agreement was signed in Vietnam with the Vietnam Agricultural Machinery Company (VIKYNO), a company currently producing and marketing a range of agricultural machinery. The complete enumeration of subcontractors is as follows:

Country	Cooperating Agency	Address
India	Krishi Engines Ltd. Mr. V. R. Reddy, Managing Director	A-7 Unit, Industrial Estate Sanath Nagar, Hyderabad
Indonesia	Directorate of Agricultural Techniques Ir. Soedharso Rawidjo, Director	Pasar Minggu, Djakarta
Korea	Institute of Agricultural Engineering and Utilization Dr. Sung Kum Han, Director	Suwon
Malaysia	Malaysian Agricultural Research and Development Institute (MARDI) Dr. Anuwar bin Mahmud, Director	Jalan Swettenham, Kuala Lumpur
Pakistan	Lahore Engineering and Foundry Limited Mr. D.M. Khan, Managing Director	Ambassador Hotel, Davis Road Lahore
Philippines	Nueva Ecija Land Reform Integrated Development Project Dr. Basilio de los Reyes, Director	Bitas, Cabanatuan City
Sri Lanka	Browns Group Industries Limited Mr. S.N.N. Perera, Manager, Landmaster Dept.	481 Darley Road, Colombo 10

Country	Cooperating Agency	Address
Taiwan	Joint Commission on Rural Reconstruction (JCRR) Dr. T. H. Shen, Chairman	37 Nan Hai Road, Taipei 107
Thailand	Engineering Division, Rice Department, Ministry of Agriculture Dr. Bhakdi Lusananda, Director-General	Bangkok 9
Vietnam	Vietnam Agricultural Machinery Company Mr. Vo Van Nhung, General Manager	422 Tran Hung Dao, Saigon

Extension activities in the Philippines continue to be centered with the Nueva Ecija Land Reform Development Project in Central Luzon. A number of power tillers were added to the list of equipment which are being tested in this area. In addition, at the invitation of the Board of Investments (Government of the Philippines), a series of visits were made to Cebu City, Davao City and other locations in the Southern Philippines to assist in the establishment of small-scale manufacturing associations in these areas. The associations are to employ the IRRI tiller and other IRRI designs as their initial product efforts. Work with the association in Davao, which consists of 28 small- and medium-scale metal manufacturers and machine shops, has resulted in the production of one prototype tiller This association intends to begin commercial production of the IRRI tiller at the completion of tests on their prototype machine.

WORK PLAN

JULY 1, 1973 TO JUNE 30, 1974

DESIGN AND DEVELOPMENT

Herbicide applicator

Further field studies will evaluate the effectiveness of different herbicides when applied with the contact applicator. A crop of upland rice will be planted during the rainy season for this purpose.

Windmill studies

A Savonius windmill will be mounted to a lowbed trailer for instrumentation. Torque sensors will be installed to determine the power generated by the windmill at different wind speeds.

Bellows pump

The bellows assembly of the lowlift pump will be redesigned to use rubber or rubberized material.

Direct seeder for upland rice

Work will be continued on the development of a low-cost upland seeder which can be employed for a wide range of crops.

8-14 hp power tiller

Field tests of the first prototype have defined several required design improvements. Field tests will continue under varying soil and ground cover conditions. A second prototype will be fabricated with all design improvements and field tested. If test results are satisfactory, the design will be released to two or three local manufacturers for limited production and further field evaluation.

Axial-flow thresher

Production models from four local manufacturers will be tested. If initial test results are satisfactory, additional machines will be obtained for extended evaluation and demonstration in the Philippines and other Asian countries.

PTO thresher

Modifications have increased output and improved grain-straw separation to a satisfactory level. Additional testing and modifications are required to improve output cleanliness. When we obtain a satisfactory total machine performance level, the design will be released to local manufacturers for trial production.

Stripper harvester

Field tests with the second prototype gave good performance except for losses at the outside gathering points and limited mobility in soft fields. A third prototype is being fabricated with a six-row head and a self-contained power transport unit. This machine will be field tested when completed.

Effect of power source and tillage method on a compacted soil layer

A field study of the effect of four power source-tillage methods on the compacted soil layer was started. This study will attempt to determine whether large tractors, large tillers, small tillers or the carabao deepen the compacted soil layer in an irrigated, continuous rice production system.

DRYING AND PROCESSING EQUIPMENT

Heated-sand dryer

The improved unit will undergo further testing and evaluation. If performance is satisfactory, a few units will be ordered from local manufacturers. These will be shipped to countries where parboiling is commonly practiced for test and evaluation. In addition, the design will be modified to accept a rice hull furnace and other low-cost fuels.

Rice milling

Modifications made on the Engleberg mill will be tested and evaluated to establish their relative contribution to improvement in milling performance. If performance is satisfactory, field testing and possible release to manufacturers will be made.

Test will continue on various types of hullers and polishers that look promising for village and community level operation. Work to develop new concepts of milling rice will also be explored, including the possibilities of a centrifugal hull polisher which can be fabricated in the less developed countries.

Direct-flame dryer

A direct-flame dryer designed to be operated in conjunction with an air dryer will be developed to reduce total drying time.

ECONOMICS OF MECHANIZATION

Grain loss study

Data gathered from the 1972 wet and 1973 dry seasons will be subjected to further statistical analysis to determine the nature of the relationships among grain losses, variety, type of irrigation, date of harvest and the method of drying used. In addition, the information gathered from the field study will be used to assess the economics of grain losses and the potential benefits to be derived from use of improved techniques of harvesting, threshing, drying, handling and milling of rice.

Alternative systems of land preparation

This study is being undertaken to determine the direct yield effects of alternative methods of land preparation on lowland fields. The study will be implemented at four field locations representing a range of soil conditions. Replicated trials using six methods of tillage encompassing a range of mechanization technologies will be examined.

Economics of processing systems

Work on the first two phases of a three-phase field survey will be undertaken during the coming six months. The first phase will be a farm level analysis of farmers' perceptions of the demand for milling services. The second stage will be an economic and financial assessment of two types of rice milling operations. Both of these surveys will be conducted at three regional locations within the Philippines and will involve approximately 180 rice mills and an equal number of farmers. Following completion of this part of the study, an engineering team will undertake replicated sample milling at a limited number of rice mills.

Small and medium scale metal industry study

Field interview activities will be undertaken on a stratified sample of metal fabricating firms located throughout the Philippines. The study will be a joint project involving IRRI, the Metals Industry Research and Development Center, the Board of Investments, the Institute for Small Scale Industries, and the Technology and Development Institute of the East-West Center.

Rice production systems analysis

Data from a number of previous and ongoing studies will be synthesized into a programming system to evaluate the impact of alternative technologies on incomes, labor use profiles, resource utilization and output. The model will be confined to an environment representative of the one type of environmental and institutional situation. The principal objective is to evaluate more precisely the scope for use of improved mechanical technologies in the rice production sequence.

PERSONNEL LIST

Personnel and their respective man-months engaged on the project during the past six months, January 1 to June 30, 1973, and projected requirements, July 1 to December 31, 1973:

Position	Name	Fr: 1- 1-73 To: 6-30-73	Fr: 7- 1-73 To: 12-31-73
Development Engineer & Project Leader	A. U. Khan[a/]	4	-
Agricultural Economist	B. Duff	6	6
Evaluation Engineer	F. Nichols	6	6
Assistant Design Engineer (Design)	J. Policarpio	6	6
Assistant Design Engineer (Processing)	A. Manalo	6	6
Senior Research Assistant (Engineering)	J. Arboleda	6	6
Senior Research Assistant (Engineering)	E. del Rosario	3.5	0
Senior Research Assistant (Engineering)	N. Navasero	6	6
Research Assistant (Economics)	N. Orcino	6	6
Research Assistant (Economics)	Z. Toquero	6	6
Senior Research Assistant (Test & Evaluation)	C. Padolina	6	6
Research Aide (Test & Evaluation)	B. Ramos	6	6
Research Aide (Economics)	B. Samson	6	6
Draftsman	F. Cabrales	6	6
Draftsman	B. Buan	6	6
Secretary	V. Maraan	3	0
Secretary	E. Manalo	2	6
Secretary	C. Jizmundo	6	6
Shop Foreman	S. Gutierrez	6	6
Machinist	Z. Borja	6	6
Machinist	A. Dizon	6	6
Tinsmith	R. Santos	6	6
Tinsmith	E. Dungo	6	6
Welder	A. Barot	6	6
Shop Mechanic	M. Macatangay	6	6
Shop Mechanic	R. Dignadice	6	6
Shop Mechanic	P. de Mesa	6	6
Laborer (Shop helper)	M. Castro	6	6
Laborer (Shop helper)	E. Macatangay	6	6
Laborer (Student assistant)	L. Lumang	6	6

a/ Three-fourths time charged to the Contract. On one-year study leave.

Table 1. Comparative milling results using a modified Engleberg steel huller test mill and two commercial huller mills.[a]

Test number[b]	Recovery		Mill rate	Blade adjustment		Grain temperature
	Total (%)	Head (%)	(kg/h)	In (mm)	Out (mm)	(°C)
I (a, b, c, d)	69.33	45.10	265	6.4	7.4	47.22
II (a, b, d)	67.00	33.12	291	2.5	8.1	50.00
III (a, b)	67.44	32.99	294	6.2	6.2	46.11
IV (Original)	68.00	34.04	308	4.6	4.6	43.33
V (a)	67.84	34.49	287	4.6	4.6	46.11
VI (a, d)	68.44	42.75	238	3.5	5.8	51.67
VII (Outside)	62.78	34.11	398	4.8	6.9	46.67
VIII (Outside)	65.23	34.69	350	-	-	48.89

a/Data represents average of three milling test runs using IR20 with 95% purity and 13% moisture content.

b/Letters in parentheses represent modifications on test mills:

a - Rice outlet changed from slide to weight-loaded gate.
b - Cylinder with two ribs and continuous spiral screw.
c - Lining insert -- a thin metal sheet placed beneath the top cover with four ribs slanted 15°, a full-length straight rib opposite huller blade, and inlet restriction.
d - Two strips with full-length ribs mounted on perforated cylinder.

Table 2. Results from test of commercial prototype multipass rice dryer.

Date of test	April 3, 1973
Rice variety	C-4
Weight of rice in test, kg	2162
Moisture content:	
Wet grain, %	22.14
Dried grain, %	11.02
Drying time, h	12
Evaporation, kg/h	24.25
Total water removed	291
Fuel consumption:	
Kerosene, liter/h	2.79
Electricity, kw-h/h	0.66
Fuel used per kg of water removed:	
Kerosene, liter	0.12
Electricity, kw-h	0.03
Drying air temperature	140
Ambient air condition:	
Dry bulb, °C (ave.)	27.70 (range 24.44-33.33)
RH, % (ave.)	30.0 (range 18.89-37.78)
Percent head grain:	
Artificial drying	65.77
Air drying (control)	67.84

Table 3. Rough rice yield of 4 rice varieties harvested on different harvest dates, Gapan, Nueva Ecija (wet, 1972 and dry, 1973).

Variety	Type of irrigation	Date of harvest[1] -6 M. C. at harvest %	-6 Rough rice yield (kg/ha)	0 (Harvest) M. C. at harvest %	0 (Harvest) Rough rice yield (kg/ha)	+6 M. C. at harvest %	+6 Rough rice yield (kg/ha)
		Wet season[2]					
IR20	Irrigated	23.4	3,383	20.8	3,499	18.0	3,455
	Rainfed	23.7	2,119	19.5	2,143	16.8	2,106

Variety	Type of irrigation	-5 M. C. at harvest %	-5 Rough rice yield (kg/ha)	0 M. C. at harvest %	0 Rough rice yield (kg/ha)	+5 M. C. at harvest %	+5 Rough rice yield (kg/ha)	+10 M. C. at harvest %	+10 Rough rice yield (kg/ha)
				Dry season[3]					
IR20	Irrigated	22.4	3,900	20.0	4,312	16.6	3,619	15.3	3,555
IR24	Irrigated	23.1	2,981	20.1	2,915	18.2	2,656	15.6	2,345
C4-63G	Irrigated	23.0	3,596	20.6	3,631	16.6	3,556	15.4	3,278
IR253	Irrigated	23.2	3,332	20.5	3,389	18.7	3,203	16.3	3,171

[1] Date of harvest refers to number of days before or after recommended harvest date.
[2] IR20 Irrigated - 31 observations; Rainfed - 19 observations.
[3] IR20, 31 observations; IR24, 8 observations; C4-63G, 8 observations; IR253, 7 observations.

Table 4. Grain loss of 4 rice varieties harvested at different harvest dates, Gapan, Nueva Ecija (wet, 1972 and dry, 1973).

Variety	Type of irrigation	Treatment (Date of harvest) -6 M. C. at harvest %	-6 Grain loss (kg/ha)	0 (Harvest) M. C. at harvest %	0 Grain loss (kg/ha)	+6 M. C. at harvest %	+6 Grain loss (kg/ha)
Wet Season							
IR 20	Irrigated	23.4	15.0 (0.45%)1/	20.8	27.5 (0.80%)	18.0	44.6 (1.30%)
	Rainfed	23.7	8.4 (0.40%)	19.5	20.8 (0.97%)	16.8	34.8 (1.6[illegible]%)

Variety	Type of irrigation	Treatment (Date of harvest) -5 M. C. at harvest %	-5 Grain loss (kg/ha)	0 M. C. at harvest %	0 Grain loss (kg/ha)	+5 M. C. at harvest %	+5 Grain loss (kg/ha)	+10 M. C. at harvest %	+10 Grain loss (kg/ha)
Dry Season									
IR 2[illegible]	Irrigated	22.4	38.8 (1.00%)	20.0	61.7 (1.43%)	16.6	74.1 (2.06%)	15.3	74.0 (2.08%)
IR 24	Irrigated	23.1	23.6 (0.79%)	20.1	37.0 (1.27%)	18.2	46.0 (1.73%)	15.6	46.8 (2.00%)
C4-63	Irrigated	23.0	58.9 (1.64%)	20.6	78.9 (2.17%)	16.6	74.6 (2.10%)	15.4	87.9 (2.68%)
IR 253	Irrigated	23.2	82.3 (2.47%)	2[illegible].5	102.6 (3.[illegible]%)	18.7	102.3 (3.19%)	16.3	128.8 (4.06%)

1/ Figures in parentheses indicate grain loss as a percent of total grain yield.

Table 5. Percent milling recovery of four rice varieties at different harvest dates using two drying methods, Gapan, Nueva Ecija (wet, 1972 and dry, 1973).

Variety	Irrigation	Drying method	Date of harvest 1/							
			-6		0 (Harvest)		+6			
			Head rice	Total milled rice	Head rice	Total milled rice	Head rice	Total milled rice		
			Wet season							
IR20	Irrigated	Solar	52.0	67.6	54.7	69.5	52.7	70.2		
		Mechanical	51.2	67.6	55.0	69.8	52.7	70.2		
	Rainfed	Solar	46.4	65.1	52.1	68.0	47.6	68.2		
		Mechanical	48.2	66.3	52.9	68.0	48.0	68.7		
			-5		0		+5		+10	
			Head rice	Total milled rice	Head rice	Total milled rice	Head rice	Total milled rice	Head rice	Total milled rice
			Dry season							
IR20	Irrigated	Solar	41.8	67.0	45.5	69.2	39.8	69.5	32.2	68.4
		Mechanical	45.8	67.6	48.8	67.2	41.6	69.0	33.1	68.6
IR24	Irrigated	Solar	42.2	68.7	48.8	69.2	46.0	68.9	35.9	67.6
		Mechanical	48.8	67.8	54.6	69.0	48.4	68.0	36.9	66.0
C4-63	Irrigated	Solar	48.9	68.1	54.4	69.7	54.0	70.1	50.6	69.3
		Mechanical	52.3	67.2	56.3	68.9	55.0	69.1	50.7	68.9
IR253	Irrigated	Solar	21.5	64.9	36.0	68.3	30.9	68.3	19.1	66.9
		Mechanical	35.6	62.9	43.0	68.8	38.4	68.3	27.4	67.1

1/ Date of harvest refers to number of days before or after recommended harvest date.

Table 6. Total rice recovery of four rice varieties at different harvest dates using two drying methods, Gapan, Nueva Ecija (wet, 1972 and dry, 1972).

Variety	Irrigation	Drying method	Date of harvest -6 Total milled rice (kg/ha)	0 Total milled rice (kg/ha)	+6 Total milled rice (kg/ha)
			Wet season		
IR20	Irrigated	Solar	2293	2427	2428
		Mechanical	2282	2449	2418
	Rainfed	Solar	1377	1457	1432
		Mechanical	1399	1457	1453

Variety	Irrigation	Drying method	-5 Total milled rice (kg/ha)	0 Total milled rice (kg/ha)	+5 Total milled rice (kg/ha)	+10 Total milled rice (kg/ha)
			Dry season			
IR20	Irrigated	Solar	2614	2998	2516	2437
		Mechanical	2577	2887	2499	2454
IR24	Irrigated	Solar	2057	2011	1832	1574
		Mechanical	2027	2011	1806	1547
C4-63	Irrigated	Solar	2455	2541	2489	2261
		Mechanical	2409	2505	2453	2261
IR253	Irrigated	Solar	2165	2304	2178	2124
		Mechanical	2099	2338	2178	2124

Table 7. Tractor ownership patterns, Nueva Ecija, Philippines, 1972.

Item	Horsepower Class*			All Classes
	Light[a]	Medium[b]	Heavy[c]	
	Tractor Owner Characteristics			
Farmer	14 (57)[d]	49 (73)	62 (87)	125 (78)
Owner-operator	14	48	61	123
Tenant	-	1	-	1
Lessee	-	-	1	1
Custom service operator	-	4	6	10
Landlord	1	6	-	7
	Farm Characteristics			
Average size (ha)	36	24	29	28
Area double-cropped (%)	39	39	43	41
Irrigation (%)				
Rain	40	27	22	26
Canal	44	52	57	54
Pump	16	21	21	20
Employment	6	3	6	5
Farm laborers	4	1	3	2
Tractor drivers	2	2	3	3

*Light tractors are below 50 hp, below 4000 lbs. Medium tractors are from 50-65 hp and weigh 4000-4999 lbs. Heavy tractors are above 65 hp and weigh 5000 lbs. or more.

a/15 observations
b/59 observations
c/68 observations
d/Percent doing custom work

Table 8. Tractor characteristics, Nueva Ecija, Philippines, 1972.

Item	Horsepower Class			All Classes
	Light	Medium	Heavy	
Average age (year)	9.3	4.3	3.4	4.4
Average hp	38.7	58.1	72.0	62.5
Purchase price	20,807.7	29,882.8	47,834.8	34,547.5
Acquisition				
Cash	6(40)*	9(15)	7(10)	22(15)
Installment	9(60	50(85)	61(90)	120(85)
Financing				
IBRD	3(33)	34(68)	50(82)	87(73)
Dealer	2(22)	11(22)	6(10)	20(17)
DBP	3(33)	2(4)	5(8)	10(8)
PNB	1(11)	1(2)	--	2(1)
Other	--	2(4)	--	2(1)
Power steering	-	10(17)	19(28)	29(20)
Speeds available				
8F-2R[a]	4(26)	14(24)	52(76)	70(49)
6F-2R	9(60)	39(66)	14(21)	62(44)
12F-2R	1(7)	4(7)	2(3)	7(5)
5F-1R	1(7)	2(3)	--	3(2)
Fuel type	diesel	diesel	diesel	diesel
Implements commonly included	disc plow disc harrow rotavator	disc plow disc harrow rotavator	rotavator disc plow disc harrow	disc plow disc harrow rotavator

*Numbers in parentheses are percentages.

a/F - forward R-reverse

Table 9. Farm implements owned, 142 tractor owners, Nueva Ecija, Philippines, 1972.

Equipment	Horsepower Class			All Classes
	Light	Medium	Heavy	
	Number reporting			
Disc plow	12(80)*	39(66)	39(57)	90(63)
Rotavator	4(27)	21(36)	50(74)	75(53)
Ara-wheel a/	3(20)	26(44)	13(19)	42(30)
Disc harrow	4(27)	9(15)	15(22)	28(20)
Pegtooth harrow	-	8(14)	3(4)	11(8)
Thresher	-	10(17)	14(20)	24(17)

*Numbers in parentheses are percentages.

a/The "Ara-wheel" is, in most respects, similar to a cage wheel. It is equipped with blades that till the soil as the tractor is driven through the field. Its continuous use in the field, however, promotes the gradual destruction of the hardpan. Farmers are now discontinuing its use.

Table 10. Tractor use patterns, Nueva Ecija, Philippines, 1972.

Item	Horsepower Class			All Classes
	Light	Medium	Heavy	
	Tractor utilization			
Ave. annual use(months)	7.80	5.06	5.90	5.69
Wet season	4.00	2.51	2.81	2.74
Dry season	3.86	2.55	3.09	2.95
Ave. use/month(days)	17.67	22.70	23.49	22.60
Ave. use/day(hours)	10.00	11.26	10.95	10.86
Ave. annual use(hours)	1389	1293	1518	1396
	Tractor use by location and season			
Wet season(days)				
Own farm	22.25(31)*	14.17(25)	16.00(24)	15.56(25)
Off-farm	48.42(69)	42.81(75)	50.00(76)	46.36(75)
Dry season(days)				
Own farm	18.91(28)	8.60(15)	9.40(13)	10.40(16)
Off-farm	49.30(72)	49.28(85)	63.18(87)	56.27(84)
	Percent utilization by operation			
Rotavate	27	24	56	38
Plow/harrow	73	25	23	29
Ara-wheel	-	30	15	20
Thresh	-	21	6	13

*Numbers in parentheses are percentages.

Table 11. Maximum distance travelled to render service, 142 tractors, Nueva Ecija, Philippines, 1972.

Horsepower class	Distance (km)
Light	78.8
Medium	74.6
Heavy	84.7
All classes	80.0

Table 12. Tractor performance characteristics, Nueva Ecija, Philippines, 1972.

Item	Horsepower class			All classes
	Light	Medium	Heavy	
	Hours/hectare[a/]			
Flow[b/]	4.3	3.9	3.6	3.9
Rotavate	6.2	4.3	4.0	4.2
Ara-wheel	-	3.8	2.8	3.5
Fuel consumption (liter/ha)	27.5	29.5	34.3	31.5

a/ One time over.

b/ Dryland.

Table 13. Tractor component breakdown and downtime, Nueva Ecija, Philippines, 1972.

Component	Horsepower class			All classes
	Light	Medium	Heavy	
	Downtime (days)			
Engine[a/]	-	2.0	1.7	1.8
Transmission[b/]	30.0	8.0	-	12.4
Differential and rear axle[c/]	15.0	9.2	23.9	17.9
Steering and front axle[d/]	2.5	6.1	6.5	6.0
Hydraulic[e/]	12.5	11.3	8.5	9.9
Accessories[f/]	-	1.0	1.0	1.0

a/Items included are: piston ring, dynamo, electrical system, engine cylinder head, voltage regulator, injection pump, cylinder head gasket.

b/Items mentioned are: transmission, pinion shaft, spur gear.

c/Rear axle, brake line and lining, brake plates.

d/Front wheel bearings, spindle, steering.

e/Hydraulic pump, hudraulic control valve, seals, clutch pack, pto.

f/Rims, rubber cushion, etc. and implement breakdowns.

Fig. 1 Prototype 7.5 hp diesel powered tiller equipped with a standard three speed automobile transmission.

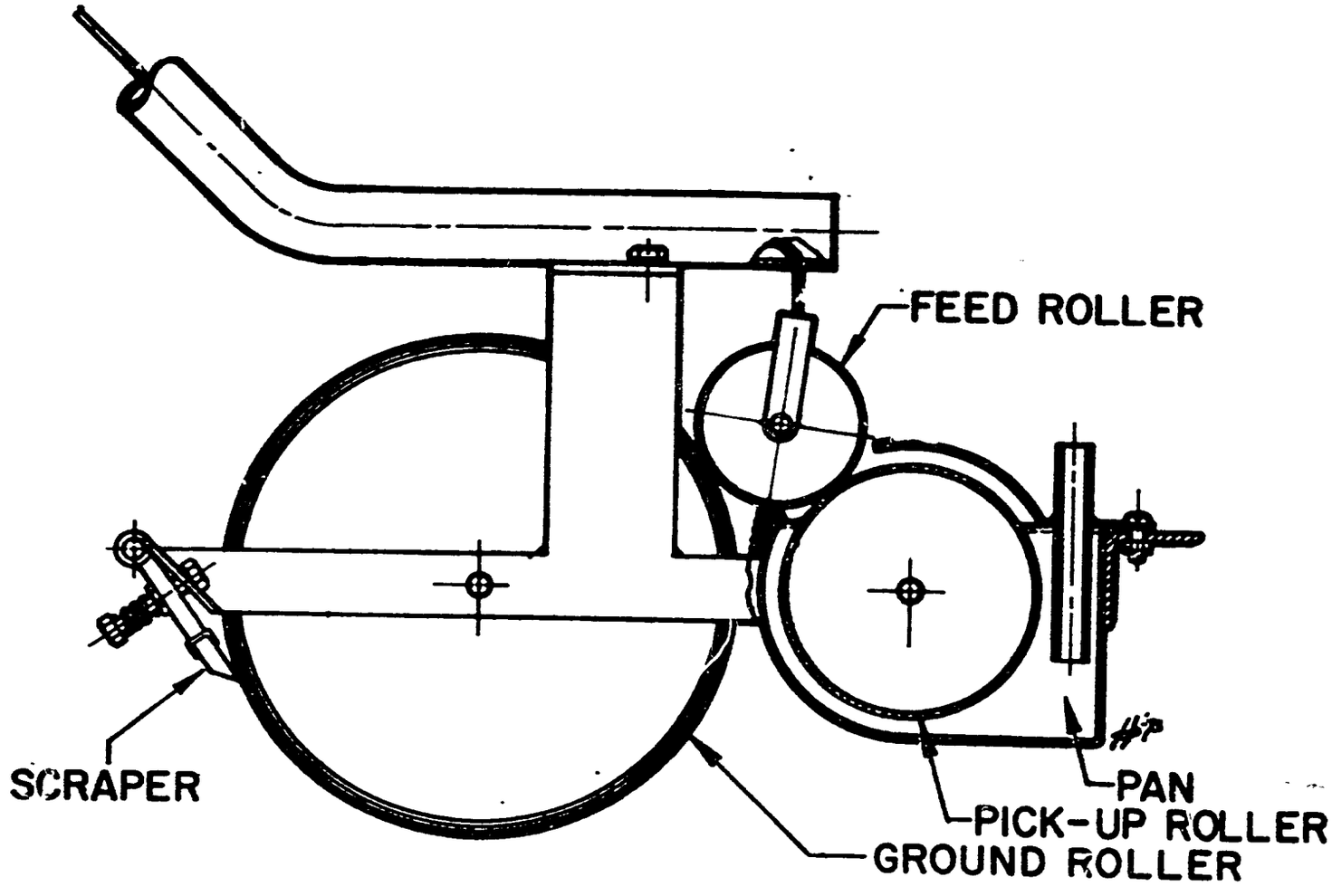

Fig. 2 Schematic drawing of the manual contact herbicide applicator.

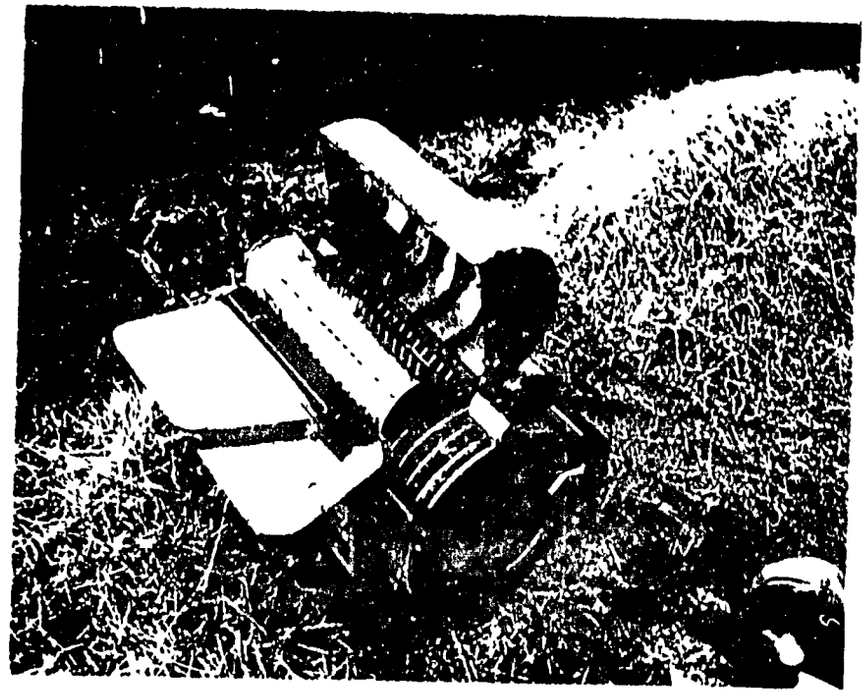

Fig. 3 Final version of the axial-flow thresher released to manufacturers for prototype production.

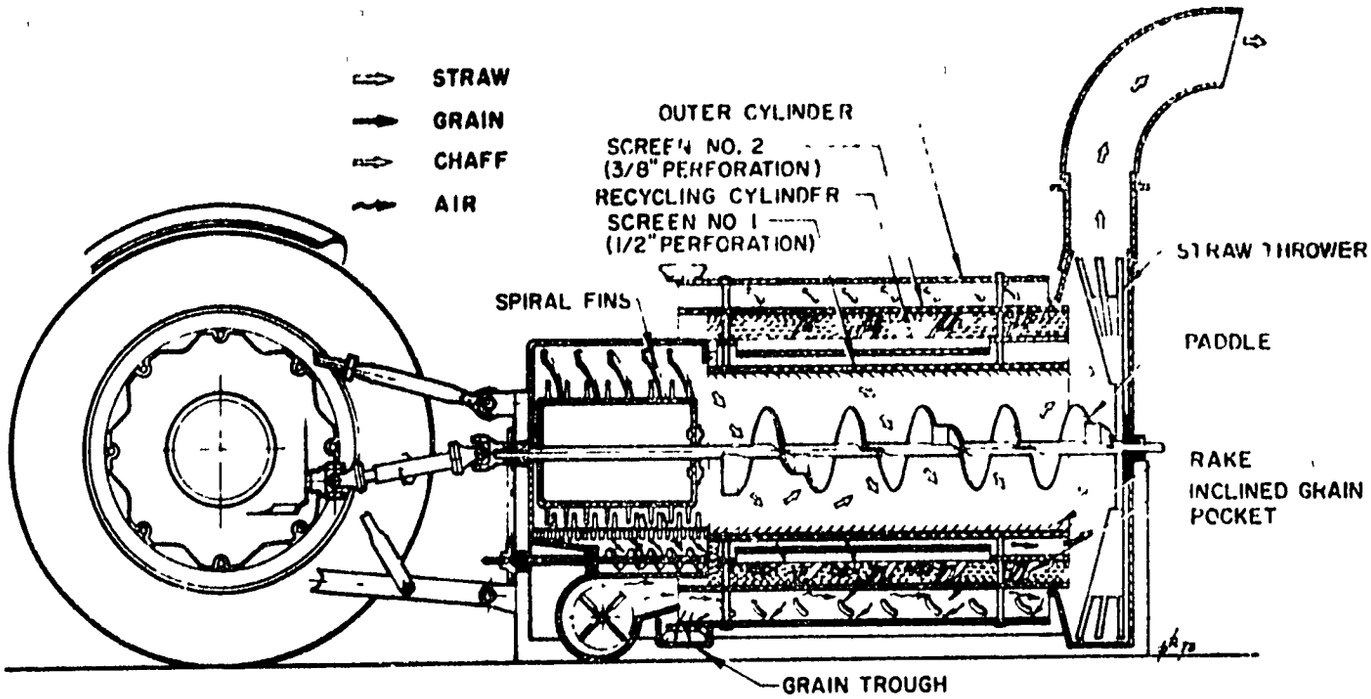

(a)

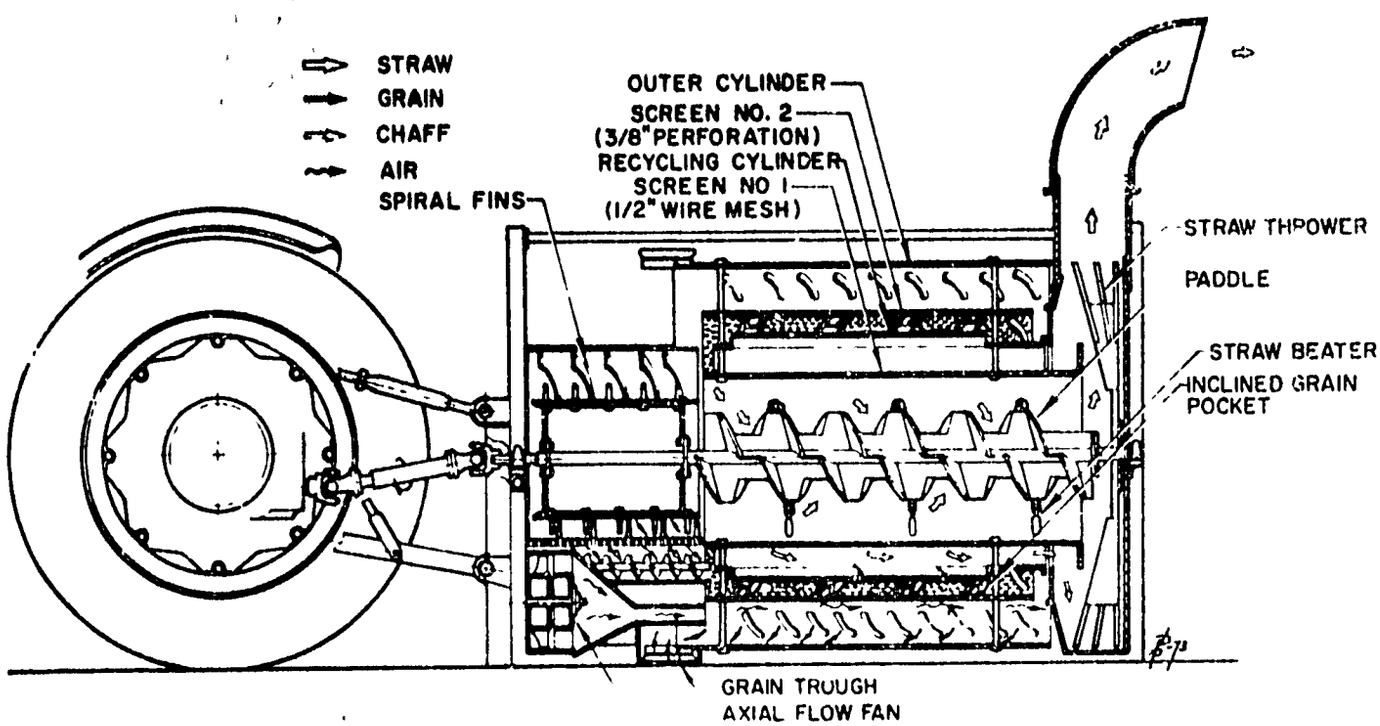

(b)

Fig. 4a and b. Schematic drawings of (a) first prototype PTO-driven thresher and (b) a second prototype incorporating the latest modifications for improved grain-cleaning performance.

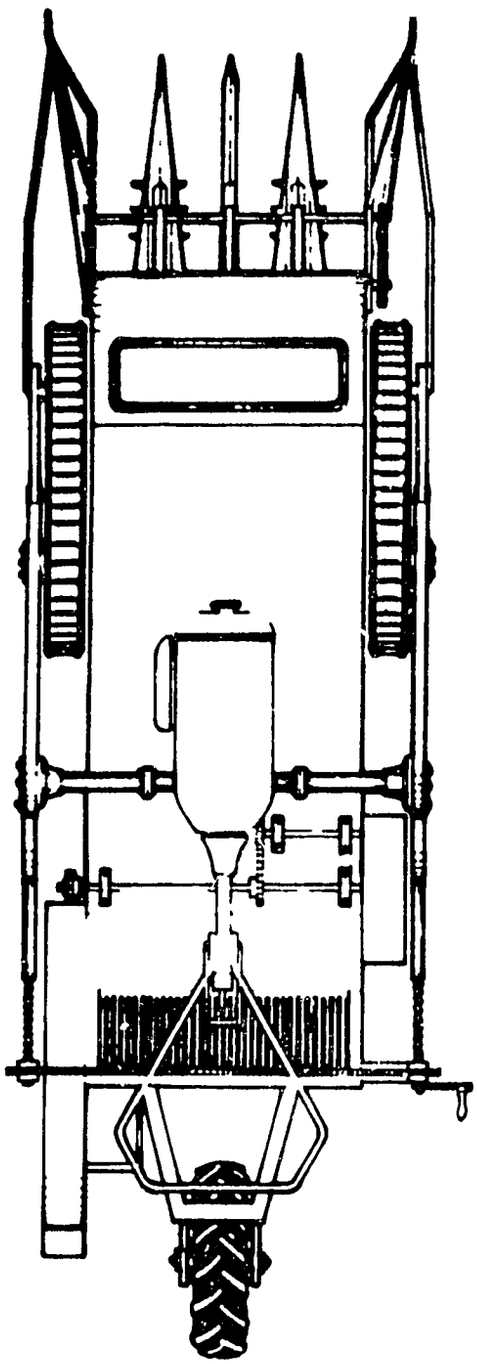

4-ROW SELF-PROPELLED PADDY STRIPPER HARVESTER

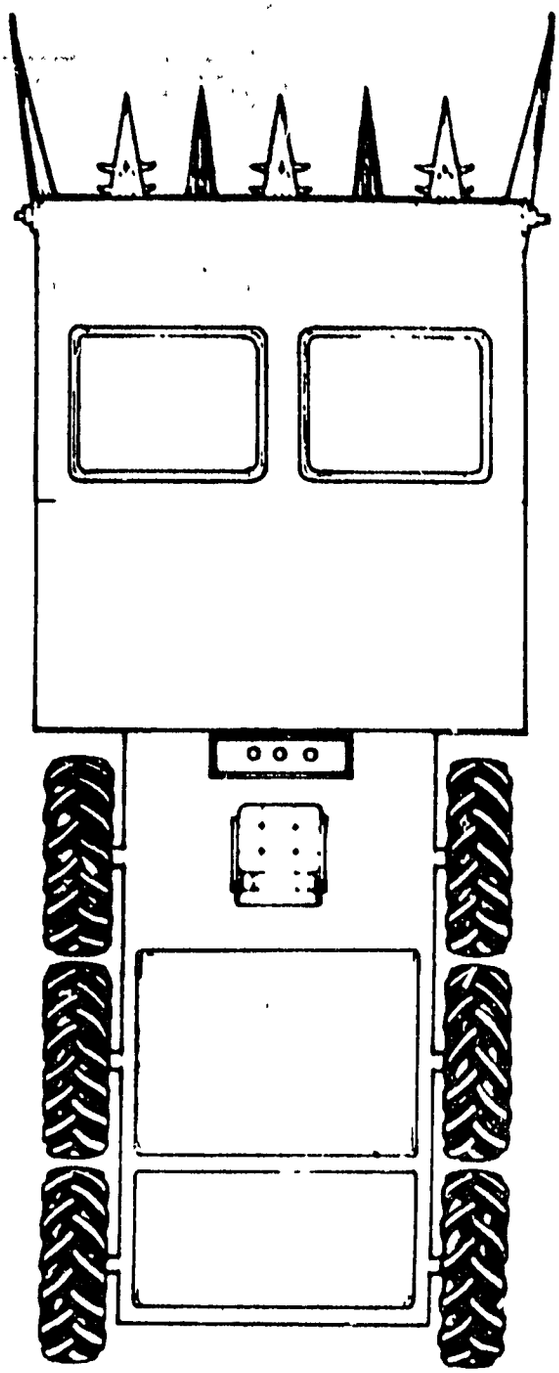

6-ROW SELF-PROPELLED PADDY STRIPPER HARVESTER

Fig. 5. Drawings of the four-row and the six-row self-propelled stripper harvesters.

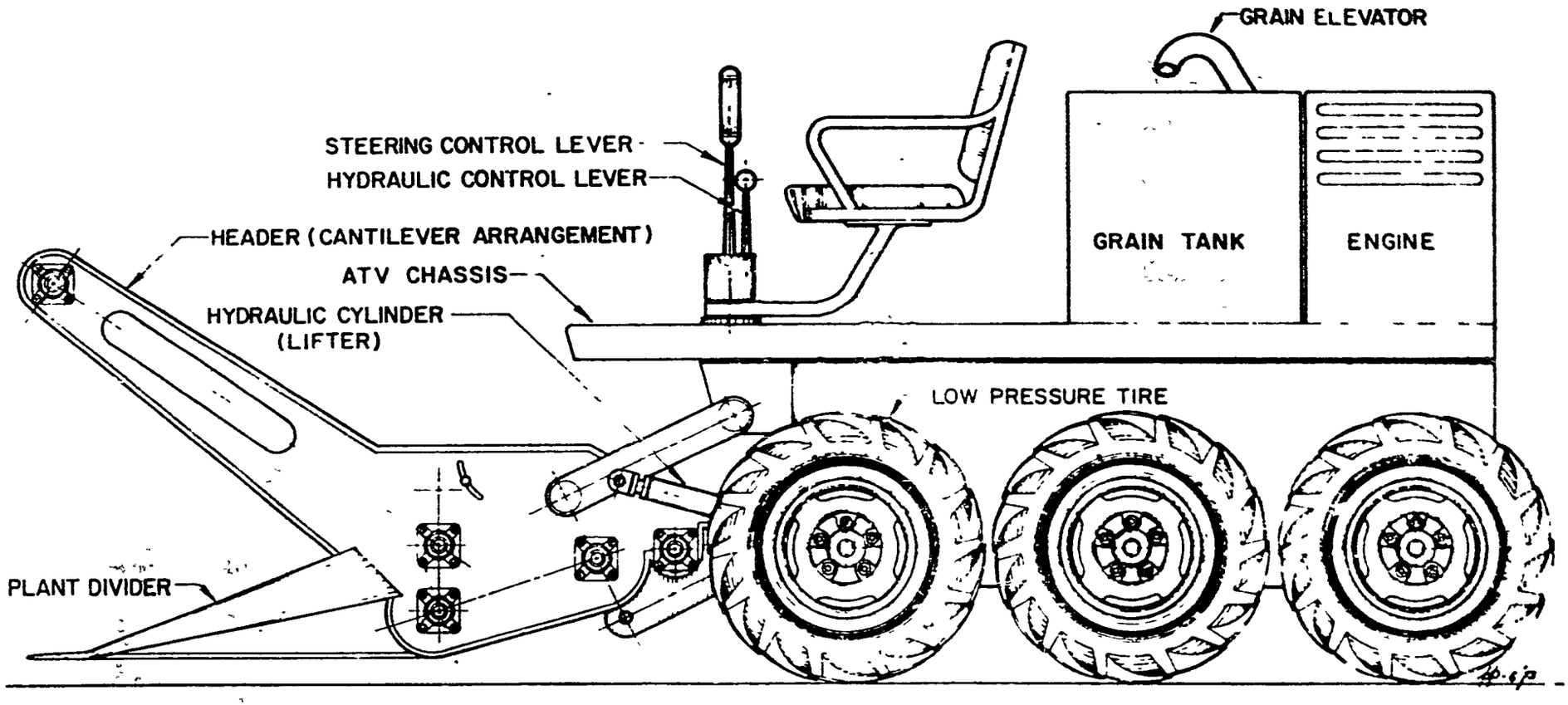

Fig. 6 The ATV concept for the 6-row paddy stripper harvester utilizing six drive wheels and a skid steer transmission.

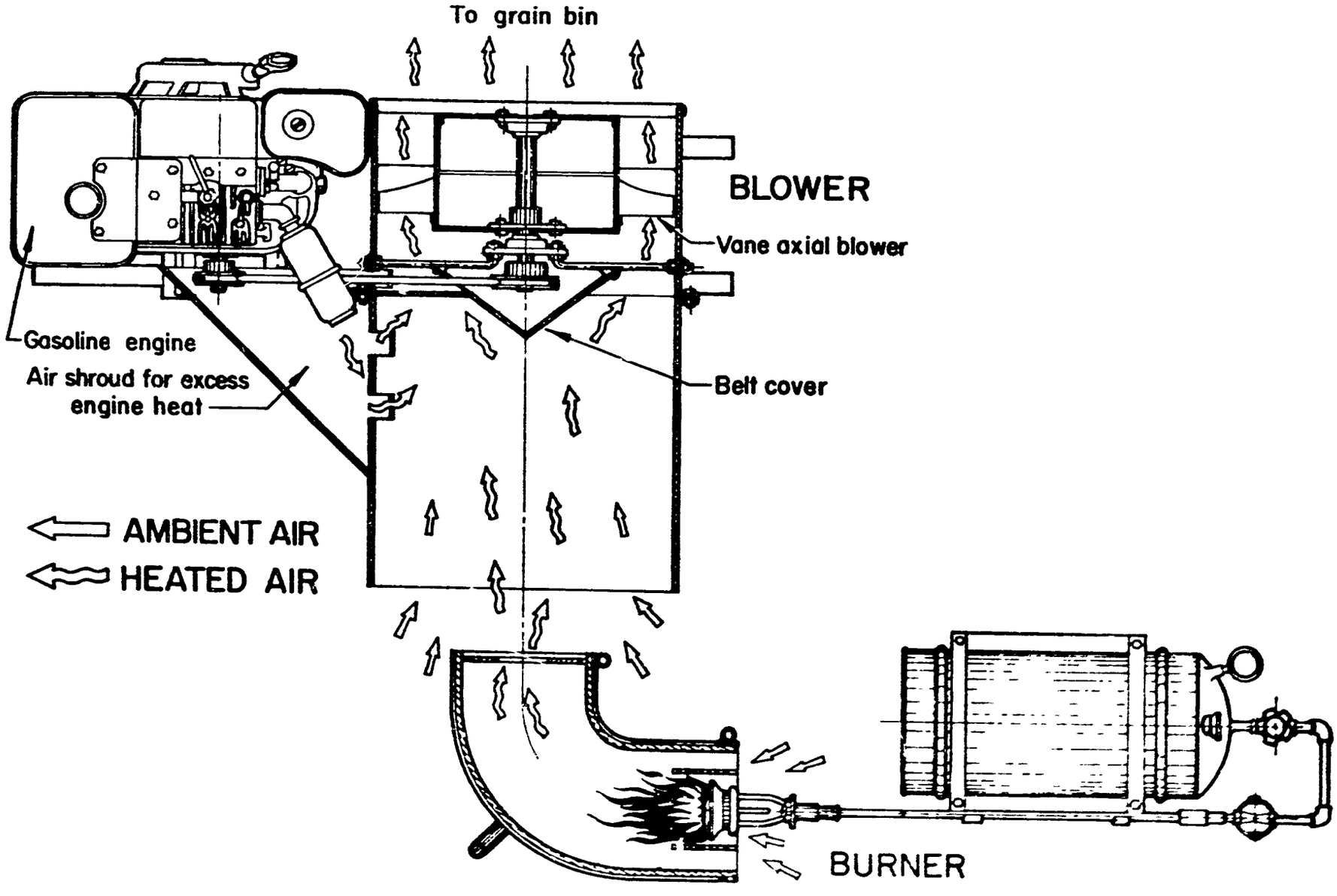

Fig. 7 Low-cost diesel-oil burner designed for use with the IRRI batch dryer.

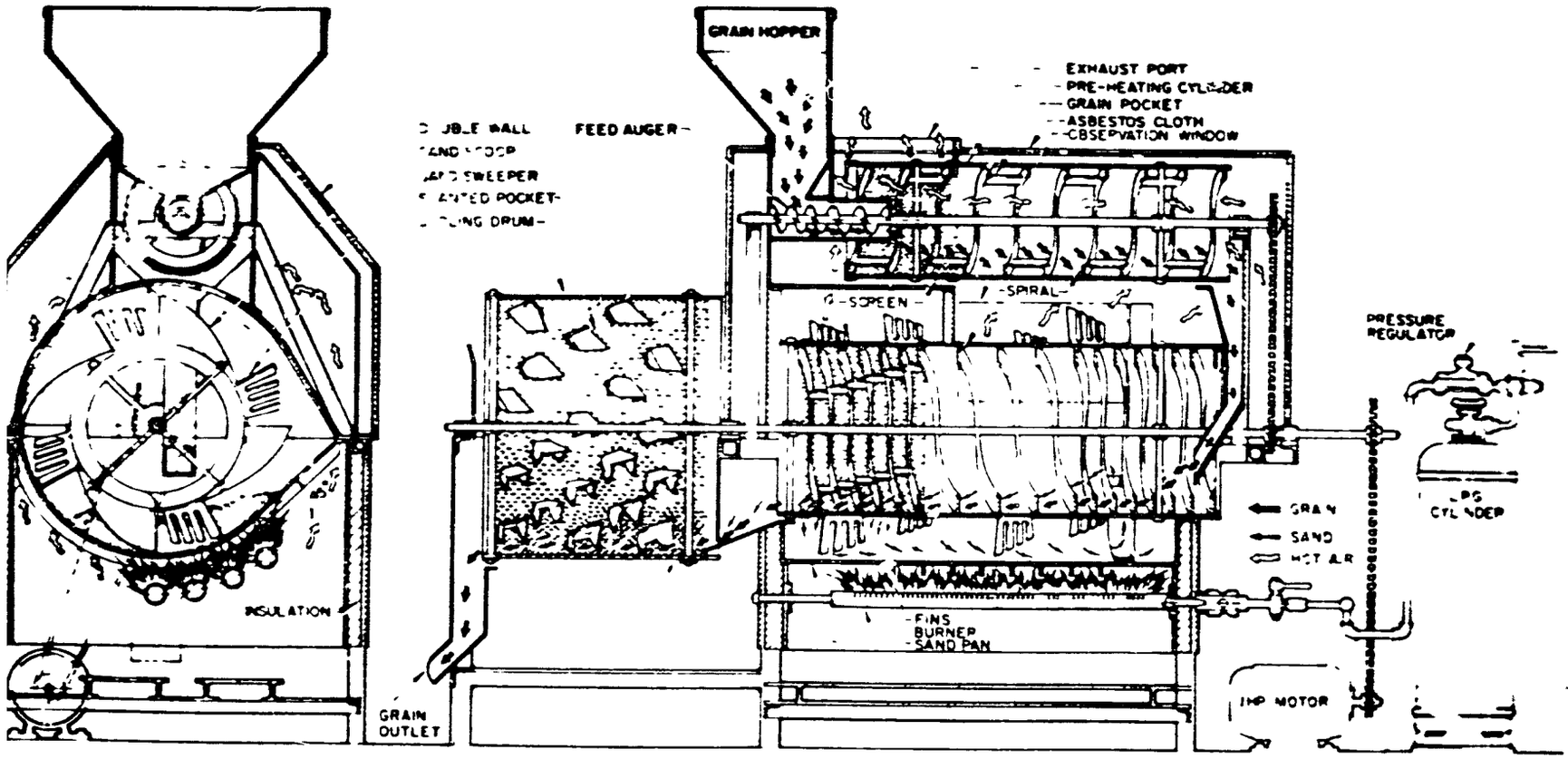

SCHEMATIC DRAWING OF THE CONTINUOUS FLOW HEATED-SAND DRYING AND PARBOILING MACHINE

Fig. 8 Modified version of the heated-sand parboiler using a rotary drum to cool outgoing grain and double insulation wall to reduce heat loss.

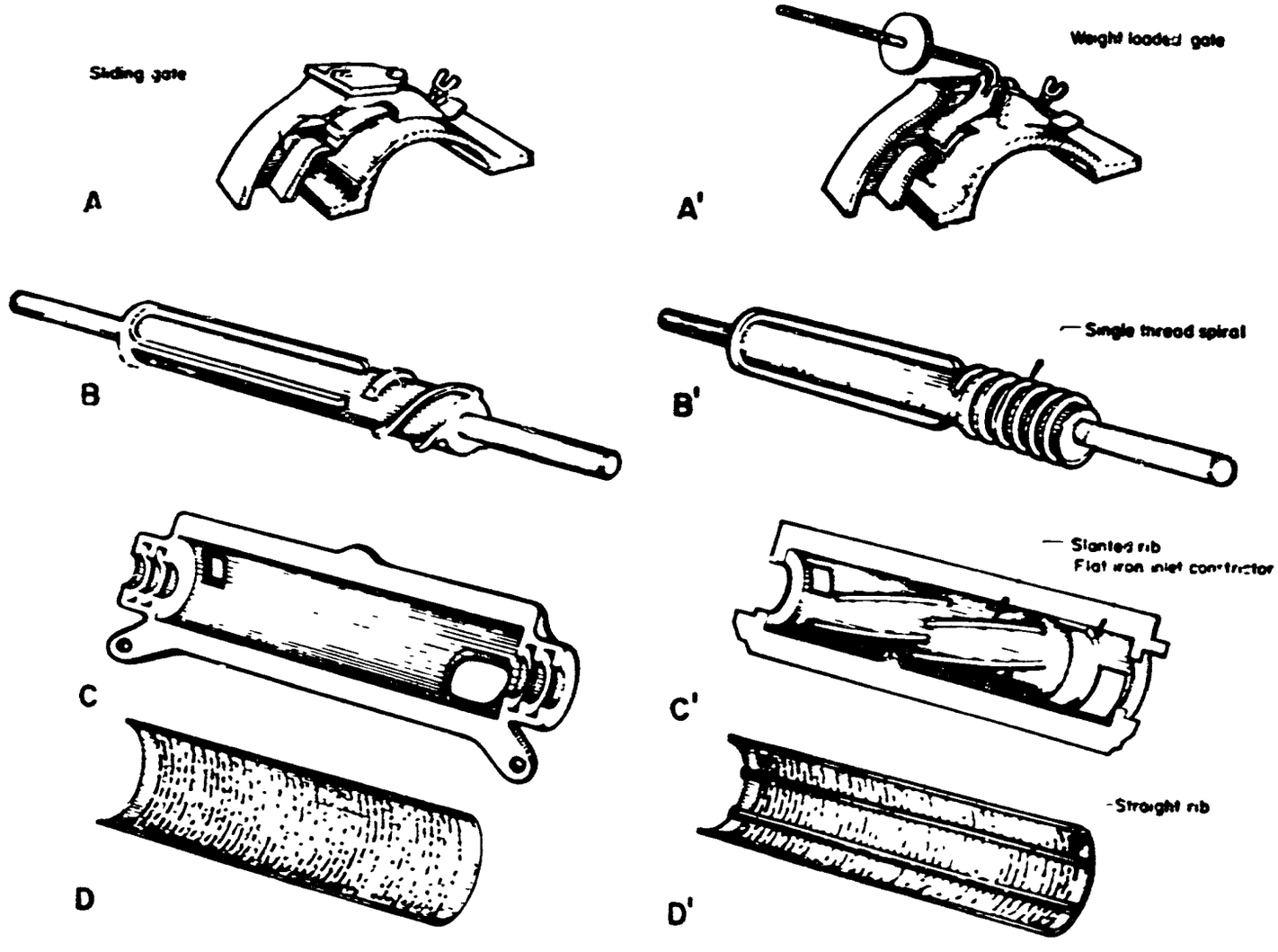

Fig. 9. Original parts of the Engleberg mill and the proposed modifications.

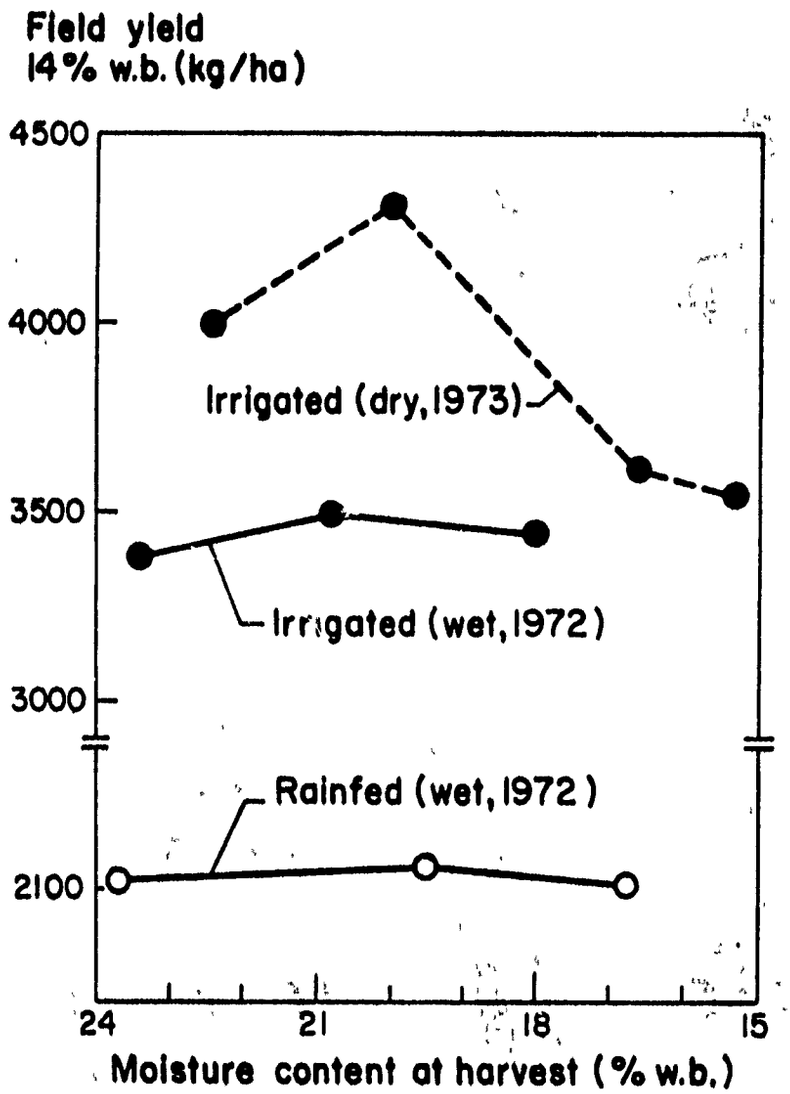

Fig. 10 Field yield of irrigated and rainfed ce at different moisture contents at harvest (C[illegible], Nueva Ecija, 1972 wet and 1973 dry seasons, IR20).

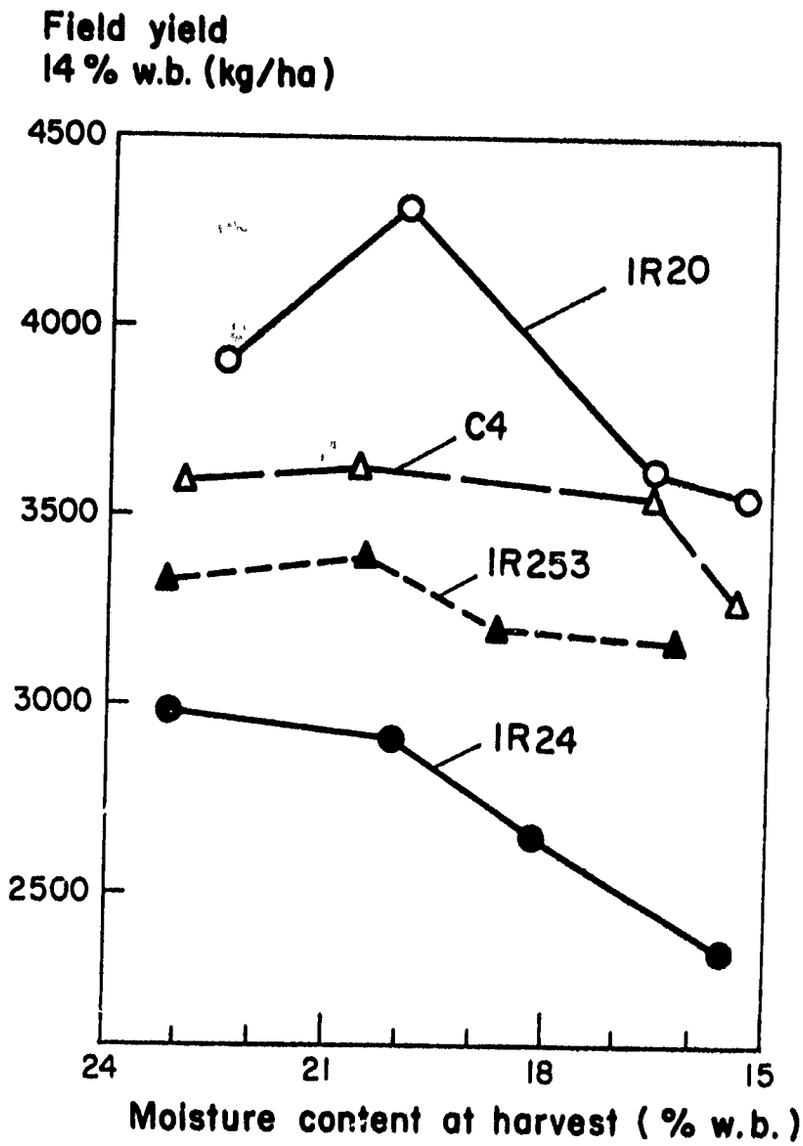

Fig. 11 Field yield of 4 irrigated rice varieties at different moisture content at harvest (Gapan, Nueva Ecija, 1973 dry season).

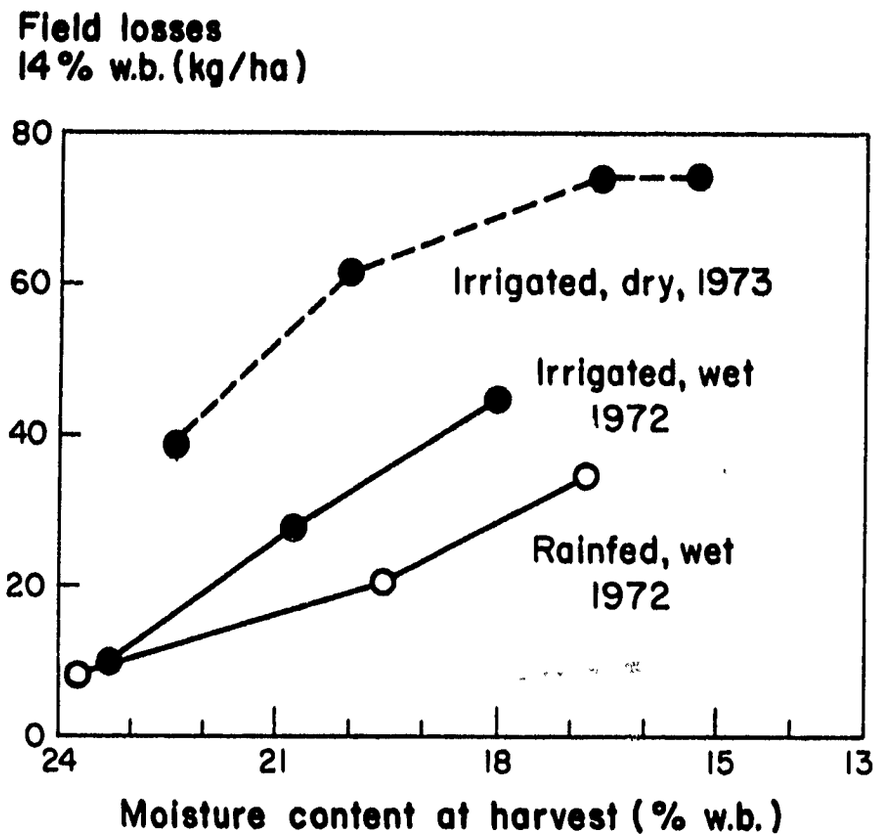

Fig 12 Field losses of irrigated and rainfed rice at different moisture content at harvest (Gapan, Nueva Ecija, 1972 wet and 1973 dry seasons, IR20).

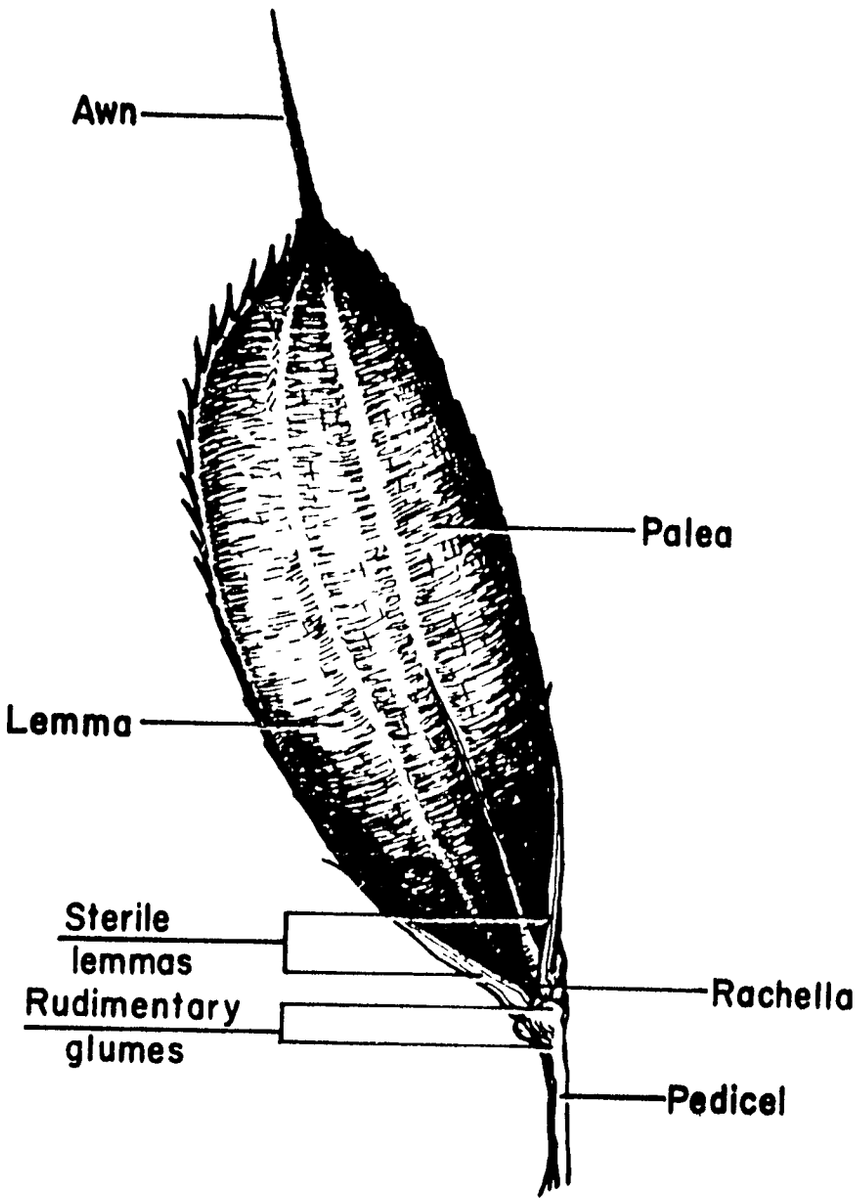

Fig. 13 **A PADDY GRAIN**

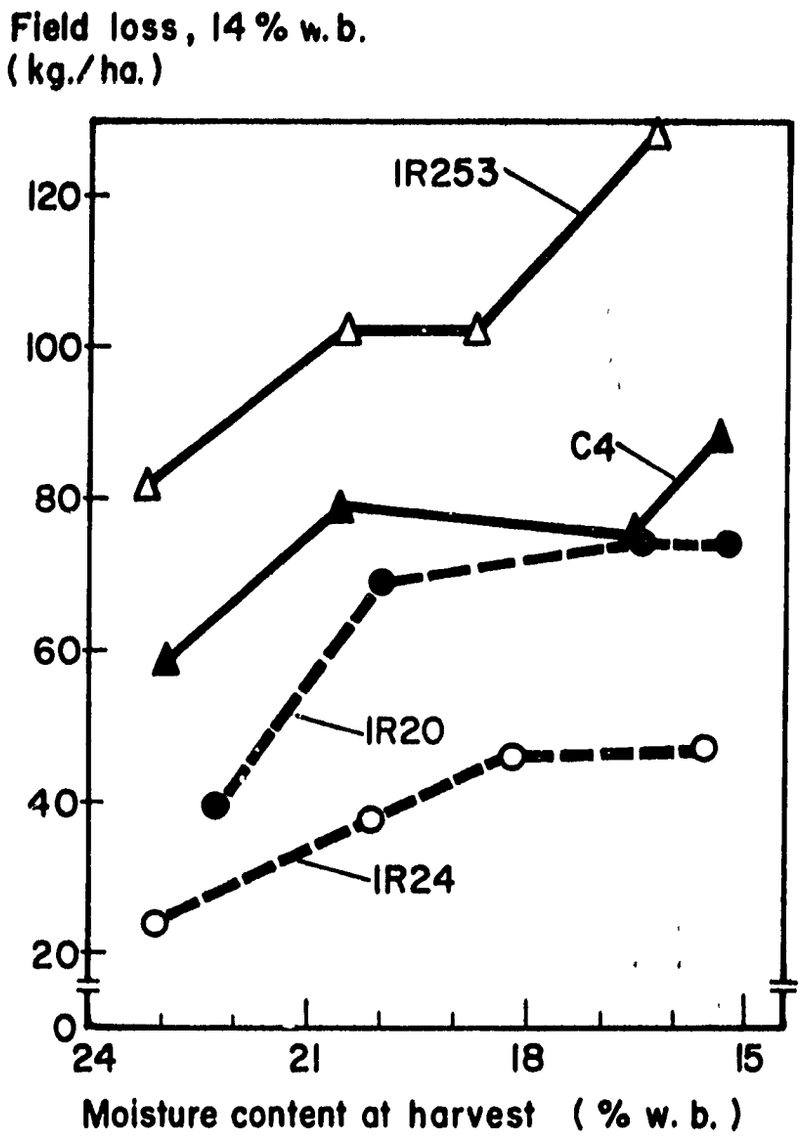

Fig 14 Field losses of 4 varieties of irrigated rice at different moisture contents at harvest (Gapan, Nueva Ecija, 1973 dry season).

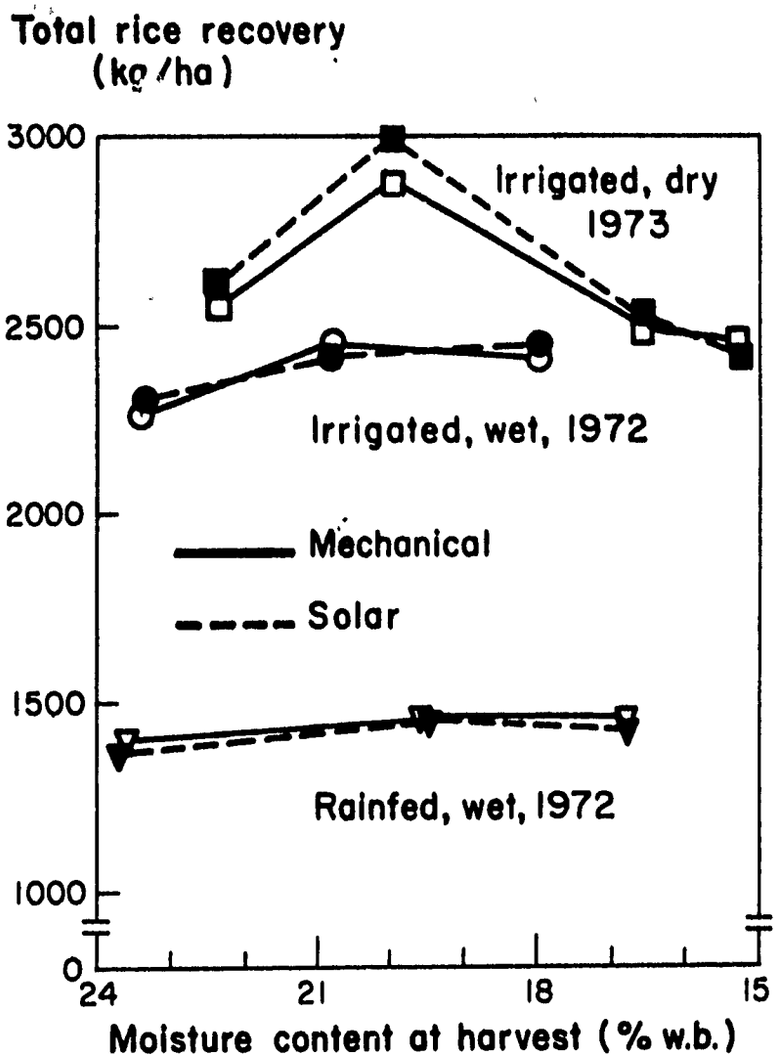

Fig. 15 Total rice recovery of irrigated and rainfed rice at different moisture contents at harvest and using two drying methods (Gapan, Nueva Ecija, 1972 wet and 1973 dry seasons, IR20).

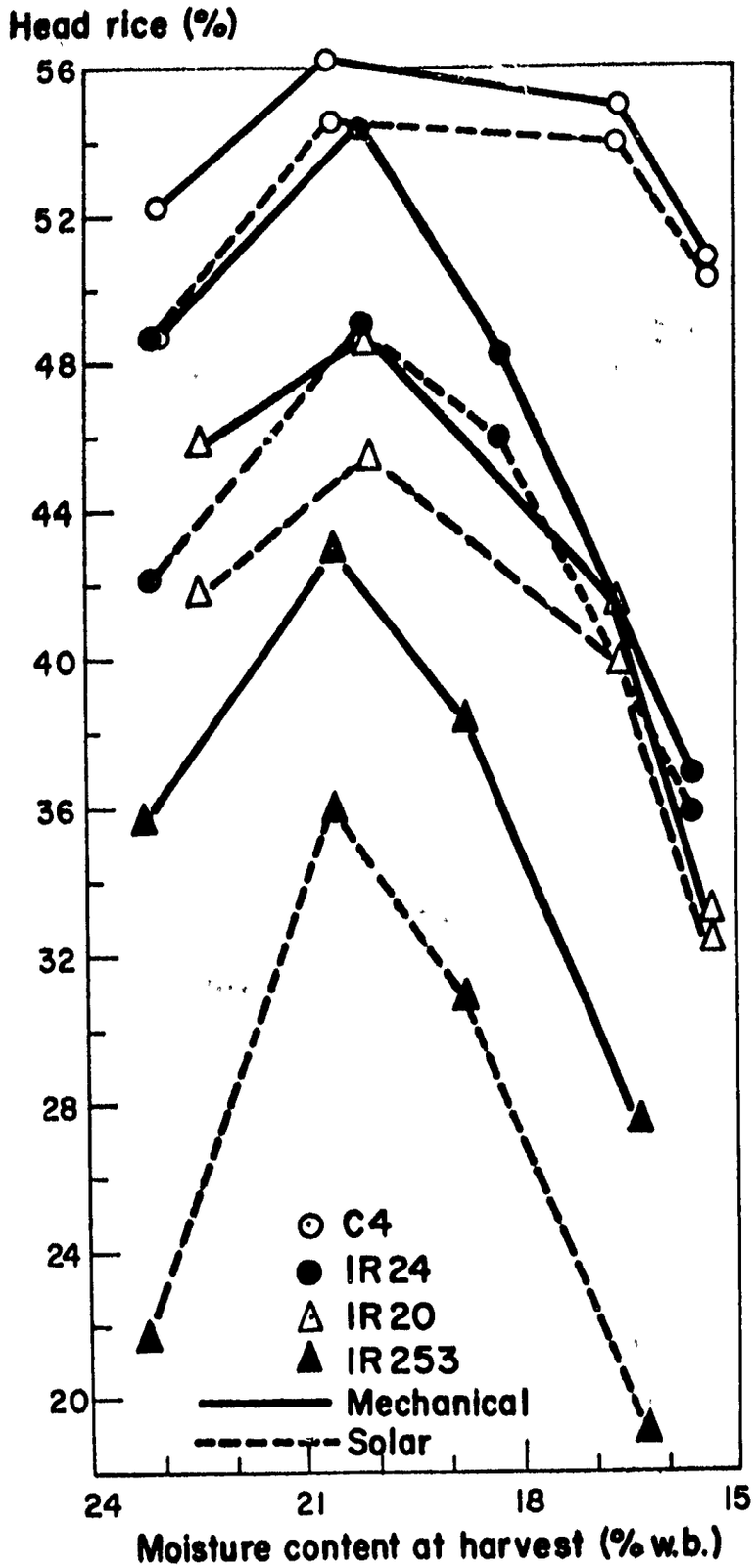

Fig. 16 Head rice recovery as affected by moisture contents at harvest and drying methods (Irrigated crop, Gapan, Nueva Ecija, 1973 dry season).

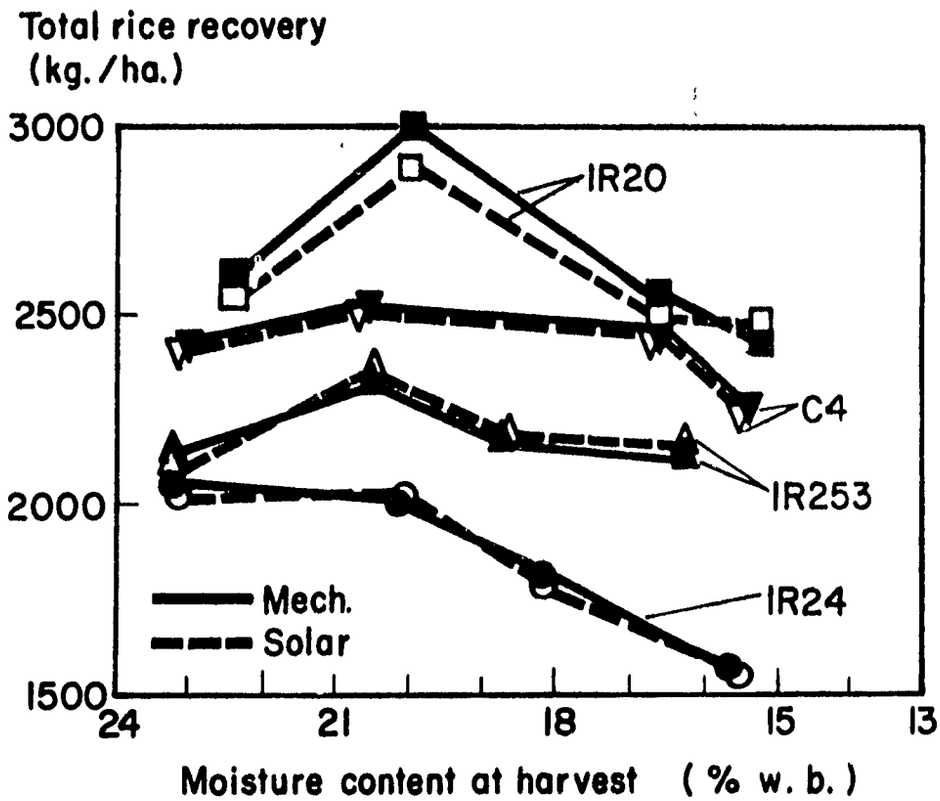

Fig. 17 Total rice recovery versus moisture content at harvest of 4 varieties of irrigated rice using two drying methods (Gapan, Nueva Ecija, 1973 dry season).

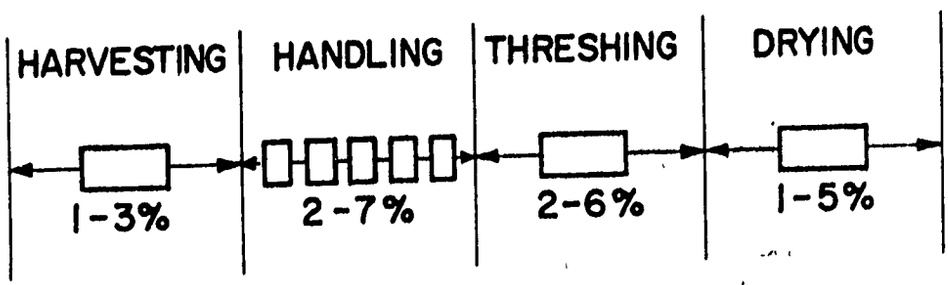

Fig. 18. Range of loss incurred in harvest and post harvest operations.

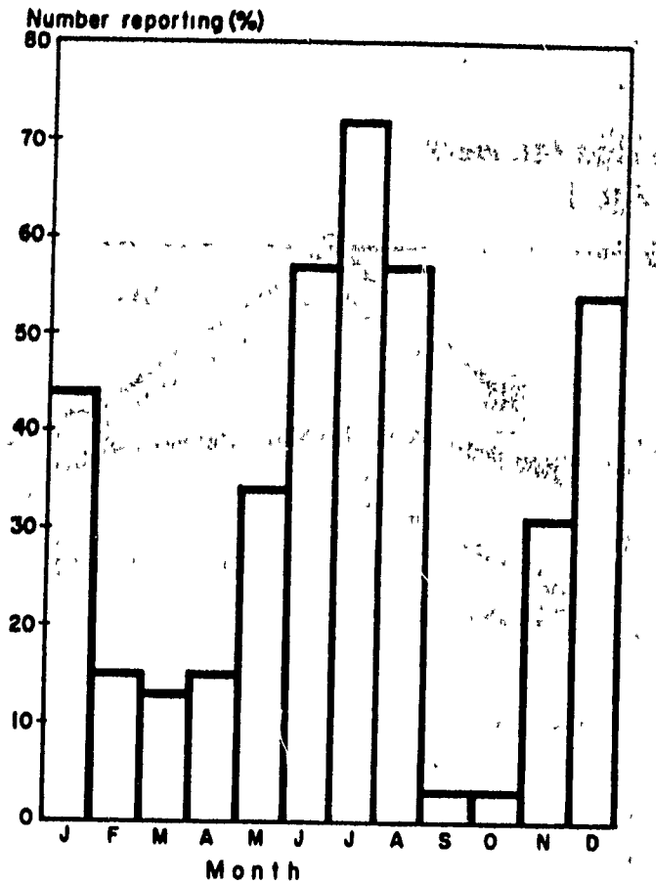

Fig. 19 Monthly use pattern, 142 tractors, Nueva Ecija, Philippines, 1972

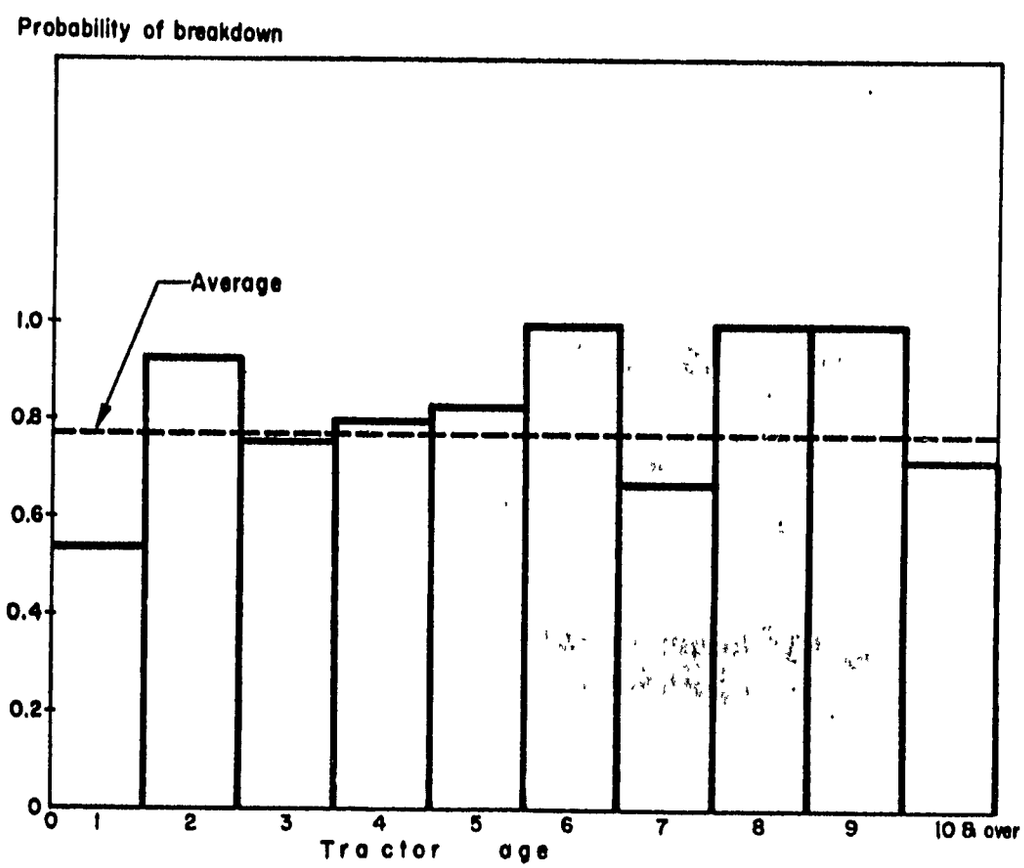

Fig. 20 Probability of at least one breakdown annually with tractor age, Nueva Ecija, Philippines, 1972

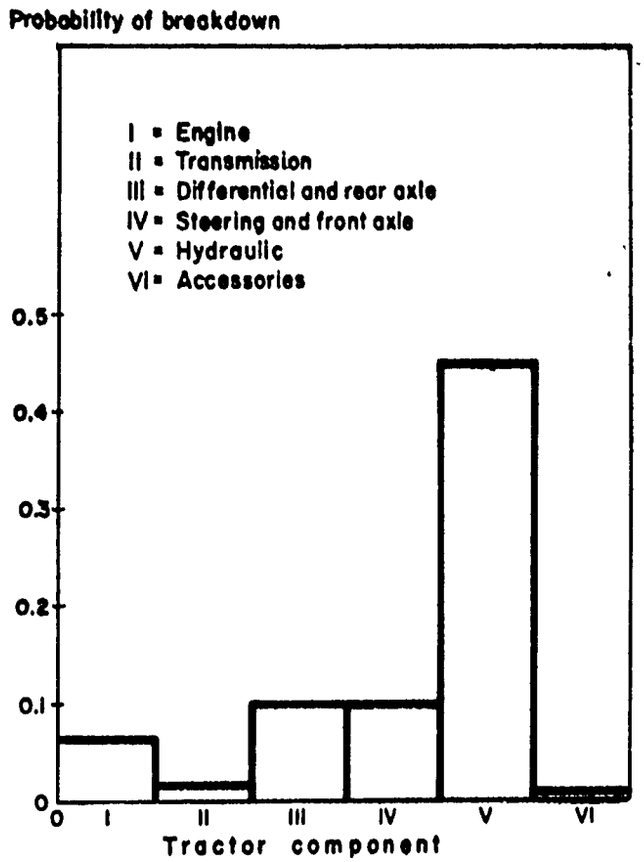

Fig.21 Tractor reliability by component, Nueva Ecija, Philippines, 1972

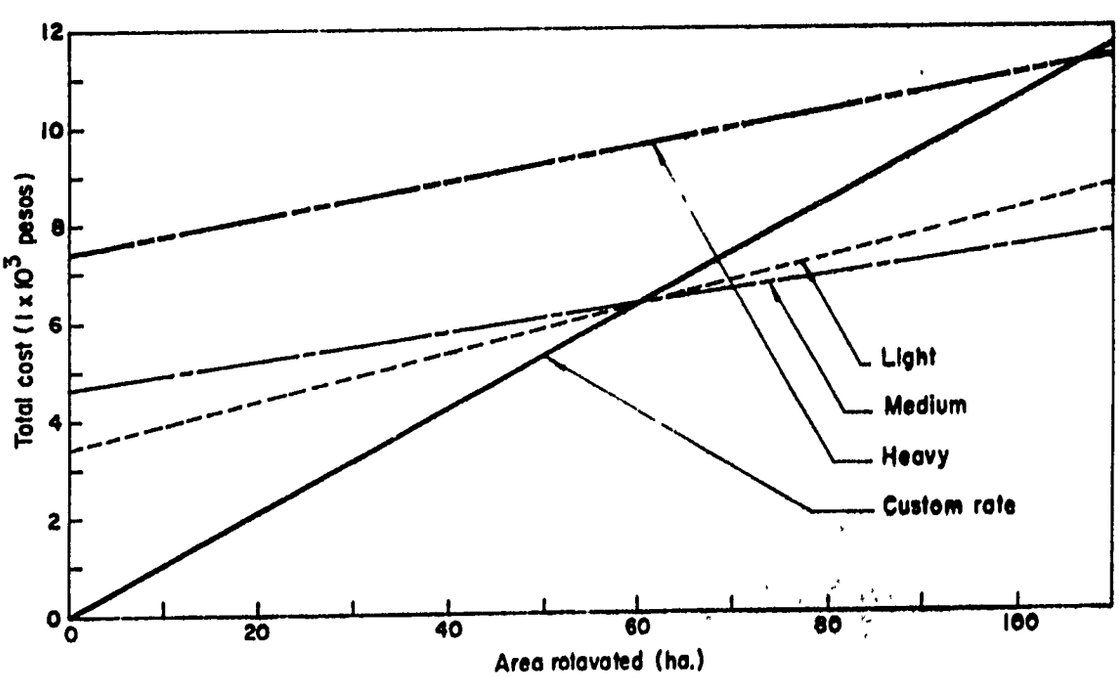

Fig.22 Total cost of tractor tillage, Nueva Ecija, Philippines, 1972