AGENCY FOR INTERNATIONAL DEVELOPMENT
WASHINGTON, D. C. 20523

BIBLIOGRAPHIC INPUT SHEET

FOR AID USE ONLY
BATCH #28

1. SUBJECT CLASSIFICATION

A. PRIMARY
Serials Y-AN20-0000-GG50

B. SECONDARY
Agriculture--Farm equipment--Tropics

2. TITLE AND SUBTITLE

Agricultural equipment development research for tropical rice cultivation; semi-annual progress report no.14, Jan.,1972 to June,1972

3. AUTHOR(S)

(101) IRRI

4. DOCUMENT DATE	5. NUMBER OF PAGES	6. ARC NUMBER
1972	54p.	ARC RP631.3.I61

7. REFERENCE ORGANIZATION NAME AND ADDRESS

IRRI

8. SUPPLEMENTARY NOTES *(Sponsoring Organization, Publishers, Availability)*

(Research summary)

9. ABSTRACT

10. CONTROL NUMBER	11. PRICE OF DOCUMENT
PN-RAB-585	

12. DESCRIPTORS

Agricultural machinery
Intermediate technology
Rice

13. PROJECT NUMBER

14. CONTRACT NUMBER
CSD-2541 Res.

15. TYPE OF DOCUMENT

AID 590-1 (4-74)

54p.

A(8)

SEMIANNUAL PROGRESS REPORT NO. 14

JANUARY 1 TO JUNE 30, 1972

(For restricted circulation only)

CONTRACT NO. AID/csd-2541
Agricultural Equipment Development Research
for Tropical Rice Cultivation

by

AMIR U. KHAN
Development Engineer

FRED E. NICHOLS
Evaluation Engineer

BART DUFF
Agricultural Economist

Agricultural Engineering Department
The International Rice Research Institute
Los Baños, Laguna, Philippines

Copies of this report have been filed with:

Office of Agriculture
Bureau for Technical Assistance
USAID, Washington, D.C.
(100 copies)

The Director
USAID, Manila, Philippines
(3 copies)

TABLE OF CONTENTS

Title	Page
Introduction	1
Progress Report	3
Design and Development	4
Field Machinery	
4-6 hp power tiller	4
Multicrop axial-flow thresher	4
PTO thresher	6
Stripper harvester	7
Drying and Processing	
Batch drier	8
Rice hull furnace	10
Direct-flame drier	11
Heated-sand drying and parboiling machine	11
Rice milling studies	14
Test and Evaluation	18
Individual-row hopper paddy seeder	18
Power tiller	18
Table thresher	19
McCormick thresher tests	20
Power tiller survey	20
Economics of Mechanization	21
Small-scale industry study	21
Materials cost survey	21
Retail survey of agricultural machinery	22
Human energy measurement study	23
Rice milling and processing	24
Subcontract, Development, Extension and Training Activities	26
Subcontracts	26
Small-scale machinery project	26
Training	27
Work Plan	28
Personnel List	32
Tables	
Figures	

INTRODUCTION AND SUMMARY

The contents of this report, the 14th in a series, describes activities carried out under IRRI/AID Contract No. csd-2541 for the period January 1st through June 30, 1972. The major objectives of the contract continue to be the design, development, testing and extension of agricultural machinery for use by small- and medium-scale rice producers and processors in the tropics.

The transmission of the 4-6 hp power tiller was modified to accommodate heavy duty bearings and an improved power input shaft mounting. The new transmission is easier to manufacture. This improved tiller design was released to two manufacturers in the Philippines. The design of the multihopper seeder was improved and a firm is now producing a trial production batch. The first prototype PTO thresher was extensively tested, resulting in a number of improvements. These improvements are being incorporated in a second prototype unit which is being fabricated. A four-row, self-propelled field stripper harvester was designed and is undergoing further development. A throw-in type multicrop thresher using a new axial-flow design is under development. Preliminary tests with this thresher indicate a high threshing output per man-hour and a low power input. A production prototype unit of the axial-flow thresher is now under fabrication.

A simple batch-type drier using a kerosene burner and an axial-flow fan was developed. The drawings have been released to two local manufacturers. Manufacturers' quotations indicate that it can be marketed at less than half the price of comparable imported batch-type driers. Two different rice hull furnace designs are being evaluated for use with the batch drier. Improvements in the direct-flame and the heated-sand machines for drying and parboiling paddy resulted in improved heat utilization efficiency. In an effort to develop efficient rice milling equipment for village or community level operations, studies to evaluate existing and new milling concepts were undertaken.

Detailed bills of materials for the multihopper seeder, bellows pump, extendible blade lug wheel, 4-6 hp walking tractor, and batch drier were prepared. This information, in conjunction with working drawings, was made available to interested manufacturers to enable them to estimate production costs and material requirements. Continued attention was directed to measuring human energy expenditures with cardiac monitoring equipment in the optimization of equipment design parameters. Experimental field work was initiated to determine the magnitude and pattern of grain losses resulting from the use of alternative techniques in the harvesting, handling, threshing, and storage of paddy. Economic research to assess the cost-benefit levels of a range of conventional and modern milling technologies indicates considerable scope for improvements in milling efficiency. The institutional and methodological framework for a study of the metal working industry of the Philippines is nearing finalization. The latter study is designed to examine in detail the technical and economic characteristics of this industry.

Major field demonstration and extension activities in the Philippines remain concentrated in a cooperative small-scale machinery project located in Central Luzon. Extension and evaluation of the table thresher, lowland seeder, and power grain cleaner are being carried out through this project. Efforts have been continued to accommodate reasonable requests for trials and demonstrations from interested farmers and manufacturers. Under an expanded subcontract program, commercial models of each machine developed by the project are delivered to cooperating agencies and institutions throughout the Asian region for test and evaluation. The Institute of Agricultural Engineering & Utilization in Korea was added during the past six months as an active cooperator in this program. Negotiations continued with parties in Ceylon, Vietnam, Nepal, and Bangladesh for the establishment of subcontract agreements in these countries. Four persons from India, Indonesia, and Thailand underwent two-month training programs under the subcontract program.

Efforts to accelerate the test, evaluation, and extension of the machine designs have been reasonably successful. Tests were completed on the initial prototype of the 4-6 hp power tiller, one manufacturer's initial prototype, and continue on a second. Farmer response to this low-cost power tiller is enthusiastic and both manufacturers are planning heavy production schedules to meet demand. Extensive tests were conducted to improve the quality of the table thresher output as requested by end users.

Special Awards

Dr. Amir U. Khan received the 1972 Presidential Gold and Silver Medal Awards from the Philippine Inventors Commission during the annual contest for his inventions of the table thresher (Pat. No. 6428) and the rotary grain cleaner (Pat. No. 6430), respectively.

Papers and Publications

Contract personnel prepared and presented the following papers and articles during the reporting period:

Agricultural Engineering, IRRI. Grain cleaner instruction manual.

Agricultural Engineering, IRRI. Agricultural engineering department bibliography. May 1972.

Khan, A. U. Rice drying and processing equipment for Southeast Asia. Paper prepared for presentation at the 1972 Annual Meeting of the Amer. Soc. of Agr. Engineers, Hot Springs, Arkansas, June 27-30, 1972.

PROGRESS REPORT NO. 14
JANUARY 1 TO JUNE 30, 1972

The following personnel were responsible for these projects:

Design and development

Field machinery:

1. 4-6 hp power tiller	P. Cabanos, J. Policarpio
2. Multicrop, axial-flow thresher	A. Khan, E. del Rosario
3. PTO thresher	A. Khan
4. Stripper harvester	A. Khan, J. Policarpio

Drying and processing:

5. Batch drier	A. Manalo
6. Rice hull furnace	A. Manalo, A. Khan
7. Direct-flame drier	A. Manalo
8. Heated-sand drying and parboiling machine	A. Khan, J. Arboleda
9. Rice milling studies	J. Arboleda, A. Khan

Test and evaluation

10. Individual-row hopper-paddy seeder	C. Padolina, E. del Rosario
11. Power tiller	C. Padolina
12. Table thresher	B. Ramos, F. Nichols
13. McCormick thresher tests	C. Padolina, B. Ramos, F. Nichols
14. Power tiller survey	B. Ramos, F. Nichols

Economics of mechanization

15. Small-scale industry study	I. Estioko, B. Duff
16. Materials cost survey	B. Samson
17. Retail survey of agricultural machinery	N. Orcino, B. Samson
18. Human energy measurement	N. Orcino
Rice milling and processing	I. Estioko, B. Duff

DESIGN AND DEVELOPMENT

Field machinery

4-6 hp power tiller

Some bearing failures were encountered by the test section during the endurance tests of the second prototype power tiller. The chain power transmission system was modified to eliminate the cantilever bearing arrangement on the input pulley-driven shaft (fig. 1). The ball bearings of the input shaft and the countershafts were changed to heavy duty series. The larger input shaft sleeve was changed to accommodate the same bearing as used on the main axle sleeve. Thus the whole tractor transmission used only two sizes of bearings which simplifies parts inventory and servicing problems. All ball bearing caps were changed to flange cartridge type for precise bearing alignment and ease of assembly. The axle was increased from 2.54 cm (1 in.) to 3.17 cm ($1\frac{1}{4}$ in.) hexagonal section, as measured across flats, because of the many failures reported with the 2.54 cm (1 in.) hexagonal axles used by the imported power tillers. The wall of the chain transmission housing was increased to 0.31 cm ($\frac{1}{8}$ in.) M.S. steel plate to minimize flexing and fatigue failure of the chain case.

The third prototype unit incorporating the above modifications was completed and released for endurance testing. Two manufacturers have submitted their prototype tillers which are now being evaluated by the test group (fig. 2).

Multicrop axial-flow thresher

Comparative studies of different types of threshing cylinders with the hold-on and throw-in feeding methods were reported in semiannual reports No. 8 and 9. These studies indicated that throw-in fed threshers can provide higher output per man-hour than hold-on fed machines. Currently available throw-in type threshers (McCormick type threshers in the Philippines) are very costly, have complicated mechanisms, require high power (30-60 hp) to operate, and are bulky. These bulky machines are not well suited for moving from one field to another which is necessary for custom threshing. Their use is limited only to the dry season because of the problems of mobility during the wet season.

A Japanese double-drum thresher is being marketed in Asia which can be operated both as a hold-on or throw-in fed thresher. Its performance as a throw-in machine has been satisfactory. The threshed material moves axially along the two threshing drums when it is operated as a throw-in machine. It can be used with rice, sorghum, wheat, and other grain crops. The price of this machine in the Philippines, however, is high and it is difficult to fabricate by small manufacturers in the Asian region. A few manufacturers in the Philippines have attempted to manufacture some non-axial flow, double-drum threshers. These machines are rather crudely

designed. Their power requirements are relatively high and grain separation is poor. Both types of double-drum threshers require two sets of drum mountings and a multiple drive system which adds to their costs.

The need for a low-cost, lightweight, throw-in type thresher requiring low power input which could provide adequate output per man-hour prompted the development of a multicrop, single-drum, axial-flow thresher. The single drum (fig. 3) provides possibilities of easier production and lower fabrication costs. The first prototype single-drum, axial-flow thresher basically consisted of a 35.56-cm (14 in.) diameter x 127 cm (50 in.) long wire-loop type threshing drum. The threshing drum had a full length of 0.95 cm ($\frac{3}{8}$ in.) perforated sheetmetal concave, with a total area of 0.7 sq m (7.85 sq ft). The drum had a sheetmetal cover with 5.08-cm (2 in.) space between the cover top and the wire loops. Spiral baffles were installed in this space to move the threshed material in an axial direction when it was thrown against the cover. A 20.32-cm (8 in.) diameter centrifugal blower was located under the concave to blow the chaff and direct it away from the grain falling through it. A 7.62-cm (3 in.) diameter auger collected the winnowed grain and delivered it to one end of the machine. Any heavy pieces of straw that could not be removed by the airflow were screened by a 22.86-cm (9 in.) wide rotary screen. A 6 hp engine was used to drive the thresher. The thresher was fitted with 71.2-cm (28 in.) diameter wheels for easy transport.

Three types of concave perforations were tried (fig. 4). The result indicated that oblong perforations provide the best performance; however, a 0.95-cm ($\frac{3}{8}$ in.) diameter circular perforation was finally selected due to its easy availability in the Southeast Asian countries.

The adequacy of the length of the threshing drum was checked by installing a series of grain-collecting compartments under the concave. The amount of grain collected in each compartment was recorded and the threshing and separating pattern along the total span of the threshing drum was determined. From the data, it was apparent that the length of the threshing drum could not be reduced from 203.2 cm (80 in.) without increasing grain separation loss. It was felt, however, that the grain lost with the straw could be reduced by increasing the concave area by enclosing the threshing drum in a full - length cylindrical concave. The screening area of the concave, however, was increased from 0.73 sq m (7.85 sq ft) to 2.09 sq m (22.55 sq ft) (figure 5) by fabricating two concaves, one lower and one upper. The two concaves, when bolted together, formed an oval - shaped concave. The threshing cylinder was mounted slightly offset along the longer vertical axis of the oval concave. This provided a 7.62-cm (3 in.) space between the wire loops and the concave on the top end. Sheetmetal deflecting louvers spaced at 15.24 cm (6 in.) were installed in this space to move the threshed material in an axial direction toward the exit. The top concave was provided with a sheetmetal housing

with 5.08-cm (2 in.) spacing to collect the separated grain from the top concave and deliver it for winnowing. The wire loops were replaced with straw-throwing paddles on the threshing drum near the exit opening. Two rows of five spike teeth were installed near the feed end on the concave to improve threshing efficiency. Test results obtained indicate that the increased concave area and the spikes in the concave improved the threshing and separating performance. A threshing output of up to 660 kg/hr with a 1 percent separating and threshing loss was obtained with a 6 hp engine. Cleanliness of output was 95 to 98 percent.

Further optimization of the axial-flow thresher design is currently underway and a second prototype incorporating many improvements is being fabricated.

PTO thresher

Attempts on optimizing the design of the three major components of the PTO thresher (cylinder-concave, rotary screen separator, and straw thrower) have been reported previously. During this report period, attempts were made to reduce separating loss by increasing the retention of the threshed material in the rotary separator. The paddle angle of the central straw-throwing paddles was changed from 40° to 60° from the shaft axis. This modification slowed the movement of the threshed material in the inner screen. The addition of three rakes, slanted toward the straw thrower increased the dispersal and break-up of the straw lumps which helped in grain separation.

The thresher was tested in farmers' fields in the towns of Cainta, Rizal and Plaridel, Bulacan where large McCormick-type threshers are widely used for custom threshing. During these long-duration tests, it was observed that small pieces of straw accumulated between the inner screen (no. 1) and the recyling cylinder. When this occurred the grain loss increased to beyond 10 percent and it was necessary to stop the thresher and remove the clogged material. The clearance between the inner screen (no. 1) and the recycling cylinder was increased from 2.54 cm (1 in.) to 6.82 cm (2½ in.) and the clogging problem was eliminated.

Further attempts to improve the grain cleanliness were made. It was observed that the straw thrower moved a considerable amount of air in the straw-throwing operation and some of this air blew back into the space between the no. 2 screen and the outer cylinder. This created air turbulence which interfered in the proper winnowing of the grain. To minimize the blow-back effect from the straw thrower, the open space between the ends of no. 2 screen and no. 3 cylinder were closed with s h e e t m e t a l. Twelve openings of 7.62 cm (3 in.) x 7.62 cm (3 in.) were cut in the outer cylinder at about 15.24 cm (6 in.) from the closed end at the rear. The air from the winnowing blower along with the lighter impurities were exhausted through these openings. With this modification, the cleaning

performance was quite s a t i s f a c t o r y. The grain cleanliness was further improved by shortening the length of the outer cylinder by 5.08 cm (2 in.) for the winnowing air and impurities to escape. The inner wall of the thrower housing was changed to a conical shape to facilitate smooth flow of the winnowing air out of the annular space (fig. 6). The results of tests made with this revision are shown in table 1. The output of the thresher ranged from 1.10 to 1.75 tons/hr during the long-duration field trials.

A second PTO thresher prototype designed for commercial production is being fabricated. Weight reduction and ease of manufacture are prime considerations in its design. Attempts are being made to incorporate a belt feeding mechanism to permit uniform feeding which can increase the thresher output.

Stripper harvester

A four-row, self-propelled stripper harvester (fig. 7) incorporating some of the design features optimized with the laboratory test unit was designed. To avoid building a prime mover unit for the stripper harvester, a standard 7.5 hp walking power tiller was used as the prime mover. The tractor was mounted on a high-clearance straddle type chassis. The chassis had a single caster wheel at the rear. The two driven wheels were in the front and mounted on two pivoted chain housings equipped with the necessary chain drives from the tractor axles. Pivoting the chain housings with a crankscrew arrangement raised or lowered the front end of the chassis. The unit was steered by activating the two standard tiller steering clutches.

The main components of the stripper unit, the plant-gathering mechanism, the threshing belt, and the grain-straw handling system, were housed in a box-like structure. A woven wire belt was used as a straw walker for separating the grain from the straw. A cross auger placed at the back end of the stripper box collected the grain and delivered it to an elevator for delivery to the bags. The elevator consisted of a 7.62-cm (3 in.) flat rubber belting with small rubber flaps, enclosed in a sheetmetal housing.

The stripper box unit was mounted under the straddle-type chassis. Raising or lowering the chassis permitted the height adjustment of the stripper mechanism to suit different crop heights. During stripping, the part of the plant that bends around the belt shield is not exposed to the threshing belt. With very short paddy varieties, exposure of panicles to the threshing belt is therefore short. To overcome this problem of short paddy varieties (IR8, IR24), the diameter of the front threshing belt roller was reduced from 10.16 cm (4 in.) to 7.62 cm (3 in.) and the height of the wire loops was reduced by 1.27 cm ($\frac{1}{2}$ in.). This permitted the use of a smaller, 15.24 cm (6 in.) high, front shield.

The field machine was tested at the IRRI farm and nearby towns of Bay and Calauan (fig.8). Mobility in the softer fields was one of the problems encountered in these tests. The present harvester is heavy and could be used for dry season harvesting. Attempts are now being made to add a half-track system to provide more flotation which would improve field mobility.

Some bulldozing of plants by the threshing belt shield was also observed during the tests. The relative position of the threshing belt shield and the lower gathering bar sprockets was based on the laboratory test unit. With tall and upright varieties, like C-4, the bulldozing effect of the shield was negligible. With dwarf varieties, the bulldozing effect increased and subsequently some panicles were left unthreshed. The front threshing belt roller and its shield was moved forward so that it was vertically in line with the lower gathering bar sprocket. This minimized the unthreshed and scattered grain.

Since the machine is still not equipped with crop-lifting mechanisms lodged plants present a problem in its successful operation. Attempts are now being made to develop simple mechanisms to lift and guide the lodged plants into the stripper. During the trials, overloading of the 7.5 hp tractor engine was observed. The power input of 2.5 hp/ft of harvesting swath seems a little low and may have to be increased. Generally the head stripping type Japanese combines use an average of 4.25 hp/ft of cutterbar. Further development work is continuing on the project.

Drying and processing

Batch drier

A low-cost batch type drier is needed for the small rice farmer in Asia. The drier should be simple enough to be manufactured locally in the countries of the region. Some batch driers are being imported in Southeast Asia from Japan but these are designed for mass production and are difficult to manufacture locally. Their landed price in the Southeast Asian countries are too prohibitive for the small farmers which limits their use. A project was initiated to develop a small batch type drier utilizing some of the experience gained with the use of the imported batch type driers. The following design criteria were considered essential in the development of such a drier:

1. The drier should be low in cost and preferably less than half the price of imported batch type driers marketed in the Philippines. Most Japanese batch type driers are sold at ₱6000 (US$1000) in the Philippines.

2. The design should be suited for manufacturing with the simple production methods available in Southeast Asia and utilize locally available sheet and structural steel sections.

3. The drier should utilize a minimum of imported components to facilitate servicing and spare parts availability in the region.

4. The blower could be driven either with an electric motor or a small gasoline engine.

5. When the blower is driven by an engine, the radiated and exhaust engine heat should be recovered for the drying process.

6. Automatic fuel cut-off safety control should be mechanically operated. Electric power is often not available in rural areas.

7. The burner should use a low-cost, readily available fuel such as kerosene.

8. The burner unit should be easily detachable to permit installation of other types of fuel burners.

9. The drying bin should have a holding capacity of 1 ton paddy.

10. The drier box should be designed for easy dismantling for compact packaging and should be lightweight.

Based on the above specifications, a batch drier was designed (fig. 9). The drier has three basic components -- burner, blower, and grain bin. The kerosene burner is a pot-type, gravity-flow burner which was adapted from the design of a burner used in an imported recirculating type drier. Kerosene is a readily available fuel in most rural areas of Asia. Unlike diesel oil, which requires atomization through a pressurized nozzle, kerosene can be readily burned in an open pot-type burner. The burner consumed an average of 1.8 liters of kerosene per hour providing a drying air temperature of 43°C at an airflow rate of 49.6 cu m/min. The burner capacity can be increased to 3 liters of kerosene per hour when higher temperatures are desired by a stove needle valve provided in the fuel line.

An automatic safety control to cut off the fuel flow, whenever the blower stops, has been provided by a counterweighted vane placed in the blower passage to actuate the fuel valve. If the flame does not reignite after a brief interruption in blower operation, the kerosene flowing through the burner is collected in a container. When this occurs, manual reignition of the burner is necessary.

An airduct has been placed under the burner element to recover the heat radiated and exhausted from the engine.

The belt cover which protects the belt and bearing from excessive heat was made to coincide with the base of the burner to maintain the same airflow. This necessitates tne engine to be located below the blower, otherwise the airflow is reduced from 49.6 cu m/min to 33.6 cu m/min.

The 45.7-cm (18 in.) diameter vane axial blower delivers an airflow of 49.6 cu m/min at 2200 rpm against a static pressure of 2 cm (0.8 in.) water. A 3 hp gasoline engine or a 2 hp electric motor can be used to drive the blower. A canvas duct connects the blower to the grain bin plenum chamber. An air passage area to the plenum chamber is 1.5 times the blower area to minimize friction losses in the curved canvas duct.

The 5.0 sq m (54 sq ft) grain bin can hold a ton of dried paddy at a grain depth of 33 cm (13 in.). The floor consists of three pieces of 0.91 m (3 ft) x 1.83 m (6 ft) steel perforated sheets. Each sheet is individually mounted on a frame. The sides and bottom of the grain bin is made of sheetmetal with angle bar reinforcements. Doors are provided on two sides for unloading of the paddy. The four sides, the bottom, and the three perforated sheets, can be dismantled for compact packaging of the box.

During tests, it was found that the recovery of the waste engine heat raises the air temperature by 4.5°C at an airflow rate of 49.6 cu m/min. This is equivalent to about 13,400 BTU/hr or about 45 percent of the gasoline consumed by the engine or 28 percent of the kerosene consumption.

One ton of paddy was dried from 21 to 13 ±1.5 percent (wet basis) in 5 hours, which is equivalent to an average drying rate of 1.6 percentage points per hour at 43°C air flowing at 32 cu m per min/cu m of grain.

The drier has been released for limited production to two manufacturers in the Philippines. The quotation received from the manufacturers indicate that it would be marketed for ₱2600 (US$400) in the Philippines which is about half the price of comparable imported batch type driers.

Hull furnace

Paddy contains about 20 to 22 percent hulls, which are a waste product of milling. Rice hull has a heating value of 11,000 to 13,000 BTU/kg. Two rice hull furnace designs (figure 10) have been fabricated and are being evaluated for use with the batch drier. The furnace in fig. 10a has a square metal column with a louvered combustion chamber with an opening on all four sides. The hull is stored in a hopper which is directly mounted to the square column. A grate with tilting louvers is installed at the bottom of the square column to retain the hulls and control the flow of ash through the grate. Air is blown by the blower through the burning hull located between the louvered openings and the bottom grate. Any ash mixed with the hot air is separated and settles at the bottom trap. A sheetmetal housing around the furnace recovers the heat radiated from the furnace. Rate of combustion is controlled by the airflow through the hull mass and rate of ash discharge through the vibrating grate.

The furnace in fig. 10b consists of a rectangular fire brick chamber with an angle bar frame mounted on wheels. Fire brick walls divide

the chamber into combustion and settling sections. Continuous feeding and burning of hulls is achieved by a vibrating feeder in the hopper. Air is drawn by the blower through an opening at the other end of the furnace. Air enters through the grate at the bottom of the combustion chamber and passes through the burning hulls to the blower. Rate of combustion is controlled by the air flow and hull feeding rate. Any ash that passes with the hot air is trapped in the settle chamber. Air draft around the furnace due to the blower suction recovers heat losses from the furnace walls.

Preliminary tests indicate that both designs are compatible with the batch drier that has been developed at the Institute. Hull consumption of 5 to 6 kg/hr has been obtained providing drying air temperature of 43°C at 49.6 cu m/min air flow rate.

The two rice hull furnaces will undergo further testing and evaluation before they are released for manufacture.

Direct-flame drier

Work on an experimental direct-flame drier has been reported earlier. To increase its efficiency, a hopper that would utilize the excess heat from the drying chamber was added to the experimental machine. The waste heat from the flame drier was introduced into the grain hopper through inverted-V channels to heat the wet paddy. Preliminary results indicate that the temperature of the ingoing wet paddy increased from 27°C to 71°C. Tests are underway to evaluate the effects of preheating on milled rice quality and thermal efficiency.

Heated-sand drying and parboiling equipment

Previous experiments have indicated that subjecting wet paddy to high temperatures by mixing with heated sand for 15 to 20 seconds results in the gelatinization of the starch granules. This treatment creates an effect similar to parboiling of paddy. It also produces substantial reduction in moisture and an increase in head rice recovery.

The results of tests conducted on an experimental heated-sand machine has been reported previously. The experimental machine was modified to improve heat utilization efficiency. Tests indicated that with a paddy feed rate of 47 kg dry matter per hour, a paddy-sand ratio of 1:25 was obtained in the rotating chamber. With this feed rate, a moisture reduction of 12 percent and a stabilized sand temperature of 204°C was obtained. The heat utilization efficiency was found to be 38 percent.

Further tests on the modified machine was made to study the following:

1. The effect of post-treatment on the sand-treated grain. Two separate samples were taken at the outlet of the machine. The first sample of

hot grain was immediately sealed in bottles while the other sample was spread on a concrete floor for about 30 minutes to cool and then sealed in bottles. Both the immediately-sealed and the cooled samples were shade-dried to 16 percent dry basis before milling.

2. The possibility of removing white bellies from the sand-treated grain. It was observed from samples that conventional parboiling removes white bellies, while sand-processing the paddy does not eliminate all the white bellies from the grain. It was hypothesized that this could be due to low initial moisture contents of the paddy or the short-duration exposure to heated sand. Paddy was therefore soaked for 24 hours and exposed to heated sand for 20, 30 and 40 seconds.

3. Effect of milling time on sand-treated and control samples. Gelatinization of paddy in the sand treatment produces harder grain than in the control. Milling the control and sand-treated samples for the same duration indicated a lower milling recovery for the control. Milling tests were therefore made on the basis of equal bran removal and equal time in the miller between the sand-treated and the control samples.

The following modifications were made to further improve the performance of the machine (fig. 11):

a. The sand pan was enlarged to hold more sand and one side was changed from a circular shape to a straight wall with a 45° angle slope. The sweeping action of the sand sweepers pushed the sand toward one side of the sandpan and the new shape permitted more sand storage. The burners were relocated so that the flame impinged under the area where the sand was accumulated in the pan. Fins with 5.08-cm (2 in.) spacing were provided on the underside of the pan to improve heat transfer.

b. The frame and cover were correspondingly enlarged.

c. All four sides of the firebox were insulated.

d. The sand sweepers and scoops were lengthened to fit the enlarged pan.

Test results indicated that the post-treatments of sealing or spreading the sand-treated grain for 30 minutes resulted in negligible difference in head and broken grain (table 2) when the grain initial moisture contents were higher than 28 percent (dry basis). At low initial moisture level of 23 percent (d.b.), however, a significant difference in the broken grain was observed although the total recovery was not affected. This indicates a need for presoaking paddy prior to the sand treatment to take full advantage of the process.

Soaking paddy for 24 hours and exposing it to heated sand for 20, 30 and 40 seconds did not remove all white bellies in the grain. The presence of white bellies seemed to be enhanced with longer exposure which seems due to the darker appearance of the more translucent grain in the background. The presence of white bellies in the sand-processed rice seems due to incomplete gelatinization. Further attempts to reduce the presence of white bellies will be continued.

Milling recoveries of tests on presoaked paddy samples within the temperature range of 130-195°C yielded negligible variation. The averages of these results are presented in table 3. Comparing the milling results between the sand-treated and the control indicate that for nearly the same amount of bran removal, the average difference in head rice recovery of the sand-treated over the control sample is 8.39 percent. The sand-treated sample took three to six times longer in the mill to remove the same amount of bran as the control. The difference in milling time to attain the same amount of bran removal indicates the hardening due to the gelatinization of the starch granules. Subjecting the sand-treated and control samples to the same time in milling gave the following results: (a) an average of 4.88 percent bran was removed from the sand-treated samples and (b) an average of 16.36 percent more head rice was obtained with the sand-treated samples.

Comparing the test results on the sand-treated rice with samples of regular parboiled rice, it appeared that the presoaked sand-treated paddy, at a temperature range of 150-180°C, appeared to have the most desirable qualities in terms of appearance, translucence, milling recovery, head rice yields, and moisture removal. Further analysis of the data showed that the differences in the total and head rice recoveries of the treated samples within this temperature range are negligible. At this sand temperature range, the average moisture reduction with presoaked paddy is about 20.79 percent (dry basis). Although the high moisture reduction above this sand temperature range is higher, the milled rice color is not uniform and has a darker appearance. Below this sand temperature range, the average moisture extraction is reduced to 15.28 percent dry basis but the color of the rice is uniform. Generally, the sand-treated samples had a better appearance and and looked more desirable than the regular commercially parboiled rice samples procured from many countries in Southeast Asia.

The total sand-holding capacity of the modified pan is 46 kg. However, 9 kg of sand is inside the cylinder while the machine is in operation. Thus the heating time of the recirculating sand in the pan is four times the grain-sand exposure time in the rotating cylinder. Preliminary test results on the modified machine with presoaked paddy indicated that with a paddy feeding rate of 146 kg dry matter per hour, the sand temperature stabilized at 104°C, which was less than the minimum desirable sand temperature level of 150°C. The paddy-sand ratio at this feeding rate was 1:10.3 in the

rotating cylinder. The moisture extraction at this stabilized temperature was 9.72 percent (dry basis). The heat utilization efficiency, however, was increased to 55 percent at this low stabilised sand temperature and low moisture extraction rate. This value is further increased to 65 percent if the moisture removed during cooling of the grain is also included.

The results indicate that with the present machine and rate of heat input, the minimum desirable stabilized sand temperature of 150°C can be attained by reducing the feed rate (which will correspondingly reduce the paddy-sand ratio in the rotating cylinder). One other alternative to increase capacity would be to increase the burner capacity, but this would reduce the heat utilization efficiency. Utilization of the exhaust heat from the machine in preheating the ingoing wet paddy or further drying of the outcoming hot grain from the machine are also avenues to increase machine capacity. Investigations to utilize rice hulls as possible source of fuel are also planned.

Rice milling

Rice milling involves the removal of hulls and bran from paddy grain and results in the production of polished rice. This process can be attained with various equipment ranging from the simple mortar and pestle to modern milling equipment that has been developed in Japan and Europe. Modern rice milling and drying facilities are being introduced in the Southeast Asian countries with well developed road systems to cater primarily to the urban population.

The popular rice milling equipment in most developing countries of Southeast Asia is the simple steel huller-polisher (also known as Engleberg or kiskisan) which produces relatively poor quality rice. In the Philippines, about 55 percent of rice produced is milled with this type of machine. These mills remove the hulls and bran in a single operation. The paddy grain is subjected to excessive pressure and friction which causes heating of the grain and results in low milling recovery and high percentage of broken grains. Power requirement per ton of grain milled is quite high. The machine produces a powdered hull-bran mixture which is sold by mill operators as animal feed. The low milling recovery, excessive breakage, and bran production during milling cause enormous loss of grain to the region. In spite of these undesirable features, the machine has been widely accepted in many Southeast Asian countries due to its low first cost, low maintenance, simplicity, ease of local fabrication, and ability to mill small batches of paddy. To minimize the food loss due to poor milling practices, many governments are banning further installation of steel huller mills. Efforts are being exerted to install large modern rice mills; however, the large investments necessary for the establishment of such mills are

generally not available. A few manufacturers have attempted to develop small milling equipment to replace the steel hullers but have not met with much success.

The agricultural engineering department at IRRI has started a project to explore the possibility of developing a paddy milling machine that would be simple in operation, more efficient, require less power, and easy to fabricate with readily available materials in the Southeast Asian region. Under this project, investigations are planned to study the performance of different types of rice milling machines and to evaluate some new milling concepts.

Tests were made on a commercially available Japanese centrifugal paddy huller which uses a high-priced impact surface for hulling paddy. The possibility of using readily available, low-cost rubber belting, instead of the special plastic impact lining, a proprietary item sold by the manufacturer of the huller, was explored. It was also hypothesized that the centrifugal impact type mechanism could also be used for polishing of paddy by using an abrasive impact surface.

A laboratory centrifugal huller (fig. 12) was fabricated for test purposes. A standard 32-blade plastic impeller from the Japanese centrifugal huller was used in this laboratory machine. The impeller was driven by a 2 hp electric motor through a variable-speed drive pulley. A sheetmetal housing with provisions for changing the linings was made for the impeller. A 2.22-cm spacing was provided between the impeller periphery and the rubber lining. The front face of the huller housing was made of transparent plastic to observe the hulling action and to study the path of the grain in the machine. Paddy was fed from a hopper through an opening in the center of the impeller. A slide gate was provided for varying the feeding rate. The preliminary study[1/] indicated the following results.

The outlet position of the sheetmetal housing has a significant effect on the hulling performance. After a few trials, a "3 o'clock" position was selected which provided good results. This position was similar to the outlet position of the commercially available centrifugal huller. Tests with 0.63-cm ($\frac{1}{4}$ in.) plywood and ordinary rubber flat belting indicated no apparent difference in hulling performance; however, the plywood lining did not last long. The rubber lining performed well and did not show any signs of wear. Tests indicated that increasing speed and number of passes through the machine reduce the amount of unhulled paddy but increase broken rice. Two abrasive impact surfaces, sandpaper and "Safety Walk," were tried to observe their performance for polishing paddy. The "Safety Walk" indicated more uniform polishing of grain and durable life. The life of sandpaper lining was too short for practical application.

[1/] Wikramanayake, V.E.A. Report on a study of centrifugal hulling and milling of paddy. Agricultural Engineering Dept., IRRI. 1972.

Since the feeding rate can have a significant effect on hulling efficiency, another valve to close or open the hopper feed was installed behond the variable slide gate. The impact lining of the laboratory centrifugal huller was changed with a new 4-ply flat belt. The 32-blade impeller was changed with a new 60-blade impeller which the manufacturer has recently introduced in the market. Preliminary trials indicated that for the same feed opening, the air suction at different impeller speeds results in different feed rates. A calibration curve was therefore made for different feeding rates at impeller speeds of 850, 1050, 1250, 1470 and 1650 rpm. The recommended revolution of the commercial centrifugal huller was 1470 rpm. One-kilogram samples were used in the calibration of the feed rate and during the regular test runs. IR24 rice variety with 15.21 percent (dry basis) moisture content was used in the test. A total of 90 samples of 1 kg each were used to study hulling performance at feeding rates of 470, 720, 880, 970, 1230 and 1380 kg/hr for the five rotor speeds. Three test replicates were made at each feeding rate. The hull and bran were removed from the processed sample with a laboratory grain cleaner. The weight of the cleaned paddy-brown rice mixture was determined and their ratio established. Fifteen-gram samples were taken from each replication with a laboratory precision divider. The amount of unhulled paddy, head and broken rice were determined from the 15-g samples.

Tests were also conducted to determine the effect of the number of passes through the centrifugal huller on unhulled paddy and broken rice at 470, 720, and 970 kg/hr feeding rates. These feed rates were selected because they are within the range of the steel huller-polisher mills and the commercially available centrifugal huller. The samples were fed into the huller and the number of unhulled paddy and the broken rice was determined after each pass. The effect of rotor speed and feeding rate on unhulled paddy and broken rice is indicated in figure 13. The figure shows the following:

1. The feeding rate has a significant effect on hulling efficiency. Increased feeding rates increase the amount of unhulled grain.

2. A decrease in broken rice occurs with increased feeding rate.

3. Unhulled grain decreases whereas broken rice increases with increase in rotor speed.

4. The lines representing the unhulled and broken grain for the 470 and 720 kg/hr feeding rate intersected at about 1330 and 1500 rpm, respectively. This indicates the optimum impeller speeds for the two feeding rates. At higher feeding rates of 880 kg/hr, the unhulled and broken grain lines did not intersect within the range of impeller speed used in the tests but these lines came close to intersecting. It can be deduced that 1650 rpm would be an optimum speed for 880 kg/hr feeding rate.

Performance results on multipass hulling from the laboratory centrifugal machine are indicated in f i g u r e 14 for the 470, 720, and 970 kg/hr feeding rates, respectively. The figure indicates an increase in broken grain for each additional pass and increasing rotor speed. As expected, the amount of unhulled grain decreased with each additional pass. The decrease, however, was much higher on the second pass as compared with the third and fourth. The optimum rotor speeds for the second pass at 470, 720, and 970 kg/hr feeding rates were 950, 1030, and 1050 rpm, respectively, as indicated by the intersection of the unhulled paddy and broken rice lines.

Tests will be continued to further verify these results. Tests are also planned to evaluate abrasive linings to investigate the use of the centrifugal huller for rice polishing. A program is underway to test and study other commercially available small rice mills to find ways of improving them or developing more efficient mills for village or community level operations.

TEST AND EVALUATION

Individual-row hopper seeder

During field performance tests of one manufacturer's initial production unit, several problems were encountered. The drive-transport wheel was found to be weak, and some bridging of seeds in the hoppers was encountered. Weight of the seeder with all hoppers filled was 28 kg which required an excessive pulling force and is difficult to lift and reverse direction at row ends.

Bridging of seeds in the hopper was reduced by widening the seed metering rollers to cover the full width of the hopper bottom and by staggering the seed pockets axially to permit the roller to pick seeds from a wider area of the hopper (fig. 15). To reduce the slight scattering of seeds in the row which occurs due to the staggered seed pockets, two guide plates were added under each seed roller. The standard bicycle freewheel, used to provide freewheeling during transport, was eliminated. The wheel was rigidly fixed in the center of a sleeve which connects the two half shafts. The lugs on the drive wheel were reduced from eight to four. The skid was widened by 5 cm and made in two pieces. This widening increased the flotation and breaking the skid into two pieces permitted compact packaging. The handle was shortened to fit the compact package. Seed hopper size was reduced to lessen weight and improve flotation and ease of operation. The current machine weighs 18 kg without seeds.

In further tests, seeding rate varied from 37 to 60 kg/ha depending on length of seed germination time and root growth. No additional operational problems were found. A few units of the modified seeder have been ordered from a local manufacturer for further field evaluation.

Power tiller

The second prototype was subjected to a 100-hour performance and endurance test. We operated the tiller only 1 hour in plowing dry soil and all other operations were on wet or flooded soils where both plowing and harrowing were performed. The machine performed satisfactorily in all field conditions. The 5 hp engine provided adequate power even when the cage wheels were operating in mud 43 cm deep. Several components were found to have inadequate design strength. The time and mode of failure along with suggestions for improvement were submitted to the design and development section. Of primary concern were: (1) twisted cage wheel spokes, (2) cage wheel blade weld failure due to inadequate parent material thickness for good weld strength, (3) inability to keep main drive case bolts tight, and (4) countershaft misalignment in the power train drive.

Two manufacturers submitted their initial production units for evaluation. Each of these tillers incorporated various design modifications from

the original IRRI design to facilitate their production effort. A test fixture (fig. 16) was devised which enabled us to operate the tiller with a harrow continuously without an operator. This accelerated the test effort. Tests were completed on one unit and continued on the second. After 50 hours test on the first unit, the following components required repair and attention:

(1) Broken engine mount
(2) Fatigue failure of right axle shaft weld joint
(3) Broken cage wheel spokes
(4) Deformation of cage wheel lug blades
(5) Oil leaks in first countershaft casing and main drive case lower flange

The test was terminated at 139 hours of operation and the tiller disassembled and inspected. The following components in addition to those previously listed require design improvement:

(1) Holes in cast handle bracket were badly worn.
(2) Hitch pin hole and pin badly worn.
(3) Bearings on the first countershaft were frozen resulting in countershaft wear.

A complete report of all test findings was submitted to the manufacturer with recommendations for design improvement. Upon completion of the test of the second manufacturer's tiller, a similar report will be provided.

Table thresher

Performance and durability test results were reported earlier. Output quality was not satisfactory and a series of tests were conducted to select an optimal design from a variety of proposed modifications.

The cleaning fan is an integral part of the threshing table which imposes a limit on increasing air volume through increased fan rpm. It was also determined that a definite speed relationship exists between the threshing table and the rotating cleaning screen. For this machine, the cleaning screen should turn at one-tenth the threshing table rpm for effective separation.

It was readily apparent from the tests that well dried paddy not only produced more chaff and dirt but the stems and leaves pulled from the operator's grip did not flow over the cleaning screen well. This reduced the separating and cleaning capacity. Table 4 gives the data for the different modifications tested. The power source for all tests was a 3 hp air-cooled engine. This engine has a recommended operating speed of 3200 rpm

and this was set prior to each test under a no-load condition. It is desired to have minimum separation and scatter loss with maximum cleaning quality. The final configuration shown in fig. 17 was selected as meeting this basic criterion. Additional tests at several locations confirmed the selection. This configuration requires only a small change in the manufacturer's tooling and was quickly incorporated into production units.

Grain loss tests - McCormick type threshers

Tests of four machines of different age were conducted to determine separation losses and output purity. These tests were conducted in farmers' fields in Nueva Ecija and Pampanga. Three of the threshers were original imports of 20-25 years ago while the fourth was a 3-year-old locally produced machine. Grain loss was determined by collecting all straw and grain delivered to the straw pile for two minutes. Grain samples were obtained from the clean grain spout to determine output purity. A minimum of two trials was run for each thresher. Total clean grain output for 30 minutes was obtained and used to determine output per hour and percentage loss. Table 5 gives the data for these tests. Output per hour was generally low as crop yields were low due to severe tungro infection. Average annual use, operating procedure, operation, maintenance and repair requirements, labor and other operating costs and problems were obtained. This information was submitted to the design and development section for guidance in the PTO thresher project. Additional tests are planned during the next threshing season and a complete report with associated survey data will be submitted in a subsequent report.

Power tiller survey

A survey to determine average annual use, type of use, operating costs, frequency and type of component failure and availability and cost of repair parts and facilities was conducted. The results of this survey will be used to assist in establishing design parameters for new tillers and other machines. This information is being tabulated with the information collected from the prior power tiller study and will be summarized in a subsequent report.

ECONOMICS OF MECHANIZATION

Small-scale industry study

During the preceding six months, work on the small-scale industry study has been confined to organizational and administrative objectives. A decision was made to delimit the scope of the study to include only firms which are involved in metal fabrication activities. This decision was based upon the relationship which exists between the products which these firms produce and the technology being developed at IRRI.

Work is currently underway to prepare a listing of the firms which will be included in a sample survey. An attempt is being made to include two general criteria in selecting the cross section of participating firms. First, there will be a range in the size of the firms to be included in the survey based on the value of fixed assets and the number of workers employed. Stratification based on this definition of size will allow attention to be given to the issue of capital-labor substitution in the manufacturing process. Second, efforts will be made to include a selection of firms with a wide degree of geographical dispersion. The objectives of this stratification is to allow examination of the differences which exist between firms located in the greater Manila area and those found in provincial locations where product demand is largely rural in origin.

A concerted effort is being made to identify and actively involve a Philippine agency or institution in the study to ensure that the results will have direct operational significance and relevance.

Materials cost survey

Report No. 13 contains a description of the work being undertaken to prepare bills of materials and accompanying cost estimates for each project in the design and development program. To provide price information in the preparation of these estimates, it was necessary to undertake a survey of firms marketing component items used in each design. Thirteen firms were included in the survey which gathered pertinent information on the availability of a wide range of materials including sizes in stock, prices and terms of payment. Data from the survey was tabulated and summarized to provide a standardized cost estimate for each item. These prices have been utilized in the preparation of cost estimates for the multihopper seeder, the small batch type drier, the extendible blade lug wheel, the bellows pump, and the 4-6 hp walking tractor. Information from the survey is made available to interested manufacturers to allow them to select the least-cost sources for the supply of raw materials and to prepare independent cost estimates for their own use.

Retail survey of the agricultural machinery industry

The survey was conducted to determine the type, number, retail cost and features of the power tillers sold in the Philippines during the past two years. This information is employed in establishing baseline cost and performance parameters for hand tractor designs emanating from the project.

There is presently no domestic manufacture of hand tractors in the Philippines. Seven leading firms are importing hand tractors in knocked-down form requiring varying degrees of assembly. An estimated 10 different brands are currently being imported, primarily from Japan. The five firms included in the survey dominate the hand tractor market in the Philippines. Several of the firms reported plans to begin domestic manufacture of power tillers and other equipment. One company has begun selected-component manufacture and report that the hand tractors they are selling contain 25 percent locally made components. All the firms are located in the Manila metropolitan area and utilize both direct sales forces and extensive subdealer organizations and branches to cover the country.

Power tiller sales for the past two years are shown in table 6, along with the corresponding prices for each size of machine. There is some evidence of a significant decline in sales. Compared with over a thousand units per year sold in the late '60s, sales dipped to only 959 units sold during the past two years. Poor sales are largely attributed to the devaluation of the peso in February of 1970 which led to pricing of the power units beyond the financial capabilities of most farmers. Note also the concentration of sales in the 8-10 hp category. It is not clear from this data whether this concentration reflects evidence of a strong effective demand in this size or a manifestation of the models which dealers emphasize in their sales campaigns. An attempt has been made in fig. 18 to evaluate the comparative cost per hosepower among the hand tractors included in the survey. The number of observations is too small to draw any significant conclusions, although there are two interesting features which emerge. First, it is obvious that in the lower horsepower range (4-7 hp) the gasoline-powered machines have a lower investment cost per hosepower. There also appears to be a downward trend in the average cost for this type of machine. Secondly, all tractors in excess of 8 hp are diesel-powered. Note also that as size increases, this category exhibits a decreasing trend in cost per horsepower, although within the size range shown the cost does not reach a level comparable to the gasoline-powered machines. A note of caution should be sounded in interpreting this information. If all costs are included (operating as well as investment), the gap between diesel- and gasoline-powered machines would not appear as wide as illustrated in fig. 18. It is generally acknowledged that operating costs (fuel, repairs and maintenance) for diesel engines are lower per horsepower than those of comparable gasoline

units. In the selection of a power source, a complete enumeration of all costs must be included to arrive at a viable investment choice.

Hand tractors sold are primarily of the tractive type designed to pull plows, comb harrows, and other equipment. Smaller models are invariably equipped with aircooled engines. Lighting systems, side clutches, gear drive, and multispeed shifting transmissions are standard features.

Human energy measurement

Trials to measure energy consumption levels were continued as a part of the design optimization program. Energy measurement tests using cardiac monitoring equipment on subjects operating the low-lift bellows pump were conducted using pump configurations incorporating three different bellows sizes. In addition, the static pumping head was varied from 0.5 to 1.5 m. With the exception of the smallest unit, the tests were conducted using three individuals as test subjects. Table 7 shows the mean values for total output, rate of output, rate of energy expenditure, and energy expended per liter of water pumped.

With the exception of rate of output, the medium-sized pump gave the best overall performance. Although the average output rate obtained from the smallest pump was somewhat higher than the others, this was at the cost of greater energy expenditure resulting from more pumping strokes per unit of output. Operators indicated that the smaller pump did not provide enough resistance on the downward stroke to establish a rhythm during operation. In contrast to this, the largest pump offered excessive resistance on the downward stroke. This required a waiting period as the water was slowly egressed from the pumping chamber. Output on this unit could not be increased even after installing a larger discharge opening.

The medium-sized unit provided reasonably high rates of output over the entire range of pumping heads. Of greater significance was the attainment of a rhythmic motion during operation which helped to minimize fatigue and reduce energy expenditure per unit of output.

Operators complained of some soreness in thigh muscles but this could be due to a lack of both experience with the machine and muscle conditioning for this particular application. The medium-sized unit was subsequently released to the manufacturers for batch production.

A second study was conducted to assess in detail the actual labor and energy requirements for alternative methods of weeding. A major consideration in the design of the investigation was the selection of alternative weeding techniques which would give a comparable degree of effectiveness. An experiment was thus set up involving six weeding treatments in three replicates:

(1) Hand weed once (HW1x)
(2) Rotary weed twice (RW2x)
(3) Power weed twice (PW2x)
(4) 2,4D IPE followed by rotary weeding
(5) 2,4D IPE followed by power weeding
(6) 2,4D IPE

Table 8 shows the labor and energy costs associated with each technique. Also shown in the table is the effectiveness of each method, measured by the weight of weeds left in the field. The labor input for each method, particularly handweeding, is quite low because of the low weed population in the experimental plots. The relative values, however, are quite comparable with the results of other investigations.

Weed control using granular herbicide is the least expensive method from the standpoint of both labor and energy cost. It is also the most effective weed control measure. Note, however, that compared with manual weeding the application of the herbicide requires more energy per unit of time. This indicates that it is a more strenuous task. This may be due to the fact that the individual has to walk continually while broadcasting the herbicide. The hourly calorie requirement for power weeding (which also requires continuous motion) as compared to that of rotary weeding seems to substantiate this observation.

Weeding with the manual push type rotary weeder appears to be the least efficient in terms of energy cost. Again the minimal weed population in the plots might have introduced some bias in the results. Although the total energy cost and labor input on the power weeder is lower than for the manual rotary weeder, this is at the expense of less effective weeding.

The rates of energy consumption indicate that simply walking in mud requires a considerable amount of energy. Trials are being planned to measure the actual energy involved. This will provide an indication of the net energy input in operating a machine apart from that an individual spends in simply propelling himself.

Economic studies of rice processing systems

Economic research to determine the efficiencies, cost structure, and income levels of alternative rice processing systems in the Asian region continued during the reporting period. The objectives are to quantify the economic and operational parameters of existing systems and to determine the scope for technological improvements in the constituent elements of the systems.

Examination of the rice processing industry in the Philippines indicates a wide variety of systems are presently in use. Figure 19 illustrates a selected number of the many alternatives available. Processing methods can generally be categorized into three broad groupings. The first is the Engleberg huller or "kiskisan" method, representing one of the oldest mechanical milling methods in widespread use. There are an estimated 7 to 8 thousand of these units currently in operation, representing approximately 53 percent of the nation's milling capacity (fig. 20). A second widely employed method, known as the cono or under-run disk sheller mill, represents the major source of commercially milled rice in the Philippines. While fewer in number than the kiskisans, the conos are usually higher in capacity and produce a superior product. The newest technology is the rubber roller sheller. In contrast to the two methods mentioned previously, the component equipment which make up rubber roller installations is entirely imported. As a result, investment requirements for this technology are high and, in spite of the fact that it gives the highest recovery rate, it is not a widely accepted method in the Philippines.

Figure 21 demonstrates the estimated relative recovery efficiency of the three milling systems. Despite the fact that recovery is low and the percentage of broken grains is high, the kiskisan persists as a dominant and pervasive technique. Low investment costs, ease of operation and maintenance, widespread local manufacture and the ready accessibility of these installations to rural households provides a partial explanation of their continued viability. Another reason for continued reliance on the kiskisan is found in the lack of suitable alternatives which provide the same economies at the low annual output levels at which these mills operate. Comparing the average total cost curves for kiskisan and cono installations shows a decided advantage for the kiskisan in the lower output range (figs. 22 and 23). Where the demand for milling services is large and the utility of close proximity to end users is not a consideration, cono installations will produce milled rice more economically.

There is evidence that considerable scope exists for improvements in rice processing systems, particularly in small and medium-scale operations. The introduction of improved equipment and methods which will reduce losses incurred from poor drying, storage, hulling, polishing and distribution can have a significant quantitative impact on the amount of rice available for consumption.

Work will continue to identify the elements within the processing system which embody high potential payoffs to investments in design and development activities under the contract.

SUBCONTRACT DEVELOPMENT, EXTENSION, AND TRAINING ACTIVITIES

Subcontracts

During the reporting period negotiations were completed and a subcontract agreement signed with the Institute of Agricultural Engineering and Utilization, Ministry of Agriculture and Forestry, Government of Korea. This agency has primary responsibility for evaluating all agricultural equipment designs utilized in Korea. Models of the table thresher and single-hopper lowland seeder have been sent for testing.

Agencies currently engaged in the international test and evaluation program are as follows:

1. India	All-India Coordinated Rice Improvement Project (AICRIP), Rajendernagar, Hyderabad 30
2. Indonesia	Directorate of Techniques, Djl. Ragunan, Pasarminggu, Djakarta
Cooperators:	Institute Pertanian Bogor, Djl. Gunung Gede, Bogor, and Gadjah Mada University, Jogjakarta
3. Korea	Institute of Agricultural Engineering and Utilization, Ministry of Agriculture & Forestry, Suwon
4. Malaysia	Malaysian Agricultural Research and Development Institute (MARDI), Jalan Swettenham, Kuala Lumpur
5. Taiwan	Joint Commission on Rural Reconstruction (JCRR) Nanhai Road, Taipei
Cooperator:	Taiwan Agricultural Research Institute, Roosevelt Road, Section 4, Taipei
6. Thailand	Engineering Division, Rice Department, Ministry of Agriculture, Government of Thailand, Bangkok
7. Pakistan	Ford Foundation, Islamabad

Discussions are underway with potential cooperators in Bangladesh, Ceylon, Nepal, and Vietnam.

Small-scale machinery project

Contract personnel continued to assist in the NSDB test and evaluation program for agricultural equipment in Central Luzon. This project, which is funded by the Philippine Government, has thus far purchased and

employed 20 table threshers, 10 lowland seeders, and 2 grain cleaners. Results from project testing activities have been extremely useful in detecting design features which are unacceptable and in need of further refinement. A series of evaluation surveys have also been conducted to elicit information from farmers for use in upgrading existing designs and defining areas where improved technologies may potentially make an impact.

A request that activities under the project be continued has been submitted to the National Science Development Board.

Training

Four engineers representing subcontract project activities in India, Indonesia, and Thailand underwent two-month orientation and training programs in the Engineering Department. They are as follows:

1. Panya Laknanurak	421 Pipitprasart Road Nakorn Pathom, Thailand
2. Abdul Hamid	Mekanisasi Pertanian Pasarminggu, Djakarta, Indonesia
3. Buyyala C. Babu	Rice Project, Rajendernagar Hyderabad 30, India
4. Syed F. Quader	Rice Project, Rajendernagar Hyderabad 30, India

WORK PLAN

JULY 1, 1972 TO JUNE 30, 1973

4-6 hp power tiller

The third prototype was completed with the necessary revisions. Two manufacturers are now building their revised prototype machines which will be evaluated at the Institute. On the successful field evaluation of the tiller, the design will be released for regular commercial production. A few machines will be ordered from local manufacturers for evaluation in other countries through cooperating agencies.

Multihopper seeder

A few individual-row seeders were received from the local manufacturer. These machines have been evaluated and some design changes have been recommended. Additional machines are expected from the local manufacturer. These machines will be field tested and on a satisfactory evaluation, additional units will be procured and sent to subcontracting agencies for evaluation in other countries.

Upland seeder

The design of an upland seeder has been reported previously. The design will be modified to facilitate fabrication. A few seeders will be ordered from interested manufacturers in the Philippines. On a successful field evaluation of these seeders, additional machines will be procured for evaluation in other countries through the cooperating subcontracting organizations.

Multicrop axial-flow thresher

Fabrication of the second prototype of the throw-in thresher with the necessary improvements is in progress. A belt feeder will be installed to uniformly feed paddy which can increase threshing output. The thresher will be field tested at the Institute and in neighboring areas. If the tests prove satisfactory, the design will be released to local manufacturers for trial production.

PTO thresher

The second prototype PTO thresher is currently under fabrication. Attempts have been made to incorporate many new design features in this machine to provide cleaner grain and higher threshing output. Weight reduction and design simplification are two objectives in the

design of the second prototype machine. Long-duration field tests are planned in the Central Luzon area to assess this machine's performance along with the McCormick type threshers that are popular for custom threshing. If the machine proves satisfactory, it will be released for commercial production in the Philippines.

Stripper harvester

The problem of field mobility encountered during earlier tests will receive priority attention during the next few months. Attempts will be made to incorporate a half-track system to the drive wheels to increase the ground contact area. A new type of lifting fingers for lodged plants will be designed and installed in the laboratory test unit for evaluation. If these fingers perform well, these will be installed on the field machine. Extensive field trials on both standing and lodged crops will be done to investigate field loss in stripper harvesting. The last phase will be concentrated on the development of a simpler power train and use of a more powerful engine.

Direct-flame drier

Further studies to establish the effect of different variables (exposure time, flame temperature, initial paddy moisture levels, milling yields, moisture removal, etc.) on the performance of the experimental drier with pre-heater will be conducted. Possibilities for utilizing other types of fuels in place of the LPG would be investigated. Attempts will be made to develop a direct-flame drier for commercial production of about half-ton per hour capacity.

Rice hull furnace

The two rice hull furnace designs will be evaluated for their compatibility with the axial fan and flat drier bin that have been developed earlier. On a successful completion of the test and evaluation phase, the design will be released for limited production in the Philippines.

Heated-sand drying and parboiling machine

The experimental laboratory machine can dry and parboil presoaked paddy at the rate of 146 kg dry matter per hour. Attempts will be made to increase the capacity and thermal efficiency by utilizing exhause heat for preheating the ingoing wet paddy or for further drying of the outcoming hot grain. Possibilities of utilizing rice hulls and other fuels will be investigated.

Paddy milling research

Research studies on rice milling will be continued in an effort to find an economical replacement of the Engleberg type rice mills which are currently popular for village and country level operations in Southeast Asia. The experiments on studying the operations and characterisitcs of the centrifugal huller and its possibilities for use as a polishing device will be continued. Other types of small rice mills will be evaluated for either improving their existing designs or in providing the necessary background information for developing new rice mills. Work on evaluating new milling concepts will be continued.

Transplanters

Studies on time, labor and cost input for hand transplanting and new commercial mechanical transplanters will continue. Information and analysis of data obtained will be used to prepare design specifications and cost limits for transplanter development.

Subcontract test activities

Various machines are under test in eight countries. Assistance in resolving problems encountered, improving and expanding their test and evaluation programs will be continued. Information and data derived from these programs will be used to improve the machines tested and develope specifications for new machine designs.

Commercial machinery evaluation

Imported equipment for the various production operations has attained limited acceptance. Several machines of local design and manufacture are available but receive limited market acceptance. An evaluation of these machines' performance characteristics and cost for tropical agricultural production will be made. Evaluation of data from these studies will be used in formulating recommended design specifications and performance characteristics for new machines and assisting manufacturers in improving the machines currently available.

Small-scale industry study

Arrangements will be completed for the implementation of a field survey of small- and medium-scale metal fabricating firms in the Philippines. A stratified sample based on firm size and geographic dispersion

plus a number of intensive case studies of individual firms will provide the basic data from which an analysis of the industry will be drawn.

Grain losses

The major objectives of this study are to assess the factors which influence the occurrence of quantitative losses, to relate losses to the methods and equipment used by local farmers, to determine the optimum time of harvest to obtain maximum grain yield and/or income, and to define a modified method of handling materials which will minimize grain losses.

Rice production task studies

Task studies will be continued to assemble and update input-output data and economic information on all tasks in the rice production and processing sequence. Included will be continued energy measurement trials with cardiac monitoring equipment which will be carried out as a component of design optimization.

Rice milling and processing

Research will be continued to ascertain the technical and economic characteristics of small- and medium-scale rice milling and processing plants in the Philippines. The major objectives of this study will be to determine the milling efficiency of different types and sizes of processing plants, to assess the economic structure of milling operations, and to compare currently utilized technologies with modern, improved processing methods.

Custom tractor operations

A field survey will be undertaken in Central Luzon to collect information on the use of four-wheel tractors utilized for custom operations. Particular emphasis will be laid on an assessment of the nature and extent of operations which these tractors perform. Data describing custom rates, extent of annual use, ownership patterns, technical problems and costs of operation will be gathered.

PERSONNEL LIST

Personnel and their respective man-months engaged on the project during the past six months, January 1 to June 30, 1972, and projected requirements, July 1 to December 31, 1972:

Position	Name	Fr: 1- 1-72 To: 6-30-72	Fr: 7- 1-72 To: 12-31-72
Development Engineer & Project Leader	A. U. Khan[a]	4.5	4.5
Agricultural Economist	B. Duff	6	6
Evaluation Engineer	F. Nichols	6	6
Assistant Design Engineer (Machinery)	P. Cabanos	2	0
Assistant Design Engineer (Machinery)	J. Policarpio	6	6
Assistant Design Engineer (Processing)	A. Manalo	6	6
Research Asst. (Engineering)	J. Arboleda	6	6
Research Asst. (Engineering)	E. del Rosario	6	6
Research Asst. (Engineering)	N. Navasero	6	6
Research Asst. (Economics)	N. Orcino	6	6
Research Asst. (Test & Evaluation)	C. Padolina	6	6
Research Aide (Economics)	I. Estioko	6	6
Research Aide (Economics)	B. Samson	6	6
Research Aide (Test & Evaluation)	B. Ramos	6	6
Draftsman	F. Cabrales	6	6
Draftsman	B. Buan	6	6
Secretary	V. Maraan	6	6
Secretary	C. Jizmundo	6	6
Shop Foreman	S. Gutierrez	6	6
Machinist	Z. Borja	6	6
Machinist	A. Dizon	6	6
Tinsmith	E. Dungo	6	6
Tinsmith	R. Santos	6	6
Welder	A. Barot	6	6
Mechanic-Operator	J. Silos	5.5	0
Shop Mechanic	R. Dignadice	6	6
Shop Mechanic	M. Macatangay	6	6
Shop Mechanic	P. de Mesa	6	6
Shop Mechanic	F. Flores	6	6
Laborer (Shop helper)	M. Castro	6	6
Laborer (Student assistant)	L. Lumang	6	6
Laborer (Student assistant)	D. Guevarra	5	0

[a] Three-fourths time charged to the Contract.

Table 1. Performance of the PTO driven thresher.

	Trials				
	1	2	3	4	5
Test duration (min)	1.75	1.78	2.0	2.56	1.58
Variety	IR-24	IR-24	IR-24	IR-20	IR-20
Total output (kg)	23.00	22.80	25.70	52.35	31.90
Average purity (%)	96.2	96.0	95.2	94.0	96.9
Loss: Straw (kg)	0.22	0.27	0.07	0.21	0.31
(%)	0.97	1.20	0.27	0.40	0.98
Chaff (kg)	0.35	0.71	0.95	0.69	0.52
(%)	1.54	3.09	3.68	1.31	1.62
Blower rpm	1340	1340	1340	1340	1340
PTO rpm	540	540	540	540	540
Straw thrower rpm	540	540	540	540	540
Straw paddle rpm	540	540	540	540	540
Grain moisture content (%)	29.0	29.0	29.0	32.0	32.0
Straw moisture content (%)	75.0	75.0	75.0	75.0	75.0
Grain-straw ratio	0.7	0.7	0.7	0.61	0.61
Threshing capacity (cav/hr)	17.87	17.42	17.48	27.70	27.46

Table 2. Effect of sealing and spreading for 30 minutes of sand-dried paddy on total and broken rice recoveries.

Initial moisture content (% d. b.)	Variety	Sand temp. (°C)	Recoveries (%)					
			Total			Head rice		
			Sealed	Spread	Diff.	Sealed	Spread	Diff.
23.35	IR747	185	71.97	71.20	0.77	61.09	51.39	9.70
23.35	IR747	166	72.11	71.31	0.80	66.24	30.64	35.60
23.35	IR747	151	72.10	70.05	2.05	64.19	17.04	47.15
23.35	IR747	144	71.74	69.68	2.06	63.49	14.56	48.93
28.67	IR747	193	73.38	73.58	-0.20	65.09	63.55	1.54
28.67	IR747	178	73.50	73.09	0.41	66.66	63.95	2.71
28.67	IR747	167	73.12	74.12	-1.55	68.58	65.58	3.00
28.67	IR747	140	72.83	73.62	-0.79	68.30	65.52	2.78
33.71	IR1572	161	73.97	74.11	-0.14	70.64	70.48	0.16
33.71	IR1572	138	73.63	73.94	-0.31	69.66	70.42	-0.76
42.31	IR5	188	72.37	72.38	-0.01	65.34	64.05	1.29
42.31	IR5	154	72.24	72.46	-0.22	64.16	64.53	-0.37
42.31	IR5	140	72.30	72.11	0.19	64.03	62.56	1.47

Table 3. Milling recovery comparison on bran removal and brokens between the sand-dried and control samples.

Variety	Initial moisture content (% d.b.)	Treatment	Brown	Total	Diff.	Head
C-4	50.66	S.D. 139-186°C[a]	78.68	73.36	5.42	70.76
		Control 10/10[b]	78.40	72.40	6.00	62.76
		Control 30/30	78.08	69.36	8.72	51.84
C-4	48.29	S.D. 139-195°C	78.68	73.37	5.31	70.93
		Control 10/10	78.40	72.56	5.84	62.92
		Control 30/30	78.24	68.80	9.44	56.32
C-4	46.61	S.D. 130-192°C	78.55	73.20	5.35	70.70
		Control 10/10	78.48	72.52	5.96	62.76
		Control 30/30	78.42	69.60	8.82	56.56
IR-24	43.41	S.D. 132-152°C	78.36	74.38	3.98	71.55
		Control 5/5	77.68	74.60	3.08	64.68
		Control 30/30	77.79	67.87	9.92	55.87
IR-24	40.86	S.D. 131-176°C	78.35	74.20	4.12	71.34
		Control 5/5	78.60	75.60	3.00	66.80
		Control 30/30	78.27	68.24	10.03	55.60
IR-24	42.59	S.D. 137-188°C	78.19	74.05	4.15	69.82
		Control 5/5	77.60	73.68	3.92	62.96
		Control 10/10	77.44	66.48	10.96	53.89
IR-24	49.03	S.D. 133-179°C	77.54	73.69	3.85	68.73
		Control 5/5	76.16	72.00	4.16	56.58
		Control 10/10	76.37	68.00	8.37	50.95
IR-24	48.80	S.D. 134-174°C	77.77	73.89	3.88	69.55
		Control 5/5	76.80	72.16	4.64	56.80
		Control 10/10	76.80	68.00	8.80	51.47

[a] Average of sand-dried (S.D.) paddy samples within the given temperature range that was milled in the laboratory mill for 30/30 seconds polisher time.

[b] The first number represents the time (sec) that the laboratory polisher was operated with weight and the second represents the time that the polisher was operated without weight.

Table 4. Test results of table thresher with modifications.

Modifications*	Air control	Table rpm	Screen rpm	Test duration (min)	Output (kg/test)	Scatter loss (%)	Separation loss (%)	Purity (%)	Grain moisture (%)
Overspeed	Open	240	28	4.8	300	1.3	6.9	96.1	26.5
Standard fan	Closed	-	-	-	-	-	-	-	-
Standard speed	Open	220	22	2.3	280	1.8	6.8	98.8	17.4
Modified fan	Closed	220	22	2.1	280	1.3	5.5	95.8	17.4
Overspeed	Open	240	28	1.1	267	4.1	5.3	98.2	19.0
Modified fan	Closed	240	28	1.0	306	3.7	2.7	96.5	18.7
Spiral-screen clearance $\frac{1}{2}$" Screen position at half fan height	Open	290	28	14.0	292	0.3	27.8	97.0	30.8
	Closed	290	28	14.0	229	0.2	17.8	94.0	32.0
Spiral-screen clearance $\frac{3}{8}$" Screen above fan opening	Open	290	28	6.5	320	1.1	14.0	97.5	18.0
	Closed	-	-	-	-	-	-	-	-
Spiral-screen clearance $\frac{1}{8}$" Screen above fan opening Tray 1" clearance below screen	Open	290	28	10.0	200	1.4	18.3	98.0	28.0
	Closed	290	28	2.5	92	1.8	11.3	91.7	28.0
Spiral-screen clearance $\frac{1}{2}$" Screen position at half fan height Tray extended 1" from screen edge	Open	290	28	20.0	125	0.7	8.8	98.0	21.0
	Closed	290	28	15.0	100	1.5	7.6	96.0	21.0
Uniform spiral-consistent screen clearance $\frac{1}{8}$" Uniform screen 1" below fan top Tray extended 1" from screen edge	Open	290	28	4.0	300	0.5	7.0	98.0	15.7
	Closed	290	28	3.0	250	0.5	4.0	85.0	15.7
Uniform spiral-consistent screen clearance $\frac{1}{8}$" Uniform screen 1" below fan top Tray extended $\frac{1}{8}$" from screen edge	Open	290	28	6.8	267	0.06	7.2	99.0	20.8
	Closed	290	28	10.2	300	0.04	4.9	94.0	20.8

*See figure 17.

Table 5. Results of tests on four McCormick threshers.

Test no.	Test duration (min)	Cylinder rpm	Blower rpm	Paddy Output (kg/hr)	Moisture content (% w.b.)	Grain loss (%)	Purity of grain (%)
1	2	840-850	850	2790	16.5	6.5	97.0
2	2	860	690-700	2142	12.0	8.4	96.5
3	2	870-880	600-620	3745	14.0	7.0	97.5
4	2	850	690	1829	11.2	10.67	96.0

Table 6. Power tiller sales, Philippines, 1970-1971.

Horsepower	Fuel	Sales	Price (Pesos)*
6	Gasoline	83	5,000
7	Gasoline	-	5,500
8	Diesel	557	11,000
9	Diesel	28	10,000
9.5	Diesel	147	13,500
10	Diesel	86	10,000
11	Diesel	-	11,000
12	Diesel	58	16,000
14	Diesel	-	13,000
TOTAL		959	

*Rounded to nearest ₱500.

Table 7. Results of tests on the low-lift bellows pump, IRRI, 1972.

Item	Bellows Size			
	Small[1]	Medium	Large I	Large II[3]
0.5-m head				
Time, min	75.00	58.30	60.70	60.00
Output, lit	10,092.00	8478.67	8700.00	6612.00
Lit/min	134.60	151.77	143.40	110.20
K-cal/min	6.89	4.31	5.95	4.72
K-cal/lit	0.05	0.03	0.04	0.04
1.0-m head				
Time, min	60.00	70.00[2]	60.00	60.00
Output, lit	9445.00	8417.50	5786.67	6355.00
Lit/min	157.40	119.40	96.43	105.92
K-cal/min	9.05	4.92	4.64	4.72
K-cal/lit	0.06	0.04	0.05	0.04
1.5-m head				
Time, min	60.00	66.00	60.00	60.00
Output, lit	5890.00	5838.33	3823.30	4650.00
Lit/min	98.20	88.33	63.70	77.50
K-cal/min	7.82	4.62	3.76	4.92
K-cal/lit	0.08	0.05	0.06	0.06
Average				
Time, min	65.00	64.00[2]	60.20	60.00
Output, lit	8475.67	7473.25	6103.33	5872.33
Lit/min	130.07	119.89	101.17	97.87
K-cal/min	7.92	4.58	4.78	4.79
K-cal/lit	0.06	0.04	0.05	0.05

[1] One observation.

[2] Two observations.

[3] Modified to incorporate larger discharge orifice.

Table 8. Labor input, human energy requirement, and effectiveness of alternative weeding methods, IRRI, 1972.

Weeding method	Man-hr/ha	K-cal/man-hr	K-cal/ha (1×10^2)	Weed weight ($gm/0.2m^2$)
Handweed, once	65.93	335.40	221.12	78.27
Rotary weed, twice	59.59	380.80	227.40	90.30
Power weed, twice	25.36	464.88	118.26	146.73
2,4D IPE fb RW	32.33	-	134.39	56.83
2,4D IPE fb PW	12.04	-	53.25	63.33
2,4D IPE	1.90	360.00	6.84	22.83

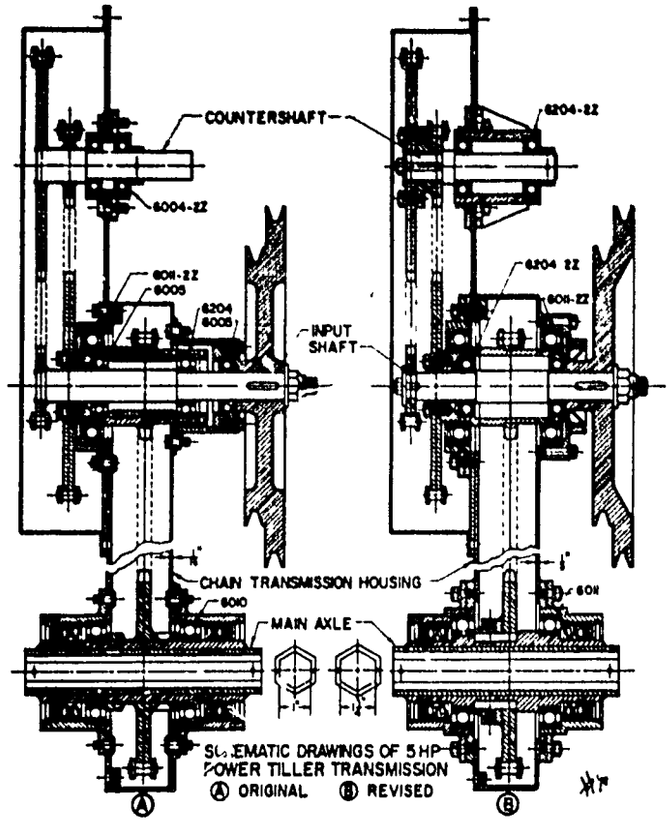

Fig. 1. Schematic diagram of 5-hp power tiller transmission.

Fig. 2. Third prototype power tiller.

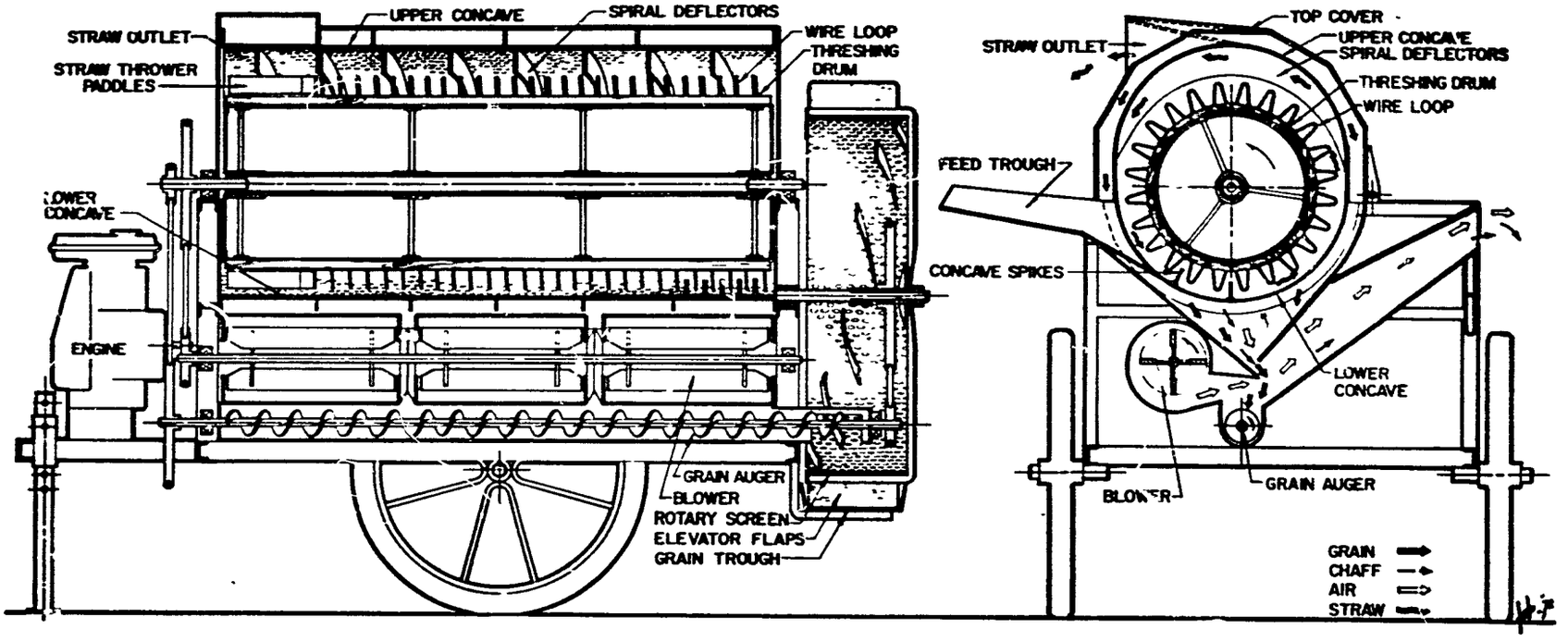

Fig. 3. Schematic drawing of the axial-flow thresher.

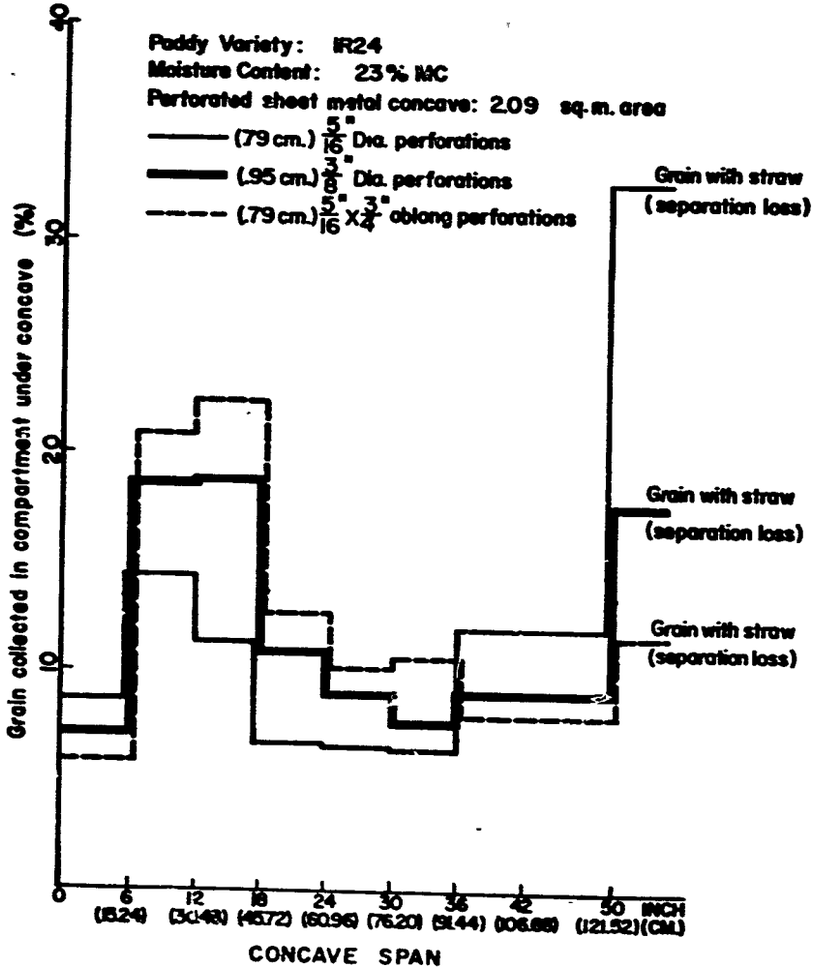

Fig. 4. Grain separation in the axial-flow thresher with 3 types of concave screen.

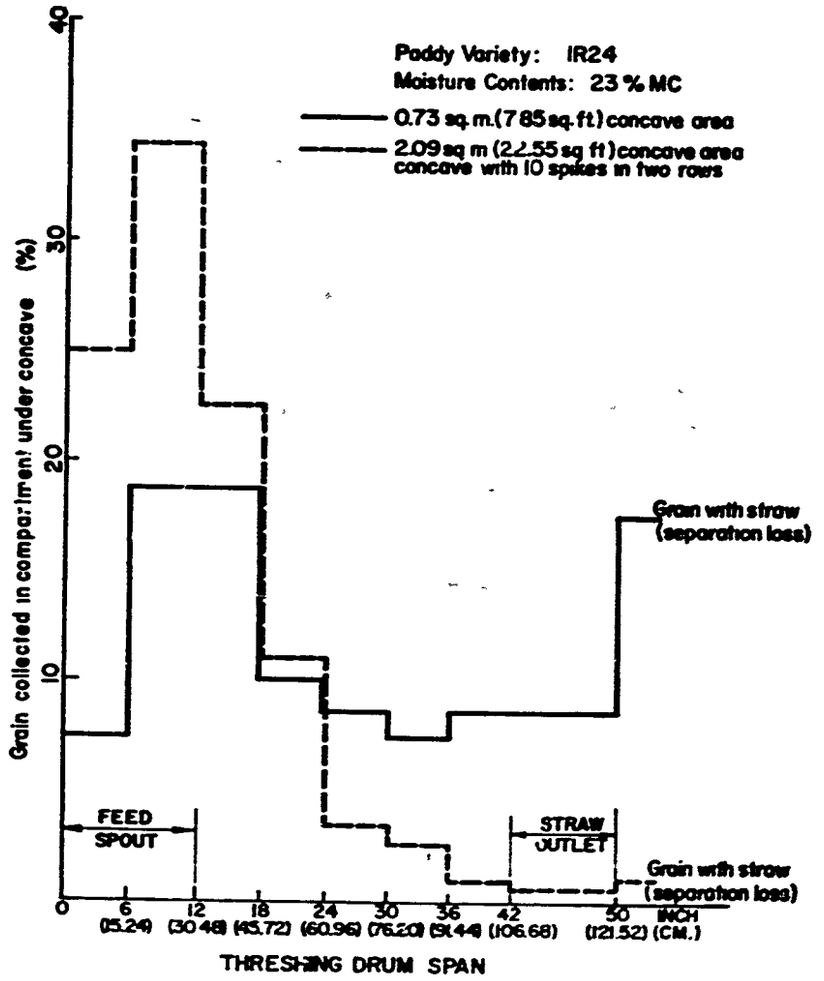

Fig. 5. Effect of concave area and spikes on grain separation with axial-flow thresher.

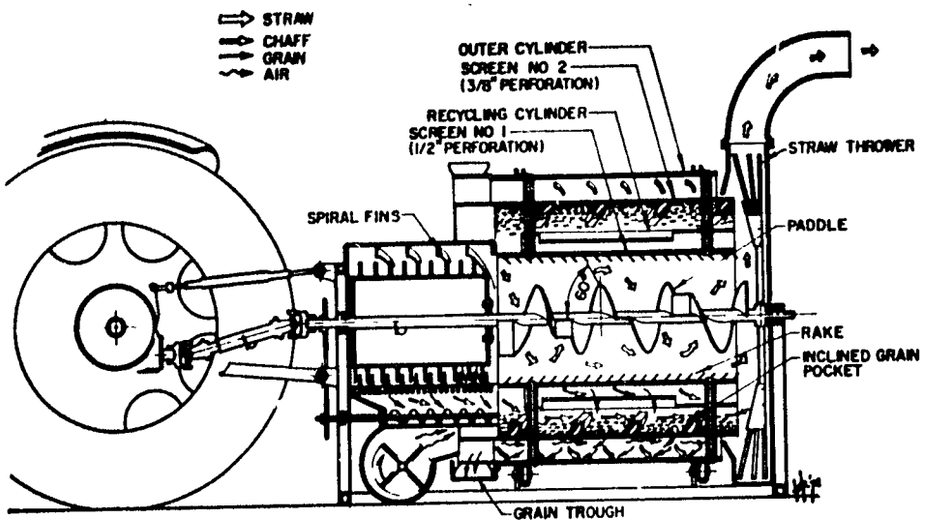

Fig. 6. Schematic drawing of the modified tractor PTO driven thresher.

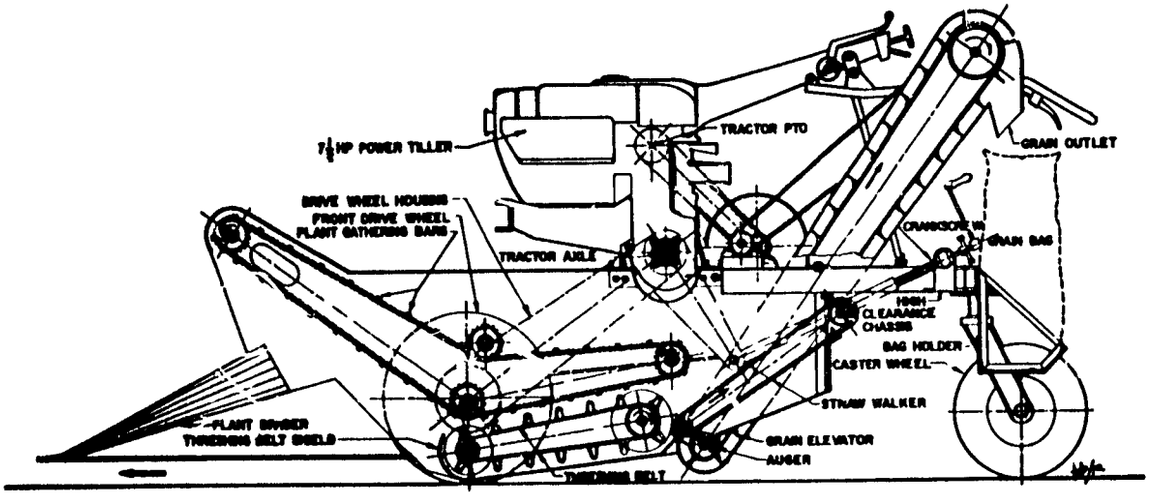

Fig. 7. Schematic drawing of stripper-harvester.

Fig. 8. Second prototype paddy stripper harvester.

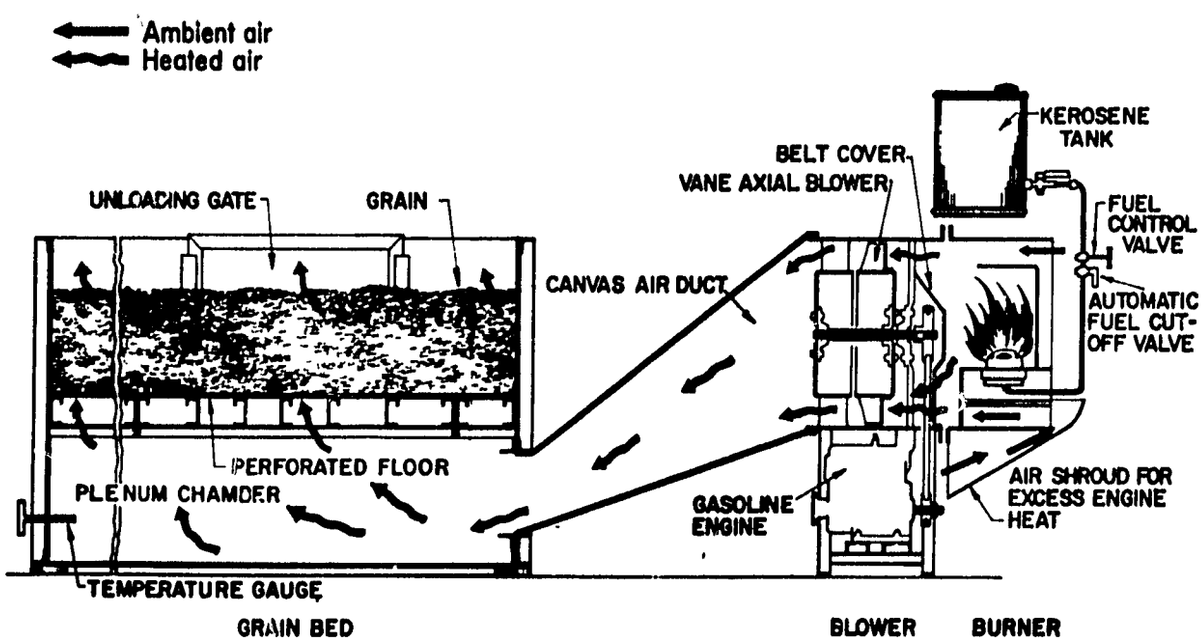

Fig. 9. Schematic drawing of batch type grain drier.

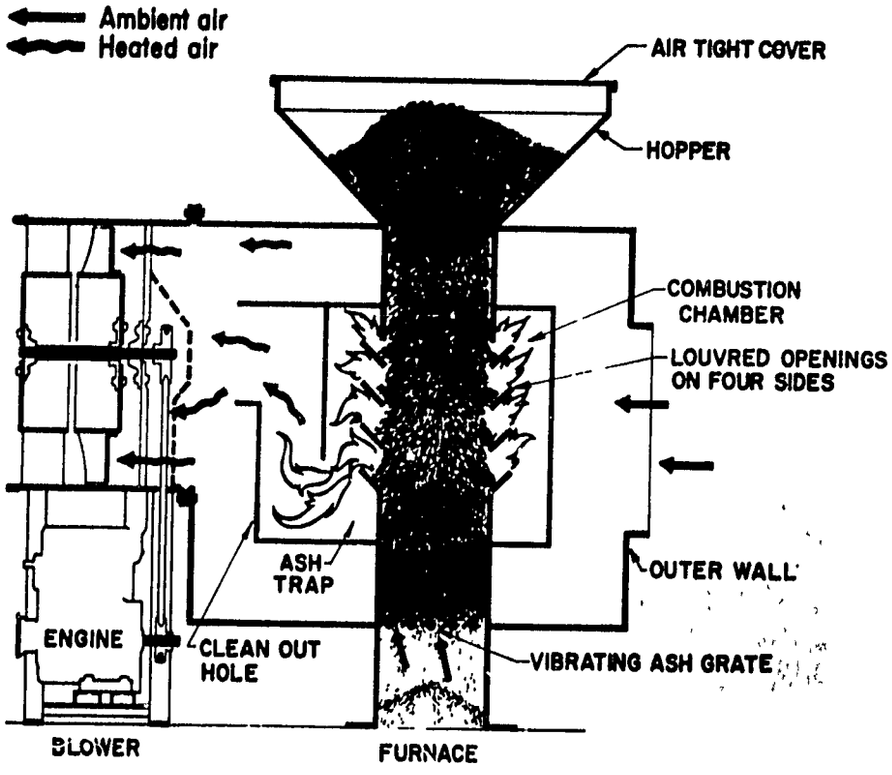

(a)

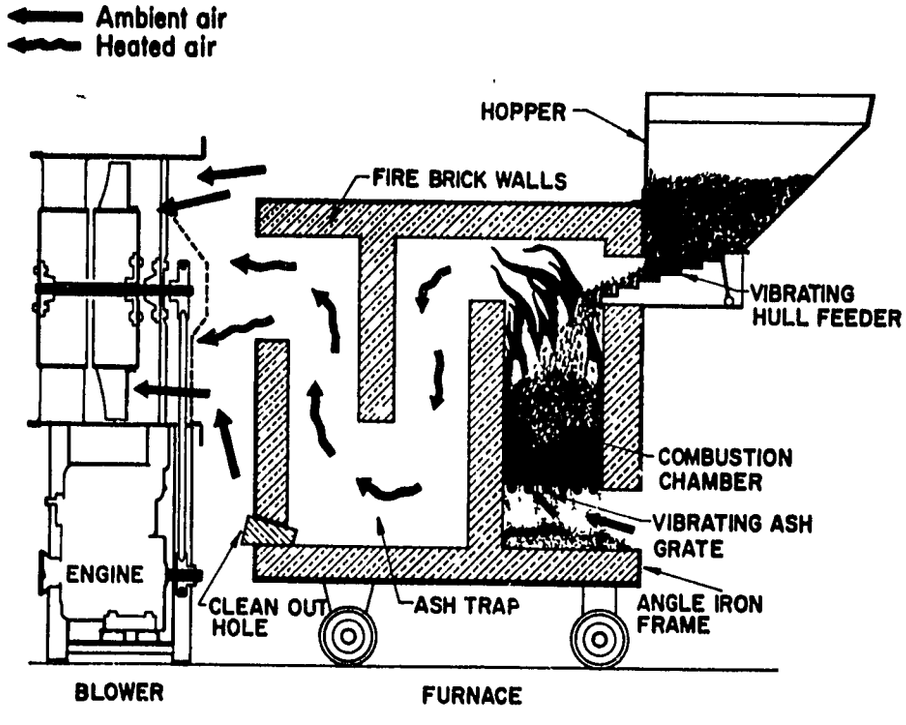

(b)

Fig. 10. Schematic drawings of rice hull furnace.
a) Louvered columnar type b) Fire brick type

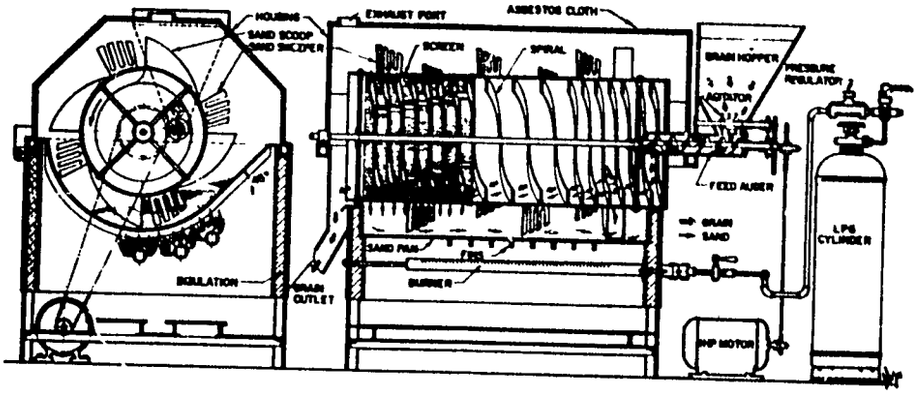

Fig. 11. Schematic drawing of the modified continuous flow heated-sand drying and parboiling machine.

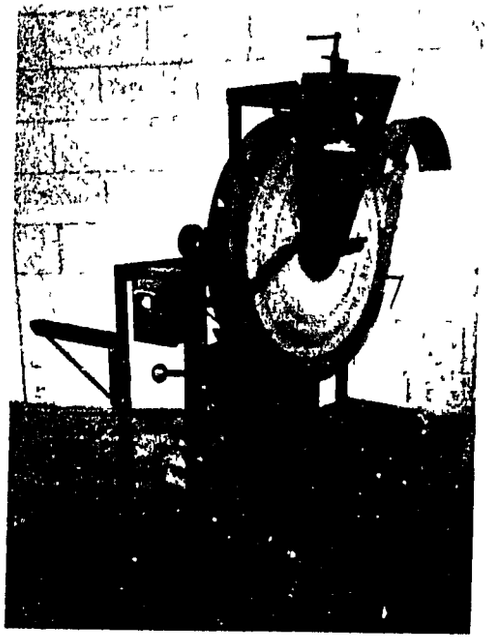

Fig. 12. Laboratory centrifugal huller.

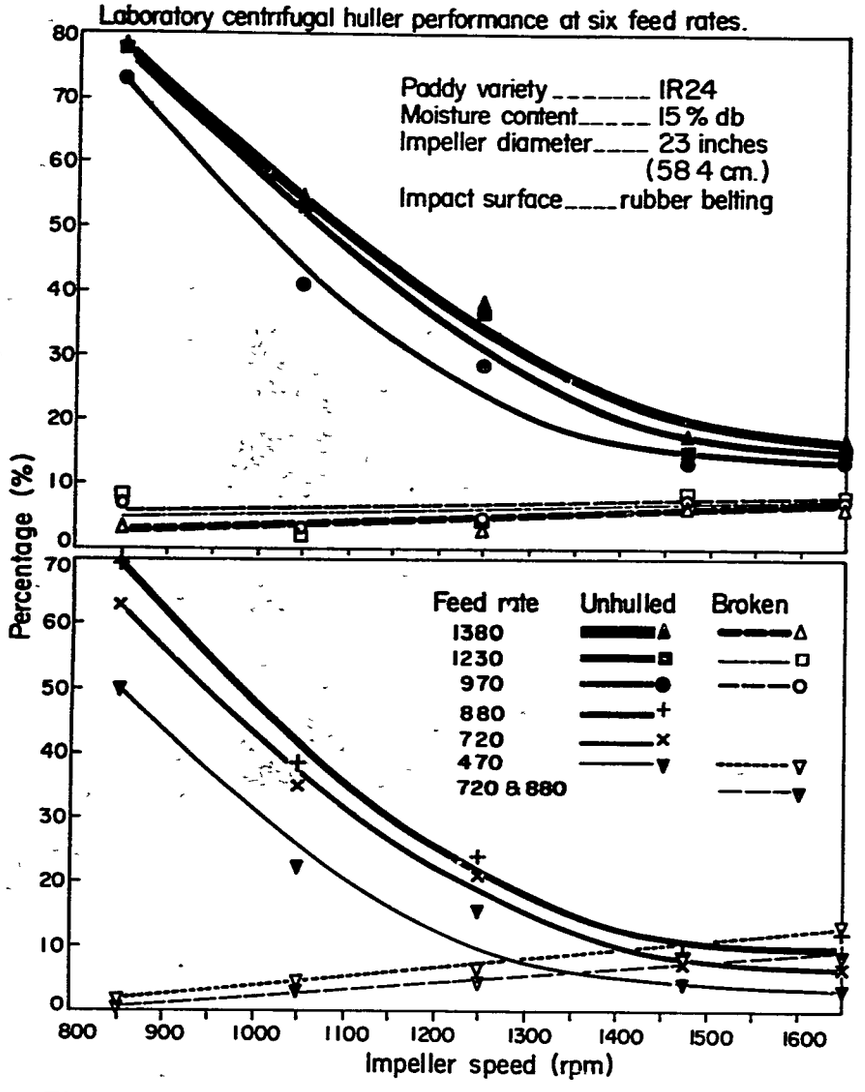

Fig. 13. Effect of impeller speed and feeding rate on unhulled paddy and broken rice.

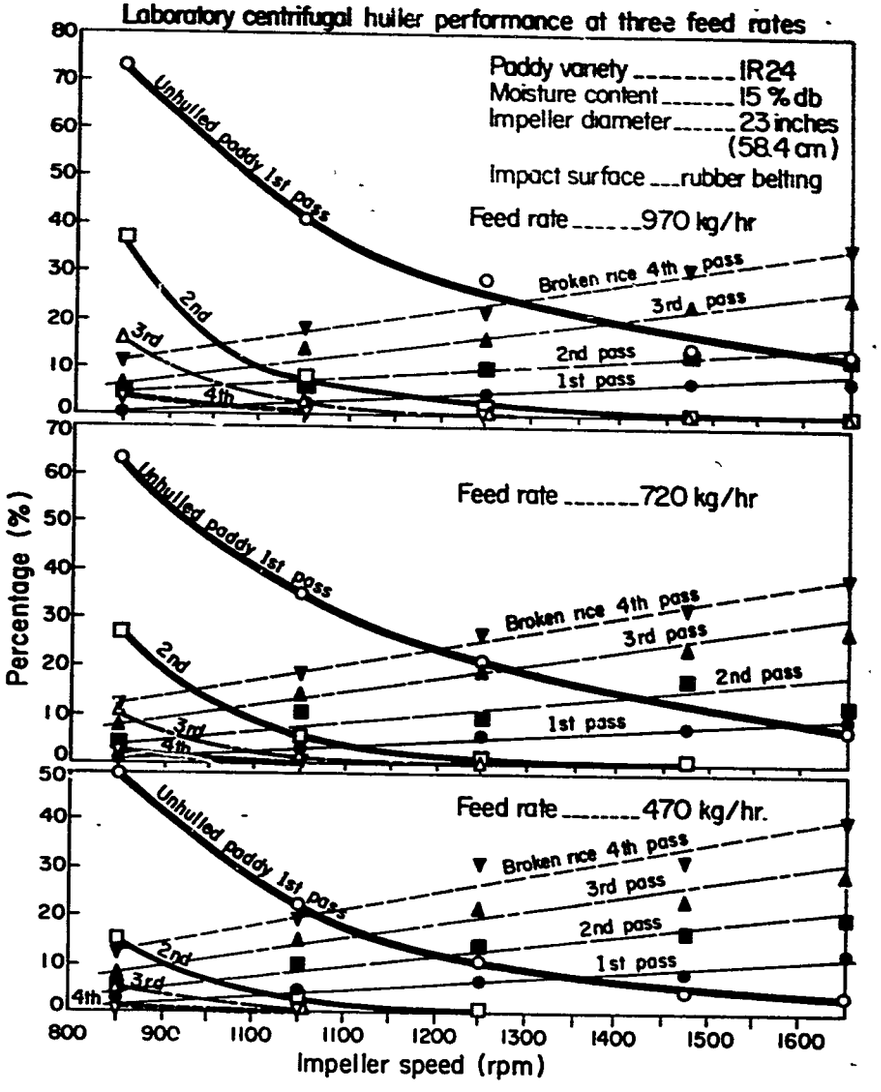

Fig. 14. Effect of impeller speed and number of passes on unhulled paddy and broken rice.

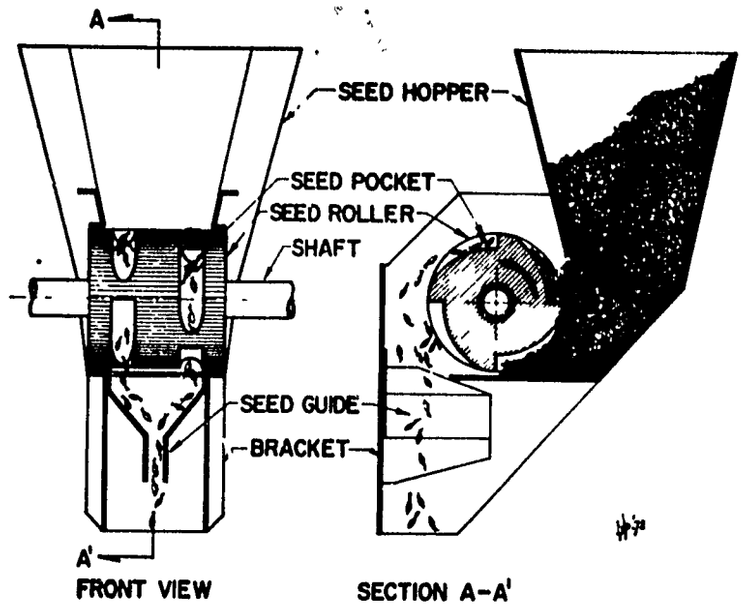

Fig. 15. Metering device for six-row multihopper seeder.

Fig. 16. Endurance testing of commercially produced power tiller.

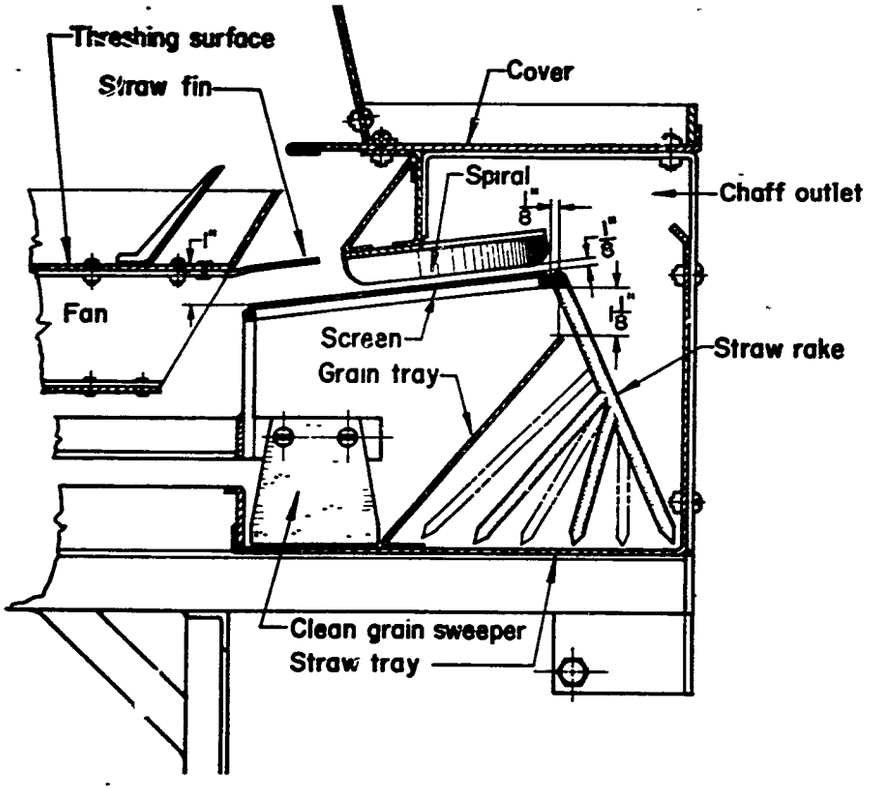

Fig. 17. Optimized relationship of fan, spiral, screen, and grain tray of the table thresher.

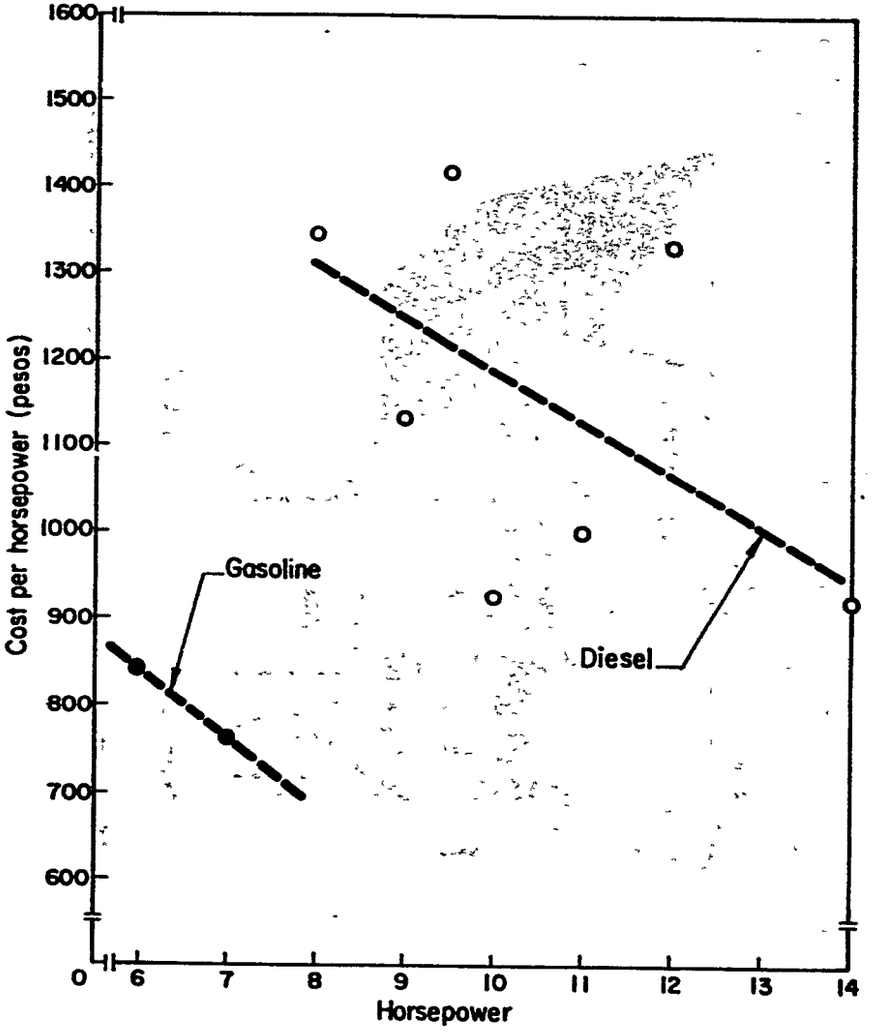

Fig. 18. Comparative cost per horsepower of gasoline and and diesel engine driven power tiller.

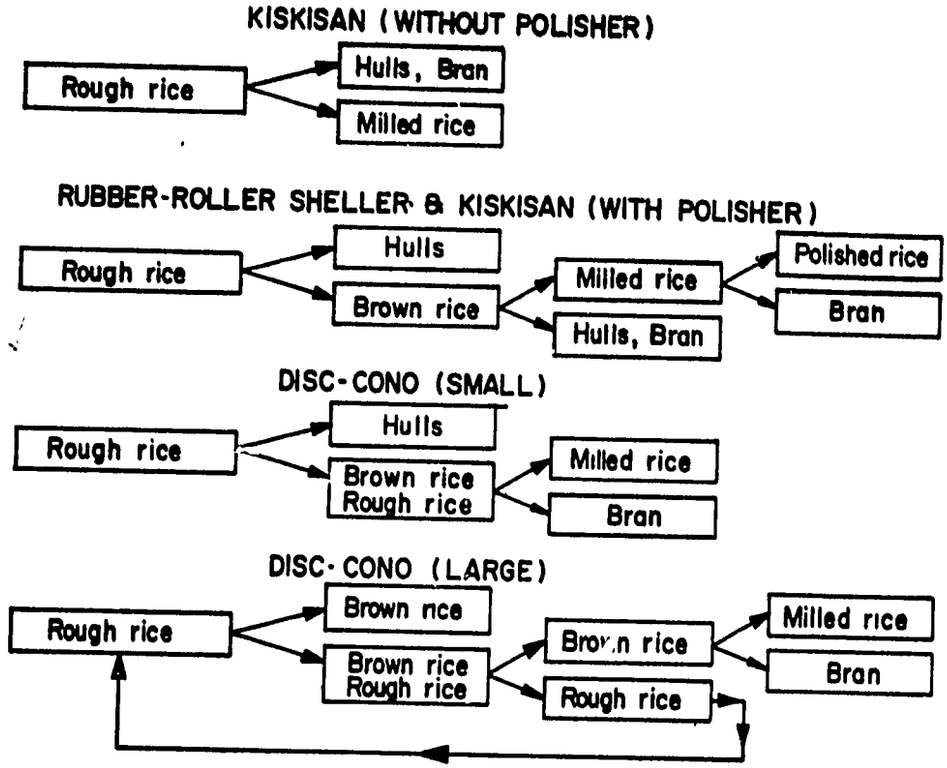

Fig. 19. Some alternative rice milling system.

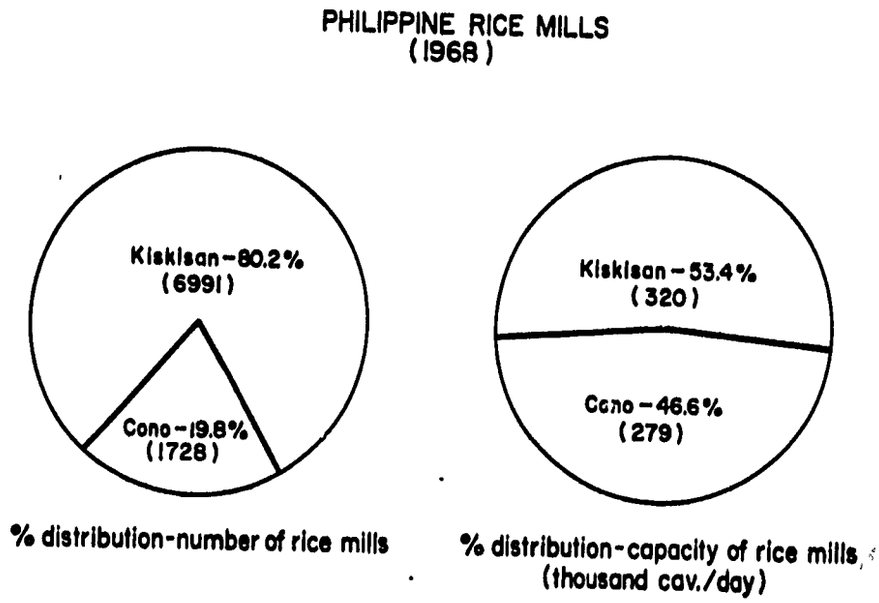

Fig. 20. Percentage distribution of rice mills by number and rated capacity, Philippines, 1968.

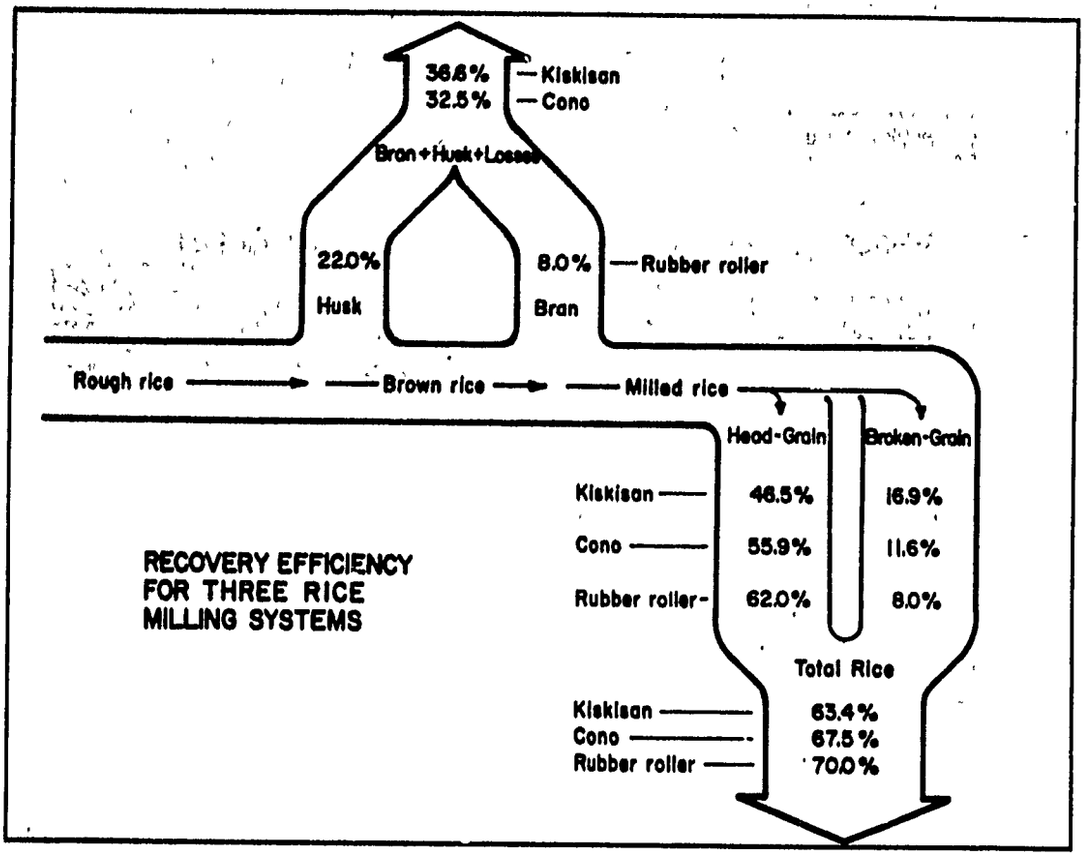

Fig. 21. Recovery efficiency for three rice milling systems.

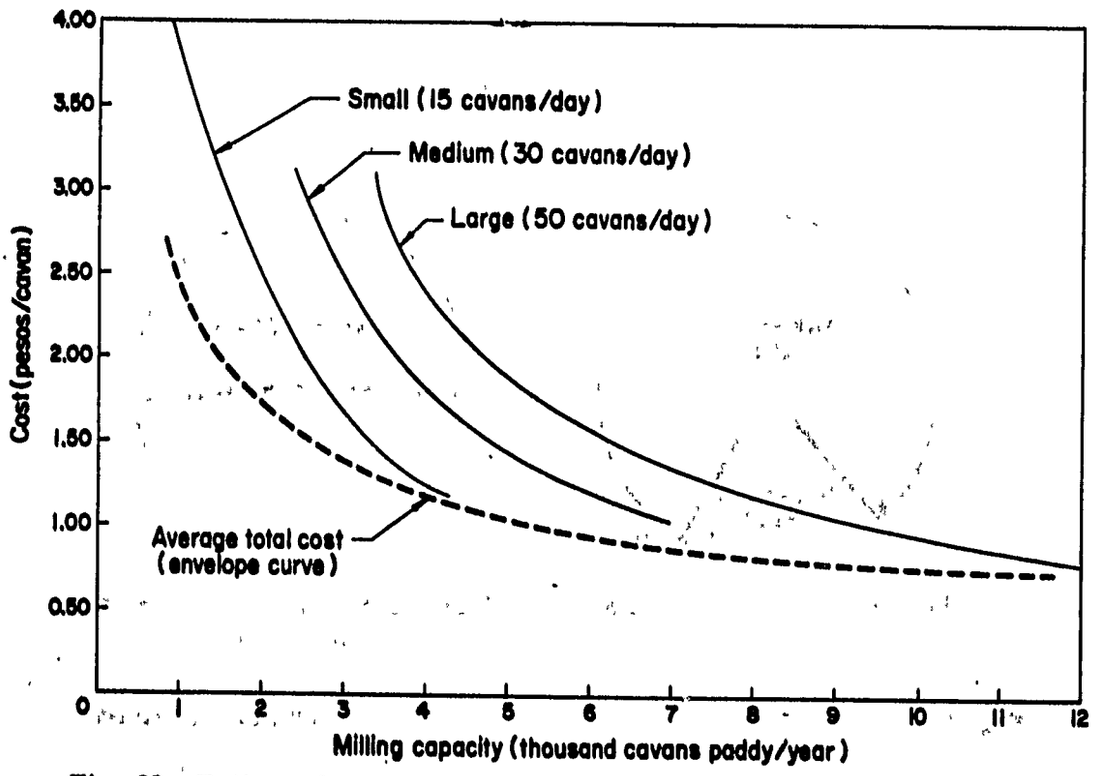

Fig. 22. Estimated total average cost curves for three alternative sized "kiskisan" rice mills, Philippines, 1972.

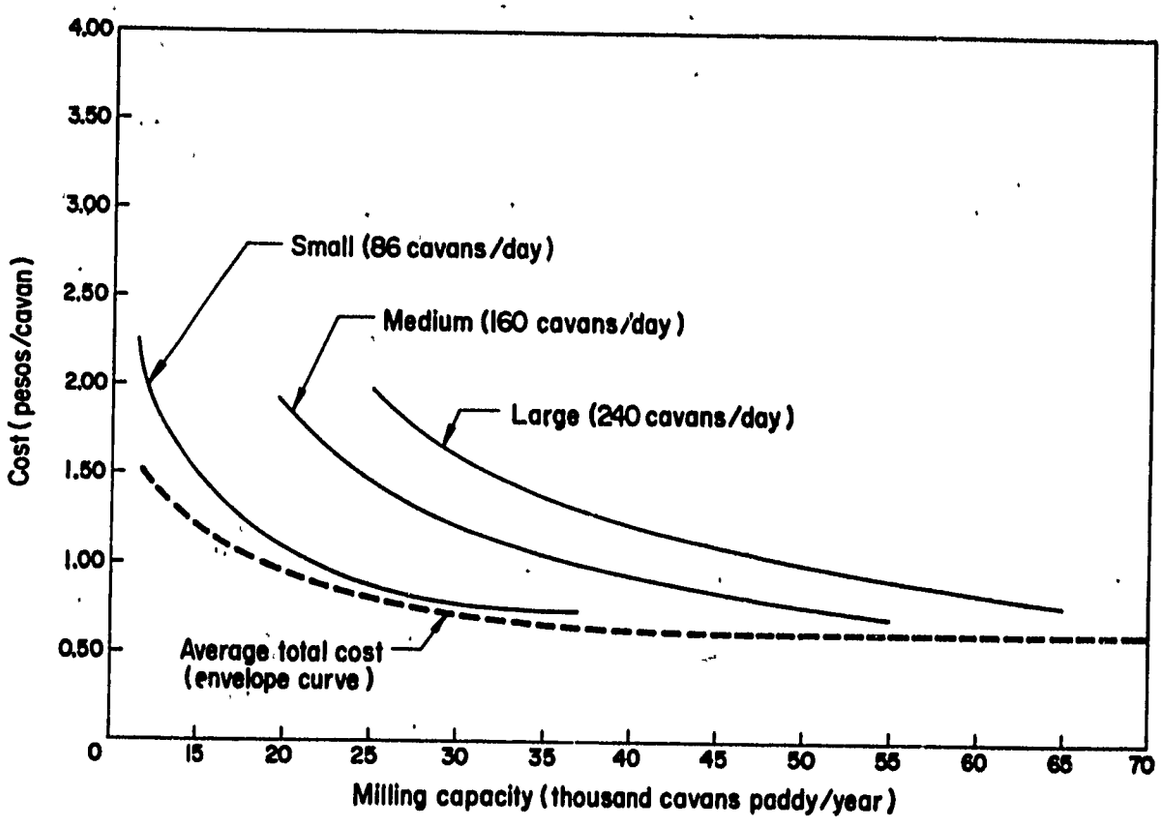

Fig. 23. Estimated total average cost curves for three alternative sized "cono" rice mills, Philippines, 1972.