AGENCY FOR INTERNATIONAL DEVELOPMENT
WASHINGTON, D. C. 20523

BIBLIOGRAPHIC INPUT SHEET

FOR AID USE ONLY
BATCH #28

1. SUBJECT CLASSIFICATION

A. PRIMARY: Serials — Y-AN20-0000-GG50

B. SECONDARY: Agriculture--Farm equipment--Tropics

2. TITLE AND SUBTITLE

Agricultural equipment development research for tropical rice cultivation; semi-annual progress report no. 13, July,1971 to Dec.,1971

3. AUTHOR(S)

(101) IRRI

4. DOCUMENT DATE	5. NUMBER OF PAGES	6. ARC NUMBER
1971	57p.	ARC RP631.3.161

7. REFERENCE ORGANIZATION NAME AND ADDRESS

IRRI

8. SUPPLEMENTARY NOTES *(Sponsoring Organization, Publishers, Availability)*

(Research summary)

9. ABSTRACT

10. CONTROL NUMBER	11. PRICE OF DOCUMENT
PN-RAB-584	

12. DESCRIPTORS

Agricultural machinery
Intermediate technology
Rice

13. PROJECT NUMBER

14. CONTRACT NUMBER
CSD-2541 Res.

15. TYPE OF DOCUMENT

AID 590-1 (4-74)

6

SEMIANNUAL PROGRESS REPORT NO. 13

JULY 1 TO DECEMBER 31, 1971

(For restricted circulation only)

for our shelf

CONTRACT NO. AID/csd-2541
Agricultural Equipment Development Research
for Tropical Rice Cultivation

by

AMIR U. KHAN
Development Engineer

FRED E. NICHOLS
Evaluation Engineer

BART DUFF
Agricultural Economist

Agricultural Engineering Department
The International Rice Research Institute
Los Baños, Laguna, Philippines

Copies of this report have been filed with:

Office of Agriculture & Fisheries
Bureau for Technical Assistance
USAID, Washington, D.C.
(100 copies)

The Director
USAID, Manila, Philippines
(3 copies)

TABLE OF CONTENTS

Title	Page
Introduction and Summary	1
Progress Report	4
Design and Development	5
Field Machinery	
Individual-row hopper seeder	5
PTO multicrop thresher	5
Stripper harvester	6
4-6 hp power tiller	8
Extendable lug traction wheel	9
Low lift bellows pump	9
Drying and Processing	
Direct-flame drying	10
Heated-sand drying and parboiling equipment	10
Rice hull furnace	13
Test and Evaluation	14
Table thresher	14
Power grain cleaner	14
Japanese drier	14
Power weeder	14
Individual-row hopper seeder	15
Pregerminated paddy seeder	15
Seed placement studies for lowland rice	15
General test and evaluation activities	16
Economics of Mechanization	16
Small-scale industry study	16
Human energy measurement study	17
Task performance and cost studies	18
Mechanization and employment study	20
Retail survey of agricultural machinery industry	23
Application of value analysis in design studies	23
Subcontract Development, Extension, and Training Activities	24
Subcontracts	24
Small-scale machinery project	24
Training	25
Work Plan	26
Personnel List	31
Tables	
Figures	

INTRODUCTION AND SUMMARY

This report, the 13th in a series, contains information describing agricultural machinery development activities carried out under IRRI/AID Contract No. csd-2541 for the period July 1st through December 31, 1971. Design, development and diffusion of improved rice production and processing equipment to small- and medium-scale farmers and marketing firms in tropical areas remain the principal objectives of work under this program. During the reporting period, increasing emphasis has been placed on the creation of avenues of communication among farmers, manufacturers, engineering agencies, financing groups and project personnel to facilitate the diffusion of designs emanating from the project.

Project review

In September, a comprehensive review was conducted to establish and define future objectives and funding requirements. As a result of this review, work has been intensified on a reduced number of projects which will expedite product development and ensure earlier release for production. Increasing emphasis is being placed on economic considerations at each point in design development and the active involvement of interested manufacturers at crucial stages in machine development.

Design and development

The preceding six months have seen the completion of major design efforts on a number of machines. Final refinements and performance testing have been completed on the manufacturing prototypes of the rotary power grain cleaner which is currently under limited production by two firms in the Philippines. The initial prototypes of a small 4-6 hp walking tractor, a lowland rice seeder which accurately controls row seed placement, and a lightweight, low-cost, manually operated, low lift pump have also been completed. The latter three machines are concurrently undergoing intensive field evaluation trials at IRRI and cost and marketing studies by a number of local firms. It is anticipated that the succeeding six months will see each of these designs in commercial production. Close association with manufacturers in the development of commercial prototypes, the refinement of design details, and market planning will accompany the release of each of these machines.

Local sales of the mechanical seeder for pregerminated paddy continue to be strong. It is estimated by the two firms currently fabricating this machine that 600 units have been sold during the past two cropping seasons. Sales of the rotary power weeder being produced in Japan have grown at an accelerated rate. Manufacturers have marketed a total of nearly 3000 units during the past year.

Extension

Efforts to test, evaluate, and extend the use of machine designs emanating from contract activities have been expanded considerably during the reporting period. In addition to demonstrations held at the request of and

in cooperation with local manufacturers and agriculturally related agencies, the project has been actively participating in a pilot small-scale machinery project funded by the Government of the Philippines. Under this program, IRRI designs have been introduced into a localized area of Central Luzon for use by farmers located in each of ten cooperatives. This project provided extremely useful information on the acceptance and performance of the machinery under actual field conditions.

The agricultural engineering department has now entered into five active subcontracts with agencies in Taiwan, Thailand, West Pakistan, Indonesia, and India to test and evaluate IRRI designs under conditions found in those countries. Three additional subcontracts are pending. In addition, the project has established close working relationships with Centro Internacional de Agricultura Tropical (CIAT) and International Institute of Tropical Agriculture (IITA) for test and promotional work in Latin America and Africa. The full extent of international extension activities is summarized in the following table:

Country[a]	Status of test subcontract[b]	Number of machines delivered				
		Seeders		Drum	Table	Grain
		6-row	8-row	thresher	thresher	cleaner
Ceylon	discussing	1		1		1
India	active	1	1	2	2	
Indonesia	active	1	2			
Korea	discussing	1				
Malaysia	active		1			
Pakistan (West)	active		2	1	2	
Taiwan	active	2		1	2	
Thailand	active	3	3	1	2	
Vietnam (South)	negotiating	1				

[a] Test and evaluation activities in Colombia and Nigeria are being financed and implemented by CIAT and IITA, respectively. IRRI provides test forms, procedures and technical assistance.

[b] A list of agencies participating in the subcontract program is found on p 24.

Papers and publications:

Contract personnel prepared and presented the following papers and articles during the reporting period:

Agricultural Engineering, IRRI. Table thresher instruction manual. 12 pp.

Barker, R., W. Meyers, C. Crisostomo, and B. Duff. "Employment and Mechanization in Philippine Agriculture". International Labor Review, Geneva (forthcoming 1972).

Cabanos, P. "Jeepney Manufacturing in the Philippines: A Model for Developing the Agricultural Machinery Industry". Agricultural Mechanization in South East Asia, Autumn 1971. Farm Machinery Industrial Research Corp., Tokyo.

Crisostomo, C., W. Meyers, T. Paris Jr., B. Duff and R. Barker. "The New Rice Technology and Labor Absorption in Philippine Agriculture". Malayan Economic Review, Singapore (forthcoming 1972).

Duff, B. and N. Orcino. Economic Research in the Department of Agricultural Engineering. Paper presented at IRRI Saturday seminar, August 21, 1971.

Khan, A. U. Agricultural Machinery Development at The International Rice Research Institute. Paper presented at seminar on the Mechanization of Rice Production and Processing, Paramaribo, Surinam, September 27-October 2, 1971.

Khan, A. U. Present and Future Development of the Mechanization of Rice Production. Paper presented at seminar on the Mechanization of Rice Production and Processing at Paramaribo, Surinam, September 27-October 2, 1971.

Nichols, F. The Role of Preventive Maintenance in Agricultural Equipment Development. Paper presented at IRRI Saturday seminar, August 28, 1971.

V.E.A. Wikramanayake and A. U. Khan. A Laboratory Test Tube Miller. Agricultural Engineering Dept., IRRI. 1971.

PROGRESS REPORT NO. 13
JULY 1 TO DECEMBER 31, 1971

The following personnel were responsible for these projects:

Design and development

Field machinery:

1. Individual-row hopper paddy seeder	E. del Rosario, A. Khan
2. PTO multicrop thresher	A. Khan
3. Stripper harvester	A. Khan
4. 4-6 hp power tiller	P. Cabanos
5. Extendable lug traction wheel	P. Cabanos
6. Low lift bellows pump	N. Navasero

Drying and processing:

7. Direct-flame drying	A. Manalo
8. Heated-sand drier	A. Khan, J. Arboleda
9. Rice hull furnace	A. Manalo, A. Khan;

Test and evaluation

10. Table thresher	B. Ramos, C. Padolina, F. Nichols
11. Grain cleaner	C. Padolina, B. Ramos
12. Japanese drier	C. Padolina
13. Seeder	C. Padolina
14. Weeder	C. Padolina
15. Development test support	B. Ramos
16. Seed placement study	N. Navasero

Economics of mechanization

17. Small-scale industry study	I. Estioko, B. Duff
18. Human energy measurement study	N. Orcino
19. Task performance and cost studies	B. Duff, N. Orcino
20. Mechanization and employment study	B. Duff, I. Estioko
21. Retail survey of agricultural machinery	N. Orcino, B. Samson
22. Value analysis	B. Samson, B. Duff

DESIGN AND DEVELOPMENT

Field machinery

Individual-row hopper paddy seeder

Details of an individual-row hopper seeder (IR seeder) have been provided in the earlier reports. One six-row IR seeder (fig. 1) was procured from a local manufacturer for evaluation. Tests indicated some bridging problems in the hopper. A variety of hopper shapes were evaluated for seed bridging tendency. After a series of preliminary trials, three hopper designs (fig. 2) were selected for more intensive evaluation. The three hoppers were mounted on one six-row machine and thus the three metering rollers were driven by the same ground-driven shaft. The hoppers had identical seed metering rollers and seed pockets. The pockets were equally spaced to meter the seeds at 25-cm spacing.

Three 10-m long greased paper sheets were spread on a cement floor to register the seed deposition pattern from three random passes of the seeder. From the data in table 1, bridging was evident with hoppers 1 and 2 by the missing hills. Hopper 1 exhibited maximum bridging when using seeds of 0.8 to 1.2-cm sprouts. Hopper 2 was found to reduce seed bridging tendency when tilted forward by 15 degrees from the vertical axis. Hopper 3 which had a curved bottom and smoothly curved sidewalls sloping 15 degrees from the vertical axis resulted in no seed bridging. Although the frequency distribution for hopper 3 was quite spread, it was able to meter the desired seeding rate of about 55 kg/ha. Further tests were conducted with hopper 3 to establish proper roller seed pocket dimensions. The dimensions and seed metering performance of the various seed pockets are shown in fig. 3.

One IR seeder with the no. 3 hoppers and appropriate seed rollers has been received from a local manufacturer. Test results of the production model seeder are plotted in fig. 4. It was observed that the average seed drop per hill decreased as the seeds were incubated for a longer period. The unit is undergoing further evaluation.

PTO multicrop thresher

Attempts were continued to optimize the design of the three major thresher elements (threshing cylinder-concave, rotary screen separator, and straw thrower). The optimum number of spikes were found to be 42 on the threshing cylinder and 12 on the concave.

Modifications and tests were continued on the three rotary screens to remove the residual 7 to 15 percent threshed grain that was not separated at the concave. A major portion of the loss occurred at screens 1 and 2 (table 2). It was observed that with high-moisture paddy, loss was generally high as the threshed grain remained stuck to wet straw which formed into lumps. A shaft, with paddles mounted at 40 degrees from the rotating

axis, was installed at the center of the middle screen to break up straw lumps and to axially move straw to the straw thrower. Tests indicated that the rotating straw paddles were quite effective in axially moving the straw and in throwing the straw lumps against the inside of the central screen.

On the other hand, with low-moisture paddy, higher grain loss occurred at the middle screen. This was due to the excessive breakage of straw at the cylinder and its passage through the concave. The broken straw pieces were delivered directly to the middle screen. Losses in the outer cylinder was generally low. It was felt that the length of the rotary separator (117 cm) was not sufficient to separate all the grain from the straw. The three rotary screens were lengthened by 30 cm. This modification helped to reduce the separation loss (table 3). To increase the effective screening area, a variety of pockets and baffles were tried in the middle screen. Figure 5 shows the slanting pockets which carry the grain over to the other side of the screen and at the same time assist in the axial movement of the threshed material. These pockets were found satisfactory and were adopted for use in the middle screen.

When threshing high-moisture paddy with surface water or with wet or decomposed straw, the concave was often clogged. Under such conditions, separation occurred only at the rotary screens and grain loss was very high. Testing has now been limited to dry or freshly harvested paddy. After obtaining satisfactory performance with drier crops, attempts would be made to adapt the thresher for wet and decomposed paddy crop.

Stripper harvester

High grain loss was encountered with the field stripper harvester that has been reported previously. Because of the difficulties encountered in controlling the different variables and in evaluating grain losses with the field machine, a laboratory test rig was fabricated. The test rig permitted convenient alteration in the stripper component designs and evaluation of their effect on threshing efficiency and grain loss.

The threshing belt angle was 40 degrees with respect to the ground in the field machine (fig. 6a). With this angle, grain was thrown slightly upward by the threshing belt and this increased grain scatter loss. The belt angle was changed to 9 degrees (6 b) with respect to the ground in the laboratory test unit. The threshing belt velocity in the field machine was 4.31 m/sec as compared to the variable speed of 0 to 9.1 m/sec in the laboratory unit. The simulated ground speed was 0.23 m/sec or approximately 800 m/hr in the laboratory unit. The plant-gathering bar velocity was variable from 1 to 11 times the ground speed. Satisfactory harvesting is indicated by the low threshing loss (fig. 7) at threshing belt velocities of above 5.58 m/sec. It was felt that at higher threshing belt velocities, problems might be encountered with the wire loops which were fastened to the rubber belt with rivets. After a series of trials of up to 9.1 m/sec threshing belt velocity, it was decided that 7.1 m/sec speed would be used for further testing. Tests were conducted to establish the optimum spacing of the gathering bars and the effects of the gathering bar velocity on the threshing efficiency and grain loss. Gathering bar spacings (fig. 9b) of 7.62, 15.24 and 30.48 cm were tried.

With closer bar spacings and gathering bar velocity of above 2.5 times the ground speed, plants fail to enter between the bars but are swept under and fed to the threshing belt from the panicle end. Threshing starts at the front end of the threshing belt as the panicles enter between the bars and the belt. The panicles move up the threshing belt then slide back out of the machine.

Figure 8 indicates the effect of gathering-bar velocity on grain loss with varying bar spacings of 7.62 to 30.48 cm. The results indicate that irrespective of bar spacing, increased bar velocity improved threshing efficiency but also increased scattered grain loss. The closer bar spacing and and higher bar velocity kept the paddy well pressed against the threshing belt, resulting in an action somewhat similar to a concave. The 7.62 cm bar spacing and bar velocities of above the ground speed resulted in a combined unthreshed and scatter losses of 2 to 3 percent (fig. 8).

It was felt that the opening between the bar may be responsible for the scatter loss. Deflectable flaps (fig. 9a) were tried on the 15.24 cm spaced bars. These flaps entered the plants in a vertical position and were then deflected by two siderails to a position parallel to the threshing belt. With this arrangement, the open space between the bars was covered by the flaps while the plants were threshed. Figure 7 indicates the performance with the deflectable flaps at different threshing belt velocities. The velocity of the deflectable flaps was maintained at 1.5 times the ground speed during this test. The threshing belt velocity did not indicate any significant effect on the scattered grain (fig. 7). The semi-threshed material (broken panicles) reduced gradually with increasing threshing belt velocity. Threshing efficiency as exhibited by the unthreshed grain improved drastically above 5.58 m/sec threshing belt velocity.

Test results with the 15.24 cm spaced deflector flaps and the 7.62 cm spaced bar are plotted in fig. 10. It was not possible to test the deflector flaps beyond 3 times the ground speed because of mechanical problems with the deflecting action. An unusual difference is apparent on the scattered grain loss with the deflecting flaps and the bars. With the deflector flaps, scatter loss was initially high and rapidly decreased as flap velocity increased, whereas with bars, scatter loss was initially low, increasing slightly with increasing bar velocity. The reason for this difference is not yet apparent.

Test results (table 4 and fig. 8) showed that at 30.48 cm spacing, both threshing and scatter losses were high. This was perhaps due to inadequate pressing of paddy on the threshing belt because of the widely spaced bars. On the other hand, the higher scatter loss may be due to the extra flapping action of the paddy. Bars with 7.62 cm spacing were selected for more intensive evaluation since wider spacing resulted in inadequate threshing and higher scatter loss. Closely spaced bars and higher bar velocities resulted in a threshing action at the front end of the threshing belt as described earlier. It was felt that threshing close to the front end of the belt may be responsible for the scatter loss. The lower front sprockets of the deflected bar mechanism were moved slightly backward of the front end of the threshing belt (fig. 9c). This moved the initial threshing point toward the

back by about 8.89 cm. The curved front shield on the threshing belt was to 135 degrees. This was done to direct backward any grain that may be picked up by the threshing belt from its housing. Test results with the above modifications are included in fig. 11. These tests indicate that with a gathering-bar spacing of 7.62 cm and a velocity of about 4 to 6 times the ground speed, the total grain loss was about 1.5 percent. Further alterations and tests are being continued to improve the performance. A self-propelled field harvester incorporating the optimized component designs from the laboratory test unit is now being designed.

4-6 hp power tiller

The high cost of imported power tillers is a serious bottleneck in the mechanization of rice cultivation in the developing countries. It is difficult to set up manufacture of the complex Japanese power tillers in the developing countries as these machines are basically designed for capital-intensive, mass-production techniques. Many small machine shops have recently started fabricating small, locally designed, power tillers in Thailand. These machines use readily available components and are rapidly gaining popularity in Thailand because of their low price. These locally designed power tillers are quite heavy and can be substantially improved. On the basis of these developments, a simple, single-axle, 4-6 hp, lightweight power tiller (fig. 12) was designed for paddy cultivation. The following factors were emphasized in the design of this tiller: (1) Lightweight -- To improve mobility, the weight of the tiller has been kept low (112 kg). If it bogs, two to three men can lift it out. (2) Simple construction -- For the tropical farmer, the machine is quite easy to understand. An enclosed oil bath chain transmission has been designed since standard chains and sprockets are readily available in most developing countries and do not require precision alignment. (3) Ease of fabrication- Except for the engine, most parts can be fabricated in small machine shops with simple machine tools. Only those standard components, which are readily available in the developing countries, are used in its design. Except for the bearing shafts and the housings, other parts do not require precision machining. No sheetmetal stampings are used in the design since stamping requires large investments in tooling. All sheetmetal components have been specially designed for manual fabrication with the use of simple forming frames and tools. Except for two pulleys, no cast parts are used.

The first prototype unit is powered by a 4.5 hp engine. The engine has sufficient power for wetland plowing and harrowing operations. The reduction ratio between engine and wheel is 72:1. The first prototype tiller has been operated for about 100 hours without any mechanical problems. A second prototype unit (fig. 13) has just been completed. This unit is being evaluated in the Philippines. A number of local manufacturers have shown interest in this power tiller. It is expected that the design will be released soon to three local manufacturers for trial production.

Extendable lug traction wheel

Test results on an experimental traction device with extendable lugs for tractor wheels were reported previously. The basic design criteria of the extendable lug wheel were established in these tests. Six extendable lugs developed maximum drawbar pull at about 50 percent wheel slip as compared to five lugs that had a maximum drawbar pull at 85 percent wheel slip. Tests indicated that the six-blade extendable lug wheel with -5.08, +2.54, +6.35 and +10.16 cm lug settings from the tire periphery was satisfactory for wetland work.

Prototype extendable lug wheels (fig. 14) we e fabricated to incorporate the features established in the earlier tests. The weight of each lug wheel is about 130 kg. These wheels have been designed with minimum material to encourage commercial production. Readily available standard structural steel sections such as C-channels, angle iron, and flat bars have been used throughout the design. Detailed engineering drawings have been completed and copies have been forwarded to some manufacturers in response to their inquiries.

Low lift bellows pump

The design of a low lift, manually operated, portable bellows pump was described in report 12. A prototype pump was fabricated. This pump indicated a pumping capacity of 194 liters/min at 1.0-m head. This pump was mounted on a test rig to determine the durability of the canvas bellows (fig. 15). The pump bellows were made of two layers of cotton canvas with metal inserts. The test unit worked for 250 hours before the canvas bellows failed. Additional durability tests are now underway on bellows which have combination canvas and rubber-coated nylon fabric walls. Canvas bellows without metal inserts were also tested but the water delivery was less than the reinforced bellows.

Some modifications are now being tested to minimize operator fatigue. The first prototype pump was operated by a back-and-forth action of a stand pipe with an 80-cm lever arm. It was felt that the operator weight could be effectively utilized in minimizing operator effort. Foot rests were provided in the second unit (fig. 16) so that the operator could stand on the pump and shift his weight from one foot to the other to operate it.

It has been observed that both the bellows size and the number of strokes per minute have an effect on operator fatigue. A pump with smaller bellows will require more strokes per minute although it may need less force to operate. Two more pumps have been fabricated, one with smaller and the other with larger bellows than the first prototype unit. The three pumps are now being evaluated for pumping capacity and operator fatigue.

Drying and processing

Direct-flame drying

Tests were conducted with an experimental, laboratory model, direct-flame drier (fig. 17) in combination with (a) heated air and (b) shade drying. Figure 18 shows the reduction in drying time when using direct-flame drying in combination with heated-air drying. Paddy with an initial moisture content of 32 percent (d. b.) was exposed to direct flame for 40 seconds and then placed in sealed bottles for different tempering durations (0.5, 1.0, 1.5 and 2.0 hr). It was later dried with heated air on a flat bed drier. The moisture contents of the flame-exposed paddy was reduced to 15 percent dry basis after 1 hour of heated-air drying. On the other hand, the same paddy took 2 hours to dry with heated air only.

Figure 19 shows the head rice yields of the different drying treatments. With conventional drying methods, the highest head rice yield of 62 percent was obtained with the shade-dried control sample. The head yield was reduced to 57 percent when drying with heated air for 2 hours at 54.5°C. On the other hand, head rice yield improved when a combination of direct-flame and heated-air drying was used. All tempering treatments gave better head rice yields than the control. The combination of direct-flame and shade drying resulted in a head rice yield of 68 percent.

Further experiments were conducted to find the initial paddy moisture level that is necessary to obtain high head yield for the combination direct-flame and shade-drying method. Figure 20 shows the moisture reduction with paddy with different initial moisture levels at two grain flow rates. The dotted lines represent the moisture reduction at the higher grain flow rate. The head rice yields obtained in this test are shown in fig. 21. Irrespective of initial moisture level, higher head rice yields than the control were obtained in all tests in which the paddy was sealed for 1 hour. At lower initial moisture levels, flame-exposed paddy indicated a lower head yield than the control. These results indicate possibilities of tempering paddy in sealed plastic bags to improve head rice yields when initial moisture level is below 26 percent dry basis.

To obtain high head rice yields, paddy should not be dried below 20 percent dry basis (fig. 20) with the flame exposure method if it is to be immediately exposed to ambient temperature which has an equilibrium moisture content of 16 percent. Grain flow rates must be properly adjusted to control this level of moisture at the drier's outlet. These experiments show that direct flame exposure in combination with either heated-air drying or shade drying can be used to accelerate drying and to increase head rice yield.

Heated-sand drying and parboiling equipment

Substantial moisture reduction and an increase in head rice recovery was obtained in a short period by the heated-sand process which has been

previously reported. These results indicated that the initial moisture content of paddy should be more than 27 percent (d.b.) to obtain high milling yields. Increase in head rice yields was due to the gelatinization of the starch granules and the effect is similar to parboiling of paddy. Presoaking of dry paddy for 6 to 12 hours can introduce sufficient moisture to permit utilization of this process for increasing head yields.

An experimental rotary heated-sand drier has been reported previously (reports 11 and 12). It indicated a 54 kg/hr dry matter capacity with stabilized sand temperature of 154°C when processing paddy with 32 percent initial moisture content. Heat utilization efficiency of 35 percent was obtained with a grain-sand exposure time of 15 seconds. Further tests were conducted on the experimental unit with sand temperature and paddy initial moisture content as the two variables. Paddy with initial moisture contents of 17, 23, 25, 27 and 30 percent dry basis were subjected to eight sand temperatures: 127-132, 138-143, 149-154, 160-166, 171-177, 182-188, 193-199 and 204°C.

Freshly harvested IR20 paddy with 30 percent moisture content (d.b.) was threshed and stored in a cold room (4.4°C) for 4 days to attain a uniform moisture level. Samples from the stored paddy were dried on a concrete floor to the desired moisture level before each test. Three slotted pipe LPG burners, each with a heating capacity of 54,150 BTU/hr, were used to heat sand in the pan. As soon as the sand temperature reached the desired range, paddy sample with the desired initial moisture level was fed into the machine. Sample for the determination of moisture and milling recovery was collected 4 minutes after the introduction of paddy into the machine. These samples were immediately sealed in bottles after determining the grain temperatures. The control sample was, however, spread on the floor for 24 hours to achieve equilibrium with the ambient air. Prior to the determination of milling tests, all sealed test samples were spread on the floor for 24 hours to achieve equilibrium moisture contents of about 16 percent.

The result of the tests are shown in fig. 22 and 23. Figure 22 shows a family of curves on head rice recovery of paddy with different initial moisture contents. The grain-sand exposure time was constant in the test. It has been assumed that the exposed grain temperatures have a direct correlation with the sand temperatures. Paddy with initial moisture content of 25 percent or more had an increase of 5 percentage points over the control when processed with the heated-sand method. The improvement over hot-air drying was even more significant.

Paddy with below 25 percent initial moisture content resulted in a lower milling yield than the control up to grain temperatures of 118°C. Above this grain temperature, however, improved milling yields were obtained for all samples. These tests corroborate the earlier findings that higher initial paddy moisture is essential for using the heated-sand process. It also proves that this process could be used for fairly dry paddy (up to 21 percent dry basis) provided higher sand temperatures are used. From these tests, it seems that one of the critical factors is not only the initial

paddy moisture contents but also the rate of heat transfer into the grain. With low initial moisture paddy and lower sand temperatures, moisture seems to be released before adequate gelatinization can take place. The same paddy, when heated rapidly by a higher sand temperature, momentarily retains sufficient moisture for adequate gelatinization of the starch.

The color change of the processed rice became more pronounced at higher initial paddy moisture levels. Based on head rice yields and the change in color of paddy processed at different initial moisture levels, the following safe sand temperatures were established (fig. 20):

Initial paddy moisture level (% dry basis)	Sand temperature (%)
25-30	138-203
23	149-203
21	160-203

These tests show some variation from earlier reported tests (report 9). This is perhaps due to the difference in the treatment of the paddy immediately after drying. In the earlier tests, paddy was spread immediately after processing through the machine on the floor for drying under ambient conditions. In the second set of tests, paddy was sealed in bottles immediately after processing through the machine. It was kept sealed until 24 hours prior to milling when it was spread on the floor for drying.

Modifications were then made on the experimental unit to improve its efficiency by minimizing the heat losses, increasing heat transfer between flame and pan and between pan and sand. The firebox was enclosed with insulated walls. The sidewalls of the sandpan were raised to increase sand-holding capacity and to minimize sand spillage. Burners were relocated in an off-center position to concentrate heat under the agitating sand mass.

Preliminary tests with the modified machine indicated that with a grain feed rate of 47 kg dry matter per hour, the sand temperature stabilized at about 204°C. A paddy-sand weight ratio of 1:25 was obtained inside the rotary drying chamber. Doubling the grain feed rate reduced the stabilized sand temperature to 193°C and changed the paddy-sand weight ratio to 1:13 inside the drying chamber. In both cases, the moisture reduction was approximately 12 percent (d.b.) which is similar to that obtained with earlier reported tests. A heat utilization efficiency of 38 percent was obtained at the higher feeding rate.

Further tests are being conducted to verify these results and to gain a better understanding of the interaction between the different variables (sand temperature, grain-sand exposure time, initial paddy moisture, and post-exposure treatment of paddy).

Rice hull furnace

The sloping-grate rice hull furnace as reported earlier was too large and not well suited for commercial production. Attempts were made to develop a more compact furnace by using six layers of inverted-V channels (fig. 24a) to introduce air into the square combustion column. Alternate rows of inverted V-channels were installed in the midsection of a 30-cm square steel combustion chamber. Hull was stored in a hopper located on top of the combustion chamber. A tight corner was provided on the hopper to block the movement of air through the stored hull in the hopper. The alternate rows of the inverted-V channels had openings on opposite ends to serve as air intake and exhaust ports. Air was sucked through one set of V-channels and passed through the hull to the other set of channels for exhaust. The furnace was initially ignited through the opening at the bottom and the combustion gradually progressed upward into the inverted-V section. A blower was used to suck air through the hull in the combustion chamber.

It was felt that burnt hull would cascade downward between the inverted-V channels and this would permit automatic feeding of hull. During the furnace operation, it was found that burning was concentrated close to the air intake ports of the inverted-V channels. To improve combustion, openings were made on both ends of all the V-channels and the combustion chamber was enclosed in a suction housing (fig. 24b). With this modification, air entered from the bottom opening of the combustion chamber and moved out through the openings of the inverted-V channels. More uniform combustion was obtained with this modification. Burnt hull was not able to automatically flow downward in the combustion chamber. The hull formed a lump during combustion and this resulted in a bridging action. Agitation was needed in removing the burnt hull from the furnace.

It was felt that perhaps the inverted-V channels were restricting the free flow of burnt hull. A second furnace with a 15-cm square combustion column was fabricated (fig. 24c) with no V-channels to obstruct the hull flow. The combustion chamber had 1.9-cm spaced louvers installed on all four sides at its midsection for air movement. The louvered area was enclosed in a housing which was connected to the suction end of a blower. Air entered at the bottom of the combustion column and was sucked out thru the louver openings. With this arrangement, uniform combustion was obtained throughout the column. However, automatic flow of burnt hull did not occur.

The maximum burning capacity of the 15 x 15 cm section combustion chamber was 2.5 kg of hull per hour (equivalent to 7550 kg-cal/hr). It was felt that perhaps the relatively small 15 x 15 cm cross-section and the vertical walls of the combustion chamber may be restricting the automatic flow of burnt hulls.

A larger tapered combustion chamber (fig. 24d) was fabricated. This square combustion chamber is 21.6 cm at the top and has a 30 cm square opening at the bottom. The clearance between the louvers is 1.9 cm. The total

air passage louver area is 2.5 times that of the air entrance at the bottom. A grate is provided at the bottom with a set of stirring rods. These rods can be pulled out after initial combustion to increase the grate spacing to 3.2 cm. A rice hull consumption of 6 to 8 kg/hr or equivalent to 21,000 kg-cal/hr was obtained with the initial test of the furnace. Further test and development work is continuing on this furnace.

TEST AND EVALUATION

Table thresher

Field performance and durability tests have continued. Output quality is the major limiting factor voiced by nearly all operators. Field mobility has presented some problems but has been nearly eliminated by the addition of a wheel kit option. Several low-cost design modifications for improving the output quality are currently under test. Future production models will incorporate an improved cleaning system that evolves from these tests.

Power grain cleaner

Performance tests have been completed with the incorporation of additional design modifications for improved cleaning quality over a wider range of input conditions. Durability tests are currently underway and a 100-hour inspection will be conducted prior to the end of this reporting period. Several components were redesigned for added safety during operation. An operator's instruction manual has been completed and is being printed.

Japanese drier

A performance evaluation of a Japanese drier was conducted to determine local operating standards. Two drying air temperatures were used to determine optimum performance levels. A Brown recorder with multi-channels was used to measure temperature at various points in the plenum chamber as well as in the grain. The test results are shown in table 5. Some variations from the manufacturer's listed performance were discovered, such as moisture reduction, fuel consumption, and capacity of the silo. These can be primarily attributed to a difference in environmental conditions and type of material dried.

Power weeder

Field performance and endurance tests for one of the two Japanese-built power weeders (three-row) were discontinued due to engine failure. We were unable to obtain satisfactory engine performance when we followed the recommended fuel-oil mixture. Other minor problems were discovered and the manufacturer was informed.

Individual-row hopper paddy seeder

An evaluation of seed dropping accuracy and field performance was conducted for the initial production prototype. Table 6 gives the hill dropping accuracy and seed population per hectare as determined by laboratory test. Considerable interest in this machine has been expressed by both the farmers and the manufacturer as it can be produced and marketed at less cost than the current seeder.

Pregerminated paddy seeder

A survey of 65 farmers who purchased the mechanical seeder is currently underway. Response, although limited, has been quite favorable for the machine. The individuals who were not satisfied with the seeder performance indicated an incomplete understanding of direct seeding methods and the accompanying cultural practice requirements. This had a direct effect on their non-acceptance of the machine. Additional information will be added to the seeder instruction manual clarifying direct seeding cultural requirements.

Seed placement studies for lowland rice

An experiment was conducted to determine the effect of depth of planting and the seeding rate of pregerminated seeds in puddled soil. Seeds of IR127, a low tillering variety with high resistance to lodging, and IR579, a high tillering variety with moderate susceptibility to lodging, were used in the experiment during the 1971 dry season. The field was puddled, leveled, and fertilized by mixing 70 kg of nitrogen per hectare at final leveling and 30 kg nitrogen at panicle initiation. The field was drained 1 day prior to seeding. Seeds of the two varieties were soaked for 48 hours and incubated for 36 hours prior to seeding.

A modified seeder (fig. 25) with adjustable rate of seeding and variable depth of planting was used in this experiment. Optimum control of weeds, pests and diseases was employed. The field was kept drained but moist for 7 days after seeding and then flooded with 3 cm of water thereafter. From table 7, depth of planting has no significant effect on the number of tillers, number of seedlings, or grain yield. Neither has it any significant effect on straw yield or the grain-straw ratio of IR127. The rate of seeding has a positive relationship with the number of seedlings and, to some extent, the number of tillers, but this response does not carry over to grain yield.

The high tillering variety IR579 lodged heavily a few days before harvest, which significantly lowered the yield compared to IR127. All IR127 and some IR579 treatments with lower seeding rates were still erect at harvest (fig. 26). Lodging resistance seems to be a varietal characteristic rather than a result of depth of planting. However, the high tillering variety IR579 may build up resistance to lodging if planted at a lower rate of seeding.

One cannot make deeper furrows on mud slurry. Seeds placed in rows on the surface can easily drift out of the rows during a heavy rain or be carried by excess surface water movement during the seeding operation. Any furrow size large enough to entrap the seeds during seeding will prevent seeds from drifting.

Rate of seeding can be varied from 35 kg to 100 kg of seeds per hectare without significant effect on the yield. The actual rate in farmers' fields will depend largely on the weed control measures employed, the variety used, cultural practices, etc. The Agronomy Department has a series of weed control experiments and recommends 80 kg/ha at IRRI as a seeding rate which helps to counteract the adverse effects of herbicides and provides good competition with the weeds for both solar radiation and nutrients. High-yielding and lodging-resistant varieties are highly recommended for direct seeding.

General test and evaluation activities

Numerous tests have been conducted and evaluation support has been provided to the development engineer and his staff in the development of new machines within the department. A two-day operation and maintenance school was conducted for the operators of the various machines provided to the cooperative project for machine evaluation and acceptance in Nueva Ecija.

ECONOMICS OF MECHANIZATION

Small-scale industry study

An important and integral consideration in agricultural machinery design and development must be the capacity of industry to produce and market equipment economically and efficiently. In the developing countries, the role of small and medium-sized firms supplying agricultural equipment is particularly important because of the large numbers of such firms and their inherent potential for creating employment as a result of relatively labor-intensive methods of production. A study has been undertaken to identify the capabilities as well as the constraints facing the small-scale firms producing machinery.

The initial phase of the study has included an analysis of the available Philippine evidence pertaining to (1) the number of small-scale firms, (2) their contribution to total industrial income and domestic value added, (3) their level of employment and labor absorption capacity, (4) their geographic dispersion between metropolitan and rural areas, and (5) their investment and wage structure relative to large-scale firms.

Definitions for small-scale firms vary widely. In the present analysis, firms employing less than 20 persons are regarded as small-scale. To be more precise, the definition should include a limit on capital (fixed assets) per employee utilized in production activities. The University of the

Philippines Institute of Small-Scale Industries (UP-ISSI) has included a ceiling of ₱4000 per employee in their definition. Using the above definition, but excluding firms with less than 5 employees, we find that nearly 78 percent of all manufacturing firms found in the Philippines fall into the small-scale classification (fig. 27a).

Distribution of income. While representing a sizeable share of the total number of firms, the small-scale sector accounted for only 6 percent of total industrial income generated in the manufacturing sector (fig. 27b).

Employment. Small-scale establishments provided employment for 18.4 percent of the manufacturing labor force with a wage bill amounting to only 9 percent of the total manufacturing payroll (fig. 27c).

Location. The geographic dispersion of small firms shows that roughly 80 percent are located outside the metropolitan Manila area (fig. 27d). The bulk of these are concentrated in Central and Southern Luzon and the Eastern Visayas region.

The average capital investment (fixed assets) per unit of output (value of gross output) for small firms producing machinery is 0.39 as contrasted to 0.26 for large firms. Unfortunately, these capital-output ratios do not incorporate an adjustment for the degree of capacity utilization embodied in the output figures. The average annual wage for employees is about ₱2400 to ₱3650 for small and large firms, respectively. Capital requirements per worker are ₱7050 for small firms and ₱7600 for large.

Summarizing, the relative degree of capital intensity between small and large firms is unclear from presently available data. Wages are lower and labor requirements higher for small as opposed to large manufacturers. The next phase in this study will be to undertake a micro survey of firms to determine the relative profitability of smaller firms, the technical capability of these firms to produce improved agricultural equipment and the nature and magnitude of constraints they face in production and marketing of products.

Human energy measurement study

A cooperative study with the Department of Agricultural Economics at Cornell University has been undertaken to measure the energy (caloric) expended while performing specified tasks in the rice production process. The introduction of new rice technology coupled with growing unemployment problems has increased the need for such information. Briefly, the objectives are: (1) to determine the labor and energy requirements for alternative methods of performing the same task, as indicated below:

Task	Alternative methods
Land preparation	shallow vs deep paddy
plowing	carabao vs hand tractor
harrowing	carabao vs hand tractor
Planting	transplant vs mechanical seeder vs broadcast
Weeding	hand vs manual rotary vs power weeder vs herbicide
Harvesting	sickle vs hand dropper
Threshing-winnowing	
threshing	threshing frame vs IRRI table thresher
winnowing	hand vs native winnower

(2) in trials involving new machines, to evaluate the effort involved in the use of that new technique. Comparing the results of such trials with those of other techniques will enable designers to incorporate certain basic minimum features in machines to ensure operation with a minimum level of operator discomfort.

The present study makes use of a compact, lightweight instrument (SAMI) which can be easily carried as it records an individual's heartbeat within pre-set ranges. Research indicates that for every individual, there exists a definite linear relationship between heart rate and oxygen uptake at all but extremely strenuous levels of operation. Knowledge of this relationship permits indirect measurement of caloric energy expenditure. Figure 28 shows the calibration lines for two subjects and clearly exhibits the linear relationship between heartbeat and oxygen uptake. The two lowest points are the resting rates of the subject. The succeeding points represent higher levels of activity. Not only does the basic metabolic rate among individuals differ but the rate at which they burn energy as they perform progressively more strenuous tasks also varies as shown by the difference in slope between the two lines. The calibration data which have been collected are currently being tested for significant differences in slope individuals and between sex groups. By recording heartbeats and recording the time required to accomplish a specified amount of work, it is possible to determine not only the labor input (man-hours) but also the actual energy output (calories) in the performance of a task.

A few trials on planting, harvesting, and threshing-winnowing have been conducted. The information gathered so far (table 8) is, however, too limited to permit a meaningful analysis of the actual labor and energy requirements for these tasks. A detailed assessment of a more complete experiment involving these and other trials is currently underway and will be documented in the next report.

Task performance and cost studies

Work was continued during the current reporting period on an analysis of the comparative costs of alternative methods of land preparation,

seeding, weeding, and threshing. Using prices prevailing in the Philippines, total costs were estimated for all methods currently in use in the performance of a particular task. Figure 29 illustrates the comparative total cost for each task mentioned above. In land preparation, it is evident that animal power remains a viable economic alternative on small farms up to about 4.2 ha. Over a range of 4 to 50 ha, the use of hand tractors remains the least cost alternative above which larger four-wheel tractors are the preferred method. Empirical surveys of hand tractor use in Laguna Province indicate that the average size of farm employing a hand tractor is about 4.5 ha. In Central Luzon, where the use of four-wheel tractors is extensive, over 50 percent of the farmers owning and using four-wheel tractors own more than 50 ha. In addition, more than 83 percent of the rice farmers who own tractors use them for custom services which effectively increases the total area covered by an individual tractor.

Comparing alternative methods of seeding indicates that the IRRI designed mechanical seeder becomes a viable investment when utilized on more than 1.6 ha annually. While broadcast seeding is shown in fig. 29b, the low cost described must be a qualified observation because of the risk and uncertainty involved in the use of a seeding technique which requires a low-cost, effective herbicide and a reasonably high level of water control. It is probable that the transition from manual transplanting to the mechanical row seeder method of direct seeding will be more acceptable at the present time than a move from transplanting to direct broadcasting.

Comparing four alternative methods of weeding (fig. 29c), it was found that use of granular herbicides remains the least cost alternative over the complete range considered in the analysis. Again, however, the profitability of using granular herbicides must be qualified because of their nonavailability in many rice-growing areas of the Philippines. Comparisons among hand weeding, the manual Japanese rotary weeder, and the IRRI-developed power weeder indicate that handweeding is the least cost method for areas of less than 0.1 ha. Between 0.1 and 6 ha, the manual rotary method is the least cost technique. The IRRI-developed power rotary weeder does not become economically viable until the area increases to around 6 ha. Both the power and the manual rotary weeders, however, have application only where rice is sown in rows. Field surveys indicate that most farmers in Laguna Province use a combination of hand, manual rotary and chemical weeding.

The three lines in fig. 29d compare the alternative economics of three different systems of threshing. Where large volumes of grain can be consolidated for threshing, large stationary threshers are an attractive alternative. The IRRI-designed table thresher will replace manual threshing at an output of around 60 t/yr (report 12 for details relating to the table thresher).

Table 9 is a summary of the relative technical input-output relationships for a number of operations currently utilized in Philippine rice production. Work on the collection and analysis of these relationships will be continued.

Mechanization and employment study

A study was undertaken in cooperation with the Department of Agricultural Economics at IRRI to examine the possible effects of mechanization on employment and incomes in Philippine agriculture. The summary account given below discusses only the causes and emerging patterns of mechanization. The complete results of the study are presented elsewhere.*

Economic advantage of mechanization

Mechanization becomes profitable when it lowers the cost of producing a given commodity. Cost reductions can be achieved either by expanding output for a given set of resources or by producing a given output with a reduced level of inputs. In agriculture, the former method increases the productivity of land and of labor as well. The latter method normally increases labor productivity by substituting capital for labor.

Factor price relationships play an extremely important role, as can be seen by comparing mechanization activities in the Philippines with neighboring Taiwan and Thailand. Table 10 compares a selected number of factor proportions and factor prices in four Asian countries in the mid-1960's. In Taiwan, the ratio of price per horsepower of mechanical power to daily farm wage is 108 and the horsepower per agricultural worker is 0.07. For the Philippines the higher power cost and lower farm wage results in a price ratio of 147 and this is reflected in a lower horsepower per agricultural worker of 0.048. Although Thailand has a farm wage rate even lower than the Philippines, the average price of mechanical power is also lower so that both the factor price ratio (125) and the horsepower per agricultural worker (0.059) fall between those of Taiwan and the Philippines. Small farm size seems to have favored the use of two-wheel power tillers in Taiwan and Japan. On the other hand, rapid growth of four-wheel tractors in Thailand (a recent report shows the number to be 17,500 in 1968) has been encouraged by a price bias favoring large tractors versus power tillers.

The economic advantage of mechanization differs from crop to crop. Among the major agricultural commodities, sugar cane is at present the most highly mechanized. The use of four-wheel tractors over a large area gives rise to economies of scale which have made it profitable to substitute capital for labor even at relatively low wage rates. The institutional structure of the sugar cane industry further facilitates mechanization. In the major sugar cane producing areas of the Visayas, farms (sometimes called sugar plantations) are large, averaging about 50 ha in size. Landowners also have ready access to credit at reasonable rates through the sugar cooperatives. Given these circumstances, it is hardly surprising to find the major elements of labor unrest in agriculture centered in the sugar industry.

---

*R. Barker, W. H. Meyers, C. M. Crisostomo and B. Duff, "Employment and Technological Change in Philippine Agriculture," International Labor Review, Geneva (1972 forthcoming).

* Rice clearly does not offer the same economic advantage to mechanization as is found in upland crops such as sugar cane. First, there are some technical difficulties involved in the mechanization of certain tasks in rice production. Tractors do not operate efficiently in deep mud and can frequently be used only for plowing with water buffalo doing the harrowing. Second, the institutional and social structure of Philippine rice farming is not conducive to certain types of mechanization. Farm operating units are small and the arrangement for the sharing of costs between tenants and landlords (particularly land preparation where the tenant pays the entire cost) often makes ownership of presently available machinery an uncertain and unattractive investment.

Farmers in a recent survey in Laguna Province were asked to give their reasons for buying a hand tractor. Ninety of the 150 respondents indicated that they were concerned with the problems of keeping a water buffalo. Water buffalos were frequently stolen or poisoned, and their care and feeding was a nuisance. The first issue relating to security is not an economic but a social one. But the fact that farmers are concerned with the nuisance value of caring for the animal indicates that they are putting a high reservation price on their own labor or that they can afford the luxury of not owning a water buffalo. A somewhat smaller number of respondents (66) gave more direct economic reasons for the purchase of a tractor. It saves time in land preparation, can work faster, is easier and cheaper to operate, and can work continuously.

The latter responses suggest that mechanization might increase land productivity by allowing the farmer either to prepare his land more thoroughly or more quickly and thus reduce the time interval between crops. The latter factor is particularly important in areas where water is not available throughout the year (which is common) or where farmers are growing more than two crops (which is extremely rare in the Philippines at present). Experimental results do show that for an equivalent number of horsepower-hours per hectare used for land preparation, either from tractors or from water buffalo, the resulting yields will not be significantly different. However, it is possible that on some larger farming units, introduction of tractors may result in a higher horsepower input per hectare.

Government programs to promote mechanization

The Central BAnk of the Philippines (CB) has negotiated two loans with the International Bank for Reconstruction and Development (IBRD) to promote farm mechanization. The first CB-IBRD loan for $5 million covered the period from April 1, 1966 to May 31, 1968. The second, for $12.5 million, was initiated on September 1, 1969 and will expire on March 31, 1973. Both programs have been administered through the rural banking system and were designed specifically to encourage mechanization on small farms, defined for this purpose as operational units of not less than 5 ha or more than 50 ha in size. A comparison of the geographical distribution of loans extended for mechanization under this agreement with the resulting tractor ownership pattern in 1960 is shown in table 11. The bank loans were heavily concentrated in the rice-growing areas of Central Luzon.

The initial program resulted in a rapid expansion of power tillers as shown in table 12 and fig. 30. However, the total amount loaned was biased heavily in favor of four-wheel tractor purchases and, therefore, on larger farms as shown in table 13. When funds from the first credit line were exhausted, power tiller sales fell sharply.

The second CB-IBRD loan preceded the implementation of the floating peso exchange rate by only a few months. When the floating rate was adopted in February 1970, local peso counterpart funds for financing became difficult to obtain and the rise in machinery prices discouraged purchases. In addition, financial requirements for obtaining loans through the second CB-IBRD program became more strict. The more stringent participation requirements, in conjunction with higher machinery prices resulting from devaluation, reduced tractor and power tiller purchases significantly, although the impact was not as dramatic as the depletion of the first CB-IBRD credit line. The result has been that over the first half of the loan period of three and a half years, only a small part of the $12.5 million was utilized. The bias toward four-wheel tractor purchases (table 13) is even more pronounced than in the initial loan and power tiller sales fell to 7.4 percent of the total funds released.

The effect of other government policies on mechanization

The foreign exchange rate has a major effect on the domestic price of tractors and, hence, on tractor sales. An overvalued peso encourages the importation of tractors. The relationship between the cost of tractors and work animals and the level of farm wage rates also has an important influence on tractor sales. A relatively higher cost for work animals and labor will also encourage the substitution of tractors in land preparation.

The price indices for durable equipment, tractors, work animals, and farm labor have been plotted in fig. 31. It is apparent that government policies with respect to the price of foreign exchange and wages have been important determinants of changes in price of machinery and farm wages. As a result of a gradual devaluation of the peso (from ₱2=US$1 to ₱4=US$1), which had its major impact between 1959 and 1962, the price of machinery rose rapidly, and imports of tractors declined (table 12). For the period between 1963 and 1969, the cost of work animals and farm wages tended to increase somewhat more rapidly than the price of machinery and durable goods. It was during this period that the minimum wage was increased, and the first CB-IBRD loan program was consumated. The adoption of the floating rate in 1970 (approximately ₱6.4=US$1) again resulted in a sharp rise in the price of imported durable goods. But the cost of work animals and farm wages also rose simultaneously because of inflationary pressures and another increase in the minimum wage.

In summary, a combination of forces were at work to encourage or discourage mechanization or more specifically tractorization in the Philippines from 1960 onward. During the first years of the decade, mechanization was discouraged by the devaluation of the peso. But by 1963 the change in

the world sugar situation brought a boom to the Philippine sugar industry and tractor imports between 1963 and 1965 were relatively high. The initiation of the first CB-IBRD loan in 1966 followed by the introduction of the high-yielding rice varieties shifted the emphasis in mechanization to rice. But the adoption of the floating exchange rate in 1970 resulted in a sharp decline in tractor imports in 1970 despite the enactment of a second CB-IBRD loan agreement.

Although mechanization has increased rapidly in some parts of Luzon, it should be emphasized that tractors are used only on a small portion of Philippine farms. Approximately 10,000 four-wheel tractors and 10,000 power tillers service not more than 1.5 million hectares of land which includes nearly all of the land in sugar cane and perhaps 25 to 30 percent of the land in rice. On many of the farms employing tractors, animal power is still used for some tasks.

Retail survey of agricultural machinery industry

Project personnel undertook a survey of all major agricultural machinery dealers to determine the type, number, retail cost and features of agricultural equipment sold in the Philippines during the past year. This information is employed to establish baseline cost and performance parameters in the formulation of equipment designs emanating from the project. The current survey was concentrated principally on imported equipment including hand tractors and rice drying and processing equipment. Similar surveys will be conducted in the future and will include additional types of equipment. The results of this survey are presently being tabulated and will be summarized in future reports.

Application of value analysis in design studies

Bills of materials are being prepared for each project design in order to minimize component cost and final sales price. In addition, analysis of this type allows determination of the minimum critical machining and tooling requirements necessary to produce a particular machine. Also by specifying levels of manufacturing technology, the method constrains the machine designer to use fabrication and production techniques which are widely used in the developing countries. A critical element to the successful application of this technique involves the procurement of realistic market prices for materials and subassemblies employed in each machine. These prices are currently being assembled from local market sources in the Philippines.

Bills of materials have been prepared for the individual row metering seeder, the manually operated low lift bellows pump, and the second prototype of the 4-6 hp walking tractor. These bills of materials are submitted in conjunction with working drawings to interested manufacturers to assist them in the preparation of cost estimates.

SUBCONTRACT DEVELOPMENT, EXTENSION, AND TRAINING ACTIVITIES

Subcontracts

A major dimension of contract extension activities involves the negotiation and signing of subcontracts with agencies and institutions in countries outside the Philippines. The primary objectives of these programs are to evaluate and test IRRI-developed equipment under the specific environmental and economic conditions found in these areas. A secondary objective is to develop and stimulate interest in design and development activities among indigenous engineering institutions and manufacturing firms. During the preceding year, six subcontracts have been negotiated and signed in the Asian region. The agencies and cooperators are listed below:

Cooperating agencies in international test and evaluation program

1. India	All-India Coordinated Rice Improvement Project (AICRIP) Rajendranagar, Hyderabad 30
2. Indonesia	Directorate of Techniques, Djl. Ragunan, Pasarminggu, Djakarta
Cooperator	Institute Pertanian Bogor, Djl. Gunung Gede, Bogor
and	Gadjah Mada University , Jogjakarta
3. Malaysia	Malaysian Agricultural Research and Development Institute (MARDI), Jalan Swettenham, Kuala Lumpur
4. Taiwan	Joint Commission on Rural Reconstruction (JCRR) Nanhai Road, Taipei
Cooperator	Taiwan Agricultural Research Institute, Roosevelt Road, Section 4, Taipei
5. Thailand	Engineering Division, Rice Department, Ministry of Agriculture, Government of Thailand, Bangkok
6. W. Pakistan	Agricultural Marketing & Research Ltd., Lahore

In addition, the contract has developed informal test and evaluation arrangements with Centro Internacional de Agricultura Tropical (CIAT) located in Cali, Colombia and the International Institute of Tropical Agriculture (IITA) located in Ibadan, Nigeria.

Small-scale machinery project

With a ₱100,000 grant from the National Science Development Board of the Government of the Philippines, IRRI entered into a working agreement with the Nueva Ecija Land Reform Integrated Development Program to institute a pilot small-scale machinery test and evaluation program. The objectives of this program are to extend and evaluate promising agricultural machinery designs in a localized area of Central Luzon. Twenty table-type threshers, 10 mechanical seeders for pregerminated paddy, and 5 rotary power grain cleaners are programmed for use among ten farmer-cooperatives located in the area. The threshers have been in use during the current harvest season. Demonstrations and trials with the pregerminated paddy seeder are currently underway and use of the rotary grain cleaner will be undertaken during the coming three to four months.

Training

The project also undertook a short three-week training and orientation program for Mr. Rashid Khan, representing the Agricultural Marketing Organization Ltd. located in Lahore, West Pakistan.

As a part of a pilot small-scale machinery test and evaluation project being conducted in Central Luzon, fifteen farmer-cooperators have been trained by contract personnel in the use and maintenance of the IRRI-developed table thresher. These men are directing extension and demonstration programs involving this thresher in Nueva Ecija Province.

WORK PLAN
JANUARY 1 TO DECEMBER 31, 1972

DESIGN AND DEVELOPMENT

Field machinery

Individual-row hopper paddy seeder

Six seeders are on order from two local manufacturers. These machines will be field-tested and on a satisfactory evaluation, additional seeders will be procured and sent to subcontracting agencies for evaluation in other countries.

Upland seeder

The design of an upland seeder has been reported previously. The design will be modified to facilitate fabrication. A few seeders will be ordered from interested manufacturers in the Philippines. On a successful field evaluation of these seeders, additional machines will be procured for evaluation in other countries through the cooperating subcontracting organizations.

PTO multicrop thresher

Work on optimizing the different thresher elements will be continued. Efforts will be made to reduce the grain loss when threshing paddy with wet or decomposed straw. On a successful optimization of thresher components, a few machines will be ordered from local manufacturers for field evaluation.

Stripper harvester

Total grain loss with the experimental laboratory stripper has been reduced to 1.5 percent. Attempts will be continued to further reduce these losses with the laboratory unit. Lifting fingers will be installed in the laboratory unit to study the harvesting of lodged crops. A self-propelled four-row field stripper harvester will be designed based on the design criteria established with the laboratory test unit. The field stripper harvester will be tested at the Institute. If the machine performs well, a few machines will be ordered from interested manufacturers for more extensive field evaluation in the Philippines.

4-6 hp power tiller

The second prototype machine is being evaluated at the Institute. A few machines will be procured from local manufacturers for extensive field evaluation in the Philippines. On a successful field evaluation, approximately 20 tillers will be obtained from local manufacturers for field evaluation in other countries of Asia, Africa and South America.

Low lift bellows pump

Three different bellows sizes will be evaluated for operator fatigue. Improvements will be continued to facilitate operation. As soon as a satisfactory design is ready, a few units will be procured from local manufacturers for field evaluation in the Philippines. On a successful evaluation, approximately 40 pumps will be purchased from local manufacturers for shipment to various countries of Asia, Africa and South America for evaluation.

Drying and processing

Direct-flame drying

Further research will continue to evaluate the effect of the different variables such as exposure time, flame temperature, initial paddy moisture levels, on milling yields and moisture removal. If the experimental machine performs well, a commercial production model will be designed and evaluated.

Heated-sand drying and parboiling machine

The experimental laboratory unit can dry and parboil approximately 115 kg of paddy per hour. Attempts will be made to increase its capacity to about 250 kg/hr. A second machine will be designed for commercial production. A few units will be procured from local manufacturers for evaluation in the Philippines and some Asian countries.

Rice hull furnace

The design of the rice hull furnace is approaching completion. A few units will be ordered from local manufacturers for evaluation. If the commercial machines perform satisfactorily, the furnace will be released for regular commercial production in the Philippines. An axial fan and a flat bed drier which would be compatible with the hull furnace will be designed. The fan and the drier will be evaluated with the rice hull furnace to develop a complete low-cost paddy hot-air drying system for the smaller farmer. An oil-fired burner will be designed to replace the hull furnace in the drying system for areas where hull furnaces may not be desirable. Attempts will be made to initiate production of the various components of the drying system in the Philippines.

Paddy milling research

Research will be continued to find an economical replacement of the Engleberg machines for paddy hulling and milling. The machines are characterized by excessive broken grain and contaminated bran with powdered hull. It is rather difficult to predict the progress of this project at this moment. Attempts will be continued, however, to evaluate new concepts for processing paddy. If a promising concept is found, experimental machines would be fabricated and evaluated as a single-pass paddy hulling and polishing machine.

TEST AND EVALUATION

IRRI machinery development

Performance and manufacturing evaluation studies of the experimental machine developments within the Agricultural Engineering Department of IRRI will be continued. Reliability, durability, safety, and simplified production procedures will be emphasized. Machines currently under evaluation or to be evaluated include the individual-row hopper paddy seeder, multipurpose seeder, PTO thresher, stripper harvester, power grain cleaner, and single-axle power tiller. Technical assistance will be provided to cooperating agencies and manufacturers in evaluating IRRI equipment and encouraging production of the machines within the Philippines.

Transplanting

Time, labor, and cost input for current hand transplanting methods and new commercial mechanical transplanters from Japan will be determined. Analysis of data gathered will define design specifications and cost limits for the development of a simplified mechanical transplanting unit.

Subcontract test activities

Subcontracts for test and evaluation of IRRI-developed equipment have been established with Taiwan, Thailand, India, and West Pakistan. Additional subcontracts are under negotiation. The Test Section will monitor, supervise, and advise the subcontract test and evaluation activities established under these subcontracts. Data derived from these test activities will be processed and analyzed for updating and improving the machines. Assistance will be provided in formulating the manufacturing extension program where machines are proven acceptable.

Commercial machinery evaluation

Imported equipment for the various production operations has attained limited acceptance. Several machines of local design and manufacture are available but receive limited market acceptance. An evaluation of these machines' performance characteristics and cost for tropical agricultural production will be made. Machines to be included in this evaluation are power tillers, seeders and transplanters, threshers, cleaners, and drying and processing equipment. Evaluation of data from these studies will be used in formulating recommended design specifications and performance characteristics for new machines and assisting manufacturers in improving the machines currently available.

ECONOMICS OF MECHANIZATION

Task studies of rice production operations

The purpose of these studies is to assess output levels and input requirements under alternative technologies for each task in the rice production and processing sequence. Particular emphasis is being placed on the analysis of investment requirements, performance rates and labor productivity within a wide range of institutional arrangements such as type of tenancy and farm size. The results will be used to establish design parameters and development priorities for machines emanating from the program.

Individual project economic studies

At selected stages of design development, each project is subjected to a comprehensive series of tests, including an economic evaluation to ensure adherence to baseline performance and cost parameters.

Case studies of agricultural equipment industry

These studies are an attempt to isolate the specific factors which inhibit growth and expansion in the production and marketing of agricultural equipment. The analyses consist of indepth examinations of particular characteristics relating to the production, marketing, and financing of agricultural machinery.

CB-IBRD loan assessment program

Since 1966, the Central Bank of the Philippines has administered two World Bank loans totaling $17.5 million which are allocated for the purchase of agricultural machinery. The present study is an attempt to determine the impact of this credit program on levels, patterns and types of mechanization in the Philippines. Work on this project will be completed during the coming six months.

Grain loss study

This study is an attempt to determine the extent and causes of field losses in the harvesting and threshing of palay. The nature of such losses using alternative handling and threshing system will provide an indication of the economic benefits attributable to the reduction in such losses to be derived from improved equipment.

Energy measurement study

The objective of this study is to assess actual human energy expenditures incurred in the performance of particular field tasks in the production of rice. By monitoring and recording cardiac output using technologies embodying various degrees of labor intensity, an estimate of relative energy expenditures can be made. Information from these measurements

can be used in approximating the range of human energy expenditure which is acceptable in a machine of a specific type performing a specific task. This is a joint project being undertaken with Cornell University.

National Science Development Board pilot machinery project

With a ₱100,000 grant from the NSDB, a number of IRRI designs are presently being purchased and placed with farmer-cooperators in the Nueva Ecija area. The purpose of this project is to assess the economic and technical suitability of small-scale machinery in lowland rice production. IRRI will monitor this project and gather test and evaluation data to be used in determining the viability of the equipment. The project will continue for two cropping seasons, and if successful may be renewed for a subsequent period.

Small-scale industry study

Work will be continued on the small-scale industry study currently underway. Phase II will include a micro-economic survey of selected firms producing small-scale equipment, machinery and selected consumer goods. The objectives will be to gather information on capital requirements, production and marketing limitations and labor absorption potentials to specify the constraints hindering growth in the small-scale sector.

Rice milling and processing technologies

A basic study is being undertaken to ascertain the technical and economic characteristics of small and medium-scale rice milling and processing plants in the Philippines. The major focus of this study will be to determine the milling efficiency of different types and sizes of plants, to assess the economic structure of milling operations and to compare currently utilized technologies with modern, improved processing methods.

PERSONNEL LIST

Personnel and their respective man-months engaged on the project during the past six months, July 1 - December 31, 1971, and projected requirements, January 1- June 30, 1972:

Position	Name	Fr: 7- 1-71 To: 12-31-71	Fr: 1- 1-72 To: 6-30-72
Development Engineer & Project Leader	A. U. Khan[a/]	4.5	4.5
Agricultural Economist	B. Duff	6	6
Evaluation Engineer	F. Nichols	6	6
Assistant Design Engineer (Machinery)	P. Cabanos	6	6
Assistant Design Engineer (Machinery)	J. Policarpio	1.33	6
Assistant Design Engineer (Processing)	A. Manalo	6	6
Research Assistant (Economics)	N. Orcino	6	6
Research Assistant (Engineering)	N. Navasero	6	6
Research Assistant (Engineering)	A. Amilhussin	2	0
Research Assistant (Engineering)	J. Arboleda	1.33	6
Research Assistant (Engineering)	E. del Rosario	6	6
Research Assistant (Test & Evaluation)	C. Padolina	6	6
Research Aide (Economics)	I. Estioko	6	6
Research Aide (Economics)	B. Samson	6	6
Research Aide (Test & Evaluation)	B. Ramos	6	6
Draftsman	F. Valotjot	6	0
Draftsman	F. Cabrales	6	6
Draftsman	B. Buan	3	6
Secretary	C. Jizmundo	6	6
Secretary	V. Maraan	6	6
Shop Foreman	S. Gutierrez	6	6
Machinist	Z. Borja	6	6
Machinist	A. Dizon	6	6
Tinsmith	E. Dungo	0	6
Tinsmith	R. Santos	6	6
Welder	A. Barot	6	6
Mechanic-Operator	J. Silos Jr.	6	6
Shop Mechanic	R. Dignadice	6	6
Shop Mechanic	M. Macatangay	6	6
Shop Mechanic	P. de Mesa	6	6
Shop Mechanic	F. Flores	6	6

[a/] Three-fourths time charged to the Contract.

Position	Name	Fr: 7- 1-71 To: 12-31-71	Fr: 1- 1-72 To: 6-30-72
Laborer (Shop helper)	M. Castro	6	6
Laborer (Student assistant)	L. Lumang	1.25	6
Laborer (Student assistant)	D. Guevarra	1	1

Table 1. Seed metering frequency distribution for three hoppers shown in fig. 2.

Number of seeds per drop	Hopper 1 frequency	Hopper 2 frequency	Hopper 3 frequency
0	3	5	0
1-4	47	46	10
5-10	24	21	26
11-15	11	4	19
16-20	4	2	15
21-25	0	2	9
26-30	0	0	5
31-35	0	0	0
No. of observations	89	80	84
Ave. seed dropped/hill	5.96	12.23	4.61

Table 2. Threshing losses from three screens on PTO thresher.

Paddy condition	Moisture content		Losses (%)				Output	
	Grain %	Straw %	Inner screen	Middle screen	Outer cylinder	Total	Kg/hr	%
Dried in	14.0	47.0	0.30	2.14	0.10	2.5		97.5
stack	14.0	50.0	0.87	1.52	1.17	3.5	603	96.5
Freshly	26.0	71.5	2.76	1.00	0.11	3.8		96.2
harvested	20.0	75.6	2.42	0.59	0.12	3.1		
Decomposed	34.6	78.2	15.09	0.84	0.04	15.9		84.1
wet straw	30.8	70.0	10.42	2.55	0.21	13.2	636	86.8

Table 3. PTO thresher performance with screens lengthened by 30 cm.

Engine rpm	1800	Purity, %	93
PTO rpm	540	Grain moisture content, %	20.3
Thrower rpm	510	Straw moisture content, %	60.2
Test duration	17.3 min	Grain	0.47
Output, cav/hr	22.5	Variety	IR480
Loss, kg	7.0	Length of cut, cm	53.34
Loss, %	2.7		

Table 4. Effect of plant-gathering chain speed and bar spacing on grain losses with the laboratory stripper harvester.

Gathering chain speed x ground speed, m/s	30.48 cm Plant-gathering bar spacing					15.24 cm Plant-gathering bar spacing					7.62 cm Plant-gathering bar spacing				
	Scattered loss*		Unthreshed loss		Grain stripped	Scattered loss*		Unthreshed loss		Grain stripped	Scattered loss*		Unthreshed loss		Grain stripped
	gm	%	gm	%	gm	gm	%	gm	%	gm	gm	%	gm	%	gm
2x0.24	6.8	0.9	127.0	14.3	756.0	15.1	1.8	31.5	3.7	793.1	13.2	1.5	10.96	1.2	847.4
3x0.24	21.0	0.9	120.0	13.8	725.8	14.5	1.7	24.6	2.8	818.0	9.4	1.1	16.57	2.0	778.3
4x0.24	20.5	2.7	64.4	7.7	747.9	16.8	2.0	29.0	3.3	822.0	8.3	1.0	13.12	1.6	785.2
5x0.24	21.8	2.7	77.2	8.7	789.7	13.7	1.6	21.8	2.5	831.8	11.8	1.3	12.1	1.3	851.0
6x0.24	19.0	2.2	53.0	5.9	841.4	19.7	2.1	21.8	2.3	889.8	14.8	1.5	11.55	1.2	924.0
7x0.24	31.2	3.9	51.0	5.9	775.8	27.4	3.0	18.7	2.0	879.2	13.6	1.3	17.50	1.7	975.2
8x0.24	30.6	3.9	36.2	4.5	754.7	33.3	3.5	19.1	1.9	919.3	21.3	1.9	13.26	1.1	1090.6
9x0.24	42.0	5.2	35.0	4.2	766.8						23.3	2.1	10.73	0.9	1064.2
10x0.24	72.0	8.5	37.0	4.1	788.0										
11x0.24	98.1	11.0	26.5	3.0	758.0										
12x0.24	140.0	16.7	18.9	2.2											

*% scattered loss = $\frac{\text{scattered loss}}{\text{scattered loss + grain stripped}} \times 100\%$

Table 5. Performance test of Japanese drier.

	Test 1	Test 2	Test 3
Rice variety	mixed	IR-24	IR-24
Weight of rice, kg	1069	887	1188
Moisture content: wet grain, %	25.9	21.75	26.9
dried grain, %	13.6	13.6	13.5
Drying time, hr	11.25	6	10.5
Evaporation, kg/hr	13.50	13.06	18.18
Total water removed, kg	151.87	78.36	190.89
Fuel consumption: kerosene, kg/hr	0.87	0.82	1.17
electricity, kwhr	3.09	0.75	1.9
Fuel used per kilogram of water removed:			
kerosene, kg/kg	0.064	0.063	0.064
electricity, kwhr/kg	0.022	0.057	0.104
Drying air temperature, °C	42.2	48.8	48.8
Ambient temperature: dry bulb, °C	27.0	26.6	27.5
wet bulb, °C	25.5	24.8	25.6
Ambient relative humidity, %	89	88	90
Percent head grain: artificial drying	56.8	46.4	54.3
air drying (control)	60.5	56.4	63.6

Table 6. Rate of seeding and growth stand using IR paddy seeder.

Hopper opening	Seeding rate (kg/ha)[a]	No. of seedlings/sq m[b]
1	25	47
2	42	98
3	76	166
4	85	192

[a] Pregerminated seeds incubated 48 days.

[b] Counted 9 days after seeding.

Table 7. Effect of depth and rate of seeding pregerminated paddy seeds in flooded soils.[a/] (Grain yield at 14% moisture content, means of three replications).

Seeding rate, kg/ha	Depth (cm)	No. of seedlings/sq m		No. of tillers/sq m		Grain yield, kg/ha		Straw yield, kg/ha	Grain-straw ratio
		IR579	IR127	IR579	IR127	IR579	IR127	IR127	IR127
20-35	0	59 c	84 ef	429 abc	256 bc	6358 abc	6605 ab	7067 a	1.10 a
	1.91	59 c	88 ef	377 c	241 c	5988 bc	6890 a	7077 a	0.97 ab
	3.81	52 c	70 f	375 c	182 c	5850 bc	5539 c	5384 b	1.04 ab
40-55	0	79 c	111 cde	451 ab	285 abc	6524 ab	6814 ab	8038 a	0.86 b
	1.91	81 c	119 cd	428 abc	271 bc	6080 bc	6772 ab	6963 ab	0.99 ab
	3.81	69 c	106 de	395 bc	288 abc	6612 ab	6593 ab	7067 a	0.95 ab
65-75	0	142 b	139 bc	440 ab	251 bc	6797 a	6206 b	7142 a	0.91 ab
	1.91	134 b	137 bc	444 ab	280 bc	6014 bc	6794 ab	7587 a	0.92 ab
	3.81	170 a	149 b	455 a	254 bc	6410 ab	6565 ab	7080 a	0.93 ab
85-100	0	184 a	187 a	474 a	302 ab	6214 abc	7156 a	7200 a	1.00 ab
	1.91	140 b	183 a	473 a	339 a	5728 c	7175 a	8040 a	0.91 ab
	3.81	120 b	163 ab	458 a	307 ab	5801 c	7026 a	7249 a	0.98 ab

[a/] Any two means followed by the same letter are not significantly different at 5% level using Duncan's multiple range test.

Table 8. Energy input for specified tasks in rice production, IRRI, 1971.

Task/technology	Unit	No. of OBS	Total man-min/unit	Energy input K-cal/min	Energy input K-cal/unit
SEEDING					
Mechanical seeder	ha	1	312.00	11.81	3684.72
Transplant	ha	10	6415.80	3.09	17937.25
Broadcast	ha	8	114.00	6.00	684.00
WEEDING					
Hand, 1x	ha	3	3955.80	5.59	22111.69
Rotary, 2x	ha	2	3575.40	6.35	22739.57
Power, 2x	ha	2	1521.60	7.75	11826.52
Herbicide	ha	1	114.00	6.00	684.00
HARVESTING					
Sickle	ha	19	3899.22	5.02	18790.77
THRESHING					
"Hampasan"	ton	3	980.26	5.20	5096.04
IRRI table thresher	ton	4	884.24	3.73	3296.00

Table 9. Comparative technical coefficients for alternative rice production tasks.

	Unit	Ave. labor input (days)	Ave. animal input (days)	Ave. machine input (days)	Unit output capacity (per day)
LAND PREPARATION					
Carabao	ha	20.00	20.00	-	0.05
Hand tractor	ha	10.46	-	5.23	0.19
4-wheel tractor	ha	0.90	-	0.45	2.20
SEEDING					
Transplanting	ha	15.00	-	-	0.07
Mechanical seeding	ha	1.00	-	1.00	1.00
Broadcast seeding	ha	0.38	-	-	2.63
WEEDING					
Manual	ha	62.50	-	-	0.02
Hand rotary	ha	25.00	-	25.00	0.04
Power rotary	ha	6.25	-	6.25	0.16
Herbicide	ha	0.38	-	-	2.63
HARVESTING					
Ani-ani knife	ha	30.00	-	-	0.03
Sickle	ha	10.00	-	-	0.10
Reaper	ha	5.00	-	5.00	0.20
Binder	ha	0.50	-	0.50	0.25
THRESHING					
Manual	MT	6.25	-	-	0.16
Pedal thresher	MT	3.64	-	1.82	0.55
Table thresher		2.80	-	0.47	2.13
Stationary thresher		0.50	-	0.04	24.00

Table 10. Selected indicators of factor use and factor prices in the Philippines, Thailand, Taiwan, and Japan in the mid-1960's.

	Philippines	Thailand	Taiwan	Japan
Cultivated land area (1000 ha)	6,042	11,267	890	5,996
Agricultural employment (1000)	5,824	10,200	1,867	15,238
Number of draft animals (1000)	2,052	5,174	360	1,782
Mechanical horsepower available	278,900	605,200	130,253	15,997,300
a) Power tillers	12,560	5,200	110,103	15,516,910
b) Tractors	266,340	600,000	20,150	480,390
Price of mechanical power ($/hp)	129	67	112	68
a) Power tillers	154	133	112	68
b) Tractors	128	66	-	-
Farm wages ($/day)	0.88*	0.53	1.04	2.60*
Factor price ratio (5)/(6)	147	126	108	26
Horsepower per agricultural worker	0.048	0.059	0.070	1.05

*Since meals were given together with money wages, money wages reported for the Philippines was raised by 33% and for Japan by 10%.

Source:

1. Philippine data refer to 1967.

Cultivated land area and agricultural employment, (1) and (2): estimated by C. Crisostomo in "Sources of Output Growth in Philippine Agriculture, 1948-1968." (Unpublished M.A. thesis, University of the Philippines, 1971, forthcoming). Basic data from Census of Agriculture, 1948 and 1960 by the Bureau of the Census and Statistics and Philippine Statistical Survey of Households by the National Economic Council.

Number of draft animals (3): APO Expert Group Meeting in Agricultural Mechanization, APO Project SYP/III/67, Tokyo, October 1968, Vol. II.

Mechanical horsepower available (4): Bureau of Agricultural Economics, Department of Agriculture and Natural Resources, Philippines.

Prices of mechanical power (5): Tillers from N. Alviar, "An Economic Comparison between Tractor-Operated and Carabao-Operated Rice Farms." (Unpublished M.S. thesis, University of the Philippines, 1969). Four-wheel tractor from the Department of Economic Research, Central Bank of the Philippines.

Farm wages (6): Basic data from the Bureau of Agricultural Economics, Department of Agriculture and Natural Resources, Philippines.

2. Thailand data refer to 1963-64 while Taiwan and Japan data refer to 1965-1966. Source of data, APO Expert Group Meeting in Agricultural Mechanization, APO Project SYP/III/67, Tokyo, October 1968, Vol. II.

Table 11. Regional distribution of tractors and CB:IBRD loans from first $5 million credit line.

	Tractors owned[a/] 1960	CB:IBRD $5.0 million[b/] loans 1966-1968
	percent	
Luzon (excluding Pampanga)	37	59
Western Visayas and Pampanga	35	22
Visayas and Mindanao (excluding W. Visayas)	28	19

Sources: a/ Bureau of the Census and Statistics, Philippines.

b/ Department of Rural Banks, Central Bank of the Philippines. (Eighty-eight percent of total loans during the period were for four-wheel tractors and power tillers and attachments.)

Table 12. Imports, sales and CB:IBRD loans for tractors and power tillers in the Philippines, 1950-1970.*

	Total imports 4W tractors	Total sales 4W tractors	Change in inventory	Total sales power tillers	Total sales tractors and power tillers	No. of loans released for tractors and power tillers
1950-1959	5067					
1960	297					
1961	102	813	(711)			
1962	262	994	(732)			
1963	918	863	55			
1964	859	950	(91)			
1965	769	707	62			
1966	518	760	(242)	1932	2692	198
1967	2203	1568	635	3058	4626	1274
1968	1443	1575	(132)	1873	3448	493
1969	1390	1353	37	910	2263	196
1970	764	974	(210)	475	1449	192
1971 (Jan-May)	246			258		176

*Source: Bureau of the Census and Statistics and Agricultural Machinery Dealers Association, Philippines.

CB:IBRD refers to a loan program for agricultural mechanization from the International Bank for Reconstruction and Development implemented through the Central Bank of the Philippines.

Table 13. Distribution of CB:IBRD loans, by item purchased.

Item	Percent distribution	
	$5 million loans Apr 1966 to May 1968	$12.5 million loans[a] Sept 1969 to Aug 1971
4-wheel tractors	66.3	68.6
Power tillers	21.6	7.4
Other	100.0	100.0

[a] Less than 20% of the total has been released during the first 2 years of this 3½-year program.

Source: Department of Rural Banks, Central Bank of the Philippines.

Fig. 1. Six-row multihopper seeder.

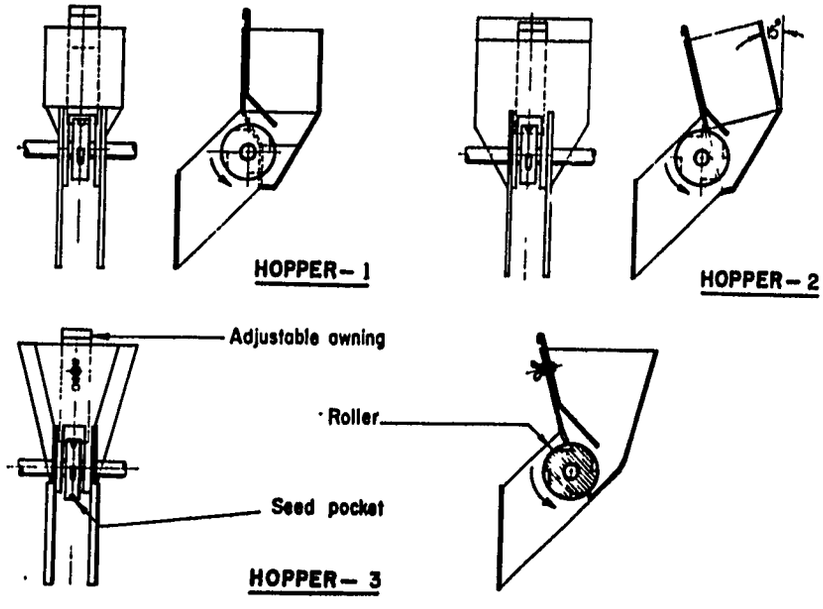

Fig. 2. Three hopper designs evaluated for the six-row multihopper seeder.

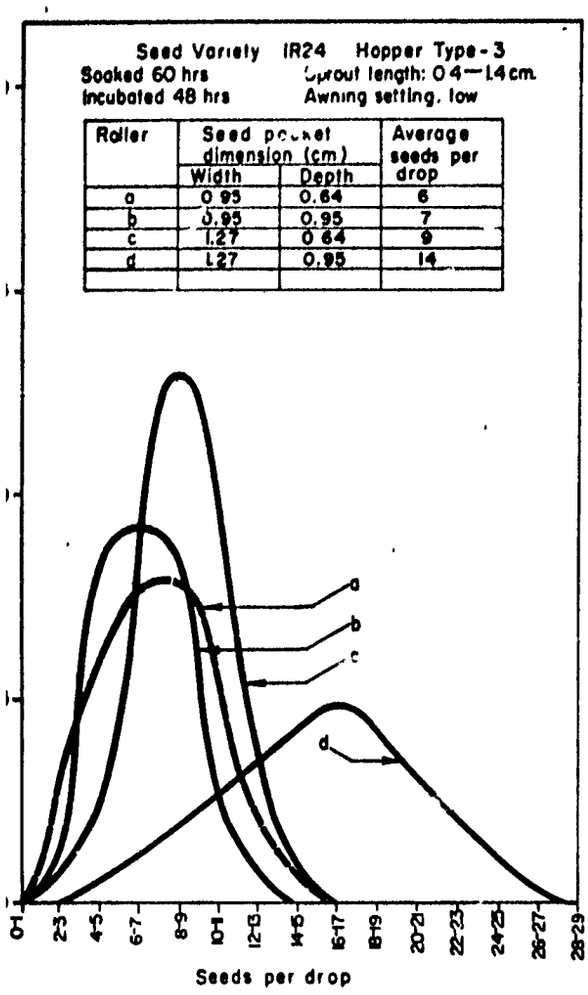

Roller	Seed pocket dimension (cm)		Average seeds per drop
	Width	Depth	
a	0.95	0.64	6
b	0.95	0.95	7
c	1.27	0.64	9
d	1.27	0.95	14

Fig. 3. Metering performance of four seed pockets for the six-row multihopper seeder.

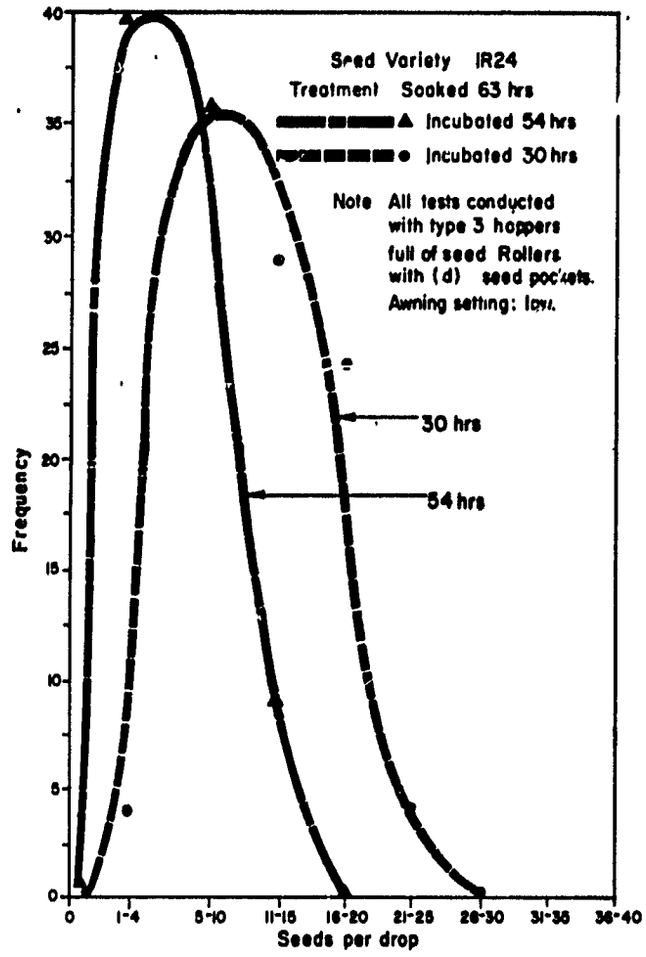

Fig. 4. Effect of incubation on seed distribution of six-row multihopper seeder.

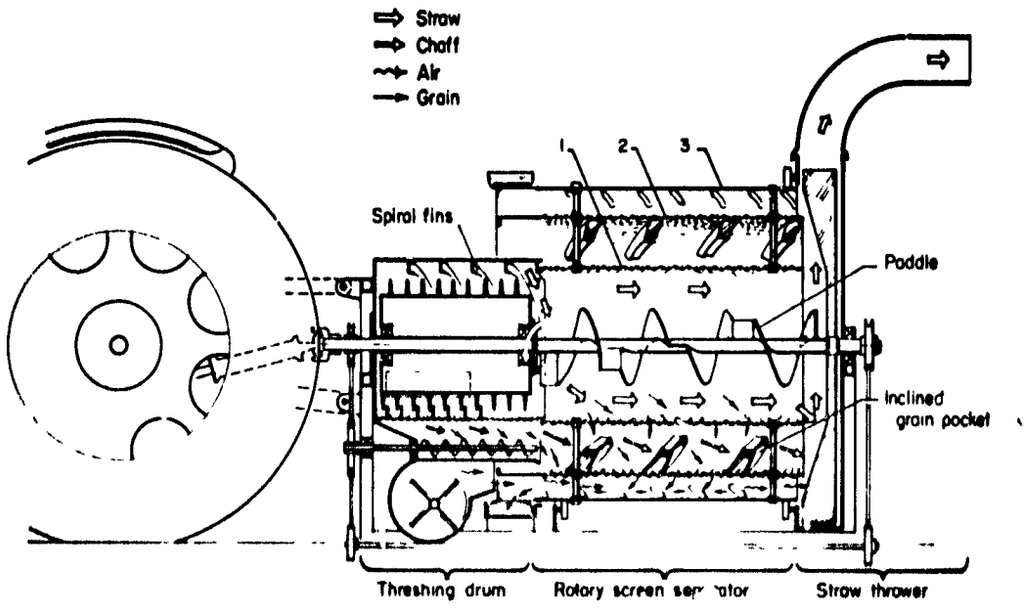

Fig. 5. Schematic drawing of modified tractor pto-driven thresher.

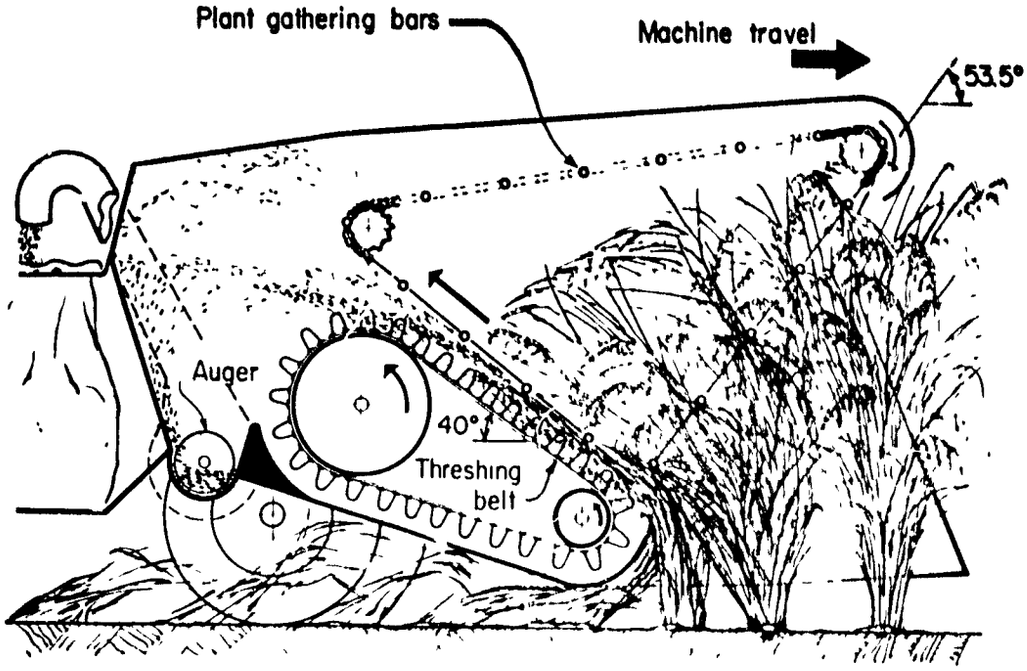

Fig. 6a. Schematic drawing of field stripper harvester.

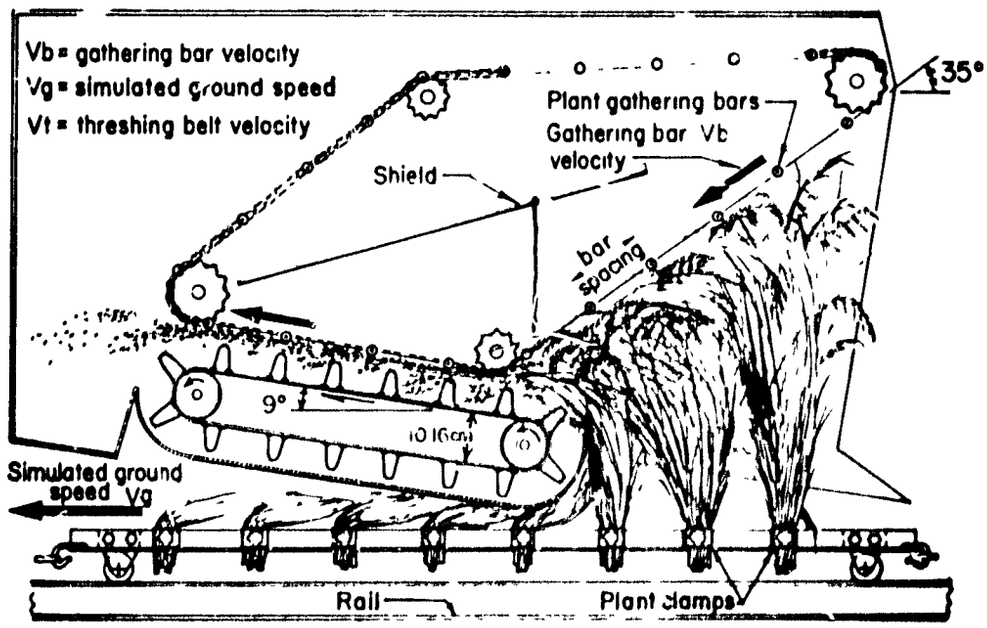

Fig. 6b. Schematic drawing of laboratory stripper harvester.

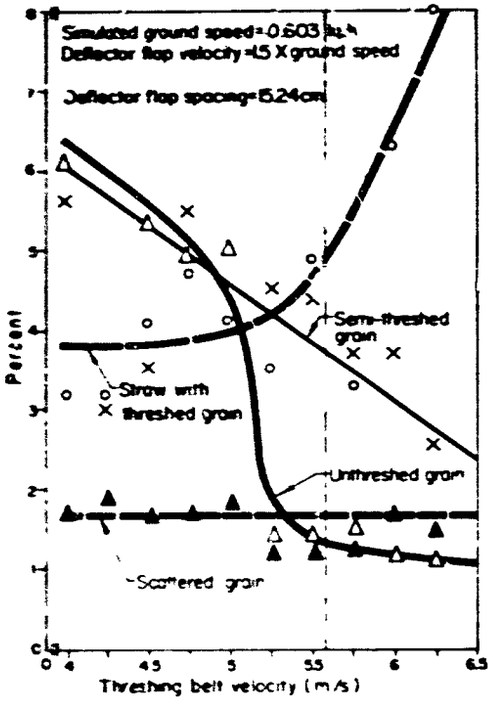

Fig. 7. Laboratory stripper harvester performance at different threshing belt velocities.

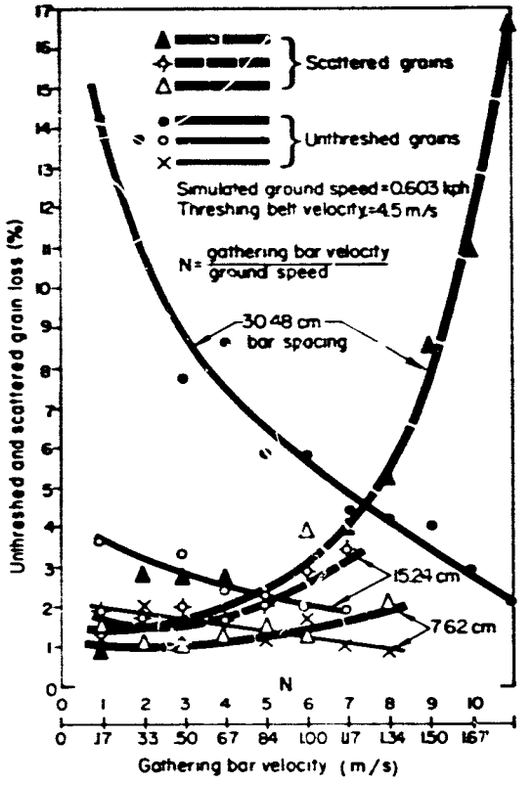

Fig. 8. Laboratory stripper harvester performance at different gathering bar velocities

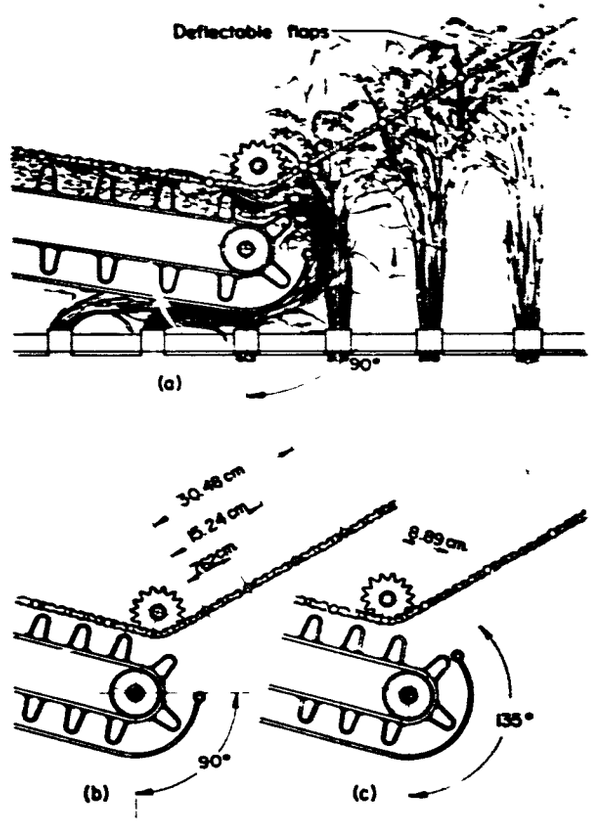

Fig. 9. Details of laboratory stripper harvester

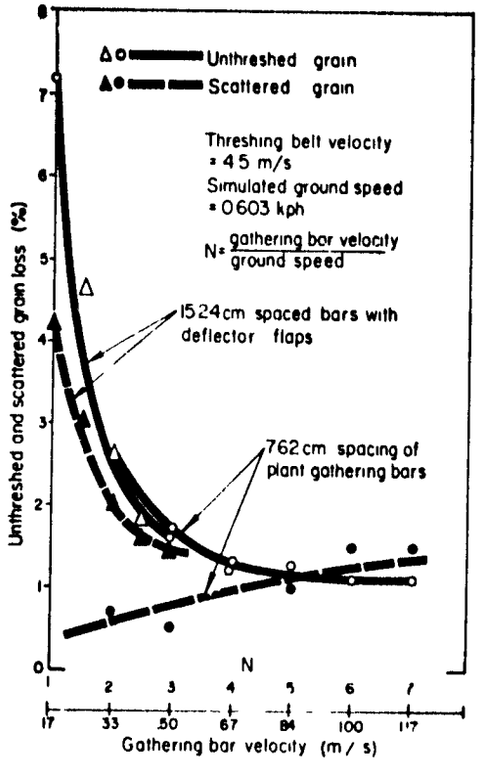

Fig. 10. Laboratory stripper harvester performance with gathering bars and deflectable flaps.

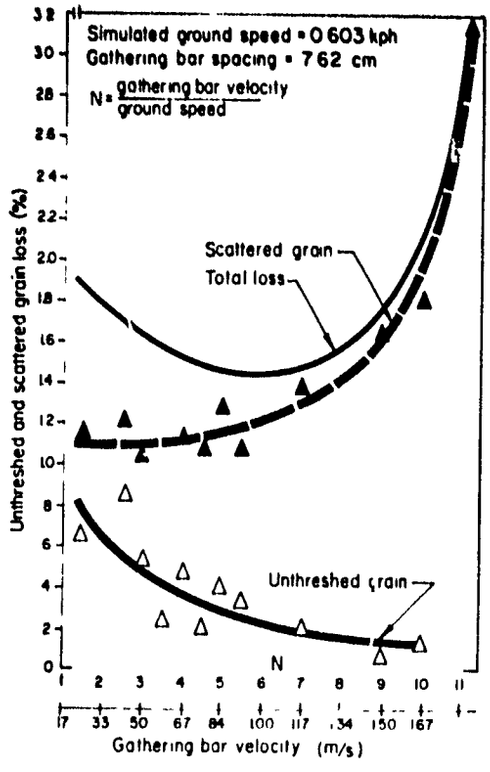

Fig. 11. Laboratory stripper harvester performance with 7.62 cm spacing after modification of Fig. 9c at different gathering bar velocities.

Fig. 12. First prototype of power tiller.

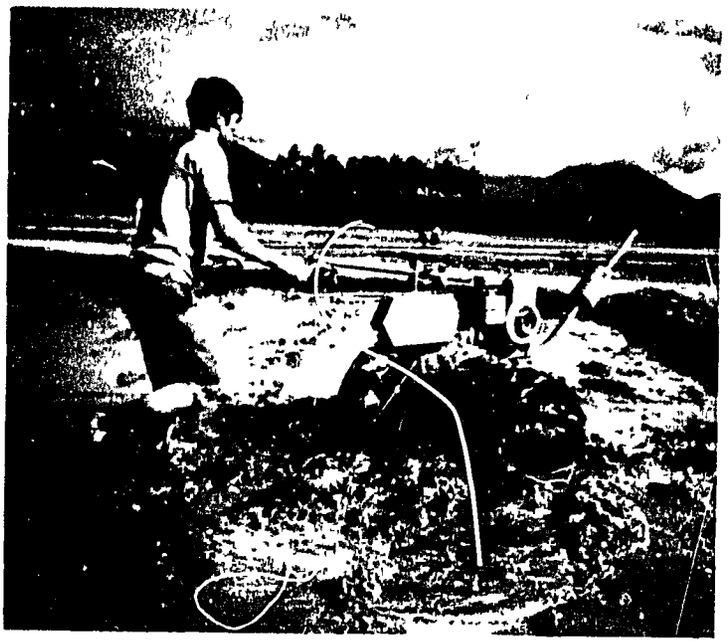

Fig. 13 Second prototype of power tiller.

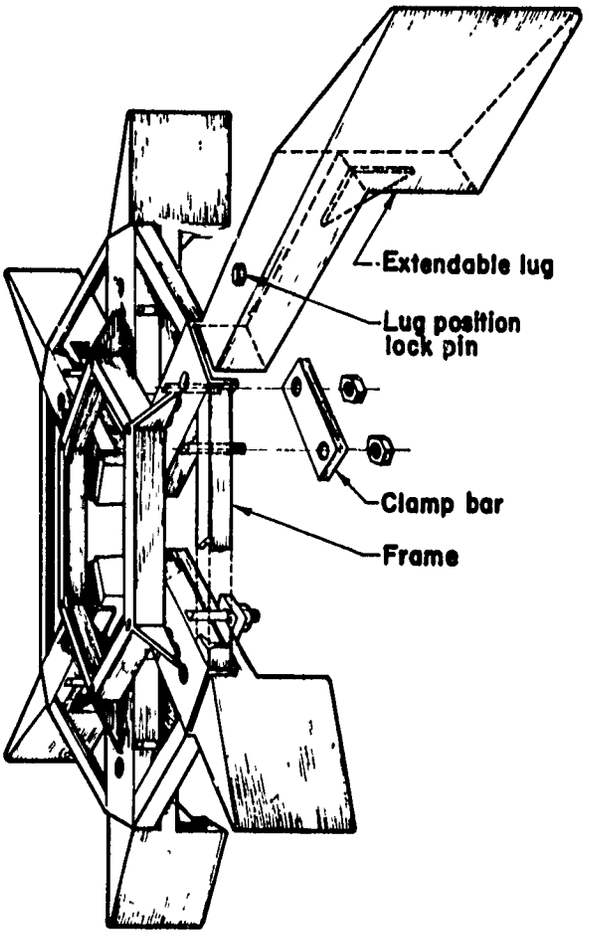

Fig. 14. Tractor-assisting extendible lug wheel for rubber tired wheel.

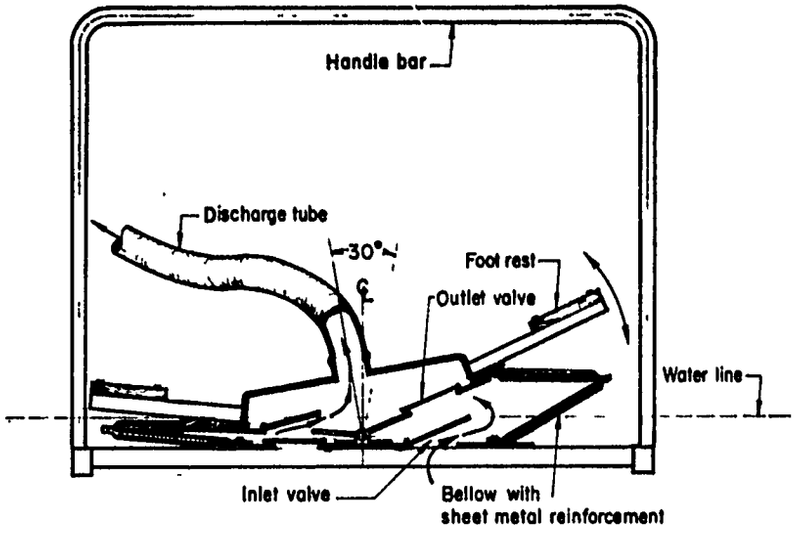

Fig. 15. Schematic drawing of foot-operated low lift bellows pump.

Fig. 16. Foot-operated low lift pump.

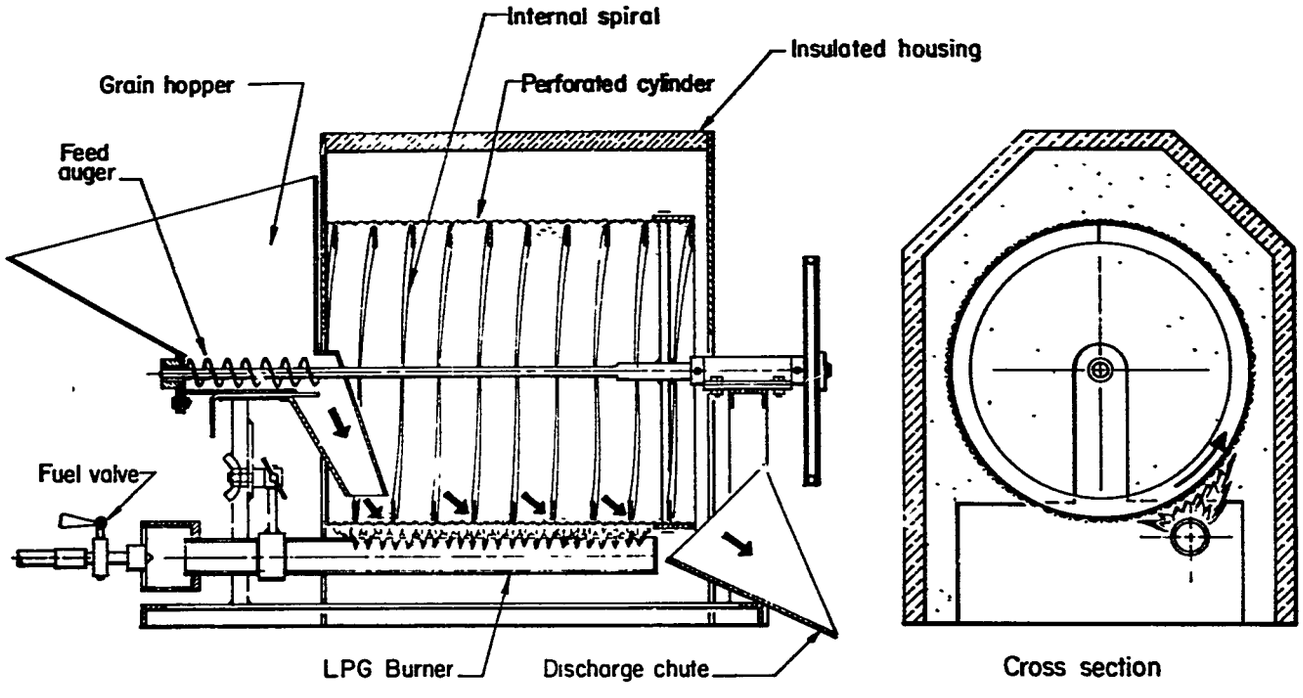

Fig. 17. Schematic drawing of a direct flame laboratory grain dryer.

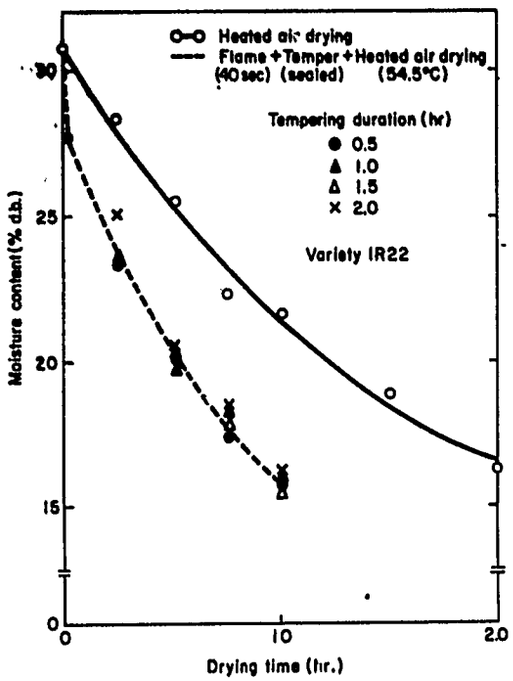

Fig. 18. Flame exposure effect on drying time.

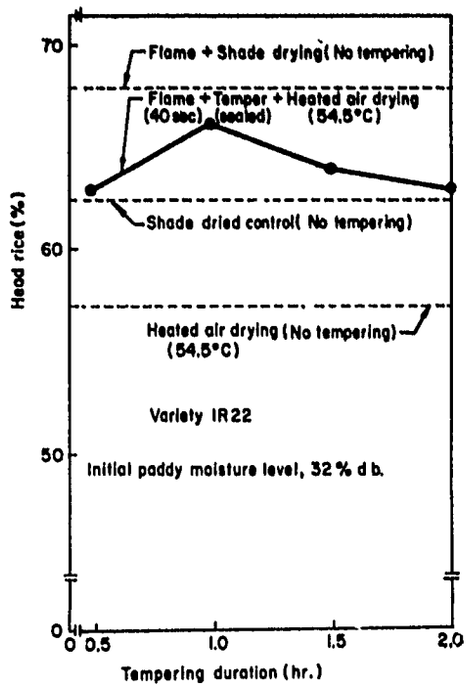

Fig. 19. Head rice yields for different drying treatments.

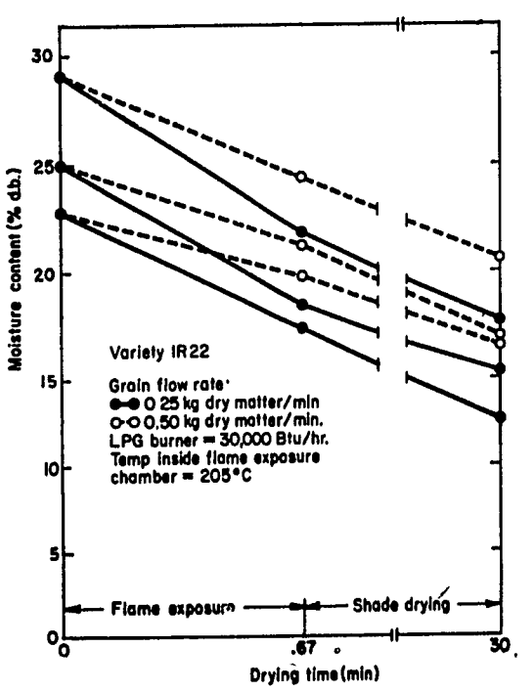

Fig. 20. Flame exposure effect on drying rate.

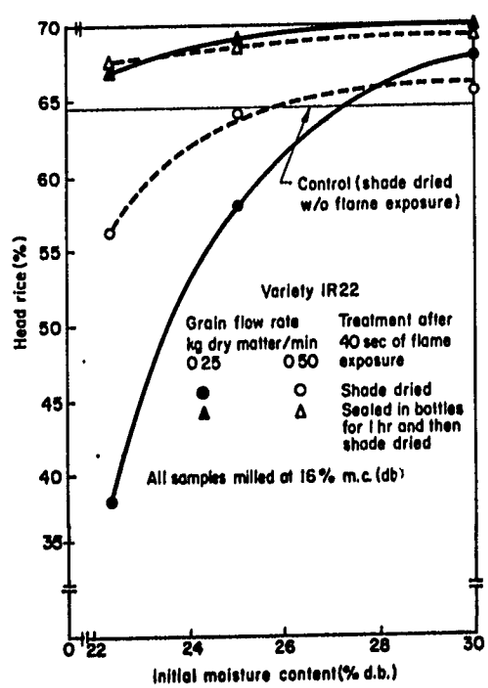

Fig. 21. Effect of initial paddy moisture content on head rice yield.

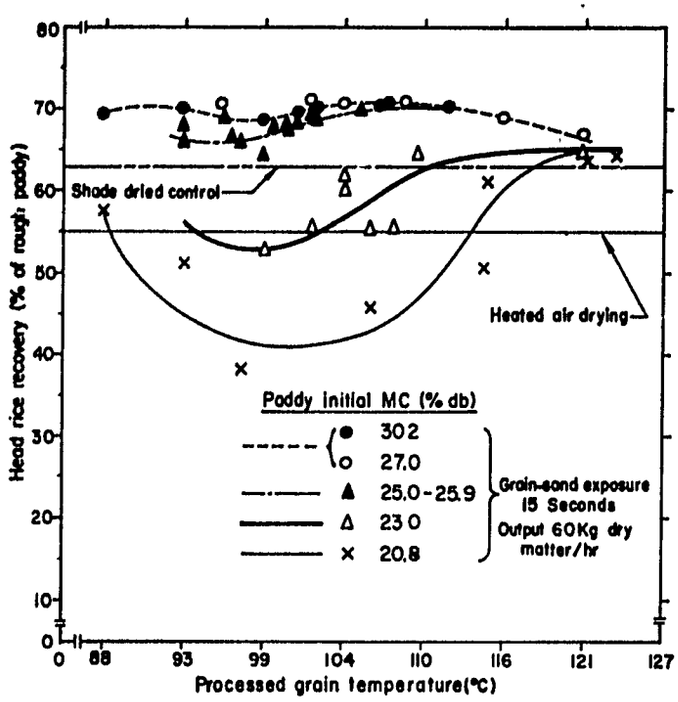

Fig. 22. Head rice recovery at different initial moisture levels when paddy is dried by the heated sand process.

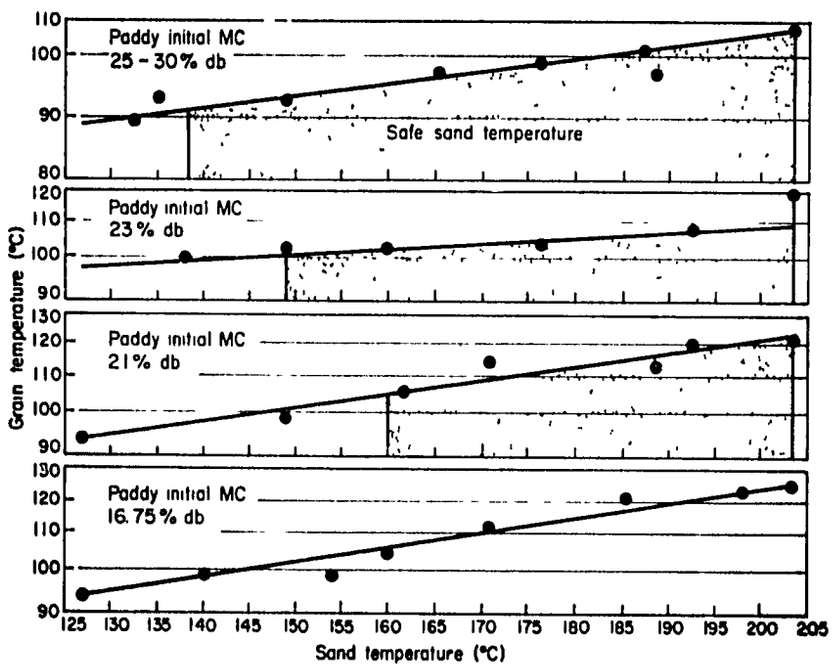

Fig. 23. Safe sand temperatures for processing paddy at different initial moisture levels.

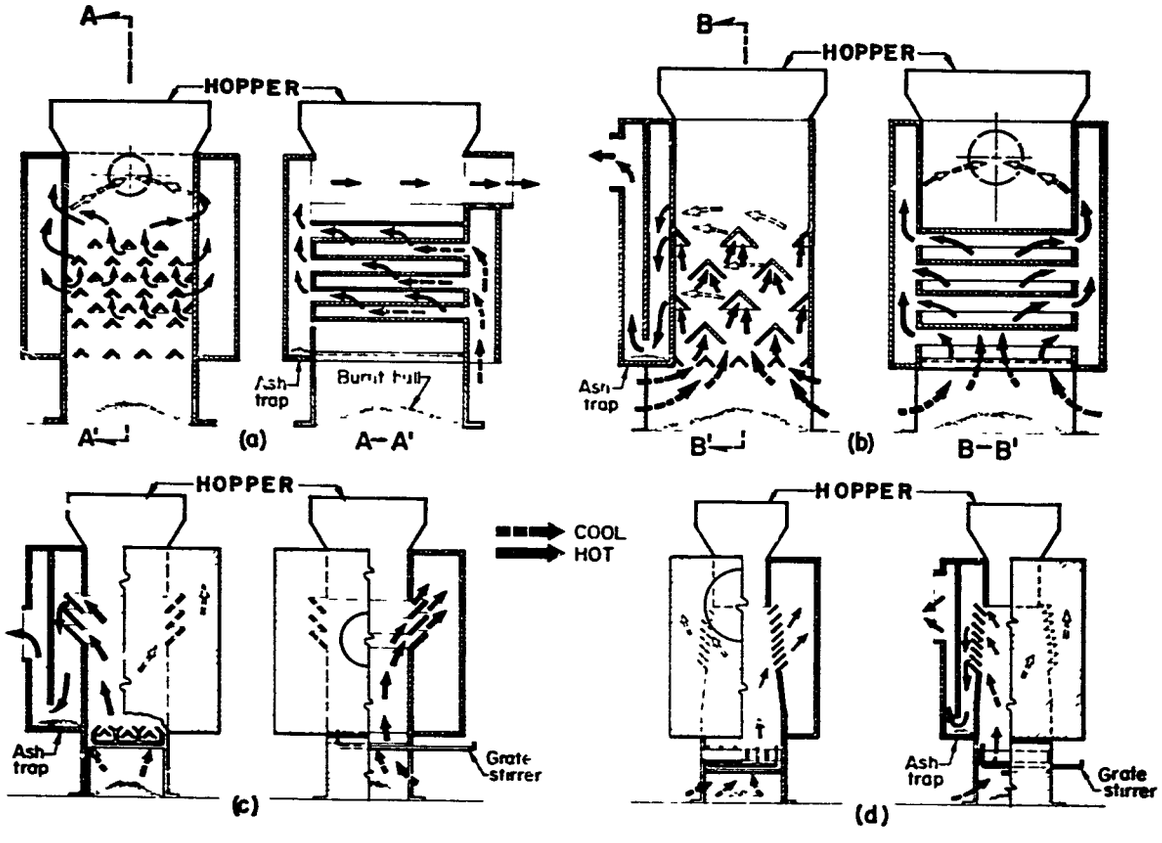

Fig. 24. Four experimental rice hull furnace designs.

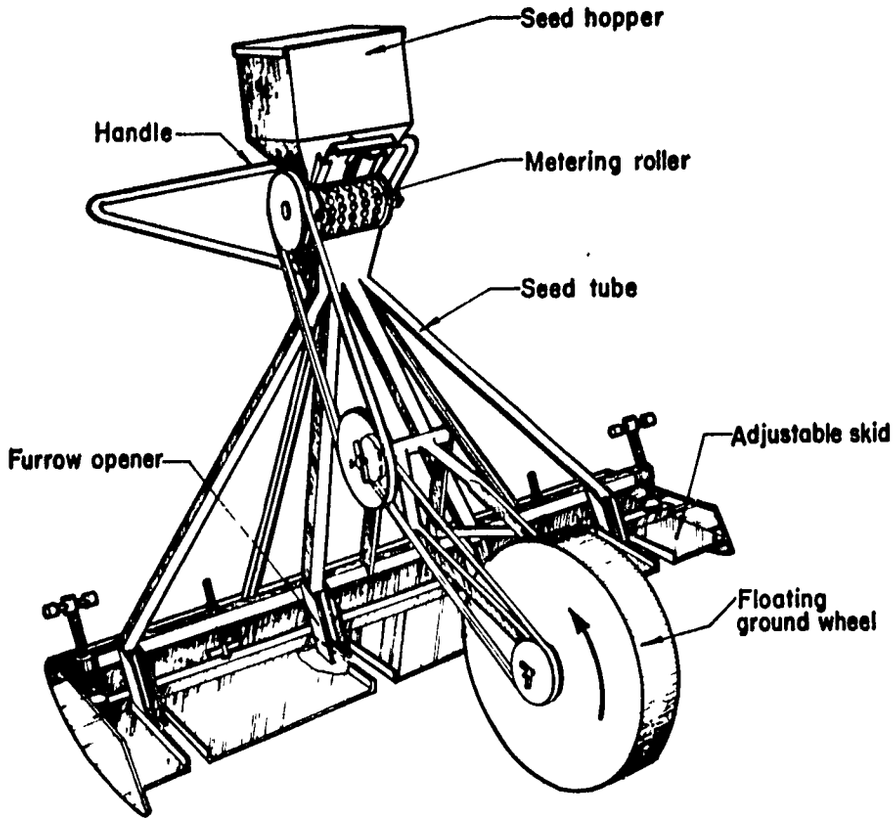

Fig. 25. Modified row seeder for seed placement studies.

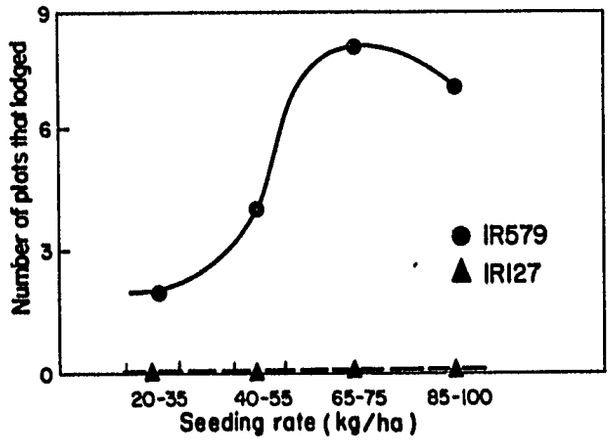

Fig. 26. Effect of seeding rate on lodging.

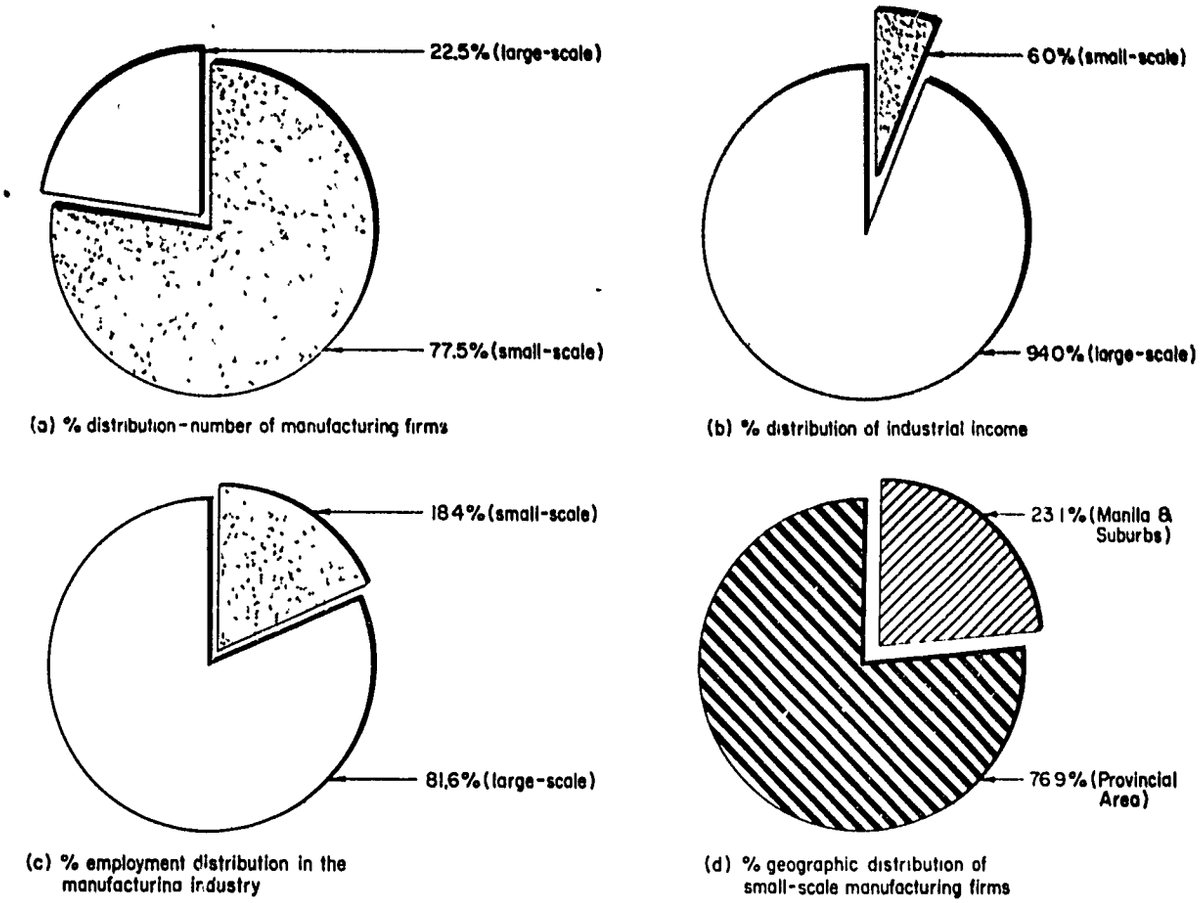

Fig. 27. Percent distribution of number, income, employment and location of manufacturing firms in the Philippines.

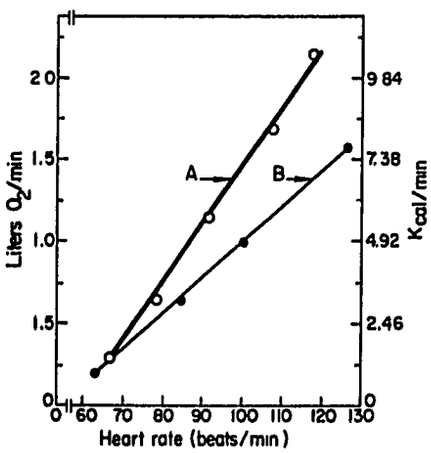

Fig. 28. Relationship between heart rate and oxygen uptake.

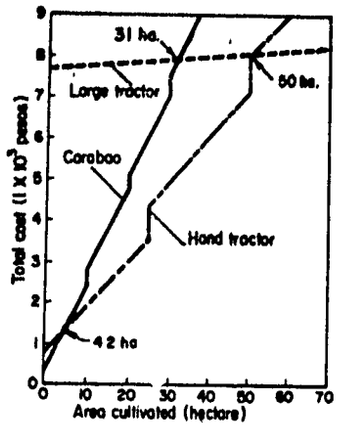

Fig. 29a. Total cost curves for alternative methods of land preparation.

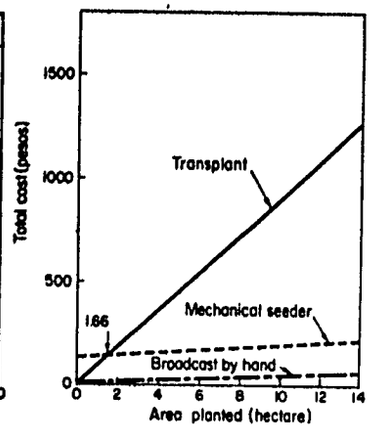

Fig. 29b. Total cost curves for alternative seeding techniques.

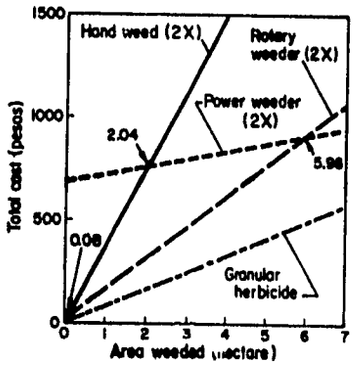

Fig. 29c. Total cost curves for alternative weeding techniques.

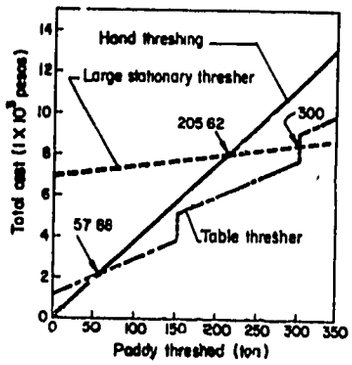

Fig. 29d. Total cost curves for alternative threshing techniques.

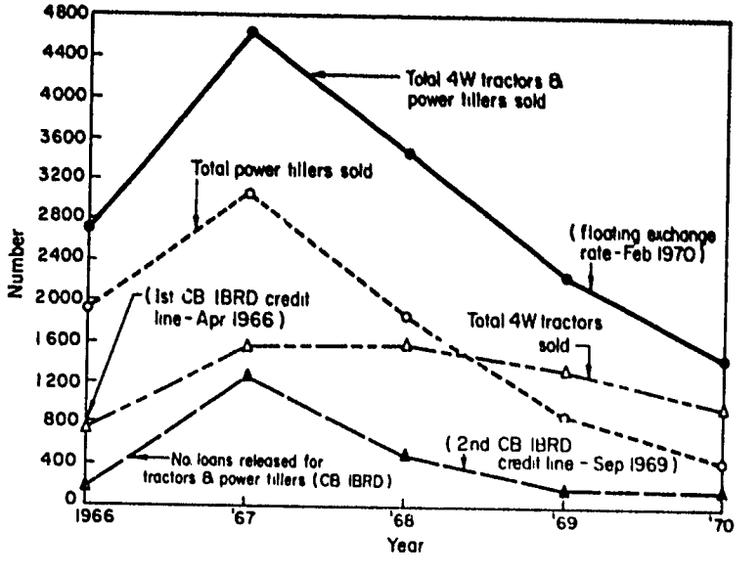

Fig. 30. Annual sales of power units and number of mechanization loans released under CB-IBRD credit program, 1966 to 1970.*

*Sales data from Agricultural Machinery Dealers Association, Manila, CB-IBRD Data from Department of Rural Banks, Central Bank of the Philippines.

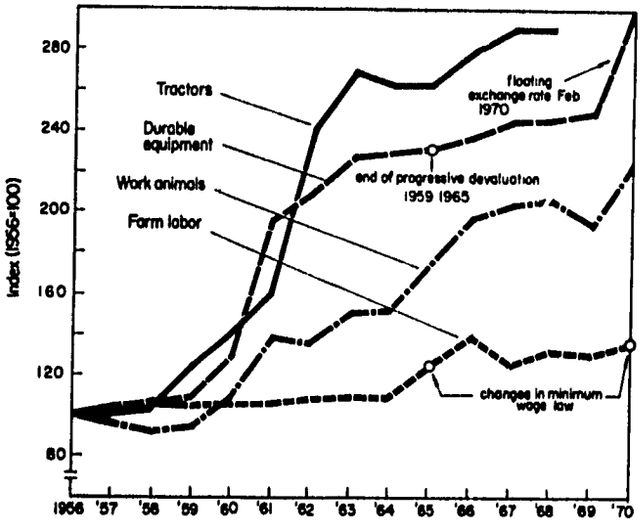

Fig. 31. Price indices of tractors durable equipment work animals and agricultural labor.*

*Based on data from Cristina M. Crisostomo, "Sources of output growth in Philippine agriculture 1948-1968," M.A. Thesis, University of the Philippines, 1971 (forthcoming).