AGENCY FOR INTERNATIONAL DEVELOPMENT
WASHINGTON, D. C. 20523

BIBLIOGRAPHIC INPUT SHEET

FOR AID USE ONLY
BATCH #28

1. SUBJECT CLASSIFICATION

A. PRIMARY: Serials — Y-AN20-0000-GG50

B. SECONDARY: Agriculture--Farm equipment--Tropics

2. TITLE AND SUBTITLE

Agricultural equipment development research for tropical rice cultivation; semi-annual progress report no.12,Jan.,1971 to June,1971

3. AUTHOR(S)

(101) IRRI

4. DOCUMENT DATE	5. NUMBER OF PAGES	6. ARC NUMBER
1971	57p.	ARC RP631.3.I61

7. REFERENCE ORGANIZATION NAME AND ADDRESS

IRRI

8. SUPPLEMENTARY NOTES *(Sponsoring Organization, Publishers, Availability)*

(Research summary)

9. ABSTRACT

10. CONTROL NUMBER

PN-RAB-583

11. PRICE OF DOCUMENT

12. DESCRIPTORS

Agricultural machinery
Intermediate technology
Rice

13. PROJECT NUMBER

14. CONTRACT NUMBER

CSD-2541 Res.

15. TYPE OF DOCUMENT

AID 590-1 (4-74)

57 p

A(8)

SEMIANNUAL PROGRESS REPORT NO. 12

JANUARY 1 TO JUNE 30, 1971

(For restricted circulation only)

CONTRACT NO. AID/csd-2541
Agricultural Equipment Development Research
for Tropical Rice Cultivation

by

AMIR U. KHAN
Development Engineer

FRED E. NICHOLS
Evaluation Engineer

BART DUFF
Agricultural Economist

Agricultural Engineering Department
The International Rice Research Institute
Los Baños, Laguna, Philippines

Copies of this report have been filed with:

Office of Agriculture & Fisheries
Bureau for Technical Assistance
USAID, Washington, D.C.
(100 copies)

The Director
USAID, Manila, Philippines
(3 copies)

TABLE OF CONTENTS

Title	Page
Introduction	1
Summary	1
Publications/Papers	2
Progress Report	4
Design and Development	5
Field Machinery Research	5
Individual-Row Metered Seeder	5
Multipurpose Seeder	5
Table Thresher	5
PTO Thresher	5
Multicrop Thresher	6
Stripper-Harvester	7
Differential Slip Tiller	8
Blade Lug Wheel	8
Dynamic Analysis of Rotary Tillage	10
Manual Submersible Sump Pump	11
Drying and Processing Research	11
Power-Driven Grain Cleaner	11
Manually Operated Grain Cleaner	12
Heated-Sand Drier	12
Rice Hull Furnace	13
Research on Rotary Screen Parameters	14
Test and Evaluation	15
Table Thresher	15
Power Grain Cleaner	16
Seeder	17
Power Weeder	17
General Test and Evaluation Activities	17
Economics of Mechanization	18
Table Thresher Cost Evaluation	18
Economic Evaluation of the Power Grain Cleaner	19
Devaluation and Use of Hand Tractors	20
Seeding-Weeding Interaction Trial	20
Manufacturing Case Study	
Work Plan	24
Personnel List	29
Tables	
Figures	

INTRODUCTION

The following materials constitute the twelfth in a series of semi-annual substantive reports describing activities carried out under IRRI/AID Contract csd-2541 entitled, "Agricultural Equipment Development Research for Tropical Rice Cultivation." Submission of the present document marks the sixth anniversary of this cooperative effort between The International Rice Research Institute and the U. S. Agency for International Development.

An emerging concern with the problems of unemployment and underemployment caused by high labor force growth rates has brought into sharp focus conflicting viewpoints concerning the role of agricultural mechanization in the developing countries. The recent introduction of the high-yielding varieties coupled with substantial investments in fertilizers has increased yields markedly in several countries of Asia. In the absence of labor-saving technologies, the new varieties have also tended to increase overall labor inputs. However, for certain tasks in the rice production process, increased labor requirements can represent a real and costly constraint to expanded or intensified agricultural production.

A major objective of agricultural mechanization research at IRRI is to create, through selective design and development, machines which will enhance labor productivity in those tasks which represent production bottlenecks without concomitantly exacerbating unemployment problems through large-scale labor displacement. With 60 to 80 percent of Asia's farms falling in the 2 to 10-hectare size category, the type and cost of such machines developed must be strongly conditioned by consideration of the existing resource base (including labor) and its opportunity costs. An additional objective has been to embody in the production of each machine the maximum quantity of local resources, particularly indigenous labor. Another objective has been to increase the output efficiency of currently available technology. An example of this approach is found in work underway to improve equipment for the small-scale rice milling industry. The development of a small-scale rice mill capable of achieving outputs comparable to current technologies but with significant increases in recovery efficiency would represent a major savings both in the quantity and quality of the output and a reduction in per unit costs.

Considerably more emphasis is being placed on the role of manufacturing extension as more designs become available for commercial production. An international dimension has also been added through a subcontract program to undertake extensive evaluation of new designs with local agencies in several countries of Southeast Asia.

SUMMARY OF ACTIVITIES

Production and marketing of a number of machines emanating from contract activities have made substantial progress during the past six months. The rotary power weeder, which is now being produced by two manufacturers in Japan, was sold in substantial quantities in that country during the past year. The six- and eight-row pregerminated paddy seeders which are being produced by three firms in the Philippines have generated considerable

interest among farmers in the rice-growing areas to which it is suitable. After a period during which many of the production problems related to manufacture of the table thresher were resolved, the machine is now in commercial production in the Philippines. The power grain cleaner has only recently reached the production stage and more attention will be given to an assessment of its market potential during the current reporting period. Worldwide interest in the program continues to grow and the department receives numerous requests each week for information related to machine designs and technical problems.

Staffing changes

Mr. Emilio O. Casem, assistant design engineer, resigned from the project effective June 10, 1971 after serving nine years at IRRI. He has accepted a new position in the United States. The evaluation and testing group added an assistant test engineer and a research aide to carry out the expanded activities of this section.

Travel

The development engineer attended a seminar in Senegal, West Africa from January 25th to the 29th to present a paper and participate in discussions pertaining to the mechanization of West African agriculture. He also traveled to Indonesia at the invitation of the Indonesian Government to evaluate the potential for mechanization in that country. The evaluation and test engineer spent three weeks in Indonesia, Thailand, and South Vietnam familiarizing himself with agricultural engineering activities and developing contacts with possible test and evaluation cooperators in those countries. The agricultural economist made a ten-day visit to Taiwan in January 1971 to negotiate a subcontract agreement with the Joint Commission for Rural Reconstruction to test IRRI-developed machinery under Taiwanese conditions.

Publications/papers

Members of the contract staff presented the following papers during the reporting period:

International Rice Research Conference, IRRI (April 19-21, 1971):

A. U. Khan -- Harvesting and threshing of paddy
B. Duff -- Economics of mechanizing large versus small farms in West Pakistan
F. Nichols -- Agricultural machinery development at IRRI
V. E. A. Wikramanayake -- Direct seeding and transplanting of rice

Seminar on the Mechanization of Agriculture in West Africa, Le Centre des Recherches Agronomiques, Bambey, Senegal (January 25-29, 1971):

A. U. Khan -- Equipment for mechanized tropical agriculture

Agricultural Mechanization in Southeast Asia, Farm Machinery Industrial Research Corporation, Tokyo, Japan (Spring 1971):

A. U. Khan -- Machinery development for tropical agriculture
V. E. A. Wikramanayake -- Ceylon - Mechanization of agriculture, the present position and future development

Special award

Mr. Nestor Navasero, research assistant in engineering, received the First Place Presidential Award for the Outstanding Utility Invention in the Philippine Inventors Commission annual contest during 1971. This award was presented in recognition of work which Mr. Navasero conducted on the development of the six- and the eight-row pregerminated paddy seeders.

Subcontract activities

During the reporting period, test and evaluation subcontracts were negotiated between The International Rice Research Institute and agencies located in India and Taiwan. Plans are presently in progress to set up similar programs in Thailand, West Pakistan, Indonesia, South Vietnam, and Ceylon.

The purpose of these subcontracts is to test and evaluate the technical and economic viability of IRRI designs under local conditions encountered in countries throughout the tropical rice-growing areas of Asia.

PROGRESS REPORT NO. 12
JANUARY 1 TO JUNE 30, 1971

The following personnel were responsible for these projects:

Design and Development

Field Machinery Research:

1. Individual-row metered seeder	A.U. Khan, E. del Rosario
2. Multipurpose seeder	N. Navasero
3. Table thresher	A. U. Khan
4. PTO thresher	A. U. Khan
5. Multicrop thresher	A. U. Khan
6. Stripper harvester	A. U. Khan
7. Differential slip tiller	P. Cabanos
8. Rotary tillage	M. Koike
9. Blade lug wheel	P. Cabanos
10. Manual submersible diaphragm pump	N. Navasero

Drying and Processing Research:

11. Power-driven grain cleaner	A. U. Khan
12. Manually operated grain cleaner	A.U. Khan, E. del Rosario
13. Heated sand drier	A. U. Khan, A. Amilhussin
14. Rice hull furnace	A. Manalo
15. Research on rotary screens	V. Uichanco

Test and Evaluation

16. Table thresher	F. Nichols, B. Ramos
17. Power grain cleaner	F. Nichols, C. Padolina
18. Power weeder	F. Nichols

Economics of Mechanization

19. Table thresher cost evaluation	D. Duff, N. Orcino
20. Power grain cleaner cost evaluation	B. Duff, N. Orcino
21. Devaluation and use of hand tractors	N. Orcino, B. Duff
22. Seeding-weeding interaction trials	N. Orcino, B. Duff
23. Manufacturing case studies	B. Duff

DESIGN AND DEVELOPMENT

Field Machinery

Individual-Row Metered Seeder

Farmers' response to the six- and eight-row seeders for pregerminated paddy has been encouraging in the Philippines (see reports Nos. 9, 10 & 11). The three companies manufacturing these machines have sold approximately 300 units on the local market. These seeders have a combined seed metering mechanism and hopper for all rows. A second seeder project was initiated to develop a machine that achieves improved seed placement by use of independent hoppers and metering devices for each row. Various metering devices were tested in the laboratory before fabrication of the first prototype seeder was undertaken.

Seed bridging in the hopper is a serious problem when metering high moisture pregerminated seed. It was found that a minimum 45 degree slope in the seed hopper box is necessary to minimize bridging and ensure a constant flow of pregerminated seed to the metering roller. The first prototype six-row machine was completed (Fig. 1) and initial tests conducted. The machine uses a single transport wheel which drives the metering rollers directly through the axle. During initial tests, the machine covered one hectare in 5.33 hours at a seeding rate of 33 kg per hectare. A local manufacturer is now fabricating five units for field testing in the Philippines.

Upland Seeder Test

Three different types of seeders were tested to compare their performance with that of broadcast upland rice: (1) a multi-purpose seeder (Fig. 2) with furrow openers adapted for upland planting (description contained in report No. 11); (2) a simple seeder using only a wooden frame with tin cans for seed hoppers and wires to agitate the seeds (Fig. 3) which was developed by the department upon request from Africa; and (3) a commercial multipurpose seeder known as the Planet Junior (Fig. 4).

An interaction experiment using three seeding rates and three depths of planting was initiated. Seedling count after emergence, uniformity of seedling distribution along the rows, tiller count at maximum tillering and yield data are being recorded and will be used as the basis for evaluating relative performance characteristics. An analysis of the data from this experiment will be presented in the next semi-annual report.

Table Thresher

A description of the test and manufacturing extension activities for the table thresher is included in the test and evaluation section of this report. Development activities were restricted to an evaluation of alternative wheel attachments to facilitate machine transport. A two-wheel arrangement with adjustable mounting permitting 90 degree rotation of each

wheel for either in-line or parallel wheel travel is undergoing tests. Wheels can be conveniently raised or lowered. A common handle was designed for installation at two different locations on the thresher (Fig. 5) to permit use with both the in-line wheel arrangement for transporting on narrow levees or the parallel wheel arrangement for road transport. The handle can be used for manual transport of the machine or for hitching to small tractors.

PTO Thresher

During the preceding six months, efforts were concentrated on maximizing the degree of grain separation obtained at the cylinder concave. Three types of concaves were tested: Type I, consisting of perforated sheet from the feed opening to the bottom of the concave with the remainder composed of 1/4 in. round bars with 1/4 in. spacing between bars; Type II, consisting entirely of 1/4 in. round bars with 1/4 in. spacing; and Type III, consisting of 1/4 in. round bars with 3/8 in. spacing from the feed opening to the bottom of the concave with the remainder containing 1/4 in. spacing.

Test results indicate that 80.6% to 83.6% of the total grain entering the machine can be separated using the Type I concave and up to 93.4% separation is possible with the Type III. Relatively more straw tends to pass through the Type III concave as a result of the wider spacing between concave bars. A decision to discard the Type I and Type II design was made because of poor separation performance.

The number and location of the concave spikes also has a significant effect on both grain-straw separation and the condition of the straw after threshing. Hence, alternative numbers and arrangements of spikes, both on the cylinder and the concave, were tested. The results of these trials indicated that the optimum number of spikes is 42 on the cylinder and 12 on the concave. Two concave configurations which produced satisfactory results are illustrated in Figure 6. Up to 93% grain separation at the cylinder was possible with both of these configurations. During continuous operation, cross bars were attached to the concave to reduce the amount of straw passing through the concave (Fig. 6). The final design, with all spaces between bars widened to 3/8 in. to facilitate fabrication, was found to perform satisfactorily.

Tests and modifications are presently being conducted on the rotary separator to improve its performance efficiency in removing the residual 7 to 15 percent threshed grain which remains incorporated in the straw after passing through the cylinder. By the end of the year the three major components of the thresher (threshing cylinder, rotary separator, and straw thrower) should be near an optimal configuration.

Multicrop Thresher

The simple foot-operated wire loop thresher has gained wide acceptance in Taiwan. Rapid industrial growth and an emerging paucity of labor

have, however, made the productivity of this machine inadequate to cope with the tremendous increases in rice production and uneconomical because of rising wage rates. From studies and conferences in Taiwan, it was felt that the introduction of a low cost, lightweight, thresher could contribute significantly to increasing labor productivity and agricultural output.

The power thresher conceived by the department is a throw-in type machine (Fig. 7) composed of separate threshing and cleaning elements. The threshing component is a spike tooth cylinder with a concave. The grain-straw separating and cleaning section is similar to the IRRI power grain cleaner described in reports Nos. 10 & 11. The threshing cylinder axis is at right angles to the rotary separator. The separator-cleaner is composed of a perforated cylinder mounted concentrically inside a larger rotary drum. A blower is installed under the threshing section and a short duct vents air into the anular space between the revolving cylinders where tumbling of the grain is most vigorous. A major portion of the threshed grain passes directly through the concave openings while the remainder is discharged into the inner perforated drum of the rotary cleaner. Louvers arranged helically on the inner cylinder convey the straw and larger-than-grain impurities axially through the machine while grain passes through the perforations. The grain is repeatedly tumbled in the air stream by pockets attached to the inner surface of the outer drum. Simultaneously, guide vanes convey the grain against the air stream into a grain elevator.

Work on fabricating a prototype machine has been initiated.

Stripper Harvester

The experimental stripper harvester described in reports Nos. 9, 10 and 11 exhibited high field losses. Because it is difficult to observe and pinpoint the causes of these losses during field operation, an experimental laboratory test model, similar to the original harvester was fabricated (Fig. 8) to observe the trajectories and movement of grain during the harvesting operation. Still photographs with strobe lights and high speed motion pictures will be taken to study the path of the grain as it is impacted by the wire loops on the threshing belt. The experimental laboratory model has been designed with infinitely variable speed hydrostatic drives on both the threshing belt and the plant-gathering and deflecting mechanism. Rice plants are clamped to a movable trolley which is designed to simulate the movement of the harvester in the field. The trolley was originally driven manually, but initial tests indicated difficulty in maintaining a uniform travel speed. Work is now underway to operate the trolley with an electric motor to ensure a constant travel speed.

The threshing belt and material gathering mechanism on the experimental unit are designed so that their relative angles can be conveniently changed with respect to the horizontal axis. It is hypothesized that the angle of attack of the threshing belt with input materials has a significant effect on grain losses occurring at the point of initial contact. A belt with an angle closer to the horizontal axis would perhaps reduce these losses. The circular shield in front of the threshing belt also seems to have

an effect on the amount of grain which is scattered ahead of the machine. Different types and sizes of shields will be analyzed on the experimental unit to establish an optimum shield configuration. Work on the field harvester has been temporarily suspended pending completion of tests with the experimental laboratory unit.

Differential Slip Tiller

A description of the differential wheel slip tillage concept and an experimental machine constructed to test the concept under soft, wetland conditions is found in reports Nos. 10 & 11. The major problem encountered with the initial experimental machine was the difficulty in maintaining a constant speed differential between the two independently powered axles. This was caused by an overdriving tendency created by the more rapidly rotating set of cage wheels.

To eliminate the overdriving problem, a machine incorporating a fixed differential speed ratio between the two sets of cage wheels was designed. To test such a configuration, an attachment was fabricated for a standard 7 hp walking tractor equipped with steering clutches. This attachment consisted of two completely enclosed chain drive assemblies which independently drive a second set of axles at a slightly higher speed. To turn the machine, the wheels on the right or the left side can be disengaged by use of the steering clutches. The front and rear pairs of cage wheels are identical in size and design. The drive ratio between the front and the rear axles is 1:1.875.

The machine was tested in a very soft paddy field and it demonstrated improved mobility. The four-wheel drive arrangement allows the machine to cross levees as high as the wheel diameter without damage to either machine or embankment. The tractor, complete with the extra set of cage wheels and the two chain drive units, weighs 315 kg. The machine was operated in a field along with a conventional walking tiller weighing 130 kg which was equipped with a comb harrow. The differential slip tiller demonstrated superior mobility when compared to the lighter machine. Even when the small walking machine completely bogged down the experimental machine experienced no mobility problem. Increasing the speed ratio between the front and rear set of cage wheels may further improve tilling performance. Work is underway to install new sprockets to increase the differential drive ratio to 1:2.5.

Blade Lug Wheel

The use of large tractors for wetland paddy cultivation has been somewhat limited due to mobility problems. Rotary tillers, utilized in conjunction with large tractors, however have reduced traction problems and, their use often aids in tractor forward propulsion. A variety of traction aids have been used on tractor tires to improve mobility in wetland fields. Different fixed lug cage wheels have been developed in many Asian countries. The major drawback of the fixed lug wheel is that the tractor has no reserve traction capacity to pull itself out of a bogged condition.

A device that seems to offer a solution to this problem is the extendible lug wheel. A number of extendible wheels have been developed in Japan and in UK. These wheels, however, are quite expensive for the tropical farmers. A relatively simple extendible lug wheel which has gained popularity in Malaysia, is composed of five or six 4" x 4" wooden columns mounted radially on wheel frames that are attached to the tractor rear wheel disks. The lugs can be set to provide varying degrees of traction assistance by just retracting or extending the lugs. In critical field conditions, the wooden lugs are extended radially beyond the tire periphery to reach the hardpan. If the tractor is bogged, one or two lugs are extended fully and this permits the tractor to move out on its own power.

The problems inherent in these wooden strake wheels are:(1) when the strakes are extended beyond the wheel periphery for improved traction, a rocking motion occurs; (2) when fully extended, the columns tend to deepen the hardpan layer; and (3) some difficulty is encountered in extending the columns due to the expansion of the wood when wet. To minimize these problems, an extendible steel blade lug wheel (Fig. 9) was designed and tested by the department. The blades can be set in five positions relative to the tractor tire periphery: (a) - 2 in.; (b) - 0.5 in.; (c) + 1 in.; (d) + 2.5 in.; (e) + 4 in.; the positive sign indicates positions of the blade lug tip beyond the tractor tire periphery (Fig. 10). A sharp blade tip was used to facilitate soil penetration without developing excessive vertical reaction. The steel blades were made laterally wider than the 4" wooden strake used in Malaysia. This was done to achieve more traction without penetrating too deeply into the hardpan. The mounting frame was designed such that either five or six blades can be mounted with equal spacing to permit evaluation of the optimum number of blades required for satisfactory performance. Each blade has an included angle of 25 degrees on one side, the other side being along the radial line. Interchanging the wheel frames permits two possible angles of the "leading face".

A 55-hp tractor weighing 2,240 kg (1567 kg at the rear axle) was used in the test. It was equipped with 13.6 x 12-38 rear tires with a rolling diameter of 1.525 m on concrete. Wheel axle torque and tension load transducers were attached to record wheel torque and drawbar pull. A travel distance indicator was also used to obtain tractor speed and wheel slip.

Figure 11 indicates the drawbar pull at each blade setting. Traction did not improve significantly at the -2 in. setting. The position is, however, convenient for traveling on hard ground for operator comfort and to prevent damage to the road. The minus 0.5 in. setting seems to be critical as the effect of the blade on traction is not so pronounced. At +1 in. setting and under no load, the tractor was mobile under most field conditions in the test. Comparison of the performance between the number of blades was made only in the +2.5 in. and +4 in. settings where the blades were significantly effective. Using six blades, maximum drawbar pull occurred at about 50 percent wheel slip whereas with five blades, a maximum value was obtained at 85 percent wheel slip. Wheel slippage tended to increase at a faster rate with increased loading using five blades than six

blades. The horsepower and traction efficiency are listed in Table 3.

A previous study of the rolling resistance of the same tractor (report No. 10) demonstrated that the rolling resistance varies inversely with the area under the penetrometer curve between 0 to 9 in. depth. The penetrometer curves for each test are shown in Fig. 12 and the corresponding area under the curves are listed in Table 3. Figure 13 shows some drawbar pull and torque readings in the +2.5 in. position (penetrometer characteristics in this position were similar).

In the maximum blade extension both the 5 and 6 blade arrangements performed well in deep wetland fields. No tractor bogging was encountered even when rear wheel sinkage was up to 0.5 m. It seems that extending the blades beyond 4 in. over the tire periphery will have no appreciable advantage for mobility and will result in relatively high torque which may increase the tendency for the tractor to overturn.

For emergency purposes, as in bogging, intermediate positions between - 2 and + 4 in. would not be necessary and 5 blades would suffice. On the other hand, if the wheels are for traction efficiency and for maintenance of uniform speeds, as in rotary tilling, six blades with the following positions are recommended: -2, +1, +2.5, and +4 in. There seems to be no difference in performance between the radial and the 25 degree leading face of the blade (Fig. 14)

Dynamic Analysis of Rotary Tillage

Rotary tillage as a method of primary and secondary seedbed preparation in rice production has assumed much importance in recent years. Because many problems relating to the strength of materials, ergonomics, and practical design parameters require further clarification, a study was conducted in which the dynamics of rotary tillage were analyzed. Three factors were considered: (1) power distribution during tractor-tilling operation; (2) PTO torque frequency distribution; and (3) the power spectral density (PSD) of PTO torque fluctuations.

Results

Power distribution - Table 1, which shows performance under upland conditions, indicates that the required rear axle horsepower does not exceed 0.05 percent of the required PTO hp, the latter increasing with an increase in the cutting pitch of the tiller tines. Wheel slippage decreased as the tractor transmission gear ratio were increased and in the 4th gear it was negative. Visual observation indicated good tillage performance at all speeds except in the 4th gear range.

Under lowland conditions (Table 2), the difference between the power requirements of the rear axle and the tiller decreased with an increase in travel speed. Treatment #7 of Table 2 shows that the rear axle requires more power than the tiller. A possible explanation for this could be the considerably reduced pushing reaction from the softer soil thereby

reducing PTO torque and consequently increasing rear axle torque.

PTO torque frequency distribution. - Variations in PTO torque were plotted as frequency distributions of the crest and trough values of torque readings taken from a strain gauge recorder. Figures 14 and 15 show these distributions for upland and lowland conditions, respectively.

Under upland conditions the following points are apparent: (1) Every curve is a near-normal distribution; the range being 3.4 times the modal value in 1st and 2nd gears and 2.8 times in 3rd and 4th gears; (2) As travel speed increases, the curve shifts to the right, showing an increase in power required.

Under lowland conditions (Fig. 15), note the following points: (1) The absolute modal values of the PTO shaft torque are lower than the corresponding values under upland conditions. (In first gear it is half for both crest and trough values, and in second gear is half for trough values, although identical with the crest when compared with upland conditions. Decreases are from 1/9th to 1/11th the upland values in third and fourth gears); (2) Negative torque occurs in the two higher speed ranges, while at lower speeds the behavior is similar to upland conditions.

Power spectral density (PSD). - The load characteristics of a single tine will depend upon the tine cutting area and cutting duration. Assuming a constant speed of rotation of the tine shaft, the combined effect of a number of tines, arranged as in Fig. 16, can be estimated (Fig. 17). The analytical procedure was designed to estimate the predominant components in the random wave per revolution of the tine shaft. It was evident that these complex waves obey the periodic function and hence, a spectrum distribution of the frequency domain would be given in the form of a harmonic analysis using the Fourier series. Figure 18 shows three frequencies of pronounced amplitude. The technique provides a means of detecting isolated high degree waves, which is not possible with frequency distributions alone.

Manual Submersible Sump Pump

A low head, high capacity manually operated portable pump is being developed. It is felt that such a device would find wide application with the small farmers in Asia. The concept envisions a simple, double-action pump composed of two independent diaphragms mounted on a steel frame (Fig. 19). The first prototype unit has been fabricated and results seem quite encouraging. Performance tests and durability studies are planned. Further development work will continue based on the test results.

Drying and Processing

Power-Driven Grain Cleaner

Test data and the manufacturing extension activities for this machine are included in the test section of this report. Excessive wear of

the auger was observed after extended use of the machine. Recommendations were made to the manufacturers to increase the auger diameter from 3 to 4 inches and correspondingly reduce auger speed to maintain the original designed feed rate. This was done to improve the auger life and trash handling capacity. The initial machines received from the manufacturers indicated that the auger was feeding more grain than the designed capacity. A new set of pulleys were used which reduced the excessive grain flow. Some modifications were made to alter the angle of attack and height of the spiral louvers in the outer drum to achieve greater air-grain exposure and to reduce carry-over losses. Several of these machines are currently being shipped abroad for evaluation and testing.

Manually Operated Grain Cleaner

The prototype manual grain cleaner described in report No. 11 has been fabricated (Fig. 20). The original concept envisioned a scalper type externally fed rotary screen. During initial tests, difficulties were encountered with the grain metering mechanism and hopper loading. A decision was made to modify the grain feeding and screening mechanisms. A series of pockets were installed on the outer periphery of the winnowing cylinder to pick dirty grain from a trough and drop it onto a circular screen mounted concentrically inside the winnowing cylinder. Using this system, hopper height was reduced to 48 inches which facilitates the dumping of grain into the hopper. Considerable manual effort was required to operate the prototype unit. Attempts were made to minimize power requirements. One reason for high power requirement was the friction created by the rubber flaps in the grain elevator trough. A new elevator using grain pockets was developed which eliminated the rubber flaps. The sleeve bearings used on the fan was changed to ball bearings. The machine is now suitable for one-man operation. Additionally, provisions have been made to allow installation of an electric motor without any modifications in the machine.

The initial arrangement of the tumbling louvers resulted in intermittent dropping of large grain masses throughout the length of the winnowing cylinder. Different types of grain pockets and spiral flight louvers are being tested in an attempt to obtain a uniform cascading effect and to improve the counterflow movement of the grain against the air stream. When satisfactory performance is obtained, a second production machine will be fabricated.

Heated-Sand Drier

The working principle of the heated-sand drier is described in report No. 9. The initial prototype machine encountered problems with the pocket type grain feeding mechanism. An auger mechanism was installed to obtain positive, uniform metering of wet grain into the machine. Because soaked grain does not flow smoothly, an agitator was designed in conjunction with the auger to maintain a constant flow from the hopper. Also, the initial rotary screen did not remove all the sand from the dried grain. The length of the screen was subsequently increased by 6 in., resulting in

significantly improved grain-sand separation.

Tests with the experimental drier indicated that during continuous operation the in-going sand temperature was stabilized at 250°F. This low sand temperature was partially due to the small size of the sand pan. The pan was subsequently increased in length and depth to enlarge its sand-holding capacity. This resulted in an increase in the stabilized sand temperature of 310°F. Four flat ribs were also welded to the underside of the pan to improve the heat transfer and conductive capacity of the pan. The LPG burners which were originally equipped with small burner holes were also modified to increase their heating capacity. The new burner elements have slots instead of the holes. The pitch of the internal auger in the drying chamber was also modified to obtain a 10 to 20 seconds of grain-sand exposure.

Tests with the modified machine indicate that it will remove 12 percentage points of moisture from paddy in about 15 seconds when the grain is introduced at an initial moisture content of 32 percent d.b. The thermal efficiency of the drier is about 35 percent based on 1400 BTU/lb H_2O of paddy.

The temperature of the dried paddy coming out of the machine was 200°F. The hot grain was immediately aerated; dried in a conventional flat bed drier; and stored in jute sacks. Tests indicate that the moisture content of the hot grain can be further reduced to 16 percent (d.b.) by (1) 30 minutes aeration immediately following passage through the drier, (2) 10 minutes drying using air at 110°F or, (3) storing in a bag for two weeks. No rise in grain temperature was observed on heated-sand dried paddy stored in bags which indicates that the heated-sand process stops the seed respiration that generally cause temperature rise and grain spoilage.

The drier is still in an experimental stage of development and further modifications to improve its efficiency are underway. Increasing the rate of heat transfer between the flame and the sand pan and minimizing the overall heat losses are the two basic objectives of the improvements which are now being made. The machine is being insulated to minimize heat loss which, together with other improvements, should result in a higher stabilized heated-sand temperature of about 400°F. Attempts may also be made to utilize the exhaust heat for preheating the incoming grain prior to its entry into the drying chamber.

Rice Hull Furnace

Reports Nos. 10 & 11 describe the objectives and design of the rice hull furnace project. The furnace (Fig. 21) consists of two 55 gal oil drums connected by an air duct. Rice hulls burn on a sloping grate in the first drum while the second drum serves as an ash trap. A centrifugal blower delivers heated air from the second drum to the plenum chamber of a flat bed, batch type drier. The present furnace and blower delivers 68 cu m/min of drying air at 43 ± 3°C. The present direct-fired design eliminates the

heat exchangers, resulting in increased thermal efficiency. An undesirable feature, however, is the inclusion of combustion gases in the air passing into the drier.

Drying experiments were conducted with the rice hull furnace to determine: (1) the quantity of rice hull required to dry a given weight of paddy; and (2) whether inclusion of combustion gases louvers the milling quality of the [redacted] rice.

The moisture content of 1144 kg of paddy, placed 0.3 m deep on a flat bed drier, was reduced from 19 percent (w.b.) to 13 percent in 3 hours of continuous drying. The heated air temperature was 43 ± 3°C and the air flow rate was 35 cu m/c m of grain.

The furnace consumed of 6 kg of rice hull per hour to heat 68 cu m/min of air from 29°F and 85 percent RH to 43 ± 3°C. About 0.7 kg of hull was required to dry 44 kg of paddy from 19 percent to 13 percent wet basis. On the basis of this test, the computed heating value of rice hull is 3,000 kg cal/kg.

The thermal load of the furnace space was 200,000 kg cal/cu m/hr which is the amount of heat generated per hour per unit volume of furnace space. The fire grate thermal load was 145,000 kg cal/m^2hr which is the amount of heat generated per unit grate area per hour.

The color and odor of the milled rice did not change appreciably with the passage of combustion gases through the drier. The head rice yield as measured at the top, middle and bottom of the grain bed was the same as the shade-dried control.

Work has commenced on the development and testing of a cascading type grate for the fire box in the furnace. Conceivably, this will increase the thermal capacity without increasing the size or cost of the unit.

Research on Rotary Screen Parameters

Semi-annual report No. 11 contains a brief description of a study undertaken to determine the basic technical characteristics of rotary screens. The effects of the following parameters on output and purity were studied: (1) diameter of the screen drum, (2) screen perforation size, (3) length of exposed screen, (4) angle of inclination of the drum, (5) rotational speed of the drum, (6) density of input materials, and (7) amount of grain and straw input.

From the experiment, it was determined that 9.52 mm (3/8 in.) screen perforations were optimal for the IR22 variety of paddy used in the test. Optimal perforation size is affected by the length of the individual rice grain. Output increased with an increase in drum length 20 to 80 cm. Increasing the length beyond 80 cm did not result in any significant increase in output. Increasing the rotational speed from 12 to 22 revolutions

per minute decreased output for screens with perforations smaller than 3/8 in. while it had little effect on those with larger openings. The optimum angle of inclination of the drum for maximum output and purity was 5°. Increasing the angle beyond 5° tends to reduce output. The effect of drum diameter and speed can be seen in Table 4 and Fig. 22. Within a range of 16 to 32 revolutions per minute, there is no significant effect on output between the 2, 2-1/4 and 2-1/2 foot diameter drums. There is however a great reduction in output when the 1-3/4 foot drum is used. A plot of screen peripheral velocity and grain output for the 3/8" screen perforation (Fig. 22) indicate that the 1-3/4 foot diameter is too small to obtain maximum performance. The three larger diameters 2, 2-1/4 and 2-1/2 feet, all indicate an optimum performance between the range of 140 to 220 ft/m screen peripheral velocity.

Taking derivations of the regression equations shown in Table 5, the optimum values for rotational speed can be calculated. These are shown in Table 6.

Information resulting from this experiment will be used in the determination of optimal design specifications for those machines under development which use rotary screening mechanisms. Complete details relating to the experiment are available upon request from the department.

Test and Evaluation

Table Thresher

The initial test of the table thresher consisted of a no-load endurance test in the laboratory. The machine was powered by an electric motor and maintenance and lubrication checks were performed after every four hours of operation. The machine accumulated 120 hours of operation in two weeks with no appreciable wear or other malfunctions. One thresher was selected for all field tests to determine maintenance and wear problems. These tests were conducted on the IRRI farm and in the surrounding community with the cooperation of local farmers. Threshing performance has been quite satisfactory under the conditions encountered. Machine output has varied from a low of 175 kg per hour under adverse conditions, to 400 kg per hour under ideal conditions. It was determined that the mechanisms for attaching the drive pulley to the second vertical drive shaft was inadequate. The top pulley became loose after about 10 hours of operation and had to be continually checked and tightened. After 82 hours of operation the sleeve bearings in the cleaning screen assembly and the countershafts were worn to such a degree that they were replaced and all other bearings checked. After an additional 7.5 hours of operation, a high rate of wear on the bearings just replaced was noted. This rapid rate of wear occurred despite consistent and timely lubrication at all points.

An analysis of the design indicated that some modification was necessary in the type of bearings utilized and the configuration of the drive system. A new design was conceived that utilized sealed bearings throughout and eliminated one countershaft, three pulleys and one drive

belt. The improved system reduces lubrication requirements and allows simplified operation. Continued tests with the modified thresher indicate that performance is satisfactory and that machine operation is smoother and requires less maintenance than the earlier design.

With a total of 110 hours of operation there is no appreciable wear on the threshing blades or other threshing components. The rubber flaps utilized as grain sweeps exhibit signs of wear but remain functional. Further testing will be required to fully determine the life of the grain sweeps or whether they require reinforcement. Output quality is not as high as desired and additional tests must be conducted to determine a means of improving output cleanliness.

All testing has been conducted in close cooperation with the manufacturers. Minor revisions and results of all tests have been immediately forwarded to the manufacturers for their information and incorporation into their production units. Oberly & Company has developed some production tooling for the manufacture of the table thresher and now has the capacity to build 15 machines per month. They have also made minor alterations in our design to fit their production facilities. Production and market planning have proceeded at an excellent pace and considerable optimism is expressed for the future of this machine.

Power Grain Cleaner

The initial production prototype from one manufacturer was received during this report period and numerous minor manufacturing errors were discovered and corrected. Other design changes have been incorporated into the unit as they were evolved through the testing program. Safety shields have been added and revisions incorporated to facilitate assembly and disassembly of the unit. Limited performance tests have been conducted and performance standards are being established through further testing. It appears that two rather than three input settings on the feed auger may be sufficient and that output quality can be best controlled by regulating the cleaning air velocity. Due to the lack of wheat, grain sorghum, soy beans and other materials, it has not been possible to establish the machine's performance with those particular crops. Performance tests to date indicate excellent cleaning quality at 1-1/2, 2.1 and 2.6 tons per hour output. Final performance tests are being conducted and the machine will be released for full production within thirty days.

Local manufacturers have had some difficulty in obtaining the desired perforated screen material required for this machine. At present no production tooling has been planned and production costs are not fully established.

The machine has been demonstrated with favorable response at five different field days in Central and Northern Luzon. Machine capacity is above the average small farmer's requirements, but many mill operators and large farmers have expressed a need for this type of machine. However, the

full market potential for the power grain cleaner needs further investigation by the manufacturers and through continued field extension activities.

Seeder

The pregerminated paddy seeder has been utilized in numerous field demonstrations and for all seeding of engineering field plots at the Institute. It has been tested with weights attached to the seed hopper to determine the existence of structural defects and projected effective life of the unit. A single unit, used to seed approximately 20 hectares at the Institute, has shown no structural defects and field performance continues to be excellent.

Power Weeder

Two Japanese-built power weeders were received and performance tests are being conducted. The unit is lighter and easier to handle than the original IRRI design (see reports Nos. 6 and 10) and field operation has been satisfactory. When the unit is operated as a three-row weeder, the two small rotors mounted at the center of the machine leave a relatively wide unweeded strip under the drive housing. This unweeded area is not fully weeded by the trailing skid or the man operating the unit. The center rotors should be altered sufficiently to provide more adequate weeding coverage to the area lying directly beneath the worm gear reduction housing. Suggestions for corrections have been forwarded to the manufacturers. Because rotor fingers have a high wear rate, testing will continue to determine rotor life.

General Test and Evaluation Activities

Five field demonstrations were conducted in the provinces of La Union, Nueva Ecija, Camarines Sur, Isabela and Laguna. These demonstrations were conducted in cooperation with the manufacturers to assess farmer acceptance of the units and machine performance at various locations throughout the Philippines. Each field trial included the demonstration of the seeder, power weeder, table thresher, and power grain cleaner. Farmer interest has been high and many suggestions and questions have been received. Continued efforts in this area will be required to fully determine the machine performance at other locations and to assess farmer reaction and market potential for each of the machines.

An effort is being made to develop consistent and uniform test procedures for each machine. The objective is to establish definite baseline standards of performance to serve as benchmarks for comparing the performance of different machines.

Economics of Mechanization

Table Thresher Cost Evaluation

The table thresher is now being produced and marketed by two firms in the Philippines. Because of its relatively recent introduction, there have been few opportunities to observe the machine in use by owner-operators or assess its economic potential in a field environment. The engineering department has, however, conducted extensive field trials and demonstrations with the machine to gather technical and operational information. The data from these trials plus limited cost figures supplied by manufacturers form a tentative basis from which the table thresher's ownership and operational characteristics can be approximated.

Table 8 contains the estimated fixed and variable costs associated with ownership and operation of the thresher. These estimates should be regarded as conservative approximations. With more complete production tooling by manufacturers initial investment outlays may be reduced below the amount shown. Also, operational labor requirements may decline as users gain experience in the placement and feeding of the machine. In the present budget, labor costs constitute a significant share of the total variable costs attributable to machine operation. If a farmer elects to utilize family labor with a low opportunity cost, the labor component of total average costs may be further reduced.

Yield per hectare has a crucial effect on the determination of average total costs. Where low yields are encountered, low output rates result with a consequent decline in machine efficiency and an increase in per unit output costs. While yields and output are positively correlated, output is also affected by other factors such as the total amount of materials (grain and straw) which must be handled to achieve a given output, the experience of the threshing crew, and the moisture content of the grain. Threshing a long-strawed variety and short-strawed variety with comparable yields, indicates a lower output rate for the long-strawed variety because of the greater weight of materials which must be handled.

Figure 23 shows the estimated average total costs for the table thresher under various yield and hourly output conditions. The improved varieties shown have a yield of 3.7 tons/ha while traditional varieties yield 2.9 tons/ha. The custom rate shown is calculated as 5 percent of the crop threshed using as a basis a price of ₱635 per ton for paddy.

Operating the machine under optimal conditions where high-yielding varieties are being threshed by an experienced, well-trained crew, a farmer may expect to cover his total costs by threshing about 16 hectares of paddy per year. When threshing low-yielding varieties under low output conditions, the required threshold acreage to justify investment in the machine increases to 30 hectares. In summary, it appears that the table thresher will find its greatest market in those areas where high yields are obtained, where high labor costs are encountered, and where double cropping is practiced. A change in one or more of the economic factors mentioned may alter these

conclusions. An increase in the wage rate or the price of paddy or a decrease in the purchase price of the machine will increase the economic viability of the machine.

Economic Evaluation of the Power Grain Cleaner

The original design objective in the development of the power grain cleaner was a highly efficient, low-cost machine suitable for use by small and medium-sized farmers which would perform the grain cleaning function presently being carried out by manual methods or simple hand winnowing machines.

It soon became apparent that the original design parameters were being exceeded both in terms of rated capacity and investment cost. Under ideal conditions, the machine has an output of from 2 to 3 tons of clean grain per hour, which is three to four times that of manually operated machines. Preliminary indications from manufacturers are that the retail cost of the machine (with engine) will exceed 3000 pesos ($500). Given these cost and performance factors, an economic assessment was made to determine the annual level of utilization necessary to make use of the machine economically attractive and whether a market exists for a mchine of this type.

Table 7 contains the cost components and underlying assumptions employed in the analysis. The results of the calculations are shown graphically in Figure 24 which expresses utilization in terms of tons of grain cleaned per year. Comparing the resulting total average cost curve with the costs of conventionally employed methods of cleaning grain provides a basis for computing the "threshold" tonnage beyond which the power cleaner is profitable.

Given the assumptions regarding wage and custom rates, purchase price, and output, the power cleaner must be used in excess of 200 tons per annum to justify acquisition. Where a nominal custom rate of one percent of the output is charged, minimum annual utilization must increase to 240 tons. Based on an output of 2 tons/hr and an 8-hour day, the machine would have to be operated a minimum of 15 days per year. Except for custom operators and relatively large land holders, this use level exceeds the requirements of most individual farmers. However, it is well below the minimum use requirements of medium and large scale rice millers, many warehouse operators and some agricultural cooperatives. In fact, many potential owners in the latter categories have expressed interest in purchasing the machine because of its simplicity, easy maintenance and high capacity. The machine also demonstrates good potential for cleaning crops such as wheat, barley and sorghum, which, when proven technically feasible, will considerably enlarge the prospects for widespread acceptance in countries such as India and Pakistan.

An increase in the wage rate or decrease in the manufacturing cost would further increase the power cleaner's economic advantage over traditional techniques.

Devaluation and Hand Tractor Use in Laguna: a further note

During 1969-70 a survey was conducted of 140 hand tractor owners in Laguna Province, the Philippines. The objectives of this study were to determine the cost and use patterns for two-wheeled walking tractors. The results of that survey are found in semiannual progress reports Nos. 10 and 11. Report No. 11 also contains a preliminary assessment of the effects of the 1970 devaluation of the Philippine peso on hand tractor utilization. One conclusion from the study was that owners who had purchased machines prior to devaluation would be in a relatively advantageous position following the upward adjustment in the costs of imported equipment and fuel. Because of the arbitrary nature of the assumptions used in arriving at the above conclusion, a decision was made to resurvey 45 of the original 140 respondents to determine actual post-devaluation farm level prices and to ascertain the response of farmers to changes in costs brought about by devaluation.

Table 9 summarizes the post-devaluation price situation. All costs have gone up appreciably as a result of the change in the exchange rate. The initial response of tractor owners was to raise the custom rate from ₱35 to ₱45 per day. However, this represented a short-run disequilibrium and shortly after devaluation the custom rate stabilized at ₱40 per day. This increase was comparable to the calculated increase of ₱4.6 necessary to cover total average costs given in report No. 11. The earlier calculation, however, was based on the assumption that utilization rates would remain constant. Table 10 derived from the most recent survey shows that the tractor workload has increased and that current average costs are actually higher than those of the earlier estimates. A rise in repair costs accounted for the major portion of the total increase (Table 11).

Following devaluation, total hand tractor utilization increased by an average of 12 percent, principally in the area of expanded custom operations. This increase in custom utilization of hand tractor was partially due to an increase in total tractor numbers. Increased tractor numbers tended to reduce the amount of custom work being performed by the lightweight 6 hp tractors (Type I) and forced others out of custom operations entirely (Table 12).

Using data contained in Table 10, a series of calculations were made to determine the increase in custom rates necessary to offset increased costs (Table 13). The results of these calculations indicated that most custom operators are charging slightly more than is necessary to offset the recent increase in costs. With the increased utilization already noted, it is apparent that most machines covered in the survey are being used efficiently and profitably.

Seeding-Weeding Interaction Trial

Semiannual report No. 10 contains a partial budgeting analysis of the IRRI developed row seeder. The results of this study indicate that the

seeder can be effectively utilized by farmers growing as little as to 2 to 3 hectares of rice. A major shortcoming of the analysis was the failure to include consideration of concomitant changes in other cultural practices necessary to achieve optimum yields when using the seeder. Those who have utilized the machine contend that the substantial decrease in labor (and costs) employed during planting is largely offset by an increase in labor requirements for weeding at a subsequent stage of plant growth. To determine changes in post-planting cultural practices resulting from use of the row seeder, an experiment involving alternative methods of seeding and weeding was conducted at IRRI during the 1970 dry season.

Materials and methods

Three alternative methods of seeding - row seeding using the mechanical seeder, broadcasting and transplanting were evaluated using IR22. In addition, ten different weeding treatments were employed. These included three different frequencies of hand, rotary and power weeding -- no weeding or control, weeding at 28 days after seeding (DAS), and at 28 and 42 DAS -- used on row seeded and transplanted plants. Three types of granular herbicides were used on broadcast, row-seeded and transplanted plots. Figure 25 summarizes the treatments used.

Weed samples were taken from each plot at the grass heading stage (approximately 35 days before harvest). These samples were dried and weighed to compare weed survival in the treated plots with those of the non-weeded controls.

Grain yield was based on 5 sq m crop cuts taken at the center of each plot. Data on yield, weed weight and time of weeding were analyzed statistically and the treatment means compared using analysis of variance (Tables 18, 19, 20 and 21).

Results

Table 14 summarizes the yields obtained from each treatment. Significant differences were noted between the controls and the hand-weeded as well as between both row-seeded and transplanted plots treated with herbicides. For both hand weeding and herbicide treatments, there were no significant yield differences between row-seeded and transplanted plots. Regardless of the method and frequency of weeding employed, there was no observable difference between yields obtained within transplanted plots. This is in contrast to the row-seeded plots where significant yield differences exist between hand weeding and herbicide treatments on the one hand and rotary and power weeding on the other.

There was no appreciable yield difference between the control and both the mechanical and power weeding treatments for row-seeded plots. Unlike transplanted rice, there are no discrete hills in the row-seeded treatments and as a consequence, when using mechanical or power weeders, only the weeds between rows are alleviated. As a result, the remaining weeds within

the rows have a deleterious effect on yields. Note also the seemingly inconsistent results obtained from the manual, rotary and power weeding treatments. For both row-sown and transplanted rice, yields from plots which were handweeded twice are higher than those receiving only single handweeding treatments. Although the same results might have been expected from the hand rotary or power weeding treatments, the plots which were rotary and power-weeded twice yielded less than single weeding treatments using the same method. This phenomenon seems to be related to the time at which the plots received the second weeding -- 42 days after seeding. Damage was more extensive using the power weeder because many of the plants were bent and crushed beneath the rotating axle which is only 5 inches from the ground. Table 15 shows the dry weed weight of grasses, broad-leaves, and sedges taken from the alternative weeding treatments. The three granular herbicides employed exhibited equally effective control for the three methods of seeding. Handweeding also controlled weeds effectively in row-sown and transplanted plots. Weed weights obtained from the rotary and power weeding treatments are substantially higher than those of other weed control treatments. Weeds which remain within the rows following rotary or power weeding account for much of the observed difference. For both row-sown and transplanted rice, the second weeding treatment at 42 days after seeding appears to have only a negligible effect. Hence, it appears that the timing rather than the frequency of weeding is a major determinant of effective weed control.

Under lowland conditions, weeds are extremely competitive with rice plants in the absence of suitable control measures. It has been estimated that from 160 to 240 man-hrs/ha are needed for effective control of weeds using handweeding and about 38 man-hr using push-type rotary weeders. The experimental results conform to these estimates for handweeding. However, for rotary weeding, substantially higher figures were obtained (Tables 16 and 17). This is in large part due to the small size of the plots used in the experiment.

Economic implications

Table 22 shows the costs and returns associated with each treatment. The highest increase in yield (net of weeding cost) of 4.6 metric tons per hectare was obtained from the application of "Saturn" on broadcast rice. The effectiveness of granular herbicides on all seeding treatments was substantial -- stressing their applicability to either direct seeded or transplanted rice. Note that, in comparing handweeding with herbicides in both row-sown and transplanted rice, the results are strikingly similar.

Yield increases must be measured in terms of the increased returns attributable to investments in a particular method of seeding or weeding. To provide some indication of the relative profitability of the different treatments, the net returns of each treatment were computed and are shown in Table 22. Caution should be exercised in interpreting these results, however. The control plots exhibited abnormally low yields as a consequence of high weed infestations resulting from intentional sowing of weed seed. Also, the fixed costs associated with ownership of the power weeder were not

included in the calculations attributable to this weed control treatment.

The economic returns from use of granular herbicides are consistently high in both direct seeded and transplanted rice. The economic advantage of using either herbicides or handweeding can be ascertained on the basis of cost of the herbicide, the labor savings achieved through substitution of the chemical for handweeding, and the cost of labor. These three factors are depicted graphically in Fig. 26.

The cost of the herbicide is shown on the vertical axis and the price of labor on the horizontal axis. The lines labeled A, B, and C define the zones of economic advantage between the use of herbicides and handweeding. Any combination of labor and herbicide cost that lies to the left and above the lines results in a net gain for handweeding. If the intersection point defined by the cost of herbicide and wage rate falls on the line, the cost of either method would be equivalent. Conversely, it would cost less to use herbicide than to handweed if the intersection point had fallen to the right and below the lines.

The results of the experiment indicated that about 175 man-hr of handweeding labor (line A) were saved by the application of herbicide in both row-sown and transplanted rice. A complete application of Machete costs about ₱80/ha. Assuming that the farm wage rate is ₱4.50/day, the intersection point lies below line A. At this point it is more profitable to apply the herbicide than to hire 175 hours of hand labor to perform the task. If only 125 hours are saved (line B), it would pay to handweed rather than to apply herbicide. If the assumption is made that the saving in labor remains constant for all treatments, the competitive position of herbicides improves as the wage rate increases or the cost of the chemical decreases.

Manufacturing Case Study

During the preceding work period, a case study was undertaken in cooperation with the Harvard Advisory Group to ascertain some of the characteristic problems which small-scale manufacturing firms encounter in the production and marketing of new products The results of the one study which was completed indicated that for a single proprietorship firm, management becomes a binding constraint as firm size increases. The firm surveyed had reached a size in its development which required diversification in management beyond the capabilities of a single individual. The present owner-manager of the firm is also its only engineer and designer Credit did not appear to be a major constraint, although raw materials and stock inventory levels were kept low to avoid tying up funds. Methods of production were relatively labor-intensive and the investment in plant and equipment was fully depreciated. Poorly developed marketing channels were a difficulty, although many products were built on consignment for others, thereby eliminating the need for a direct outlet. A lack of potentially profitable products was cited as a major problem and was the reason given for interest in the machine design and development activities at IRRI. A written report summarizing the results of this case study is available upon request from the department.

WORK PLAN

JULY 1 TO DECEMBER 31, 1971

Field Machinery

Individual-row metered seeder

Continued efforts will be made to eliminate the problem of bridging in the seed hopper. Modifications will also be introduced to increase the precision with which the machine meters pregerminated seed.

Multipurpose seeder

Tests will be continued with this machine to ascertain its economic and technical potential. Refinements will be introduced to lighten the machine and to make the metering mechanism more adaptable to a wider variety of crops. Experiments will be continued on the use of this seeder under upland conditions.

PTO thresher

Work will continue on the optimization of the rotary separator component of this machine. The major focus of work will be on increasing the capacity of the separator to a level comparable to that achieved in the cylinder-concave component.

Multicrop thresher

Fabrication work on an initial prototype model will be undertaken during the current work period. Refinements on the design of this machine will be worked out in close collaboration with concerned Taiwanese authorities.

Underfed thresher

Work will be continued on the underfed thresher described in report No. 11. A number of tests will be conducted to assess its technical and economic characteristics. If the results of these tests are encouraging, work will be initiated on a second prototype.

Stripper harvester

During the current work period, evaluation and testing will be undertaken utilizing the laboratory test model described in this report. Results emanating from these tests will allow refinements to be made in the field machine which will reduce grain scattering losses and increase the operating efficiency of the machine.

Differential slip tiller

Utilizing the improved differential slip tiller described in the current report, further trials will be conducted utilizing various speed ratio differentials between the two axles on the machine. Attempts will be made to control the machine sinkage by mounting a skid between the cage wheels.

Hand tractor

Design and development work on a simple lightweight hand tractor utilizing locally available parts and resources has begun. An initial design, utilizing only chain drives in the power transmission unit, will be employed. An alternative design utilizing component parts from the jeep manufacturing industry in the Philippines will also be considered.

Anhydrous ammonia applicator

Development work on the anhydrous ammonia applicator will be resumed during the current work period. The objectives are to improve placement precision and the distribution uniformity of the machine and to overcome earlier problems encountered in the transfer of low temperature-high pressure ammonia gas under flooded lowland conditions.

Low lift pump

Work has begun on the design and fabrication of a low-cost, diaphragm type irrigation pump. A second prototype model is currently under evaluation.

Drying and Processing

Manually operated grain cleaner

Testing will continue on the first prototype to determine its comparative performance with other locally available machines. Further modifications will be made to reduce fabrication costs and to increase output.

Heated sand drier

Previous research findings utilizing the heated sand drier indicate that only paddy with a high initial moisture content (30% and above) gave increased head yields when dried using this machine. Paddy below 30 percent has to be presoaked before drying. Experiments will be conducted to determine the optimum temperature levels required for drying paddy with low initial moisture contents.

Direct flame drier

Preliminary results indicate that heating paddy to a point at which gelatinization temperatures are achieved followed by tempering in a closed container increases milling recovery and head yield. Experiments are underway to determine the optimum initial moisture content in the grain, the duration of exposure to the flame, and the optimum tempering period. Further research will be undertaken to determine the required grain input/energy input requirements for achieving optimum results.

Rice hull furnace

Further work will be conducted on the development of an improved cascading type grate to achieve higher heat output without increasing the size or cost of the furnace.

Centrifugal rice mill

Milling tests utilizing a centrifugal huller will be continued to determine optimum speeds, input rates, power requirements, and grain output characteristics.

Test and Evaluation

Commercial threshers

Tests will continue on commercially available threshers to evaluate threshing efficiency, losses, and labor and power requirements.

Thresher performance standards

A study will be conducted to establish certain performance "yardsticks" for hold-on type threshers. These performance yardsticks will permit objective comparison of thresher performance.

Rotary grain cleaner

Performance tests will be continued to obtain optimum cleaning efficiency and provide assistance to the manufacturers involved in their initial production effort.

IRRI machine development

Performance tests and manufacturing evaluation studies of experimental machine developments underway in the Agricultural Engineering Department at IRRI will be continued.

Test and evaluation program assistance

Continued test and evaluation assistance will be provided to manufacturers and designers. Assistance will be provided in establishing test and evaluation procedures and requirements, test programs and utilization of test results in improving product performance, quality and manufacturing methods.

Economics of Mechanization

Rice milling and processing technologies

A basic study is being undertaken to ascertain the technical and economic characteristics of small- and medium-scale rice milling and processing plants in the Philippines. The major focus of this study will be to determine the milling efficiency of different types and sizes of plants, to assess the economic structure of milling operations and to compare currently utilized technologies with modern, improved processing methods. The results of this study will be utilized in formulating the design parameters for rice milling equipment presently under development.

Small-scale industrial study

Evaluation of the direct and indirect effects of mechanization must include a detailed consideration of the labor absorption capabilities of firms supplying equipment for mechanization. A study is underway to determine the technical and economic characteristics and the limitations to expansion and growth of small- to medium-scale firms producing agricultural machinery.

Grain loss study

The objective of this study is to determine paddy loss characteristics which occur when using alternative harvesting-threshing techniques in the Philippines.

Impact of varietal technologies on labor, power and equipment requirements

This study is being undertaken to assess the changes in labor and power input requirements induced by the introduction of new rice varieties in the Philippines and other countries in Southeast Asia. Data gathered as a result of the study will be incorporated into a programming model for use in the machinery design program at IRRI.

Individual project cost analyses

As in the past, the economics group will continue to assess the economic viability and cost characteristics of each piece of equipment emanating from project design and development activities. During the next reporting period, work will be undertaken to determine the preliminary cost estimates for the PTO driven thresher and grain driers.

PERSONNEL LIST

Personnel and their respective man-months engaged in the project for the past six months, January 1to June 30, 1971:

Position	Name	From January 1/71 To June 30/71
Development Engineer & Project Leader	A. U. Khan[a/]	4.5
Evaluation Engineer	F. E. Nichols	6
Agricultural Economist	Bart Duff	6
Assistant Design Engineer	E. O. Casem	5.33
Assistant Design Engineer	P. Cabanos	6
Assistant Design Engineer	A. Manalo	6
Assistant Test Engineer	C. Padolina	1.5
Research Assistant, Agricultural Economics	N. Orcino	6
Research Assistant, Engineering	N. Navasero	6
Research Assistant, Engineering	A. Amilhussin	6
Research Assistant Engineering	E. del Rosario	6
Research Aide, Engineering	B. Ramos	1
Draftsman	F. Jalotjot	6
Draftsman	F. Cabrales	6
Secretary	C. Jizmundo	6
Secretary	V. Maraan	6
Shop Foreman	S. Gutierrez	6
Machinist	Z. Borja	6
Machinist	A. Dizon	6
Tinsmith	E. Dungo	6
Tinsmith	R. Santos	6
Welder	A. Barot	6
Mechanic-Operator	J. Silos Jr.	6
Shop Mechanic	R. Dignadice	6
Shop Mechanic	M. Macatangay	6
Shop Mechanic	P. de Mesa	6
Shop Mechanic	F. Flores	6
Laborer (Shop helper)	M. Castro	6
Laborer (Shop helper)	L. Villegas	6
Laborer (Shop helper)	M. Fabellar	6
Laborer (Student Assistant)	B. Ramos	5

[a/] Part-time.

Anticipated personnel needs for the next six months, July 1 to December 31, 1971:

Position	From July 1/71 To December 31/71
Development Engineer & Project Leader	6
Evaluation Engineer	6
Agricultural Economist	6
Assistant Design Engineer	6
Assistant Design Engineer	6
Assistant Design Engineer	6
Assistant Test Engineer	6
Assistant Test Engineer	6
Research Assistant, Economics	6
Research Aide, Economics	6
Research Aide, Economics	6
Research Assistant, Engineering	6
Research Assistant, Engineering	6
Research Assistant, Engineering	6
Draftsman	6
Draftsman	6
Secretary	6
Secretary	6
Shop Foreman	6
Machinist	6
Machinist	6
Tinsmith	6
Tinsmith	6
Welder	6
Mechanic-Operator	6
Shop Mechanic	6
Shop Mechanic	6
Shop Mechanic	6
Shop Mechanic	6
Laborer (Shop helper)	6
Laborer (Shop helper)	6
Laborer (Shop helper)	6
Laborer (Student assistant)	6

Table 1. Power distribution between tractor axle and PTO during rotary tillage in upland.

Treatment no.	Tractor gear setting	Tractor travel speed (cm/s)	Rear wheel speed (rpm)	Tine shaft speed (rpm)	Rear wheel slippage (%)	Tillage depth (cm)	Mean torque		Required hp		Basic frequency f_o (cps)	Rotary tiller mean pitch (cm)
							PTO (kg-m)	Rear axle (kg-m)	Rotary tiller (hp)	Rear axle (hp)		
1	1st	51.4	6.4	480	1.04	10.5	69.1 (17.1)*	79.0	33.2	0.8	8.00	6.4
2	1st	50.7	6.3	495	0.21	11.0	67.1 (16.3)	74.7	46.4	0.7	8.25	6.2
3	2nd	84.6	10.0	482	0.83	8.0	70.2 (17.0)	120.3	47.2	1.7	8.03	10.5
4	2nd	81.7	10.0	470	-0.84	8.5	75.5 (12.1)	95.0	49.6	1.3	7.83	10.4
5	3rd	127.0	15.6	485	-3.56	7.5	66.9 (15.8)	126.0	45.3	2.6	8.08	15.7
6	3rd	138.0	17.0	491	-0.83	8.0	66.6 (17.3)	137.4	45.7	2.3	8.19	16.9
7	4th	198.7	24.4	473	-8.16	6.0	72.9 (20.1)	155.4	48.1	5.3	7.88	24.8
8	4th	156.0	19.7	482	-4.18	6.5	74.7 (21.3)	150.3	50.3	2.0	8.03	19.4

*Indicates standard deviation of PTO torque.

Table 2. Power distribution between tractor axle and PTO during rotary tillage in lowland.

Treatment no.	Tractor gear setting	Tractor travel speed (cm/s)	Rear wheel speed (rpm)	Tine shaft speed (rpm)	Rear wheel slippage (%)	Mean torque PTO (kg-m)	Mean torque Rear axle (kg-m)	Required hp Rotary tiller (hp)	Required hp Rear axle (hp)	Basic frequency f_o (cps)	Rotary tiller mean pitch (cm)
1	1st	44.2	6.3	493	14.00	34.7 (15.6)*	180.0	23.9	1.6	8.23	5.3
2	1st	38.1	5.7	491	17.60	71.7 (16.7)	205.7	49.1	1.7	8.19	4.6
3	2nd	65.1	9.5	491	15.90	55.5 (15.3)	196.0	38.1	2.6	8.19	7.9
4	2nd	78.0	11.8	493	18.40	67.3 (17.2)	230.3	46.3	3.8	8.23	9.5
5	3rd	92.7	13.4	490	14.65	9.5 (5.7)	308.0	7.2	5.8	8.17	11.3
6	3rd	120.0	16.5	487	10.45	19.7 (10.3)	335.4	13.4	7.7	8.11	14.7
7	4th	147.5	20.9	491	13.60	13.4 (3.4)	373.0	9.2	10.1	8.19	17.9
8	4th	140.0	20.3	492	15.30	31.0 (10.7)	385.0	21.3	10.9	8.20	17.1

*Indicates standard deviation of PTO torque.

Table 3. Performance characteristics of three blade-lug wheel arrangements.

Test No.	Description of blade arrangement*	At 50% slip: Wheel torque kg-m	Wheel rpm	Axle hp	Draw-bar pull kg	Ground speed m/sec	Draw-bar hp	Traction efficiency	At 85% slip: Wheel torque kg-m	Axle hp	Draw-bar pull kg	Ground speed m/sec	Draw-bar hp	Traction efficiency	Area** lb-in/in³
+ 2.5 in. position:															
412	1	560	7.5	5.79	1100	.299	4.32	74.5	680	7.03	625	.09	.738	10.5	8700
4502	2	340	7.5	3.52	600	.300	2.36	67.0	450	4.67	900	.09	1.06	22.7	7330
4503	2	270	7.35	2.74	500	.292	1.91	70.0	500	5.07	1050	.088	1.2	23.7	7330
4601	3	250	7.15	2.46	400	.235	1.24	50.4	380	3.75	950	.086	1.06	27.3	8520
+ 4 in. position:															
514	1	790	7.32	7.98	1150	.292	5.55	69.5			1400	.088	1.62		6700
5501	2	490	7.5	5.07	1050	.299	4.33	85.5	540	5.59	1100	.09	1.29	23.1	5430
5502	2	420	7.5	4.35	[illegible]	.299	3.53	81.2	440	4.56	1200	.09	1.41	31.0	5430
5602	3	380	7.35	3.85	730	.292	2.68	69.6	555	5.63	1350	.09	1.55	27.0	8630

* 1 = 6 blades, 25° leading face angle
2 = 5 blades, 25° " " "
3 = 5 blades radial leading face angle

** Area under the penetrometer curve (Fig. 17) from 0 to 9 in. soil depth.

Table 4. Effect of drum diameter and speed on output (kg/sec) using 3/8-in. size rotary screen.

RPM	Drum Diameter (ft)			
	1 3/4	2	2 1/4	2 1/2
8	1.365	1.394	1.662	1.810
12	1.565	1.625	1.784	1.915
16	1.700	1.882	1.890	1.950
20	1.795	1.955	1.944	1.980
24	1.670	1.980	1.951	1.955
28	1.670	1.965	1.955	1.940
32	1.620	1.961	1.950	1.925

Table 5. Summary of regression equations.

Drum diameter	Regression equation[a/]	R-squared
1 3/4 ft	$Q = -0.8088 + 1.1085 N^{\frac{1}{2}} - 0.1206 N$	0.9318
2.0 ft	$Q = -1.0967 + 1.2115 N^{\frac{1}{2}} - 0.1189 N$	0.9856
2 1/4 ft	$Q = 0.4844 + 0.5702 N^{\frac{1}{2}} - 0.0551 N$	0.9941
2 1/2 ft	$Q = 0.9212 + 0.4560 N^{\frac{1}{2}} - 0.0495 N$	0.9739

[a/] N = rotational speed

Q = output

Table 6. Optimum rpm for maximum output.

Drum diameter	Optimum rpm
1 3/4 ft	21.16
2.0 ft	26.8
2 1/4 ft	26.7
2 1/2 ft	21.16

Table 7. Cost of ownership and operation of the power grain cleaner.

Item	Pesos
Initial cost	3400.00
Estimated service life, yr.	5
Fixed costs	
Depreciation[1/]	680.00
Interest[2/]	204.00
Repairs/replacements[3/]	340.00
Total	1224.00
Variable costs/ton*	
Fuel[4/]	0.11
Labor[5/]	1.12
Total	1.23

1/ Straight-line depreciation assumed
2/ 12% per year
3/ 10% of initial cost
4/ 0.67 li/hr @ ₱0.33/li
5/ 3 men @ ₱6/man/8-hr day
* 2 tons/hr output

Table 8. Costs of ownership and operation of the IRRI table thresher.

Item	Pesos
Initial cost	3200
Estimated life, yr	5
Fixed costs	
Depreciation[1/]	640
Interest[2/]	192
Repairs/replacements[3/]	320
Total	1152
Variable costs/hr	
Fuel and oil[4/]	.22
Labor[5/]	4.50
Total	4.72

1/ Straight-line depreciation assumed

2/ 12% on average investment over life of machine

3/ 10% of initial purchase cost

4/ Fuel consumption at 0.67 liter/hour

5/ ₱.75 per hour; 4 men threshing and 2 men carrying and stacking materials

Table 9. Changes in input cost items for hand tractor operation in Laguna, 1969 to 1970.

Item	Tractor type[a/]			All types
	I	II	III	
Fuel, ₱/lit	0.31(14.81)*	0.31(14.81)	0.24(41.18)	0.29(16.00)
Oil, ₱/lit	2.10(40.00)	2.10(40.00)	2.10(40.00)	2.10(40.00)
Spare parts, ₱	58.50*	105.70*	70.70*	78.30*
Labor, ₱/8-hr-day	6.00(50.00)	6.00(50.00)	6.00(50.00)	6.00(50.00)
Custom rate, ₱/8-hr-day	40.00(14.28)	40.00(14.28)	40.00(14.28)	40.00(14.28)

[a/] Hand tractors are briefly classified into three types. Type I tractors are lightweight, usually equipped with 4 to 6 hp gasoline engines, are not equipped with differentials and have no steering clutches. Type II tractors are relatively more powerful (up to 8 hp) with multispeed shifting transmissions, and are equipped with steering clutches. Type III tractors have the same provisions as type II but are equipped with 8 to 14 hp diesel engines.

*Percentage increase over the pre-floating rate level.

Table 10. Average costs of operation, 45 hand tractors, Laguna, 1970.

Item	Tractor Type I	Tractor Type II	Tractor Type III	All types
No. of observations	15	15	15	45
Annual use, hr	431(-11.32)**	601(35.97)	644(< 1)	559(11.99)
Variable costs/hr				
Fuel	0.36(12.50)	0.36(12.50)	0.25(38.89)	0.32(10.34)
Oil	0.13(44.44)	0.15(36.36)	0.15(36.36)	0.14(40.00)
Repairs	0.79(125.71)	0.49(68.96)	0.75(-1.33)	0.68(74.36)
Labor	1.50(50.00)	1.50(50.00)	1.50(50.00)	1.50(50.00)
Total	2.78(57.95)	2.50(45.35)	2.65(45.35)	2.64(48.31)
Average total cost/hr*	4.17(39.00)	3.52(13.55)	4.42(15.40)	4.13(26.30)

*Fixed cost held constant at pre-devaluation level.

**Percentage increase over pre-devaluation level.

Table 11. Changes in repair costs for hand tractors in Laguna, 1969 to 1971.

Item	Repair costs in 1971[a]		
	More	Less	Same
Type I tractors:			
No. reporting	10	4	1
Factors behind change:			
Frequent breakdown	5	-	-
Higher cost of spare parts	7	-	-
Better care	-	4	-
No answer	-	-	1
Type II tractors:			
No. reporting	8	4	3
Factors behind change:			
Frequent breakdown	5	-	-
High cost of spare parts	4	-	-
Better care	-	1	3
No answer	-	1	3
Type III tractors:			
No. reporting	8	2	5
Factors behind change:			
Frequent breakdown	3	-	-
High cost of spare parts	3	-	-
Better care	-	2	-
No answer	-	-	5

[a] Repair costs in 1969 as base.

Table 12. Changes in the extent of custom operations, Laguna, 1971.

Item	Custom work in 1971[a]		
	More	Less	Same
Type I tractors:			
No. reporting	2	8	5
Factors behind change:			
Greater demand	2	-	-
More tractors	-	3	-
Stopped doing custom work	-	5	-
Regular customers	-	-	5
Type II tractors:			
No. reporting	8	4	3
Factors behind change:			
Greater demand	8	-	-
More tractors	-	2	-
To avoid breakdowns	-	1	-
No answer	-	1	3
Type III tractors:			
No. reporting	4	5	6
Factors behind change:			
Greater demand	4	-	-
More tractors	-	3	-
Regular customers	-	-	6
No answer	-	2	-

[a] Custom work in 1969 as base.

Table 13. Custom rates and annual utilization required to break even, 45 hand tractors, Laguna, 1971.

Tractor	Custom rate (₱/hr)		Annual use, hr	
	Actual	Needed	Actual	Needed
Type I	5.00	4.17	431	271
Type II	5.00	3.52	601	244
Type III	5.00	4.42	644	486
All types	5.00	3.95	559	310

Table 14. Grain yield, 1970 dry season.

Weeding method	Seeding Method			Weeding mean
	Seeder	Transplant	Broadcast	
	metric tons per hectare			
Control	2.60	3.60	1.77	2.66
HW1X	5.77	6.23	--	6.00
HW2X	6.09	7.22	--	6.66
RW1X	3.78	6.20	--	4.99
RW2X	3.59	5.85	--	4.72
PW1X	4.61	6.04	--	5.32
PW2X	2.91	5.74	--	4.32
Saturn	6.23	5.94	6.53	6.23
Machete	6.08	6.69	6.27	6.35
C-285	5.85	6.83	5.87	6.18
Seeding mean	4.75	6.03	5.11	

LSD (.05) = 1.66 m.t./ha.
(.01) = 2.16 m.t./ha.

Table 15. Weed weight, 1970 dry season.

Weeding method	Seeding Method: Seeder	Transplant	Broadcast	Weeding mean
	(gm/0.2m^2)			
Control	104.33	93.00	249.67	111.75
HW1X	38.67	10.67	-	98.66
HW2X	5.33	0.67	-	24.67
RW1X	226.33	38.67	-	3.00
RW2X	164.33	35.67	-	132.50
PW1X	134.33	39.67	-	100.00
PW2X	145.33	51.67	-	87.00
Saturn	41.00	46.67	3.00	30.22
Machete	75.33	3.33	0.00	26.22
C-285	13.67	32.00	6.00	17.22
Seeding mean	94.86	35.20	64.67	

LSD (.05) = 104.82 gm/0.2m^2

(.01) = 136.60 gm/0.2m^2

Table 16. Weeding requirements, 42 DAS, 1970 dry season.

Weeding method	Seeding Method: Seeder	Transplant	Weeding mean
	(man-hours/ha)		
HW2X	52.72	41.58	47.15
RW2X	19.33	36.42	27.87
PW2X	16.09	14.22	15.16
Seeding mean	29.38	30.74	

LSD (.05) = 12.06 man-hours/ha.

(.01) = 16.76 man-hours/ha.

[a] Represents one time over plot.

Table 17. Weeding requirements, 28 DAS, 1970 dry season.[a]

Weeding method	Seeding method: Seeder	Seeding method: Transplant	Weeding mean
	(man-hours/hectare)		
HW1X	165.37	130.46	147.91
HW2X	132.49	126.96	129.72
RW1X	62.17	124.77	93.47
RW2X	57.33	161.04	109.18
PW1X	18.41	52.46	35.44
PW2X	20.08	55.90	37.99
Seeding mean	75.98	108.60	

LSD (.05) = 55.97 man-hours/ha.
(.01) = 16.76 man-hours/ha.

[a]Represents one time over plot.

Table 18. Analysis of variance for grain yield (m.t./ha), seeding-weeding method trials, 1970 dry season.

SV	df	SS	MS	F
Total	71	198.80360		
Replication	2	1.83689	0.91844	
Treatment	23	151.42400	6.58365	6.65**
Error	46	45.54271	0.99005	

*Significant at the 1% level.

Table 19. ANOV for weed weight (gm/0.2 m^2), 1970 dry season.

SV	df	SS	MS	F
Total	71	539,441		
Replication	2	9,446	4,723	
Treatment	23	352,208	15,313	3.96**
Error	46	177,794	3,865	

Table 20. ANOV for weeding (man-hours/ha) at 42 DAS, 1970 dry season.

SV	df	SS	MS	F
Total	17	4265.23		
Replication	2	102.66	51.33	
Treatment	5	3743.15	748.66	17.85
Seeding method (s)	(1)	(8.31)	(8.31)	<1
Weeding method (w)	(2)	(3113.92)	(1556.96)	37.12**
SXW	(2)	(620.92)	(310.46)	7.40**
Error	10	419.42	41.94	

*Significant at the 5% level

**Significant at the 1% level

Table 21. ANOV for weeding (man-hours/ha) at 28 DAS, 1970 dry season.

SV	df	SS	MS	F
Total	35	121,944.73		
Replication	2	4,583.18	2291.59	
Treatment	11	93,327.24	8484.29	7.77**
Seeding (s)	(1)	(9,577.88)	(9577.88)	8.77**
Weeding (w)	(5)	(65,780.30)	(13,156.06)	12.04**
SXW	(5)	(17,969.06)	(3,593.81)	3.29**
Error	22	24,034.31	1092.47	

*Significant at the 5% level

**Significant at the 1% level

Table 22. Cost and returns per hectare. 1970 dry season.

Treatment	Yield	Weeding	Cost of weeding				Returns from weeding	
			Labor*	Chemical**	Total			
	(m.t.)	(man-hr.)	(kilograms of paddy)		kg	Pesos***	m.t.	Pesos*
Seeder:								
Control	2.60	-	-	-	-	-	-	-
HW1X	5.77	165.37	182.40	-	182.40	124.03	2.99	2033.20
HW2X	6.09	185.21	204.28	-	204.28	138.91	3.29	2237.20
RW1X	3.78	62.17	68.57	-	68.57	46.63	1.11	754.80
RW2X	3.59	76.66	80.97	-	80.97	57.50	0.91	618.80
PW1X	4.61	18.41	20.31	-	20.31	13.81	1.99	1353.20
PW2X	2.91	36.17	39.90	-	39.90	27.13	0.27	183.60
Saturn	6.23	8.06	8.88	117.65	126.53	86.04	3.50	2380.00
Machete	6.08	8.44	9.31	117.65	126.94	86.33	3.35	2278.00
C-285	5.85	8.19	9.03	117.65	126.68	86.14	3.12	2121.60
Transplant:								
Control	3.60	-	-	-	-	-	-	-
HW1X	6.23	130.46	143.90	-	143.90	97.84	2.49	1693.20
HW2X	7.22	168.54	185.88	-	185.88	126.40	3.43	2332.40
RW1X	6.20	124.77	137.62	-	137.62	93.58	2.46	1672.80
RW2X	5.85	197.46	217.79	-	217.79	148.10	2.03	1380.40
PW1X	6.04	52.46	57.85	-	57.85	39.34	2.38	1618.40
PW2X	5.74	70.12	77.34	-	77.34	52.59	2.06	1400.80
Saturn	5.94	8.52	9.40	117.65	127.05	86.39	2.21	1502.80
Machete	6.69	8.51	9.38	117.65	127.03	86.38	2.96	2012.80
C-285	6.83	8.97	9.90	117.65	127.55	86.73	3.10	2108.00
Broadcast:								
Control	1.77	-	-	-	-	-	-	-
Saturn	6.53	8.11	8.94	117.65	126.59	86.08	4.63	3148.40
Machete	6.27	7.09	7.82	117.65	125.47	85.32	4.37	2971.60
C-285	5.87	9.18	10.12	117.65	127.77	86.88	3.97	2699.60

*Based on ₱0.68/kg of paddy (₱30/cavan of 44 kg).

**Of the three herbicides, only Machete is commercially available in the Philippines at a cost of ₱80/ha for the rate used in the experiment. It is assumed that the other two herbicides, to remain competitive, would cost no more than this.

***Labor at ₱0.75/hr.

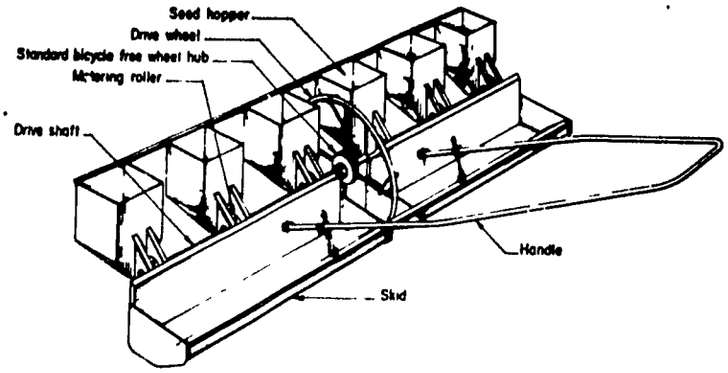

Fig. 1 Individual-row metered seeder for pregerminated paddy.

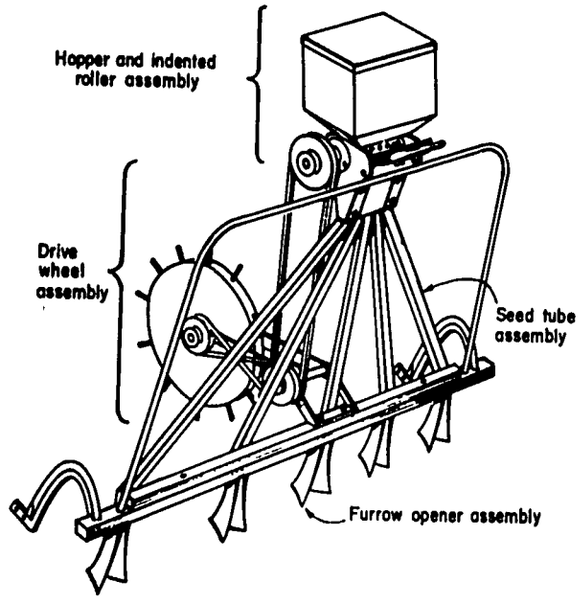

Fig. 2 Multipurpose seeder equipped with furrow openers for dryland sowing.

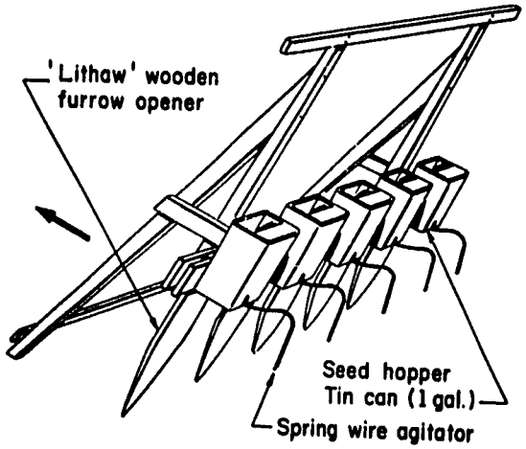

Fig. 3 Simple upland rice seeder.

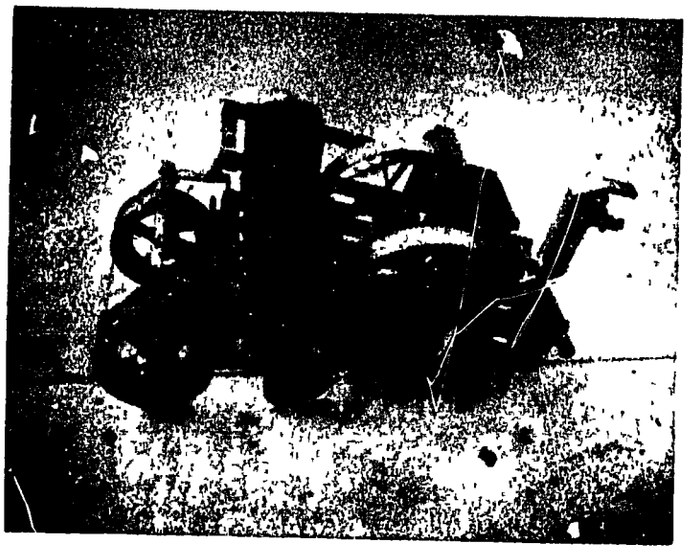

Fig. 4 Commercial multipurpose seeder.

Fig. 5 Common handle for in-line or parallel wheel travel on table thresher.

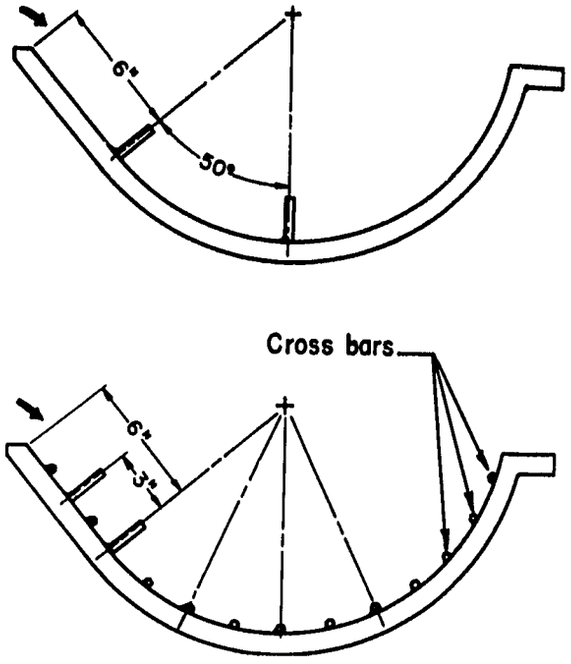

Fig. 6 Alternative teeth arrangements in concave of PTO thresher.

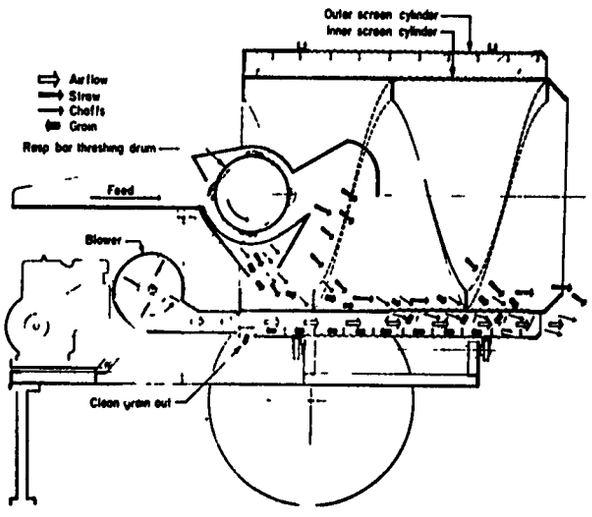

Fig. 7 Schematic diagram of multicrop thresher designed for Taiwan.

Fig. 8 Laboratory model of stripper harvester.

Fig. 9 Blade lug wheel design.

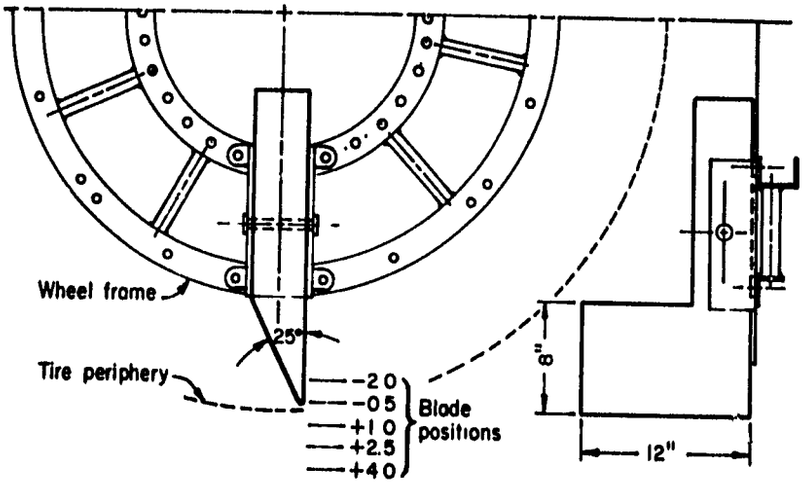

Fig. 10 Specifications of blade lug wheel.

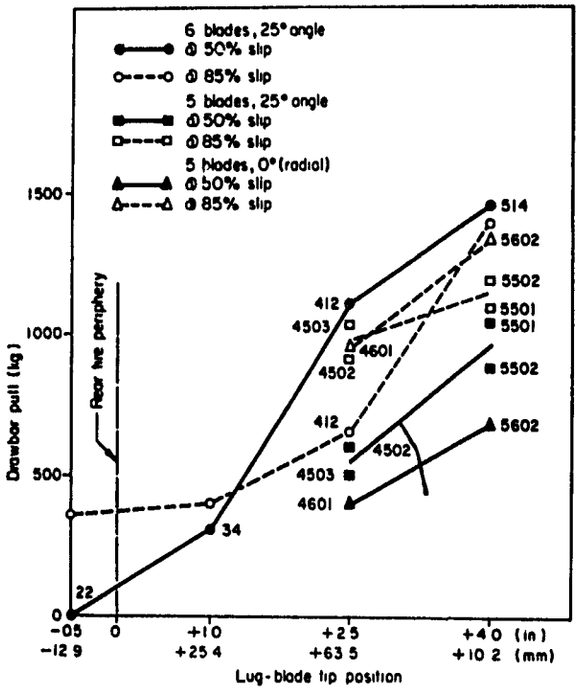

Fig. 11 Relationship between drawbar pull and blade setting.

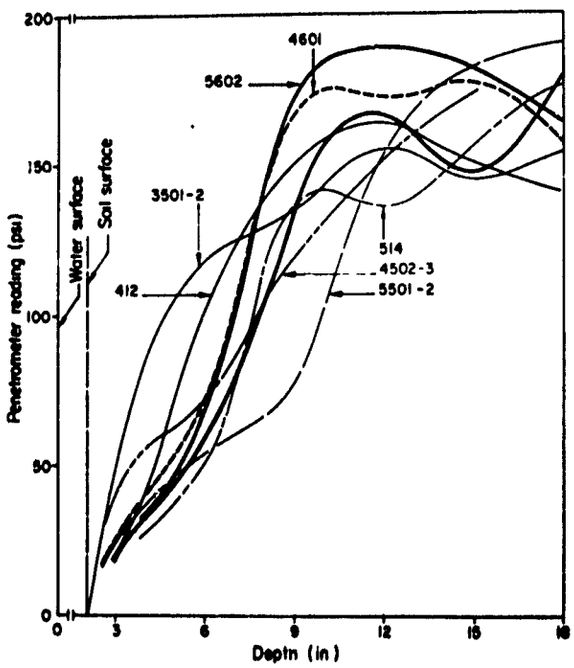

Fig. 12 Penetrometer curves for the blade-lug wheel tests.

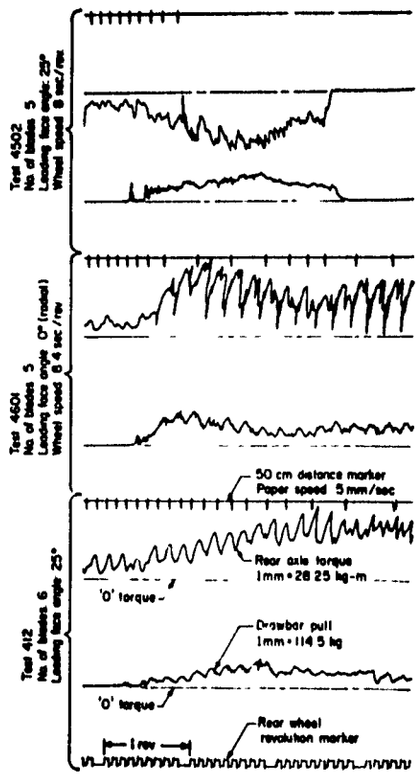

Fig. 13 Typical recordings of drawbar pull and torque.

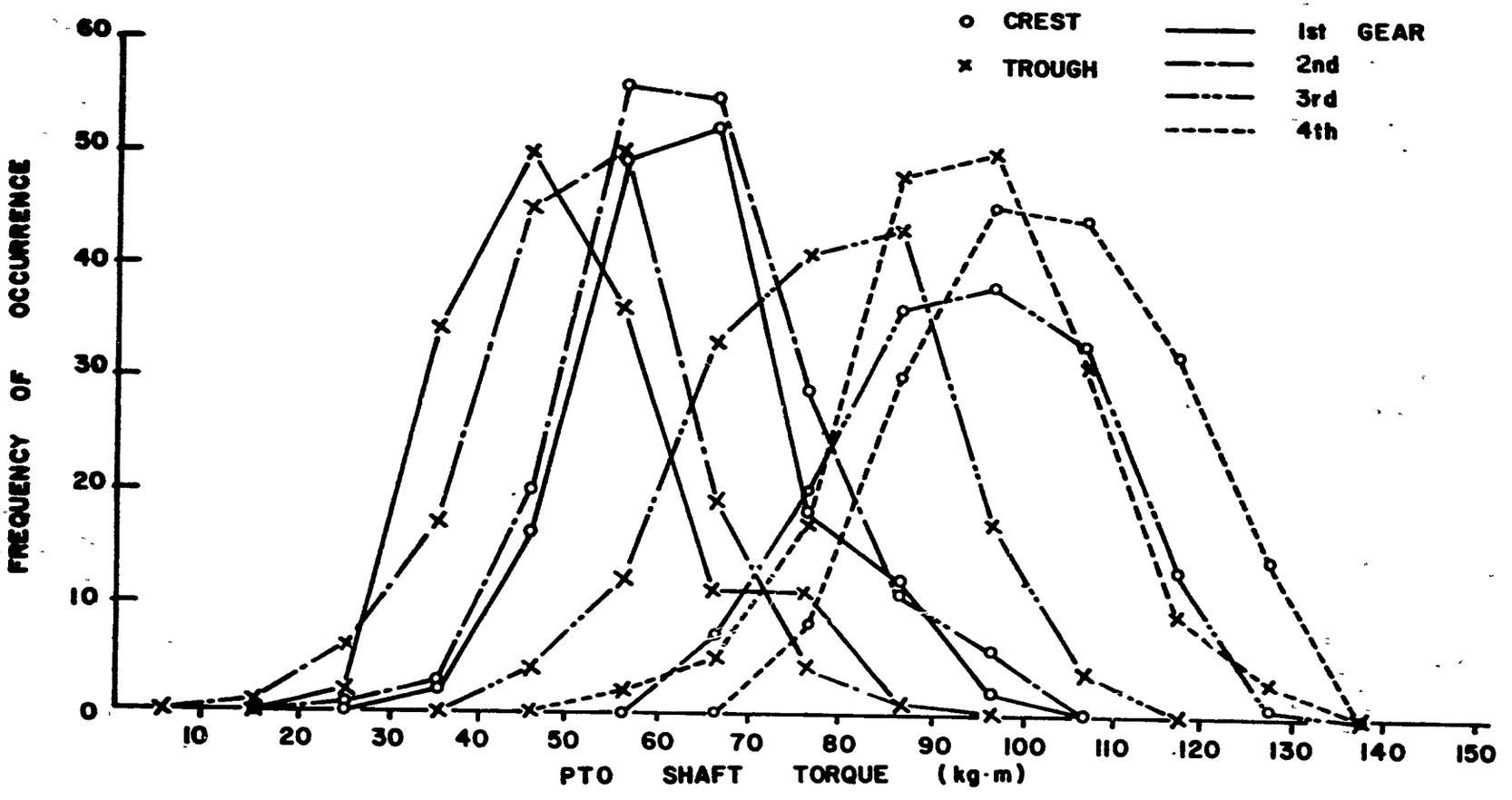

Fig. 14 Frequency distribution curve, upland.

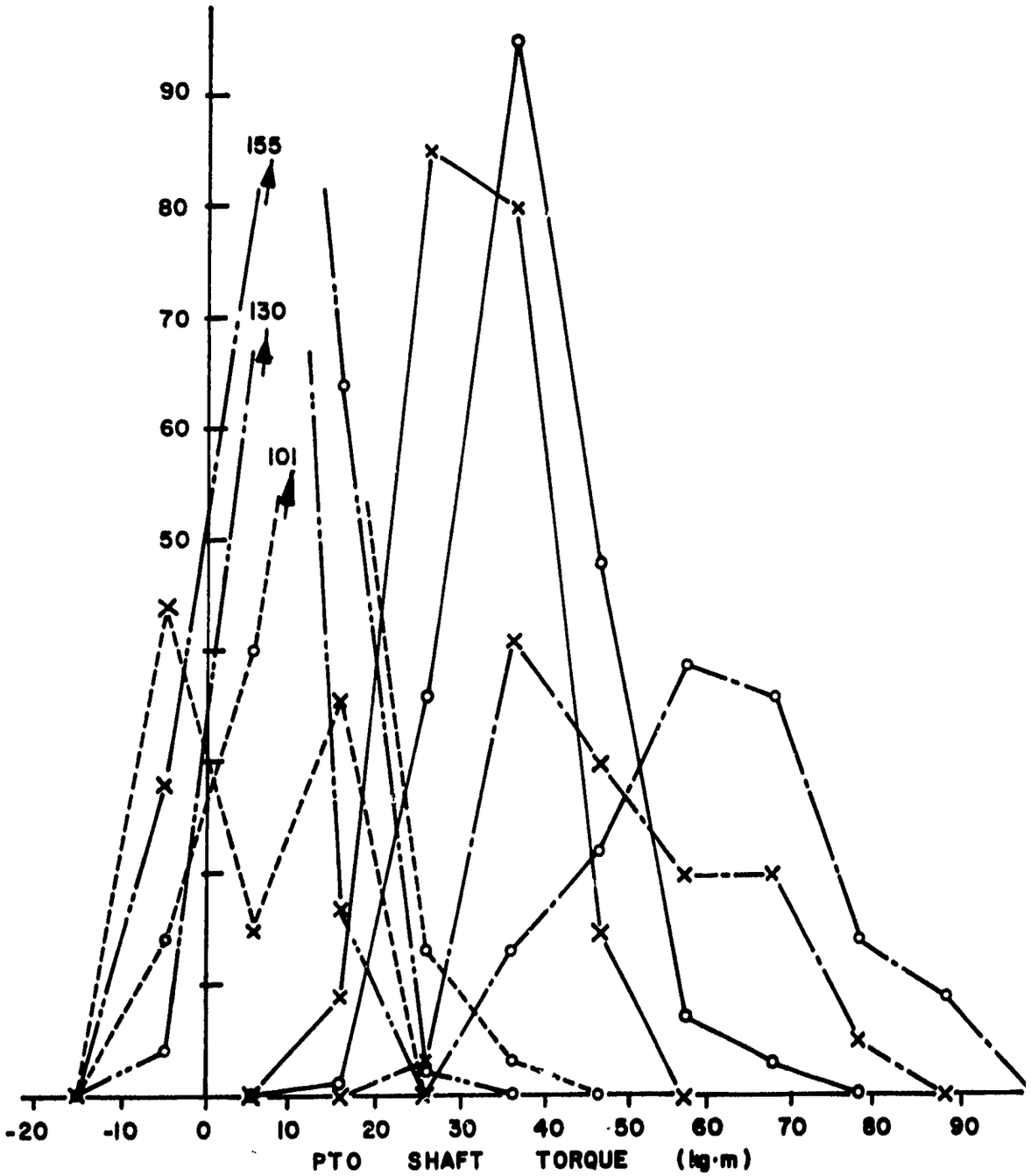

Fig. 15 Frequency distribution curve, lowland.

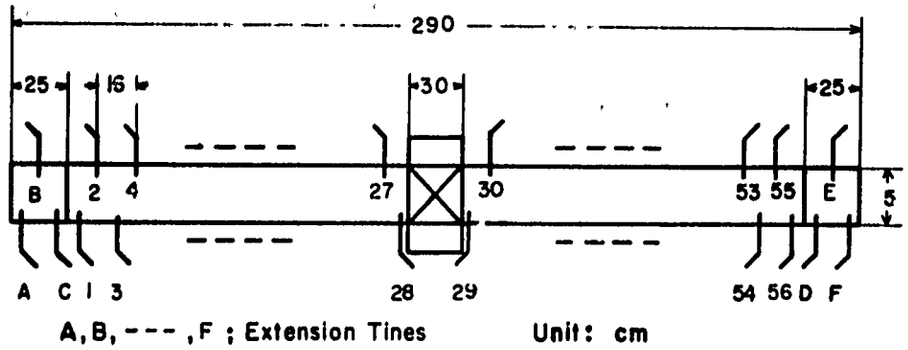

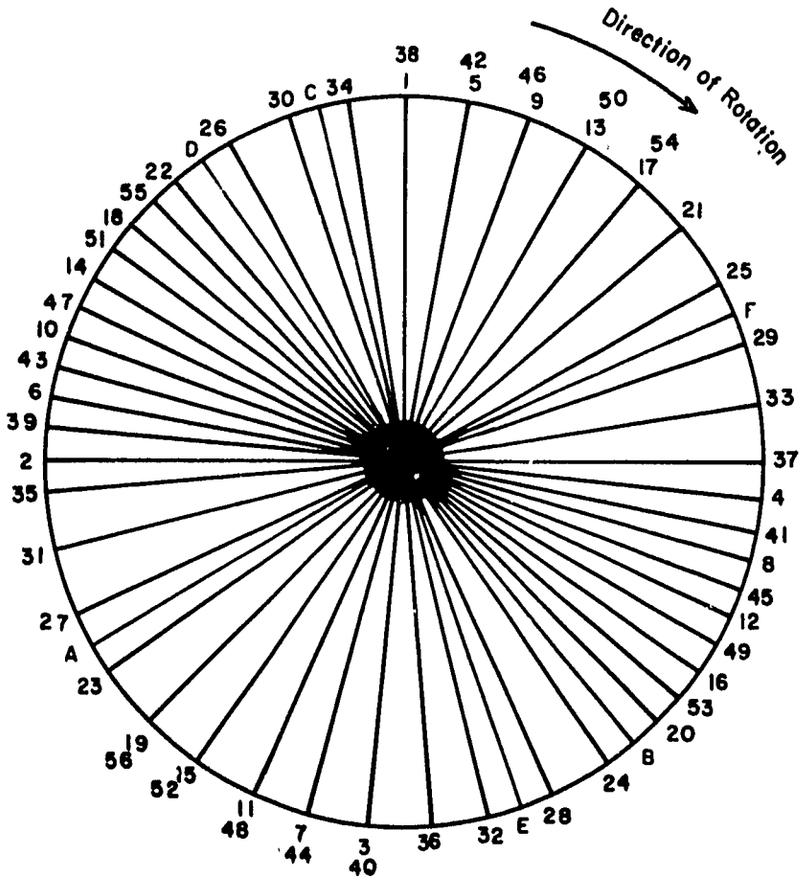

Fig. 16 Specification and arrangement of rotary tines.

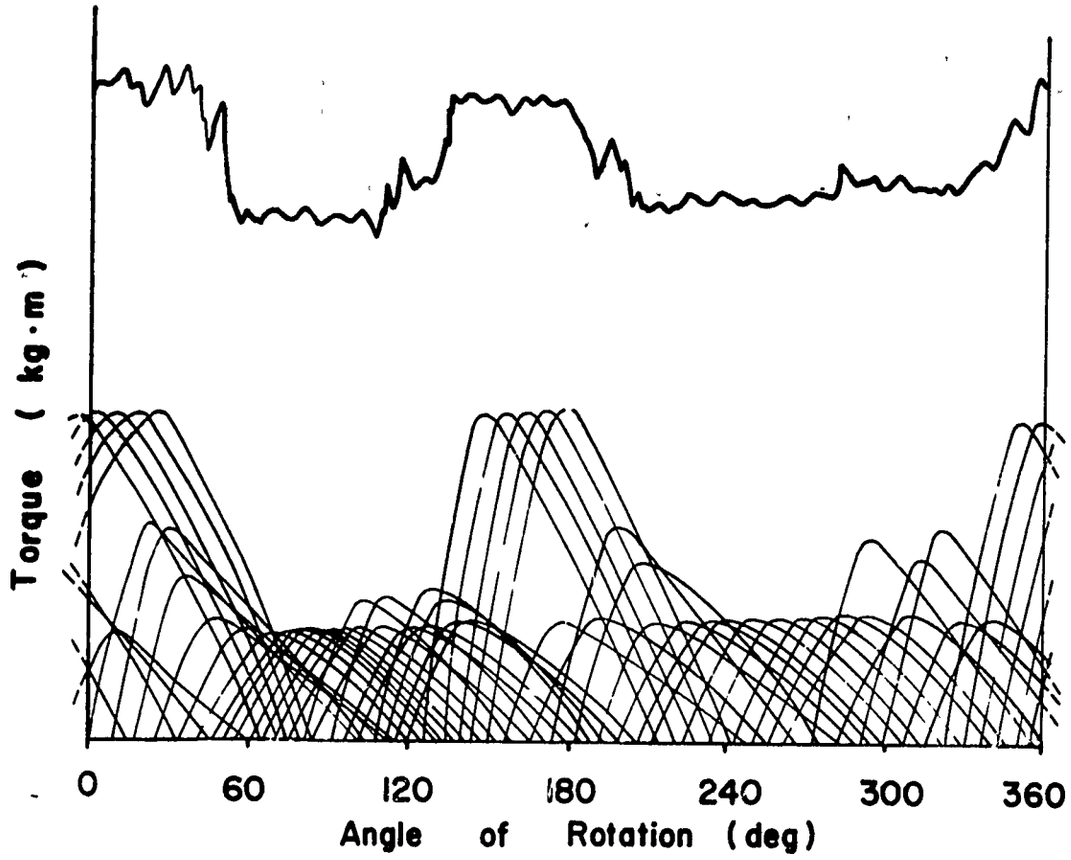

Fig. 17 Estimated torque distribution and summed torque.

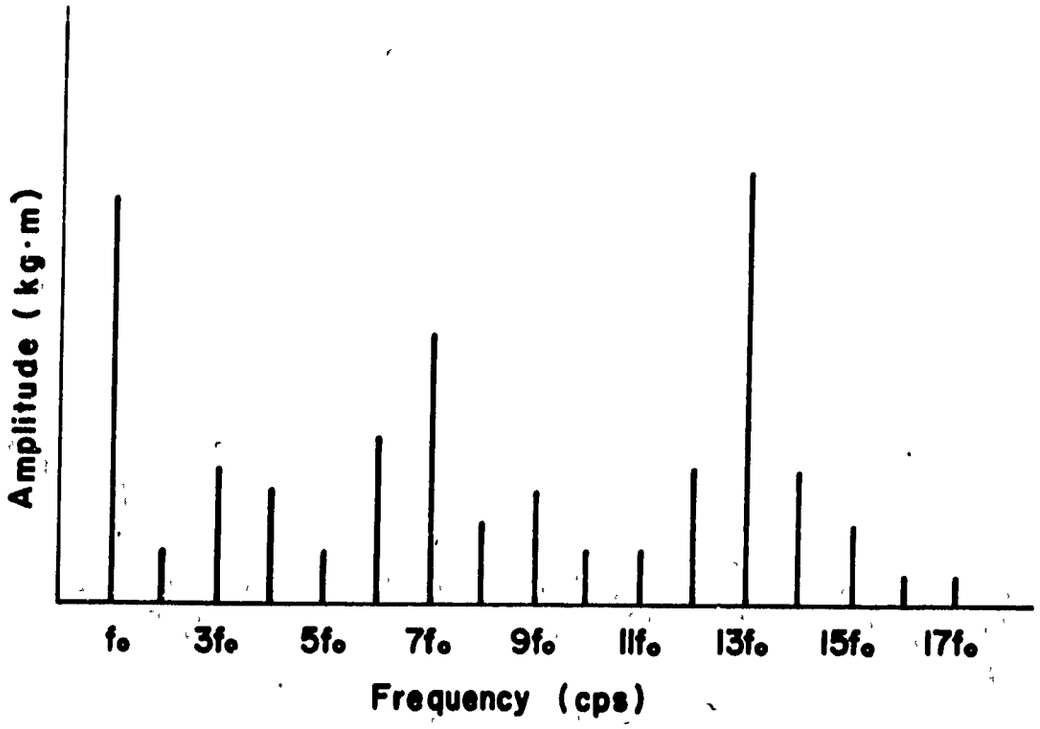

Fig. 18 Line spectrum of estimated rotary torque wave.

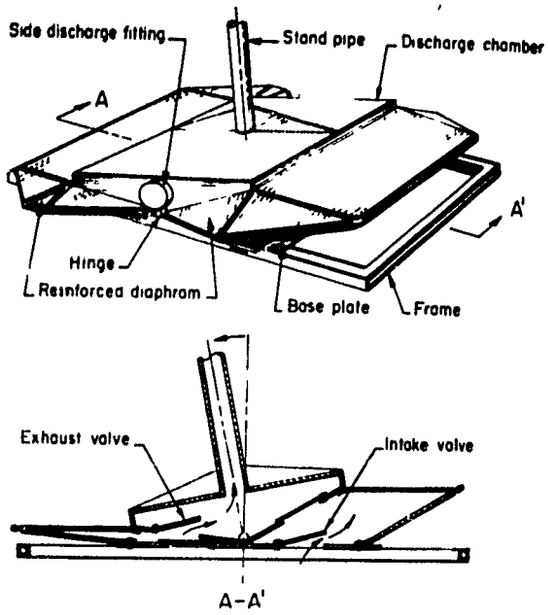

Fig. 19 Manual submersible sump pump.

Fig. 20 Prototype of manually operated grain cleaner.

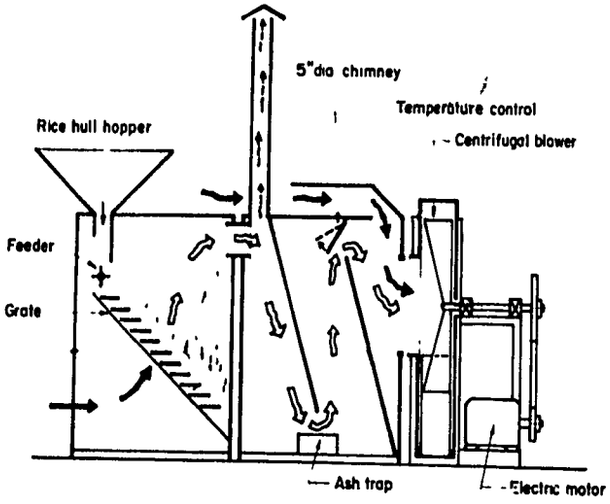

Fig. 21 Schematic diagram of rice hull furnace.

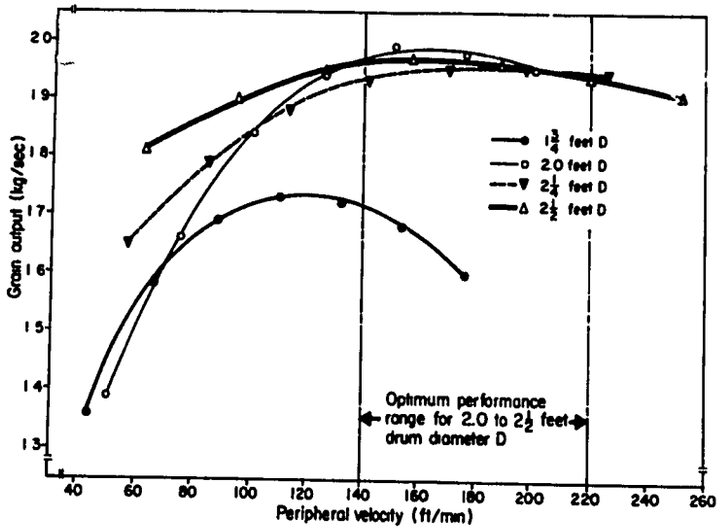

Fig. 22 Effect of peripheral velocity on output for 3/8 in. size screen of different drum diameters.

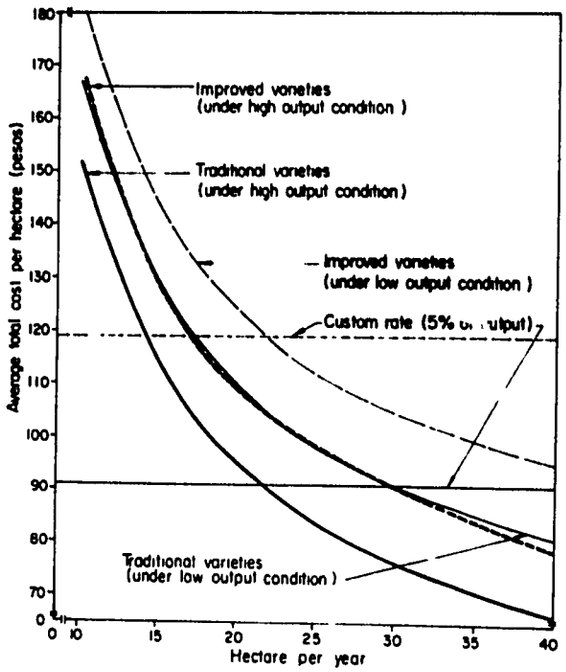

Fig. 23 Average cost of the table thresher as affected by output.

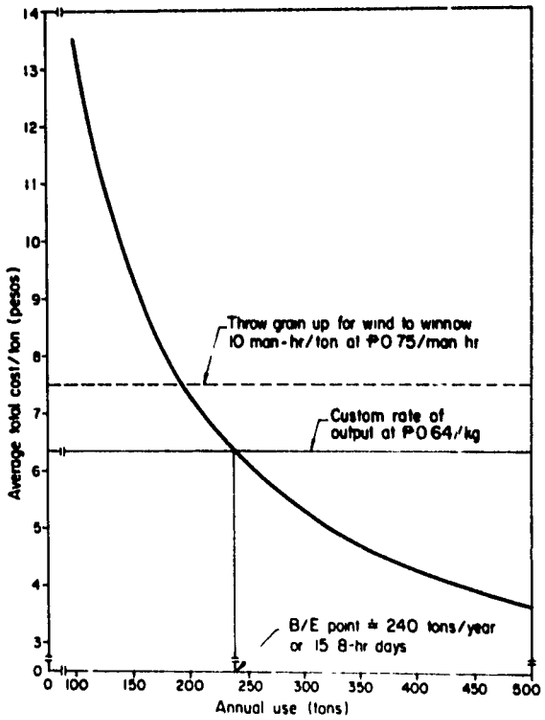

Fig. 24 Relationship between aver cost and annual utilization of the power grain cleaner.

Rep III	S_3 W_7	S_2 W_3	S_2 W_1
	S_2 W_7	S_1 W_9	S_1 W_2
	S_1 W_0	S_1 W_1	S_2 W_2
	S_2 W_5	S_1 W_7	S_1 W_4
	S_3 W_8	S_2 W_8	S_2 W_6
	S_2 W_0	S_1 W_6	S_2 W_9
	S_2 W_4	S_1 W_3	S_3 W_0
Rep II	S_3 W_9	S_1 W_5	S_1 W_8
	S_2 W_5	S_1 W_4	S_2 W_6
	S_1 W_8	S_2 W_2	S_3 W
	S_1 W_2	S_1 W_5	S_1 W_1
	S_3 W_0	S_2 W_8	S_2 W_7
	S_1 W_6	S_2 W_1	S_1 W_7
	S_2 W_9	S_2 W_3	S_2 W_0
	S_1 W_0	S_1 W_3	S_3 W_9
	S_1 W_9	S_3 W_8	S_2 W_4
Rep I	S_3 W_9	S_2 W_8	S_1 W_9
	S_3 W_8	S_2 W_3	S_2 W_0
	S_2 W_1	S_1 W_0	S_2 W_5
	S_1 W_1	S_1 W_6	S_2 W_6
	S_3 W_7	S_1 W_4	S_2 W_2
	S_3 W_0	S_1 W_8	S_1 W_5
	S_2 W_7	S_2 W_9	S_1 W_7
	S_2 W_4	S_1 W_2	S_1 W_3

Seeding method
S_1 = Mechanical seeder
S_2 = Transplant
S_3 = Broadcast

Weeding method
A Hand weed
W_1 = 28 DAS ♦
W_2 = 28 & 42 DAS
B Rotary weeder
W_3 = 28 DAS
W_4 = 28 & 42 DAS
C Power weeder
W_5 = 28 DAS
W_6 = 28 & 42 DAS
D Herbicide (granular)
W_7 = Saturn at 15 kg a.i./ha ♦♦
W_8 = Machete at 15 kg a.i./ha
W_9 = C-285 at 10 kg a.i./ha

♦ Days after seeding
♦♦ Active ingredient

Fig. 25 Field layout of seeding-weeding experiment.

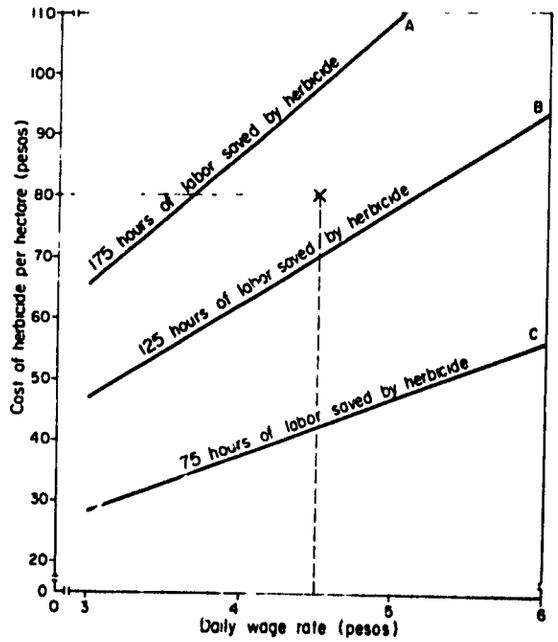

Fig. 26 Price map for herbicide vs handweeding.