AGENCY FOR INTERNATIONAL DEVELOPMENT
WASHINGTON, D. C. 20523

BIBLIOGRAPHIC INPUT SHEET

FOR AID USE ONLY
BATCH #28

1. SUBJECT CLASSIFICATION

A. PRIMARY: Agriculture — AN20-0000-0000

B. SECONDARY: Farm equipment

2. TITLE AND SUBTITLE

Instruction manual: table thresher

3. AUTHOR(S)

(101) IRRI

4. DOCUMENT DATE: 1971

5. NUMBER OF PAGES: 12p.

6. ARC NUMBER: ARC 631.3 I61a

7. REFERENCE ORGANIZATION NAME AND ADDRESS

IRRI

8. SUPPLEMENTARY NOTES *(Sponsoring Organization, Publishers, Availability)*

9. ABSTRACT

10. CONTROL NUMBER

PN-RAB-575

11. PRICE OF DOCUMENT

12. DESCRIPTORS

Education
Manuals
Rice
Small machines
Threshing

13. PROJECT NUMBER

14. CONTRACT NUMBER

CSD-2541 Res.

15. TYPE OF DOCUMENT

AID 590-1 (4-74)

ark 2541-Rice.

Instruction manual
TABLE THRESHER

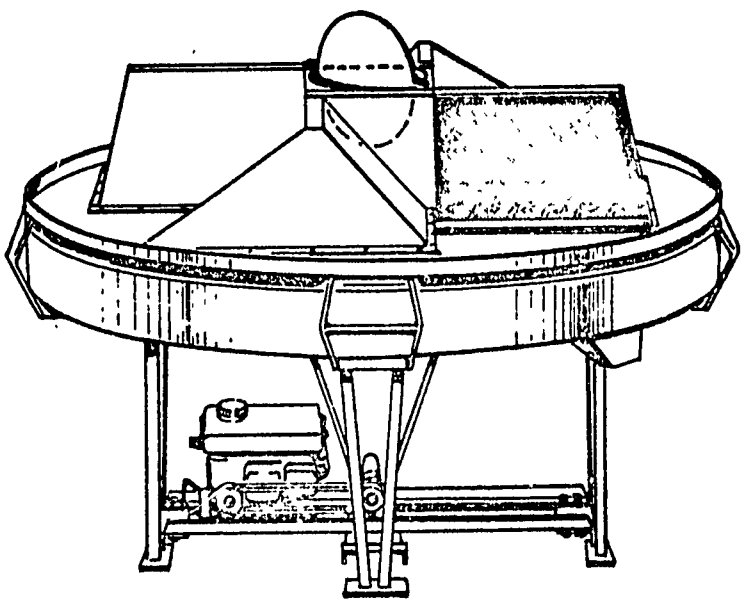

DESIGNED AND DEVELOPED BY:
THE INTERNATIONAL RICE RESEARCH INSTITUTE
Los Baños, Laguna, Philippines
MANUFACTURED BY:

THRESHING rice fast, at the right time, with little waste and at low cost is a major problem in many rice growing countries. The IRRI-developed power table thresher described in this manual is simple, compact, lightweight, and low-cost. It threshes rice and sorghum satisfactorily at a wide range of moisture contents. Other crops have not been tested. The efficiency of the novel circular threshing surface gives the machine a very low power input requirement.

This manual explains how to operate and maintain the thresher. For maximum output plus safe and efficient operation read the instructions thoroughly. Instructions about maintenance and adjustments should be carefully followed.

The manufacturer of your machine may have modified the basic IRRI design. Be sure you are completely familiar with your machine to make sure that maintenance and adjustments are correctly performed.

Table thresher

The table thresher removes the grain from the panicles, mechanically screens the rough rice from the straw, and blows lighter impurities away. The machine performs well with both high-moisture and low-moisture crops.

Threshing is done by a flat circular threshing table on which threshing spikes are mounted. The spikes are arranged in a self-cleaning pattern which moves straw, grain, and trash to the outside of the table. A flat circular screen rotates around the threshing table and separates the grain from the straw. A fan on the underside of the threshing table blows air through the grain and trash which is falling through the revolving circular screen. The air removes lighter impurities.

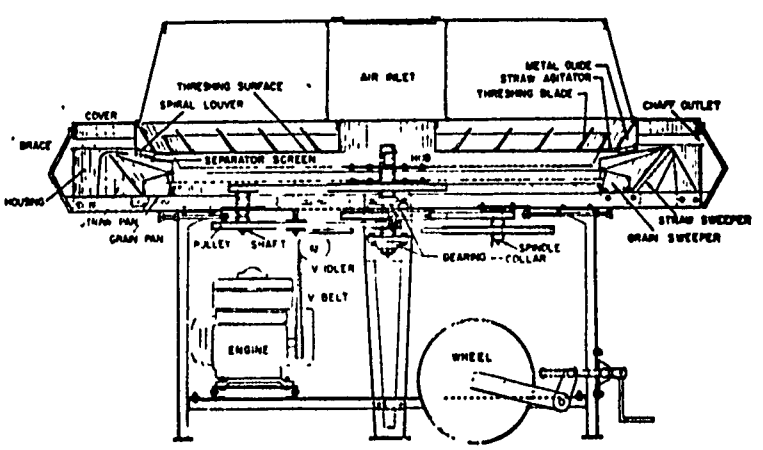

Schematic drawing of the original IRRI prototype table thresher. Manufacturers may incorporate modifications resulting in some deviation from the basic design.

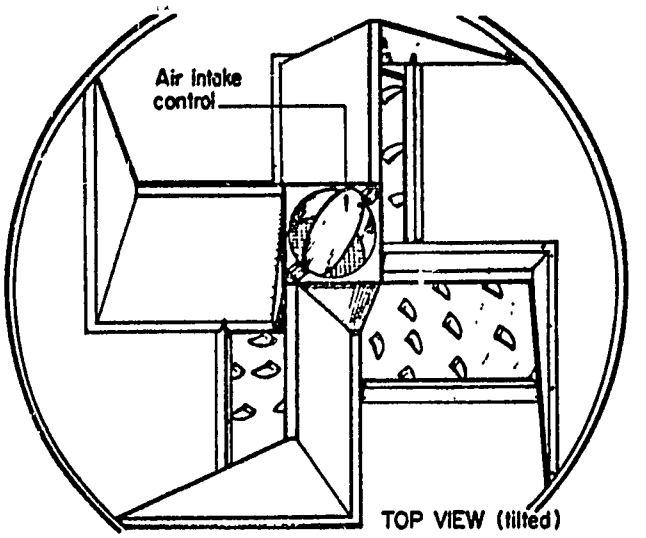

Check the air passage below the air-intake duct to be sure that no accumulated straw interferes with air movement.

Pre-operation checks

- Place the thresher in the field on level ground.
- Lubricate all grease fittings every day before use. (See lubrication instructions, page 8.
- Be sure no foreign materials are in the machine by looking into the machine and moving the threshing table manually. Listen for any unusual sounds indicating trouble in the machine.
- Tighten all loose bolts and nuts. The set screws on all drive pulleys must be tight to ensure proper operation.
- Check belts for proper tension. Tighten and align any loose belts by adjusting the bolts and idlers.
- Check the engine, using the manufacturer's recommendations for oil, fuel, and servicing of the air cleaner. Make sure the air passage around the cylinder block is free from accumulated materials which might restrict airflow.
- Be sure no tools or hard objects are lying near the machine which might be picked up with the unthreshed paddy and fed into the machine.
- Check the air passage below the air-intake duct. Make sure that no accumulated straw interferes with air movement.

Small stacks of unthreshed material should be within easy reach of the operator.

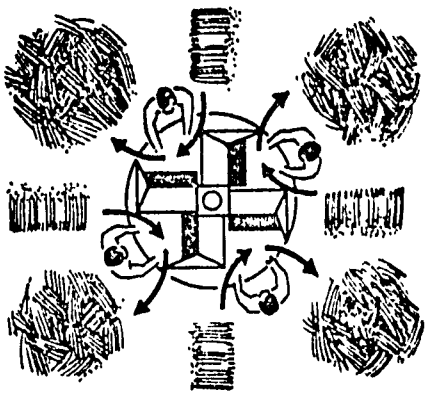

Threshing operations

The thresher can be operated at any level location. But, to reduce grain losses caused by excessive handling, the machine should be taken directly into the field whenever the soil is firm enough. When this is not possible, it may be operated on a roadway, levee, or a level threshing floor. Place the machine so that unthreshed materials are within easy reach of operators feeding each of the four intake openings. Having small stacks immediately adjacent to each opening will allow the operator to work rapidly with a minimum of movement.

To start the engine, first loosen the thumbscrews on the base plate and slide the engine towards the countershaft. This will disengage the drive belt and

Disengaging the drivebelt by loosening the thumbscrews on the base plate makes it easier to crank the engine.

reduce the effort necessary to crank the engine. After starting the engine slowly slide it away from the countershaft until the drive belt is fully engaged and the proper belt tension is achieved. Lock the thumbscrews securely before beginning operation of the machine.

Operators at each of the four intake openings may feed the machine simultaneously. An operator should grasp a bundle of unthreshed material sufficient to fill both hands and extending the panicles into the intake opening until they touch the threshing surface. Maintain a secure hold on the bundle and do not exert excessive pressure on the threshing surface. Repeatedly rotate the material through a 180° arc while in contact with the threshing surface until all grains are removed from

The panicles should touch the threshing surface, but not be forced against it.

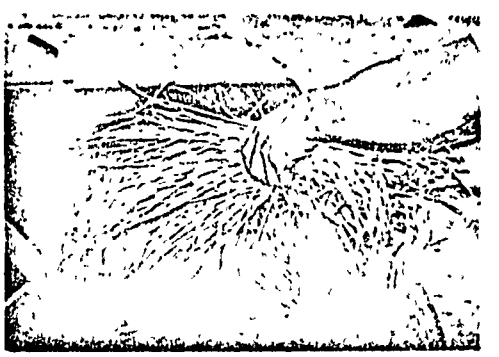

An operator should hold enough unthreshed material to fill both hands.

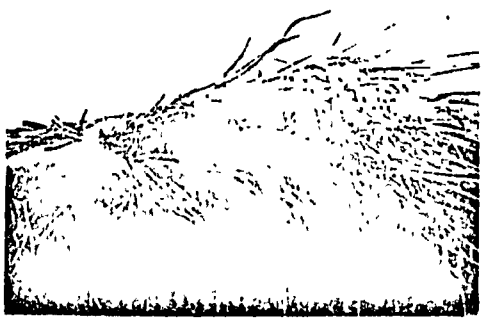

the panicles. Do not feed straw into the thresher because this will reduce the separating and cleaning capacity and may overload the machine.

While operating the machine, use extreme caution to avoid bringing the hands into direct contact with the threshing blades. The feeding platform has a 1-inch triangular safety rail on each intake opening which is designed to maintain a safe distance between the threshing surface and the operator's hands.

Threshed grain is delivered at the discharge spout located on the underside of the machine. Another spout next to the straw ejection point discharges a small amount of grain which has been carried across the screen in the straw. This grain and chaff should be re-cycled through the machine.

A fifth man is required to stack unthreshed materials around the machine and to transfer threshed grain from a collection container into sacks or bulk containers.

The air control baffle regulates the flow of air passing through the threshed grain. Adjust the baffle to control the airflow to minimize the grain that is blown out into the straw.

Safety precautions

- Do not feed materials into the thresher that may damage the threshing spikes.
- During threshing, do not move hands beyond the triangular safety rail.
- Never put hands into or make adjustments on the machine when it is operating.

During threshing, do not move hands beyond the triangular safety rail.

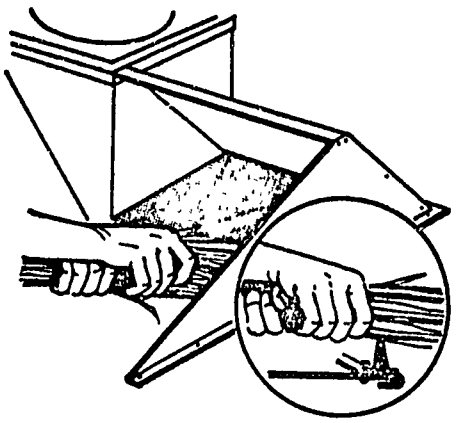

During threshing or any time when the machine is operating never allow hands to come in contact with the threshing surface.

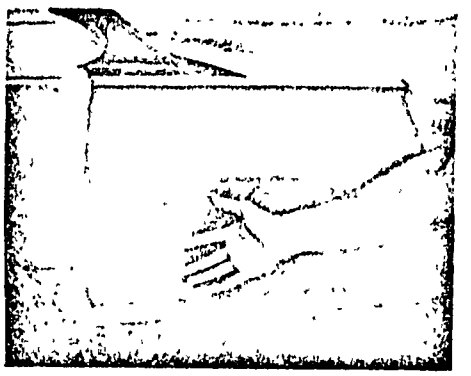

- Do not fill the fuel tank while the engine is running. Make sure that flammable materials (such as gasoline or straw) are kept away from the engine exhaust.
- Never operate the machine when it has loose spikes, nuts, screws, or belts evident.
- When threshing indoors, provide proper ventilation to remove exhaust fumes.

Lubrication

- Lubricate pressure fittings 1-5 on shafts and cleaning-screen frame with a general-purpose grease before operation.
- Follow the manufacturer's recommendations for engine maintenance. Check the engine oil level and air cleaner daily.

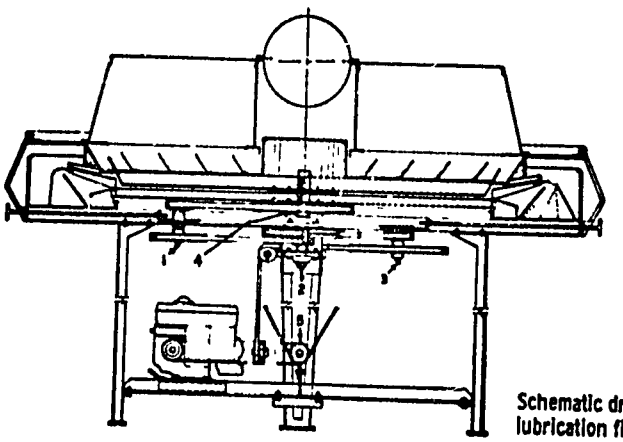

Schematic drawing showing the lubrication fittings.

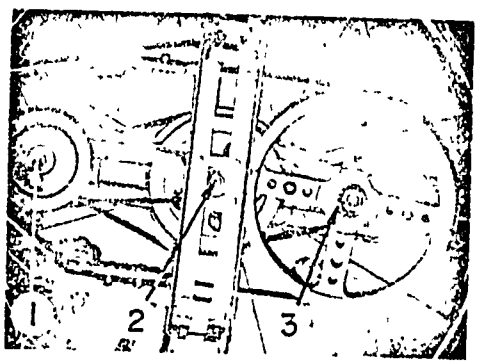

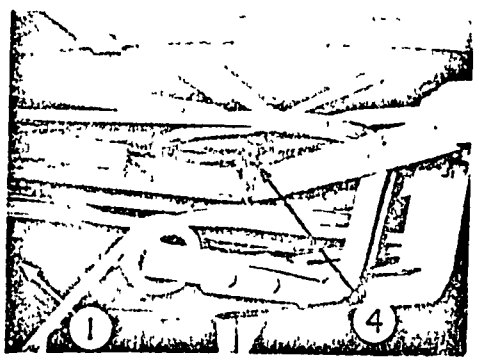

Lubricate all five pressure fittings every day before use.

Storage

- When threshing is complete, clean the threshing machine thoroughly. Remove all straw from the engine air inlet and from the engine cylinder cooling fins.
- Check for damage or worn parts and repair them immediately.
- Rub oil on any unpainted parts.
- Store machine at a covered location.
- For long-term storage, select a location with a minimum of humidity and dust.
- Reduce belt tension by loosening the adjusting screws to minimize deterioration.

Specifications

THRESHER

Weight (kg)	195
Height (cm)	117
Width (cm)	173
Output (kg/hr)	250-350
Table speed (rpm)	215
Screen speed (rpm)	22

ENGINE

Single cylinder, air-cooled, 4 cycle Briggs & Stratton

Weight (kg)	12.5
Horsepower	3.0
Fuel capacity (liters)	2.9
Oil capacity (liters)	0.59
Fuel consumption (liter/hr)	0.85
Normal no-load operating speed (rpm)	3200

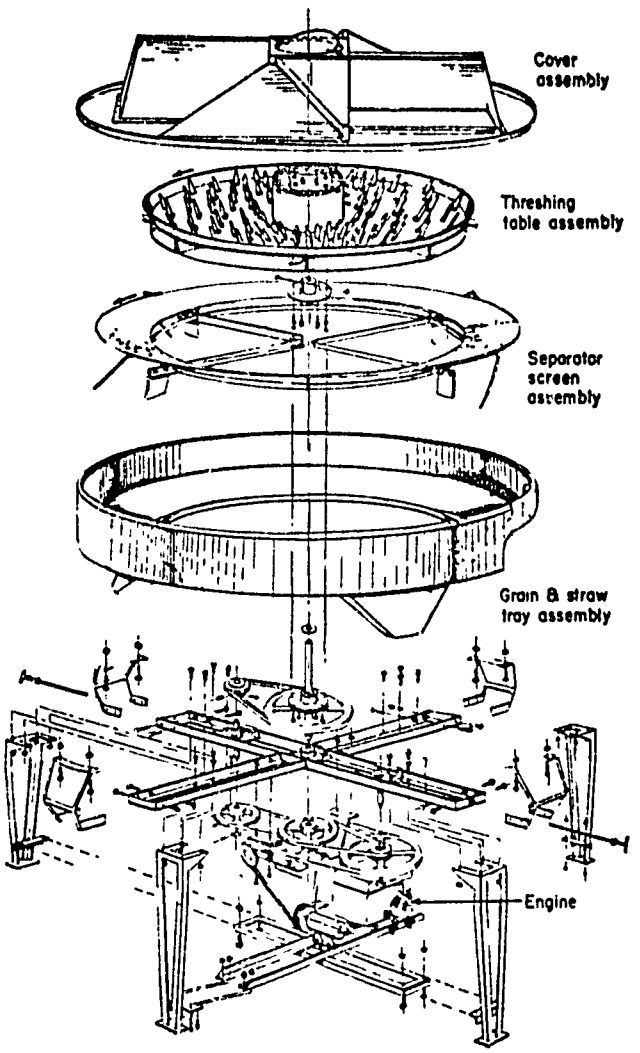

This is the exploded view of the original prototype thresher developed at IRRI. Manufacturers may incorporate modifications resulting in some deviation from the basic design.

Outstanding features

- Excellent threshing efficiency
- Simple operation
- Low power requirements
- Flat threshing surface for high-capacity, multi-feed operation
- Smooth threshing action with little vibration
- Simple construction with only two major moving parts
- Integral threshing surface-air blower
- Adjustable airflow
- Special feeding spouts minimize grain scatter
- Lightweight construction for easy movement
- Wheel options available
- Designed for compact packaging

Design work conducted under IRRIAID Contract No. csd-2541.