AGENCY FOR INTERNATIONAL DEVELOPMENT
WASHINGTON, D. C. 20523

BIBLIOGRAPHIC INPUT SHEET

FOR AID USE ONLY
BATCH #28

1. SUBJECT CLASSIFICATION

A. PRIMARY
Agriculture — AQ10-0150-G570

B. SECONDARY
Food processing--Cereals--Rice--Asia

2. TITLE AND SUBTITLE
Review of storage and processing of rice in Asia

3. AUTHOR(S)
Wimberly, James

4. DOCUMENT DATE	5. NUMBER OF PAGES	3. ARC NUMBER
1972	21p.	ARC

7. REFERENCE ORGANIZATION NAME AND ADDRESS
IRRI

8. SUPPLEMENTARY NOTES *(Sponsoring Organization, Publishers, Availability)*
(In Agr.Eng.Dept. paper no.72-01)

9. ABSTRACT

10. CONTROL NUMBER	11. PRICE OF DOCUMENT
PN-RAB-568	

12. DESCRIPTORS
Drying
Farm storage
Milling
Parboiling?
Threshing

13. PROJECT NUMBER

14. CONTRACT NUMBER
CSD-2541 Res.

15. TYPE OF DOCUMENT

AID 590-1 (4-74)

PAPER NO. 72-01

REVIEW

OF

STORAGE AND PROCESSING OF RICE IN ASIA

by

James Wimberly
Rice Processing Advisor
The Ford Foundation
New York

Prepared for the
Agricultural Engineering Department
International Rice Research Institute
January, 1972

SUMMARY

Throughout Asia, the traditional methods of paddy processing are being replaced with modern techniques and equipment. This paper presents some of the changes and results. It covers: harvesting and threshing, drying, storage, parboiling and milling of paddy. Some of the problems of the traditional systems are discussed along with the results of the modern systems.

AGRICULTURAL ENGINEERING DEPARTMENT
THE INTERNATIONAL RICE RESEARCH INSTITUTE
P.O. BOX 583 • MANILA • PHILIPPINES

Introduction

1. Producing edible rice from field paddy involves several different distinct steps. These are: harvesting and threshing, drying, storage, parboiling (in parts of Asia), and milling.

2. Through laboratory experiments, adaptive research and operation experience in Asia, we have found how the final product is affected by these different steps. The technology, including methods employed, the equipment used, and economics of operation will be discussed in this paper.

I. Harvesting and Threshing

3. Throughout Asia, most paddy is harvested and threshed by hand. The paddy stalk is cut from the stubble and then moved to a threshing floor. The grain is then separated from the straw by hand beating or trampling by bullocks. Only in a few areas are simple mechanical threshers being used.

4. Paddy moisture content at harvest varies with practices. In most areas of Asia, paddy is left standing in the field until it sun-dries. In other areas, it is harvested at 20-25% moisture and stacked until dry before threshing. Still other areas harvest and thresh paddy at relatively high moisture content. Both the harvesting and threshing methods affect the quality and yield of paddy. Each variety of paddy has its individual properties commonly known as "varietal characteristics". This means that varieties may differ from other varieties with respect to harvesting, threshing, drying and milling.

5. Several authors have reported results of harvesting and drying studies. The Rice Process Engineering Center at Kharagpur, India (1)* reports that the optimum harvest moisture content of IR8 was found to be between 21 and 24% (Figure 1). The average field yield at this moisture level was 6740 kg/ha and was reduced to 5550 kg/ha when the crop was harvested at 15% moisture level. During the sun drying process, the over-mature paddy began to shatter and fall and is lost in the muddy soil. Some of the paddy is consumed by birds and rodents and some is lost in the cutting and transporting. These losses account for the 21.6% reduction in field yield during the field drying, harvesting and threshing process.

6. From this and other reports, it may be summarized that paddy harvested at the optimum moisture level, following maturity, produces more yield per acre than paddy allowed to remain in the field to sun-dry. This provides a larger income to the paddy grower.

7. Experience has also shown that paddy can be harvested and threshed by hand, at relatively high moisture levels, overcoming the traditional prac-

---

*Numbers in parenthesis refer to references at end of paper.

tices of "threshing sun-dry paddy only". The common practice of threshing on a yard or road tends to have excess quantity of dirt, stones, and straw with the paddy. On the other hand, mechanical threshing of paddy produces a cleaner paddy.

8. With the critical labor problem in many areas at harvest time, more emphasis is being placed on the use of mechanical threshers. Both IRRI (2) and Harrington (3) have developed improved paddy threshers for use in the small paddy holdings in Asia.

9. Clean paddy produced from improved harvesting-threshing operations also reduce the drying, storage and handling costs. This, in turn, reduces the overall processing cost.

II. Drying

10. To protect the quality of paddy, it must be dry before storing. Traditionally throughout Asia, it is sun-dried. With the change in cultural practices and paddy harvesting, many farmers and rice traders are mechanically drying paddy. This reduces the sun checking of the grain and the breakage of the rice during milling. Several authors have reported on studies of drying test. Faulkner (4) reports on a drying test at Dokri, West Pakistan:

Test No.	Drying Method	Rice Recovery %*	
		Head	Total
1	Open sun	21.3	45.7
2	Thatched hut with open sides	41.4	62.6
3	In closed room	52.7	71.3

11. This illustrates the large difference in milling yield obtained between methods of drying and the advantage of controlled drying over sun-drying. The Rice Process Engineering Center (1) reports:

Variety	Drying Method	Rice Recovery %	
		Head	Total
ADT-27	Sun	66.2	70.0
"	Mechanical	72.8	73.4
IR8	Sun	42.4	71.9
"	Mechanical	59.6	72.6
CO-25	Sun	40.7	71.8
"	Mechanical	62.3	75.0

*Rice recovery, often referred to as rice outturn, is the percent of rice from the paddy milled. Head rice is grains which are 3/4 in size or larger. Total rice includes brokens and head rice.

12. This illustrates the increase in head yield and total rice yield of mechanically dried paddy over sun dried paddy. This study also confirms the varietal differences in drying of paddy.

13. From the same test, the IR8 paddy harvested at the optimum moisture level and mechanically dried gave a total rice recovery of 4940 kg/ha. The IR8 paddy which was sun dried gave only 2320 kg/ha of rice recovery. This difference, using current paddy prices in India, is worth Rs. 800 ($107)* per ha. This economic advantage of early paddy harvest and mechanical drying could be a gain to both the grower and the rice miller.

14. The use of mechanical drying of paddy has other advantages. It provides the facilities for harvest and drying during monsoon and rainy seasons. The farmer can also harvest his paddy 10 to 16 days earlier, which would greatly assist the double-cropping programs.

15. Mechanical drying of paddy in Asia is being conducted at both the farmer level and the commercial level. The small farmer or village operations consist of bin or batch drying equipment. The larger commercial drying is being done with the multi-pass continuous-flow type dryers.

16. Small one- to two-ton batch dryers are being built at the farm level. These are constructed of inexpensive locally available materials. They are equipped with a small blower and burner. Some use electric power, others use gasoline engines. The most common fuel is kerosene and diesel oil (Fig. 2). Where paddy husk is available to the farmer, it may be used as a source of fuel (5). Air flow rates of 10 to 35 cfm/cu ft of paddy have been used with the small batch dryers. Generally air temperature is maintained at 110 to 115°F. With these air flow rates and air temperature, drying one ton of paddy may vary from 4 to 8 hours. Kerosene fuel cost to reduce the paddy moisture from 24% to 14% is approximately 80 cents per ton of paddy. Other cost, including depreciation, interest, maintenance and labor to operate the dryer, may bring the total drying cost to $1.50 to $2.00 per ton of paddy.

17. Small commercial dryers have been used, such as the round bin dryers (Fig. 3). This type of dryer is available in sizes of 5 tons to larger units of 50 and 100 tons capacity. The re-circulating batch dryer of 2 to 5 ton capacity has been used in some areas (Fig. 4), but is generally more expensive to the Asian farmer.

18. Other types of dryers are being studied by different groups in an attempt to find a more economical dryer. IRRI (6) reports on rapid conduction drying with heated sand, and direct flame exposure which may prove to be practical. Louisiana State University (7) reports that the use of infra-red preheat dryers reduce the total drying time by 60 to 80%. When these new ideas are developed for field operation, they will provide new dimensions to paddy drying in Asia.

---

*Indian Rupees: 7.5 Rs. = $1.00.

19. On the commercial scale, at the storage centers and rice mills larger continuous flow dryers have been successfully used. A large number of LSU type dryers are now being used in south India. These dryers, complete with conveying equipment, tempering bins, and storage facilities, provide high-capacity drying of up to several hundred tons per day (Fig. 5). Using these dryers for field paddy, an average moisture reduction of 2% per pass is obtained with air temperatures of 160-170°F.

20. The same LSU-type dryer is being used for drying parboiled paddy. Due to the high moisture of parboiled paddy (36%) and the small batches, the paddy is re-circulated in the dryer for 2 hours before tempering. After 8 to 12 hours of tempering it is again re-circulated for 1.5 hours till dry. Higher air temperature of 190°F have been used for parboiled paddy.

21. Rao from the RPEC at Kharagpur, India reports the drying cost for field paddy ranges from Rs. 5.67 - 10.35 ($0.75-1.38) per ton of paddy. Other experiences with the LSU dryers in south India show drying cost up to Rs. 12.00 ($1.60) per ton of paddy. For drying parboiled paddy, the cost is Rs. 16.00 ($2.13) per ton due to the large drying requirements of parboiled paddy.

22. In order to obtain the benefits of mechanical drying of paddy, many changes in the traditional harvesting and drying process are required. First, the farmer must learn to harvest his paddy immediately after maturity at a high moisture level. Paddy must then move immediately to the drying equipment. The rice miller or trader or farmer must learn how to operate the drying equipment. Experience in south India has also shown that a transport and procurement system must be coordinated with a commercial dryer in order to operate it on an economical basis.

III. Storage

23. In most of Asia the farmer markets his surplus paddy crop soon after harvest. The paddy is bagged in gunny sacks and moved to various storage facilities, ranging from mud huts to large commercial warehouses.* During this storage process, little attention is given to "keeping quality". Often the stored paddy is infested with insects, mold growth, or rodents. Moisture, birds and pilferage cause other losses. Losses of 5 to 10% of paddy in storage were reported by the Asian Productivity Organization (8).

24. To safely store paddy, it first must be free of insects, mold growth, and be clean and dry. The storage structures must be designed and built to maintain quality and quantity during the storage period.

25. Throughout Asia, new improved storage structures are being built. These consist of improved godowns and silos (Fig. 6 & 7). The godowns are usually built with the floor well above ground level, moisture proof, rodent proof,

---

*Commonly referred to as "godowns" in many parts of Asia.

and equipped for fumigation. The paddy is still stored in the gunny sacks, stacked in the godown, and has a large labor requirement for stacking and removing the gunnies.

26. Silos are being used for bulk storage. They are equipped with mechanical conveying equipment. In these silos, the paddy can be safely stored, and easily aerated or fumigated. Losses due to insects, rodents, birds, or pilferage are negligible. Silos can be constructed to almost any required capacity. Reinforced concrete and pre-fabricated steel silos are generally the least expensive building material.

27. With bulk storage, aeration and temperature measurement equipment must be provided. Aeration (9) reduces grain temperatures following drying, assists in equalizing grain temperature, and is used to remove unpleasant odors or toxic gases after fumigation. The air flow rates for aeration are in the order of 0.1 cubic meter of air per minute per ton of grain. The temperature detection equipment consists of thermocouples suspended at regular intervals in the grain mass. An instrument outside the silo indicates the "grain temperature". This system provides daily checks on the condition of the grain. Changes can be detected and fumigation used as needed.

28. Building cost and operation cost of storage system vary considerably, depending on a number of items. The local construction cost, the imported or local fabricated steel bins are primary factors. Labor wages, staff salaries, power cost, interest rates and gunny sacks cost affect storage operation cost.

29. Construction of warehouses cost $20 to $30 per ton of storage capacity. Operation cost is high due to the cost of gunny sacks and labor to move the gunnies. Construction of silos in India cost Rs. 150 ($20) per ton of storage capacity for flat bottom and Rs. 225 ($30) per ton for hopper bottom silos. This includes the cost of handling equipment with the storage installation. Since gunny bags are not used and labor is replaced with mechanical handling equipment the silo operation cost is usually less than warehouse operation cost.

30. An example of a recent study for a storage installation in West Bengal, India for 4000 tons is:

a. Investment cost for silos at Rs. 220 per ton	Rs. 880,000
b. Investment cost for warehouse at Rs. 170 per ton	Rs. 680,000

(over)

--- Operation Cost ---

	Silos	Godowns
1. Staff salaries	Rs. 7,200	Rs. 7,200
2. Labor wages	-----	8,000
3. Electricity	2,400	1,200
4. Maintenance	8,800	13,600
5. Depreciation	17,600	20,400
6. Interest	66,000	51,000
7. Gunny bags	-----	22,890
	Rs. 102,000	Rs. 124,290
8. Storage cost per ton per month	Rs. 2.12 ($0.29)*	Rs. 2.59 ($0.35)

*7.5 Rs. = $1.

31. This study reflects the high cost of maintenance on warehouse normally constructed in Asia and the additional cost of gunny bags and the labor to move them. This does not take into consideration any storage losses of paddy. It is expected that the warehouse installation will incur losses of 2-5% above any losses in the silos. This would account for even a greater advantage of silo storage over gunny bag storage.

32. The selection and final design of any storage structure will depend on:

1. labor to be used
2. cost of local building materials, and cost of construction
3. cost of power for operation
4. cost of gunny bags
5. cost of land
6. cost of management.

33. Dr. Pingale (10) also reports: "It is suggested that storage not be considered in isolation but along with other problems related to post-harvest of paddy. These are mainly marketing, quality assessment, transport, and then storage."

IV. Parboiling

34. Approximately 40% of the marketable paddy production in India is parboiled. Paddy is also parboiled in some other Asian countries on a limited scale, mainly Ceylon, Pakistan, Thailand, Burma, and Bangladesh. The consumption of parboiled rice is an "eating habit" by those people. Parboiling was first encouraged since the process yields an increase in head rice and total rice recovery. It is a process of soaking and steaming the paddy before

milling. The Central Food Technology Research Institute reports (11), "Parboiling gelatinizes the starch and thus solidifies the fractures in the rice grain. Breakage of the grain during milling is minimized. The head rice yield is increased by 5-10% and total rice yield by 1 %".

35. The traditional methods of parboiling consist of soaking the paddy for 2 to 4 days, then boiling it for short periods of time. Different types and sizes of soaking tanks and steaming kettles have been used. India and Ceylon use some concrete tanks for soaking and steel kettles for boiling or steaming. Pakistan uses a clay pot, called "chatti", holding ½ maund (41 pounds) of paddy. After the chatti is filled with paddy and water, husk is burned around the chatti to increase the water temperature, thus decreasing the soaking time. Each of these methods employ a large labor force for the handling of paddy during parboiling and then for sun drying after it is parboiled. Where cold water soaking is practiced, the paddy begins to ferment and produces a disagreeable odor and color in the rice.

36. The CFTRI in Mysore, India, developed a process which employs 2 to 3 hour soaking in hot water (60-70°C) and then passing live steam through the paddy for 10 to 20 minutes. This method is now being used by a number of rice millers in India. The equipment for this modern method consist of a parboiling tank (Fig. 8) with hot water supply and steam connections. The soaking water is re-circulated with a water pump and is kept hot by a hot water tank, where a steam heat exchanger is used to heat the water. After soaking and steaming, the water is drained and the paddy is removed for drying. The paddy contains 35% moisture and must be dried to 14% before milling. The tanks may be built in various sizes and number depending on the desired parboiling capacity (Fig. 9). This process produces a uniform high quality parboiled paddy. Variations in the degree of parboiling or the appearance of the paddy is achieved by varying the time of soaking and steaming (11).

37. Most of the modern parboiling plants are using mechanical drying systems. This has reduced drying cost and permitted continuous operation, not dependent on sun or other weather conditions. The mechanical dryer being used in India is an LSU continuous-flow type. The parboiled paddy is continuously re-circulated through the dryer for approximately 2 hours during which time the moisture is reduced to 20%. After tempering the paddy, it is again re-circulated in the dryer for approximately 1.5 hours, and the moisture is reduced to 14% for milling.

38. Husk-fired boilers are used with most parboiling systems. Husk is available from the rice mill at very little or no cost and is a good source of fuel. The boilers in turn supplies all the steam and hot water for the parboiling process. Steam heat exchangers are sometimes used as a source of heat for the paddy dryer. This reduces the fuel cost of operating a dryer for parboiled paddy but requires a higher investment to insure a more efficient boiler and steam heat exchanger. The steam requirements for parboiling is approximately 200 kilograms steam per ton of paddy. Therefore a 48-ton per day parboiling plant (to match a 2 TPH rice mill) requires 9600 kg of steam per day. If the parboiling is to be completed in 12 hours of operation,

the boiler requirement is 800 kg per hour. If husk is to be used for drying also, the boiler requirement increases considerably, depending upon the efficiency of the steam heat exchanger and the boiler.

39. This modern method of parboiling, using open top tanks, where the paddy is soaked in hot water for 3 hours and steamed for 30 minutes in the same tank, appears to be one of the most practical and economical methods of parboiling. It is capable of producing a uniform parboiled product with the minimum of investment and operation cost.

V. Milling

40. Milling of paddy consist of removing the husk and outer bran layer to produce an acceptable polished rice. Several stages of operation are involved to accomplish this. They are mainly: cleaning, dehusking, husk aspiration, paddy separation, whitening or polishing, and grading. In some parts of Asia, paddy is still milled by hand pounding. The farmer uses a hand sieve to clean the grain, and then mills the rice by hand pounding. This is a simple method, but much of the paddy is broken during the process and the small brokens are lost with the husk and bran. Hand pounding has a low milling recovery* with a non-uniform degree of milling.

41. The oldest mechanical rice mill is the huller. It is sometimes called Engelbergh or Kiskisan. It is a relatively small unit, with throughput capacity of 250 to 400 kg per hour depending on its size. It requires a large power (15 hp) for operation. In small village mills, the rice milling may be done in one or two passes through the huller. In larger mills, three to five hullers are operated in series. The huller removes the husk and bran in the same operation and mixes them together. This does not provide a good quality bran and the many small brokens are lost with the bran and husk. Depending on paddy varieties and the condition of the paddy, the milling recovery may average 60-63% total rice with a very large percentage of brokens.

42. The next improved rice mill was the disk sheller mill or cone-type mill. This is a unit mill which includes a paddy cleaner, an under-run disk sheller, paddy separator, and cone-type polishers followed by a rice grader. With this rice mill, the husk removed and bran removed are conducted in different machines (Fig. 10). This type rice mill gives a better rice recovery than the huller rice mill. The total rice recovery is usually 66-68% outturn and with fewer brokens, again depending on the paddy variety and the condition of the grain.

43. Today the modern rice mills have been improved so their rice recovery is still higher and the units operate more efficiently. The modern rice mill has replaced the disk sheller with rubber roll shellers, improved the operation of the cleaner, and separators, and offers several types of polish-

---

*Milling recovery or milling yield is the percent of milled rice from the paddy milled.

ing and grading equipment (Fig. 11). The milling recovery is generally 70% total rice with fewer brokens.

44. In the modern rice mill, paddy is passed between the surface of two rubber rollers, turning in opposite directions and at different speeds. The husk is removed from the paddy with the least amount of damage to the paddy grain. Husk is then separated by air aspiration, leaving the de-husked paddy which is called brown rice. Since not all the paddy is dehusked on the first pass, the unhusked paddy is separated and returned for husking. The specific density of dehusked paddy is different from husked paddy and is easy to separate on a gravity type separator.

45. The brown rice (dehusked paddy) is then fed to the whitening machines and polishers. Here the bran layer is removed from the grain, producing a white rice. Two types of whiteners or polishers are commonly used. One is the vertical cone polisher and the other is horizontal abrasive or friction polisher. Both types have worked satisfactory on most all Asian paddy varieties. The "degree of polish" or percent bran removed is easily controlled to meet market demands. The bran is easily separated as it is removed, and is collected to be used for other purposes.

46. The polished rice is then graded. The different size brokens are separated. "Head rice" is rice which is 3/4 in size or larger. Other separations are made as large and small brokens. Different rice markets in Asia demand different quality which is based on degree of milling, percent of brokens, cleanliness, and percent of foreign matter in the rice.

47. In several Asian countries, modern rice mills of ½ ton per hour to 15 ton per hour capacity have been introduced. The Government of India began a pilot demonstration modern rice mill program in 1965. This program established seven units. Each unit included mechanical handling, drying, silo storage, modern parboiling and modern milling. All of the equipment used in this program was manufactured in India except the milling machinery. This was imported from Germany and Japan. The seven pilot rice mills included 1, 2, and 4 ton per hour capacity mills.

48. After the rice mills were completed and in full operation, they were evaluated with the traditional disk sheller and huller rice mill. A summary of the findings is (12):

1. For raw paddy (non-parboiled), the modern mills gave an average overall increase in total rice recovery* of 2.5% over disk sheller type rice mills and 6.6% over huller rice mills. The actual increase varied from 0.8% to 4.4% over disk shellers and 1.8 to 12.6% over hullers.

2. For parboiled paddy, the corresponding increase in

---

*Total rice recovery is total milled rice including head rice and all brokens.

total rice recovery for the modern rice mills averaged 0.8% over the sheller mills and 1.6% over the huller mills. The actual figures varied from 0 to 1.8% over shellers and 0.3 to 2.5% over hullers.

3. For raw paddy the increase in head rice recovery in the modern mills over the disk sheller mills varied from 2.0 to 10.4% with an average of 6.1%. Compared with the huller mills, the increase varied from 6.9 to 24.9% with an average of 15.4%.

4. For parboiled paddy, the increase in head rice recovery over the disk sheller mills varied from 0.8 to 2.7% with an average of 1.6%. The increase over huller mills varied from 2.1 to 8.5% with an average of 4.1%.

49. Several economic comparisons have been made to determine the effect of differences in rice outturn and the investment and operation costs. The following table shows one such comparison.

Cost and Returns of Different Type Rice Mills
(Each mill is 1 ton per hour capacity
and milling 6000 tons annually)

	Modern Mill	Disk Sheller	Huller
Investment Cost[1]	Rs. 90,000 ($ 12,000)	Rs. 65,000 ($ 8,700)	Rs. 22,500 ($ 3,000)
Annual Operation Cost[2]	Rs. 66,400	Rs. 50,400	Rs. 49,200
Paddy Cost[3]	30,00,000	30,00,000	30,00,000
Total Annual Investment	30,66,400	30,50,400	30,49,200
Annual Sales[4]	33,60,000	32,64,000	31,20,000
Annual Returns:	Rs. 2,93,600 ($ 39,147)	Rs. 2,13,600 ($ 28,480)	Rs. 70,800 ($ 9,440)

[1] Indian rupees: Rs. 7.5 = $1.00.

[2] Operation cost includes: power, labor, maintenance, depreciation, and interest. Huller rice mill, Rs. 8.20/ton of paddy; disk sheller rice mill, Rs. 8.40/ton of paddy; and the modern rice mill, Rs. 11.07/ton of paddy (this includes Rs. 16,000 per year for rubber rollers).

[3] Each rice mill, milling 6000 tons of paddy per year at Rs. 500/ton.

[4] Rice sales at Rs. 800/ton of rice. Total milling recovery of modern mill is 70% of sheller mill is 68%, and huller mill is 65%.

50. This comparison is for the rice mill only. It does not reflect the cost or returns of mechanical drying, storage or parboiling. Neither does it reflect the difference in quality of rice outturn, since the market value of rice was fixed price on a Fair Average Quality.

51. From the results of the pilot modern rice mill program in India, and experiences like the one illustrated above, many rice millers are changing from traditional disk sheller and huller rice mills to the modern rubber roll rice mill. Other Asian countries are experiencing similar results to those obtained in India. However, they are not as far along in their programs and have not been able to evaluate their new mills. Several foreign firms have collaborated with local firms in India and are now manufacturing the modern rice machinery in India.

52. From several analysis it appears the larger capacity rice processing plants are more economical and yield a greater return on the investment. This alone should not be the deciding factor on the size of rice mill to recommend. One of the most important considerations is the availability of paddy, the procurement program and the transportation facilities within the operation area. Often it is advisable to locate a number of receiving centers or collection points within the paddy production area. At these points paddy may be collected, weighed, cleaned, sometime dried, before transporting to the plant. It may be practical and economical to locate some drying, and storage facilities at these collection points, and operated under the supervision of the main processing plant, as part of a total system.

VI. Rice Processing System

53. The operation of a modern paddy-rice processing system is a complex industry. It involves: procurement programs, transportation systems, drying, storage, milling facilities, and the rice marketing programs. Careful planning and implementation of policies related to procurement, storage, and marketing programs are essential to a successful processing operation. From the experiences with the modern rice mill program in India, there are three essential parts to the success of the program: (1) modern equipment and methods, (2) trained operators and technicians, and (3) trained management.

54. Modern equipment may be imported or manufactured locally. It is available from several countries in Asia, and the manufacturing competence can be developed in still other countries. The trained operators and technicians, must be planned Resources for training should be carefully considered with any initial planning of the program. This could include in-country training programs and sending personnel to other Asian countries where these facilities have been established. Trained management is required. Any part of this complex industry left to unskilled management or operators, could result in failure to obtain the results possible with a modern processing plant.

55. The planning of a modern rice processing program include detailed planning of the equipment to be used, where it will come from, the training of technical personnel and the management required.

REFERENCES

1. Paddy Harvesting and Drying Studies. Rice Process Engineering Center, Kharagpur, India, March 1970.

2. Semi-Annual Report, Agricultural Engineering Department, The International Rice Research Institute, Los Baños, Philippines, 1970-1971.

3. Harrington, Roy. Thresher Principles Confirmed with a Multi-Crop Thresher, ISAE, Ford Foundation, New Delhi, India, Feb. 1970.

4. Faulkner, M.D. Report on Observations and Recommendations on Rice Handling and Milling in West Pakistan. Ford Foundation, Islamabad, Pakistan, March 1968.

5. Manalo, A. S. Rice Hulls as Fuel for Drying Paddy. Agricultural Engineering Department, IRRI, Los Baños, Philippines. Sept. 1971.

6. Khan, A. U. Mechanization Research for Tropical Agriculture. Paper presented at ASAE Summer Meeting at Minneapolis, Minnessota, July 1970. Agricultural Engineering Dept., IRRI, Los Baños, Philippines.

7. Wratten, F. T. & M. D. Faulkner. A New System for Rice Drying, ASAE. Little Rock, Arkansas, March 1966. Louisiana State University.

8. The Report of the Survey on the Problems of Transportation, Storage and Distribution of Food Grains, Asian Productivity Organization, Tokyo, Japan.

9. Smith, C. V. Meteorology and Grain Storage, Technical Note No. 101, World Meteorological Organization, Geneva, Switzerland, 1969.

10. Pingale, S. V. Prevention of Losses in Storage, Bulletin of Grain Technology, Storage Institute, Hapur, U.P., India.

11. Parboiling of Paddy. Project Circular No. 7 by Central Food Technology Research Institute, Mysore, India.

12. Modernization of Rice Milling Industry, Dept. of Food, Ministry of Food and Agriculture, Government of India, New Delhi, March 1969.

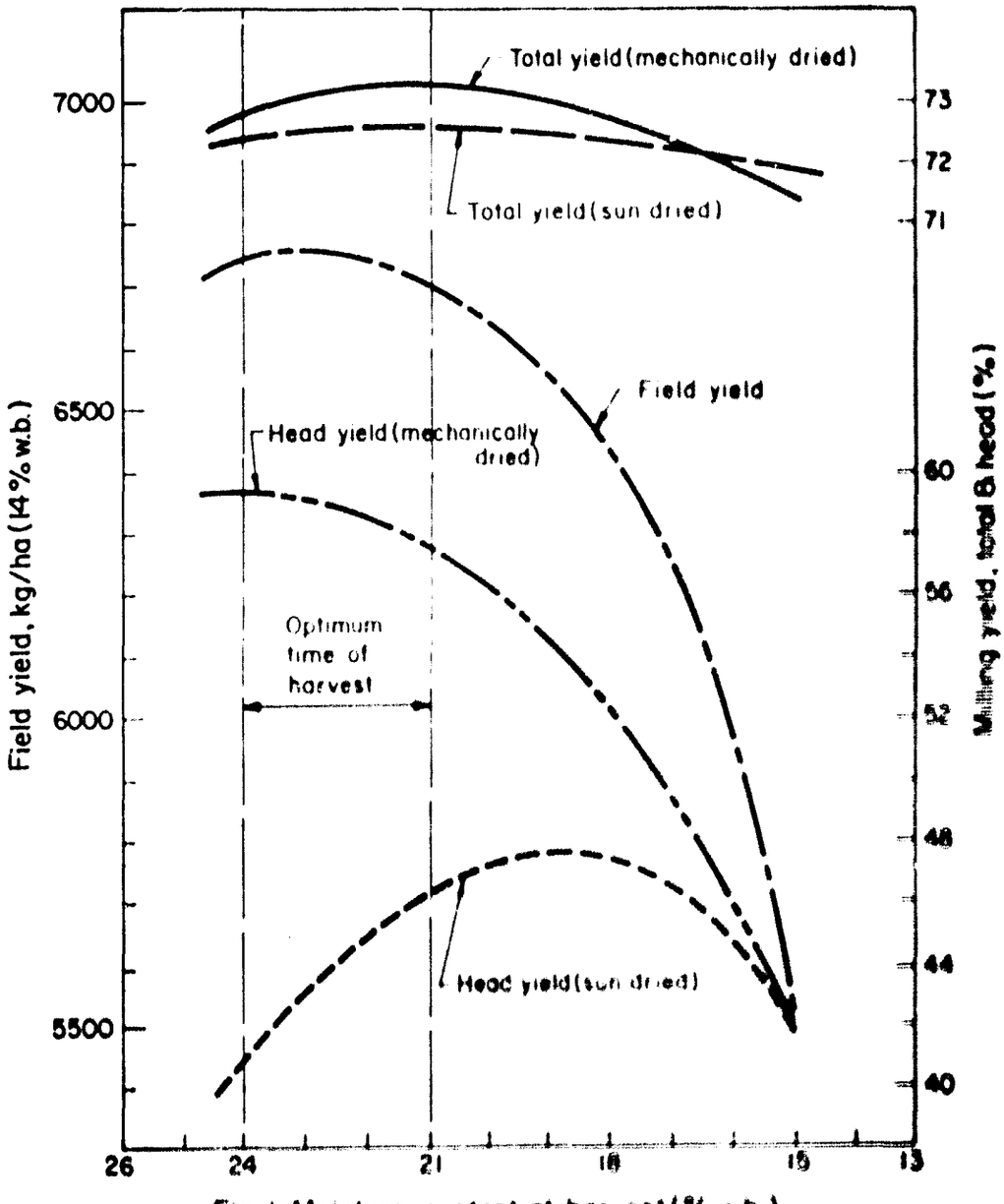

Fig 1 Moisture content at harvest (% w.b.)

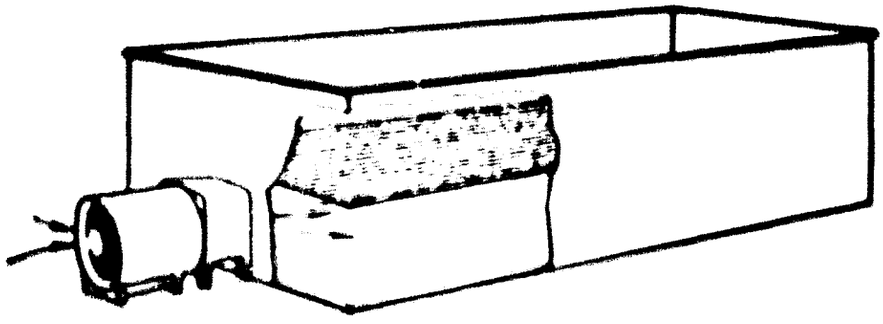

Fig 2 FLAT BED DRYER

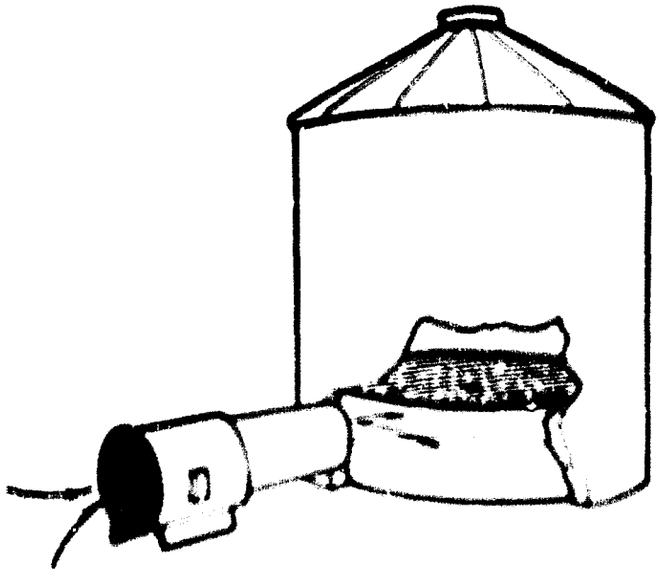

Fig 3 BIN TYPE DRYER

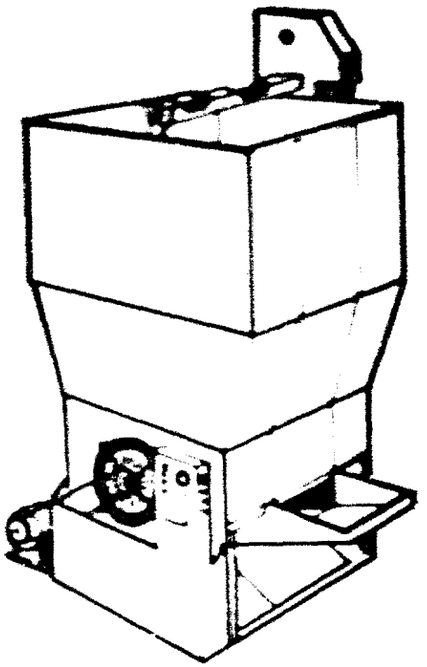

Fig. 4. RECIRCULATING DRYER

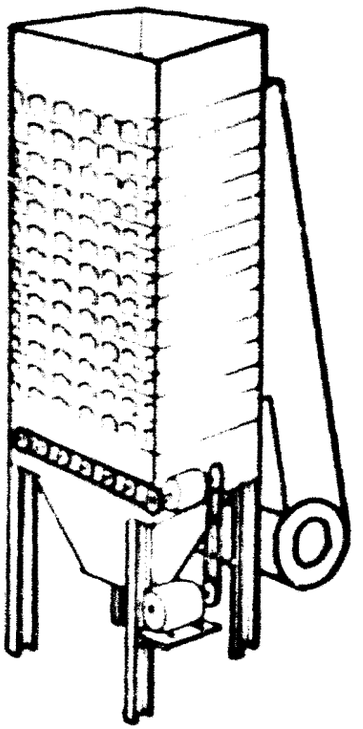

Fig. 5. LSU DRYER

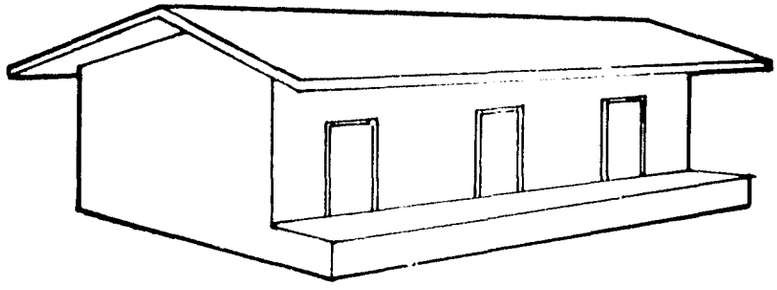

Fig. 6. MODERN GODOWNS FOR STORAGE

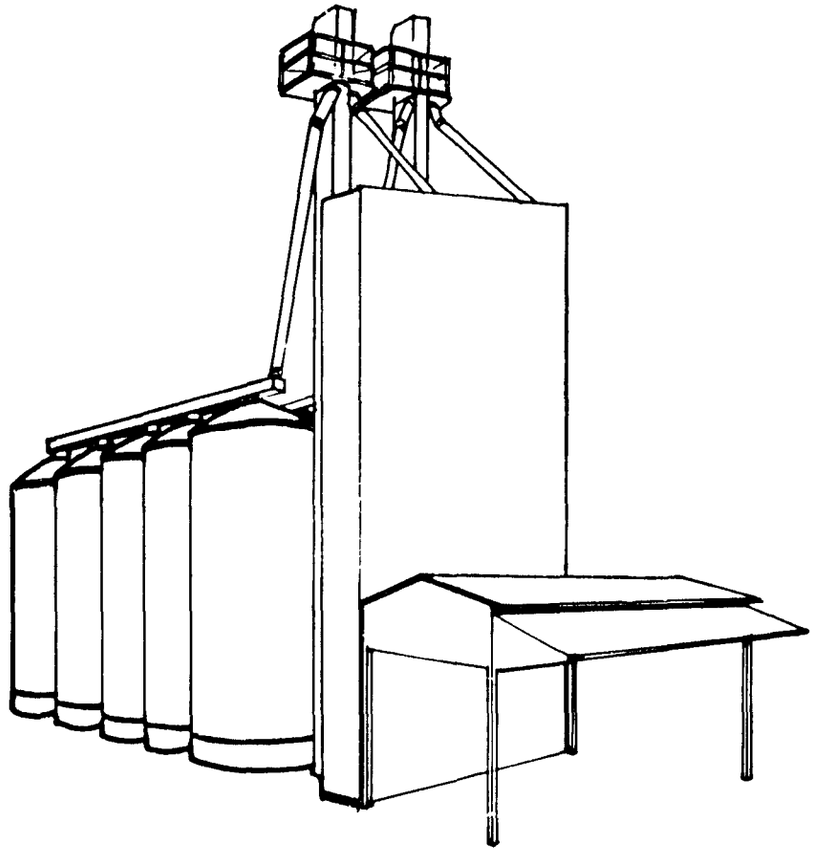

Fig. 7. MODERN SILO PLANT

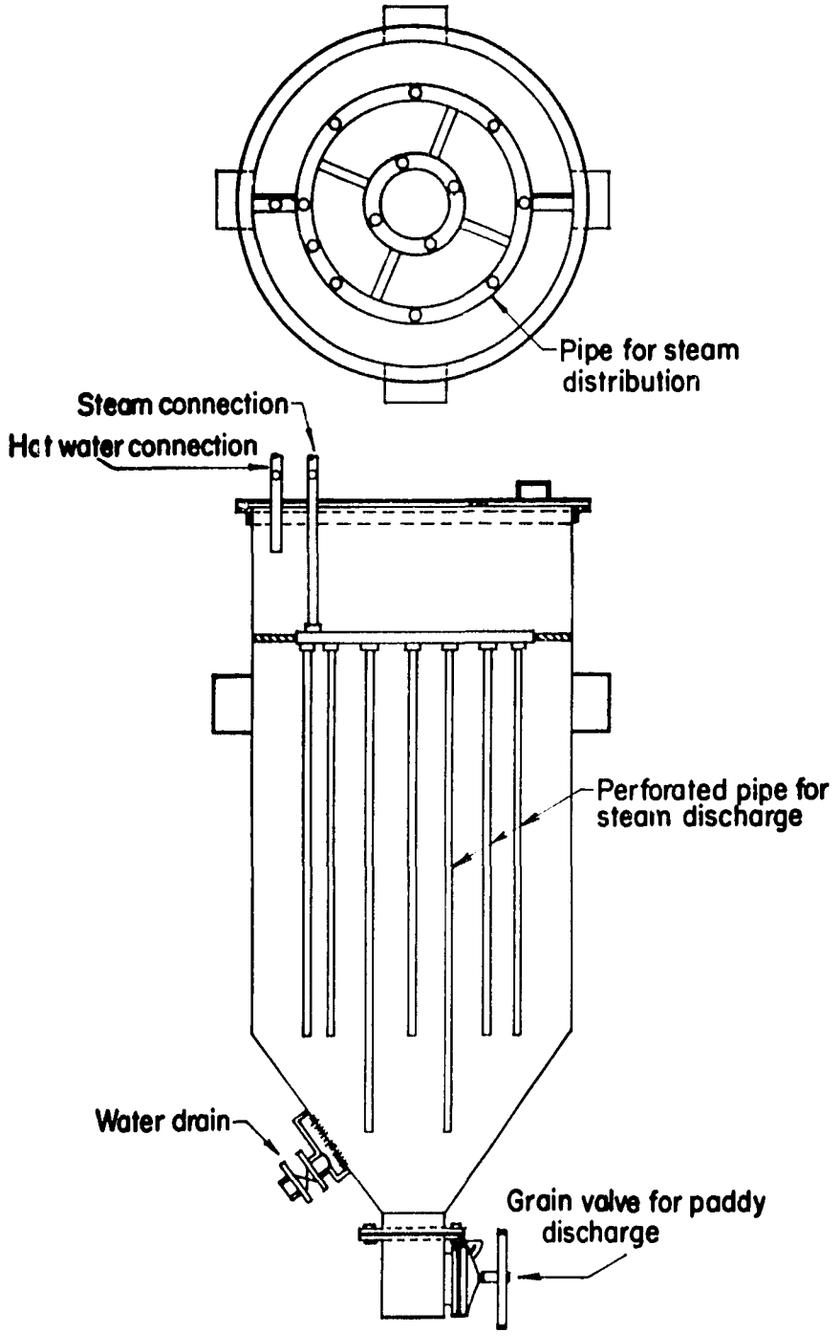

Fig. 8. PARBOILING TANK

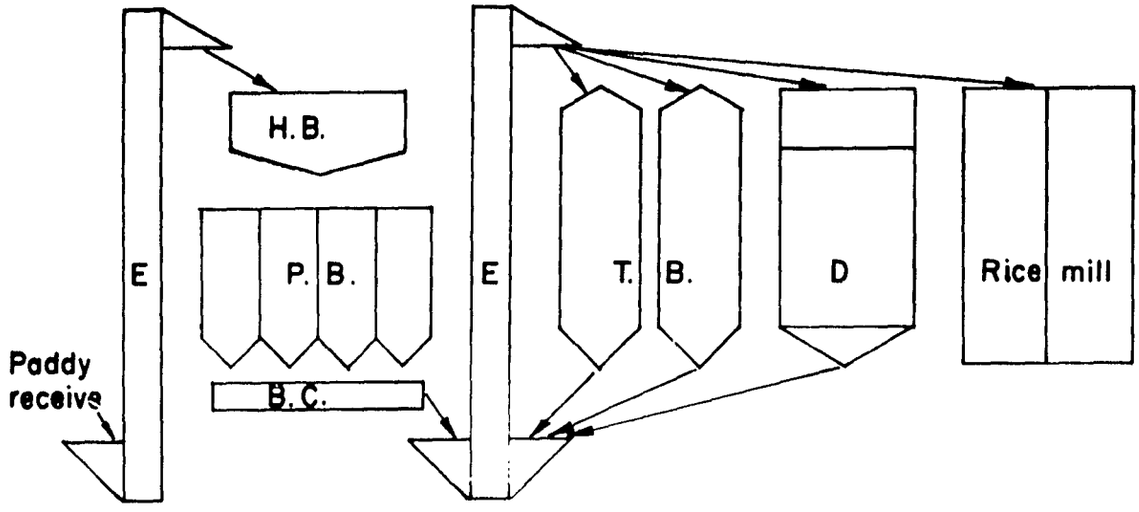

FLOW DIAGRAM

E = Elevator
H.B = Holding bin
P.B. = Parboiling point
D. = Dryer
T.B. = Tempering bins
B C. = Belt conveyor

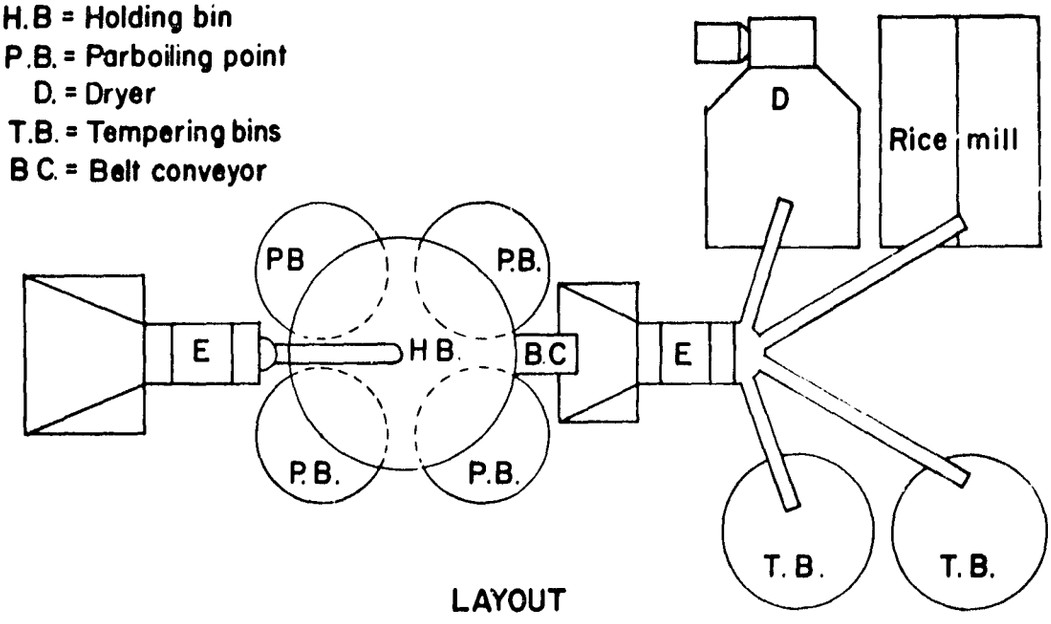

LAYOUT

Fig. 9. PARBOILING SYSTEM

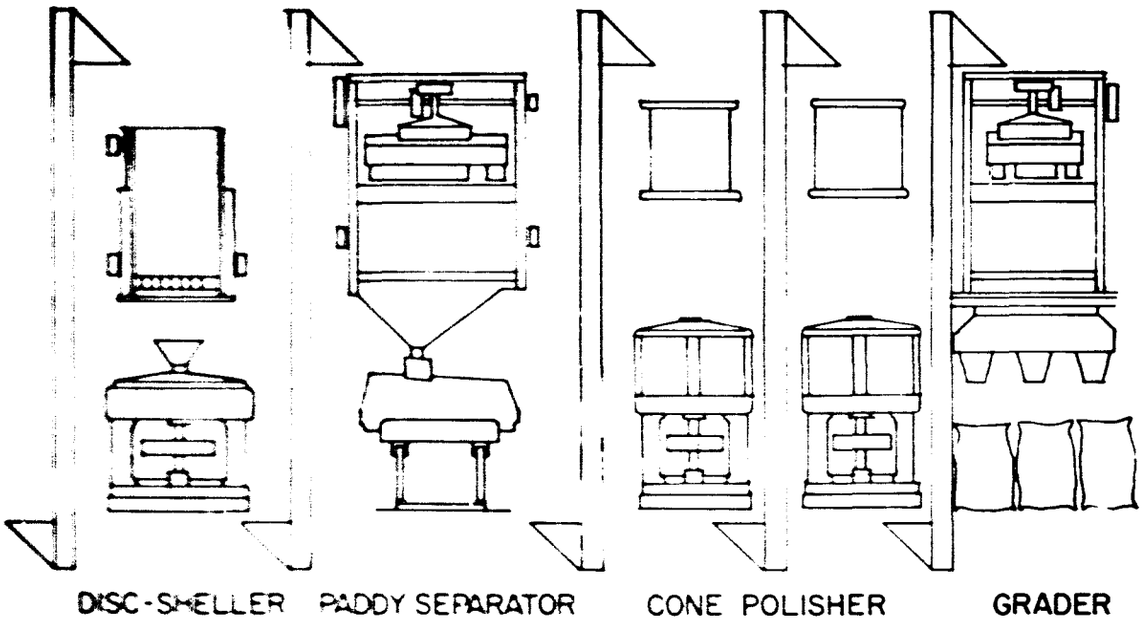

Fig 10. DISC-SHELLER RICE MILL

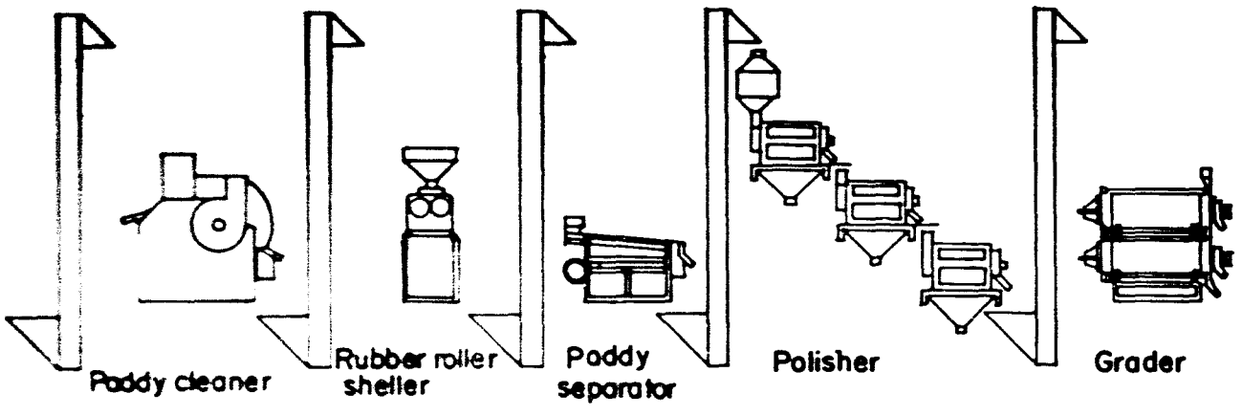

Fig. 11. MODERN RICE MILL