AGENCY FOR INTERNATIONAL DEVELOPMENT
WASHINGTON, D. C. 20523

BIBLIOGRAPHIC INPUT SHEET

FOR AID USE ONLY
BATCH #28

1. SUBJECT CLASSIFICATION

A. PRIMARY: Agriculture — AN20-0000-0000

B. SECONDARY: Farm equipment

2. TITLE AND SUBTITLE

Harvesting and threshing of rice

3. AUTHOR(S)

Casem,E.O.

4. DOCUMENT DATE	5. NUMBER OF PAGES	6. ARC NUMBER
1967	15p.	ARC

7. REFERENCE ORGANIZATION NAME AND ADDRESS

IRRI

8. SUPPLEMENTARY NOTES *(Sponsoring Organization, Publishers, Availability)*

9. ABSTRACT

10. CONTROL NUMBER

PN-RAB-562

11. PRICE OF DOCUMENT

12. DESCRIPTORS

Harvesting
Rice
Threshing

13. PROJECT NUMBER

14. CONTRACT NUMBER

CSD-834 Res.

15. TYPE OF DOCUMENT

AID 590-1 (4-74)

CSC 839 Rec.
TA/AGR

IRRI Saturday Seminar, Sept. 9, 1967
Agricultural Engineering Department

HARVESTING AND THRESHING OF RICE

Emilio O. Casem

Farmers in Asia where 90% of the world's rice is grown still harvest and thresh their rice grain mostly by hand, using methods which have been followed for centuries.

With the recent breakthrough in breeding high-yielding, erect, short stiff-strawed, disease-resistant, early maturing, and photoperiod non-sensitive rice varieties, and better water control, the small landholder who comprise the bulk of farmers and usually is out of work after storing the produce from his single annual crop is now faced with the prospect of being able to harvest a second and even a third crop of rice within a year. This situation would keep him busy all year-round. Unless his harvesting, threshing, and other time-consuming operations are mechanized, it may not be economically sound for him to plant a second crop of rice, much more a third. If the manufacturers, dealers, extension workers and custom work contractors have the machines to efficiently and economically perform the above operations, the farmer would be more than glad to even go into debt to avail of the use of such machines in his farm. However, many of the harvesting and threshing machines on the market are either not suited to local conditions or are suited but quite expensive.

This paper aims to discuss to some extent the methods and devices or machines used for harvesting and threshing.

Harvesting

Methods and Devices or Machines Used

"Yatab". This device is used for panicle-harvesting by hand. It consists of a wooden handle and a knife blade, the base of which is pushed into the handle. The blade may be a straight sharp edge 1 to 1.5 inch long with a blunt hump at the posterior end, embedded in a short cylindrical tubing with an inside diameter just right for half of man's forefinger to go through, or it may be a 3.5-inch curved blade having the shape of an included arc of a circle whose radius is also about 3.5 inches and which is embedded across on a solid cylindrical piece of wood about 4 inches long and 0.75 inch in diameter.

The cutting is accomplished by getting the panicles against the blade and pushing through at the side or sides of the blade with another finger or fingers. The panicles are cut singly or in two's a little above the top node. Usually the flag leaf is cut with the panicle and removed after cutting. A skilled person can harvest about 15 kg of brown rice per hour. Grain loss is minimized and immature grains and other impurities are excluded as there is a high degree of freedom of selection.

Sickle. The sickle consists of a wooden handle and a knife blade, the base of which is pushed into the wooden handle (see Fig. 1). The blade, which is about 20 cm long, may have a smooth edge or a serrated edge (15 serrations per inch, with teeth 1 mm long). The angle between the blade and the handle ranges from 18° to 90°. The serrated blade need not be sharpened as often as the smooth blade.

The standing mature rice is cut at a height of 1 to 3 cm above the ground (in certain areas the rice is cut about a foot above the ground) using one hand

and gathered using the other. Each handful of straw is laid on the stubble parallel to the previous ones and gathered immediately and transported to the threshing site, or left to dry for 1 to 2 days and then threshed or piled into "mandalas" (haystacks).

Harvesting efficiency depends on many factors, such as growth of crop, dryness of field, degree of lodging, method of binding, and the worker's skill. The harvesting efficiency of a skilled person in standing rice is about 0.01 ha per hour and that of a woman is about 40% less. Lodged rice requires more labor and usually reduces the rate of cutting by 50%.

Hand Dropper. This is a machine of Japanese origin adapted for row planting and on drained soil with a good degree of firmness. It consists mainly of a pair of straight serrated blades, one facing the other and angled some 30°, a gripping mechanism to hold the straw base cut by the blades and connected to a lever, and a meter-long wooden handle. It is made of steel and wood and weighs 3 kg. The angle of the handle is adjustable to the height of the operator. No wheels are involved.

An operator pushes the machine which cuts the mature standing rice for 2 or 3 meters at a certain height (1-3 cm), then pulls the lever so that the straw are seized tightly in the frame. Subsequently, he pulls the machine a little backward so that the seized straw and grain will be completely cu . The straw is then dropped and laid on the field. The rate of work is 0.02 - 0.025 ha per hour.

Hand Rice Binder. This machine is more sophisticated than the hand dropper. It is made entirely of steel, is adapted for standing row-planted rice crop, and does both cutting and binding. It consists mainly of serrated blades (positioned in the same manner as in the hand dropper), binding section (made up of the binding mechanism, the rope reel, and binder handle), a pair of rubber wheels, and separate left and right handles. It weighs about 20 kg.

The operator pushes the machine along the row of standing rice and stops periodically. At every stop, after the operator has cut the crop, he raises the left handle to seize the cut plant. A certain quantity is separated by a dividing mechanism and carried into a gathering box with the aid of a packer. It is then carried backwards by a belt and tied into a bundle with a rope. The gather-box turns backward at a set interval and deposits the bundle on the ground. The rate of work is 0.02 ha per hour.

Windrower. This is a power harvester. It cuts and lays down the crop at the side of the machine so that the panicles are kept at the off-side of the windrows. The windrower is developed and simply designed to be attached to the front hitch of the hand tractor with a 2 to 5 HP engine. It consists of three major elements: reciprocating cutter bar (or circular serrated blade), pre-gatherer, and conveying mechanism with lugged belts. It can harvest either row-planted or broadcast rice. It adapts well to lodged rice with a maximum inclination of 60° and on firm soil. It weighs about 50 kg.

The harvesting process is composed of three stages: cutting down the crop by the machine, natural curing in the field, bundling or gathering the cut crop in reasonable amounts for immediate threshing or piling into "mandalas". The rate of work is 0.08 - 0.15 ha per hour.

Pneumatic stripper harvester. An Australian firm has developed a power driven machine for stripping cereal and other farm crops. The machine was

designed originally for harvesting crop-breeding plots but has found much demand in less-developed countries. A comb 2 ft wide in the front of the machine is surmounted by a set of 6 fan-type beaters attached to a horizontal spindle. As the machine proceeds the heads of the plants enter between the fingers of the comb and are removed from the stalks by suction. A threshing concave behind the comb further breaks the material apart. Next a tapered duct is provided from the beaters to the rear of the machine and a strong draft of air conveys the material to a separating bowl. The one revolving set of beaters perform the five distinct functions of sucking, smashing, rubbing, projecting, and separating. Ground speed is about 3 mph. Harvesting capacity under ideal conditions is about 0.152 ha per hour.[1]

Cone stripper harvester. Strohman and Stout (1964) of Michigan State University designed and built a single row standing grain harvester for rice. The threshing efficiency of the cone threshing device was 87% and the average total losses were 3%. The recovered material had to be rethreshed and then cleaned by separate equipment.

Combines. The combine harvests, threshes, and cleans the grains as it moves on the field. With a pickup attachment, it can be used to handle grain that has been cut. Due to its enormous weight, the combine requires very firm soil to support it and for better traction. It is adapted to broadcast standing rice which has a good degree of dryness at harvest.

Combines are of three general types with respect to power: (1) trailed with auxiliary motor, (2) trailed with power take-off, (3) self-propelled.[2]

The functional elements of a large self-propelled combine are: (1) header, (2) reel, (3) auger, (4) undershot conveyor, (5) stripper-beater, (6) cylinder, (7) grain tank, (8) unloading auger, (9) grain elevator, (10) beater behind cylinder, (11) strawwalkers, (12) walker return pan, (13) chaffer sieve, (14) shoe return pan, (15) shoe sieve, (16) tailings return elevator, (17) grain auger, (18) fan, (19) grain pan under cylinder, and (20) concave. (Massey-Ferguson, Inc.)

The crop being harvested is fed from the cutting table to a threshing drum, where the grain is knocked out of the heads as these pass between a revolving cylinder and a stationary concave. Some 20% to 80% of the grain may fall directly to the sieves. The grain in the straw and chaff is separated by straw-rack agitation, and after passing over agitated sieves where cleaning is completed by fan blast, the grain is delivered to the bulk container or to the bags.

A 60- to 80-HP combine has a capacity rating of 0.46 ha per hour in areas where combines are regularly used and 0.2 ha per hour in areas not regularly using combines.

- - - - - - - - - - - - - - - -

[1]Source: Agricultural Engineering. Vol. 43. September, 1962. p. 540.

[2]Source: Carrol, T. Combines. Agricultural Engineers' Handbook. 1961.

Threshing

Methods and Devices of Machines Used

Foot threshing by man. This method is generally practiced for threshing rice for seed. It is a very slow operation but there is practically no damaged grain. A farmer can thresh about 14.5 kg of brown rice per hour.

Treading by animals. Cattle, carabaos, and horses are generally used. This method is faster than foot threshing by man. However, some amount of grain is damaged or hulled due to the hard hooves and weight of the animals. It is claimed that one animal can thresh some 165 kg of brown rice per hour.

Flail threshing. The rice panicles are laid in bundles on a hard surface and hit several times with a piece of wood or similar material until the grains separate from the straw. One man can thresh about 40 kg per hour.

Beating grain and straw on stone slab, bamboo rack, etc. This method of threshing is popular in Laguna Province (see Fig. 4). It involves striking a bundle of grain and straw against a stone slab, or a framework of wood or bamboo slats. The number of strikes required is generally less for indica rice than for japonica varieties. One man can thresh 62.5 kg per hour.

Pedal Thresher. This machine consists of a wooden drum having loop wire teeth spaced regularly all around it. Each tooth in one row is in the middle of two teeth of the other row so that the teeth in the alternate rows are arranged on the circumference of the same circle. The separation of the paddy grain takes place in between these teeth. The drum is mounted on a shaft which receives rotary motion from the pedal by means of a transmission system consisting of a crank gear and a pinion. The shaft of the drum is mounted on 2 ball bearings at both ends. The whole machine is mounted on wooden framework. The machine is generally operated by one or two men. The man threshes the bundle that he has gathered by pedaling with a rhythmic body action while holding and twisting the bundle against the threshing drum. Working with material from a stack, 50 woman-hours were required to thresh and sack a metric ton of grain, and 85 woman-hours to gather, thresh, and sack wet material in a muddy field. The rated capacity of one pedal thresher is 50 kg of brown rice per hour (threshing only).

Power thresher. The basic machine is the same as in the pedal thresher, except that it is powered by a 0.5 - 2.0 HP motor. It has a winnower and the separated grain can be taken out in bags.

An operator holds a bundle of grain with straw and inserts the heads into the threshing chamber and turns the bundle to be threshed completely. The grains are cleaned from the chaff by a sieve and a winnower under the chamber. A helper lifts sacks filled with grain to the side and corrects cleaning adjustments. Three other men carry the cut rice near the thresher or remove the straw. The machine has a threshing capacity of 180-250 kg of brown rice per hour.

Self-feeding (automatic) thresher. This is a power thresher with a self-feeding attachment. It is powered by a 4-HP engine. There is no need for the operator to hold the bundle of rice grain and straw while threshing. The bundles placed on the platform are fed by hand to the chain self-feeder so that the heads are put into the threshing chamber. The chain self-feeder conveys the bundles along the threshing drum where they are completely threshed, and

finally thrown down to the ground. This machine requires about the same number of men as the power thresher to operate it continuously. The threshing capacity is 500-750 kg/hour.

Stationary large thresher ("tilladora"). This is a throw-in type thresher. The grain and straw are fed into the machine in bundles of 4-5 inches in diameter. It has the basic features of a combine minus the header section. Eight to ten men compose a team to operate the machine. It is usually belt-driven and powered by a 45-65 HP tractor. The thresher is best suited for comparatively dry crop piled into "mandalas". Usually the machine is placed beside the "mandalas" where threshing is done. Threshing with this machine is performed sometime after harvest when the fields have dried up and hardned to support its weight. The capacity of the machine is 3,500 to 4,400 kg of brown rice per hour.

Cone thresher. A model was designed and fabricated at the International Rice Research Institute based on a cone thresher patented by W. F. Buchele. The machine is essentially a rotating cone powered by a 6-HP engine. Difficulty was encountered in feeding the grain without choking the cylinder, in separating the trash from the grain, and in the wrapping around of the straw over protruding bars and shafts (see Fig. 6). The maximum output obtained was about 300 kg of brown rice per hour, with 3 men feeding the machine from a stack.

Trailing PTO-driven thresher. This is another experimental unit fabricated at the Institute. It has a 10-foot long drum with a diameter of 16 inches. Wire loops are used as teeth. The PTO (power take-off) drive of the pulling tractor runs the thresher. Drum RPM is about 540 (peripheral speed is 2,200 ft per minute). Three to four men can thresh on the machine simultaneously.

Trials runs made at the IRRI Experimental Farm gave a maximum output of 310 kg of brown rice per hour.

- -

Table 1. Grain yield (cavan/ha) and weight of 1,000 grains (gm) of three Seedboard lowland rice varieties harvested at different dates from heading. UPCA, 1964 dry season.

Variety	Days From Heading 20		25		30		35			
	Yield	Seed weight	Yield	Seed weight	Yield	Seed weight	Yield	Seed weight	Yield	Seed weight
Peta	43.72	26.3	54.55	27.6	64.90	28.4	65.80	28.3	57.24	27.7
Tjeremas	46.72	26.8	49.50	27.6	49.95	27.2	54.90	27.4	50.26	27.2
Bengawan	52.20	27.8	59.15	27.8	63.77	28.4	63.25	29.6	59.59	28.4
Mean	47.55	26.9	54.40	27.7	59.54	28.0	61.31	28.4		

			C.V.
Grain yield, HSD .05:	among treatments	= 6.90	
	among varieties	= 4.62	11.6%
Seed weight, HSD .05:	among treatments	= 0.52	3.3%
	among varieties	= 0.52	

Source: Rice Production Manual, page 288.

- - - - - - - - - - -

Table 2. Effect of threshing drum peripheral speed on the threshed grain.

Fraction	Peripheral speed of drum	Germination	Germinative energy	Emergence Total	Emergence Control	Weight of 100 plants Absolute	Weight of 100 plants % of control
	m/sec	%	%	%	%	g	
First	11	99	97	97	123	6.3	126
Second	30	88	87	72	91	4.6	92
First	15	98	97	94	120	6.1	122
Second	30	90	84	70	89	4.5	90
First	20	97	97	90	114	5.8	116
Second	30	89	84	65	82	4.1	82
Control	30	97	93	79	100	5.0	100

Source: Kolganov, K. G. Mechanical Damage to Grain During Threshing. Journal of Agricultural Engineering Research. Vol. 3, No. 2, 1958.

Table 3 (Cont'd.) Power Requirements in Rice Production in Manhours, Animal-Hours, and Rated Horsepower-Hours Per Hectare.

Operation	Reference	Man-Hrs./Ha. Metric Ton*			Animal-Hrs./Ha.			Rated HP-Hrs./Ha.		
		Min.	Max.	Ave. Range	Min.	Max.	Ave. Range	Min.	Max.	Ave. Range
HARVESTING										
A. Hand harvest, individual panicles only with small knife										
1. Cut panicle	(2)			240 hrs/ha.						
	(9)			69*hrs/MT						
B. Hand harvest with sickle, transport and stack	(13)(49)(50) (56)(59)(82)(88)	72	370	80-160						
C. Tractor and Binder (40 HP)	(28)(50)(81)									
1. Binding		4.0						30		
2. Shocking		8.0						-		
3. Threshing		12	30					240		
4. Hauling		2						80		
D. Combine, and two man crew 60-80 HP (U.S.)	(40)(60)(81)(82)									
1. Combine in areas of regular use.		2.2	7.5	4.4						175
2. Combine on test in tropics and areas not regularly using combines	(4)(6)(32)(44) (50)	3.2	21.5	6 to 12				100	500	180-360
E. Thresh										
1. Foot threshing by man	(9)(13)	69*hrs/M.T. 200 hrs/ha.								
2. Flail threshing	(2)	16*	35*	20-30*hrs/M.T.						
3. Thresh by beating grain and straw on bamboo ladder or basket	(53)	16*man-hrs/M.T.								
4. Pedal thresher	(40)	8-10*	25*	20*man-hrs/M.T. 100*man-hrs/ha.						
5. Trample by ox or buffalo	(2)	6*hrs.M.T.			6*?					
	(13)	60 hrs./ha.			150					
	(42)	89 hrs./ha.			178					

Table 3 (Cont'd.) Power Requirements in Rice Production in Manhours, Animal-Hours, and Rated Horsepower-Hours Per Hectare.

Operation	Reference	Man-Hrs./Ha,			Animal-Hrs./Ha.			Rated HP-Hrs./Ha.		
		Min.	Max.	Ave. Range	Min.	Max.	Ave. Range	Min.	Max.	Ave. Range
HARVESTING (Cont'd)										
6. Powered Japanese thresher 0.5 to 3 HP	(40)(75)	48 20*	197 25*hrs /M.T.	100				15 3*	25 5*hrs. /M.T.	
7. Tread or run-over with std. tractor	(13) (36) (42)			80 12				55 50*	150 80*HP-hrs./M.T. w/ 15 HP tractor & disc harrow.	80 40-80
8. Stationary large thresher	(13)(8)(50)	12	30	12				90	180	
9. NIAE Thresher	(54)	52*	155*/ M.T.	80*/ M.T.				3.2*	9.7*	5*/M.T.
G. Cleaning of Grain										
1. Throw grain up for wind to winnow	(13)	10*/M.T.								
2. Field winnowing with hand fan	(2)			6.7*man-hrs./M.T.						
3. Fan Mill, hand operated	(2)(13)(53)(75)	1.5*	7*/M.T.							
4. Chaff sieve	(53)	4.0*	8.0*/ M.T.							

Note* - per 1000 kgs. (or M.T.)

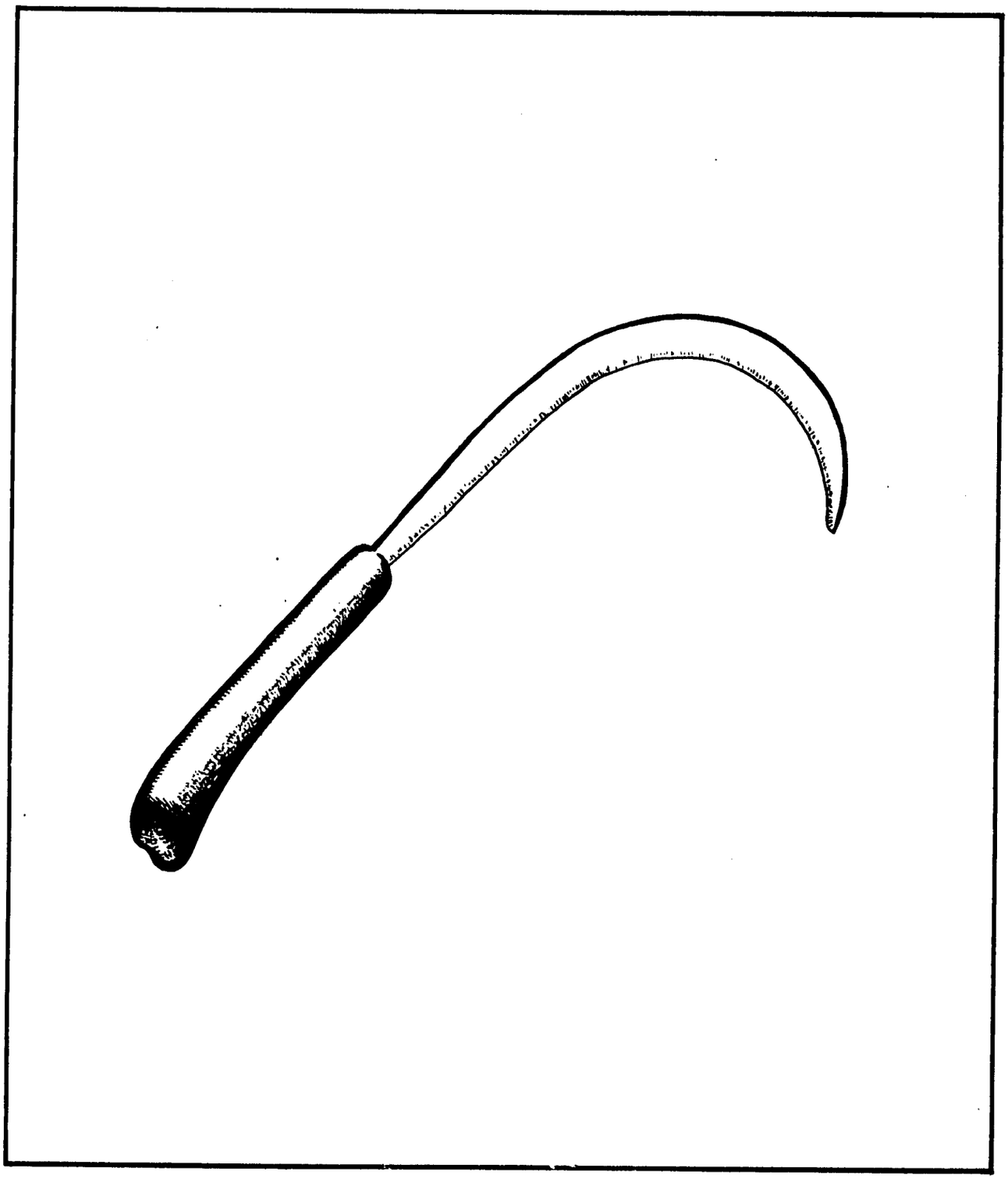

Fig. 1. Sickle

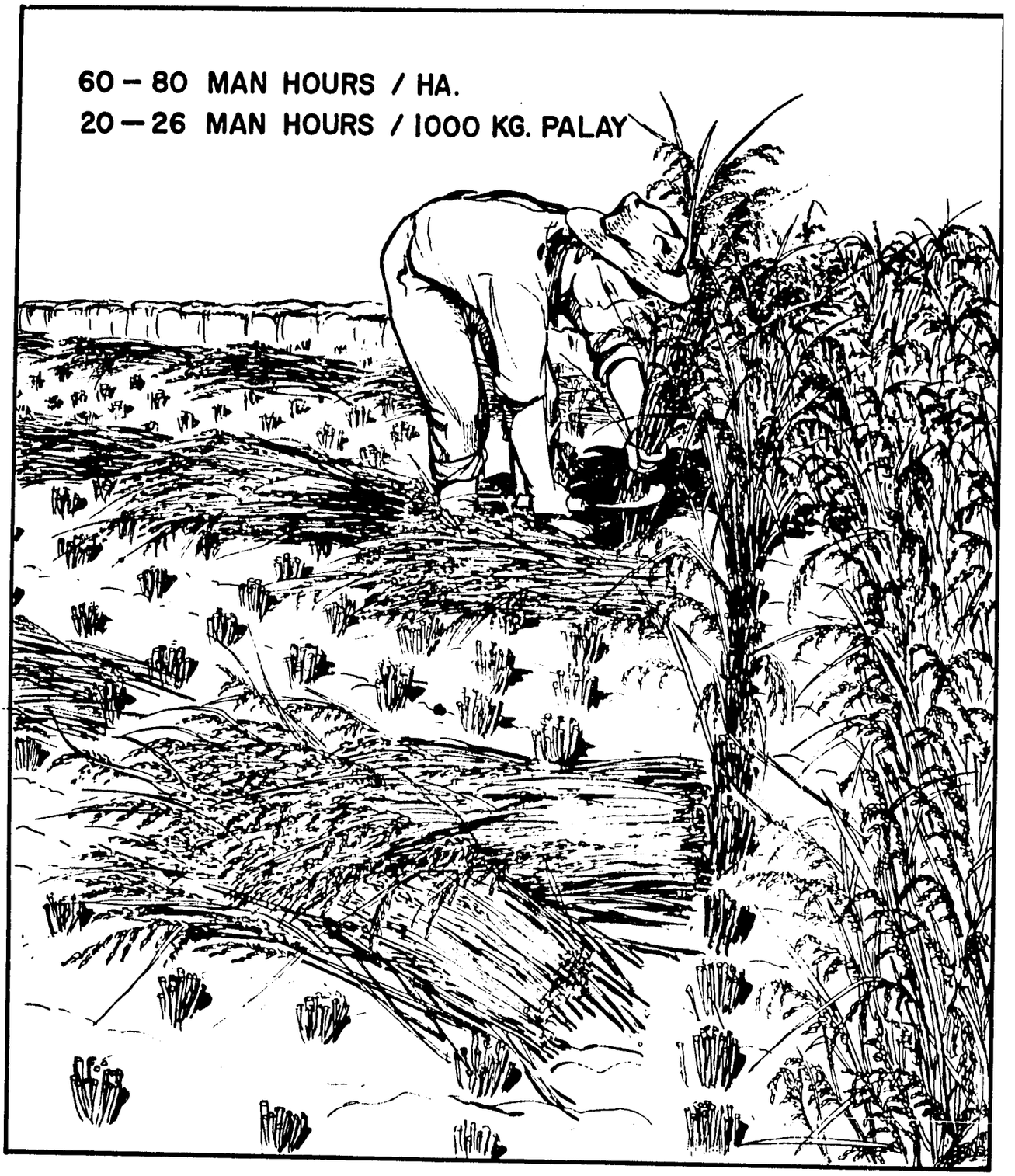

Fig. 2. Cutting and laying.

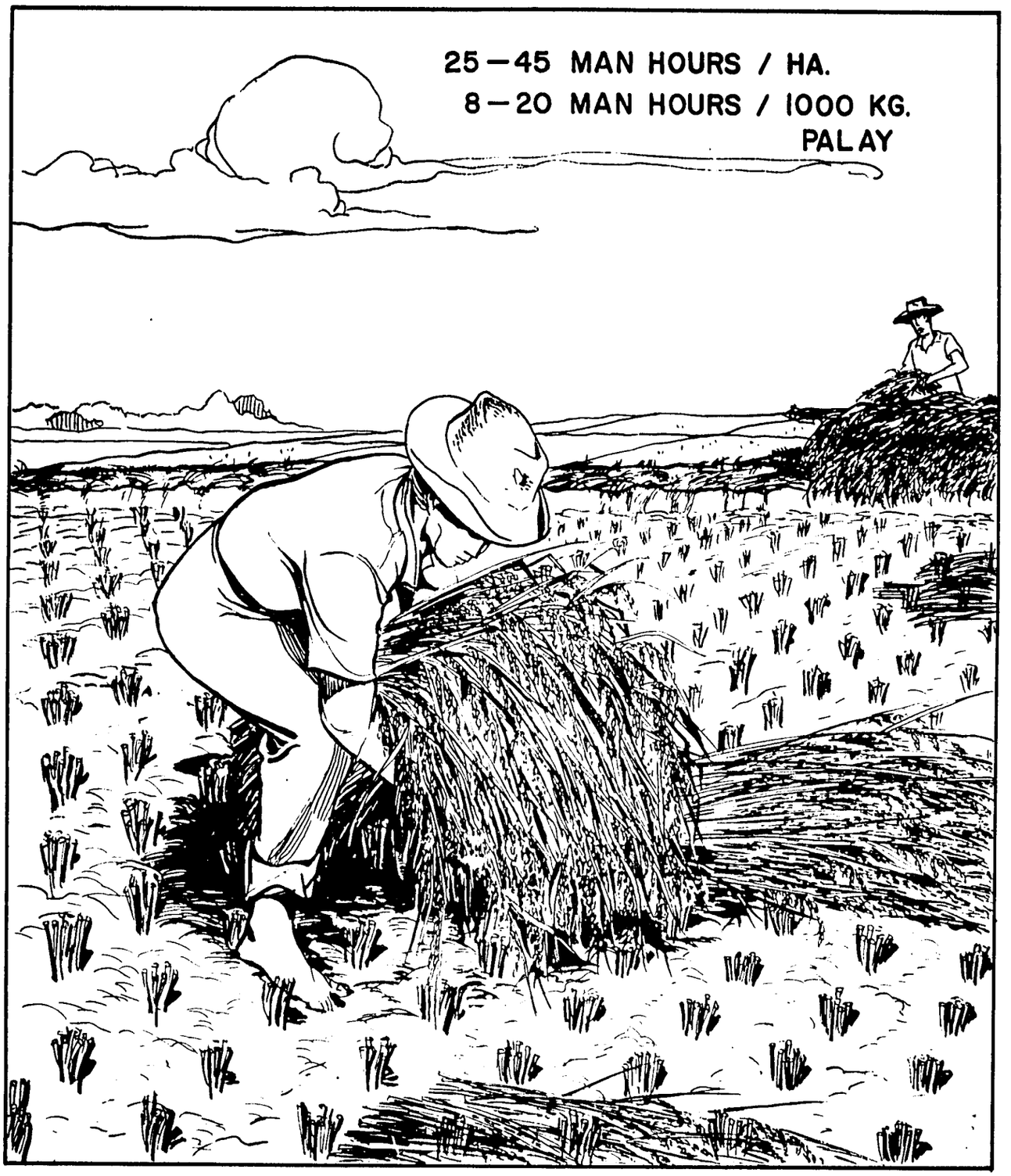

Fig. 3. Carrying and stacking.

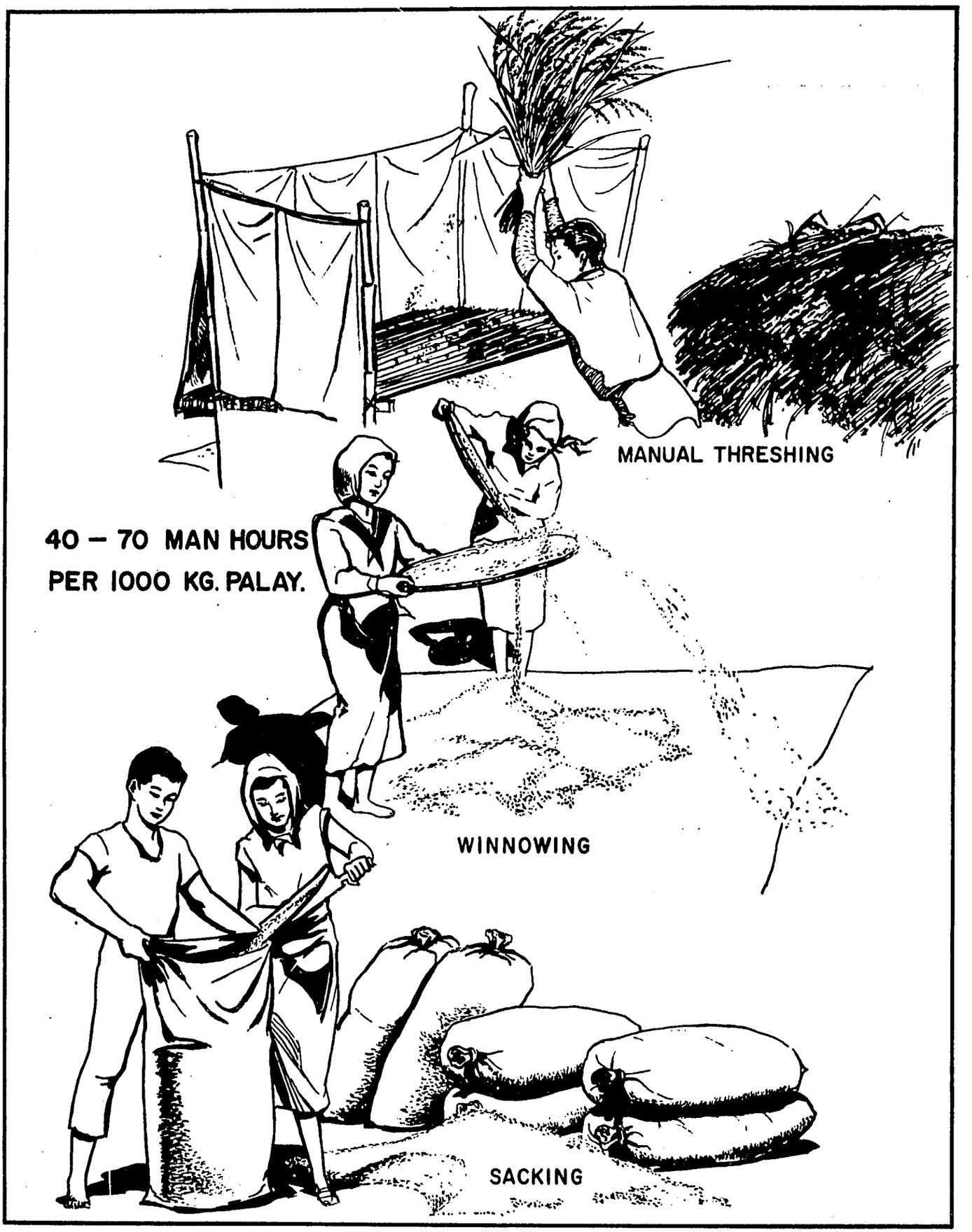
MANUAL THRESHING
40 – 70 MAN HOURS
PER 1000 KG. PALAY.
WINNOWING
SACKING

Fig. 4.

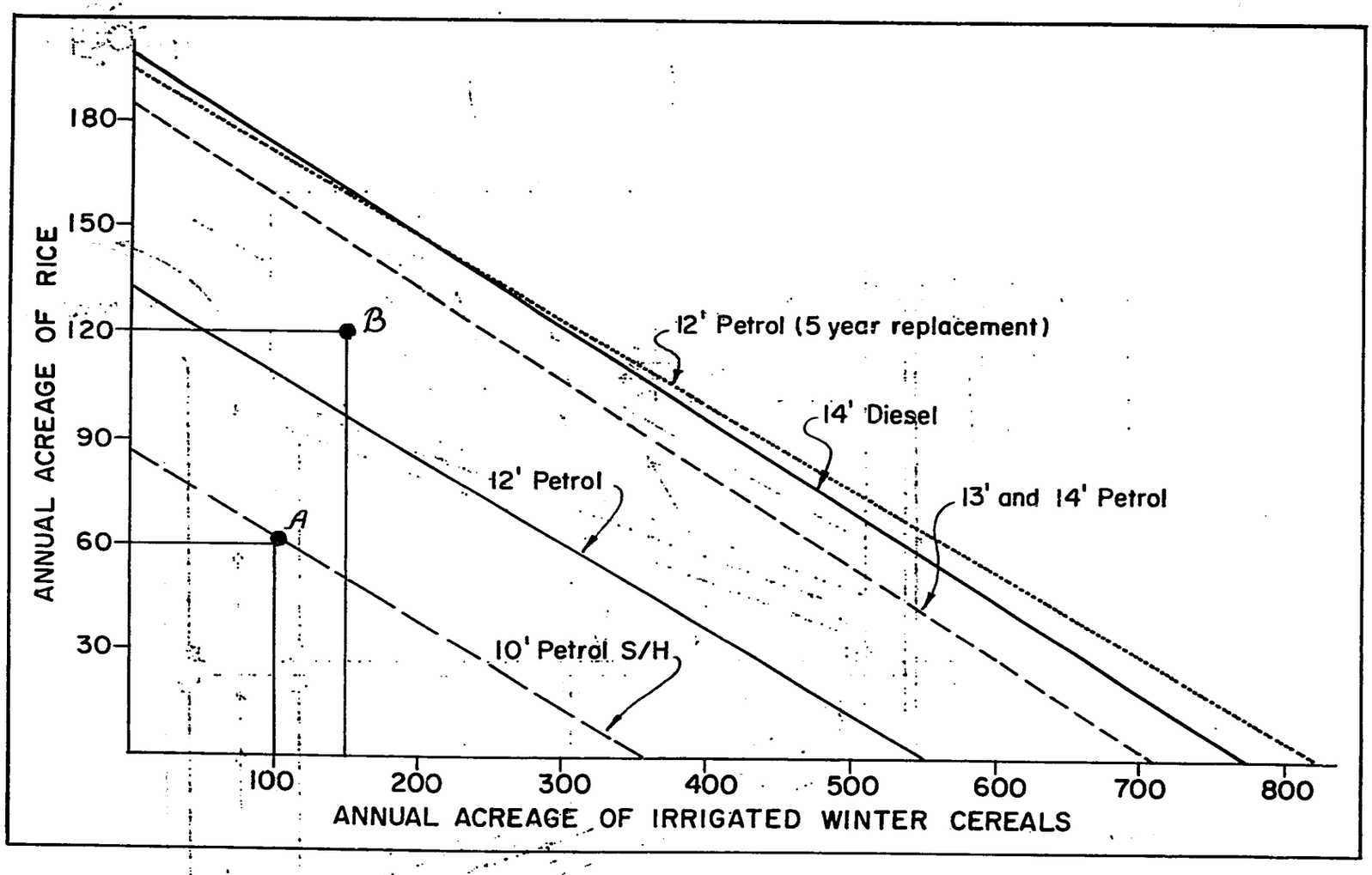

Fig. 5. Break-even lines between header ownership and employment of contractors (10 years replacement unless otherwise indicated).

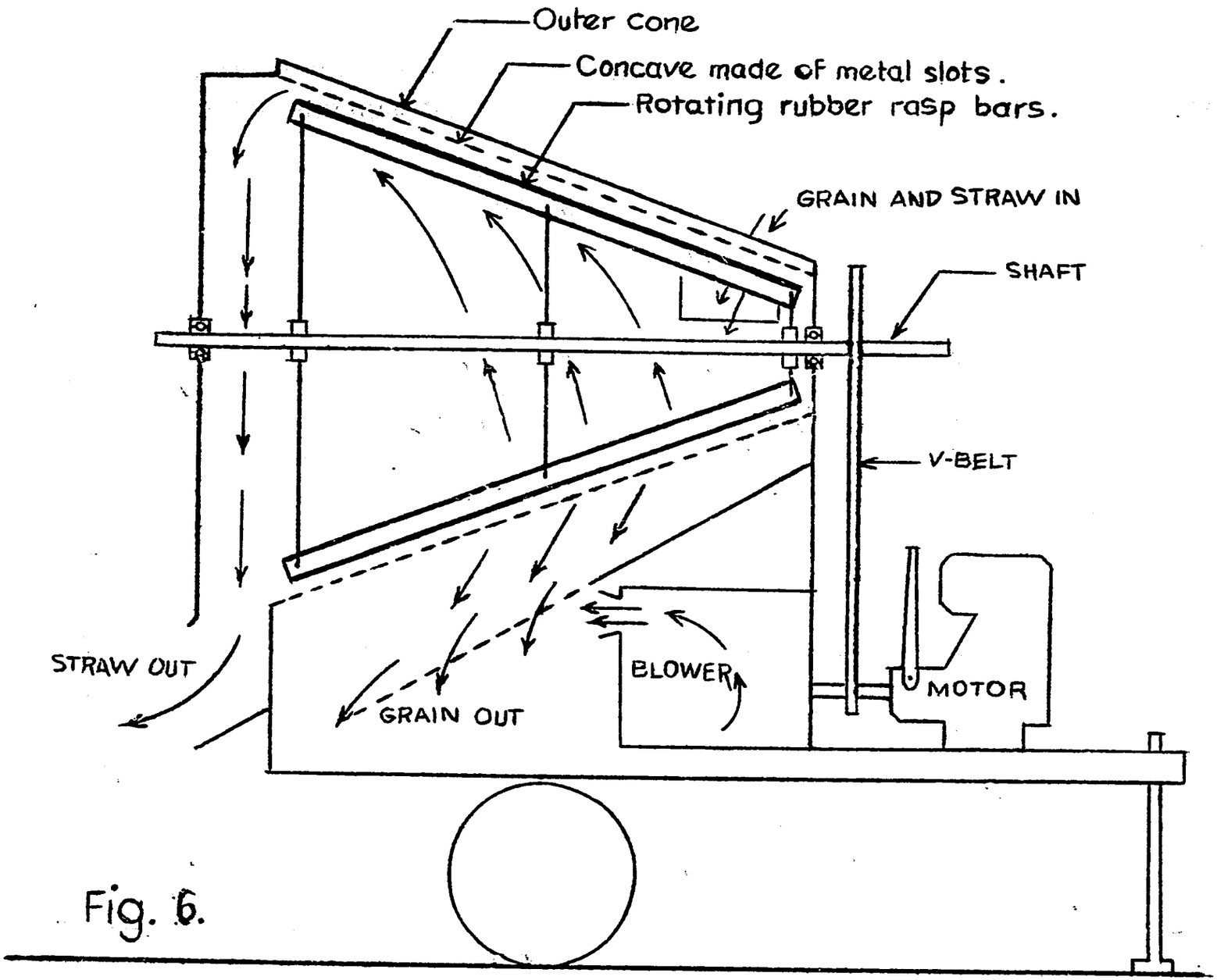
Outer cone
Concave made of metal slots.
Rotating rubber rasp bars.
GRAIN AND STRAW IN
SHAFT
V-BELT
STRAW OUT
GRAIN OUT
BLOWER
MOTOR

Fig. 6.

KEY REFERENCES

1. Agriculture, Forestry and Fisheries Council Secretariat (Japan). The Present Status of Machine and Implements Used for Rice Cultivation in Japan. 1962.

2. Buchele, W.F. The Principles of Threshing Small Grains. Paper No. 18. NATO Advanced Study Institute Mechanization of Field Experiments. 1964.

3. Cervinka, I.V. Engineering Study of Rice Harvesting. Legon, July 1966.

4. Chancellor, W. Experiments on Padi. An Experiment on Force and Energy Requirements for Cutting Paddy. University of Malaya, 1963.

5. Ezaki, H. Harvesting Rice in Japan. Working Paper No. 12. IRC Working Party on the Agricultural Engineering Aspects of Rice Production, Storage and Processing. 3rd Meeting, 1964.

6. Haynes, D.W. The Use of Self-propelled Combine Harvesters for the Harvesting of Wet Padi in the North Kedah Plain. The Malayan Agricultural Journal, Vol. 37, No. 2, 1954. pp. 68-90.

7. Johnson, L. and others. Labor and Procedure for the Pedal Thresher. IRRI Technical Paper 2. September 1966.

8. Johnson, L. Power Requirements in Rice Production. Conference Paper on the Agricultural Engineering Aspects of Rice Production. August 1963. IRRI, Philippines.

9. Lodigiani, L. Agricultural Mechanization. Rice Harvesting. United Nations Economic Commission for Europe, Geneva (June 1956).

10. Ryan, J.G. Cost of Owning a Header versus Employment of a Contractor. Farmers' Newsletter (N.S.W., Australia) pp. 30-39, April 1967.

11. R.I.C.E. Rice Production Manual. pp. 287-294. Philippines, 1967.

12. Sinha, M.P. Comparative Trial of Paddy Threshers Pedal Operated. Working Paper No. 4. IRC Working Party on the Agricultural Engineering Aspects of Rice Production, Storage and Processing. 3rd Meeting, 1964.