AGENCY FOR INTERNATIONAL DEVELOPMENT
WASHINGTON, D. C. 20523

BIBLIOGRAPHIC INPUT SHEET

FOR AID USE ONLY
BATCH # 28

1. SUBJECT CLASSIFICATION

A. PRIMARY: Agriculture — AN20-0000-GG50

B. SECONDARY: Farm equipment--Tropics

2. TITLE AND SUBTITLE

A row seeder for lowland rice soils

3. AUTHOR(S)

Navasero,N.C.

4. DOCUMENT DATE	5. NUMBER OF PAGES	6. ARC NUMBER
1969	8p.	ARC

7. REFERENCE ORGANIZATION NAME AND ADDRESS

IRRI

8. SUPPLEMENTARY NOTES *(Sponsoring Organization, Publishers, Availability)*

9. ABSTRACT

10. CONTROL NUMBER

PN-RAB-560

11. PRICE OF DOCUMENT

12. DESCRIPTORS

Planting
Rice
Seeders?
Tropics

13. PROJECT NUMBER

14. CONTRACT NUMBER

CSD-834 Res.

15. TYPE OF DOCUMENT

AID 590-1 (4-74)

7

CSD-834 Rev.
TA/AGR

Saturday Seminar (IRRI)
September 6, 1969
Agricultural Engineering

A ROW SEEDER FOR LOWLAND RICE SOILS

Nestor C. Navasero

Transplanting rice has been widely practiced in tropical countries. This practice results in high labor requirements. Many studies have indicated a labor requirement of 96 to 120 man-hours per hectare for transplanting. The persistent increase in labor costs has intensified the pressures on the farmer to search for lower cost of production. This has led him to question some of his traditional practices. To reduce the costs involved in growing, pulling and transplanting the seedlings, direct seeding has been introduced. In many areas, broadcast methods are used, since suitable row seeders for wetland rice are not available.

A project was initiated to develop a row seeder which would seed pre-germinated paddy uniformly with minimum operator skill. The machine was designed with the following requirements in mind:

1) Light weight for one man operation

2) Locally manufactured

3) Simple and low cost.

A mechanical seeder has two basic functions: first, metering of the seeds from a bulk supply; second, conveying and placing the metered seeds at a desirable location in the soil.

The problem that arises in the use of pre-germinated seeds is the tendency of the seeds to interlock with each other. This increases bridging in the hopper. Agitators can be used to reduce bridging but the use of agitators also cause mechanical damage. The use of an independent metering device for individual rows also increases bridging due to the small quantity of metered seeds removed from the hopper. To avoid bridging, it was felt that a two-step metering device should be used. The first step would be to meter a larger quantity of pre-germinated seeds from the hopper and the second step would be to distribute the metered seeds to the individual rows. Two seeders were designed to overcome the above-mentioned problems. The placement of seeds under lowland conditions also poses a number of problems. In order to avoid seed damage from pre-emergence herbicide applications, rats, birds, algae and other pests, it is desirable to imbed the seeds in the mud just below the surface. The clogging of seed tubes under lowland conditions and the covering of the seed after placement are problems which need special attention.

Fig. 1 shows the first prototype. This seeder was patterned after the simple six-row seeder which has gained some acceptance in Ceylon. The experimental seeder had the two-step metering arrangement and two additional seed tubes to sow eight rows in one pass. It was equipped with a small hopper of one-half kg capacity. The metering arrangement consisted of a scraper and a set of eight rectangular seed openings in the hopper. Each of these openings was connected to individual seed tubes. A 2 m x 0.15 m skid was fastened to the lower ends of the seed tubes to provide flotation and to

hold the seed tube openings about 4 inches above the seedbed surface. The seeder weighed 5 kg and was pulled backward during operation. The operator paused momentarily to distribute the seeds among the eight rectangular openings by means of the scraper.

After a dry-run test in the laboratory confirmed the uniform distribution of the seeds, a field test was conducted to determine the performance of the machine under actual field conditions. Considerable variation in seed placement was observed. On extremely soft surface, the seeds tended to sink into the mud. On harder portions of the field, the seeds remained exposed on the surface. This indicated a necessity for opening furrows for proper seed placement in the field.

The skid provided enough flotation as expected. However it had a bulldozing effect especially on extremely soft surfaces and on areas with excess water. Some of the bulldozed mud was pushed out to the sides and this flowed back behind the skid. This disturbed the seeds which were previously placed on the adjacent rows and also the seeds being sown by the two tubes situated at the ends of the skid. Improved performance was observed when the field was completely drained before seeding. It was also observed that the rate of seeding and the accuracy of seed spacing in the rows were dependent mainly on the operator's skill. The backward walking of the operator in deep mud was a tiring operation. The hand metering device was able to meter the germinated seeds satisfactorily even when the seeds were in an advanced stage of germination (maximum root length of seed is 2.0 cm.).

Based on the experience gained with the simple manual seeder, a second experimental seeder was built with additional features for improved seed metering, seed placement and ease of handling. Fig. 2 shows the second prototype which is equipped with a ground-driven metering device. A handle with provisions for adjustable height allows the machine to be pulled without the operator having to walk backwards. A 0.20 m x 2.0 m improved skid is used to support the machine. Small wedge-shaped furrow openers were welded under the skid to improve seed placement. A 23" diameter ground-driven wheel is used to power the metering device and to support the weight of the machine when moving on hard ground. Four narrow lugs were welded to the wheel spokes to assist in rotating the wheel under puddled conditions. The machine weighs 25 kg. The ground-driven metering device has 2 main components: a fluted roller and an adjustable seed distributor (Fig. 3). The roller accomplished the first step in metering the seeds from the hopper while the distributor took the place of the rectangular openings in the first prototype. To provide more uniform metering and to reduce mechanical damage to the seeds, a brush cut-off was installed. A wide range of adjustment in the rate of seeding is accomplished by sliding the distributor under the fluted roller.

The capacity of the seed hopper is 1.6 kg of germinated seeds (based on dry weight at 14% M.C.). This quantity is sufficient to seed a 2 m x 100 m strip in one pass.

Two plates located at the ends of the skid prevent the movement of mud to the sides. Both the end plates and the small furrow openers permit the sowing of straight rows as these reduce side movements.

At present field tests are being conducted with the second prototype

to determine its performance. In the first few trials, a maximum of 5 man-hours is needed to seed a hectare.

The modification of the second prototype seeder was primarily directed towards design simplification to facilitate fabrication by small shops. The seeder was originally designed with an adjustable seeding rate and had a small hopper for test runs. A larger hopper and a fixed seeding rate was incorporated in the modified design (Fig. 4). Seeding rate, however, can be changed in the modified machine by changing the drive sprocket. The adjustable mechanism for the pivoted handle was difficult to fabricate. It was simplified by using a simple sliding arrangement for changing handle height.

Field experiments were conducted at the Institute to compare the performance of the seeder with transplanting. Three quarter-hectare plots were puddled and fertilized with 60 kg N by mixing $(NH_4)_2SO_4$ during the final leveling operation and 20 kg N at panicle initiation. Each plot was split: one-half was planted with 21-day old IR8 seedlings spaced 25 cm apart at the rate of 2 to 3 seedlings per hill, and the other half was seeded with the 8-row seeder. Standard management and optimum pest and disease control were followed. Seed used, labor requirement, number and weight of tiller, and yield data are listed in Table 1. The data taken from average of 3 one-eighth hectare plots indicated that 4.9 man-hours are needed to seed a hectare with the 8-row seeder compared to the transplanted which required 199 man-hours. This difference shows that direct seeding with the use of the experimental seeder is about 40 times faster than transplanting. The weight and number of tillers of the transplanted plots were significantly lower than the seeded plots. This was perhaps due to relatively high rate of seeding with good growth establishment which increased plant population in the seeded plots. The yield of the seeded plot was not significantly different from that of the transplanted plots.

. . . o o o o o o 0 o o o o o o . . .

TABLE 1. Comparison between manually transplanted and mechanically seeded plots using IRRI-developed eight-row seeder. Wet season, 1969 a/

	Seed used kg/ha	Labor man-hrs/ hectare	No. of tiller mean	Tiller weight g/sq m	Yield mean
Transplanted in rows b/ (with planting guide)	45	199	249*	448**	5098
Seeded (with 8-row experimental seeder)	52	4.89 c/	460	630	5434

a/Data based on quarter-hectare plots. Soil condition: Maahas clay loam, shallow hard pan with an average depth of 5 inches. b/Job done by 8 women: 2 on the planting guide and 6 doing the transplanting. c/Labor required in operating the seeder includes placing of string 1 m away from the levee as guide for seeding straightly; also includes refilling of seed hopper with pre-germinated seeds.

*Significant.

**Highly significant.

REFERENCES

1. Catambay, A. B. 1963. Planting Methods of Rice Presently Used in the Philippines. Paper read during the Conference on "Agricultural Engineering Aspects of Rice Production," IRRI, Los Baños, Laguna, Philippines, August 11 to 15, 1963.

2. Devakul, Debriddhi. 1968. New Equipment for Rice Production Under Wet Field Conditions and Home Rice Unit Milling Equipment. Paper presented at the Fifth Session of the Working Party on Agricultural Engineering Aspects of Rice Production, Storage and Processing, Kandy, Ceylon, September 5 - 9, 1968.

3. Food and Agriculture Organization of the United Nations. 1966. Equipment for Rice Production Under Wet Paddy Conditions. Informal Working Bulletin No. 2 of the Agricultural Engineering Branch, FAO. pp. 22-26.

4. Johapulle, A. L. 1956. Row Sowing of Germinated Paddy. Trop. Agr. 112(2).

5. Johnson, Loyd. 1963. Power Requirements in Rice Production. Paper presented during the Conference on "Agricultural Engineering Aspects of Rice Production," IRRI, Los Baños, Laguna, Philippines, August 11 to 15, 1963.

6. Kamile, J. and K. Yagehashi. 1965. Studies on the Appreciation of Rice Transplanter. I - On Mitsubishi's Transplanter. (Japanese with English translation.) Bull. Aomori Agr. Expt. Sta. 10:145-155.

7. McDonald, D. V. 1961. Aerial Sowing of Rice: Test Sowing at Yanco Agricultural Research Station. 505-508.

8. Saburo, Neizeki. 1962. The "Strip Broadcast" Methods of Paddy Rice Sowing. Central Commercial Company Japanese Rice Cultivation Method. Ibaraki, Japan.

9. Thambiayah, S. 1959. Mechanical Device for Row-Sowing Rice. Trop. Agr. 115(2).

ft/ (9-5-69)

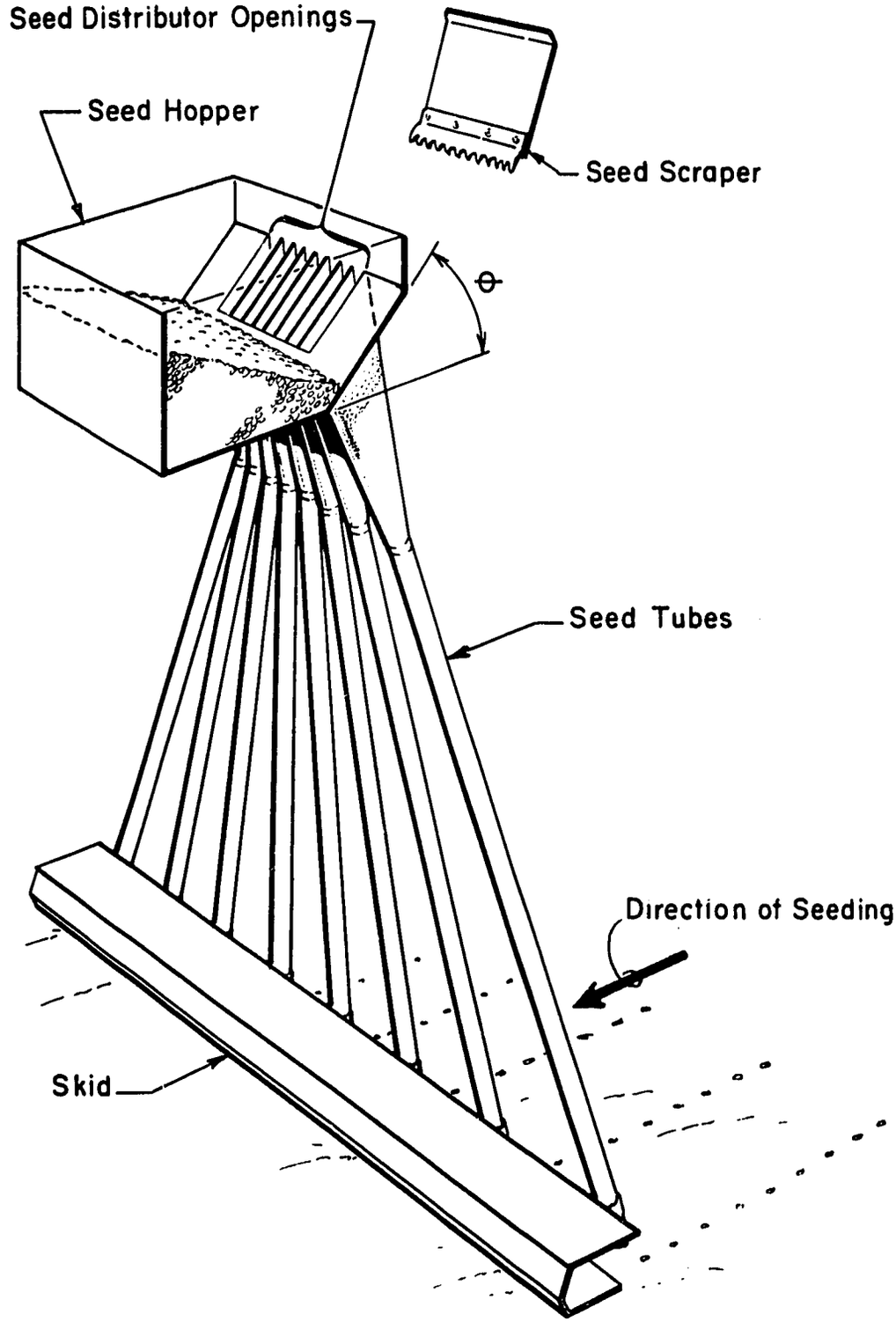

EXPERIMENTAL LOWLAND SEEDER

Fig. 1. Experimental lowland rice seeder with two-step metering arrangement (manually operated).

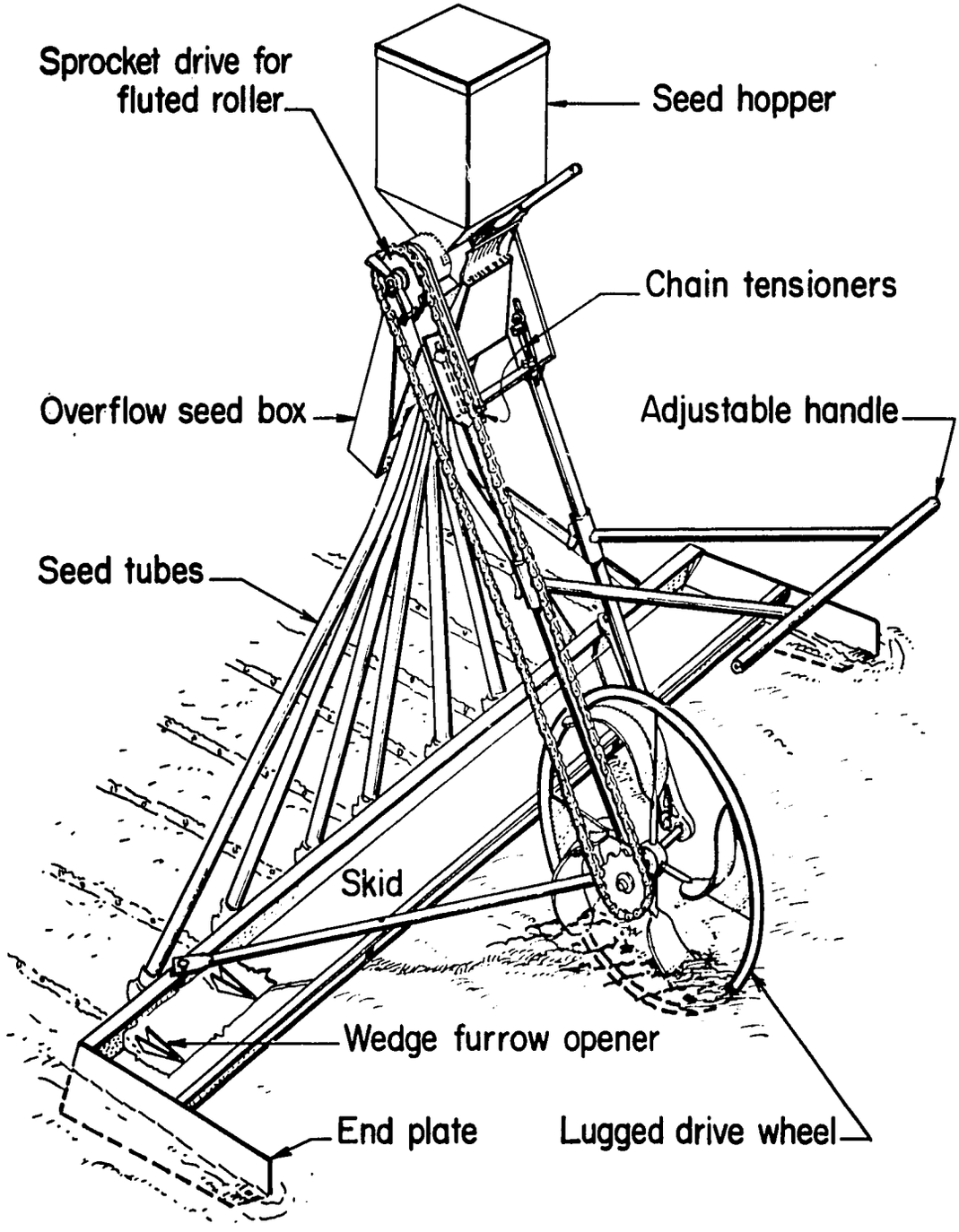

Row seeder for pre-germinated paddy

Fig. 2. Second prototype lowland rice seeder with ground wheel driven metering device.

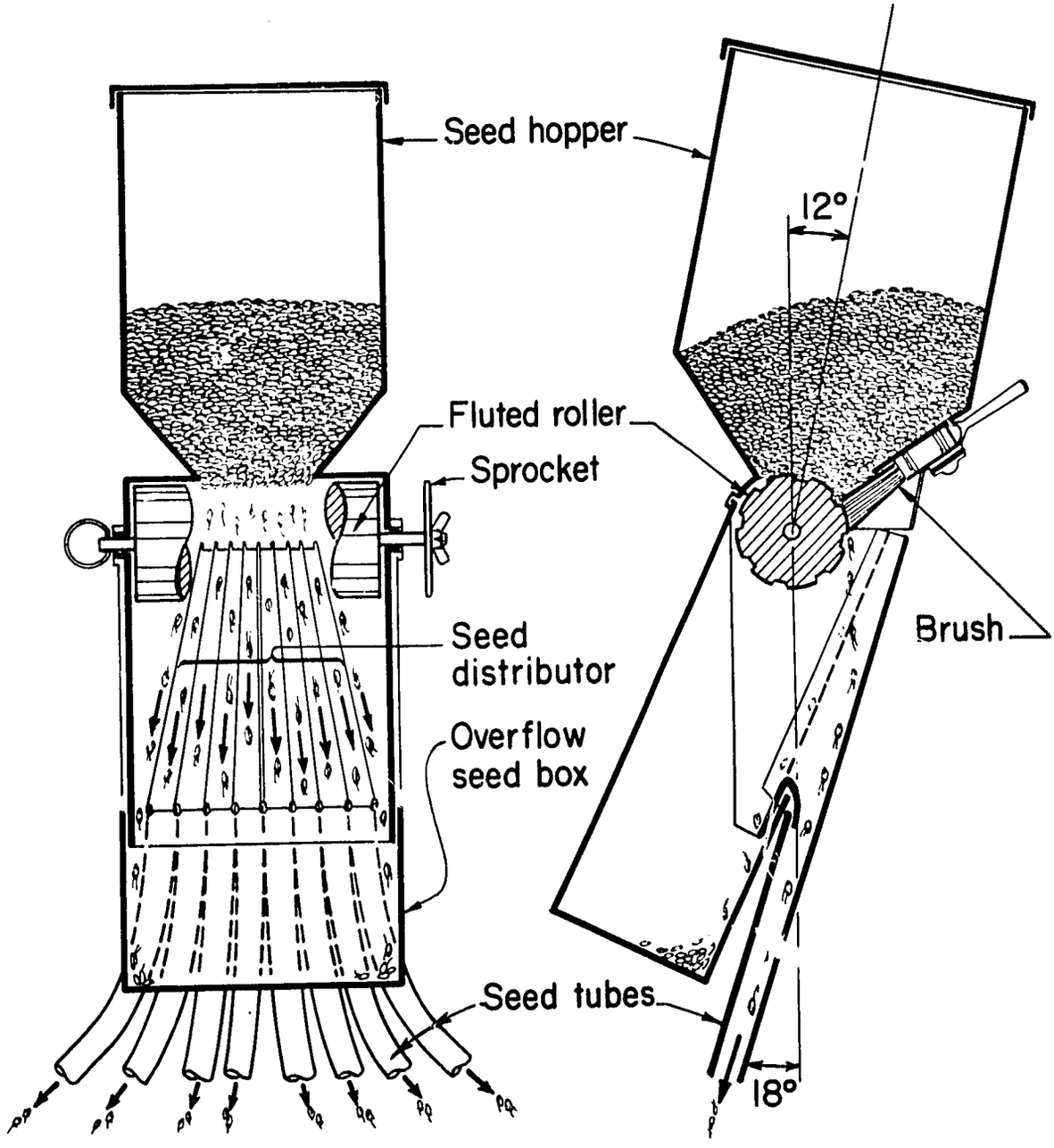

Fig. 3. Sectional views of the metering device showing the seed hopper, fluted roller, sprocket, seed distributor, excess seed bag, and seed tubes.

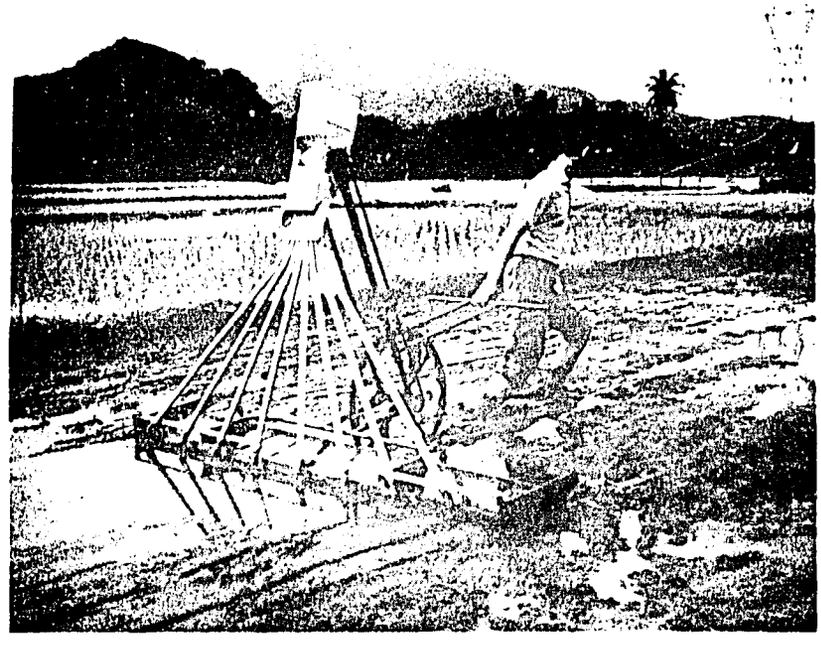

Fig. 4. Final prototype model of the eight-row seeder.