AGENCY FOR INTERNATIONAL DEVELOPMENT
WASHINGTON, D. C. 20523

BIBLIOGRAPHIC INPUT SHEET

FOR AID USE ONLY
Batch # 26

1. SUBJECT CLASSIFICATION

A. PRIMARY
Serials Y-AS10-9200-0000

B. SECONDARY
Agriculture--Food composition--Cereals and bakery products

2. TITLE AND SUBTITLE
Improving the nutritive value of cereal based foods,progress report 1969

3. AUTHOR(S)
(101) Kan.State Univ. Food and Feed Grain Inst.

4. DOCUMENT DATE	5. NUMBER OF PAGES	6. ARC NUMBER
1970	169p.	ARC 664.72.K16c

7. REFERENCE ORGANIZATION NAME AND ADDRESS
Kan.State

8. SUPPLEMENTARY NOTES *(Sponsoring Organization, Publishers, Availability)*
(Research summary)

9. ABSTRACT

10. CONTROL NUMBER	11. PRICE OF DOCUMENT
PN-RAB-489	
12. DESCRIPTORS	**13. PROJECT NUMBER**
Cereal products Soy supplements	**14. CONTRACT NUMBER** CSD-1586 Res.
	15. TYPE OF DOCUMENT

AID 590-1 (4-74)

Food Grain Drying, Storage, Handling and Transportation

Report No. 2
March 1970

Improving the Nutritive Value of Cereal Based Foods

AGENCY FOR INTERNATIONAL DEVELOPMENT
CONTRACT NO. AID/csd-1586

FOOD & FEED GRAIN INSTITUTE
KANSAS STATE UNIVERSITY

MANHATTAN, KANSAS 66502

PROGRESS REPORT NO. 2

Improving the Nutritive Value of Cereal Based Foods

Agency for International Development

Contract No. AID/csd - 1586

CONTRACTOR

The Food and Feed Grain Institute
Kansas State University
Manhattan, Kansas 66502

Submitted March 1, 1970 covering period Jan.-Dec. 1969

Improving the Nutritive Value of Cereal Based Foods

Progress Report No. 2

Table of Contents

	Page
Summary	1
Effect of Protein Level on Essential Amino Acid Requirements	2
Studies on Chick Peas	12
Chick Pea Proteins	14
Chick Pea and Pigeon Pea Processing	18
Nutritive Value of Chick Peas and Pigeon Peas	33
Effect of Heat Processing on the Nutritive Value of Chick Peas	37
Experiment I	37
Experiment II	54
Experiment III	60
Studies on Broad (Horse) Beans	61
Broad (Horse) Bean Processing	61
Effect of Processing Treatment on the Nutritive Value of Broad Beans	66
Studies on Chapatis	69
Procedures for Atta Manufacture	70
Supplementation of Atta Products with Bean Flours	73
Organoleptic Evaluation of Chapatis	76
Chapati Report I -- Fish Meal Flour	76
Chapati Report II - Cottonseed Flour	81
Nutritional Evaluation of Supplemented Chapatis	86
Rat Study I	86
Rat Study II	86
Storage Life of Chapatis and Nan	90
Studies on Cous Cous	92
Processing and Preparation	92
Organoleptic Evaluation of Cous Cous	99
Cous Cous Report I -- Broad Bean Flour	99
Nutritional Evaluation of Supplemented Cous Cous	105
Rat Study I -- Broad Bean Supplementation	105
Studies on Moroccan Bread	110
Processing and Preparation	111
Organoleptic Evaulation of Moroccan Bread	112

Effect of High Protein Supplements on the Physical Properties of Wheat Flour 117

Effect of Nonwheat Protein Supplements on the Baking Properties of Wheat Flour 120
Soy Protein Concentrate 121
High Lysine Corn Flour 122
Protein Supplements with Sucrose Esters 123

Bibliography 126

Technical Papers Resulting from Project 127b

Personnel Contributing to Project 128

APPENDIX A -- Summary of Protein and Amino Acid Composition of Raw Materials Evaluated in Project 129

Improving the Nutritive Value of Cereal Based Foods
Agency for International Development
Contract No. AID/csd -- 1586
Kansas State University

SUMMARY

Project Objective--The general objective of this research project is to improve the nutritional value of cereal based food in North Africa and Pakistan by supplementation and process modification without decreasing the food acceptability to the general consuming public in those areas.

Accomplishments during 1969--Following completion of the survey phase in 1968, the experimental phase of the project was undertaken. The analysis of the nutrient composition of grain and grain products, indigenous sources of nutrients, and supplements derived from indigenous crops has been completed.

A series of nutritional tests involving animal feeding studies are reported which will aid in establishing a nutrient standard or specification to be met by products developed in the project. Feeding studies evaluating the nutritional contribution of protein supplements, including the effect of processing conditions and product form are also reported.

Chapatis, cous cous and Moroccan bread has been prepared using standard methods developed as reference procedures. The resultant products containing various levels of several protein concentrates have been subjected to nutritional and organoleptic evaluation and the results are contained in this report.

Physical property evaluations determining the effect of supplements to the properties of wheat flour, atta, and semolina are underway. The summary of the effects of Peanut flour, Chick pea flour, Broad Bean flour, Soy Protein Concentrate, Fish Protein Concentrate, Cottonseed flour, and High Lysine Corn flour are reported.

Processing studies to develop basic raw materials and supplements undergird all phases of the work and the various sections of the report contain the results of such studies.

Values for protein content throughout this report refer to % N x 6.25. This has been applied in all cases due to the diversity of materials which have been examined.

Effect of Percentage of Food Protein in the Diet on Requirements for Essential Amino Acids

Two animal studies have been completed. In each experiment twenty-two day old weanling male albino rats were fed for a five week period. Growth and PER were determined weekly, and dry, extracted bone weight (right tibia) and bone ash (experiment 1 only) were determined at the end of the studies. Data are presented for the total 5-week period only in the figures and following sections.

In experiment 1, a 10% protein diet was prepared using a 95% extraction, stone ground, Gaines wheat flour, supplemented with vitamins and minerals to meet growth requirements. Amino acids, except lysine, were added to meet 16/20 of the NRC requirement (which is based on a 20% protein diet). Based on various studies in this laboratory over the past 5 years it is believed that this level should be adequate. Lysine was added to give a total content in the diet, including that from the flour, of 0.31 to 0.78%.

The data obtained are shown in Figures 1 and 2. Based on growth and PER, a level of approximately 0.51% lysine in this diet appears to give optimum performance. Based on weight of the dry extracted bone, the figure seems to be a little lower, perhaps 0.50%. The rats grew more, and as efficiently, when fed the experimental diet as when fed the 10% casein diet containing the same quantity of lysine. The PER even on the diet containing 0.46% lysine is considered good. Tibia bone ash weights were essentially the same at all lysine levels; thus this determination has no value for establishing the lysine requirement in this diet. Comparison of growth and dry bone weight suggests that the ratio of these values might be useful as an indicator of degree of fattening relative to physiological body size. This might be a useful figure.

In experiment two, 7%, 10% and 13% protein diets were prepared from a similar Gaines 95% extraction flour, as in experiment one. In this experiment, corn starch was mixed with the flour to prepare the 7% protein diet, and wheat gluten was used to increase protein of another diet to 13%. In the 10 and 13% protein diets, pure amino acids were used to increase the levels of all essential amino acids, except lysine, to 16/20 of the NRC requirement. This required the addition of seven amino acids, mostly in quite small quantities, to the 10% diet and 2 amino acids to the 13% diet. A problem was encountered in designing the 7% protein diet. If amino acids were added to increase the quantities to 16/20 of requirement, so much of each was required that the protein equivalent of the diet was considerably over 7%. If the amount of flour is reduced so that together with added amino acids one has a 7% diet, it becomes self defeating; the quantity of wheat flour used is reduced considerably. By adding supplemental amino acids at 10/20 of the requirement, only 4 essential amino acids were needed. The wheat flour supplied 6.9% protein and the added amino acids brought the diet to 7.1% protein equivalent. Lysine of the diets was 0.4, 0.5, 0.6, 0.7%.

The data are in Figures 3, 4 and 5.

With 7% protein, even 0.4% lysine seems to give as good growth and PER, as larger quantities of lysine. In fact, 0.7% lysine may have caused a toxic imbalance. It is noted that PER's are good, but with the poor growth merely means the protein fed was used efficiently.

Growth on 10% and 13% protein diets was almost identical, but with more protein in the 13% diet, PER's were not so good. These data suggest that 0.6% lysine or a little less would have given optimum performance. Since only four levels of lysine were used in the diets, the requirement cannot be established more definitely. In general, the dry bone weight data (Figure 6) support the growth and PER data.

The Major Finding in this study was that in 10 or 13% protein diets, based on a wheat flour in which all necessary vitamins and minerals are supplied and supplemented with other essential amino acids to meet at least 16/20 of the NRC requirement, only 0.5 to 0.6% lysine was needed for growth, not 0.9%, as shown by NRC tables. In the 7% protein diet, 0.4% lysine seems to have been as effective as larger amounts.

The use of the Kakade and Liener method (1) for available lysine has been studied. This is a modification of Carpenter's method (2) in which 2, 4, 6-trinitrobenzene sulfonic acid reagent is used instead of fluoro-dinitrobenzene. The method was claimed to be simpler and rapid (reduces the analysis to about one-half the time) and requires a smaller correction, especially for foods high in carbohydrate. Available lysine is defined as lysine-containing residues which have free ε-amino groups. The ε-amino group of lysine may react with carbohydrate, gossypol, possibly lipid and other organic molecules to form bonds not hydrolyzed by animal enzymes, thus making lysine unavailable to the animal.

A series of products have been treated at 150°C, dry heat, with and without added carbohydrate to check out the method and obtain research data on available lysine as well (Table 1).

Table 1. Calculated available lysine in gm/100 gm protein

Protein	Heated at 150°C, hours							
	0		0.5		2		8	
	No CHO	CHO* added	No CHO	CHO added	No CHO	CHO added	No CHO	CHO added
Casein	6.25	5.28	6.15	5.18	5.00	4.30	3.24	3.10
Fish prot. conc.	5.50	4.04	5.50	4.04	4.92	3.20	3.14	1.16
α-protein	4.30	3.64	4.30	3.50	3.66	3.04	2.46	2.42
N.F. dried milk	--**	2.06	--	1.03	--	0.86	--	0.26
Wheat gluten	2.80							
Zein	0.30							

* Glucose added in wt. equal to protein sample
** Product contains lactose

Heating 2 to 8 hours decreases available lysine of all samples. Whereas casein is fairly pure, the fish protein is high in mineral, α-protein contains some higher carbohydrates, and wheat gluten, some starch. This may account in part for lower values from heat treatments. When carbohydrate was added there was considerable decrease in available lysine at both 2 and 8 hours.

A similar study with moist heat and autoclaving is under way. A few samples of processed chick peas have been analyzed, with results on available lysine tending to verify data collected in rat growth tests. See Table 2.

It appears that this procedure might be used on various protein-containing foodstuffs for screening for available lysine and effect of different processing treatments. If so, nutritional investigations can be conducted more quickly. This procedure also may help discover the physics and chemistry of processing which make the products of greater nutritive value.

Table 2. Available lysine of processed chick peas

Product	Available lysine, g/100g.
Chick peas, raw	2.0
Chick peas, popped	3.36
Chick peas, steamed 15 min	1.88
Chick peas, steamed 30 min	1.89
Chick peas, roasted 15 min	2.00
Chick peas, roasted 30 min	1.68

Growth data on rats clearly indicates that probably on a good balanced protein, 10% or a little more is all that is needed in the diet. We should do a study similar to experiment 2 using 10, 15 and 20% protein. We might profitably use 10, 15, and 20% wheat flour diets and compare effects with and without amino acid supplementation. This work brings a 20% protein

and 0.9% lysine requirement into question. The work suggests that greater attention should be paid to the total nutritional pattern, rather than 20% protein, 0.9% lysine, etc.

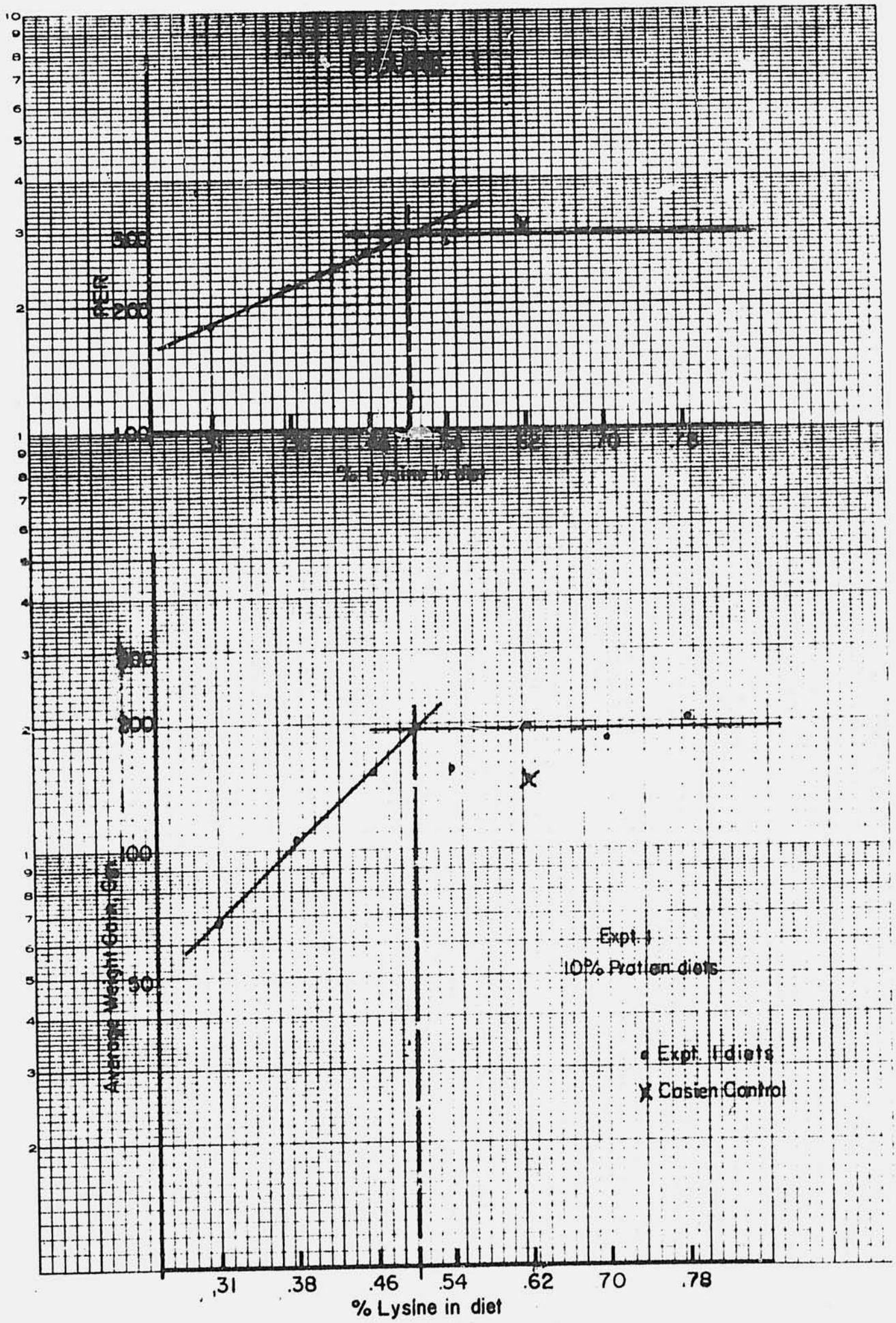
Average Weight Gain, Gm.
300
200
100
50
.31
.38
.46
.54
.62
70
.78
% Lysine in diet
Expt. I
10% Protein diets
Expt. I diets
Casein Control

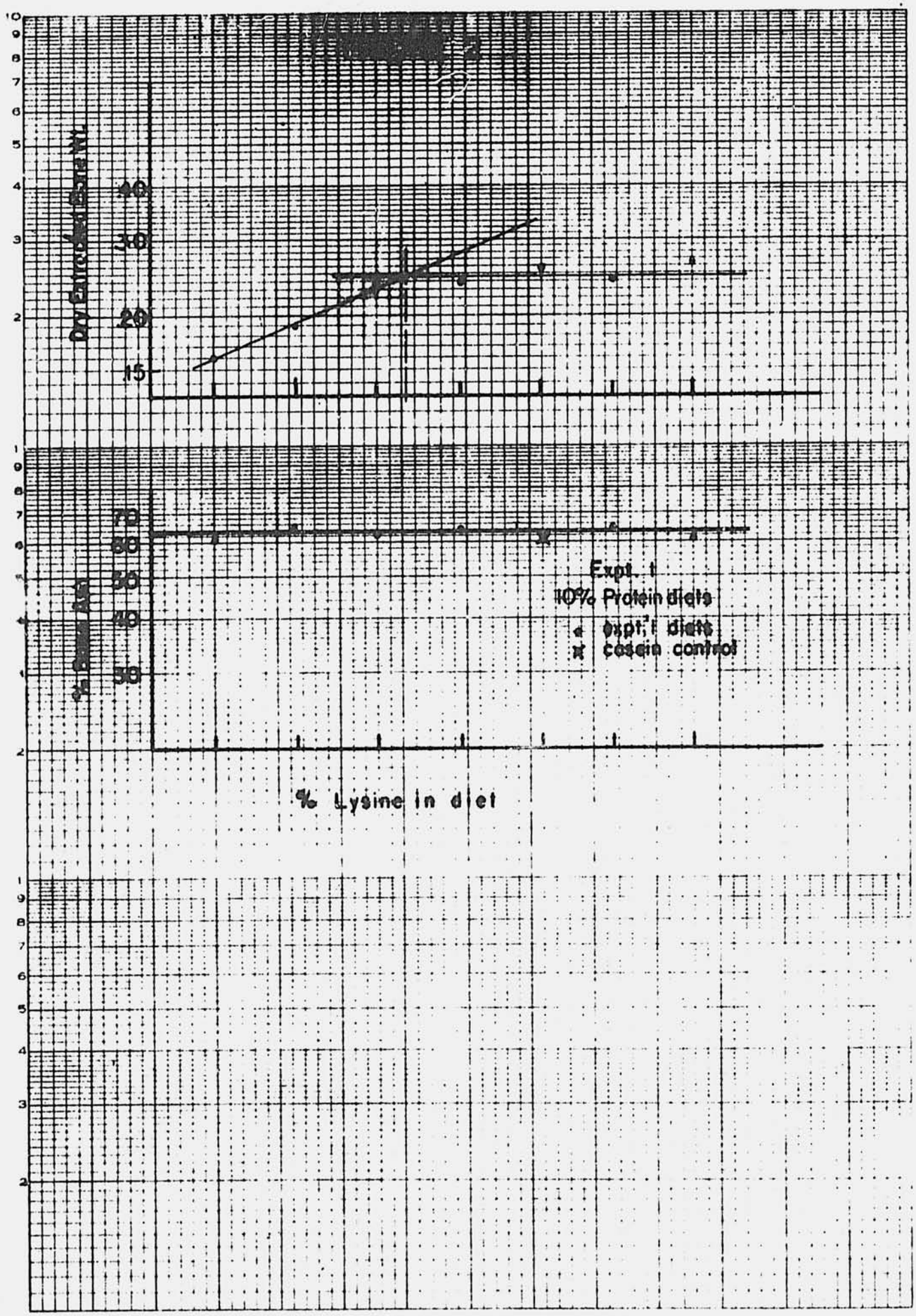
Dry Extracted Screenings
40
30
20
15
% Gum Arab
70
60
50
40
30
Expt. 1
10% Protein diets
expt. 1 diets
casein control
% Lysine in diet

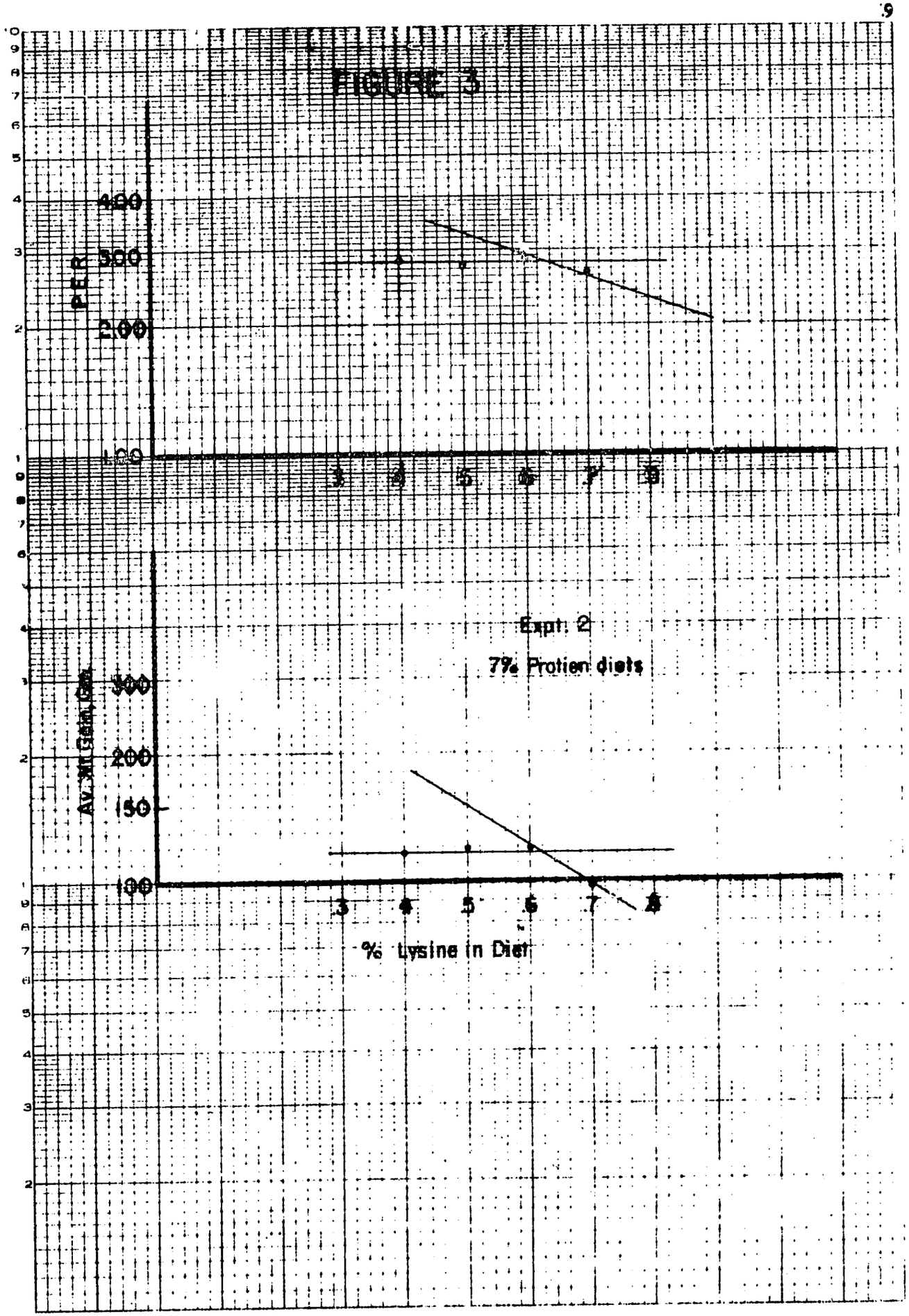
FIGURE 3
PER
400
300
200
100
3
4
5
6
7
8
Expt. 2
7% Protien diets
Av. Wt Gain, Gms.
300
200
150
100
% Lysine in Diet

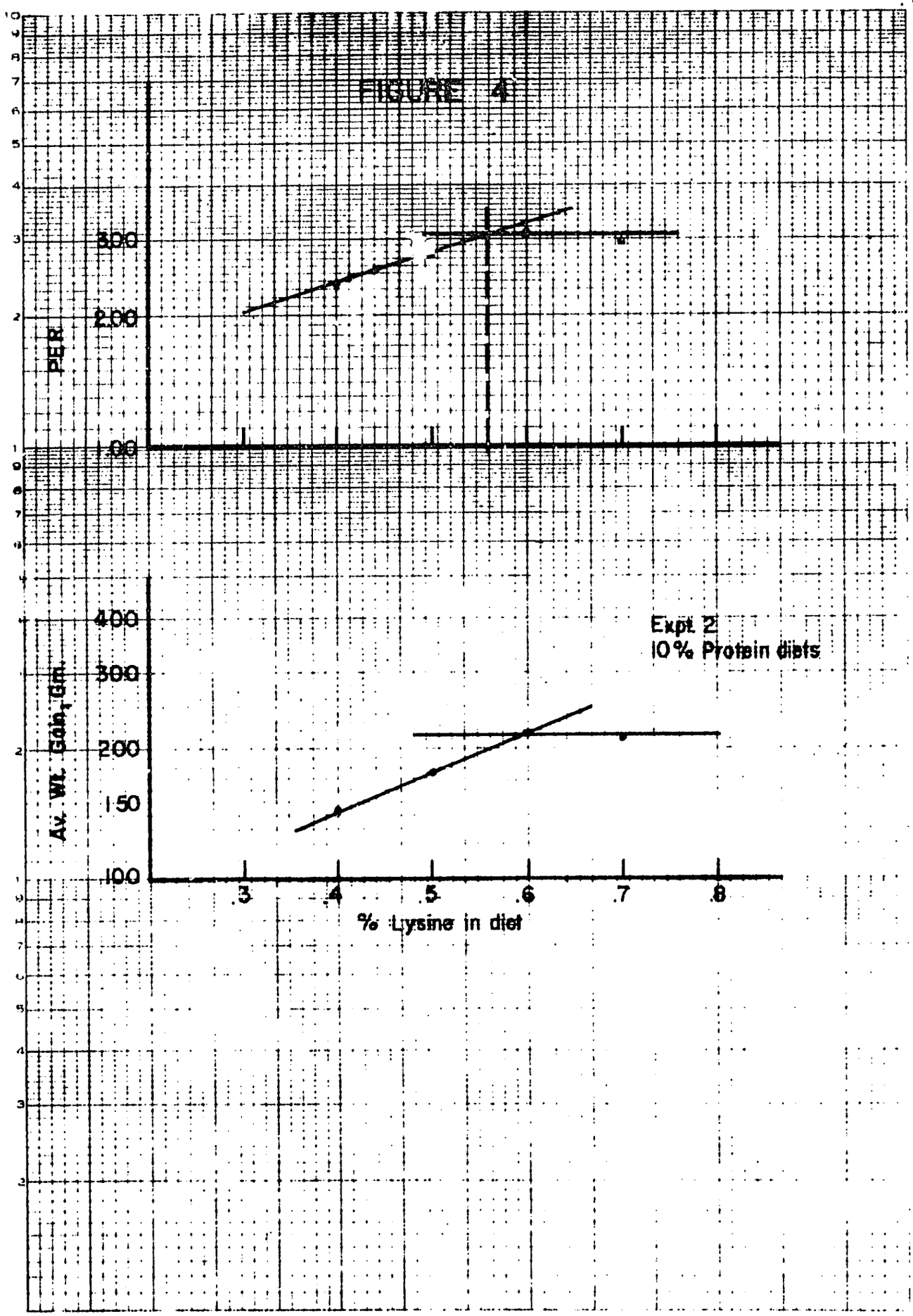
FIGURE 4
PER
300
200
100
Av. Wt. Gain, Gm.
400
300
200
150
100
Expt. 2
10% Protein diets
.3
.4
.5
.6
.7
.8
% Lysine in diet

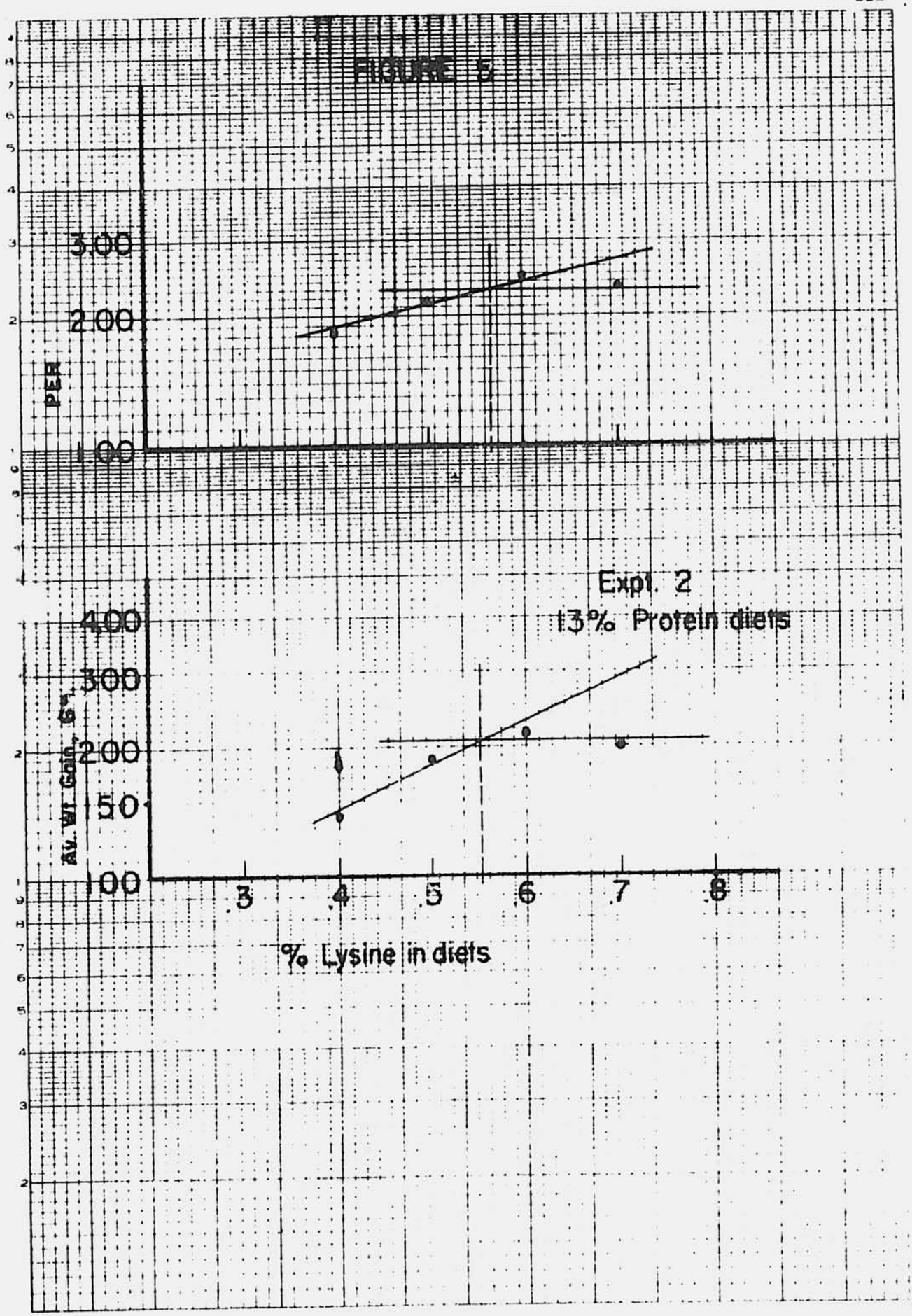
FIGURE 5
3.00
2.00
1.00
PER
Expt. 2
13% Protein diets
400
300
200
150
100
AV. Wt. Gain, Gm.
.3
.4
.5
.6
.7
.8
% Lysine in diets

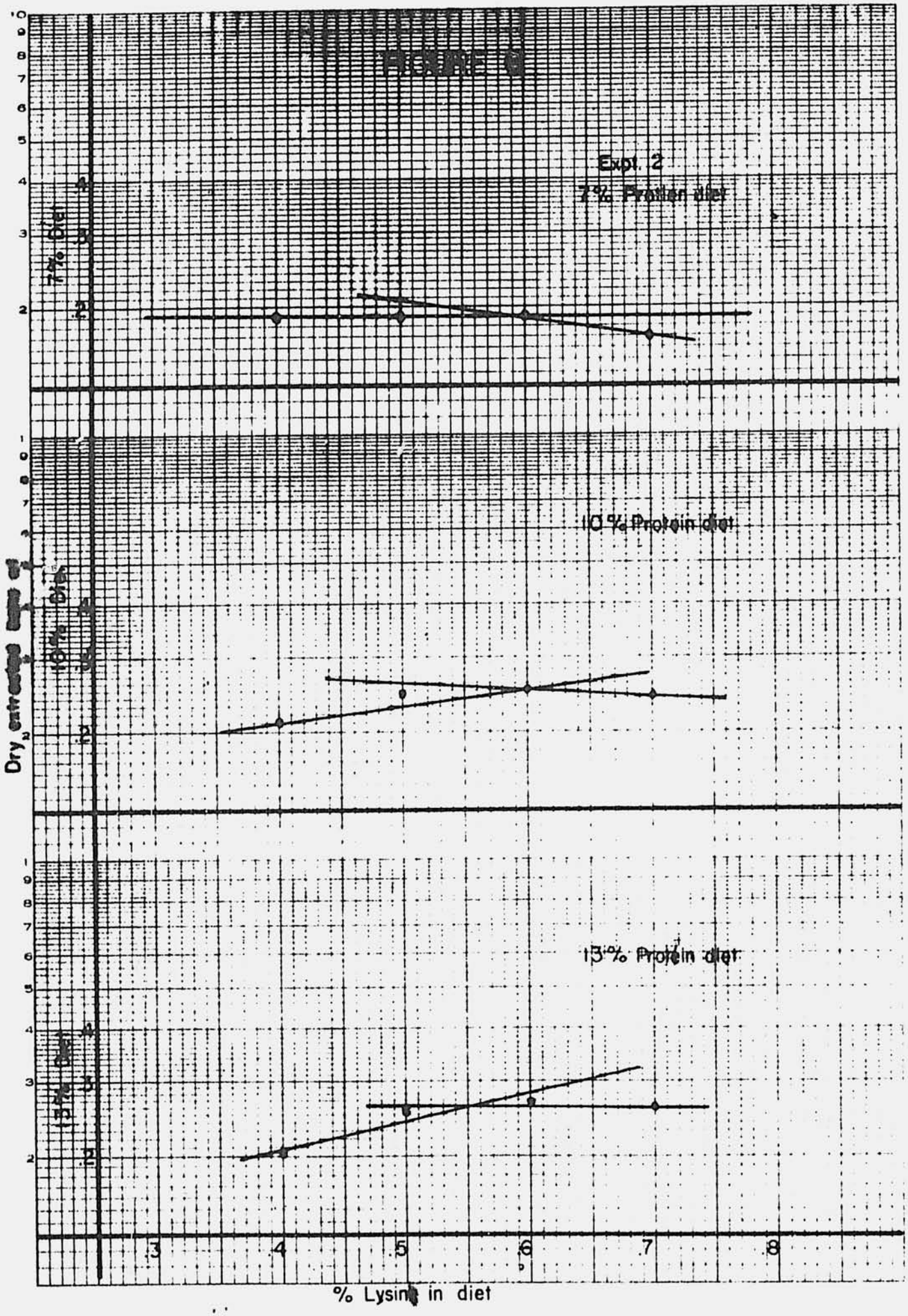
Figure 6
Expt. 2
7% Protein diet
10% Protein diet
13% Protein diet
7% Diet
10% Diet
13% Diet
Dry extractable lipids of
% Lysine in diet
.3
.4
.5
.6
.7
.8

Studies on Chick Pea Protein

Chick peas (*cicer arietinum*) are also known as Bengal grams, "chana" in India, "kommos" in Near East, "garbanzo" in Latin American countries. The legume is widely used in these areas and is a source of protein and vitamin of considerable importance. As a food supplement, the chick pea is superior to some other legumes due to its relatively bland odor and lack of detrimental effects on the texture and other physical characters of food when proper amounts of chick pea flour or meals are added to them. The chick pea is high in available carbohydrate content (60%) and the protein content (about 20%, % N x 6.25) is slightly lower than most pulses and beans used in the same areas. Nevertheless, the value is still far greater than that of cereals. The fat content (5%), though not as high as groundnuts, soybean and other oil seeds, is considerably higher than cow pea, broad beans, lentil, and various kinds of *phaseolus* pulses, such as kidney beans and mung beans. It is, therefore, conceivable that the chick pea can be a significant source of essential fatty acids for those people whose diet consists mainly of cereals.

As in other legumes, a number of antinutritional factors have been reported in chick peas. These include the trypsin-inhibiting factor, hemagglutinin and cyanogenic glycosides. For the most part, the growth-inhibiting effects of these factors are expected to be eliminated by proper heat-treatment. However, conflicting results have been reported regarding the effects of heat-treatment. Some workers (Hirwe and Magar, (3), Idem (4), and Adolph *et al.*, (5)) reported increases in the protein efficiency ratio (PER) of chick pea protein after cooking or autoclaving; some others reported heat-treatment did not increase the nutritive value of chick pea protein (Esh and Sorn, (6), Esh (7), Acharya *et al.*, (8));

still others reported a decrease of biological value after heat-treatment (Blaizot (9)). The decrease in protein efficiency may be due to the fact that chick pea protein is low in sulfur-containing amino acids, and heat destruction of choline would be expected to aggravate these deficiencies (Jiminez and Vivano (10)).

Preliminary work done at the Department of Grain Science and Industry, K.S.U., indicated chick peas can be successfully incorporated into several bread-type food products used in Near East and India-Pakistan areas. Amino acid analysis of the chick pea samples from the area confirmed the previous reports that methionine is the first limiting amino acid in chick pea protein (0.184 - 0.23% sample), and as in most of the studied legume seed proteins, the total sulfur-containing amino acids content was also low (0.39 - 0.54%). Nevertheless, these figures compare favorably with those of other beans and pulses used in the same areas, e.g., kidney beans and mung beans; and are greater than those of lentils, garden peas, and broad beans, even though the other legumes have slightly higher crude-protein contents than chick peas. The lysine content is high, as are several other essential amino acids. By proper supplementation with synthetic methionine or other proteins which are higher in methionine and S-amino acids, the nutritive value of chick pea protein could be improved. Sesame seeds, which are produced in large quantities in the same areas, could be a promising supplement for chick pea blends, owing to its exceptional richness in methionine.

Although much research work on the protein of soybeans, groundnuts, peas, navy beans, kidney beans, etc. had been done, few studies on the protein of chick peas have been published. Mathur _et al._, (11) extracted protein from chick pea seeds by methods described by Osborne (12). The protein fractions were hydrolyzed by HCl and amino acid distributions

were studied by paper chromatography. They reported 26% of the total protein extracted by water, while 67% by 10% NaCl solution and 7% by 0.2% KOH. No alcohol extractable proteins were reported. Amino acid distribution in various protein fractions were of limited value due to the techniques used, which allowed large margins of errors. In addition in several cases, the amino acid spots in their studies failed to separate on paper and the totals were reported. Nevertheless, they reported that KOH soluble proteins had a high percentage of cysteine-plus-lysine, and methionine-plus-tryptophan, while saline extractable proteins were rich in arginine and glutamic acid.

Some of the objectives of the present work at the Department of Grain Science and Industry, K.S.U., are to study:

1. The conditions of concentrating and/or extraction of chick pea protein.
2. The amino acid distribution of various protein fractions and nutritional implications.
3. The nature of growth inhibiting factor(s) in chick peas and their elimination.

Conditions of Concentrating and/or Extraction of Chick Pea Protein

Chick peas were dehulled and ground at the experimental mill at the Department of Grain Science. Sieving tests of the chick pea flour produced indicated all particles passed through an 85-mesh screen and 50% + passed through a 100-mesh screen. The flour was defatted by extraction with Skelley F in a Soxhlet extractor for 48 hours. The fat-free flour was desolventized and exposed to the room atmosphere overnight, then stored in air tight jars. Analysis of the samples of the defatted product showed the moisture content was 12.25% and N content was 3.57%. If protein

is expressed as % N x 6.25 in this case, protein content was 22.3% (as-is basis), or 25.5% (moisture free basis).

A series of experiments on extraction of the proteins from defatted chick pea flours were conducted and the following procedure was selected for all subsequent experiments. Five grams of defatted flour was weighed and placed in a 250 ml centrifuge bottle to which 100 ml extractant was added. The bottles with their contents were shaken on a horizontal shaker for 1 1/2 hours; then centrifuged at 1120 x g for 20 minutes. The supernatants were decanted and centrifuged again at 25,000 x g for 20 minutes to remove the fine suspended particles.

The extractants used included water, 0.5M NaCl, 0.1M HCl, and .1M NaOH. Also used were HCl and NaOH at other concentrations. Nitrogen recovery was determined by micro-Kjeldahl methods (AOAC 10th Ed.).

1. Effect of repeated extractions:

Each sample was extracted repeatedly three times at the stated ratio (20:1). The N-recovered was calculated and results tabulated as follows.

Extraction Time	Water as extractant		0.5m NaCl as extractant	
	% N Extd from sample	% total N extracted	% N Extd from sample	% total N extracted
1st	70.0	82.8	78.1	88.3
2nd	11.4	13.5	8.4	9.5
3rd	3.2	3.7	1.9	2.2
Total	84.6	100.0	88.4	100.0

It was found that the first extraction removed most of the N from the sample, and virtually all the extractable N was removed from the sample after 2 or 3 extractions.

The saline solution was expected to extract more N than H_2O and it was found to be true. However, the results differed from those reported by Mathur et al., (11) who reported 26% of N extracted from defatted chick pea flour by water. (They didn't state the extractant sample ratio, nor the granulation of sample and extracting conditions.) These findings were similar to results of N-extraction from other legume seeds. (Altschul (14), Fontaine & Burnett, (15)).

2. Extraction of N-constituents by acid and base: (using HCl and NaOH).

Results of HCl extractions:

Concentration HCl (m)	% N extracted in the 1st extraction
10^{-1}	77.1
10^{-2}	19.2
$5x10^{-3}$	19.3
10^{-3}	46.3
$5x10^{-4}$	58.4
10^{-4}	64.8

It appeared that the N-extracted decreased at first as acidity increased; then increased sharply at high acid.

Results of NaOH extraction:

Concentration NaOH (m)	% N extracted in the first extraction
10^{-1}	93.2
$5x10^{-2}$	93.2
10^{-2}	90.9
$5x10^{-3}$	87.0
10^{-3}	82.2

Alkaline extraction appeared to be a more effective method to remove N from the sample than acid, neutral or salt extractions. The extracts were also less likely to form precipitates in cold storage.

3. Recovery of protein from extracts:

Several methods were tested for precipitation of the protein from extracts. Best results as far as quantity was concerned, was obtained when the chick pea flour was extracted by $5x10^{-2}$m NaOH and then the extract was acidified to precipitate the protein. At least 85% of the total N in the extract was precipitated, and the remainder in the whey fraction is probably composed mainly of free amino acids, peptides and other non-protein N compounds. The protein can be readily separated from whey by centrifugation and freeze-drying. Acid precipitation of protein after neutral extraction by water or salt solution was also tested. The yields were smaller than for the alkaline extract. Nevertheless, proteins in the neutral extracts are probably not as denatured as those in alkaline extracts.

Also tested were dialytic and trichloroacetic acid precipitations. Dialysis precipitated a large amount of saline soluble protein ("globulous") which appeared to be abundant in chick pea extract. The protein recovered would be expected not to be extensively denatured. Trichloroacetic acid precipitation appeared to be very effective in removing all the protein from solution. When an equal volume of TCA (1 N) is added to the chick pea extract, over 90% of total N was precipitated from solution.

Chick Pea and Pigeon Pea Processing

Procedures for the manufacture of flour from chick peas have been developed and are depicted in flow sheets AID-F-6, AID-F-13, AID-F-14, AID-F-15, AID-F-16, AID-F-18, AID-F-21, AID-F-22, AID-F-23, AID-F-25, AID-F-26, AID-F-29, and AID-F-30. The procedure for pigeon pea flour is given in AID-F-20.

The resultant flours have been used for the nutritional studies on chick peas and the forthcoming nutritional and organoleptic studies on cous cous, chapatis, and Moroccan bread.

Chick Pea Processing

Chick Pea Flow

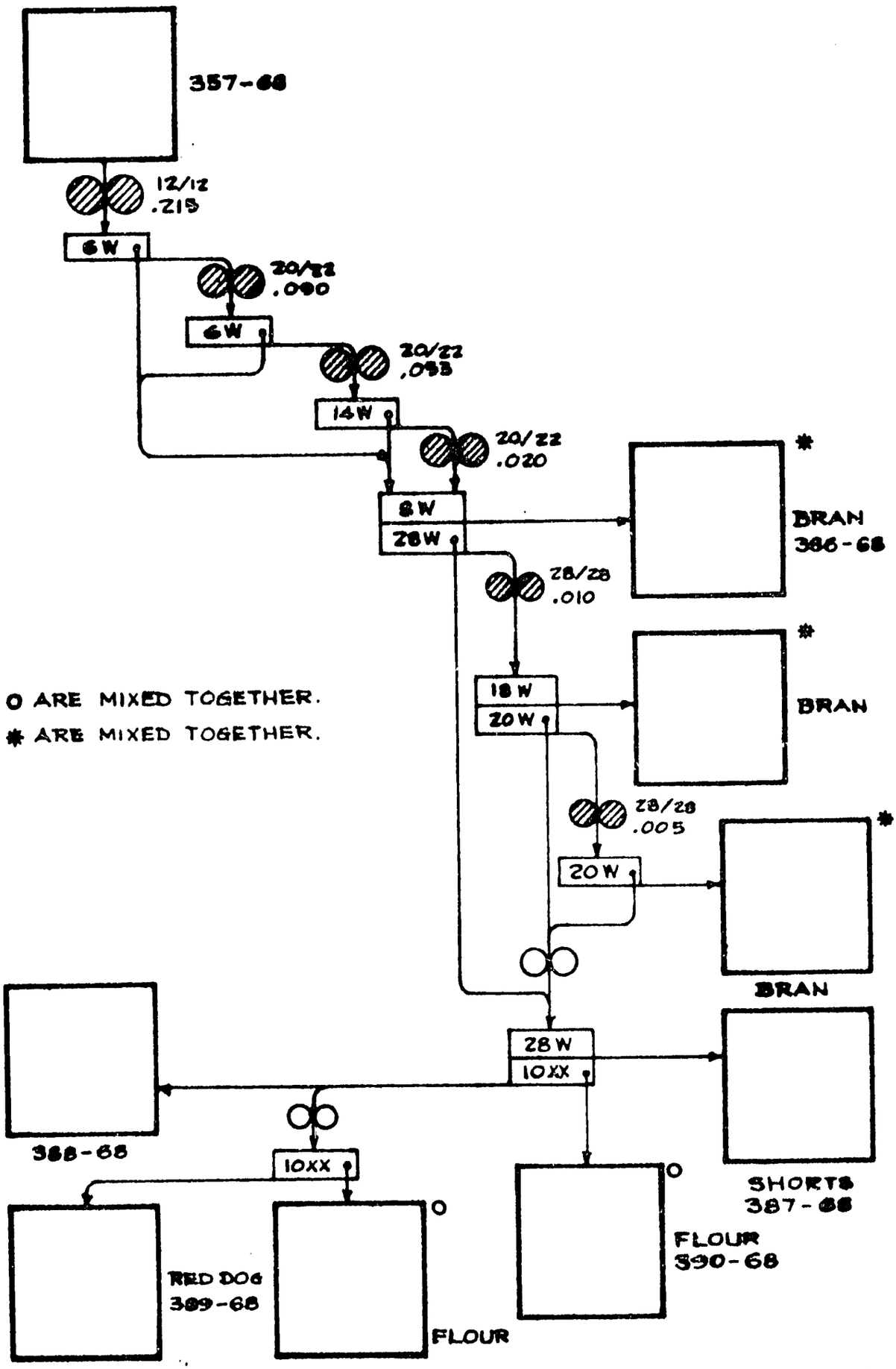

KSU KANSAS STATE UNIVERSITY *Manhattan, Kansas 66502*

CURRICULUMS IN
MILLING TECHNOLOGY
FEED TECHNOLOGY
BAKERY MANAGEMENT

DEPARTMENT OF GRAIN SCIENCE AND INDUSTRY
MILLING INDUSTRIES BUILDING

CHICK PEA FLOW

BANO SAMPLE CP-69

06-05-06-69

HULLS REMOVED

		GRAMS	%
001-69	FLOUR	2271	91.8
002-69	HULLS	203	8.2
		2474	

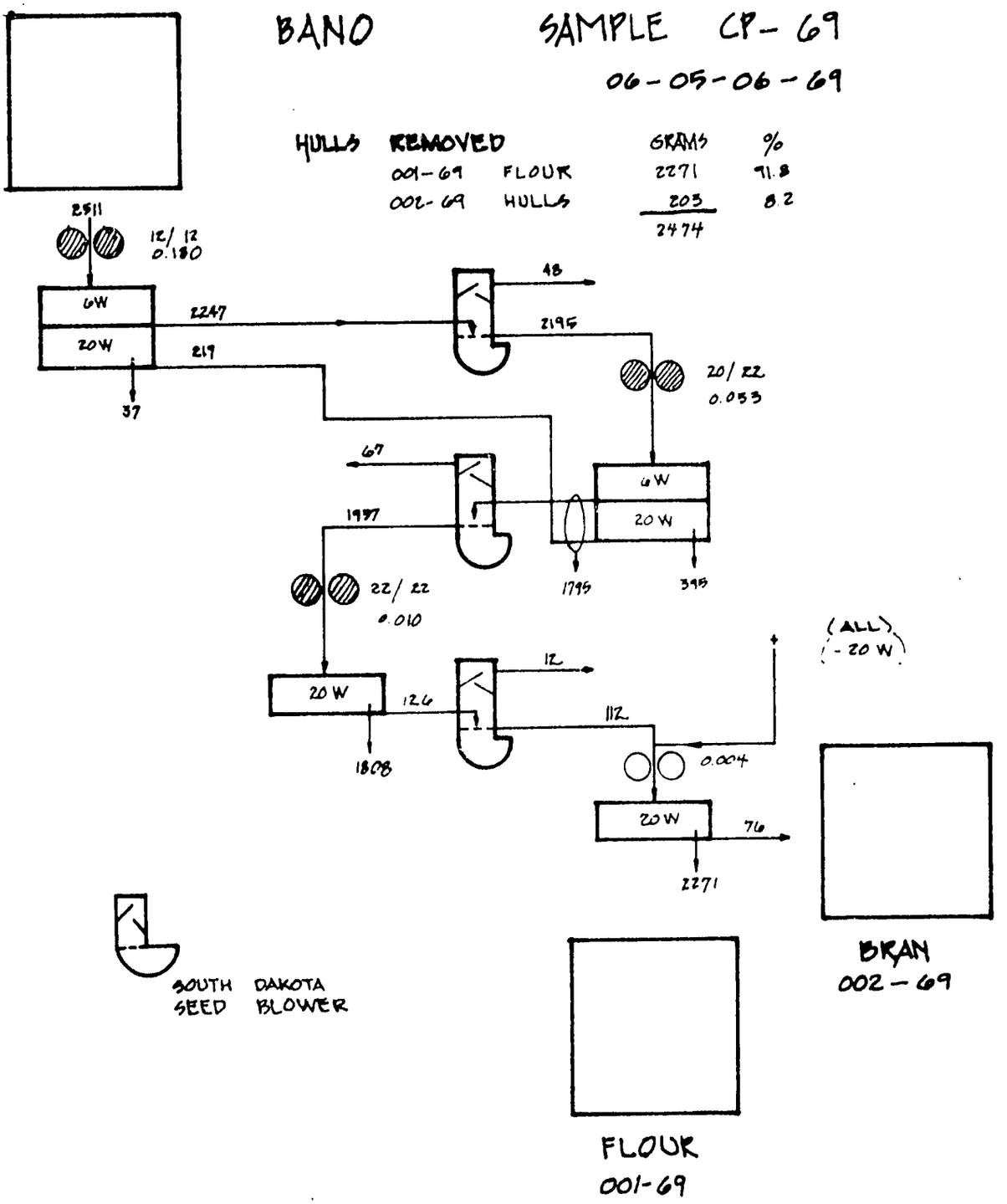

KANSAS STATE UNIVERSITY Manhattan, Kansas 66502

CURRICULUMS IN
MILLING TECHNOLOGY
FEED TECHNOLOGY
BAKERY MANAGEMENT

DEPARTMENT OF GRAIN SCIENCE AND INDUSTRY
MILLING INDUSTRIES BUILDING

CHICK PEA FLOW

SAMPLE B (CK – 69)

GRAMS 003-69 MEAL 2428 + 270 = 2698

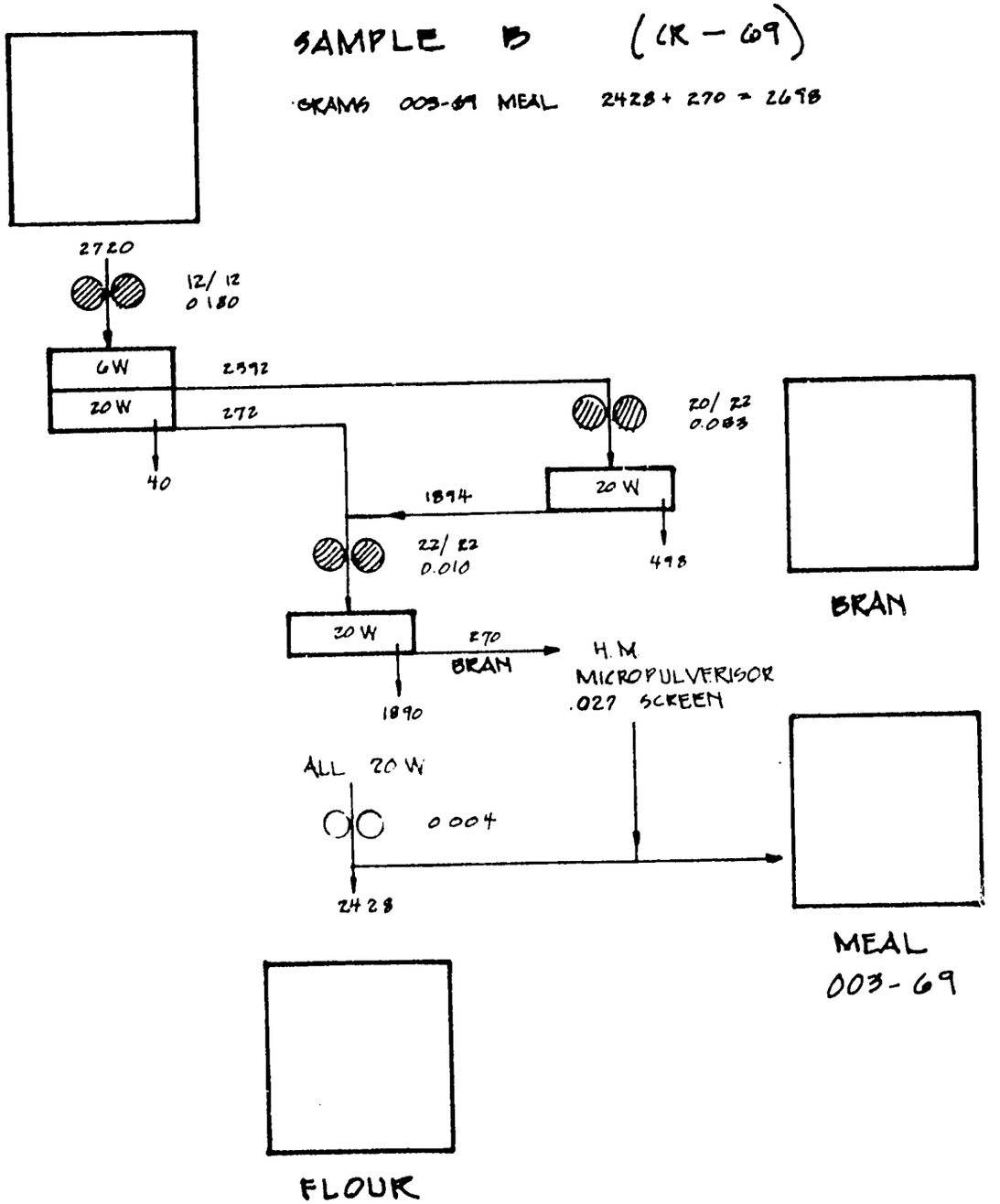

AID-F-15

KANSAS STATE UNIVERSITY *Manhattan, Kansas 66502*

CURRICULUMS IN
MILLING TECHNOLOGY
FEED TECHNOLOGY
BAKERY MANAGEMENT

DEPARTMENT OF GRAIN SCIENCE AND INDUSTRY
MILLING INDUSTRIES BUILDING

CHICK PEA FLOW

SAMPLE A (CR1 - 69)

004 - 69 MEAL 2536 + 100 = 2636 GRAMS

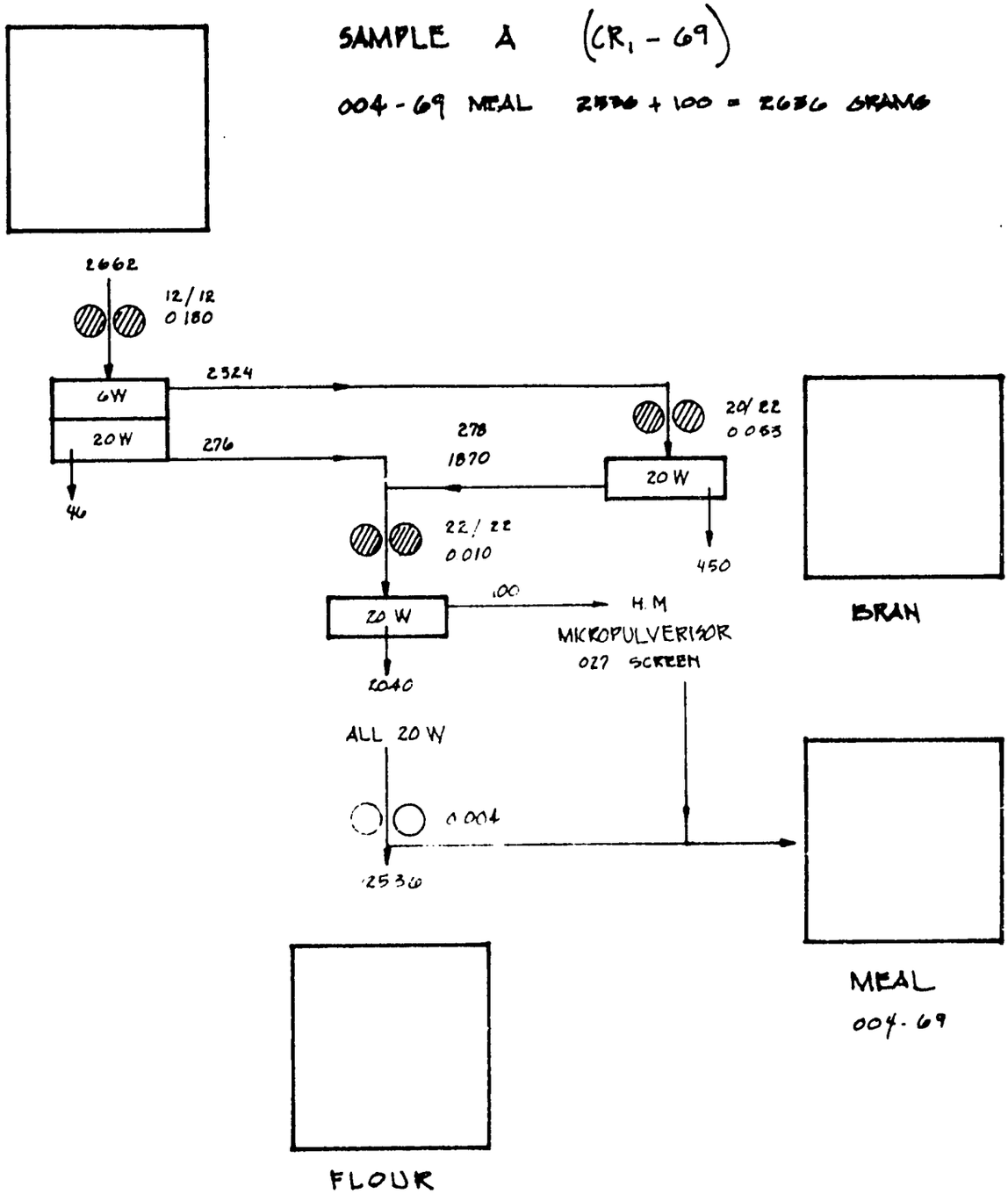

AID-F-16

KANSAS STATE UNIVERSITY Manhattan, Kansas 66502

CURRICULUMS IN
MILLING TECHNOLOGY
FEED TECHNOLOGY
BAKERY MANAGEMENT

DEPARTMENT OF GRAIN SCIENCE AND INDUSTRY
MILLING INDUSTRIES BUILDING

CHICK PEA FLOW

SAMPLE CS, — 69

005-69 MEAL 2592 + 268 = 2660

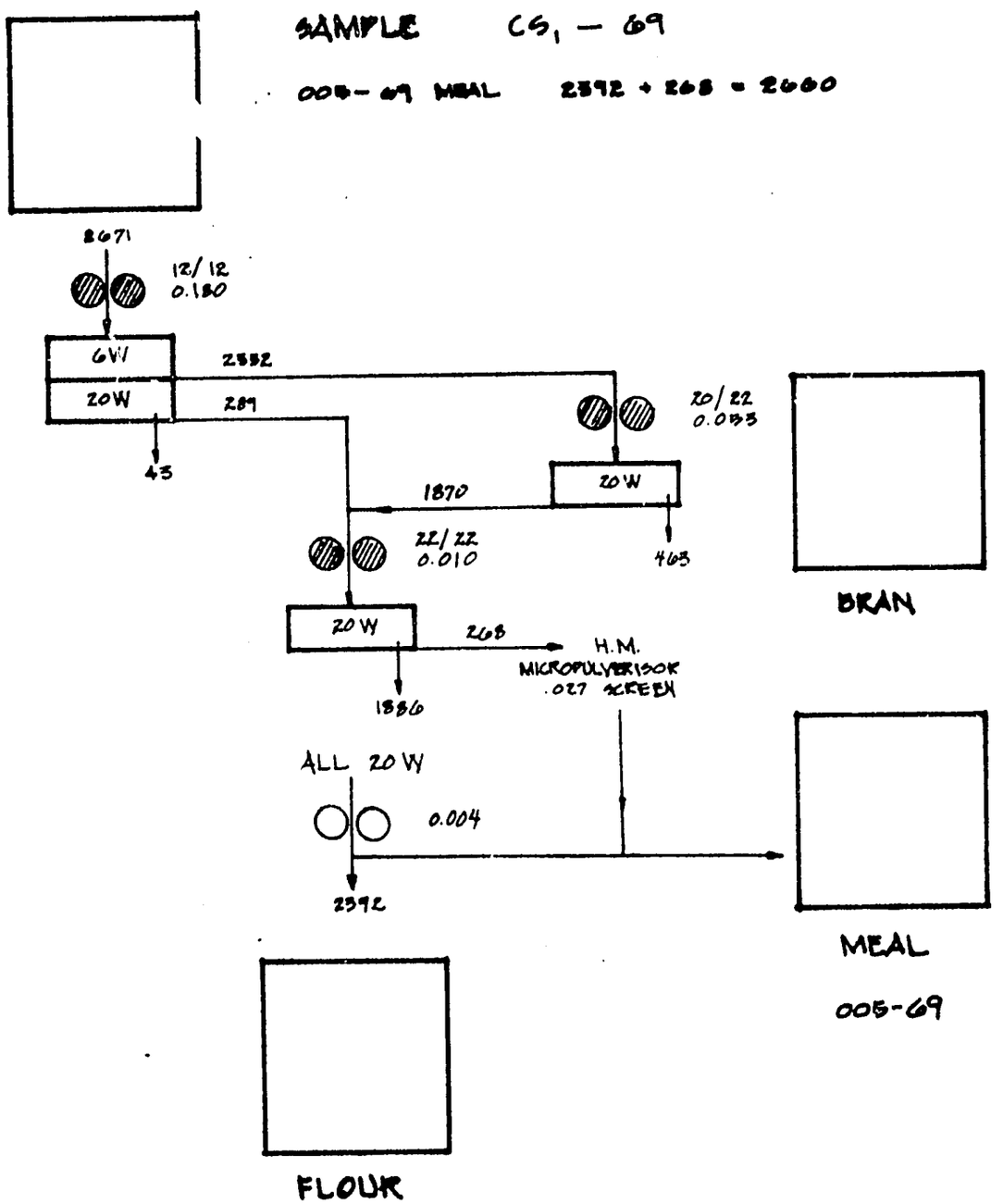

KSU KANSAS STATE UNIVERSITY *Manhattan, Kansas 66502*

CURRICULUMS IN
MILLING TECHNOLOGY
FEED TECHNOLOGY
BAKERY MANAGEMENT

DEPARTMENT OF GRAIN SCIENCE AND INDUSTRY
MILLING INDUSTRIES BUILDING

AID-F-18

CHICK PEAS FLOW 06-10-69

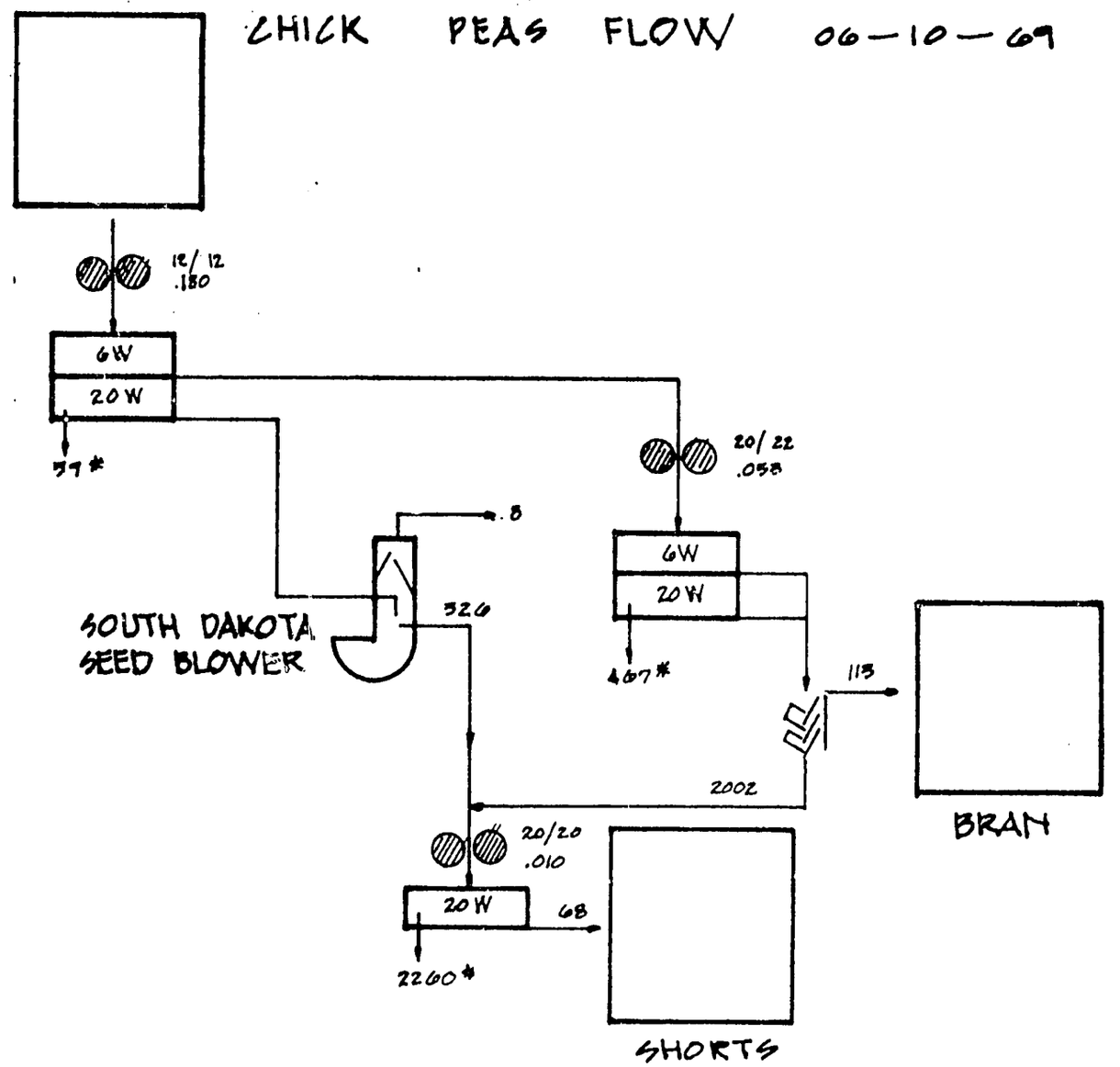

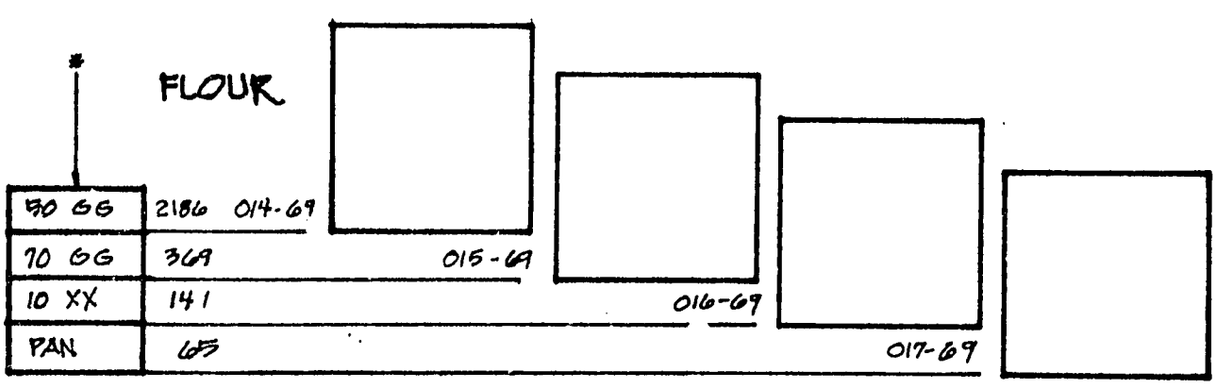

AID-F-21

KANSAS STATE UNIVERSITY Manhattan, Kansas 66502

CURRICULUMS IN
MILLING TECHNOLOGY
FEED TECHNOLOGY
BAKERY MANAGEMENT

DEPARTMENT OF GRAIN SCIENCE AND INDUSTRY
MILLING INDUSTRIES BUILDING

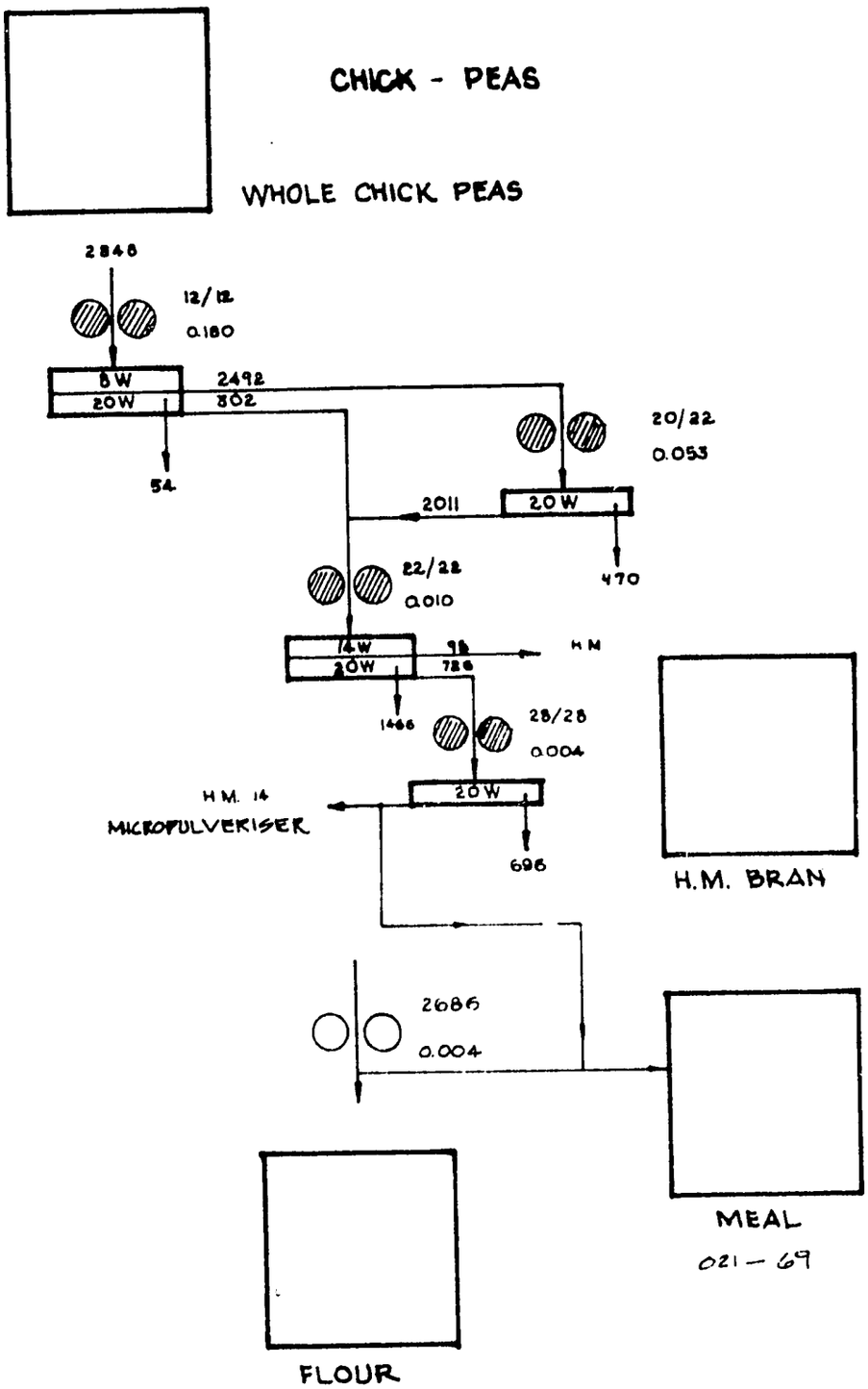

AID-F-22

KANSAS STATE UNIVERSITY Manhattan, Kansas 66502

CURRICULUMS IN
MILLING TECHNOLOGY
FEED TECHNOLOGY
BAKERY MANAGEMENT

DEPARTMENT OF GRAIN SCIENCE AND INDUSTRY
MILLING INDUSTRIES BUILDING

BENGAL GRAMS

CP-69

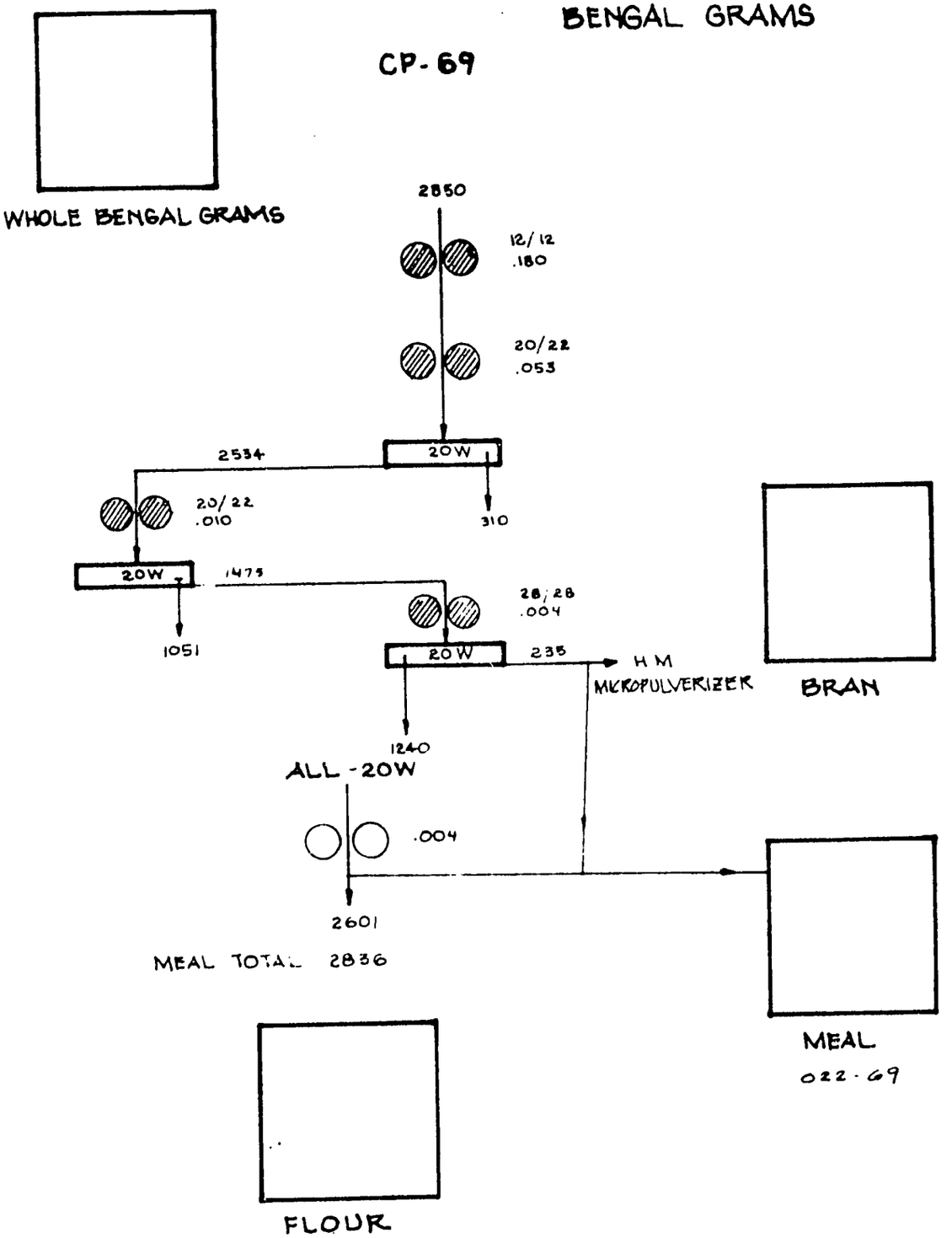

AID-F-23

KSU KANSAS STATE UNIVERSITY Manhattan, Kansas 66502

CURRICULUMS IN
MILLING TECHNOLOGY
FEED TECHNOLOGY
BAKERY MANAGEMENT

DEPARTMENT OF GRAIN SCIENCE AND INDUSTRY
MILLING INDUSTRIES BUILDING

CHICK PEA FLOW 07-28-69 07-29-69

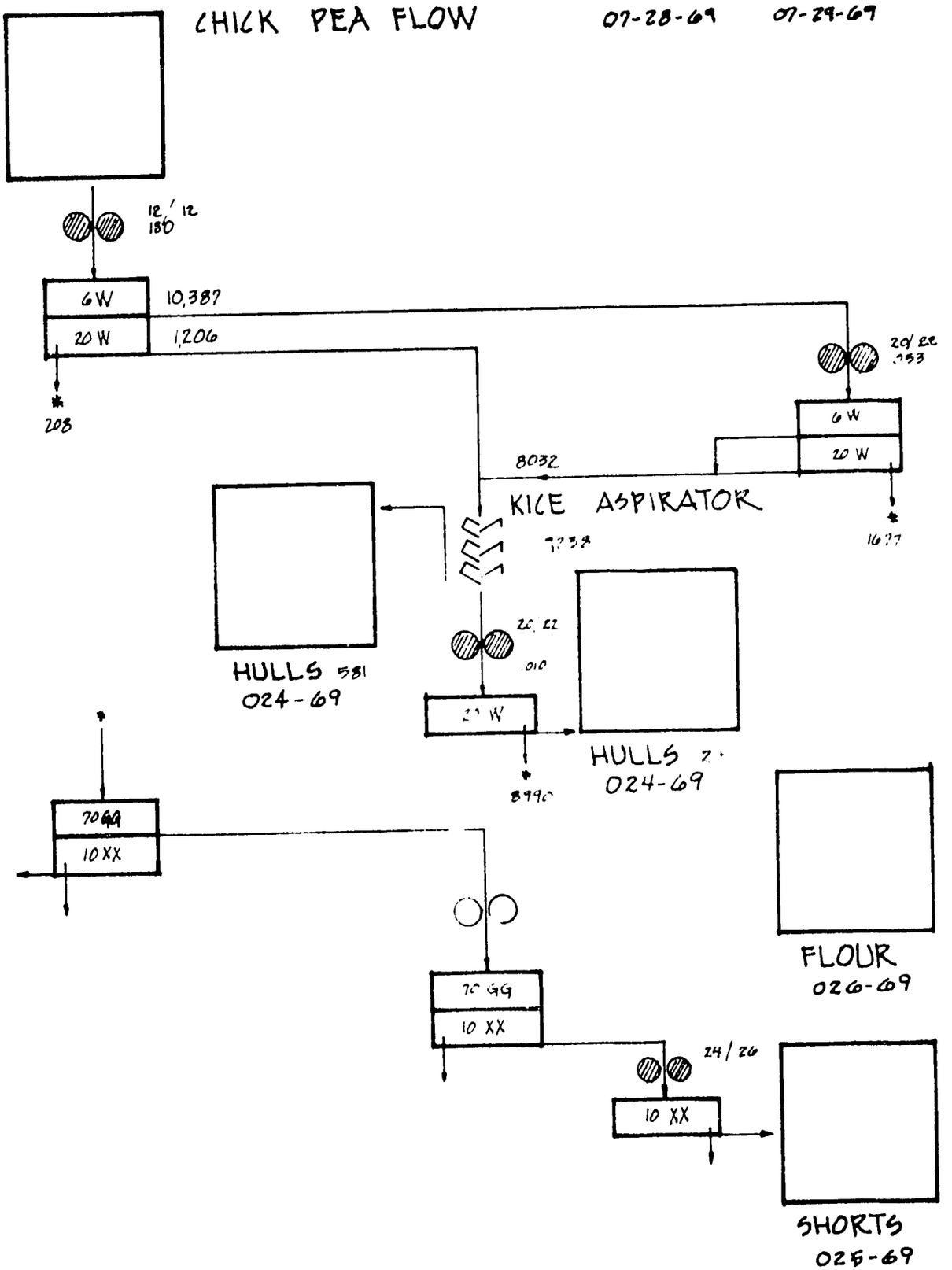

AID-F-25

KANSAS STATE UNIVERSITY Manhattan, Kansas 66502

CURRICULUMS IN
MILLING TECHNOLOGY
FEED TECHNOLOGY
BAKERY MANAGEMENT

DEPARTMENT OF GRAIN SCIENCE AND INDUSTRY
MILLING INDUSTRIES BUILDING

CHICK PEA FLOW

SAMPLE C (CR2 - 69)

MEAL GRAMS 2160 + 218 = 2378

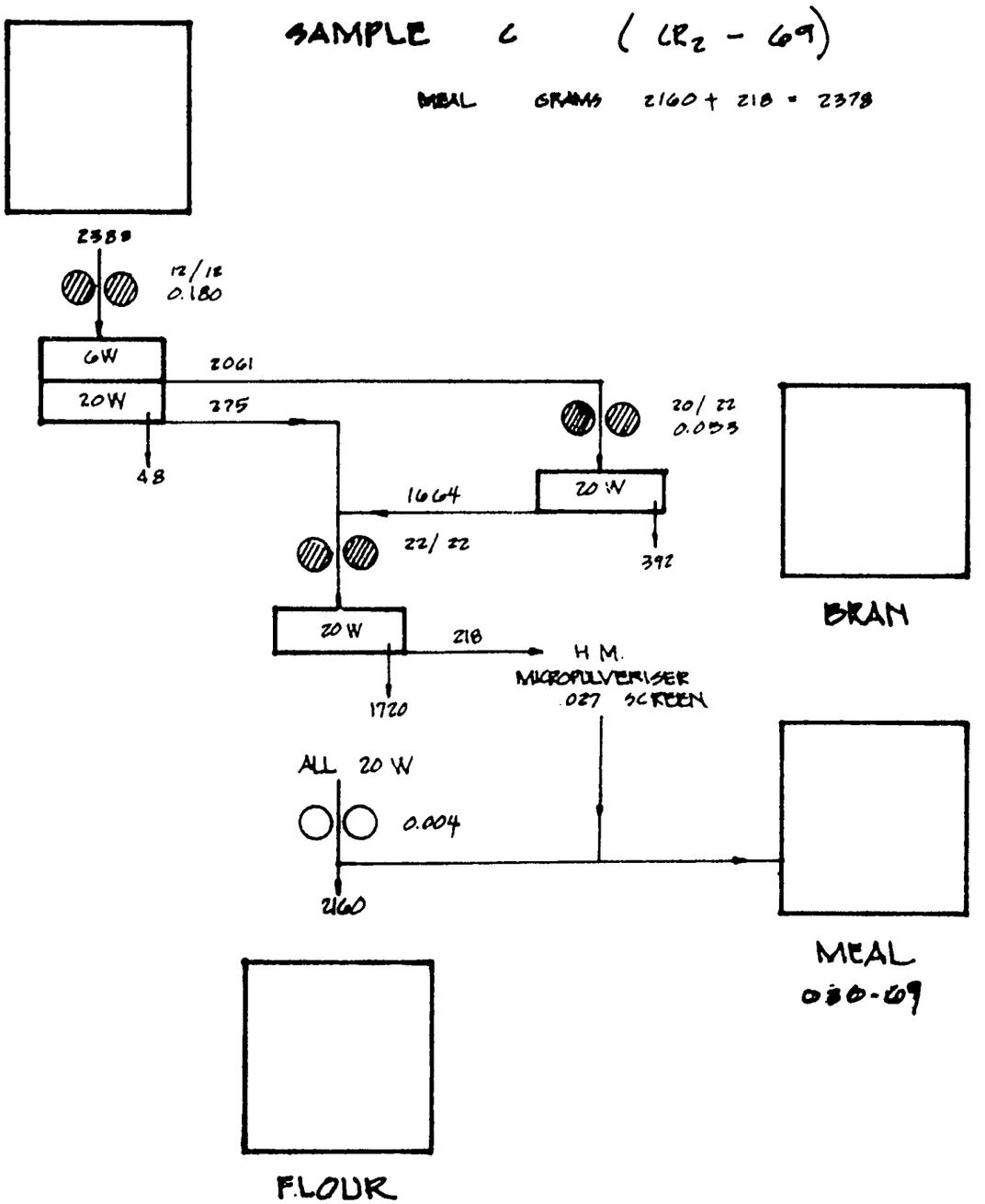

AID-F-26

KSU KANSAS STATE UNIVERSITY *Manhattan, Kansas 66502*

CURRICULUMS IN
MILLING TECHNOLOGY
FEED TECHNOLOGY
BAKERY MANAGEMENT

DEPARTMENT OF GRAIN SCIENCE AND INDUSTRY
MILLING INDUSTRIES BUILDING

CHICK PEA FLOW

SAMPLE CS_2 — 69

MEAL 2389 + 286 = 2675 GRAMS

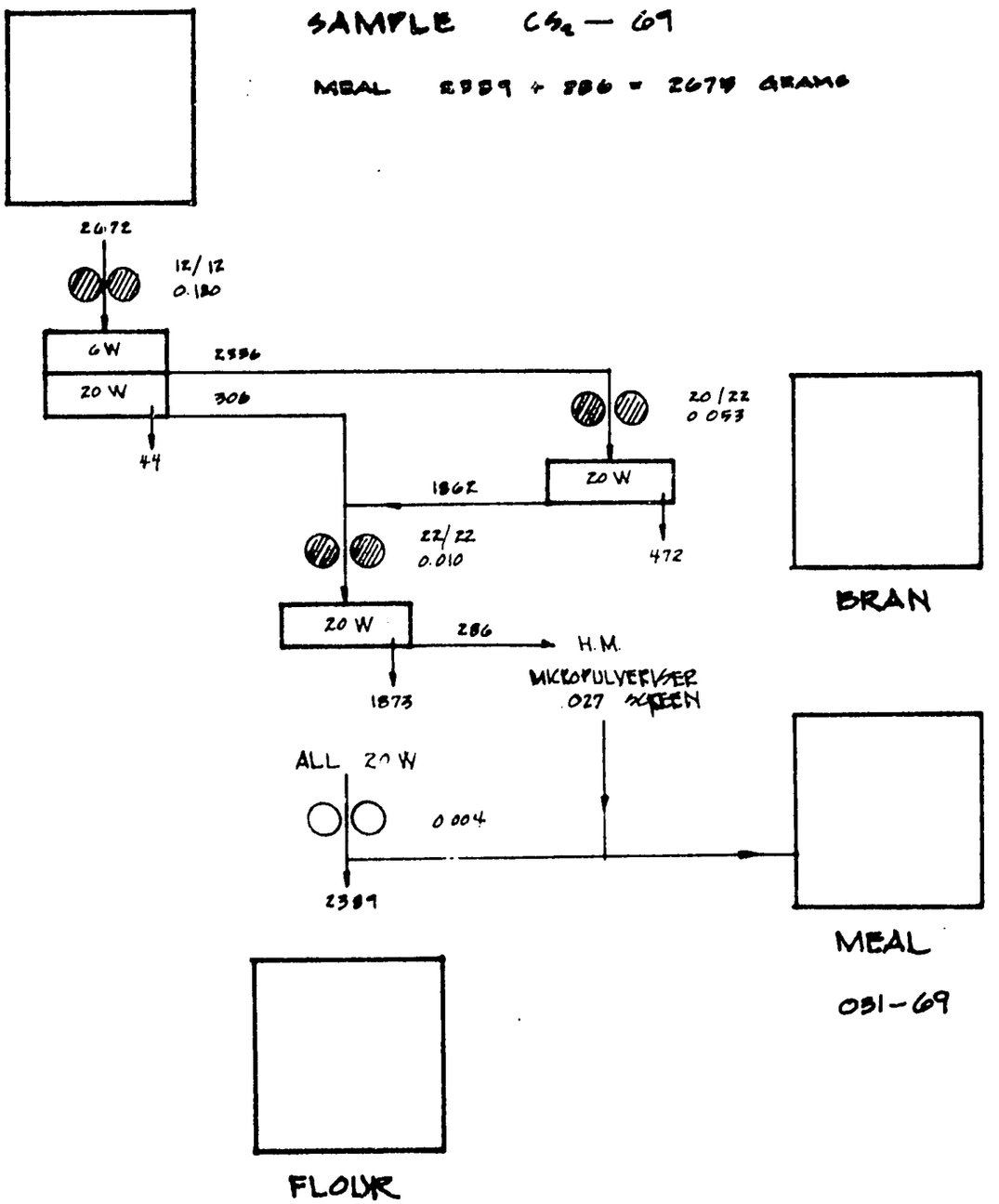

KANSAS STATE UNIVERSITY *Manhattan, Kansas 66502*

CURRICULUMS IN
MILLING TECHNOLOGY
FEED TECHNOLOGY
BAKERY MANAGEMENT

DEPARTMENT OF GRAIN SCIENCE AND INDUSTRY
MILLING INDUSTRIES BUILDING
TELEPHONE: 532-6861

CHICK PEA

AID F-29

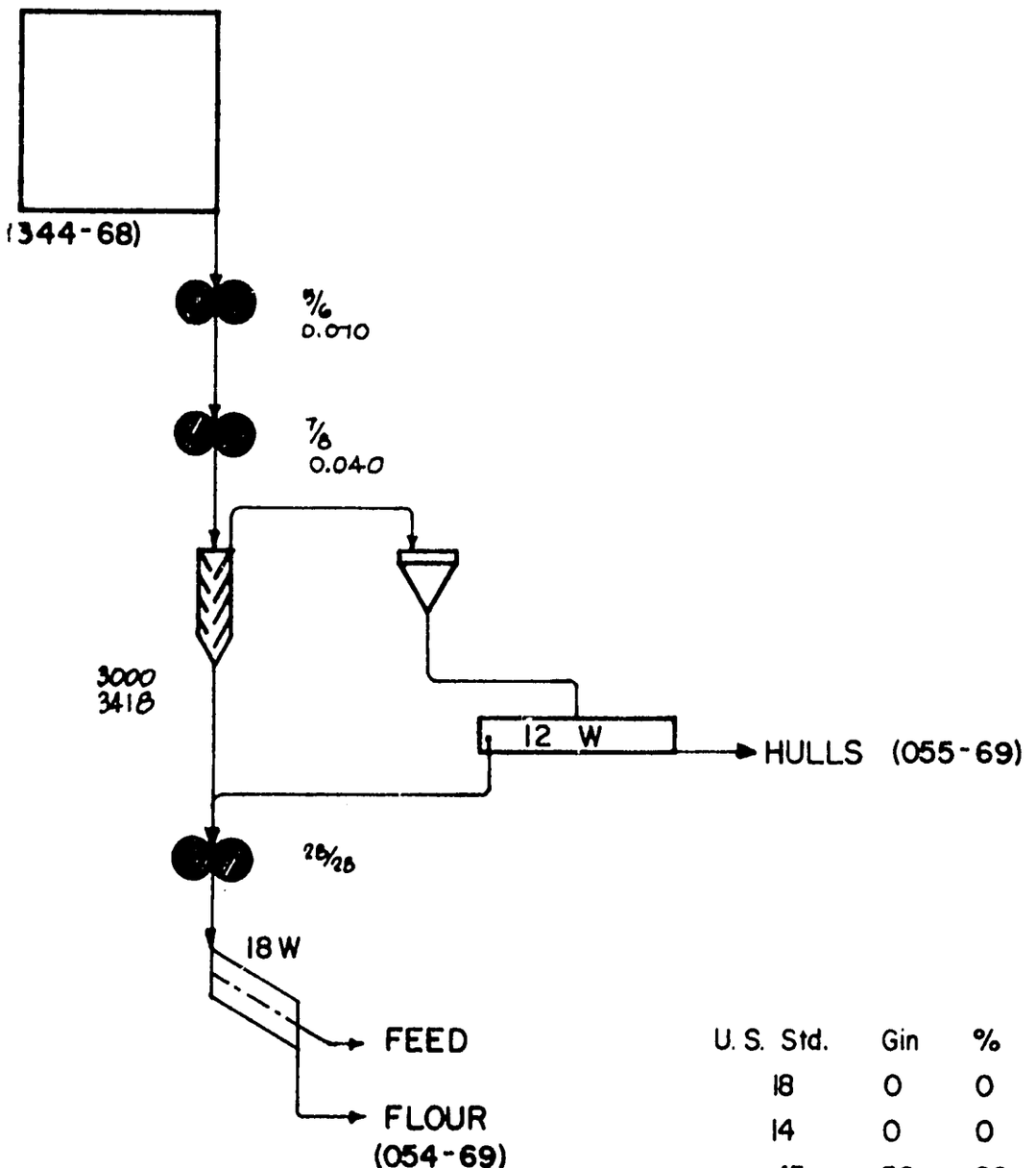

U. S. Std.	Gin	%
18	0	0
14	0	0
45	52	26
80	98	50
PAN	47	24

KANSAS STATE UNIVERSITY *Manhattan, Kansas 66502*

CURRICULUMS IN
MILLING TECHNOLOGY
FEED TECHNOLOGY
BAKERY MANAGEMENT

DEPARTMENT OF GRAIN SCIENCE AND INDUSTRY
MILLING INDUSTRIES BUILDING
TELEPHONE: 532-6561

AID F-30

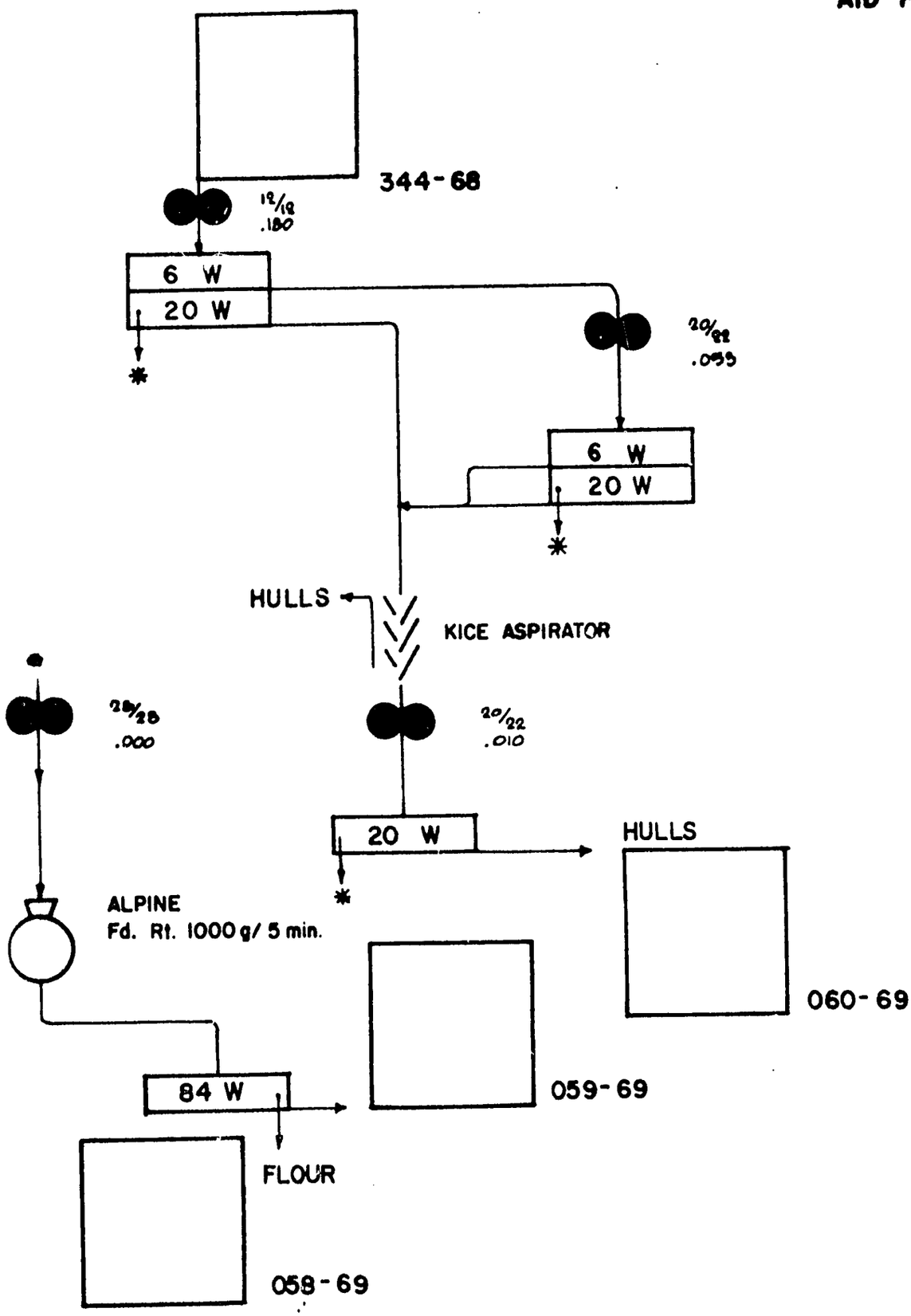

AID-F-20

KANSAS STATE UNIVERSITY Manhattan, Kansas 66502

CURRICULUMS IN
MILLING TECHNOLOGY
FEED TECHNOLOGY
BAKERY MANAGEMENT

DEPARTMENT OF GRAIN SCIENCE AND INDUSTRY
MILLING INDUSTRIES BUILDING

PIBEON PEAS FLOW

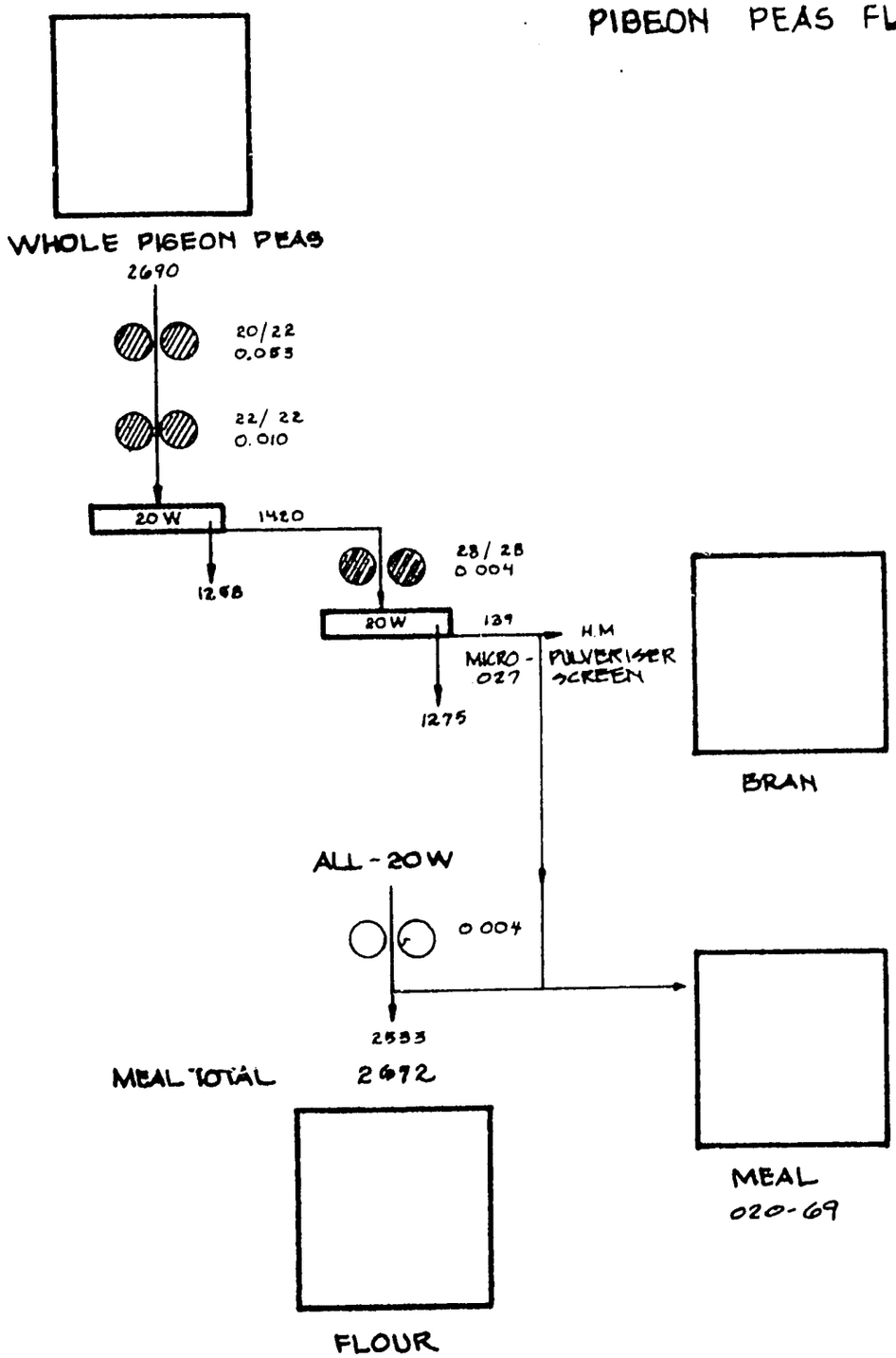

Nutritive Value of Chick Peas and Pigeon Peas

Chick peas and pigeon peas are commonly and abundantly available in developing countries, but very little information is available on protein quality, nutritive value, and their proper uses.

Nutritive value of chick peas from Morocco and Pakistan and pigeon peas from Pakistan were compared on the basis of growth of rats.

A growth study with Charles River Strain Albino rats was conducted using a completely randomized experimental design, six replications per diet. The rats were housed in individual wire cages in a control environment, laboratory, and fed ad libitum.

The only source of protein was chick peas and pigeon peas. A casein diet was used as a control. Diets were compared on an isonitrogenous basis. Crude protein and moisture of all samples was determined by AOAC methods. Amino acid content of the chick peas and pigeon peas was determined by ion exchange chromatography.

Significant differences were found among weight gains of rats at the end of the fourth week. Those fed with the chick peas from Morocco and Pakistan gained more (Table 3) than those fed the pigeon peas. Some rats fed the diet containing pigeon peas lost weight during the first and second week. The overall performance of these rats was very poor compared to those fed chick peas (Tables 3 and 4).

Significant differences were found among PER values for the different diets (Table 5). The PER values indicate those fed chick peas (from Morocco) had a higher nutritive value than those fed chick peas from Pakistan but were similar to the casein control. Performance of chick pea diets was much better than the pigeon pea diet which severely limited growth of rats.

The rats on pigeon pea diets lost weight during the first week. Another group of four rats (28 days old) were introduced at the end of the first week to a diet the same as that of Diet No. 4 except the raw pigeon peas were roasted using dry heat (110°F for 15 minutes). The weight gain and PER of this group shows marked improvement when compared to the raw pigeon pea diet.

Autopsies were performed on the rats fed Diets 1-4. Nothing abnormal was observed with rats fed Diet 1. With Diet 2 nothing abnormal was observed, except the ceca was considerably enlarged. More substaneous fat around the viscera was noticeable.

Nothing abnormal was observed with Diet 3, but the ceca in these animals was also considerably enlarged when compared to the casein diet. The ceca were also larger than those of rats on Diet 2 (chick pea, Morocco) and the color was a dark gray.

Rats on Diet 4 (pigeon peas) were dissected at the end of the fifth week. The small intestine was almost empty, but the ceca were enlarged. The ceca appeared larger than those of rats on Diet 1-3 and were grayish in color. No visible body fat.

Work In Progress

1. Protein solubility of the different peas.
2. Pepsin-pancreatin *in vitro* digestion.
3. Amino acid composition of different peas and solubility fractions.

COMPOSITION OF DIETS
% AND WEIGHT IN GRAMS (PEAS ARE ONLY SOURCE OF PROTEIN)

Diet No. 1 Control

	%	Wt.	
Casein	11.38	455.2	
Starch	80.62	3224.00	
Vitamin Premix	2.0	80.00	Protein = 10.3%
Mineral Premix	3.0	120.00	Moisture = 10.8%
Fat	3.0	120.0	

Diet No. 2 (Chick Peas From Morocco)

	%	Wt	
Chick Pea	51.5	2062.4	
Starch	40.5	1620.0	Protein = 10.5%
Vitamin Premix	2.0	80.0	Moisture = 10.0%
Mineral Premix	3.0	120.0	Vitamins & Minerals = 100% supply
Fat	3.0	120.0	according to NRC requirements.

Diet No. 3 (Chick Peas From Pakistan)

	%	Wt	
Chick Pea	54.9	2172.0	
Starch	37.1	1508.0	Protein = 10.9%
Vitamin Premix	2.0	80.0	Moisture = 9.9%
Mineral Premix	3.0	120.0	Vitamins & Minerals = 100% supply
Fat	3.0	120.0	according to NRC requirements.

Diet No. 4 (Pigeon Peas From Pakistan)

	%	Wt	
Pigeon Pea	50.7	2028.0	
Starch	41.0	1584.0	Protein = 10.4%
Vitamin Premix	2.0	80.0	Moisture = 10.3%
Mineral Premix	3.0	120.0	Vitamins & Minerals = 100% supply
Fat	3.0	120.0	according to NRC requirements.

Table 3. Weight gain (in grams) of rat (0-4 weeks)

Diet	Casein Control	Chick Peas (Morocco)	Chick Peas (Pakistan)	Pigeon Peas (Pakistan)
Rat				
1	114	152	146	21
2	103	109	142	10
3	88	123	122	16
4	101	156	116	24
5	88	141	172	13
6	85	149	138	4
Total	579	830	836	88
Average	96.5	138.3	139.3	14.1

Table 4. Feed consumption in grams (0-4 weeks)

Diet	Casein Control	Chick Peas (Morocco)	Chick Peas (Pakistan)	Pigeon Peas (Pakistan)
Rat				
1	405	488	474	224
2	356	373	474	188
3	322	424	394	183
4	323	403	475	231
5	365	441	581	236
6	322	485	458	181
Total	2,093	2,614	2,856	1,243
Average	348.8	435.6	476.0	207.1

Table 5. Protein efficiency ratio.

Diet	Casein Control	Chick Peas (Morocco)	Chick Peas (Pakistan)	Pigeon Peas (Pakistan)
Rat				
1	2.73	2.96	2.82	0.91
2	2.81	2.78	2.75	0.52
3	2.66	2.76	2.84	0.84
4	3.04	3.22	2.24	1.00
5	2.34	3.04	2.71	0.22
6	2.52	2.90	2.72	0.22
Total	16.10	17.67	16.10	4.06
Average	2.68	2.96	2.63	0.67

Effect of Heat Processing on the Nutritive Value of Chick Peas

Experiment I

INTRODUCTION

Protein malnutrition does not occur in countries where there are abundant supplies of milk and other foods of animal origin, but little animal milk is produced in most of the countries where the problem exists, and hence attention has been focused on foods of vegetable origin, legumes which are rich in protein and can help to fulfill protein requirements.

Much research has been done during recent years on the value of plant proteins in meeting the needs, preventing and curing protein malnutrition.

Legumes are cultivated throughout the world in both the tropics and the temperate zones, they have a high protein content ranging from 17 to 25 per cent in the dry grains, while the range in cereals is from 6 to 14 percent. Though grown in smaller quantities, their contribution to world supplies of protein is considerable. They are thus an important human food and one of rather special interest from the standpoint of nutrition.

The position of legumes in agriculture and nutrition has not received the same attention as cereals and less systematically studied work is available.

Several investigators have worked on biological evaluation of legume proteins, (Niyogi, Narayama and Desar, (16), (17), Basu, Nath, and Ghami, (18), (19), (20), (21), and (22); Acharya, Niyogi, and Patwardheu, (8), Mitra and Vernia, (23), Chattopadhyay and Banerjee (24) and Harwe and Magar (25), Tandon et al., (26), Lautz et al., (27), and Altshul (14) and several others) using growth methods with albino rats, fractionation of proteins by solubility methods and its amino acid composition.

According to FAO Report No. 19, (28) the trials made in India on feeding children with legume preparations and skim milk, indicated that the legumes were as effective in supporting growth as skim milk.

The present studies are focused mainly on use of chick peas as a source of protein.

India and Pakistan produce and consume around 90% of the world production of chick peas. In these countries large sections of the population depend on a basic diet which is low in animal protein. The basic diet is mainly composed of cereals which are low in some of the essential amino acids. For example, lysine and tryptophan are amino acids which are lacking in their daily diets. The major problem in protein malnutrition is to increase the quantity of protein eaten; but the supplementation of chick peas to the basal diet also improves the quality of protein. The supplemented flours come nearer to satisfying the amino acid requirements of adult humans, (Altschul, (14)). There is a question of availability of the amino acids in these flours, which could influence the nutritive value of mixtures.

The use of chick pea flour as an additive for enrichment of foodstuffs can be well accepted, as it is considered the cheapest of the products derived from the seed and may be used advantageously in a wide group of food products.

The purpose of this study is to explore the possibilities of improving the nutritive value of chick peas by heat processing. Whether this can provide a sound and economic solution to problem of improving the protein nutrition in underdeveloped countries needs further extensive work.

Some workers have already revealed that legumes without suitable processing are imperfectly assimilated.

The calorie yield of any food and the value of the proteins and other nutrients it contains are obviously influenced by its digestibility. Much attention has been given to the digestibility of the legumes. Digestibility is affected by methods of processing and cooking. It appears that in the raw state many legumes contain substances which are indigestible or antagonistic to digestion such as saponins, glycosides, alkaloids, conjuates of protein with phytin, hemagglutinin and substances which inhibit the action of the digestive enzyme trypsin.

Experiments indicate that greater degrees of heat than those used in cooking, i.e., autoclaving under pressure may be needed to destroy the so-called trypsin inhibitor. On the other hand extreme heat treatment for a longer period may destroy some essential amino acids, lysine and cystine.

Soaking in water is the first step in most methods of preparing legumes for consumption. No loss of nutrients occurs when the grains are soaked in their skin. By soaking, the constituents of the seed stored in an almost inert form begin to be organized for supply to the seed embryo and they may become more available when eaten as human food.

Boiling as ordinarily practiced may lead to the losses of water soluble nutrients of the order of 25 percent, so steaming could be a better treatment.

According to Altschul (14), roasting largely destroys thiamine and pantothenic acid present in raw groundnuts and leads to a considerable loss of riboflavin. Niacin was little affected.

The heating of grain also improves the keeping qualities (28).

It is obvious from previous literature that cooking, autoclaving and roasting have been used as different methods of processing in order to improve the nutritive value of some legumes. Subsequent work has been

conducted to cast more light on the nature of the effect of heat treatment on the nutritive value of chick peas.

Of interest to the present communication are the observations on the influence of heat processing on the nutritive value of chick peas as determined by rat growth and solubility fractionation of the protein.

EXPERIMENTAL

Feeding Tests

Animals: 21 day old male weanling albino rats of Charles River Strain weighing 45 to 48 g. were used. The animals were housed in individual cages. Each diet was fed to a group of six rats. The rats were fed ad libitum and unconsumed feed was collected and weighed. The rats were weighed once a week during the five week experimental period.

The average increase in weight per g. of protein consumed (PER) was taken as the measure of the biological value of the protein for supporting growth.

METHODS OF HEAT PROCESSING

Popping

Chick peas were soaked in cold water overnight, allowed to dry at room temperature to remove surface moisture, and dry heated in a stainless steel pan for about 15-20 minutes at 150°C. Dehulling and popping occurred during heating.

Roasting

In one batch, raw chick peas were heated in a stainless steel pan for 15 minutes at 150°C, and in another batch the heating was continued up to 30 minutes at the same temperature.

Steaming

In one batch, the chick peas were steamed for 15 minutes in an autoclave; care was taken not to close the lid tightly to allow release of steam, in another batch steaming was continued to 30 minutes, using the same procedure.

The drain water in the autoclave, after steaming, was collected to analyze for loss of protein.

After processing, all samples were dried in a hot air drier regulated at 45° to 50° to equilibrate their moisture contents (12-13%). The dried chick peas were milled to 20 mesh particle size, and stored at -20°F to avoid rancidity and other deteriorative changes prior to use.

Total protein, moisture, fat, fiber, calcium, and phosphorus were estimated in chick peas by AOAC methods and by (Horwitz, (29)). (Table 6).

Preparation of Diets

The total protein content in all diets was 10%. Diets were prepared so that each diet contained 10% chick pea protein, 5% fat, 2% vitamin premix, and 3% mineral premix.

To each 100 g. of diet the following was added; Vitamin A, 0.8 mg; Vitamin D, 0.05 mg.; Vitamin E, 24.0 mg.; Vitamin K, 0.01 mg; thiamine hydrochloride, 0.125 mg.; riboflavin 0.25 mg.; pyridoxine, 0.12 mg.; niacin, 0.15 mg.; calcium pantothenate, .80 mg.; choline HCl, 75.0 mg.; Vitamin B_{12}, 0.5 mg.; diacalcium phosphate, 3000 mg.; sodium chloride, 300 mg.; Trace minerals (iron, copper, cobalt, iodine, zinc, calcium, and manganese) 50 mg.; potassium chloride, 305 mg.; magnesium sulfate, 177 mg.

Corn starch (food grade) was added to make the diet to 100%.

The control diet contained 11.5% casein, the other constituents of the diet were the same as the experimental diets.

Solubility Fractionation of Proteins

To obtain different fractions of soluble proteins a modified Osborne-Mendel method as employed by Jimenez (34) was used with minor modifications.

Two grams of chick pea flour (100 mesh) was defatted and subjected to four consecutive extractions using 150 ml. of the following solvents: distilled water, 5%, NaCl, 80% ethanol + 0.2% sodium acetate, and 0.2% sodium hydroxide solution. After shaking in a mechanical shaker for 12 hrs. and centrifuging for 1 hr., 2 ml. of aliquot was taken and analyzed for protein nitrogen by the micro-Kjeldahl method.

RESULTS AND DISCUSSION

Table 7 shows the results of the growth of young rats fed chick peas either raw, popped, roasted 15 or 30 minutes, steamed for 15 or 30 minutes, and the casein control diet.

The growth of rats fed processed chick peas (popped, roasted 15 minutes and steamed 15 minutes) was better than those fed raw chick peas or the casein diet. Performance of diets with chick peas roasted 30 minutes and steamed 30 minutes was poor. Rats on the latter two diets gained only 76 and 108 gm. respectively in contrast to 132, 140, 142 and 165 g. weight gain on raw, roasted 15 minutes, steamed 15 minutes and popped chick pea diets during the four week experimental period (Figure 7).

When 0.2 percent lysine was supplemented to these diets (30 minutes roasted and steamed diets) the rats regained weight very rapidly. During two weeks of lysine supplementation, the average weight gain on steamed chick peas (30 minutes) was 67 g. as compared to 13 g. on the same diet without lysine. Similarly the average weight gain of rats fed with roasted chick peas (30 minutes) with lysine was 66 g. as compared to 14 g. without supplementation of lysine (Table 8).

The food intake was affected. It is indicated in Table 7 that protein efficiency ratios (PER) of popped, 15 minutes roasted and 15 minutes steamed chick peas were 2.7, 2.3 and 2.4 respectively as compared to 2.1 for raw chick peas. Similarly on 0.2% lysine supplementation, the PER values of 30 minutes roasted and 30 minutes steamed chick peas was 2.5 and 2.1, whereas without lysine the PER values were 0.8 and 0.76 respectively (Table 8).

It is obvious from results presented in Table 7, and Figure 7, that there was a noticeable increase in weight gain and PER values from 0-4 weeks in the case of popped and 15 minutes roasted and 15 minutes steamed chick peas as compared to raw chick pea diets. The differences in weight gain and PER values due to heat processing were found to be significant when the results were treated statistically (Tables 11 and 12).

Improvement of the nutritive value of popped chick peas may be due to the removal of husk, during popping, which enhances the digestibility of protein. Husked and split legumes are reported as good sources of thiamine (28). Short-time steaming and roasting might have liberated some of the essential amino acids, which became readily available for utilization with a resultant improvement in their nutritive value; whereas nutrients are tied up in long duration steaming and roasting or there is a destruction of amino acids.

Due to the work cited elsewhere, it is generally accepted that the decrease in nutritive value observed in heat damaged proteins is due primarily to increased enzyme resistance, and that the destruction of lysine may be regarded as significant.

Evans and Butts (30) found that heat processing causes two types of inactivation of lysine, one a reaction of the lysine with sucrose to destroy it and the other a reaction with protein to render it unavailable to enzymatic digestion *in vitro*.

In our studies, the nutritive value of chick peas steamed and roasted chick peas for longer periods (30 minutes) was restored by supplementation with lysine, showing that the deterioration was due to amino acid destruction or unavailability and not due to formation of toxic products.

Table 6. Proximate analysis of chick peas.

Moisture content	10.0%
Protein	18.0%
Ash	2.6%
Crude fat	5.1%
Crude fiber	3.0%
Calcium	160 mg./100g.
Phosphorus	300 mg./100g.

Table 7. Effect of heat processing on nutritive value of chick peas.

Protein Source	Average Weight Gain (0-4 wks) gms	Average Feed Consumption (0-4 wks) gms	Protein Efficiency Ratio (average)
Casein	87.5	357.8	2.4
Raw chick peas	132.6	555.3	2.1
Popped chick peas	165.6	523.0	2.7
Roasted chick peas 15 minutes	140.0	531.6	2.3
Roasted chick peas 30 minutes	75.0	432.8	1.6
Steamed chick peas 15 minutes	142.8	554.0	2.4
Steamed chick peas 30 minutes	110.0	431.6	1.9

EFFECT OF HEAT PROCESSING ON NUTRITIVE VALUE OF CHICK PEAS

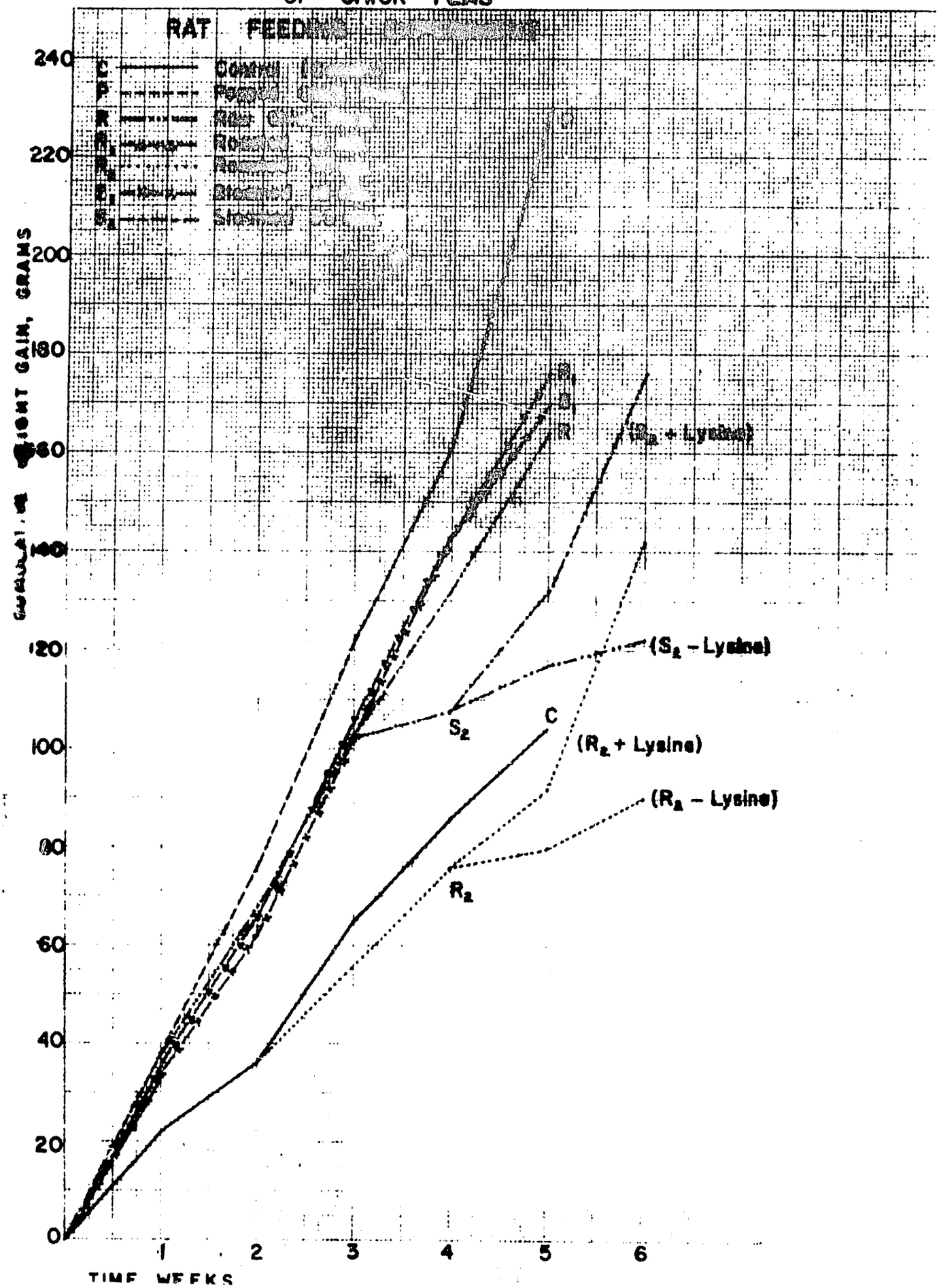

Table 8. Effect of lysine supplementation of heat processed chick peas on growth of rats. (4-6 wks)

Diets	Feed Consumption g.	Weight Gain g.	PER
1. 30-min. steamed chick peas + 0.2% lysine.	150	67	2.1
2. Above diet without 0.2% lysine.	95	13	0.76
3. 30-min. roasted chick peas + 0.2% lysine.	132	66	2.5
4. Above diet without 0.2% lysine.	88	14	0.8

Table 9. Analysis of variance. (Weight gain of rats)

S.V.	DF	SS	MSS	F. Value
Diets	6	35478.28	5913.46	F (6, 35)=
Error	35	19205.34	548.72	$\frac{5913.46}{548.72}$
Total	41	54683.62		

F = 10.895
L.S.D. at 0.05 = 33.07

Ordered array of diet treatment means from largest to smallest.

No. 2 (popped) = 165.6
No. 6 (steamed 15 mins.) = 142.8
No. 4 (roasted 15 mins.) = 140.0
No. 3 (raw chick peas) = 132.6
No. 7 (steamed 30 mins.) = 110.0
No. 1 (casein) = 87.5
No. 5 (roasted 30 mins.) = 75.0

Table 10. Analysis of variance PER (0-4 weeks).

S.V.	DF	SS	MSS	F. Value
Diets	6	4.9	0.8	F(6, 35)
Error	35	3.8	0.11	$\frac{0.8}{0.11}$ =
Total	41	8.7		7.27

F = 7.27
L.S.D. at 0.05 = 1.44

Ordered array of diet treatment means from largest to smallest.

No. 2 (popped) = 2.7
No. 1 and 6 (casein and steamed 15 mins.) = 2.5
No. 4 (roasted 15 mins.) = 2.3
No. 3 (raw chick peas) = 2.1
No. 7 (steamed 30 mins.) = 1.9
No. 5 (roasted 30 mins.) = 1.6

Table 11. Effect of heat processing on solubility of protein fractions in chick peas. (Distribution of N among fractions)

Sample No	Samples	Total % protein Kjeldahl	Water Sol. %	NaCl Sol. %	Alcohol Sol. %	Alkali Sol. %	Total Sol. %	Insoluble N%
1	Raw chick peas	18.4	36.8	13.0	4.8	30	83.8	16.2
2	Popped chick peas	21.0	15.0	20.0	6.7	50	91.7	8.3
3	Roasted 15 min.	20.0	13.0	20.2	6.5	35	74.7	25.3
4	Roasted 30 min.	20.0	10.5	6.0	4.8	15	36.0	64.0
5	Steamed 15 min.	20.0	27.0	20.0	3.6	25	75.6	24.4
6	Steamed 30 min.	18.4	27.5	20.0	3.5	13.0	64.0	36.0

Formula applied for calculation - $\frac{N \times 75 \times 6.25}{2 \times 18.4}$

N = nitrogen.
75 = amount of solvent used.
18.4 = percent of protein in the sample.
6.25 = common factor for conversion of nitrogen to calculate protein.

PROTEIN SOLUBILITY IN VARIOUS REAGENTS

A very pronounced change in the solubility of the proteins in raw chick peas resulted from heat processing. The results are presented in Table 11.

Popping.

There was a decrease in nitrogen soluble in water and saline solution and an increase in alkali and alcohol soluble nitrogen.

15 Minute Roasting.

There was an increase in water soluble and alcohol soluble nitrogen, but a decrease in saline and alkali soluble nitrogen.

30 Minute Roasting.

It caused a decrease in nitrogen soluble in all solutions and an increase in residual nitrogen fractions.

15 Minutes Steaming.

This treatment increased the nitrogen soluble in water and saline solutions and decreased the nitrogen soluble in alkali and alcohol solutions.

30 Minute Steaming.

It resulted in low water, alcohol, and alkali soluble nitrogen causing an increase in saline soluble nitrogen.

It is denoted from the Table 11 that among all the treatments, popping produced the maximum amount of nitrogen in alkali soluble fraction.

CONCLUSION

There is no doubt that the effect of heat processing on the nutritive value of proteins in foods is a matter of importance.

The high protein content of chick peas itself is a fact of great significance but the contribution which any protein makes to the fulfillment

of requirements depends not only on the quantity in which it is present in the diet, but also on its quality which in turn depends on amino acid composition. Further work in this line is in progress.

However the results obtained should be considered as an indication of modifications which can be accomplished by heat processing with ultimate improvement of the nutritive value of chick pea protein.

AMINO ACID STUDIES

The amino acids in six differently treated samples of chick peas were analyzed utilizing an enzymatic hydrolysis method.

Enzymatic hydrolysis: Protein digests were prepared by incubating 100 mg. of test protein (chick pea flour) with 1.5 mg. of pepsin and 15 ml. 0.1 N HCl at 37°C for 3 hrs. After 3 hrs. the digestion mixtures were neutralized with 7.5 ml. of 0.2 N NaOH and incubated for an additional 24 hrs. at 37°C using 4 mg. of pancreatin in 7.5 ml. of pH 8.0 phosphate buffer which contained 50 PPM merthiolate (to prevent growth of micro-organisms in the digestion mixture). Ten ml. of digestion mixture were added to 50 ml. of 1 percent picric acid solution to precipitate the undigested proteins and peptides. This mixture was frozen and stored for 24 hrs. and then filtered through a Whatman No. 4 filter.

Fifty ml. of the filtrate was passed through a 12 x 50 mm column of Dowex (2 x 8) anion exchange resin in the chloride form to remove the picric acid. The column was rinsed 3 times with 5 ml. portions of 0.02 N HCl. The amino acid digest mixture was then evaporated to dryness using vacuum distillation equipment. The dried samples were dissolved and diluted to 10 ml. with pH 2.2 citrate buffer.

Amino acid analysis of the sample was conducted using ion-exchange chromatography as described by Speckman et al., (31), with a Beckman Model 120 B amino acid autoanalyzer. Basic amino acids were separated on a 159 cm. column using pH 3.25 buffer followed by pH 4.25 buffer after 1 hr. 40 mts. from zero time.

Results

Table 12 lists the amount of free amino acids in the raw and processed chick pea samples after deproteination with picric acid. It is indicated from the results, that amount of lysine in popped chick peas was higher than

in other processed and raw chick peas. The amount of arginine in popped chick peas was higher than in other processed and raw samples. In general it was observed that in comparison to raw and other processed chick peas the amounts of lysine, arginine, aspartic acid, serine, glutamic acid, alanine, methionine, isoleucine, leucine, tyrosine and phenylalanine appeared larger in popped chick peas.

Comparing the two different roasting treatments, the amounts of amino acids in the samples roasted for 15 minutes, were more than in those roasted for 30 minutes.

In the case of the two steaming treatments, the amounts of amino acids in the sample steamed for 15 minutes were more than in the samples steamed for 30 minutes except arginine.

It was noted among the processing treatments that popping improved the nutritive value of raw chick peas. Roasting 15 minutes and steaming 15 minutes were comparatively better than roasting and steaming for 30 minutes.

Rat growth studies, the solubility of protein fractions and amino acid analysis, indicate that the popping treatment enhanced or improved the quality of the chick pea protein. Data obtained during our studies indicated that it might be due to the availability of lysine by the popping treatment.

Table 12. Amino acid analysis.

Amino Acids/ Treatments G. AA/100g Kjed. Protein	Raw Chick Peas	Popped Chick Peas	Roasted 15 min.	Roasted 30 min.	Steamed 15 min.	Steamed 30 min.
Lysine	1.082	2.667	0.165	0.140	1.389	0.072
Histidine	0.173	0.825	0.062	0.039	0.265	0.248
Ammonia	0.221	1.421	0.264	0.194	0.000	0.000
Arginine	0.870	7.236	0.842	0.547	0.086	1.239
Aspartic acid	0.000	1.689	0.209	0.138	0.600	0.315
Threonine	0.000	0.674	0.101	0.089	0.865	0.657
Serine	0.000	1.394	0.194	0.190	0.860	0.847
Glutamic acid	0.164	2.601	0.310	0.286	0.912	0.431
Proline	0.000	0.000	0.047	0.032	0.442	0.363
Glycine	0.357	0.310	0.059	0.056	0.393	0.384
Alanine	0.653	1.059	0.153	0.127	0.547	0.502
Half cystine	0.000	0.000	0.000	0.000	0.000	0.055
Valine	0.426	4.910	0.681	0.411	1.123	0.913
Methionine	0.151	1.566	0.178	0.126	0.073	0.247
Isoleucine	0.342	1.568	0.197	0.124	1.007	0.829
Leucine	0.824	3.032	0.494	0.351	1.531	1.262
Tyrosine	0.8555	1.801	0.316	0.245	1.102	0.832
Phenylalanine	1.185	2.250	0.404	0.231	1.298	1.012

MICROSCOPIC STUDIES ON RAW AND PROCESSED CHICK PEAS

Samples of raw grains as well as processed materials were prepared for histological study. A modification of the method of Larkin *et al.*, (32) was used for raw grains employing xylene as the paraffin solvent. The grains were killed and fixed in CRAF solution for 24 hrs., then soaked overnight in water. All samples were prestained as an aid to orientation when embedded. The blocks of embedded material were submerged in water for 24 hrs, then kept in a refrigerator for 20 minutes. This was done to soften the embedded seed tissues.

The processed samples were partially vacuum infiltrated with 60% ethyl alcohol containing about 5% commercial formalin.

Sections uniformly 15μ thick were obtained with a sliding microtome.

Sections of paraffin embedded samples were floated onto microslides precoated with a thin film of Haupt's gelatin adhesive, over which several drops of 3% commercial formaldehyde solution was spread. The sections were then expanded and dried on a warming plate at 40°C. Staining of raw and processed grains was done with saframin (generally used by various workers for staining protein). According to Reeve, et al. (33), delafields hematoxylin, saframin and fast green could be used.

Microscopic examination indicated that saframin stained almost all tissues in the seeds. There was no distinction among treatments. All looked alike. Thus, not much could be concluded from the present histological studies. The value of further histological work is under consideration.

Effect of Heat Processing On Nutritive Value of Chick Peas

Experiment II

In Chick Pea Experiment II, studies were undertaken on the biological value of chick peas (cicer arietinum) both raw and processed. The biological value was determined by rat growth. The average increase in weight was taken to be the measure of the biological value of chick peas for supporting growth.

Experimental; Materials & Methods: Seven diets were used in this experiment. The composition is described in Table 13. The experimental diet contained 20% of chick peas, 72% of 97% extraction wheat flour, 2% vitamin premix, 3% mineral premix and 3% of fat. Corn starch (food grade) was added to make the diet to 100%.

The chick peas incorporated in the diet were processed as follows:

(1) Raw chick peas, used in Diet 2 and Diet 7. These were incorporated at 20 and 46% respectively.

(2) Dry heat treatment: dried in oven at 100°C for 1 hour.

(3) Soaked overnight, water drained out next morning and dried.

(4) Soaked, dried and dehulled.

(5) Steamed on a steam liner for about 10 minutes.

(6) The control diet was composed of 4.86% of casein in 72% of wheat flour including other ingredients except chick peas.

Before milling, as described in flow sheet AID-F-11, the raw and processed chick peas were dried at 50°C in an air drier for 1 hr. The samples were analyzed for moisture and protein content. The moisture contents of raw and processed samples were in range of 13.3 to 13.7. The percent protein of dry heated and dehulled chick peas was higher (19.0%) than raw chick peas and chick peas processed by the other treatments (18.0%).

All the diets were analyzed for protein and moisture before feeding to rats. The percent of protein in the diets 1 to 6 was 11.6 except the diet 7 (15.0% protein) which was composed of 50 percent of chick peas.

Young weanling male albino rats (Charles River strain) weighing 46-50 g. were used. Each diet was fed to a group of 6 rats. The rats were housed individually in wire floor cages in an air conditioned room at 74-75° temperature and 65% relative humidity. Food and water were offered ad libitum. The rats were randomly distributed into the different groups.

The weights of rats and their feed consumption were recorded once a week.

Table 13. Composition of diets.

S.N.	Ingredients	Diet 1	Diet 2 to 6	Diet 7
		%	%	%
1	Wheat	72	72	46
2	Casein	4.86	--	--
3	Chick peas	--	20	46
4	Starch	15.14	15.14	15.14
5	Vitamin premix	2.0	2.0	2.0
6	Mineral premix	3.0	3.0	3.0
7	Fat	3.0	3.0	3.0

S.N.	Diets	Protein	Lysine	Arginine	Threonine	Isoleucine	Methionine	Histidine	Leucine
		%	%	%	%	%	%	%	%
	1	11.43	0.558	0.539	0.378	0.536	0.279	0.301	0.928
1	NRC Req.	20.0	0.9	0.2	0.5	0.50	0.32	0.30	0.80
	% of NRC Req.	72.15	62.0	269.0	75.6	108	86.0	100	101.5
	2 to 6	11.16	0.492	0.711	0.371	0.435	0.144	0.280	0.8
2	NRC Req.	20.0	0.9	0.2	0.5	0.5	0.32	0.3	0.8
	% of NRC Req.	50.6	54.7	355.0	74,0	87.0	40.5	93.0	101.2
	7	15.09	0.74	1.253	0.49	1.93	0.118	0.345	0.938
3	NRC Req.	20.0	0.9	0.2	0.5	0.5	0.32	0.3	0.8
	% of NRC Req.	70.5	80.0	626.6	98.0	38.6	30.6	115.0	117.0

Diet No. 1 Control Wheat + Casein
Diet No. 2 Raw chick peas + wheat flour
Diet No. 3 Dry heat treated chick peas + wheat flour (100°C (1 hr.)
Diet No. 4 Soaked over night, dried chick peas + wheat flour
Diet No. 5 Soaked over night, dried, dehulled chick peas + wheat flour
Diet No. 6 Steamed (for 10 mins) dried chick peas + wheat flour
Diet No. 7 Raw chick peas + wheat flour (50:50)

AID-F-11

KSU KANSAS STATE UNIVERSITY *Manhattan, Kansas 66502*

CURRICULUMS IN
MILLING TECHNOLOGY
FEED TECHNOLOGY
BAKERY MANAGEMENT

DEPARTMENT OF GRAIN SCIENCE AND INDUSTRY
MILLING INDUSTRIES BUILDING

23-06-69

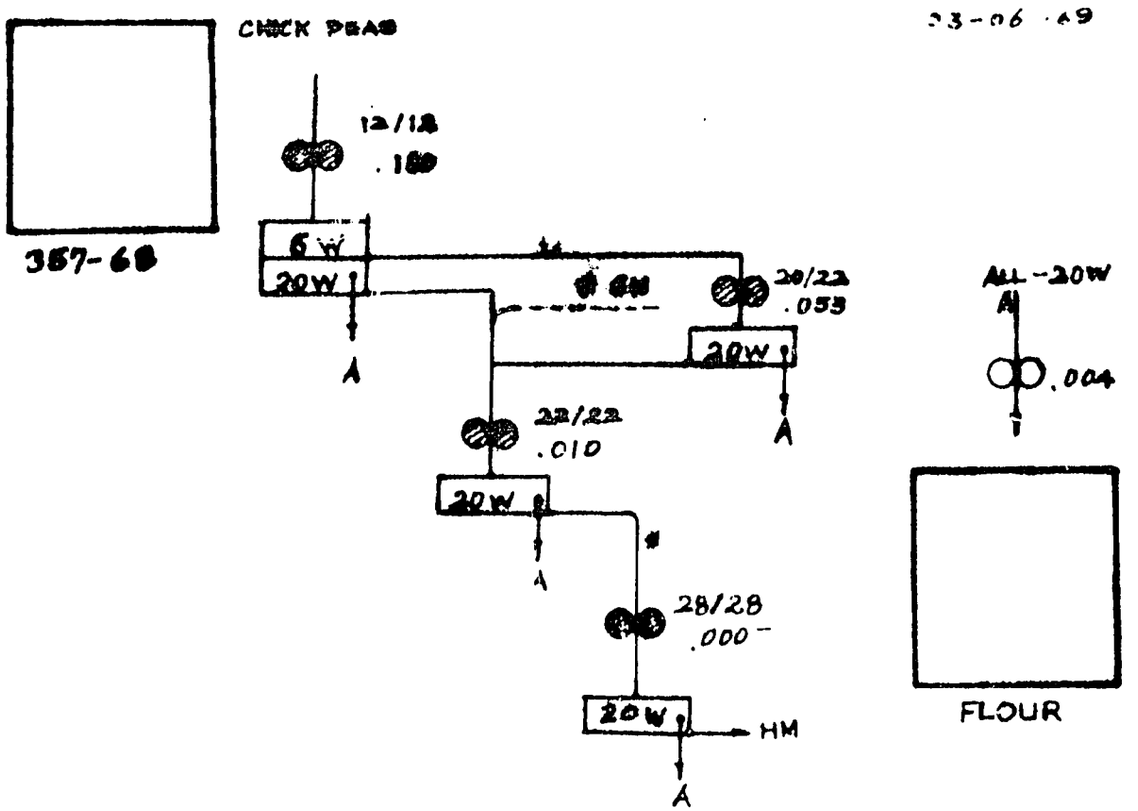

FLOUR NO	405-68	406-68	407-68	410-68	409-68
	AC-101	102	108	105	*104
+6W	1454	1472	1697	1973	1491
+20W	1323	1414	1482	1893	15 +6W
+20W	100	245	1217	1153	419
+20W	25	44	83	94	4

* Asp. — HULL REMOVED FROM SYSTEM

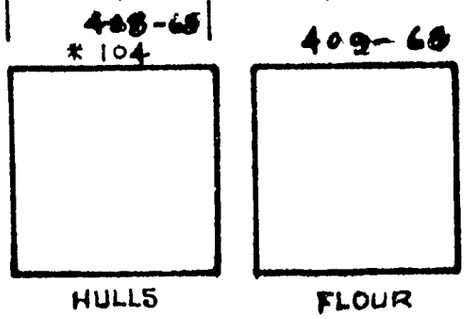

Results:

Table 14 indicates the results on the growth of young rats fed with seven different diets.

The growth of rats on 50% chick pea diets and soaked, dried, dehulled peas was better than other treatments. The 50% chick pea diet resulted in better growth than casein but supplied more protein.

The average weight gain of rats on 50% chick pea diet was 167 g. in four weeks as compared to 158 g. in casein diet.

Rats in soaked, dried, dehulled, steamed and dry heat treated diets weighed 24, 15 and 12 grams more than those in raw chick pea diets.

Feed consumption (Table 14) was also affected. Consumption was higher in steamed diets than other diets.

PER values in Table 14 indicate that dry heat treatment and soaked, dried and dehulled peas showed values similar to the casein diet.

Improvement of the nutritive value by dry heat treatment, steaming, soaking, drying and dehulling indicates that it might be due to the inhibition or removal of toxic factors by heating, soaking, dehulling and steaming.

SUMMARY

Using rat growth as the criterion, the nutritive value of raw and processed chick pea diets were studied at a 11.0% protein level. It was found after fourteen days that chick peas had improved nutritive value after steaming, soaking and dehulling.

These different methods of processing may be used in the future to produce presoftened peas and beans, which may be cooked in a shorter period of time, may result in the enhancement in digestibility of protein, thus increasing the biological value.

Table 14. Weight gain, feed consumption and PER'S of rats fed diets containing processed chick peas

Treatment	Average Weight Gain (0-4 wks) gms	Average Feed Consumption (0-4 wks) gms	Protein Efficiency Ratios (0-4 wks)
Control (Casein + wheat flour)	158.5	359.0	3.53
Raw chick peas	120.8	351.0	3.10
Dry heated chick peas	132.3	372.6	3.50
Soaked, dried chick peas	126.2	358.0	2.80
Soaked, dried dehulled chick peas	144.5	365.0	3.40
Steamed (10 minutes)	135.0	440.0	2.52
50% chick peas	167.3	366.5	2.92

Effect of Various Types of Processing On Nutritive Value of Chick Peas

Experiment III

An experiment is now in progress (started 12/17/69) to study the effect of different ways of processing chick peas on the growth of rats. The chick peas were given the following treatments before grinding into flour:

1) No treatment.
2) Popped, hulls removed.
3) Popped, hulls not removed.
4) Soaked overnight, dried without hulls.
5) Soaked overnight, dried with hulls.
6) Soaked overnight, drained, dried with hulls.
7) Soaked overnight, drained, dried without hulls.

Diets (10% protein level) were prepared from the chick pea flour by adding vitamins and minerals to meet NRC requirements, oil, starch, glucose, and cellulose. These diets and a casein control diet are being fed to groups of eight male weanling albino rats for four weeks.

Broad (Horse) Bean Processing

Procedures for the manufacture of flour from broad beans (horse beans) have been developed and are depicted in flow sheets AID-F-5, AID-F-10, AID-F-17, and AID-F-24.

The resultant flours have been used for the nutritional studies on broad beans and the nutritional and organoleptic studies on supplemented chapatis, cous cous and Moroccan bread.

Horse Bean Flow

10-11-68

AID-F-5

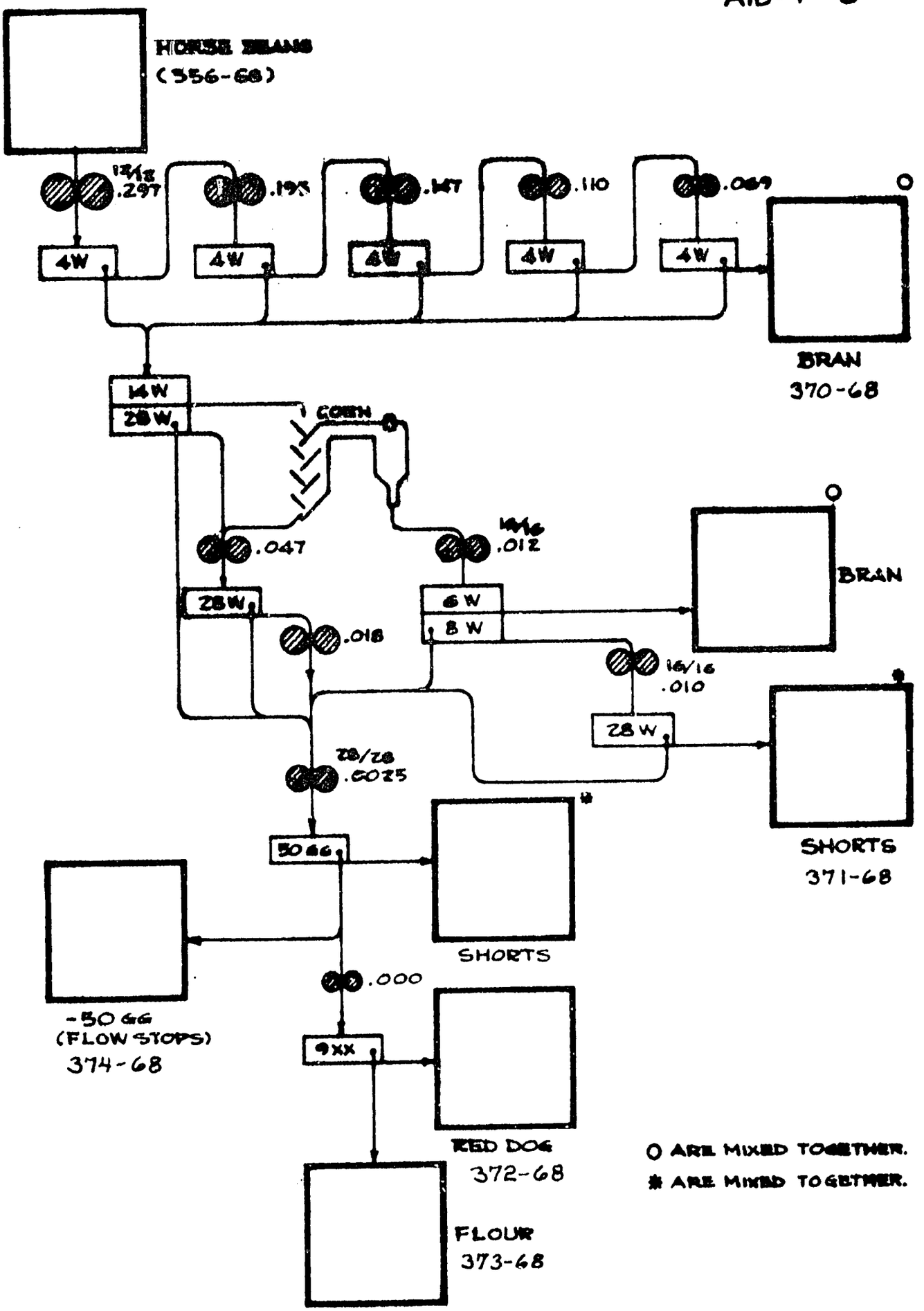

AID-F-10

KSU KANSAS STATE UNIVERSITY *Manhattan, Kansas 66502*

CURRICULUMS IN
MILLING TECHNOLOGY
FEED TECHNOLOGY
BAKERY MANAGEMENT

DEPARTMENT OF GRAIN SCIENCE AND INDUSTRY
MILLING INDUSTRIES BUILDING

03-[illegible]-68

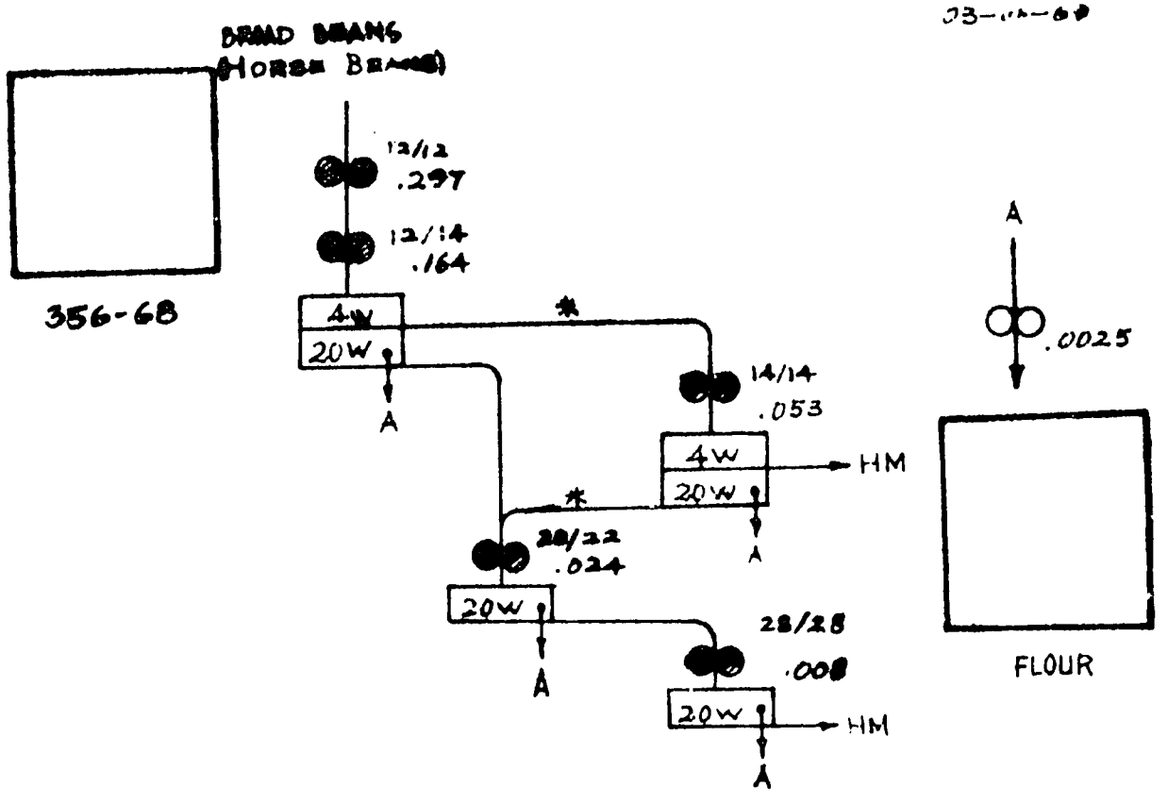

FLOUR NO	411-68	412-68	413-68	414-68	415-68
	101	102	103	105	*104
+ 4W	843	921	977	1030	1000
+ 4W	15	79	130	133	—
+20W	933	--	1238	1303	1247
+20W	245	--	113	—	—
BRAN	237	233	247	254	—

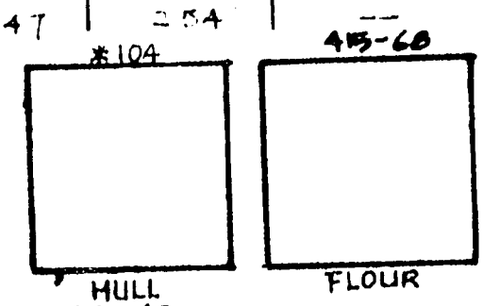

* Asp.— HULL REMOVED FROM SYSTEM

AID-F-17

KANSAS STATE UNIVERSITY *Manhattan, Kansas 66502*

CURRICULUMS IN
MILLING TECHNOLOGY
FEED TECHNOLOGY
BAKERY MANAGEMENT

DEPARTMENT OF GRAIN SCIENCE AND INDUSTRY
MILLING INDUSTRIES BUILDING

HORSE BEAN FLOW

356-68

06-06-69

		GRAMS	%
006-69 (010)	FLOUR	4758	81.8
007-69 (011)	LARGE HULLS	649	11.1
008-69 (012)	SMALL HULLS	308	5.2
009-69 (013)	RED DOG	101	1.7
TOTAL PROD.		5816	

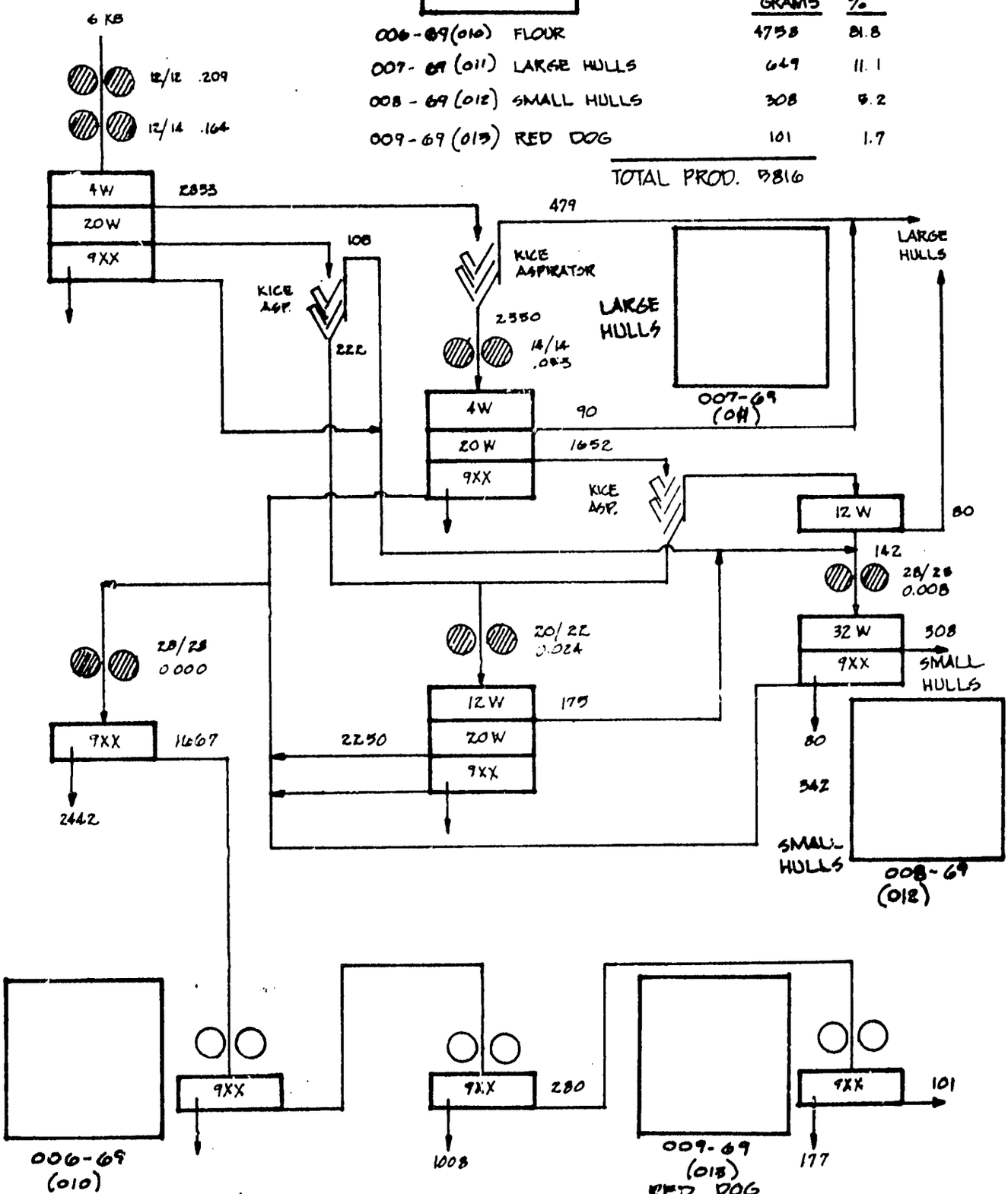

NOTE: THIS SAME FLOW WAS USED TO MAKE A SECOND MILLING ( ).

AID-F-24

KANSAS STATE UNIVERSITY Manhattan, Kansas 66502

CURRICULUMS IN
MILLING TECHNOLOGY
FEED TECHNOLOGY
BAKERY MANAGEMENT

DEPARTMENT OF GRAIN SCIENCE AND INDUSTRY
MILLING INDUSTRIES BUILDING

HORSE BEAN FLOW

07-29-69

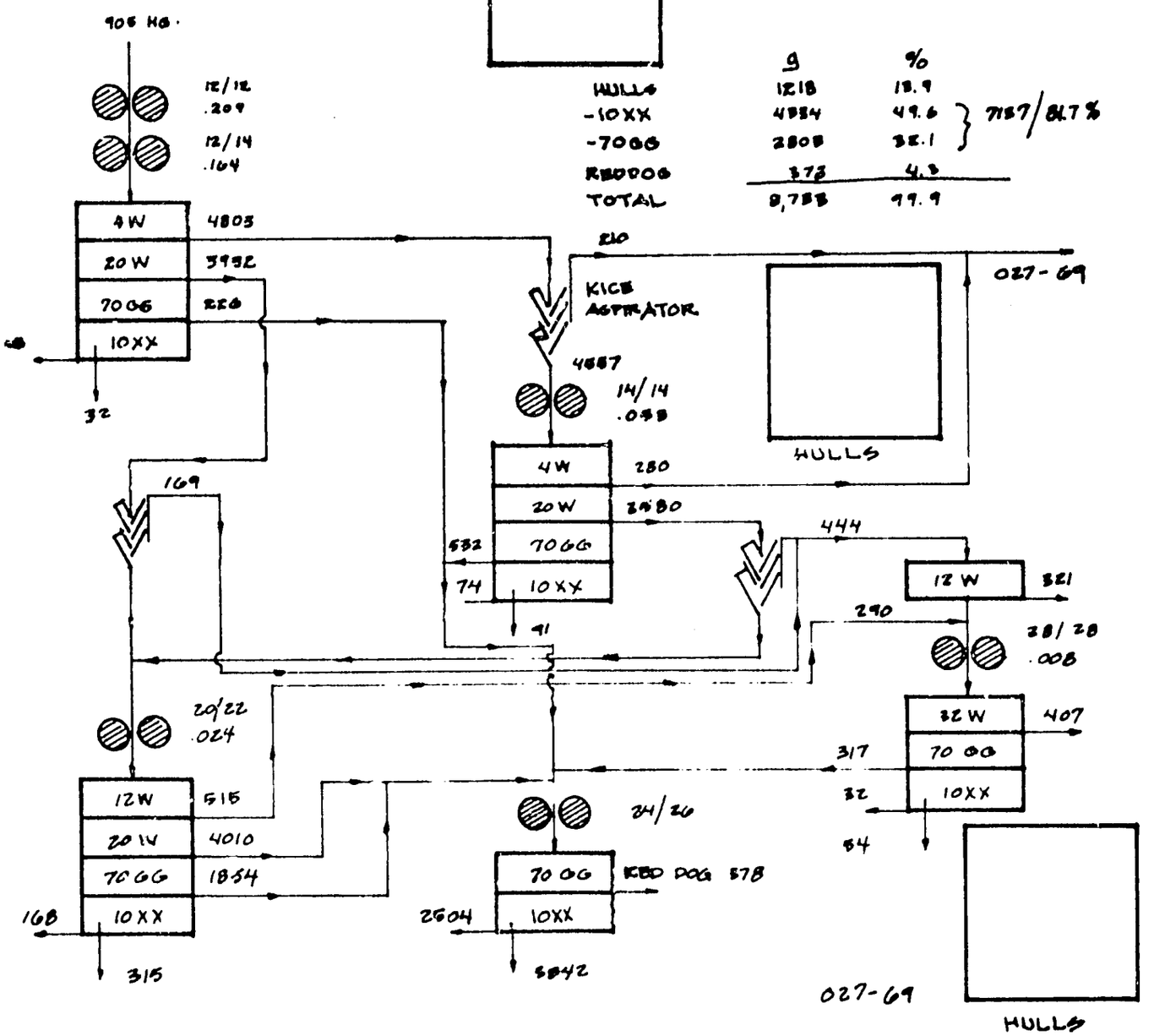

	g	%
HULLS	1218	13.9
-10XX	4354	49.6
-70GG	2808	32.1
REDDOG	378	4.3
TOTAL	8,758	99.9

7157/81.7%

Effect of Processing Treatment on Nutritive Value of Broad Beans

The evaluation of legume protein in food mixtures have been reviewed, but few workers have reported on the presence of toxic substances in edible legumes such as trypsin inhibitors and hemagglutinins.

Toxic factor (hemagglutinin) in broad beans have been reported in eastern countries where beans have considerable value as edible protein. Some cases of broad bean toxicity have been reported in U.S.A. due to ingestion of raw beans by sensitive humans. However, very little is known about its toxicity in general and much less is known about the processing of beans.

Compared to other foods, broad beans represent a relatively inexpensive source of food proteins. Thus, a complete study of broad beans nutritive value and in particular a consideration of its protein will be helpful in evaluating its place in protein deficiency problems in developing countries.

An experiment was designed to obtain information on the nutritive value of broad beans, its toxic effects (if any) and the effect of processing on the nutritive value of beans. Special attention has been given to protein quality of broad beans and its amino acid composition. The criteria used in this study was weight gain (body) of rats and protein efficiency ratio.

General condition of rats was observed during the experiment and at the end of the experiment the rats were autopsied to investigate any abnormalities in the internal organs (liver, kidney, intestine, and lungs).

A growth study with Charles River Strain Albino rats was conducted using six replications per diet. The rats were caged in a laboratory with environmental control and fed ad libitum.

The diets were composed of broad bean flour at 20% level and 85% extraction wheat flour 72% of the diet. Vitamins and minerals were supplied to meet NRC requirements.

Treatments:

1. Control (Casein + Starch)
2. 20% broad beans (raw) + 85% extraction wheat flour
3. 20% broad beans (dry heat) + 85% extraction wheat flour
4. 20% broad beans (soaked and dried) + 85% extraction wheat flour
5. 20% broad beans (soaked, dehulled, and dried) + 85% extraction wheat flour
6. 20% broad beans (steam treated 10 minutes, dried) + 85% extraction wheat flour.
7. 50% broad beans (raw) + 50% - 85% extraction wheat flour

The five week data showed no significant differences in average weight gain of rats fed diets composed of 20% raw beans and the processed beans. The rats on the diet containing 50% broad bean was higher in protein and also did not show any increase in the weight gain when compared to the rats fed other diets.

The PER of the diet containing 50% raw broad beans is low compared to other diets.

Table 15. Weight gain (0-5 weeks).

Rat No.	Diet I	Diet II	Diet III	Diet IV	Diet V	Diet VI	Diet VII
1	201	180	181	156	144	191	151
2	216	172	211	183	183	146	161
3	189	165	197	193	189	189	183
4	162	156	187	129	167	214	199
5	190	169	184	216	206	186	164
6	215	195	182	171	221	150	202
Total	1173	1037	1142	1048	1110	1076	1060
Average Gain	195.5	172.8	190.3	174.6	185.0	179.3	176.6

Table 16. Protein efficiency ratio.
(0-5) week

Rat No.	Diet I	Diet II	Diet III	Diet IV	Diet V	Diet VI	Diet VII
1	3.56	2.46	2.83	2.45	1.7	3.42	2.27
2	2.70	2.35	2.77	2.94	2.8	2.05	1.90
3	2.70	2.70	2.83	2.34	2.83	2.62	2.13
4	2.95	2.10	2.78	1.80	2.54	2.79	2.17
5	2.76	2.45	2.95	2.74	2.99	2.64	1.95
6	2.55	2.62	2.40	2.20	2.64	1.84	2.08
Average	2.8	2.74	2.78	2.44	2.68	2.5	2.0

Chapatis

Procedures for the manufacture of making atta have been developed and are depicted in AID-F-4, AID-F-12, and AID-F-28. Atta has been prepared for the several nutritional organoleptic and other studies being performed under the contract project.

In addition to the conventional atta, a preliminary study has been started to find the chapati baking characteristics of each flour stream and millfeed product from the KSU Pilot Mill.

SAMPLES PRODUCED AT KANSAS STATE UNIVERSITY

AID-F-4
JUNE 1968

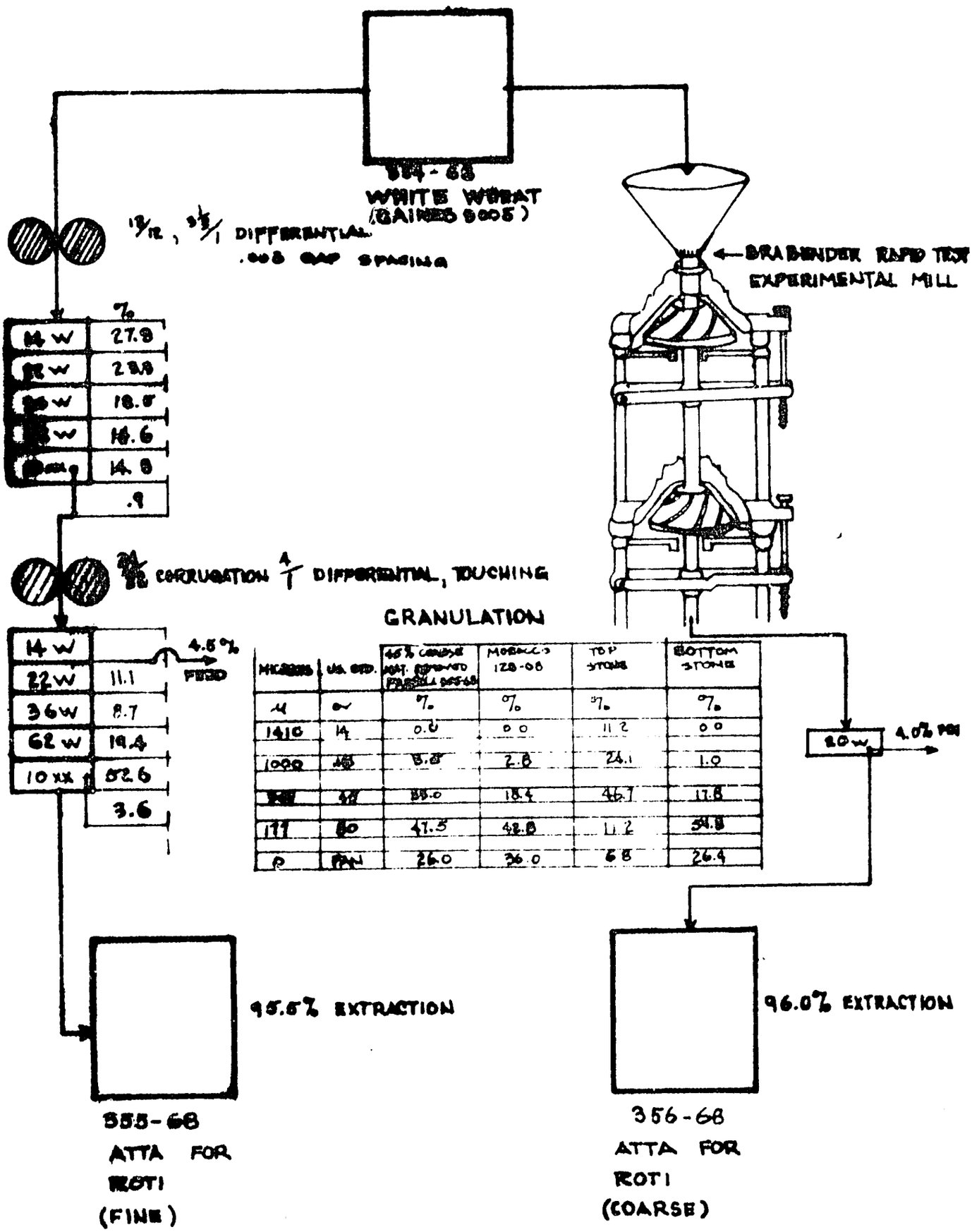

MICRONS	U.S. STD.	45% COARSE MAT. REMOVED FROM ROLLS 555-68	MOSAICS 128-08	TOP STONE	BOTTOM STONE
4	~	%	%	%	%
1410	14	0.0	0.0	11.2	0.0
1000	18	5.8	2.8	24.1	1.0
[illegible]	40	35.0	18.4	46.7	17.8
177	80	47.5	42.8	11.2	54.8
P	PAN	26.0	36.0	6.8	26.4

AID-F-18

ATTA PRODUCTION

WHITE WHEAT

PROT. _____
ASH _____
MOIST. _____
FAT _____
FIBER _____

401-68
BIN 47

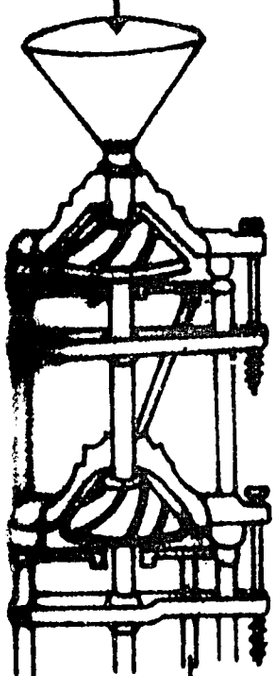

20LW

PROT. _____
ASH _____
MOIST. _____
FAT _____
FIBER _____

402-68
FEED

PROT. _____
ASH _____
MOIST. _____
FAT _____
FIBER _____

403-68
ATTA

GRANULATION

KANSAS STATE UNIVERSITY Manhattan, Kansas 66502

CURRICULUMS IN
MILLING TECHNOLOGY
FEED TECHNOLOGY
BAKERY MANAGEMENT

DEPARTMENT OF GRAIN SCIENCE AND INDUSTRY
MILLING INDUSTRIES BUILDING
TELEPHONE: 532-6201

AID F - 28

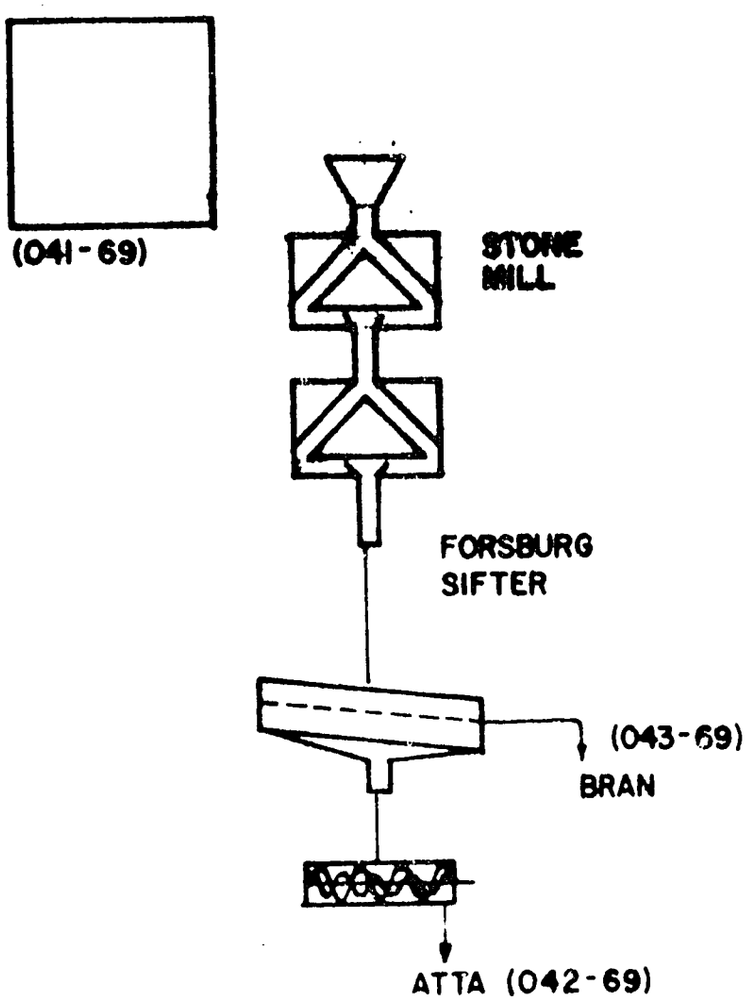

US. STD.	GRAMS	%	GRAMS	%	%
14	0	0	0	0	0
45	26	13	29	14.6	17.0
80	125	62.5	109	55.0	57.0
PAN	49	24 5	60	30.4	26.0

Supplementation of Atta Products With Bean Flours

Six hundred pounds of 97% extraction atta from Gaines white wheat was milled on a stone mill. Milling and sizing according to procedures previously given in AID-F-12. This atta was supplemented with 70% protein soy flour at 5, 10 and 15 percent level. A second series of supplements was made using chick pea flour at the 5, 10, 15 and 20 percent levels. Still another set of supplements was blended using broad bean flour at 5, 10 and 15 percent levels. Further supplementation was carried out using blends of cottonseed flour, marine protein concentrate at specified levels of concentration.

Preparation of Atta Products

Chapatis:

The above mentioned blended materials were prepared and cooked in the following manner:

Formula and Method of Cooking Chapatis:

3 lbs. atta
1 tbsp. salt
1 tsp. oil
878 ml. water

Mix together atta, salt, oil and some water in Hobart mixing bowl on low "1" speed until dough forms. Add remaining water and mix. Then run mixer on "2" speed for approximately one minute (until well mixed).

Place dough in pan, with slightly damp hands pat top and cover with another pan. Rest dough for 30 minutes.

Heat electric teflon griddle to 400°F. Make 2 1/2" x 1/4" patties of the dough. Roll each into a 6" circle on lightly floured board. Bake on both sides, then turn and puff by pressing chapati with a padded cloth. Turn again and puff the other side. Remove from griddle. Cover cooked stack of chapatis with a cloth.

With each addition of soy flour more water is needed.

Parathas:

Formula and Method of Cooking Parathas:

3 lbs. atta
2 tbsp. salt
3 tsp. oil
890 ml. water

Mix together atta, salt, oil and some water in Hobart mixing bowl on low "1" speed until dough forms. Add remaining water and mix. Then run mixer on "2" speed for about one minute.

Place the dough in a covered pan.

Heat the griddle to 400°F.

Roll dough into 2 1/2 inch diameter by 1/4 inch thick flat patty. On pastry board lightly floured with atta roll into 6 to 8 inch circle. With pastry brush paint circle with one teaspoon of oil.

Fold circle into thirds then fold twice forming a square. Dust with atta. With rolling pin roll into thin square.

Bake one side, turn, paint with oil, bake, turn, paint other side with oil and bake. Remove from griddle.

Cover with dry cloth until cool.

With each addition of soy flour more water is needed.

Nan:

Formula and Method of Cooking Nan:

1362 gms atta
27 gms compressed yeast
40 gms oil
20 gms salt
895 ml. water

Preheat the revolving oven to 500°F. Dissolve the yeast in some of the water. Mix together all ingredients and some water in the Hobart mixing bowl on low "1" speed. Add remaining water and mix on "2" speed for one minute. Remove the dough from bowl and place in a pan; cover with a damp cloth. Let the dough rise for one hour or more.

Weigh the dough into 120 gms portions. Roll these on lightly floured board into 1/2 inch thick circles. Bake in oven without rack for 3 minutes on first side and 2 minutes on the second side. A small amount of moisture should be in the oven. Wrap baked nan in dry cloth.

Puries:

Formula and Method of Cooking Pures:

3 lbs. atta
9 tbsps oil
2 1/2 tbsps salt
758 mls. water

Heat oil for deep fat frying to 390° - 410°F.

Mix together all ingredients and some water in the Hobart mixing bowl on low "1" speed. Add remaining water and mix on "2" speed for one minute. Remove the dough from the bowl and place in a pan; cover.

Divide the dough into 1" round patties, place in plastic bag, sprinkle with oil lightly, shake. Roll each patty into thin 2 inch circles. Deep fat fry. When circle puffs, turn then remove in 5 seconds. Puries should not be browned.

Samples of all atta products were organoleptically evaluated by a panel of judges.

The remaining samples of the atta products were packaged in tightly sealed plastic bags, placed in fiber drums and stored at -10°C.

These products will be analyzed and tested in biological feeding trials, to determine the nutritional values.

Chapati Report I

95% Extraction Gaines Wheat Atta With 0-15% Fish Meal Flour

Initial organoleptic work has been completed on a series of fish meal flour-supplemented chapatis prepared in the laboratories of the department of Foods and Nutrition. The test attas were made from 95.8% Extraction Gaines wheat flour supplemented at the 0, 5, 10, and 15% levels with fish meal flour (Alpine MPC).

PREPARATION

Preparation of chapatis was carried out according to a standard method for unsupplemented chapatis, derived from a review of methods previously employed by researchers as well as subsequent interviews with and demonstrations by Indian and Pakistani students at KSU.

Our method closely coincides with that of Chaudry given in Progress Report No. 1. Chaudry also was working with 95% extraction Gaines wheat, from which he was able to produce chapatis acceptable to a panel of Indian and Pakistani students.

	Chaudry	Archer
flour	95% Gaines	95% Gaines (300 g)
water	70-73%	71% (207 ml. demin. distilled)
mixing time	Hobart N-50	Hobart N-50; 1 min., low; 3 min., med. speed
water added	-------	5 ml. (demin. distilled)
resting time	25-30 min.	30 min.
mixing time	-------	1 min., medium
dough ball size	50 g.	50 g.
chapati diameter	6-7 in.	6 1/2 in.
flour for rolling	as needed	1 g.
cooking temperature	554-572°F	440-460°F
cooking time	2 min.	45-45-10 sec. (surface 1, surface 2, surface 1)
cooking utensil	hot plate	aluminum griddle
heat source	gas burner	gas burner

Chaudry reported that he used 70-73% water to make a chapati dough of proper consistency from Gaines wheat. Our experimentation with these levels of moisture indicated that 71% water would yield a workable dough.

Our preliminary work also indicated that 4 minutes of mechanical mixing with the Hobart N-50 mixer and dough hook attachment was comparable to the 10-15 minutes of hand kneading employed by other workers.

Chaudry designated 25-30 minutes as a "proper" dough resting time. According to the literature, resting may be important in that it (1) allows maximum hydration of the various constituents of the atta, which is necessary to optimum dough development and (2) stimulates enzymatic activity which tends to cause breakdown of the starch-protein complex. Both conditions are required for well puffed, pliable chapatis. Our experience reinforced the choice of 30 minutes as a "proper" resting time, in that increases in the rest period up to 3-4 hours did not measurably affect the properties of the control chapatis.

The 50 g. dough ball size employed by Chaudry was used for our standard, since it represents a medium-sized chapati as compared to the 25-100 g. array of chapati sizes reported in the literature.

Since maximum extension of the dough seems to be desirable in rolling out a chapati, we arrived at a 6 1/2 inch chapati diameter as the maximum size to which the dough ball could be rolled and subsequently handled. The cooking temperature and time we have adopted as standard are similar to those employed by Hedges, another worker in the department of Foods and Nutrition who cooked chapatis on the same heat source and grill that we are currently using.

The aforementioned standard procedure was derived not to yield a "perfect" chapati, but rather to provide a reproducible test medium for further research. It was used for the preparation of all chapatis

(supplemented as well as controls), since we wanted to be able to attribute differences among chapatis to the differences in atta composition alone.

ORGANOLEPTIC EVALUATION

The raw flours of the series were used for orientation, prior to preparation and examination of the hot chapatis. Examination took place on two phases. First, the 5, 10, and 15% samples were "screened" to determine whether any were off and thus could be eliminated without further examination. Such screening included the mixing and baking properties of the dough as well as aroma, flavor, texture, and appearance of the chapatis.

During the second phase, a standard procedure for the examination of samples was followed. Chapatis were prepared one at a time. At the end of the cooking period, the chapati was removed from the grill, placed on a preheated china plate, covered with a cloth, and immediately delivered to the panel room. There the chapati was torn into halves and examined for aroma, flavor, texture, and appearance. Since a single chapati is by no means homogeneous with regard to either aroma or flavor and since it changes character as it cools, the outside surfaces as well as the inside were examined when hot and after cooling. The evaluation process for each sample was repeated until it was believed that each chapati had been adequately characterized.

FISH MEAL FLOUR

The fish meal flour was described as grayish-green and powdery in appearance. Its aroma was definitely clammy and alkaline. Its flavor was composed of fishy, alkaline and lingering clammy aromatics, as well as salty taste, and sensations of mouth-fullness, grittiness, and drying attributed to its powdery form.

FISH MEAL SERIES

The results are depicted in Table 17.

Table 17. Chapatis.
(95% Extraction, Gaines wheat atta)

	% Blends of Marine Protein Concentrate Alpine Geoph. Assoc., Inc.			
	0	5	10	15
Dough handling	+	-	-	-
Raw flour flavor	+	-	-	-
Aroma - mixing	+	-	-	-
Aroma - cooking	+	+	+	+
Chapati appearance	+	-	-	-
Aroma examination	+	?	-	-
Flavor examination	+	?	-	-
Apparent digestibility	+	+	+	+

KEY
+ : Similar to control.
- : Different from control.
? : May not be too different.

1. Fish meal flour aroma was detectable in all of the supplemented raw flours.
2. Fish meal flour aroma diminished during mixing of the doughs and was not noticeable in any of the chapati samples during cooking.
3. The mixing properties of the 15% supplemented dough were noticeably different from the other supplemented samples or the control in that the dough was dry and crumbly and did not form a ball until the end of the mixing period.
4. The 15% chapati sample was eliminated after initial screening due to extreme off-ness in both aroma and flavor together with an atypically dark appearance and leathery texture.
5. Fish meal flour aroma and flavor were detectable in the 10% chapati sample, which was characterized as poorly puffed and having alkaline, clammy, gritty integers, and suppressed wheat character.

6. The 5% chapati sample was not perceptibly off in flavor but had a suppressed wheat character.

DISCUSSION AND CONCLUSIONS

The work reported is part of a larger project to point out the organoleptic effects of protein supplementation in chapatis. The primary objective of this work -- to characterize the effects of fish meal flour (FMF) supplementation has been fulfilled.

In general, it is concluded that FMF produced some effects common to these supplemented samples, and the effects became more marked with increments in supplementation.

First of all, it affected the mixing and cooking properties of the doughs and the ease with which they could be handled. As reported earlier, FMF aroma was noticeable during mixing. In addition, due to its highly absorptive nature, additions of FMF initially stiffened the doughs. However, after the resting period, the supplemented doughs were slacker than the control and difficult to shape and roll. During the cooking process, FMF-supplemented chapatis tended to stick to the grill.

Secondly, supplementation with FMF brought about changes in appearance, texture, and flavor of all the chapatis. Increments in FMF yielded chapatis that were progressively darker, more crusty on the outside and gummier on the inside, and less sweet and wheaty.

Aside from the aforementioned effects of FMF supplementation with regard to all chapatis, FMF aroma and flavor as described earlier were detectable in the 10 and 15% samples.

Since the goals of this AID project include creating a locally acceptable supplemented chapati, the relevance of our assessment of these samples to consumer acceptance should be clarified.

Supplementation with fish meal flour has been reported herein to (among other things) produce less pliable, darker, and less sweet chapatis. According to the literature, pliability, light creamy color, and sweet taste are important quality considerations for chapatis.

However, many effects perceived under controlled laboratory conditions would not be noticed by the consumer in his native habitat.

Thus, based upon this work, it might be reasonable to believe that the 15% sample would be unacceptable to the intended consumer, since it lost virtually all of its chapati identity. The 10% sample may or may not be seen as "off" in the eyes of the consumer depending upon such variables as preparation procedures -- by whom and how, accompanying foodstuffs, mealtime distractions and personal preference and prejudice.

Chapati Report II

95% Extraction Gaines Wheat Atta With 0-15% Cottonseed Flour

Initial organoleptic work has been completed on a series of cottonseed flour-supplemented chapatis prepared in the laboratories of the department of Foods and Nutrition. The test flours were made from 95.8% extraction Gaines wheat flour supplemented at the 0, 5, 10, and 15% levels with cottonseed flour (glandless, Texas A & M University). All flours were held in refrigerated storage to prevent deterioration.

Preparation and organoleptic evaluation of chapatis were carried out according to standardized methods described in Chapati Report No. 1.

COTTONSEED FLOUR

Cottonseed flour was described as greenish-tan, both powdery and particulate in appearance, and interspersed with black specks. Initially, the odor of the cottonseed flour was characterized by an oily-gassy-rubbery aromatic. Its flavor was marked by the same aromatic and was further described as oxidized, salty, sweet, green vegetation-like, bitter, and astringent, accompanied by a drying sensation and salivation. The cottonseed flour caused a tongue bite and stomach flatulence.

During the seven week's time between initial and final examinations, the flour seemed to "air out". The rubbery aromatic was lost, and the oily and gassy aromatics diminished in intensity.

COTTONSEED FLOUR SERIES

The results are depicted in Table 18.

Table 18. Chapatis.
(95% Extraction, Gaines wheat atta)

	% Blends of Glandless Cottonseed Flour (Texas A & M University)			
	0	5	10	15
Dough handling	+	+	-	-
Raw flour flavor	+	+	-	-
Aroma - Mixing	+	+	-	-
Aroma - Cooking	+	+	+	+
Chapati appearance	+	+	-	-
Aroma examination	+	+	-?	-
Flavor examination	+	+	-?	-
Apparent digestibility	+	-	-	-

KEY:
+ : Similar to control.
- : Different from control.
? : May not be too different.

Raw Flours:

1. The black specks present in the cottonseed flour were noticeable in the 10 and 15% flour blends and doughs.
2. The cottonseed flour darkened the 5 and 10% flour blends, but imparted greenish-tan color to the 15% blend.
3. The presence of cottonseed flour was detectable in the flavor of all supplemented raw flours.
4. The full flavor spectrum of cottonseed flour was observed in the 10 and 15% raw flours, whereas the flavor of the 5% sample presented only the greenish and not the so-called oily-gassy-rubbery aromatic.

Chapati Preparation:

1. Cottonseed flour aroma was briefly noted early in the mixing period o he 10 and 15% supplemented doughs.
2. Increments in cottonseed flour from 0-15% resulted in stickier doughs after mixing, but drier and more inelastic yet easier to handle doughs after resting.

3. No cottonseed flour aroma was detected during the baking of any supplemented chapatis.

Chapatis:

1. Flatulence resulted from the tasting of all chapatis made from flours containing cottonseed flour supplementations.
2. The 15% supplemented chapatis were redolent of cottonseed flour in both aroma and flavor and contained black specks from the cottonseed flour.
3. The 10% supplemented chapatis were also redolent of cottonseed flour in aroma and flavor but at a low level.
4. The 5% supplemented chapatis contained only the greenish and not the oily-gassy-rubbery cottonseed flour aromatic in the aroma and flavor and were sweeter and fuller in aroma and flavor than the other supplemented chapatis or the control.

DISCUSSION AND CONCLUSIONS

Based upon the effects of supplementation presented in this report, inferences can be drawn with reference to product acceptability by the intended consumer of the chapatis.

Supplementation with up to 15% cottonseed flour had little adverse effect on the mixing or handling properties of the dough. Although cottonseed aroma was detected during the early stages of mixing the 10 and 15% supplemented doughs, this aroma was noted only by a person familiar with cottonseed aroma. An Indian student assisting with preparation failed to perceive it. Whereas the supplemented doughs were stickier than the control after mixing, they were more inelastic and easier to handle than the control after resting.

No effects of supplementation were observed during the cooking process. However, the use of cottonseed flour as a supplement altered the appearance of the chapati dough and the baked chapatis. Cottonseed flour was detectable in the 10 and 15% supplemented doughs and the 15% supplemented chapatis by the presence of black specks, presumably from the pericarp of the cottonseed. The Indian student assisting with chapati preparation believed that Indian and Pakistani women would not use even the 10% supplemented flour because of the connotation of the foreign particles in the dough. Supplementation at the 15% level produced greenish-tan colored chapatis in contrast to the creamy white controls.

Cottonseed flour aroma and flavor would seem to limit its use as a chapati supplement only at the 15% level. Although the 10% chapati sample also was found to contain full cottonseed flour character in its aroma and flavor, repeated examinations were required to detect it even under controlled laboratory conditions. The chapati consumer in his native habitat probably would not be able to perceive cottonseed flour aroma and flavor at this level. And even if the cottonseed flour aroma and flavor were noted by the consumer in the 10% supplemented chapati sample, mere notation of its presence would not necessarily be equated with "offness" leading to rejection of the chapati. That is, cottonseed flour aroma and flavor, unlike that of fish meal flour, for example, is not completely foreign to wheat flour character. Thus consumer acceptance or rejection of a cottonseed-flour-supplemented chapati would depend on not only his recognition of the presence of, but also his personal reaction to cottonseed flour aroma and flavor.

Aside from its limiting effects on the 10 and 15% supplemented chapatis, the addition of cottonseed flour seemed to favorably affect the 5% supplemented chapatis. As previously mentioned, these chapatis were sweeter and fuller in flavor and aroma than the other supplemented samples or the control.

It remains to be seen whether regular consumers of chapatis would observe the aforementioned plus factors. However, the flatulence that resulted from the consumption of any of the supplemented chapatis would be apt to be noticed.

The use of cottonseed flour as a chapati supplement appears to be contra-indicated unless a flour can be obtained which does not produce the undesirable appearance factors and indigestibility observed.

Nutritional Evaluation of Supplemented Chapatis

In 1968, the results of Rat Study I: Studies on minimum supplementation of high extraction flour indicated that omission of methionine, valine, and threonine from a lysine-supplemented 97% extraction wheat diet improved the PER of rats. Supplementation with less than the NRC requirement of calcium produced an acceptable PER.

Rat Study II

In this experiment we studied the effect of cooking (as chapatis) on some of the diets from the previous study plus a diet supplemented with broad beans. All of the diets contained 10% protein. Four diets were prepared using 97% extraction wheat flour supplemented with vitamins and minerals so that the diets (wheat + supplements) met the NRC minimal requirements for the rat. These were fed without cooking. Four additional diets were prepared from similar mixtures cooked as chapatis, dried, and ground. Vitamins, minerals, and cornstarch were added to the chapatis before cooking, but corn oil was added after cooking. The diets were as follows:

A--lysine, threonine, valine, and methionine supplement

Diet I--uncooked,

Diet II--cooked;

B--lysine supplement

Diet III--uncooked,

Diet IV--cooked,

C--same as B except half of the calcium supplement was omitted

Diet V--uncooked,

Diet VI--cooked;

D--ground broad bean (10% of flour) supplement

Diet VII--uncooked,

Diet VIII--cooked.

The rations were fed to groups of eight male weanling albino rats of the Sprague-Dawley strain for six weeks.

Weekly cumulative weight gains were plotted (Figure 12). Early in the study the rate of gain was higher for the cooked rations (II, IV, VI, and VIII). Later the rate of gain increased for the uncooked diets and in some cases surpassed the rate of gain for the cooked diets during the sixth week.

Protein efficiency ratios were calculated at the end of two, four, and six weeks (Table 19). Analysis of variance of the PER for each of the time periods indicated: 1) the diets containing broad beans (VII and VIII) were inferior to those containing purified amino acids, 2) cooking did not improve the protein efficiency ratios of any of the diets, 3) there were no significant differences between the diets supplemented with lysine alone and lysine, threonine, valine and methionine, 4) there were no significant differences between the diets supplemented to contain the NRC requirement of calcium and a reduced amount of calcium. Items 3) and 4) confirm the results obtained in Rat Study I.

Figure 8. Cumulative weight gain of rats.

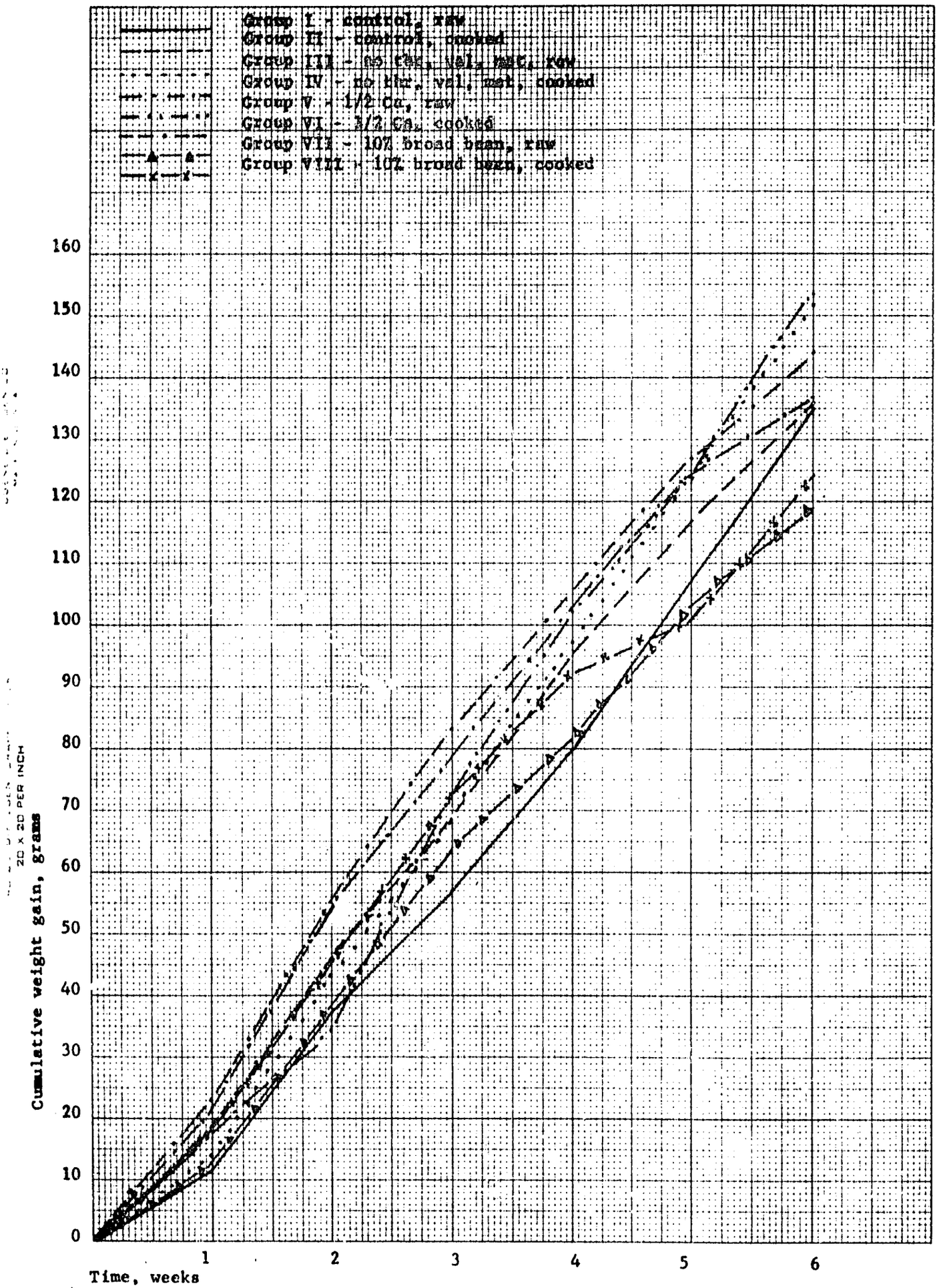

Table 19. Ordered mean protein efficiency ratios and significant differences (P 0.05) containing purified amino acids or ground broad beans.

2 weeks		4 weeks		6 weeks	
Diet	PER	Diet	PER	Diet	PER
VI	3.004	VI	2.453	III	2.234
IV	2.785	V	2.438	V	2.204
II	2.694	III	2.393	I	2.201
III	2.657	IV	2.387	II	2.141
V	2.648	II	2.375	VI	2.115
VIII	2.556	I	2.263	IV	2.104
I	2.537	VIII	2.242	VIII	1.991
VII	2.418	VII	2.116	VII	1.960
$LSD_{.05}$ = 0.208		$LSD_{.05}$ = 0.161		$LSD_{.05}$ = 0.140	
VI>IV,II,III,V,VIII,I,VII IV>VIII,I,VII II,III,V>VII		VI,V>I,VIII,VII III,IV,II>VII		III,V,I,II>VIII,VII VI,IV>VII	

Studies on Storage Life of Chapatis and Nan

Chapatis and nan are a staple food item for both rich and poor in Pakistan and India. At present these products are produced, stored and used in a very short time because they become stale in a few hours. The preservation of chapatis and nan is needed in order to evolve a manufactured, distributed product that will permit fortification at the manufacturing plant.

About 90 percent of the grain produced in Pakistan and India is milled into atta and consumed in the form of chapatis and nan. Chapatis and nan constitute more than 75 percent of the total food intake of the people of Pakistan and India.

The purpose of this study was to determine the effect of different packaging materials in their moisture retention ability, and to isolate and identify the spoilage microorganisms in chapatis and nan.

Six wrapping materials were tested and polyethylene bags were selected to wrap chapatis and nan for further study, because they afforded best protection against moisture loss from chapatis and nan over a period of seven days under high temperature storage (80-90°F).

The causitive spoilage organisms were found to be *Aspergillus niger*, *Aspergillus flavus*, *Aspergillus fumigatus*, *Rhizopus sp.* and *Penicillium lilacium*. Undesirable microorganisms present were *Bacillus megaterium*, *B. subtilis*, and *E. coli*. The desirable microorganisms present were *Lactobacillus bulgaricus*, *L. fermenti* and *L. lactis*.

Gaines variety wheat was conditioned to 15% moisture content and milled by a procedure developed experimentally to produce 95% extraction atta that passed through a 32-wire sieve.

Proximate analyses and physical dough characteristics of atta were determined. Processing conditions for chapatis and nan were standardized; 60% water absorption, 1.5% sodium chloride were found to produce the best quality products. A formula containing 2% compressed bakers yeast resulted in best quality nan.

Several antimicrobial agents, antioxidants and softeners were added to determine the effect upon chapati quality and storage life.

Chapatis and nan produced with the incorporation of 0.2 or 0.3% calcium propionate in the formula had a storage life of seven days.

Addition of 0.01 or 0.015% butylated hydroxy anisole (B.H.A.) improved the keeping quality without affecting the flavor of either chapatis or nan.

Adding sodium chloride in formulations improved the efficiency of calcium propionate as an antimicrobial agent. The requirement of calcium propionate could be reduced by increasing the sodium chloride content to its acceptability limits. Shortening at 3% level in the dough improved the overall quality of chapatis and nan.

Puffing quality of chapatis and nan was markedly improved by adding 2 or 3 SK units of bacterial alpha-amylase/100 g atta in dough.

On storage chapatis and nan with 2 to 3 SK units of bacterial-alpha-amylase per 100 g atta retained moisture had improved keeping quality and preserved texture. Chapatis and nan, containing 2 to 3 SK units of bacterial-alpha-amylase per 100 g atta, stored in polyethylene bags which exhibited maximum storage life were analyzed for protein, ash, crude fat and fat acidity. Similar analyses were run on the same formulated freshly prepared chapatis and nan. During storage a slight reduction in protein content resulted and a slight increase fat acidity was shown for chapatis and nan. Chapatis and nan stored up to seven days were found to be free from off flavors and were organoleptically acceptable.

Cous Cous

Processing

Semolina:

Semolina granulation varification--According to A. B. Ward, Moroccan Semolina Samples No. 22-68 and No. 23-68 are combined on a 30:40 part basis respectively for making cous cous. Based on this information a commercial semolina No. 362-68 obtained from The Peavey Company was found to be the equivalent, as far as granulation, to the combined Moroccan Semolinas used for making cous cous. Granulation data to varify this are shown below:

Sieve Size (U.S. Std.)	Percent No.362-68	Percent 30:40 No.22-68:No.23-68
on 14	-	-
on 18	-	.34
on 45	55.4	53.85
on 80	39.5	39.36
Pan	5.0	6.46
Total	99.9	100.00

Several milling extractions were suggested by faculty members as that used by the "poor" people in Morocco for making a product from durum wheat suitable for cous cous. These extractions ranged from 90% to 97%. A procedure was worked out for milling a 97% extraction durum product. However, when this was shown to a team of visiting Moroccans involved in the grain industry they indicated the 97% extraction durum product contained a large excess of bran thus making it undesirable for cous cous. The 97% extraction durum product was then sifted thru an 18 wire (U.S. Std.) under the direction of several of the Moroccans and it was their opinion that

KANSAS STATE UNIVERSITY *Manhattan, Kansas 66502*

CURRICULUMS IN
MILLING TECHNOLOGY
FEED TECHNOLOGY
BAKERY MANAGEMENT

DEPARTMENT OF GRAIN SCIENCE AND INDUSTRY
MILLING INDUSTRIES BUILDING
TELEPHONE: 532-6861

AID F 31

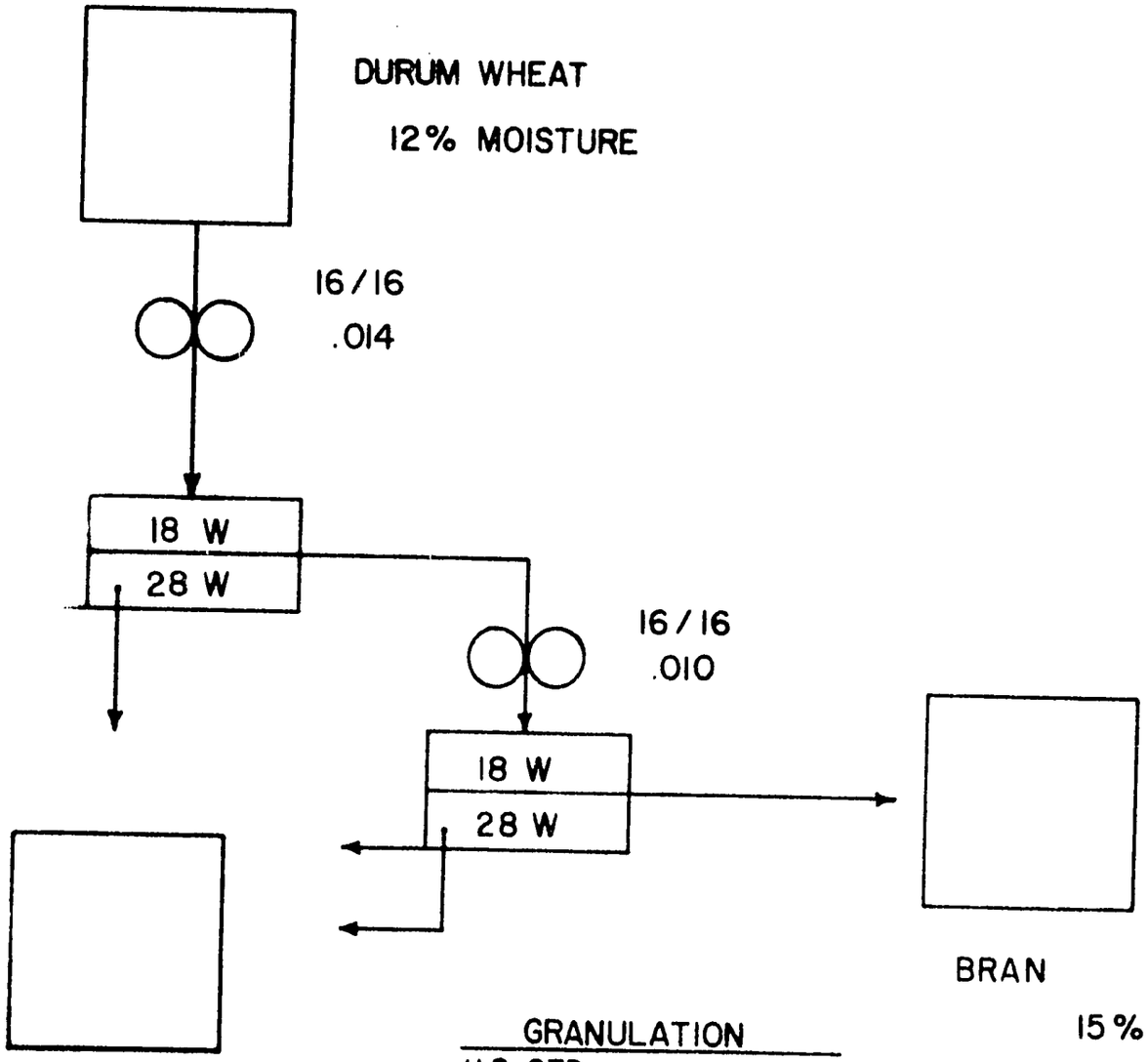

GRANULATION

U.S. STD.	%
20	28.9
40	55.8
60	7.3
80	4.0
PAN	3.3

this thru material was similar to that which would be used for making cous cous in Morocco. This durum product was an 85% extraction semolina and the milling flow and granulation are shown in AID-F-31.

Agglomeration:

Agglomerating the semolina and 85% extraction semolina was accomplished by using a Hobart N-50 Mixer equipped with standard mixing bowl and wire whip. The agglomeration was carried out in 1000 g batches. The agglomerated material was screened by using a U. S. Standard eight wire, then through a U. S. Standard 12 wire (medium cous cous) and finally through a U. S. Standard 18 wire (fine size cous cous).

After agglomerating and screening, the material may be handled in three ways: (A) dry directly; (B) steamed for seven minutes in cous cous steamer and then dried; (C) autoclaved for four minutes at 121°C 15 lbs. pressure. The products are dried in a forced air oven at 50°C for 20-24 hours. Dried products should have a moisture content of between 3-5%.

Observations were made of semolina cous cous prepared by the three methods listed above. The autoclaved sample had the brightest yellow color. The seven minute steamed sample had a slightly less bright yellow color and the agglomerated and dried sample had a dull yellow color. This probably indicates some enzyme (lipoxidase) activity remained in the agglomerated and then dried sample; and in the agglomerated, steamed for seven minutes and then dried samples.

Cous Cous Preparation:

It was also observed that the three samples described above required different treatments when preparing them for steaming.

Preparation of Agglomerated and Dried Sample

Spread the agglomerated material on a tray - a layer of about 1 1/2 inches thick. Moisten slightly, shake the cous cous with the hands to spread moisture throughout the mass and to make the granules swell. Then follow the general steaming procedure given below.

Preparation of Agglomerated Steamed or Autoclaved and Dried Samples

Place cous cous into a strainer and dip it into cold tap water for 10 seconds. Remove cous cous from the water and allow it to drain for 30 seconds. Then place the cous cous on to a tray and allow it to stand for about five minutes. Mix the cous cous by hand or with a spoon to break up any large lumps and for aeration. Then follow the general steaming procedure given below.

General Steaming Procedure

Place the moistened cous cous in the upper part of the cous cous steamer and fill the lower section with water (about 3/4 full). Steam the cous cous for 30 to 35 minutes (begin timing when steam appears through the granules). Remove top part of the steamer and place cous cous into a tray. Spread granules with spoon and then sprinkle about water (60 g H_2O/ 400 g starting cous cous) and mix again with a spoon. Place cous cous grain into steamer again and steam for another 30 to 35 minutes as before. Again remove cous cous from steamer after the second steaming period and add water as before. The cous cous is given a final 30 to 35 minute steaming and then served.

The final moisture of the steamed cous cous will range between 50-55%. It is important for the cous cous particles to remain particulate and not lump together.

It was found that, upon adding broad bean flour to the semolina at the rate of 5, 10, and 15%, an appropriate adjustment in the amount of water added to the semolina mixture at the agglomeration step had to be made. The broad bean flour caused a reduction in the required amount of water.

The percent protein and moisture of semolina and 85% extraction durum wheat products supplemented with 15% broad bean flour and processed into cous cous are given below.

Sample	% Protein	% Moisture
100% semolina	13.22	4.14
85% semolina plus 15% B.B.*	14.31	5.14
100%, 85% extraction durum	14.75	5.13
85%, 85% extraction durum plus 15% B.B.*	16.17	4.41

*B.B. = Broad Bean Flour

SAMPLES PRODUCED AT KANSAS STATE UNIVERSITY

AID-F-3
JUNE 1968

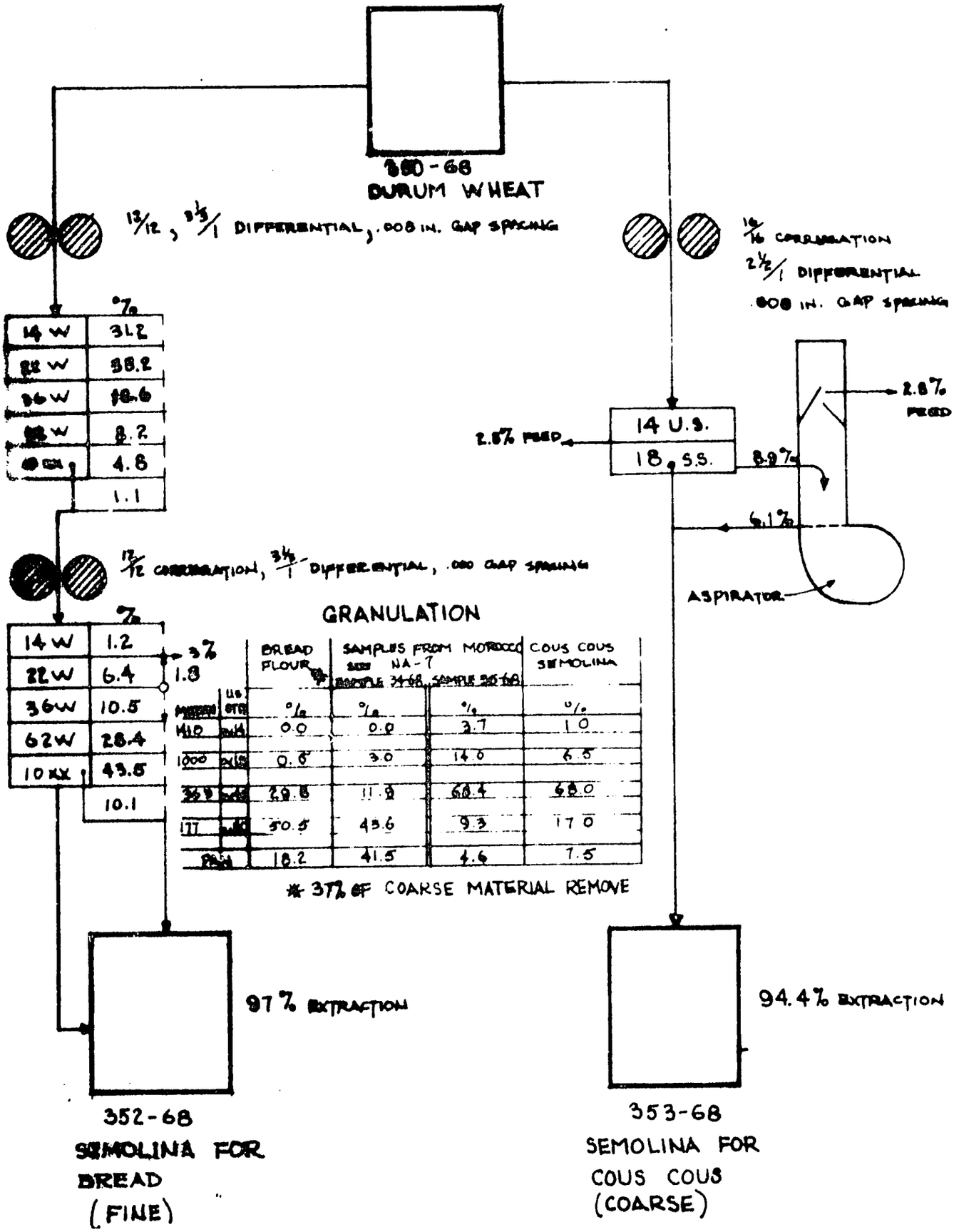

A1 D F 2

DEPARTMENT OF GRAIN SCIENCE AND INDUSTRY
MILLING INDUSTRIES BUILDING

KANSAS STATE UNIVERSITY *Manhattan, Kansas 66502*

DURUM MILLING

361-68

HARD DURUM AMBER

AMBER DURUM

DURUM

RED DURUM
PROTEIN 14.5%
FEED GRAIN

DURUM CHARACTERISTICS
- HARD VITREOUS ENDOSPERM - MILLERS DESIGNATE THE DURUM GRAIN AS SEMOLINA TYPE OR FLOUR TYPE.

GRAIN CLEANING & CONDITIONING

- SCALPERS — TO REMOVE VERY COARSE MATERIAL
- MILLING SEPARATOR — REMOVE MATERIAL COARSER & FINER THAN WHEAT
- DISC OR INDENT SEPARATORS — REMOVE OATS & CRACKED WHEAT
- SCOURING
- ASPIRATION
- STONERS WET OR DRY — REMOVE STONE GRIT
- GRAVITY TABLE MACHINES — REMOVE GRIT, ERGOT, MUD BALLS
- WASHING
- TEMPERING-SHORT — 2½-3½ HRS-1ST STAGE; ½ TO 1 HR-2ND TEMPER. TO 16 % LEVEL

MILLING - TWO BASIC PRODUCTS SEMOLINA & FLOUR

SEMOLINA

1-5-6 BREAKS {40-45% TOTAL ROLL SURFACE; .4 TO .5"/CWT ROLL SURFACE}
1-5-8 SIZINGS. ALL CORRUGATED LIGHT GRINDING
1-5 MIDDLINGS - SOME SMOOTH
1-3 LOW GRADES
1-3 TAILINGS
SIFTERS SURFACE .7 SQ.FT./CWT.
PURIFICATION - .25 SQ.FT./CWT (APPROX. TWICE AS MUCH AS BREAD WHEAT FLOW)
FINISHED SEMOLINA GOES DIRECT FROM PURIFIERS.

DURUM FLOUR

- REGRIND SEMOLINA OR PURIFIER MIDDLINGS STOCK
- REGRIND INCORPORATED INTO SEMOLINA FLOW
- STRAIGHT FLOUR FLOW

COMBINED UNITS COMPROMISE

SEMOLINA	SEMOLINA-FLOUR	FLOUR
100%	5-50%	100%

362-68 — SEMOLINA APPROX.% 60%

363-68 — 1ST CLEAR FLOUR 10.5%

364-68 — 2ND CLEAR FLOUR 4.5%

365-68 — MIDDS FOR ANIMAL FEED 25%

SEMOLINA SPECIFICATIONS
THRU 30 OVER 60 WIRE LONG GOODS - BATCH EXTRUDED PROCESS
THRU 40 OVER 80 WIRE LONG GOODS - AUTOMATED PROCESS
GRANULATE - VARIOUS PERCENTAGES OF FLOUR FOR END RESULTS - GUARDED SECRET ON PART OF SPAGHETTI MANUFACTURERS
GRIT - .0015 - IMPORTANT IN THIN WALLED EXTRUDED GOODS - SMEARS - TEARS.
COOKING QUALITY - ADEQUATE SHELL - NO GUMMYNESS - STAYS FIRM.
ABSORPTION - UNIFORM HYDRATION - LOW ABSORPTION DRY DOUGH - AS PRODUCT IS DRIED HIGH PERCENTAGE OF WATER MEANS GREATER DRYING - MORE BRITTLENESS OR FRAGILE PRODUCT. FARINOGRAPH - 27-35%
COLOR - YELLOW COLOR DUE TO HIGH PERCENTAGE PIGMENTATION (DOUBLE BREAD WHEAT)
- PARTICLE SIZE ALSO EFFECTS COLOR
- BROWNISH PIGMENT UNDESIRABLE, ESPECIALLY WHEN COOKED
- OPTICAL REFLECTANCE - FOR COLOR REFERENCE
ENRICHMENT - IS THE ONLY ADDITIVE.

Cous Cous Organoleptic Report I

70% and 85% Extraction Durum With
0-15% Broad Bean Flour

Orientative organoleptic work has been conducted on two series of cous cous prepared in the laboratories of the department of Grain Science and Industry to contain specific increments of broad bean flour in Durum flour...

(1) 70% extraction (Semolina) with 0, 5, 10, and 15% broad bean flour

(2) 85% extraction with 0, 5, 10, and 15% broad bean flour.

Because samples were limited, samples of each series were cooked simultaneously and examined only once for odor, flavor, texture, and appearance. The respective raw flours and uncooked cous cous were used for orientation purposes.

Additional observations included: volume readings before, during, and after steaming; organoleptic effects on reheating and additional steaming; odor changes from room temperature storage of raw flours.

It should be noted that this is a technical, as opposed to a consumer, assessment. Wherever possible, methods were standardized; samples were not cooked with or served with broth, sugar, raisins, or any additive; nor were they eaten with the fingers. The objective of the work was to point out and assess the effects of the broad bean additions.

RESULTS

The results are depicted in Table 20.

Semolina Series:

1. Broad bean flour aroma was detectable in all of the supplemented raw flours.

Table 20. Cous cous.

	Semolina (70% Extraction, Durum) % Broad Bean Flour Blends				85% Extraction Durum Wheat Flour % Broad Bean Flour Blends			
	0	5	10	15	0	5	10	15
Raw Flour Aroma	+	-	-	-	+	-	-	-
Raw Cous Cous Aroma	+	+	+	-	+	+	+	+
Cooked C.C. Appearance	+	-	-	-	+	-	-	-
Cooked C.C. Aroma	+	+	-	-	+	+	?	?
Cooked C.C. Flavor	+	?	-	-	+	?	+	+
Resteamed Flavor	+	+	±	±		NOT TESTED		
Volume, Raw	1	1	1	>1	1	1	1	1
Volume, Cooked	1	1	1	>1	1	1	1	>1

KEY

+ : Similar to control.
- : Different from control.
? : May not be too different.
± : Improved but still different.
>1 : Volume greater than control.

2. Broad bean flour aroma was detectable only in the 15% uncooked cous cous.
3. All uncooked samples in this series were different in color and were characterized as green, bitter, and beany in flavor.
4. Broad bean flour aromatics were noted in both the aroma and flavor of the cooked 10% and 15% supplemented cous cous and possibly in the flavor of the 5%.
5. The cooked cous cous were all visually different in color.
6. Resteaming the cooked samples on the following day for 20 minutes seemed to reduce the bitterness and beany character in both aroma and flavor of all supplemented samples.
7. After standing in covered beakers at room temperature for two weeks, the broad bean aroma of the supplemented flours was altered to butyric-like.

85% Extraction Series:

1. Broad bean flour aroma was detectable in the aromas of all of the supplemented raw flours.
2. This supplement-odor was not observed in any of the uncooked cous cous.
3. The flavor of the 10% uncooked sample was bitter and the 15% sample tasted beany in character.
4. None of the uncooked cous cous were different in color.
5. The aromas of the 10 and 15% cooked cous cous were found to be "atypical". That is, they possessed characteristics not typical of the control sample but not identifiable per se as a result of a single examination.

6. Broad bean flour was not detectable in the flavor of any of the cooked cous cous. However, the 5% sample was slightly bitter; bitterness (which sometimes is a clue to broad bean flour) was not observed in the 10 and 15% samples.
7. Only the control was distinguishably different in color from the darker supplemented cous cous.

COMPARISON OF SEMOLINA SERIES VS. 85% EXTRACTION SERIES

The semolina cous cous were yellower in color, more dense, and exhibited a lesser increase in volume as a result of wetting and steaming but a greater increase in volume as a result of broad bean flour supplementation. The 85% extraction series of cous cous was brannier in appearance, more difficult to wet (i. e., the bran floated to the top and would not absorb moisture at first), had more aroma which reflected in the flavor, and required extra steaming to make the texture as soft and moist as the semolina cous cous.

DISCUSSION AND CONCLUSIONS

The first objective of this work -- to point out the effects of broad bean additions -- is, in the main, fulfilled. One or more of the bitter, green, beany character notes of broad bean flour could be detected in the flavor of cooked semolina-based cous cous, especially at the 10 and 15% levels of addition. At the 15% level the uncooked cous cous may have been very slightly less dense and after cooking for the standard 60 minutes, the 15% were more expanded than the control. Visually, the color of the cooked semolina series became darker with increasing content of broad bean flour. As reported earlier, the broad bean additions were not so detectable in the 85% extraction series, not in flavor and color. The 15% addition in the higher extraction flour did not change the density of the uncooked cous cous, but it may have increased pickup of moisture in cooking.

In addition to nutritive goals, this AID 5013 project aims to create locally acceptable products. Criteria for acceptance are also criteria for assessing the organoleptic properties of the experimental products. Until we have more information on the responses of potential consumers of the products, the acceptance criteria are highly idealistic: no detectable differences.

In considering the detection of differences between the usual product and proposed products, we should keep in mind that consumers do not run paired comparison or triangle tests. Thus, differences observable by consumers are based on their memory or recollection of the product under their conditions of use. This means that some differences that are detectable under laboratory conditions would certainly be passed over in the real world. For example, the color differences observed in the semolina series. The color would become important in paired testing but not in presentation of a single sample.

It is conceivable that the broad bean character found in the flavor of the cooked 15% sample of the semolina series would be masked or covered when the cous cous are served under customary conditions--i.e., with sugar and raisins; with the meat stew made in the bottom part of the cous cous cooker. But if broad bean aroma had emanated from the cooker during the steaming process, this would alert the cook or anyone else who could smell the non-cous cous aroma. Once alerted, the person quite possibly would taste the cous cous and discover broad bean (that is, off-flavor) character.

Since this organoleptic work on cous cous was orientative, the quantity of samples was limited. Therefore, we did not carry out any repeat examinations nor were we able to check out the aromas during cooking.

Cooking instructions developed by Kirleis et al. have been followed without deviation. A standard method has to be followed in order to relate findings for various series or processes. But by an extra steaming period, we found it possible to bring texture of two 85% Extraction samples (control and 15%) up to the semolina par.

Another information-yielding probe involved reheating of day-old cous cous of the semolina series. As a result, the intensity of broad bean character seemed to be less. We were unable because of low supplies, to verify the possibility that a longer cook time would have been beneficial. The implication is that broad bean character is steam volatile and possibly extra heat treatment during processing would cause a significant improvement.

At first we visualized such heat treatment at the cous cous manufacturing stage. However, other observations indicate that heat treatment of the broad beans or the broad bean flour might be more appropriate. There was a drastic change in the aromas of the semolina series of flours which had been allowed to stand at room temperature for two weeks. This suggests enzyme activity and this possibility must be studied further.

Cous Cous Nutritional Studies

Rat Study I--Broad Bean Supplementation

The effect of cooking on durum wheat flour (70% and 85% extraction) with and without broad bean supplementation was studied. The flour was a coarse-ground material generally referred to as semolina. When used, broad beans replaced 10% of the wheat flour. Diets containing 10% protein were prepared from uncooked flour and flour which had been steamed as cous cous and dried. ANRC casein was used for the control diet. Vitamins and minerals were added to all diets to meet NRC recommended requirements for the growing rat. The diets were as follows:

Diet I --ANRC casein (casein)

Diet II --uncooked 70% extraction flour (U-70)

Diet III --cooked 70% extraction flour (C-70)

Diet IV --uncooked 70% extraction flour and broad beans (U-70-B)

Diet V --cooked 70% extraction flour and broad bean (C-70-B)

Diet VI --uncooked 85% extraction flour (U-85)

Diet VII --cooked 85% extraction flour (C-85)

Diet VIII --uncooked 85% extraction flour and broad bean (U-85-B)

Diet IX --cooked 85% extraction flour and broad bean (C-85-B)

The rations were fed to groups of eight male weanling albino rats of the Charles River strain for four weeks. Weekly cumulative weight gains were plotted (Figure 9). Analysis of variance of the weight gain of rats indicated:

1) The casein diet produced a significantly higher weight gain than any of the other diets.
2) With one exception (U-85 and C-85), cooking did not significantly affect weight gain.

Figure 9. Cumulative weight gain (grams) for rats fed wheat-based diets.

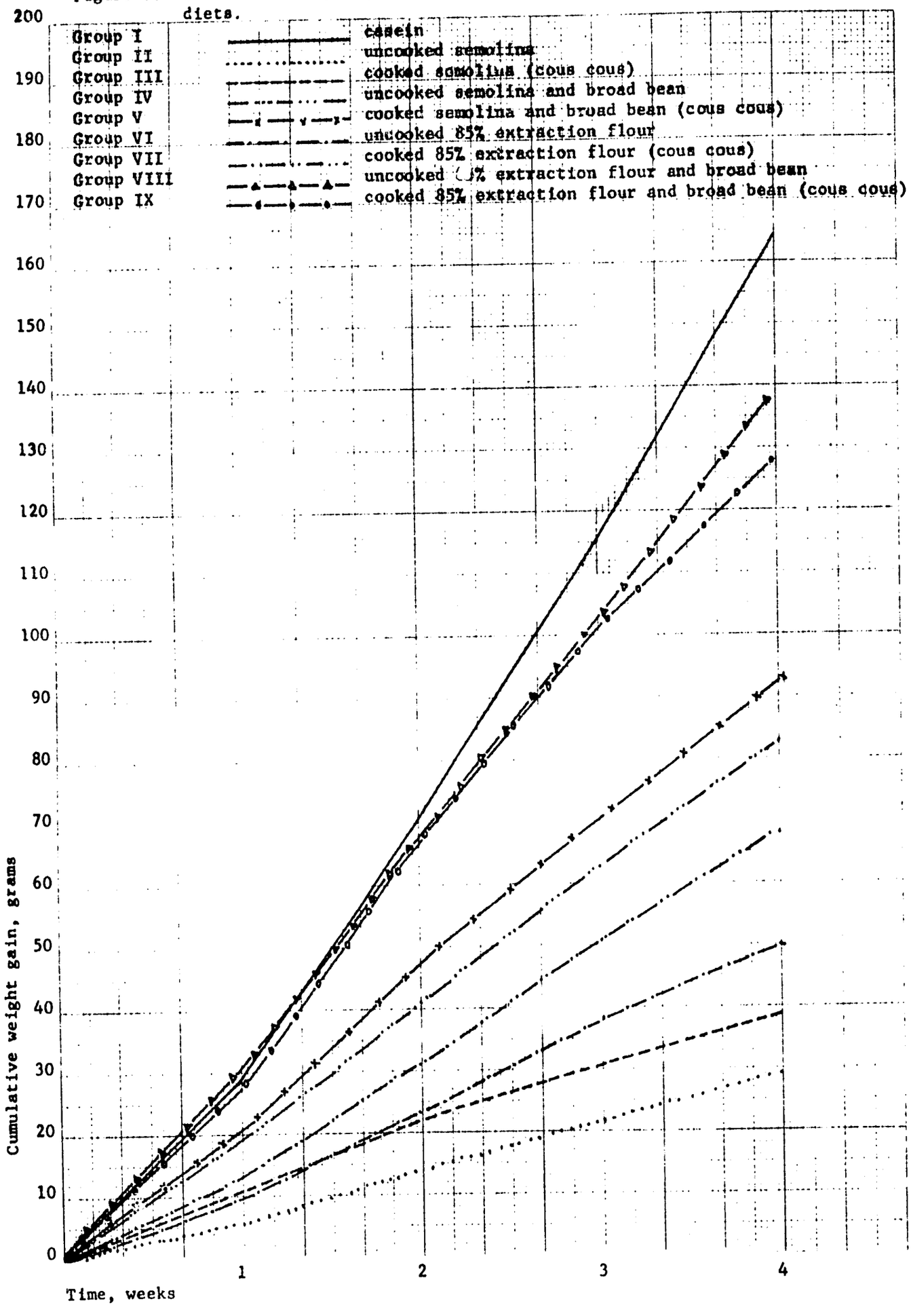

3) Use of broad beans significantly increased weight gains for both the 70% and 85% extraction flours.

4) Eighty-five percent extraction flour diets, uncooked or cooked, produced significantly greater weight gains than the corresponding 70% extraction flour diets with or without broad bean supplementation.

Protein efficiency ratios (PER) were calculated at the end of four weeks (Table 21). Individual, one degree of freedom, comparisons during the analysis of variance are shown in Table 22. The following conclusions regarding PER were drawn:

1) Use of broad beans increased the PER in general.

2) Cooking reduced the effect of broad beans on PER about 50%.

3) Eighty-five percent extraction flour produced higher PER than 70% extraction flour.

4) The use of casein as the source of protein produced the highest PER among the sources studied (Determined by separate t-test).

On the final day of the study all rats were rated subjectively for degree of hair loss and scored according to Table 23. Significant differences were found in amount of hair loss (Table 24). Severity of hair loss varied within groups from no hair loss at all to complete bareness of underside, legs, and thighs. No hair loss was observed in the casein control rats. Another observation regarding the fur was the common occurrence of the "wet look" in Group II (U-70).

Table 21. Protein efficiency ratios (PER) for rats fed wheat-based diets.

Group	Average PER
I	2.979 > Groups VIII, IX, IV, V, VII, VI, III, and II
VIII	2.314 > Groups IV, V, VII, VI, III, and II
IX	2.192 > Groups IV, V, VII, VI, III, and II
IV	1.720 > Groups VI, III, and II
V	1.708 > Groups VI, III, and II
VII	1.566 > Groups III and II
VI	1.454 > Groups III and II
III	1.177 > Group II
II	0.967
$LSD_{.05}$	0.1867

Table 22. Effects of broad beans and cooking on PER.

	Broad beans		No Broad beans	Means
Cooked	1.950	**	1.371	1.660
	n.s.		*	n.s.
Raw	2.017	**	1.211	1.614
Means	1.983	**	1.291	

Table 23. Subjective evaluation of hair loss of rats.

Score	Degree of Hair Loss
0	Underside and legs bare
1	Underside bare and legs partly bare
2	Underside bare
3	Underside partly bare
4	Small amount of hair missing
5	Sleek and all hair present

Table 24. Ratings for condition of fur.

Group	Average Rating
I	5.000 > Groups V, III, and VI
VIII	4.750 > Groups III and VI
IX	4.500 > Groups III and VI
II	4.375 > Groups III and VI
IV	4.000 n.s.
VII	3.500 n.s.
V	3.375 n.s.
III	2.625 n.s.
VI	2.500
$LSD_{.05}$	1.592

In regard to hair loss, dermatology studies were made to determine the presence of ringworm, mites or others and all tests were negative. The hemaglobin observations showed all animals to be within the normal range regardless of dietary feeding.

In January, 1970, another rat feeding study will be conducted in an attempt to determine the cause of hair loss observed in Cous cous Rat Study I and to study various levels of broad bean supplementation to durum wheat. Two levels of protein, 10% and 18%, will be used in diets made from 70% extraction durum wheat flour. These diets will be supplemented by substituting broad bean flour for 0, 5, 10, and 15% of the wheat flour. In addition, lysine will be used as a supplement to the wheat flour.

Moroccan Bread

Supplementation of Moroccan Bread With Chick Pea and Broad Bean Flour

Objectives

The objective of this work is to characterize the effects of chick pea and broad bean flour supplementation on general characteristics, organoleptic and nutritional properties of Moroccan bread.

Moroccan Bread

Moroccan bread varies in shape and size but the most common bread is a domed shaped loaf similar to the Italian bread but with less volume. Individual loaves are 8-9" in diameter and weigh about 400 g. at the commercial bakeries. In many parts of the country, however, the dough is prepared, moulded and divided and then sent daily to the local bakeries to be baked.

Flour for Moroccan bread is made in one of two ways. A straight grade flour using a commercial mill quite similar to the mills in the United States (See AID-F-8). The other milling procedure uses a simple two high roller mill as depicted in flow sheet AID-F-19.

Selection of Ingredients

(a) Base flour: White wheat (Variety Gaines 68) was milled on Multomat mill to 80% extraction using the procedure depicted in AID-F-8 to match the Force Farina which is used commercially in Morocco for bread making and which has 8-10% protein and 0.6-1.0% ash. The flour milled at KSU had 7.65% protein and 0.63% ash (on 14% moisture basis). Optimum absorption as determined by Farinogram was 61.4% and flour granulation was in the range of 130-135 μ.

(b) Supplementation flour: Milling flows have been developed for the chick pea and broad bean flour and are described in other sections of this

report. The proximate analyses of debranned chick pea and broad beans flour is as follows:

	Broad Bean Flour	Chick Pea Flour
Moisture	10.5%	9.7%
Protein	29.8	19.6
Ash	3.0	2.5
Fat	1.6	6.0
Fiber	2.0	1.3

(c) Yeast and salt: Compressed baker's yeast and uniodized salt were used in the formula.

Bread Formula

The following formula was found satisfactory for the production of Moroccan bread.

Ingredients	gm.	% (on flour basis)
Flour	1500	100
Yeast	15	1
Salt	30	2
Water	885 ml.	59

Standard Baking Procedure

Moroccan bread procedure was standardized by employing various mixing, fermentation, proofing methods and times. The bread produced by the following procedure was similar to the Moroccan bread as judged by a visiting group of Moroccans and as it was compared to the color pictures of Moroccan bread taken in Rabat and Fes.

Mixing: 2 1/2 minutes, ARTOFEX mixer.

Absorption used: 59%.

Fermentation: 1 1/2 hours at 86°F and 85-90% RH. The dough was placed in fermentation jars.

Moulding and Scaling: The dough was punched, scaled to 465 g., rounded and sheeted in a dough sheeter to a 9" diameter and 1/4" thickness.

Proof: The moulded doughs were placed on wooden boards over corn meal or wheat bran to prevent sticking and proofed for 40 minutes in the fermentation cabinet, 86°F and 85-90% RH.

Baking: After proofing, the dough was taken out and rested for 5 minutes at room temperature, then cut with a sharp knife along the diameter and baked in a rotary electric oven at 460°F for 20 minutes.

The bread was cooled at room temperature and the following evaluation was determined:

1. Volume
2. Weight
3. Crust color
4. Organoleptic evaluation by a trained taste panel.

Organoleptic Evaluation of Moroccan Bread

A taste panel of four members were selected and trained in the laboratories of the Department of Foods and Nutrition.

Initial orientation of the members was made to the Moroccan bread as well as the raw supplement. At the present time, the taste panel is ready to carry on a descriptive flavor analysis to define the effect of different levels of supplementation on the eating quality of the bread.

Flavor work has barely begun on the Moroccan bread, and the preliminary results given in Table 25 should be regarded as tentative. The bread flour is soft white wheat flour, 80% Extraction. The supplement is broad bean flour. As implied earlier in this report, sample presentation is standardized and efforts are made to develop technical information as well as consumer-type information. Hence, the bread panel examines more than just a controlled bite of each test bread. The aroma examinations of crumb, top crust and bottom crust will give the location of aromatic

MOROCCAN BREAD FLOUR PRODUCTION

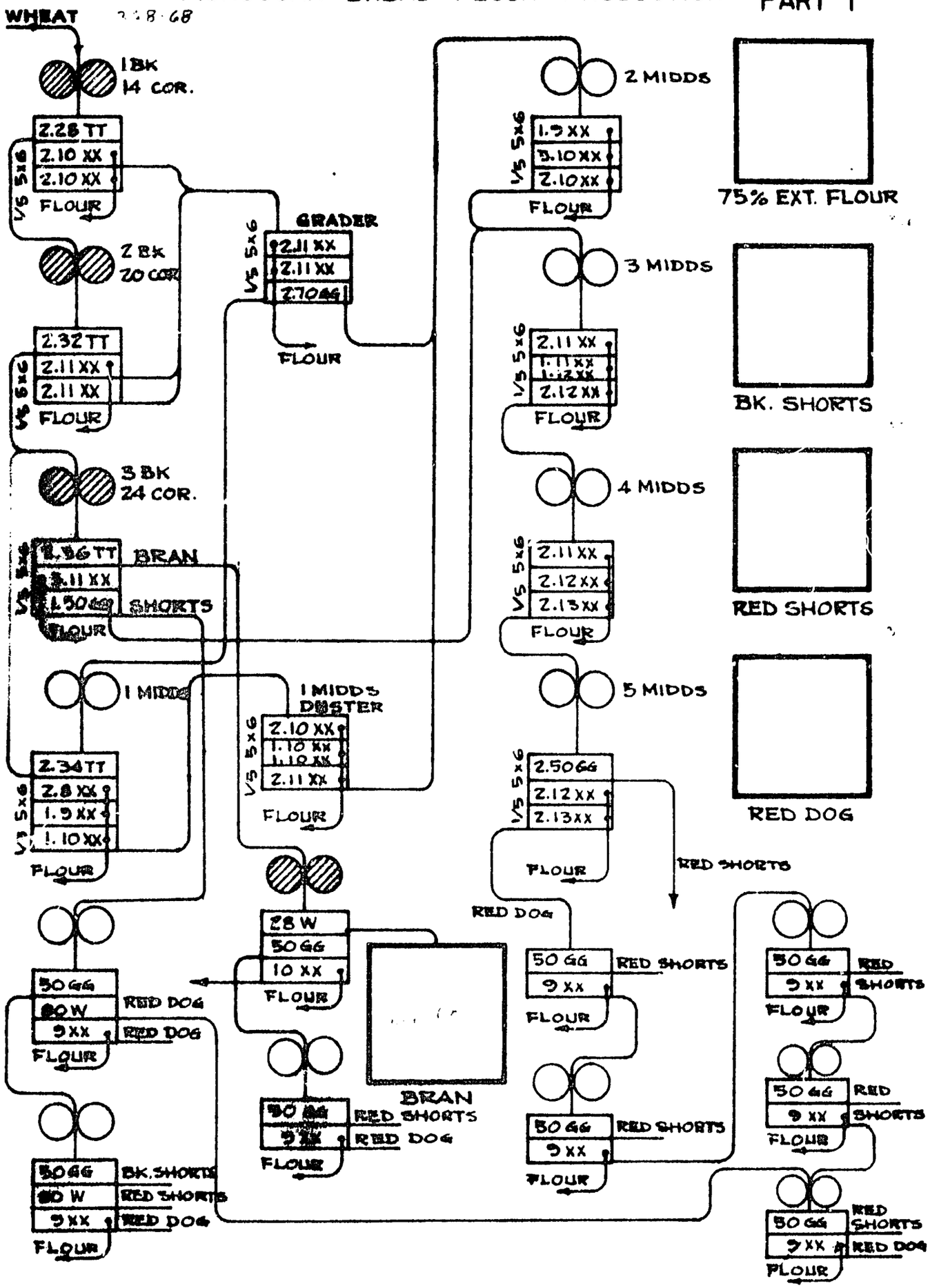

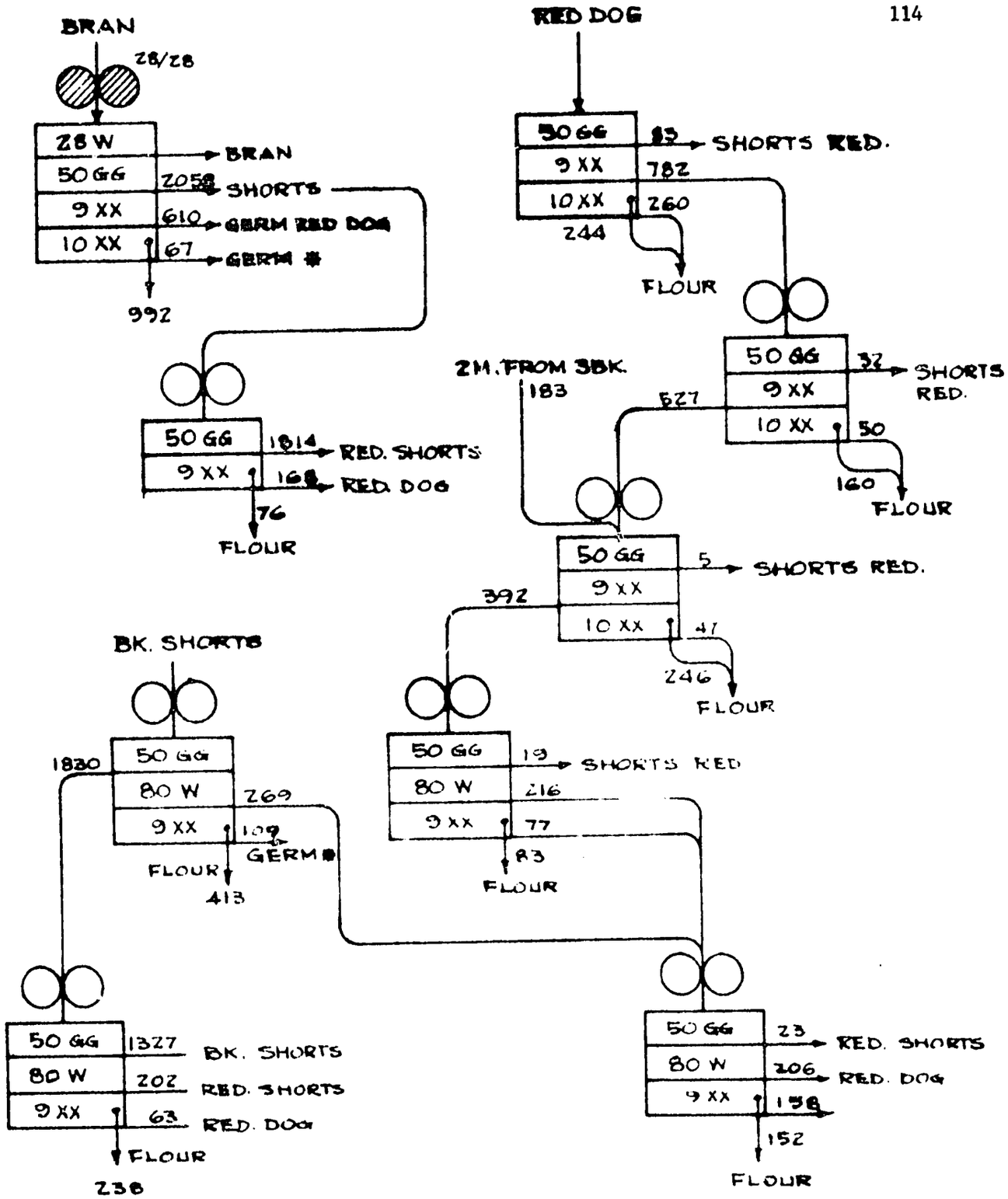

BK. SHORTS	1327
RED. SHORTS	1976
RED. DOG	1260
BRAN	11237

* ROBY 80% EXT

KANSAS STATE UNIVERSITY *Manhattan, Kansas 66502*

CURRICULUMS IN
MILLING TECHNOLOGY
FEED TECHNOLOGY
BAKERY MANAGEMENT

DEPARTMENT OF GRAIN SCIENCE AND INDUSTRY
MILLING INDUSTRIES BUILDING

368 — 68

MOROCCO BREAD FLOUR WHEAT

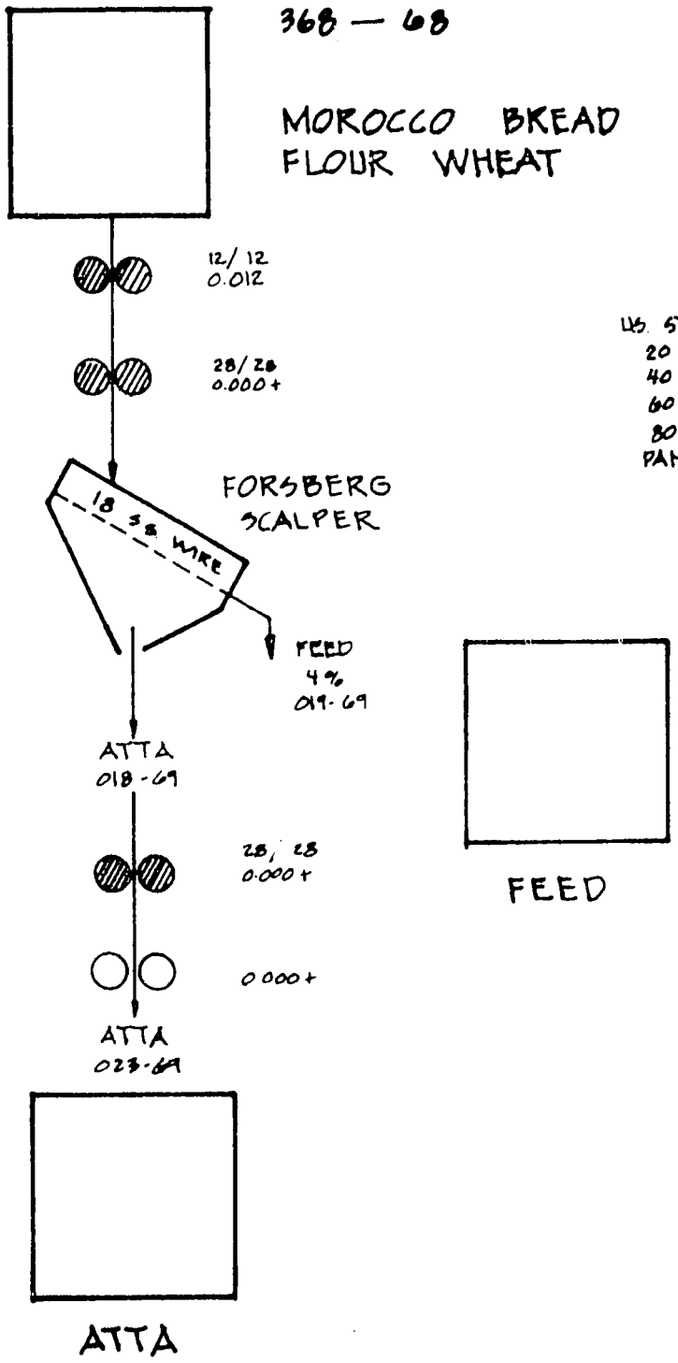

GRANULATION

	06-19-69 018	07-07-69 023
US. STD.	%	%
20	1.9	2.0
40	5.6	8.3
60	19.4	18.7
80	50.9	45.8
PAN	22.2	25.0

"off-" notes. The separate flavor examinations of crumb and both crusts show which may be danger spots or contributors to off-character of the over-all piece. For example, at 10% the over-all flavor possibly is off; this is mainly due to the crumb which was suspect in aroma and off in flavor.

Table 25. Moroccan-Type bread.

	(80% Extraction, Gaines Wheat 1968) % Broad Bean Flour Blends				
AROMAS	0	5	7.5	10	20
Crumb	+	+	?	?	-
Top Crust	+	+	+	+	?
Bottom Crust	+	+	+	+	?
FLAVORS					
Over-all	+	+	?	?	-
Crumb	+	+	+	-	-
Top Crust	+	?	+	?	-
Bottom Crust	+	?	+	+	?

KEY
+ : Similar to control
? : Possibly off
- : Definitely off

Effect of High Protein Supplements on the Physical Properties of Wheat Flour

Physical property evaluations have been carried out to determine the effects of supplements on the properties of wheat flour dough. The following supplements have been studied: peanut flour, fish protein concentrate, soybean flour concentrate, high lysine corn flour, cottonseed flour, chick pea flour and broad bean flour.

The general dough rheology is based upon the use of the farinograph, extensograph, amylograph and sometimes the mixograph.

Peanut Flour:

The peanut flour was blended with a low protein, a medium protein and a high protein wheat flour at the 1, 3, 5 and 8% levels. The general increase in protein content resulting at each increment of blending increased the mixing time by a one to a one and one half minute interval. The absorption values increase as the protein content increases at these lower levels of supplementation. At these low levels of supplementation the loaf volumes of straight dough breads were not adversely affected in medium and high protein wheat flour blends, but demonstrated improvement at the 3, 5, and 8% levels. However, in the low protein wheat flour blend no improvement in loaf volumes was shown.

Chick Pea Flour:

Chick pea flour was blended into wheat flour at 5, 10, 15 and 20% levels. Very little change in absorption and mixing times resulted from blends at 5 and 10% levels. The absorptions increased and mixing times decreased at the 15 and 20% levels of chick pea flour blends. However, all levels of chick pea flour blended with atta made chapatis with acceptable eating qualities and flavor in preliminary taste tests.

Broad Bean Flour:

Broad bean flour was blended in wheat flour at 5, 10, 15 and 20% levels and tested and it was found that the 15 and 20% levels had questionable acceptability from all points of view. An additional test was made with the same result. However, it was decided to retain the 15% level experimentally. The absorption changes rapidly and mixing becomes bucky with increased increments of broad bean flour. The odor becomes very objectionable and the taste not inviting.

Soy Protein Concentrate:

Soy protein concentrates were included in doughs at 5, 10, 15 and 20% level. Inclusion of soy concentrate in the dough at all levels imparted strengthening characteristics of that of a strong flour, the effects increasing with concentrate level. A medium grind soy concentrate was used since it had given good performance in previous tests.

Fish Protein Concentrate:

Fish protein concentrate was blended in the wheat flour at 5, 10, and 15% level. The fish protein concentrate tended to weaken the dough structure, shorten mixing time and give objectionable odor and color. Finished chapatis made from the blended wheat flour and fish protein concentrate were rejected by the acceptability panel above the 5% level of supplementation.

Cottonseed Flour:

Inclusion of cottonseed flour in the dough at 5, 10, and 15% level gave characteristics of that of a damaged flour. The resultant finished chapatis were given a low score by the acceptability panels at the 10 to 15% level. The 5% level seemed to enhance the quality of the chapatis, but the digestibility factor and flatulence was questioned.

High Lysine Corn:

Two protein levels of wheat flour 10.2 and 13.2% were used as carriers. The percentage range of the corn-flour in the blends was 5, 10, 15 and 20%. Acceptable straight dough process bread was baked, but as the percentage of corn-flour increased in the formula, the tighter and firmer the crumb became. A 10% supplementation level seemed to be the highest possible for good quality white pan bread. The farinograph characteristics of each (13.2 protein) and (10.2 protein) group follow the same stability sequence and show patterns of a blended flour instead of one true variety. Above the 5% level there was a shortening of peak time with the high protein flour. The hydration time is not affected by the corn flour in either group.

Effects of Nonwheat Protein Supplements on the Baking Properties of Wheat Flour

There is much interest around the world in extending wheat flour with nonwheat starches and proteins. In wartime, wheat flour has been traditionally extended by increased extraction rates or adding of other cereal flours. Currently, several governments rigidly control extraction rates and establish the amount of indigenous flours which must be added to wheat flour. For example, in Pakistan, the amount of grain sorghum which must be blended with wheat for commercial milling is controlled by regulation. Sometimes the blend contains as much as 10% sorghum. Similarly in Paraguay and Brazil, cassava flour must be added to wheat flour.

From the nutritional standpoint, research is underway in all parts of the world on the addition of proteins to wheat flour from all practical and many impractical protein sources. It is axiomatic that the addition of nonfunctional nutrient additives to breadstuff formulations will change the organoleptic properties of the product such as flavor, color, texture, appearance, aroma, and volume.

Other sections of this report have dealt with the effect of different levels of protein resource materials on the functional, nutritional and organoleptic properties of chapatis, cous cous and Moroccan bread. A great deal of information can be learned that is applicable to all wheat-based foods by studying the effect of adding high protein materials to wheat flour used for making white pan bread.

Brief summaries of related work with white pan bread being carried at KSU are given in the following sections. Only the work with high lysine corn flour is supported directly by this contract.

Some Effects of Soy - Protein Concentrate On Dough and Bread Characteristics

This investigation was undertaken to increase the scope of information on the use of a commercial 70% soy-protein concentrate in cereal base food. The effects of three grinds (fine, medium, and coarse) of soy concentrate on physical dough properties were studied with the farinograph and extensograph; bread baking potentialities were surveyed by a straight dough method, no-time dough method, and extended to include the continuous dough method.

Inclusion of soy concentrate in farinograph doughs at levels of 7.5 and 15.0% imparted to the control curve the characteristics of the curve of a strong flour, the effects increasing with concentrate level. The medium or coarse grind soy concentrate gave more of the strengthening effects than the fine grind.

Dough containing soy concentrate were less extensible and more resistant to extension than those of the control. These effects generally increasing with soy concentrate level and with increasing particle size.

In baking studies, loaf specific volumes of loaves of all the soy concentrate in wheat flour blends made by straight, no-time, and continuous-dough methods were lower than for the basic wheat flour formulae, the difference being greater at the higher level of addition. However, the same soy concentrate-wheat flour blends produced loaves with varied quality when made by different methods. Bread made by continuous-dough method was least affected by adding soy concentrate.

Crumb softness or compressibility of bread containing the 15% level of soy concentrates made by the continuous-dough method was softer than those containing 7.5% level as the control wheat flour. For bread made by

the straight and no-time dough methods only that with 7.5% level of coarse soy concentrate had crumb softness equal to that of the control.

Effect of High Lysine Corn Flour on Dough and Bread Characteristics

The development of high lysine corn has led to strong interest, particularly in South America, in whether flour from high lysine corn could be used as a partial replacement for wheat flour in wheat breads. High lysine corn flours from several genetic backgrounds were available from milling studies conducted at Kansas State by E. P. Farrell. In research reported by Robinson, Farrell, Deyoe, and Hoover, corn flours were added in 5% increments up to 20% of both a medium and high protein level hard red winter wheat flours. The effect of these corn flour additions on physical dough properties, chemical composition of the blends, and baking properties were evaluated. Specifically, corn flours from three high lysine corn samples and normal corn were used.

Nutritionally, none of the corn flours appreciably changed the lysine content of corn-wheat flour blend even when added at the 20% level. High protein fractions from air classified corn flour did effectively improve the lysine content of wheat flour blends.

The physical dough properties of blends of wheat flour with all the corn flours were quite similar with high lysine corn flours being, perhaps, slightly better than the regular corn flour. In baking tests, it appears that highly acceptable bread could be made using up to 10% of any of the corn flours, while using more than this level, the quality was lowered. Higher protein wheat flour can definitely "carry" more of the nonwheat flour than the medium protein wheat flour.

Effect of Sucrose Esters on the Quality of Bread From Wheat Flour Supplemented With Nonwheat Proteins

Pomeranz along with several of his students at Kansas State University have carried out an elucidating series of studies into the role of lipids in bread quality. These studies brought into focus the importance of a glycolipid component of wheat flour. Adding commercially available sucrose esters which are chemically similar to the natural wheat glycolipids had no beneficial effect on the functional properties of gluten present in wheat flour. Pomeranz, Shogren and Finney did discover the rather amazing fact that the addition of sucrose esters counteracted the deleterious effect of up to 16 percent soy flour, concentrate or isolate on loaf volume, crumb grain and softness. The sucrose esters did indeed render the soy proteins functional in bread-making.

This finding was quickly followed with a series of bakes made with 8 parts (per hundred parts wheat flour) of defatted cottonseed flour, fish protein concentrate, defatted wheat germ, air-fractionated protein-rich wheat flour, food grade Torula yeast, nonfat milk solids, expeller-extracted sesame seed flour, or wheat gluten. All the protein-rich additives substantially lowered loaf volume and impaired crumb grain. Loaf volumes were increased and crumb grain was improved by adding 1 to 6 parts sucrose tallowate.

Robinson, Phillips and Kirleis have recently studied the effect of adding the sucrose esters to soy containing breads made by the continuous mix method. Without the sucrose esters, the quality of bread as measured by specific loaf volume with 7.5 and 15% soy protein concentrate was poorer than the all wheat flour control. With the addition of 3% sucrose ester, the quality of the 15% soy protein concentrate bread was equal to the control and the 7.5% soy bread was superior to the wheat flour control.

Unfortunately, sucrose esters are now commercially available only from the Dai Nippon Sugar Manufacturing Company, Ltd., Tokyo, Japan. To date, there has been no request made to the United States Food and Drug Administration to permit their use in breadstuffs. These two facts are currently deterrents to practical application of this research.

AID-F-27

KSU KANSAS STATE UNIVERSITY *Manhattan, Kansas 66502*

CURRICULUMS IN
MILLING TECHNOLOGY
FEED TECHNOLOGY
BAKERY MANAGEMENT

DEPARTMENT OF GRAIN SCIENCE AND INDUSTRY
MILLING INDUSTRIES BUILDING

SAMPLES FROM INDIA

OBTAINED BY J. PEDERSEN AUGUST 28, 1969

SENT BY K. HARRIS USAID NEW DELHI

WHEAT
TRITICUM VULGARE

032-69

PADDY (RICE)
ORYZA SATIVA

033-69

SORGHUM
SORGHUM VULGARE

034-69

BENGAL GRAM
CICER ARIETINUM

035-69

HORSE GRAM

036-69

BLACK GRAM
PHASEOLOUS RADIATUS

037-69

GREEN GRAM
PHASEOLUS AUREUS

038-69

COW PEA
VIGNA CATJANG

039-69

FIELD BEAN
DOLICHOS LABLAB

040-69

Bibliography

1. Kakade and Liener Method. Anal. Biochem., 27:272-280 (1969).

2. Carpenter's Method. J. Biochem., 77:604 (1960).

3. Hirwe, R. N. & Magar, N. G. Effect of autoclaving on the nutritive value of Bengal grams, dal arlsar, and lentil. Current Sci. 20-40 (1951).

4. Idem. Effect of autoclaving on the nutritive value of pulses. Ind. J. Med. Res. 41, 191 (1953).

5. Adolph, W. H., Shammas, E. I. and Holaby, S. H. The nutritive value of legume proteins in Near East diets. Food Res. 20, 31 (1955).

6. Esh, G. C. and Sorn, J. M. Nutritive survey on available food material. III Nutritive value of pulses. Ind. J. Physiol. & Allied Sci. 6, 61 (1952).

7. Esh, G. C. Pulses as food proteins. J. Proc. Inst. Chemists (India) 30, 21 (1952).

8. Acharya, B. N., Niyogi, S. P. & Patwardhan, U. N. Balanced diets, III The effect of processing on the biological value of some cereals and pulses. Ind. J. Med. Res. 30, 73 (1942).

9. Blaizot, J. Effects of heat treatment upon the food value of some legumes. Bull. Soc. Scient. Hyg. aliment 35, 23 (1947).

10. Jimenez, Diaz, C. & Vivano, F. Cicerisan. Rev. Chm. Espan. 33, 398 (1949).

11. Mathur, K. S., Sharma, R. D. & Ram, N. Chromatographic amino acid patterns of various protein fractions of Bengal gram. Ind. J. Med. Res. 56, 6 (1968).

12. Osborne, T. B. The vegetable protein. 1st ed. 13-21 Longmans, Green & Co., London (1919).

13. Liener, I. E. (1961) toxic factors in edible legumes and their elimination. Am. J. Chm. 11, 281 (1962).

14. Altschul, A. M. Processed plant protein foodstuff academic press: N.Y. (1958).

15. Burnett, R. S. & Fontaine, T. D. Peptization on N-constituents of solvent extracted peanut meal. Ind. Eng. Chem. 36, 164 (1944).

16. Niyogi, S. P., Narayana, N., and Desai, B. G. Ind. Jour. Med. Res. 19, p. 475, 859 and 1041 (1932).

17. Niyogi, S. P., Narayana, N., and Desai, B. G. Ind. Jour. Med. Res. 22, p. 373 (1934).

18. Basu, K. P., Nath, M. C., and Ghani, M. O. Ind. Jour. Med. Res. 23, p. 789 (1936).

19. Basu, K. P., and Basak, M. N. Ind. Jour. Med. Res. 24, p. 1043, (1937).

20. Basu, K. P., Nath, M. C., and Ghani, M. O. Ind. Jour. Med. Res. 23, p. 811 (1936a).

21.-22. Swaminathan, M. Ind. Jour. Med. Res. 24, p. 767 (1937).
_____ (1937a) Ibid, 25, p. 57
_____ (1937b) Ibid, 25, p. 399
_____ (1938) Ibid, 26, p. 107
_____ (1938a) Ibid, 26, p. 113

23. Mitra, K., and Verma, S. K. The biological value of proteins of rice, pulses and milk fed in different proportions to human beings. Ind. J. Med. Res 36, 261-270 (1947).

24. Chattopadhyay and Banerjee, S. Effect of germination on the biological value of proteins and trypsin inhibitor activity of some common Indian pulses. Ind. J. Med. Res. 41:185-189 (1953).

25. Hirwe, R. H. & Magar, N. G. Effect of autoclaving on nutritive value of pulses. Ind. J. Med. Res. 41:191-200 (1953).

26. Tandon et al. (1957).

27. Lautz, E. M., Gough, H. W., & Campell, D. M. Effect of variety, location and years on the proteins and amino acid content of dried bean. J. Agr. Food Chem. 6(1):58-60 (1958).

28. FAO Report No. 19. Legumes in human diet. Rome.

29. Horwitz. (1967).

30. Evans, R. J. & Butts, H. A. A study on the heat inactivation of lysine in soybean oil meal. J. Biol. Chem. 175:15-20 (1948).

31. Speckman, D. H., Stein, W. H. & Moore, S. Automatic recording apparatus for use in the chromotography of amino acids. Anal. Chem. 30:1190-1195 (1958).

32. Larkin, R. A., MacMasters, M. M., Cull, I. M., Wolf, M. J. & Rist, C. E. Preparing serial sections of mature corn and wheat kernel. Stain Technology 27(2)107-112 (1952).

33. Reeve, et al. Stain Manuel (1969).

34. Jimenez, G. R. Protein fractionation studies on high lysine corn. Proceedings of High Lysine Corn Conference, Corn Refineries Assn., Inc., Washington, D. C. (1966).

TECHNICAL PAPERS RESULTING FROM PROJECT

Chaudhry, M. S., MacMasters, M. M., Farrell, E. P., and Hoover, W. J., Experimental Production of Atta; In preparation.

Chaudhry, M. S., MacMasters, M. M., and Hoover, W. J., Nutritional Value of Chapatis With and Without Added Lysine; In preparation.

Chung, H. Y., MacMasters, M. M., and Hoover, W. J., A Note on the Relative Importance of Vitamins and Minerals as Dietary Supplements; In preparation.

Kirleis, A. W. and Robinson, R. J. Effects of Soy Protein Concentrate on Dough and Bread Characteristics; In preparation.

Pomeranz, Y., Shogren, M. D., and Finney, K. F. Improving Breadmaking Properties with Glycolipids. I. Improving Soy Products with Sucroesters. Cereal Chem. Vol. 46, No. 5, Sept. 1969, pp. 503-511.

Pomeranz, Y., Shogren, M. D., and Finney, K. F. Improving Breadmaking Properties with Glycolipids. II. Improving Various Protein-Enriched Products. Cereal Chem. Vol. 46, No. 5, Sept. 1969, pp. 511-518.

Robinson, R. J., Phillips, D. E., and Kirleis, A. W. Effect of Sucroesters and Soy Protein Concentrate in Continuous Process Bread; In preparation.

Robinson, R. J., Farrell, E. P., Deyoe, C. W., and Hoover, W. J. Observations on the Use of Corn Flour as an Extender in White Bread Production; In preparation.

Tsen, Cho C., Hoover, W. J., and Phillips, D. E. Improved Breads Containing Nonwheat Protein; In preparation.

Farrell, E. P. Corn Milling at Kansas State University. A Progress Report presented to the Technical Research Committee, American Corn Millers Federation, 1969.

Personnel Contributing to Project

Project Leader:

Dr. William J. Hoover, Director, Food and Feed Grain Institute and Head, Department of Grain Science and Industry

Faculty:

Department of Biochemistry
Dr. Donald B. Parrish, Professor

Department of Foods and Nutrition
Dr. Jean Caul, Distinguished Professor
Dr. Beth Fryer, Professor

Department of Grain Science and Industry
Dr. Athia Bano, Post Doctoral Fellow
Dr. Charles Deyoe, Professor
Mr. Eugene F. Farrell, Professor
Dr. John A. Johnson, Professor
Dr. Majel M. MacMasters, Professor
Mr. G. D. Miller, Assistant Professor
Mr. Dale Phillips, Instructor
Dr. Robert J. Robinson, Assistant Professor
Mr. Arlin B. Ward, Professor

Graduate Students:

Department of Biochemistry
Miss Janet Seymour
Miss Nipa Somnapan

Department of Foods and Nutrition
Miss Janet Archer

Department of Grain Science and Industry
Mr. Mohammed Alsuaidy
Mr. Hsin Chung
Mr. Vardon Gainor
Mr. Allan Kirleis
Mr. Leh-Yeu Ling
Mr. Mir Shamsuddin
Miss Amy Swatditat
Mr. Robert Tang

Staff:

Department of Foods and Nutrition
Mrs. Sharon Vesecky

Department of Grain Science and Industry
Mrs. Donna Medlin
Mrs. Roopa Shah
Mrs. Martha Wang
Miss Kusum Patel
Mrs. Carolyn Geng

APPENDIX A

SUMMARY OF PROTEIN AND AMINO ACID

COMPOSITION OF RAW MATERIALS

EVALUATED IN PROJECT

PERCENT OF SAMPLE

PROTEIN CONTENT REFERRED TO AS
% N x 6.25 IN ALL CASES

	BARLEY % SAMPLE		
	36-68 Wheat & Barley	144-68 Barley	94-68 Barley
Protein	12.1	10.8	9.4
Moisture	11.4	11.0	11.3
Lysine	0.302	0.354	0.322
Histidine	0.231	0.219	0.185
Ammonia	0.323	0.304	0.226
Arginine	0.484	0.516	0.441
Aspartic Acid	0.578	0.696	0.540
Threonine	0.348	0.383	0.324
Serine	0.516	0.493	0.398
Glutamic Acid	3.501	3.043	2.293
Proline	1.227	1.215	0.968
Glycine	0.411	0.455	0.363
Alanine	0.411	0.457	0.368
½ Cystine	0.307	0.326	0.242
Valine	0.492	0.537	0.457
Methionine	0.136	0.036	0.068
Isoleucine	0.394	0.402	0.321
Leucine	0.750	0.762	0.638
Tyrosine	0.355	0.369	0.292
Phenylalanine	0.595	0.570	0.482
Recovery	83.95	93.10	85.75
Oxidations			
Cystine	0.146	0.219	0.200
Methionine	0.182	0.139	0.156

BEANS % SAMPLE

	83-68 Good Horse Beans	331-68 Northern Beans	335-68 Large Kidney Beans	344-68 Feveroles	347-68 Horse Beans	182-68 Red Kidney Beans	73-68 Harico Beans	75-68 Moroccan Beans	85-68 Poor Horse Beans	322-68 319 Feveroles
Protein	26.3	23.3	22.9	25.8	27.3	21.4	20.8	22.7	22.0	24.9
Moisture	10.1	13.4	11.5	10.3	9.8	10.3	10.6	10.6	10.7	10.9
Lysine	1.308	1.705	1.599	1.555	1.613	1.575	1.419	1.628	1.441	1.580
Histidine	0.501	0.723	0.677	0.613	0.612	0.653	0.567	0.721	0.527	0.631
Ammonia	0.360	0.454	0.432	0.452	0.474	0.414	0.322	0.517	0.448	0.459
Arginine	2.206	1.673	1.491	2.674	2.354	1.592	1.119	1.619	1.979	2.402
Aspartic Acid	2.319	2.823	2.898	2.789	2.760	2.852	2.555	2.783	2.355	2.883
Threonine	0.779	1.032	0.991	0.848	0.952	0.932	0.924	0.915	0.815	0.886
Serine	0.983	1.452	1.377	1.207	1.175	1.374	1.236	1.183	1.031	1.172
Glutamic Acid	3.649	3.694	4.075	3.965	4.452	4.059	3.465	4.375	3.758	4.314
Proline	0.789	1.215	0.850	1.007	0.874	0.914	0.894	1.016	0.891	1.013
Glycine	0.882	0.950	0.896	1.022	1.005	0.917	0.819	0.984	0.922	1.044
Alanine	0.887	1.016	0.933	0.977	1.018	0.980	0.876	1.003	0.901	1.008
½ Cystine	0.000	0.255	0.000	0.349	0.000	0.210	0.211	0.000	0.268	0.257
Valine	0.993	1.192	1.316	1.119	1.197	0.971	1.031	1.096	0.965	1.143
Methionine	0.062	0.210	0.213	0.115	0.063	0.210	0.174	0.331	0.093	0.075
Isoleucine	2.008	1.077	1.084	0.964	1.040	1.075	0.943	0.941	0.882	1.018
Leucine	1.332	1.869	1.659	1.745	1.585	1.884	1.634	1.704	1.432	1.628
Tyrosine	0.633	0.757	0.742	0.784	0.799	0.797	0.700	0.730	0.697	0.792
Phenylalanine	0.791	1.295	1.309	1.035	1.047	1.335	1.305	1.306	0.928	1.044
Recovery	76.08	94.99	92.03	89.52	83.26	98.84	87.50	96.48	90.99	91.97
Oxidation										
Cystine	.2665	0.243	0.213	.313	.2743	0.194	.288	.251	.284	0.294
Methionine	.0813	0.265	0.255	.199	.4569	0.170	.193	.324	.178	0.165

BEANS (2) % SAMPLE

	321-68 III Feies	79-68 Horse Beans	176-68 Bean	154-68 Pulse
Protein	24.1	26.4	24.1	22.2
Moisture	10.7	11.0	8.6	8.0
Lysine	1.732	1.676	1.644	1.512
Histidine	0.650	0.6161	0.729	.601
Ammonia	0.488	0.433	0.477	.440
Arginine	2.640	2.440	1.662	1.643
Aspartic Acid	2.887	2.901	2.723	2.747
Threonine	0.929	0.949	0.874	.725
Serine	1.201	1.243	1.201	1.132
Glutamic Acid	4.492	4.607	4.175	3.883
Proline	1.016	1.014	1.064	1.009
Glycine	1.067	1.046	0.987	.858
Alanine	1.052	1.062	0.967	.943
½ Cystine	0.365	0.000	0.188	.000
Valine	0.690	1.232	1.142	1.106
Methionine	0.122	0.113	0.261	.241
Isoleucine	1.074	1.060	0.998	.928
Leucine	1.662	1.687	1.836	1.751
Tyrosine	0.832	0.798	0.786	.671
Phenylalanine	1.090	1.039	1.331	1.244
Recovery	98.80	88.41	90.74	91.95
Oxidations				
Cystine	0.272	.296	.272	.184
Methionine	0.148	.207	.316	.319

CHICK PEAS % SAMPLE

	80-68 Chick Peas	82-68 Chick Peas	343-68 Chick Peas	326-68 Pois Chicke
Protein	21.1	19.1	18.6	22.6
Moisture	9.90	10.0	11.0	10.1
Lysine	1.442	1.374	1.374	1.234
Histidine	0.535	0.502	0.497	0.457
Ammonia	0.380	0.308	0.332	0.351
Arginine	2.182	1.686	1.749	1.736
Aspartic Acid	2.689	2.359	2.397	2.321
Threonine	0.796	0.741	0.767	0.661
Serine	1.240	1.054	1.019	0.993
Glutamic Acid	3.883	3.388	3.617	3.344
Proline	0.758	0.785	0.696	0.749
Glycine	0.878	0.799	0.793	0.735
Alanine	0.923	0.867	0.832	0.811
½ Cystine	0.329	0.355	0.160	0.042
Valine	1.054	0.935	0.917	0.845
Methionine	0.186	0.184	0.230	0.166
Isoleucine	0.848	0.848	0.843	0.689
Leucine	1.451	1.496	1.302	1.344
Tyrosine	0.641	0.597	0.600	0.527
Phenylalanine	1.255	1.179	1.156	1.138
Recovery	98.08	95.52	98.55	77.67
Oxidations:				
Cystine	.2710	.2648	.338	.345
Methionine	.1978	.1899	.313	.327

CHICK PEAS % SAMPLE
continued

	391-68 Chick Peas	392-68 Chick Peas	166-68 Chick Peas	174-68 Black Chick Peas
Protein	18.2	19.8	20.9	18.6
Moisture	8.8	9.0	9.0	7.3
Lysine	1.416	1.448	1.322	1.312
Histidine	0.524	0.523	.468	0.465
Ammonia	0.322	0.339	.301	0.302
Arginine	1.807	2.023	1.842	1.664
Aspartic Acid	2.283	2.405	2.353	2.237
Threonine	0.728	0.730	.741	0.698
Serine	1.020	1.039	1.001	0.967
Glutamic Acid	3.219	3.387	3.398	3.202
Proline	0.804	0.818	.853	0.807
Glycine	0.797	0.827	.784	0.757
Alanine	0.823	0.857	.835	0.783
½ Cystine	0.478	0.434	.489	0.340
Valine	0.836	0.864	.400	0.824
Methionine	0.165	0.203	.213	0.200
Isoleucine	0.811	0.843	.840	0.810
Leucine	1.474	1.514	1.499	1.475
Tyrosine	0.564	0.568	.555	0.520
Phenylalanine	1.062	1.113	1.076	1.073
Recovery	100.39	97.03	85.88	93.64
Oxidations:				
Cystine	.342	.373	.360	.319
Methionine	.296	.291	.394	.267

CORN % SAMPLE

	77-68 White Corn from Fez	334-68 American Corn	129-68 Domestic Corn	315-68 D117 Hybrid Double	74-68 American Corn
Protein	10.4	11.4	9.3	10.1	16.1
Moisture	11.3	13.6	11.5	11.4	11.0
Lysine	0.231	0.259	0.283	0.267	0.298
Histidine	0.227	0.343	0.269	0.280	0.294
Ammonia	0.255	0.307	0.186	0.233	0.234
Arginine	0.433	0.428	0.424	0.443	0.442
Aspartic Acid	0.761	0.775	0.632	0.764	0.832
Threonine	0.365	0.424	0.351	0.367	0.444
Serine	0.472	0.592	0.454	0.528	0.594
Glutamic Acid	2.393	2.712	1.901	2.213	2.569
Proline	1.193	1.277	0.839	1.081	1.156
Glycine	0.341	0.384	0.344	0.362	0.401
Alanine	0.994	0.957	0.685	0.816	0.942
½ Cystine	0.110	0.351	0.171	0.213	0.126
Valine	0.588	0.577	0.468	0.461	0.603
Methionine	0.239	0.204	0.019	0.040	0.153
Isoleucine	0.456	0.443	0.334	0.324	0.439
Leucine	1.387	1.630	1.017	1.399	1.427
Tyrosine	0.468	0.524	0.371	0.412	0.485
Phenylalanine	0.568	0.641	0.427	0.537	0.563
Recovery	96.98	98.84	88.66	94.39	65.08
Oxidations:					
Cystine	.1896	0.251	0.208	0.210	.250
Methionine	.1429	0.227	0.171	0.176	.272

CORN % SAMPLE
continued

	185-68 Milled Corn	184-68 Corn Germ	180-68 Corn	130-68 Domestic Corn	183-68 Defatted Corn Germ
Protein	30.8	11.7	8.6	10.1	19.1
Moisture	8.0	8.0	8.5	7.6	5.3
Lysine	0.614	.540	.272	.300	.816
Histidine	0.695	.354	.257	.283	.569
Ammonia	0.749	.215	.199	.253	.381
Arginine	1.238	.696	.407	.477	1.132
Aspartic Acid	1.816	.840	.528	.617	1.333
Threonine	1.031	.486	.309	.356	.758
Serine	1.425	.601	.403	.493	.890
Glutamic Acid	6.276	1.775	1.591	2.232	2.901
Proline	2.793	.730	.891	.950	1.153
Glycine	0.985	.563	.335	.392	.530
Alanine	2.492	.711	.608	.684	1.149
½ Cystine	0.391	.093	.093	.276	.029
Valine	1.418	.643	.411	.488	1.077
Methionine	0.525	.165	.184	.149	.272
Isoleucine	1.112	.406	.276	.352	.637
Leucine	4.283	1.036	1.014	1.168	1.575
Tyrosine	1.182	.346	.339	.391	.607
Phenylalanine	1.555	.505	.379	.486	.803
Recovery	88.79	86.61	90.62	92.76	85.51
Oxidations:					
Cystine	.525	.222	.196	.225	.345
Methionine	.555	.221	.179	.203	.345

CORN (2) % SAMPLE

	314-68 Corn
Protein	9.4
Moisture	11.2
Lysine	.257
Histidine	.221
Ammonia	.224
Arginine	.391
Aspartic Acid	.605
Threonine	.341
Serine	.463
Glutamic Acid	1.815
Proline	.710
Glycine	.353
Alanine	.709
½ Cystine	.245
Valine	.405
Methionine	.145
Isoleucine	.310
Leucine	1.121
Tyrosine	.428
Phenylalanine	.475
Recovery	87.94
Oxidation	
Cystine	.225
Methionine	.207

FISH % SAMPLE

	108-68 Fish Product	187-68 Fish Flour
Protein	90.00	85.4
Moisture	8.00	10.0
Lysine	9.324	7.982
Histidine	2.333	2.433
Ammonia	1.768	1.207
Arginine	6.079	5.838
Aspartic Acid	9.962	8.122
Threonine	4.822	3.814
Serine	4.006	3.520
Glutamic Acid	16.081	13.645
Proline	3.359	3.645
Glycine	4.137	5.346
Alanine	5.750	5.662
½ Cystine	.424	0.945
Valine	5.111	4.497
Methionine	2.916	2.552
Isoleucine	4.817	3.808
Leucine	8.105	7.167
Tyrosine	3.328	2.901
Phenylalanine	3.919	3.633
Recovery	100.47	96.02
Oxidation		
Cystine	.992	.803
Methionine	2.832	2.400

GRASS SEED % SAMPLE

	341-68 Canary Seed
Protein	16.6
Moisture	12.7
Lysine	0.535
Histidine	0.318
Ammonia	0.479
Arginine	1.134
Aspartic Acid	1.257
Threonine	0.486
Serine	0.700
Glutamic Acid	3.840
Proline	0.841
Glycine	0.625
Alanine	0.740
' Cystine	0.457
Valine	0.778
Methionine	0.220
Isoleucine	0.636
Leucine	1.089
Tyrosine	0.504
Phenylalanine	0.849
Recovery	89.06
Oxidations	
Cystine	0.355
Methionine	0.272

LENTILS % SAMPLE

	78-68 Lentille	81-68 Moroccan	346-68 Lentils	324-68 Leutelles No. 53	167-68 Lintels
Protein	24.1	23.0	17.0	25.8	24.0
Moisture	10.6	10.7	11.7	10.7	8.0
Lysine	2.019	1.776	1.246	1.812	1.908
Histidine	0.661	0.613	0.651	0.648	0.621
Ammonia	0.428	0.417	0.317	0.468	0.448
Arginine	2.045	1.846	1.537	2.192	2.103
Aspartic Acid	2.904	2.551	2.291	3.242	3.047
Threonine	0.920	0.851	0.740	0.974	0.926
Serine	1.206	1.148	0.970	1.302	1.339
Glutamic Acid	4.063	3.924	3.487	4.550	4.289
Proline	1.416	0.827	1.337	1.089	1.101
Glycine	0.964	0.902	0.775	1.053	1.063
Alanine	1.018	0.924	0.796	1.105	1.113
½ Cystine	0.026	0.000	0.000	0.000	0.254
Valine	1.266	1.114	1.016	1.182	1.237
Methionine	0.098	0.179	0.274	0.099	0.167
Isoleucine	1.047	0.922	0.780	0.904	1.097
Leucine	1.612	1.405	1.364	1.844	2.023
Tyrosine	0.797	0.644	0.574	0.786	0.808
Phenylalanine	1.171	1.075	1.040	1.285	1.311
Nitrogen Recovery	94.78	89.42	106.60	91.83	98.60
Oxidations:					
Cystine	.1778	.2054	.1887	0.150	.257
Methionine	.0766	.0684	.0943	0.093	.202

	MILLET % SAMPLE		
	337-68 White Millet	72A-68 Millet	172-68 Millet
Protein	10.6	10.1	10.1
Moisture	12.2	10.9	9.7
Lysine	0.189	0.186	.267
Histidine	0.217	0.204	.177
Ammonia	0.319	0.242	.211
Arginine	0.357	0.402	.375
Aspartic Acid	0.692	0.677	.649
Threonine	0.340	0.328	.311
Serine	0.733	0.615	.373
Glutamic Acid	2.359	2.279	1.514
Proline	0.679	0.774	.486
Glycin			
Glycine	0.252	0.262	.290
Alanine	1.173	1.003	.608
½ Cystine	0.182	0.085	.164
Valine	0.242	0.532	.442
Methionine	0.160	0.256	.171
Isoleucine	0.422	0.402	.328
Leucine	1.311	1.047	.778
Tyrosine	0.423	0.345	.256
Phenylalanine	0.613	0.515	.371
Recovery	91.10	89.48	71.06
Oxidations			
Cystine	0.157	.190	.204
Methionine	0.510	.308	.226

MUNG % SAMPLE

	149-68 Mung	345-68 Munqbean	131A-68 Mung
Protein	23.4	21.9	22.9
Moisture	11.7	11.9	11.1
Lysine	1.696	1.653	1.757
Histidine	0.651	0.612	0.660
Ammonia	0.419	0.376	0.366
Arginine	1.629	1.550	1.656
Aspartic Acid	3.026	2.731	3.080
Threonine	0.851	0.804	0.833
Serine	1.333	1.238	1.281
Glutamic Acid	4.665	4.196	4.598
Proline	1.136	1.037	1.297
Glycine	0.986	0.901	0.913
Alanine	1.130	0.993	1.001
½ Cystine	0.107	0.200	0.000
Valine	1.321	0.405	1.339
Methionine	0.266	0.278	0.250
Isoleucine	1.128	1.010	1.058
Leucine	2.002	1.825	1.736
Tyrosine	0.798	0.764	0.663
Phenylalanine	1.515	1.421	1.414
Recovery	96.76	92.87	96.00
Oxidations			
Cystine	0.186	.201	0.163
Methionine	0.277	.309	0.290

MUSTARD	% SAMPLE	
	340-68 Mustard	146-68
Protein	26.0	19.2
Moisture	7.10	4.3
Lysine	1.210	1.198
Histidine	0.576	.521
Ammonia	0.532	.497
Arginine	1.444	1.005
Aspartic Acid	1.477	1.343
Threonine	0.891	.806
Serine	0.936	.820
Glutamic Acid	4.109	3.425
Proline	1.260	1.231
Glycine	1.073	.919
Alanine	0.910	.822
½ Cystine	0.664	.199
Valine	0.919	.974
Methionine	0.091	.332
Isoleucine	0.850	.688
Leucine	1.442	1.289
Tyrosine	0.584	.486
Phenylalanine	0.872	.694
Recovery	74.10	87.59
Oxidations		
Cystine	0.546	.503
Methionine	0.354	.364

PEAS % SAMPLE

	70-68 Broken Split Peas	332-68 Garden Pea	333-68 Small Brown Crowder	336-68 Crowder Cow Pea	328-68 191 Pois	393-68 Pigeon Pea
Protein	22.4	27.3	20.4	23.3	23.7	19.1
Moisture	10.8	12.4	12.7	14.1	9.9	9.8
Lysine	1.753	2.350	1.495	1.799	1.849	1.427
Histidine	0.564	0.695	0.653	0.836	0.555	.699
Ammonia	0.357	0.577	0.428	0.536	0.365	.334
Arginine	2.433	2.855	1.482	2.004	1.940	1.239
Aspartic Acid	2.897	3.124	2.248	3.061	2.697	2.264
Threonine	0.877	1.128	0.858	1.033	0.984	.744
Serine	1.118	1.393	1.121	1.377	1.111	.985
Glutamic Acid	4.208	5.146	3.821	4.937	4.013	4.250
Proline	1.177	1.146	0.983	1.283	0.876	.863
Glycine	0.986	1.305	0.947	1.092	1.067	.742
Alanine	1.008	1.314	0.994	1.117	1.084	.867
½ Cystine	0.153	0.271	0.107	0.000	0.402	.210
Valine	1.121	0.883	1.058	1.394	1.120	.862
Methionine	0.311	0.000	0.267	0.383	0.183	.182
Isoleucine	0.974	1.159	0.903	1.080	1.029	.745
Leucine	1.817	1.981	1.621	1.978	1.519	1.459
Tyrosine	0.763	0.898	0.728	0.838	0.824	.547
Phenylalanine	1.069	1.272	1.175	1.408	1.162	1.722
Recovery	101.2	100.51	97.36	107.51	99.78	95.94
Oxidations						
Cystine	.319	0.349	0.207	0.235	.371	.297
Methionine	.129	0.285	0.281	0.332	.241	.268

PUMPKIN % SAMPLE

	339-68 Pumpkin Seeds
Protein	30.0
Moisture	6.9
Lysine	1.206
Histidine	0.709
Ammonia	0.395
Arginine	4.571
Aspartic Acid	2.953
Threonine	0.848
Serine	1.560
Glutamic Acid	5.917
Proline	1.102
Glycine	1.780
Alanine	1.248
½ Cystine	0.696
Valine	1.289
Methionine	0.474
Isoleucine	1.067
Leucine	1.977
Tyrosine	1.115
Phenylalanine	1.449
Recovery	100.70
Oxidations	
Cystine	0.407
Methionine	0.666

RICE	% SAMPLE	
	152-68 Rice	116-68 Rice Polishings
Protein	7.1	8.8
Moisture	12.8	9.1
Lysine	0.283	.450
Histidine	0.224	.248
Ammonia	0.159	.268
Arginine	0.571	.755
Aspartic Acid	0.756	1.091
Threonine	0.275	.463
Serine	0.371	.539
Glutamic Acid	1.396	1.635
Proline	0.342	.572
Glycine	0.323	.612
Alanine	0.411	.751
½ Cystine	0.181	.062
Valine	0.447	.642
Methionine	0.108	.250
Isoleucine	0.309	.426
Leucine	0.511	.881
Tyrosine	0.334	.306
Phenylalanine	0.369	.526
Recovery	97.58	115.49
Oxidations		
Cystine	0.173	.148
Methionine	0.183	.121

SEMOLINA % SAMPLE

	1-68	18-68	301-68	53-68	20-68	52-68	52-68	9-68	306-68	300-68
	Semolina	FAMO Pasta	Cous Cous	Coarse Cous Cous	Birds Tounge	Semolina	Cous Cous	Semolina	Vermicilli	Cous Cous
Protein	13.7	12.2	12.5	11.8	10.1	11.9	14.0	13.7	12.4	13.1
Moisture	10.6	10.5	8.6	10.5	10.5	11.2	8.1	8.5	8.0	12.6
Lysine	.293	.271	.258	.258	.173	.316	.313	.269	.299	.301
Histidine	.261	.232	.223	.234	.154	.290	.291	.285	.254	.286
Ammonia	.445	.386	.389	.387	.362	.466	.477	.439	.406	.514
Arginine	.514	.456	.450	.451	.272	.543	.561	.444	.494	.560
Aspartic Acid	.595	.608	.510	.515	.398	.499	.584	.471	.549	.573
Threonine	.357	.336	.321	.328	.256	.316	.364	.291	.348	.380
Serine	.609	.586	.550	.550	.447	.550	.624	.513	.572	.679
Glutamic Acid	4.432	4.345	4.082	3.902	3.265	3.807	4.292	3.688	3.980	4.555
Proline	1.329	1.410	1.274	1.255	1.036	1.202	1.436	1.194	1.356	1.458
Glycine	.440	.415	.378	.374	.318	.372	.426	.360	.432	.472
Alanine	.406	.377	.337	.362	.278	.361	.407	.340	.405	.452
½ Cystine	.343	.287	.057	.381	.282	.412	.000	.189	.394	.616
Valine	.553	.530	.594	.456	.448	.505	.582	.437	.521	.208
Methionine	.114	.064	.115	.109	.125	.151	.154	.039	.126	.155
Isoleucine	.457	.445	.442	.414	.336	.421	.458	.374	.422	.507
Leucine	.908	.746	.744	.818	.687	.828	.923	.733	.856	.982
Tyrosine	.391	.347	.301	.308	.297	.333	.204	.310	.357	.444
Phenylalanine	.631	.565	.425	.533	.450	.559	.625	.499	.582	.715
Recovery	86.68	90.71	83.85	88.99	85.61	94.53	85.99	75.42	90.34	96.99
Oxidation										
Cystine	.316	.298	.287	.290	.267	.302	.372	.310	.299	.305
Methionine	.222	.196	.189	.191	.168	.204	.226	.220	.208	.202

SEMOLINA (2) % SAMPLE

	14-68 Semolina
Protein	13.5
Moisture	10.9
Lysine	.304
Histidine	.268
Ammonia	.491
Arginine	.518
Aspartic Acid	.638
Threonine	.361
Serine	.621
Glutamic Acid	4.660
Proline	1.571
Glycine	.459
Alanine	.428
½ Cystine	.486
Valine	.458
Methionine	.061
Isoleucine	.497
Leucine	.966
Tyrosine	.397
Phenylalanine	.669
Recovery	93.20
Oxidations	
Cystine	0.289
Methionine	0.217

SORGHUM % SAMPLE

	338-68 Hq.-Treated Sorghum	126A-68 Sorghum	318-68 SH20 Hybrid Mawcain	319-68 Sorghum Vulgare	173-68 Pak. White Sorghum
Protein	10.2	9.5	16.3	10.5	11.2
Moisture	12.6	12.3	11.6	12.1	10.1
Lysine	0.220	0.182	0.280	0.238	.268
Histidine	0.225	0.193	0.330	0.210	.248
Ammonia	0.283	0.261	0.475	0.327	.363
Arginine	0.363	0.333	0.568	0.361	.424
Aspartic Acid	0.818	0.664	1.115	0.862	.883
Threonine	0.365	0.314	0.507	0.341	.385
Serine	0.481	0.438	0.709	0.530	.555
Glutamic Acid	2.441	2.072	3.921	2.495	2.506
Proline	0.736	0.743	1.263	1.169	.915
Glycine	0.283	0.314	0.441	0.329	.351
Alanine	0.925	0.894	1.575	1.028	1.113
½ Cystine	0.045	0.190	0.301	0.000	.102
Valine	0.606	0.481	0.818	0.517	.666
Methionine	0.199	0.043	0.200	0.021	.173
Isoleucine	0.532	0.384	0.664	0.414	.468
Leucine	1.410	1.254	2.089	1.446	1.665
Tyrosine	0.341	0.384	0.696	0.399	.477
Phenylalanine	0.388	0.511	0.880	0.558	.597
Recovery	93.50	90.87	92.07	97.17	88.93
Oxidations:					
Cystine	.195	0.141	0.269	0.158	.230
Methionine	.168	0.120	0.267	0.099	.226

SOYBEAN	% SAMPLE	
	151-68	325-68
		204
	Lobia	Soja
Protein	23.7	38.4
Moisture	10.0	8.1
Lysine	1.746	2.800
Histidine	0.780	1.094
Ammonia	0.415	0.799
Arginine	1.725	3.275
Aspartic Acid	3.065	4.996
Threonine	0.959	1.654
Serine	1.286	2.150
Glutamic Acid	4.725	8.301
Proline	1.388	1.999
Glycine	1.015	1.723
Alanine	1.046	1.757
½ Cystine	0.0	1.101
Valine	1.300	1.925
Methionine	0.277	0.467
Isoleucine	1.061	1.942
Leucine	1.727	2.822
Tyrosine	0.799	1.519
Phenylalanine	1.418	2.124
Recovery	97.08	102.93
Oxidations		
Cystine	0.218	.4828
Methionine	0.189	.1837

SWANK % SAMPLE

	177-68 Swank
Protein	10.0
Moisture	7.10
Lysine	.240
Histidine	.207
Ammonia	.267
Arginine	.409
Aspartic Acid	.650
Threonine	.357
Serine	.502
Glutamic Acid	2.147
Proline	.649
Glycine	.299
Alanine	.872
½ Cystine	.136
Valine	.508
Methionine	.195
Isoleucine	.414
Leucine	.976
Tyrosine	.367
Phenylalanine	.564
Recovery	88.63
Oxidations	
Cystine	.180
Methionine	.240

WHEAT % SAMPLE

	348-68 Ground Shorts	124A-68 White Wheat	128A-68 Stone Ground White Wheat	127-68 White Wheat	307-68 NA-3 2777
Protein	21.1	10.7	11.6	12.2	11.8
Moisture	13.1	13.2	11.7	11.9	9.2
Lysine	0.586	0.324	0.333	0.322	0.315
Histidine	0.529	0.244	0.260	0.270	0.260
Ammonia	0.864	0.340	0.318	0.385	0.307
Arginine	1.126	0.509	0.573	0.575	0.546
Aspartic Acid	1.225	0.598	0.661	0.601	0.671
Threonine	0.657	0.342	0.377	0.366	0.335
Serine	1.107	0.535	0.557	0.564	0.584
Glutamic Acid	8.613	3.517	3.885	3.814	3.929
Proline	2.533	1.024	1.276	1.169	1.252
Glycine	0.928	0.456	0.474	0.471	0.431
Alanine	0.777	0.427	0.438	0.438	0.402
½ Cystine	0.702	0.353	0.310	0.471	0.232
Valine	1.006	0.505	0.606	0.478	0.515
Methionine	0.159	0.123	0.181	0.128	0.055
Isoleucine	0.800	0.394	0.445	0.423	0.426
Leucine	1.390	0.764	0.720	0.808	0.701
Tyrosine	0.708	0.362	0.344	0.368	0.339
Phenylalanine	1.101	0.522	0.512	0.555	0.557
Recovery	108.51	96.11	94.41	91.37	89.54
Oxidations:					
Cystine	.4569	0.255	0.276	0.331	0.245
Methionine	.1918	0.160	0.177	0.190	0.120

WHEAT % SAMPLE
continued

	313-68 BT3597	311-68 BT2511	58-68 Coarse Bran	91-68 #1	312-68 BT908
Protein	11.5	11.1	14.1	11.6	10.5
Moisture	11.6	10.7	11.4	11.8	11.3
Lysine	0.332	0.317	0.598	0.316	0.304
Histidine	0.254	0.239	0.392	0.238	0.232
Ammonia	0.353	0.366	0.322	0.394	0.339
Arginine	0.549	0.530	0.994	0.540	0.499
Aspartic Acid	0.626	0.652	1.130	0.685	0.624
Threonine	0.344	0.337	0.494	0.329	0.328
Serine	0.527	0.538	0.672	0.580	0.523
Glutamic Acid	3.698	3.530	2.941	3.891	3.457
Proline	1.218	1.210	0.980	1.266	1.186
Glycine	0.436	0.455	0.817	0.421	0.431
Alanine	0.405	0.414	0.731	0.402	0.393
½ Cystine	0.372	0.383	0.392	0.308	0.353
Valine	0.501	0.496	0.697	0.474	0.476
Methionine	0.151	0.069	0.151	0.035	0.052
Isoleucine	0.386	0.330	0.399	0.374	0.352
Leucine	0.729	0.736	0.868	0.732	0.686
Tyrosine	0.316	0.326	0.399	0.321	0.323
Phenylalanine	0.517	0.479	0.570	0.530	0.472
Recovery	92.61	94.47	91.78	93.90	95.71
Oxidations:					
Cystine	0.267	0.276	0.315	.263	0.230
Methionine	0.158	0.164	0.194	.182	0.129

	WHEAT (2) % SAMPLE				
	308-68 3225	310-68 BT2306	93-68 Durum	57-68 Fine Bran	55-68 Soft Red Winter
Protein	10.3	10.9	13.0	14.9	11.7
Moisture	10.9	11.7	11.7	11.1	12.6
Lysine	0.294	0.280	0.324	0.614	0.332
Histidine	0.231	0.227	0.266	0.371	0.258
Ammonia	0.308	0.300	0.371	0.333	0.374
Arginine	0.523	0.486	0.553	0.957	0.580
Aspartic Acid	0.589	0.525	0.631	1.103	0.586
Threonine	0.301	0.324	0.385	0.521	0.343
Serine	0.492	0.503	0.608	0.665	0.525
Glutamic Acid	3.143	3.364	4.070	3.068	3.584
Proline	1.114	1.005	1.255	1.092	1.032
Glycine	0.404	0.425	0.527	0.773	0.461
Alanine	0.374	0.375	0.444	0.728	0.413
½ Cystine	0.265	0.430	0.436	0.405	0.335
Valine	0.463	0.455	0.549	0.800	0.581
Methionine	0.086	0.041	0.145	0.200	0.131
Isoleucine	0.332	0.368	0.444	0.457	0.412
Leucine	0.660	0.708	0.846	0.883	0.699
Tyrosine	0.297	0.337	0.406	0.428	0.352
Phenylalanine	0.469	0.488	0.582	0.591	0.531
Recovery	92.24	87.45	88.50	88.65	91.30
Oxidations:					
Cystine	0.247	0.250	.325		0.296
Methionine	0.034	0.151	.217		0.163

WHEAT (2) % SAMPLE
continued

	309-68 3424	92-68 #2	56-68 Straight Grade Flour "Force"	29-68 Durhum Wheat	32A-68 Bran
Protein	11.1	13.6	9.6	13.0	15.1
Moisture	11.5	11.4	12.4	11.3	9.5
Lysine	0.312	0.342	0.207	.222	.573
Histidine	0.251	0.305	0.200	.173	.385
Ammonia	0.326	0.372	0.371	.487	.291
Arginine	0.534	0.652	0.392	.336	1.014
Aspartic Acid	0.566	0.757	0.392	.476	1.097
Threonine	0.338	0.398	0.272	.319	.488
Serine	0.538	0.699	0.461	.581	.646
Glutamic Acid	3.449	4.780	3.668	4.147	2.792
Proline	1.023	1.557	1.092	1.232	.821
Glycine	0.445	0.499	0.337	.429	.845
Alanine	0.416	0.470	0.291	.368	.721
½ Cystine	0.354	0.391	0.366	.322	.395
Valine	0.487	0.621	0.440	.566	.375
Methionine	0.083	0.129	0.104	.151	.052
Isoleucine	0.399	0.419	0.341	.438	.454
Leucine	0.761	0.865	0.611	.873	.922
Tyrosine	0.351	0.412	0.316	.365	.423
Phenylalanine	0.520	0.696	0.477	.570	.571
Recovery	91.26	93.37	97.67	84.74	81.79
Oxidations:					
Cystine	0.246	.328	0.215	.293	.350
Methionine	0.192	.231	0.112	.198	.198

WHEAT (3) % SAMPLE

	138-68 Bran	13-68 FAMO "Force" Flour	30-68 Shorts	31-68 Midds	123-68 Atta
Protein	14.6	9.9	16.6	16.3	11.3
Moisture	9.5	11.2	9.0	9.0	10.8
Lysine	.509	.286	.731	.620	.289
Histidine	.361	.175	.397	.380	.231
Ammonia	.289	.307	.353	.319	.362
Arginine	.893	.350	1.074	.994	.490
Aspartic Acid	.970	.388	1.261	1.136	.558
Threonine	.442	.259	.599	.516	.334
Serine	.602	.447	.724	.663	.522
Glutamic Acid	2.938	3.207	3.308	2.929	3.322
Proline	.904	.989	1.272	.900	1.038
Glycine	.753	.328	.857	.826	.429
Alanine	.635	.283	.797	.743	.384
½ Cystine	.407	.263	.223	.349	.856
Valine	.629	.398	.798	.709	.506
Methionine	.104	.065	.162	.125	.153
Isoleucine	.421	.323	.536	.477	.381
Leucine	.864	.651	.924	.965	.770
Tyrosine	.397	.286	.441	.428	.333
Phenylalanine	.541	.431	.602	.589	.495
Nitrogen Recovery	81.53	85.91	86.69	79.96	89.05
Oxidation	.338	.272	.362	.364	.285
Cystine	.202	.162	.242	.237	.385

WHEAT (3) % SAMPLE
continued

	170-68 Pak Wheat	171-68 Red Pak Wheat	155-68 White Flour	137-68 Atta
Protein	11.3	12.1	11.5	10.2
Moisture	10.8	10.7	11.5	10.3
Lysine	.349	.345	.375	.315
Histidine	.261	.294	.308	.225
Ammonia	.372	.390	.532	.361
Arginine	.596	.613	.669	.485
Aspartic Acid	.639	.624	.709	.588
Threonine	.357	.350	.429	.305
Serine	.550	.536	.715	.477
Glutamic Acid	3.493	3.585	4.553	2.910
Proline	1.091	1.100	1.486	1.041
Glycine	.476	.464	.574	.429
Alanine	.439	.416	.504	.372
½ Cystine	.378	.398	.548	.134
Valine	.533	.526	.831	.488
Methionine	.118	.126	.150	.162
Isoleucine	.407	.398	.513	.342
Leucine	.821	.793	1.013	.682
Tyrosine	.346	.362	.466	.306
Phenylalanine	.526	.544	.696	.443
Nitrogen Recovery	96.21	91.32	121.31	93.74
Oxidation	.302	.286	.291	.259
Cystine	.206	.185	.179	.169

WHEAT (4) % SAMPLE

	141-68 Coarse Short	142-68 Short Flour	150-68 Pak. Wheat	139-68 Shorts
Protein	15.9	16.9	14.5	14.4
Moisture	7.3	7.3	8.0	11.0
Lysine	.649	.545	.487	.571
Histidine	.409	.341	.409	.390
Ammonia	.440	.533	.738	.299
Arginine	1.105	.848	.823	.935
Aspartic Acid	1.321	.999	1.031	1.166
Threonine	.513	.469	.518	.456
Serine	.683	.662	.852	.604
Glutamic Acid	2.825	3.123	5.605	2.693
Proline	.856	.906	1.851	.842
Glycine	.896	.748	.716	.810
Alanine	.774	.651	.660	.679
½ Cystine	.212	.124	.738	.330
Valine	.731	.695	.877	.725
Methionine	.080	.101	.179	.164
Isoleucine	.457	.449	.573	.416
Leucine	.940	.905	1.156	.885
Tyrosine	.428	.397	.503	.405
Phenylalanine	.596	.558	.769	.550
Recovery	88.23	78.69	121.02	85.62
Oxidations				
Cystine	.312	.302	.570	0.318
Methionine	.198	.193	.357	0.173

MISCELLANEOUS (1) % SAMPLE

	84-68 Halba-Eat	77-68 Bird Seed	86-68 Eillan	61-68 Mill Feed
Protein	25.5	16.3	10.6	14.6
Moisture	9.70	10.0	10.4	7.8
Lysine	1.637	0.357	.353	.565
Histidine	0.617	0.329	.249	.325
Ammonia	0.401	0.395	.273	.325
Arginine	2.344	0.947	.474	.885
Aspartic Acid	2.864	0.904	.835	.961
Threonine	0.950	0.403	.395	.473
Serine	1.248	0.680	.479	.614
Glutamic Acid	4.266	4.842	1.834	2.523
Proline	1.030	1.198	.598	.812
Glycine	1.183	0.479	.338	.705
Alanine	0.997	0.684	.730	.668
½ Cystine	0.143	0.491	.204	.327
Valine	1.167	0.791	.636	.766
Methionine	0.159	0.208	.140	.150
Isoleucine	1.245	0.669	.407	.441
Leucine	1.498	1.059	.987	.869
Tyrosine	0.783	0.421	.317	.386
Phenylalanine	1.042	0.902	.489	.553
Recovery	89.62	86.62	85.56	81.46
Oxidations:				
Cystine	.1467	.3909	.225	.302
Methionine	.0625	.1493	.258	.201

MISCELLANEOUS % SAMPLE
continued

	175-68 White Grams	168-68 Dehulled Mash	178-68 Oil Seed	62-68 Mill Feed
Protein	20.3	23.6	24.1	15.6
Moisture	7.6	8.0	6.5	8.0
Lysine	1.417	1.265	1.128	.640
Histidine	.515	.498	.848	.415
Ammonia	.431	.431	.505	.340
Arginine	1.674	1.155	1.405	1.053
Aspartic Acid	2.435	2.544	1.800	1.079
Threonine	.778	0.654	.802	.520
Serine	1.050	1.093	.833	.684
Glutamic Acid	3.424	3.336	3.206	3.242
Proline	.918	.706	1.142	1.064
Glycine	.782	.691	1.100	.824
Alanine	.746	.804	.881	.727
½ Cystine	.164	.000	.000	.252
Valine	.900	1.154	1.019	.723
Methionine	.387	.224	.000	.212
Isoleucine	.829	.828	.845	.491
Leucine	1.497	1.613	1.428	.995
Tyrosine	.561	.563	.576	.420
Phenylalanine	1.081	1.134	.895	.612
Recovery	86.16	74.44	77.29	87.72
Oxidations:				
Cystine	.349	.204	.427	.358
Methionine	.295	.418	.353	.240

MISCELLANEOUS(2) % SAMPLE

	112A-68 Guar Toxic	113A-68 Guar Detoxic	134A-68 Mash	186-68 Ground Nut
Protein	49.1	29.4	23.5	43.8
Moisture	8.0	8.0	8.0	10.0
Lysine	2.107	1.268	1.672	1.476
Histidine	1.167	.675	.633	.980
Ammonia	.723	.484	.404	.896
Arginine	6.077	2.347	1.498	4.965
Aspartic Acid	5.412	3.253	3.019	5.284
Threonine	1.486	1.302	.785	1.196
Serine	2.306	1.595	1.237	2.215
Glutamic Acid	10.329	4.361	4.048	9.071
Proline	1.680	1.096	.927	1.925
Glycine	2.638	1.848	.967	2.677
Alanine	1.819	1.503	1.004	1.826
½ Cystine	.677	.224	.000	0.955
Valine	1.767	.548	1.200	1.852
Methionine	.489	.329	.367	-.407
Isoleucine	1.481	1.234	1.017	1.471
Leucine	2.856	2.403	1.949	2.966
Tyrosine	1.692	1.361	.712	1.598
Phenylalanine	1.700	1.414	1.313	2.176
Recovery	93.15	87.97	89.82	97.80
Oxidations:				
Cystine	.627	.303	.196	.697
Methionine	.545	.408	.392	.548

MISCELLANEOUS (2) % SAMPLE
continued

	169-68 Split Mash	159-68 Nut	147-68 Oilseed	156-68 Suji
Protein	22.2	9.3	28.2	10.5
Moisture	8.0	10.0	10.0	8.0
Lysine	1.508	.388	1.362	.293
Histidine	.581	.205	.722	.246
Ammonia	.430	.161	.639	.451
Arginine	1.374	1.195	2.025	.446
Aspartic Acid	2.599	.822	1.831	.558
Threonine	.751	.317	.999	.325
Serine	1.203	.492	1.192	.515
Glutamic Acid	3.942	1.522	4.799	3.428
Proline	.968	.446	1.731	1.176
Glycine	.891	.469	1.394	.405
Alanine	.963	.462	1.222	.369
½ Cystine	.000	.122	.678	.245
Valine	.963	.455	1.382	.458
Methionine	.298	.119	.398	.152
Isoleucine	.920	.341	.960	.356
Leucine	1.821	.653	1.805	.717
Tyrosine	.703	.260	.817	.310
Phenylalanine	1.242	.335	1.083	.462
Recovery	89.23	95.55	86.73	99.19
Oxidations:				
Cystine	.207	.125	.709	.254
Methionine	.410	.216	.432	.143

MISCELLANEOUS (3) % SAMPLE

	179-68 Black Mash	145-68 Defatted Flax	323-68 Haricots
Protein	23.1	25.6	25.8
Moisture	8.0	9.8	10.2
Lysine	1.471	.963	1.109
Histidine	.582	.518	.450
Ammonia	.397	.543	.204
Arginine	1.358	2.185	1.128
Aspartic Acid	2.722	2.499	1.968
Threonine	.787	.996	.690
Serine	1.247	1.248	.952
Glutamic Acid	4.089	5.306	2.695
Proline	.919	.925	.664
Glycine	.906	1.570	.588
Alanine	.998	1.190	.611
½ Cystine	.268	.541	.095
Valine	1.256	1.291	.705
Methionine	.360	.433	.119
Isoleucine	1.018	1.045	.694
Leucine	1.902	.551	1.263
Tyrosine	.730	.681	.520
Phenylalanine	1.319	1.187	.978
Recovery	88.02	92.15	54.64
Oxidations:			
Cystine	.198	.475	.242
Methionine	.442	.465	.302

MISCELLANEOUS (3) % SAMPLE
continued

	342A-68 Whole Sunflower	342B-68 Sunflower Inside	342C-68 Sunflower Shell
Protein	14.6	24.4	6.1
Moisture	4.3	4.3	9.3
Lysine	.981	.588	.232
Histidine	.654	.359	.137
Ammonia	.612	.439	.165
Arginine	2.460	1.275	.400
Aspartic Acid	2.700	1.586	.606
Threonine	.970	.581	.229
Serine	1.179	.677	.295
Glutamic Acid	5.835	3.465	1.090
Proline	1.098	.536	.213
Glycine	1.538	.867	.346
Alanine	1.158	.662	.252
½ Cystine	.761	.000	.000
Valine	1.245	.838	.333
Methionine	.374	.080	.019
Isoleucine	1.150	.631	.223
Leucine	1.733	.842	.317
Tyrosine	.730	.312	.122
Phenylalanine	1.325	.579	.253
Recovery	174.54	59.26	86.01
Oxidations:			
Cystine	.472	.264	.088
Methionine	.573	.335	.101