AGENCY FOR INTERNATIONAL DEVELOPMENT
WASHINGTON, D. C. 20523

BIBLIOGRAPHIC INPUT SHEET

FOR AID USE ONLY
BATCH #14

1. SUBJECT CLASSIFICATION

A. PRIMARY: Agriculture — AA00-0000-0000

B. SECONDARY: General

2. TITLE AND SUBTITLE
Simulating a developing agricultural economy: methodology and planning capability

3. AUTHOR(S)
Halter,A.N.; Hayenga,M.L.; Manetsch,T.J.

4. DOCUMENT DATE	5. NUMBER OF PAGES	6. ARC NUMBER
1970	14p. + 21p.	ARC

7. REFERENCE ORGANIZATION NAME AND ADDRESS
Mich.State

8. SUPPLEMENTARY NOTES *(Sponsoring Organization, Publishers, Availability)*
(In Am.j.of agr.economics,v.52,no.2,p.272-284)
(Reprint distributed by MSU with companion papers from AAEA-Econometric Soc.meeting 1969 under title: Selected papers on computer simulation models)

9. ABSTRACT

10. CONTROL NUMBER
PN-RAA-719

11. PRICE OF DOCUMENT

12. DESCRIPTORS
Interactions
Planning
Sector analysis
Simulation

13. PROJECT NUMBER

14. CONTRACT NUMBER
CSD-1557 Res.

15. TYPE OF DOCUMENT

AID 590-1 (4-74)

10

SIMULATING A DEVELOPING AGRICULTURAL ECONOMY: METHODOLOGY AND PLANNING CAPABILITY

BY

A. N. HALTER, M. L. HAYENGA, AND T. J. MANETSCH

Reprinted from
AMERICAN JOURNAL OF AGRICULTURAL ECONOMICS
Vol. 52, No. 2, May, 1970

Simulating a Developing Agricultural Economy: Methodology and Planning Capability*

A. N. HALTER, M. L. HAYENGA, AND T. J. MANETSCH

SIMULATION—a systems analysis approach—can provide a comprehensive view of a complex system [3, 5, 7, 9, 10, 11, 16, 17, 24, 29]. In development planning we are interested in studying and approximating, via a mathematical model, those relationships within the economy that are important in the development process. By translating this model into a computer language, the likely end results of alternative development schemes can be evaluated through manipulation of the specified computer simulation model.

We are interested in exploring this approach to development planning because it might provide a more informed basis for planning development [12, 13]. The design of development, or planning, is especially important in less developed countries because they usually have comparatively few funds available relative to their apparent needs. Consequently, allocation mistakes appear to have a somewhat greater opportunity cost in terms of human well-being in the underdeveloped setting.

Planning in any country is a process fraught with uncertainty. Frequently, there is uncertainty about likely immediate and longer range effects of development strategies. Further, the degree to which policies aimed at one set of economic phenomena may have unintended side effects on other aspects of the society is often uncertain. The paucity of information available for decision making is often cited in developed countries, with even more frequent mention in less developed countries. Poor communication facilities, especially prevalent in LDC's, often impede the accumulation of potentially available relevent information which might otherwise provide a reasonably well-informed basis for decision making. Given these difficulties and uncertainties, let us consider the utility of a systems analysis approach—simulation—in studying the dynamic interactions among variables affecting the rate of development and in subsequently planning development.

A systems analysis approach attempts to isolate and formulate into a mathematical model those sectors and components of the economy and those physical, biological, economic, and social relationships within them which are most important in affecting the development effort. The systems analysis approach, in the development context, emphasizes those relationships that can be affected by or are vital to the evaluation of either public or private development policies. In the process of formulating the simulation model, relevant information is gathered and incorporated into the model. It is then available for analyzing alternative development strategies and assisting in the critical resource allocation decisions.

In this paper we first discuss simulation as a problem-solving approach. We then illustrate the application of this approach to the development problems of the Nigerian agricultural economy. In so doing, we describe the route taken in formulating a simulation model of an economy primarily agricultural in nature. Finally, we comment on the potential planning capability of simulation models as applied to development planning.

Simulation Methodology

Simulation is viewed here as an iterative problem-solving process which involves problem formulation, mathematical modeling, refinement and testing of the resulting model, and creative design and execution of simulation experiments intended to provide answers to the questions posed. We conceptualize the process as shown in Figure 1. As the arrows indicate, the general movement of the process is from definition of the problem toward model application, but the reverse arrows indicate that the process is iterative or "learning" in nature. A prior stage might have to be repeated on the basis of information acquired during a subsequent stage. In this manner changes in model structure, parameters, etc., are introduced which lead to a better model. The "output" of a simulation is a set of system per-

* This paper was developed under research contract with the U.S. Agency for International Development. The order of authorship does not imply degree of contribution; the authors are members of a research team at Michigan State University.

A. N. HALTER *is visiting professor of agricultural economics,* M. L. HAYENGA *is assistant professor of agricultural economics, and* T. J. MANETSCH *is associate professor of systems science, all at Michigan State University.*

formance variables associated with each set of policies and/or strategies. This allows the decision maker to choose among a range of alternatives, using his own criteria.

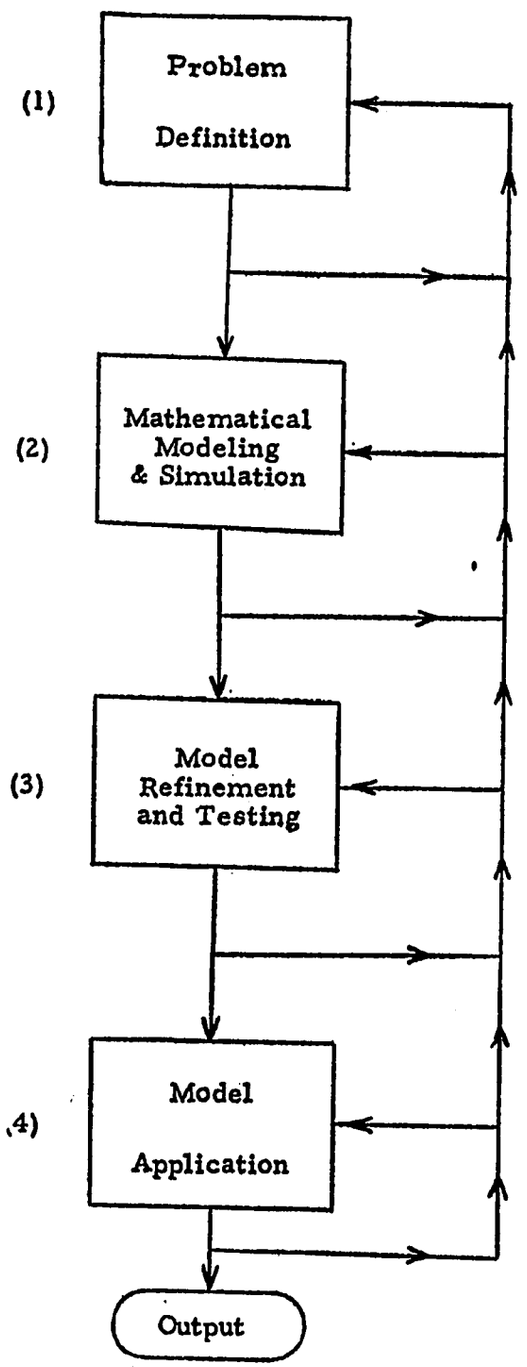

Figure 1. Computer simulation as an iterative problem-solving process

Problem Definition

Space and time are not available here to adequately describe "problem definition" and its fundamental importance to computer simulation of any system. The objective of this initial phase is to clearly specify the functions and mechanisms of the system, what measures of system performance are appropriate, and what alternative means are available for achieving objectives —in a nut shell, to identify the major questions.

In our large-scale system study, effective problem definition required creative interaction among decision makers, planners, systems analysts, and other specialists. The interdisciplinary research team at Michigan State University was fortunate to have available professionals with a backlog of experience in the Nigerian agricultural economy. The Consortium for the Study of Nigerian Rural Development (CSNRD), which was headquartered at Michigan State University, provided substantial information about the country and served as a center for contacts with people in the United States and Nigeria who were knowledgeable about African agricultural and industrial development [15]. Further, the CSNRD collaborations with AID, FAO, and Nigerian planners and policy makers provided us with a fairly clear picture of the current governmental and planning institutions related to the agricultural economy and to the tools they use to influence the economy. This aided our selection of the planning clientele toward which this model should be oriented [8, 32]. As a consequence, the major policy questions and the corresponding relevant sectors, interrelationships, and variables in the Nigerian economy were isolated more easily than they might have been.

The following are examples of questions we proposed to answer. They illustrate the policy level at which we were aiming and thereby help to specify the level of aggregation toward which the simulation model is oriented.[1]

What would be the impact on farm income, national income, export earnings, level of demand for farm and nonfarm products, and levels of employment of:

(1) increasing marketing board prices paid to export crop producers (i.e. reducing the

[1] The Nigerian model can be differentiated from the simulation models built by Holland for the Indian and Venezuelan economies and Kresge's model of the Pakistan economy [9, 10, 16] by its adaptability to questions which require either very macro or intermediate levels of agregation in contrast to the macro considerations alone of the Holland and Kresge models.

spread between world and domestic prices)?

(2) increasing production research and extension efforts on export crops?

(3) increasing research on food crop varieties and production practices, and subsequently funding production campaigns to implement the most promising findings?

(4) stimulating private investment or making public investments in agricultural input industries, storage and processing facilities, and required supporting infra-structure improvements?

Specifying the relevant policy-making clientele and their most important questions determined which sectors and/or interrelationships needed particular attention within the model. The major sectors and flows, as presently conceptualized within the simulation model of the Nigerian economy, are shown in Figure 2. As can be seen from the diagram, our emphasis is on the agricul-

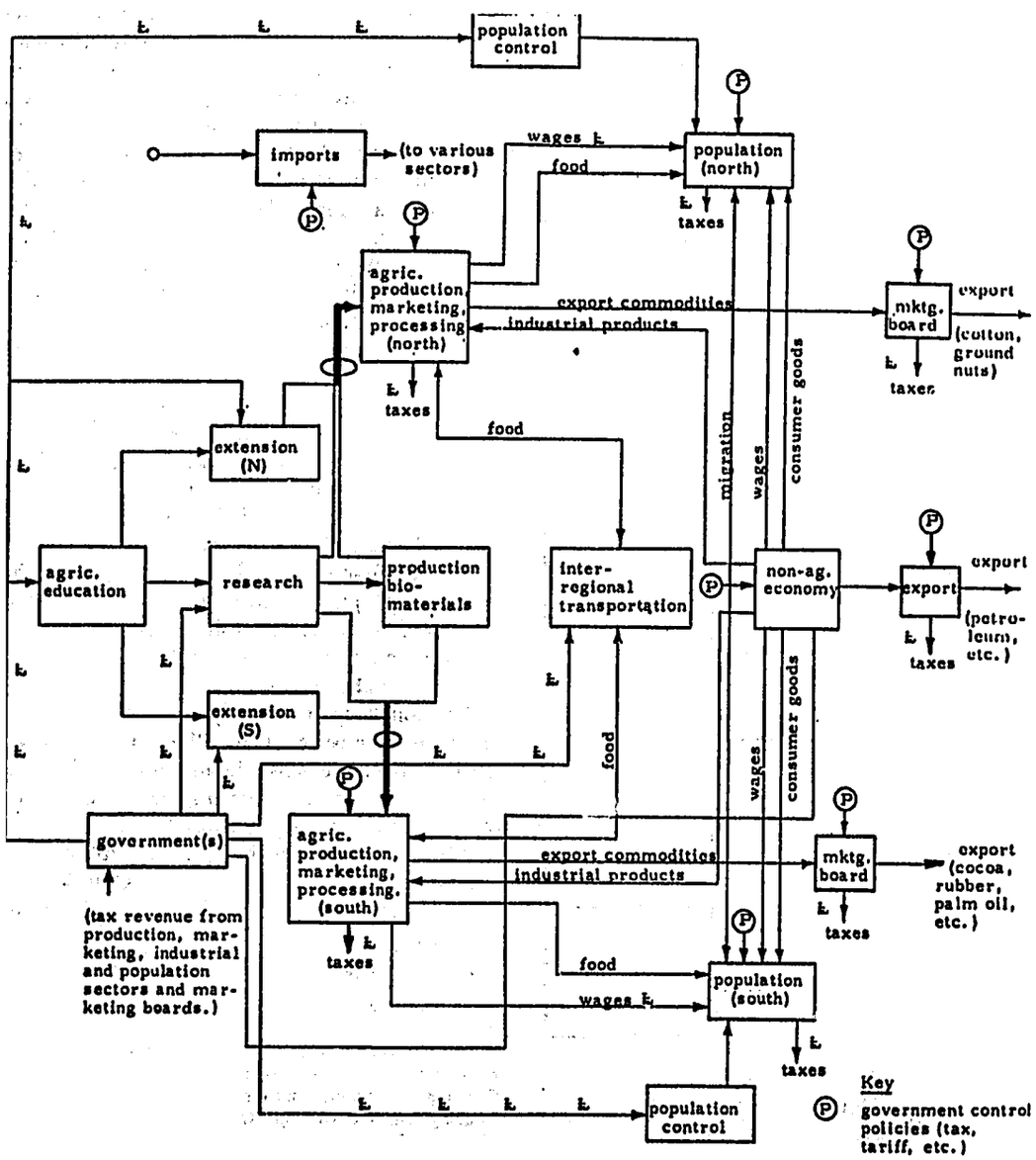

Figure 2. Major sectors and flows of a simulation model of the Nigerian economy

tural sector which has been the major source of past economic growth. Since agriculture contains most of the productive resources in Nigeria (contributing 65 percent of the gross domestic product and 66 percent of Nigerian exports in 1962–63), its role in future growth will be very important. Some planners are interested in evaluating alternative policies affecting regional production specialization and trade. These typically involve likely farmer responses to various economic incentives or government assistance projects, etc. Consequently, our model has a commodity orientation, emphasizing export crops. To simply consider questions related to regional specialization and interregional trade, a two-region (North and South) model is currently conceived. However, several ecological zones within each region are also differentiated to allow the model to more readily assist planners at the regional and state levels.

Although this diagram shows the main components, sectors, and flows to be incorporated into the simulation model, it does not show the basic political decision mechanisms and their point of impact on the agricultural development and adjustment process in the Nigerian economy. In Figure 3, the relationship between specific policy variables and the components incorporating the main streams of economic activity are shown. These range from input allocation decisions to production results, following through the marketing process to consumption. The flows of material, money, price information, and regulatory activities are shown. Thus, this general mechanism applies to virtually any commodity produced. Specifically, it applies to staple food crops, livestock, and the export crops (i.e. oil palm, ground nuts, cotton, cocoa and rubber) in the agricultural production and marketing sector of the model.

Mathematical Modeling and Simulation

Conceptually, a simulation model of an economic system can be viewed in the following general mathematical form:

$$\psi(t+1) = F[\psi(t), \alpha(t), \beta(t), \gamma(t)]$$
$$\theta(t) = H[\psi(t), \psi_w(t), \alpha(t), \beta(t), \gamma(t)]$$
$$\pi(t) = G[\psi(t), \alpha(t), \beta(t), \gamma(t)]$$

where:

ψ = a vector (set) of variables that defines the state of the simulated system at any given time. Typical state variables might be production capacities, land allocated to various activities, prices, population by subgroups, levels of technology, etc.

ψ_w = a vector of variables that describes the state of the system in the real world.

$\alpha(t)$ = a set of parameters that defines the structure of the system, e.g., technical coefficients, etc. (Some of these may be subject to variation within the model.)

$\beta(t)$ = a set of exogenous variables that influence system behavior, e.g., world prices, weather, etc.

$\gamma(t)$ = a set of policy variables that can be controlled to alter the system's performance in various directions, e.g., investment alternatives, tax policies, etc.

$\theta(t)$ = a set of intermediate output variables that measure how well the model of the system $\psi(t)$ corresponds to reality $\psi_w(t)$, e.g., residual sum of squares, R^2, etc.

$\pi(t)$ = a set of output variables which measure the system's simulated performance, e.g., profit, income, rates of growth, per capita income, foreign exchange earnings, etc.

The first equation is a difference equation formulation of the system model which describes the state of the system and subsequent performance at discrete points in time. This formulation is particularly amenable to digital computer solution. The second equation applies only in the model refinement and testing stage. The third equation is relevant in model application when the performance of the system is simulated over time under various policy alternatives.

This general formulation is exemplified in the hundreds of parameters and structural relationships that are actually incorporated in the model. Because space does not allow a detailed description of the entire computer program which makes explicit the components, variables, and interrelationships of the agricultural sector, Figure 4 depicts in more detail the major components of the Northern regional model previously mentioned.

The Northern Region Model

The agricultural economy of Nigeria is broadly viewed as comprising two interacting regions: the southern tree and root crop region and the northern annual crop and livestock region.

The current model views Northern Nigeria

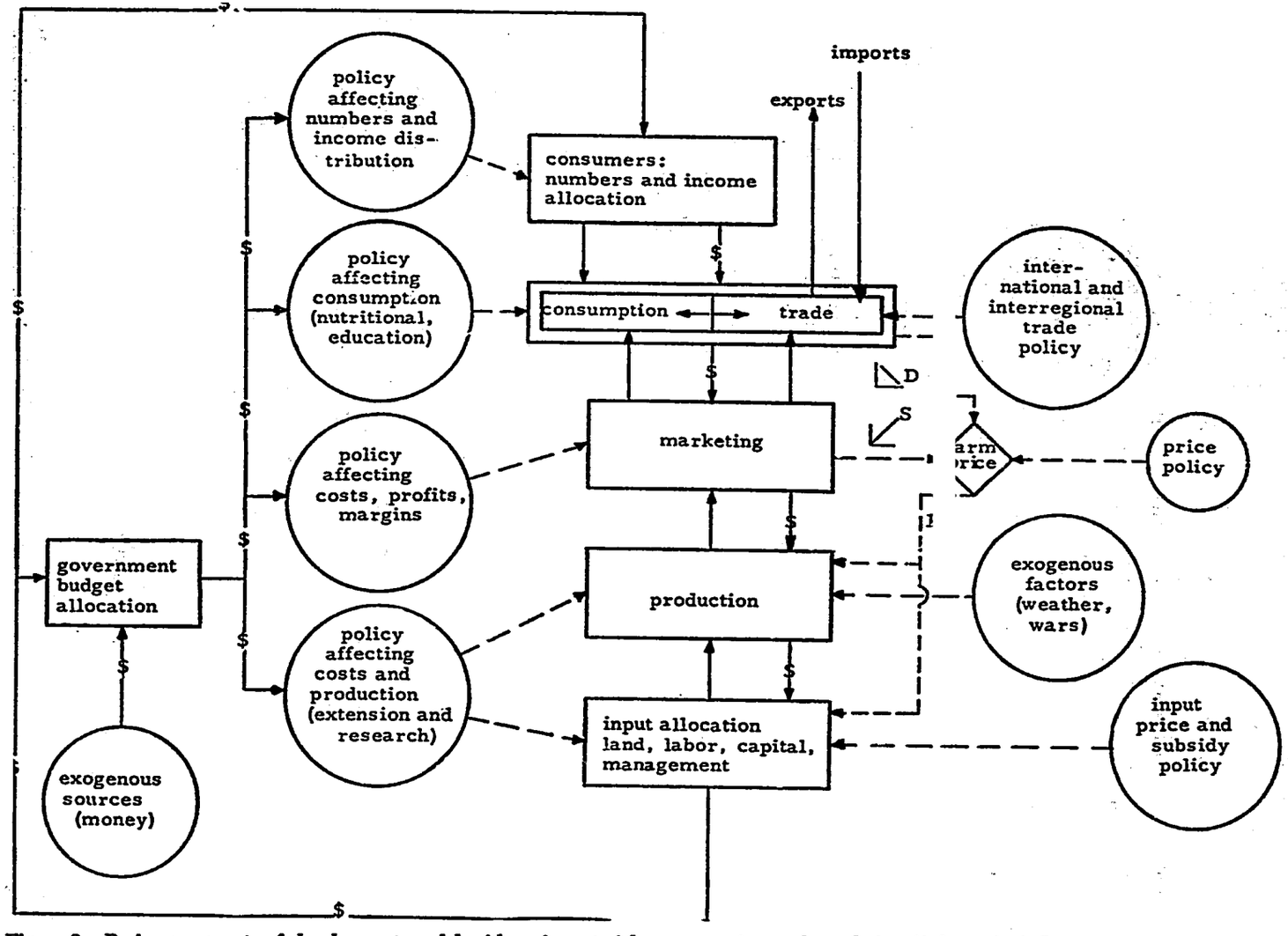

Figure 3. Basic components of development model with main material, money, price, and regulation (information) flows

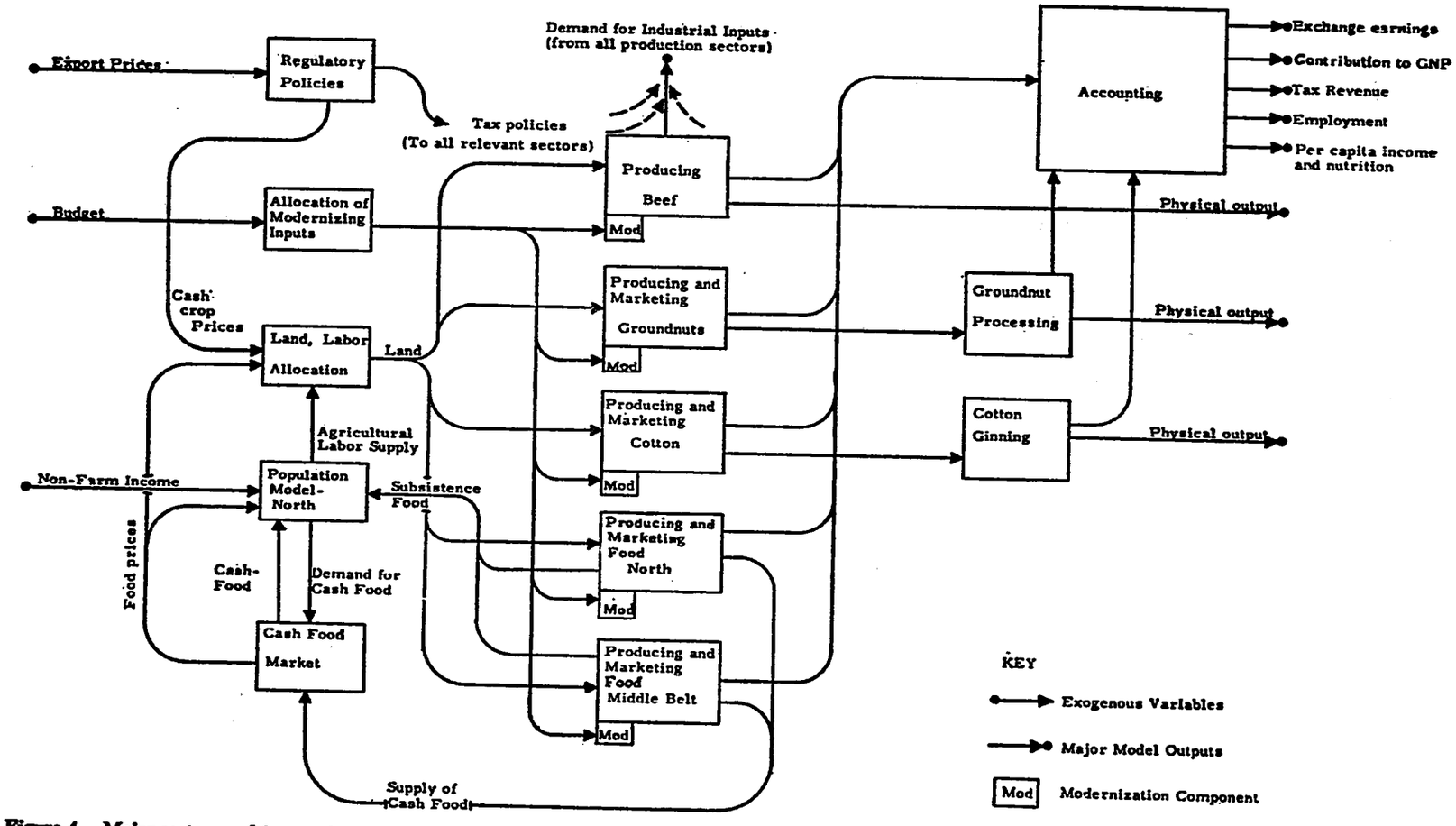

Figure 4. Major sectors and interactions of the Northern Nigerian agricultural model

(the old Northern Region) as being divided into four distinct subregions: (1) land area uniquely suitable for production of groundnuts or food crops, (2) land area suitable for production of cotton or food crops, (3) an area on which groundnuts, cotton, and food crops can compete with each other for the use of the land, and (4) land suitable only for food crops. The four production alternatives for these four regions are represented by the production and marketing blocks in Figure 4. The beef production block represents the other major agricultural producing activity of Northern Nigeria[2] which currently is assumed to be noncompetitive with crops for land resources.

In this part of the model, the major outputs are quantities of commodities from various production activities and other measures of system performance. These include level of gross domestic product, tax revenues, employment levels, foreign exchange earnings, per capita incomes and nutrition levels, and industrial good consumption levels. The planner can explore the impact of alternative development strategies upon these outputs. Major policy variables (from the user's standpoint) included are various modernization programs for the five production activities, marketing board producer price policies for groundnuts and cotton, and taxation policies.

A key component affecting the behavior of the model[3] (and its ability to simulate real world behavior) is the land, labor allocation box in Figure 4. To summarize the equations, the total arable land in the four subregions is determined by available labor, cash returns to labor, the proportion of the population active in the cash market, and a mechanization (or labor efficiency) coefficient. Given total arable land, land available for cash crops is computed as a residual after subsistence food needs have been provided.[4] The land allocation mechanism then allocates this residual to the viable alternatives in each of the four subregions on the basis of cash returns per unit of labor, the most restrictive resource. The model includes behavioral and production lags which provide for a smooth transition of allocatable land to the most profitable option available in each subregion. The land allocation mechanism described determines the supply response and the Northern producers' adjustment to changes in crop price and profit expectations. Since groundnut and cotton prices are established by Nigerian marketing boards, only cash food prices are determined endogenously in the model through the interaction of supply and demand. Demand for cash food in the model is determined as a function of nonfarm income (assumed an exogenous variable at the present time), nonfarm population, and food prices. Nonfarm population and food prices are generated endogenously by the model.

The model incorporates a modernization component that can be used to evaluate the introduction of improved inputs or management practices to one or more of the crop components. The modernization component is a general purpose subroutine which is called whenever a budget allocation has been made to stimulate the modernization of one or more crops. Modernization proceeds at a rate directly related to the level of profitability for the producer. This component also includes an innovation diffusion mechanism which allows for spontaneous (farmer to farmer) diffusion of modern techniques occurring over time if necessary inputs, information requirements, etc. are available. The major outputs of the modernization component are changes in the average crop yields which currently are deterministic rather than probabilistic (i.e., weather influence is ignored) in the model.

Model Refinement and Testing

Up to this point, we have used our theoretical and institutional understanding of the Nigerian economy to specify the major components or building blocks of the system and to initially specify the technological relationships, behavioral interrelationships, cultural and institutional constraints which might be manipulated by policy makers. In so doing, we have (1) specified the structural interrelationships, (2) determined the important instrumental variables, (3) determined the directions of causation, (4) specified functional forms of the technological or behavioral relationships that seemed to fit the current and potential situations envisioned, and (5) tentatively specified the parameters and, thus, the shape of functional relations. Our sources of information and data included CSNRD research, researchers and other professional personnel in the field, secondary data and previous research results. The information was utilized in initially approximating the parameters

[2] The beef production activity was the first component developed by the Michigan State Research Team. It is reported elsewhere [14, 20].

[3] Equations are available from authors upon request.

[4] This describes the present behavioral situation in Northern Nigeria, but the model has the flexibility to allow cash food to replace subsistence food needs if socio-economic conditions change.

and relationships in the components that we had completed. By computer simulation, we then checked the consistency of the various structural relationships and parameter values and made corrections in gross errors.

A procedure (illustrated below) known as "sensitivity analysis" tested the impact of changes in model parameters upon model behavior. These tests served at least two functions. They indicated what data were most important in affecting model behavior, thereby helping to establish priorities for additional data gathering activities. A second useful outcome of sensitivity analysis was identification of programs and policies which might significantly improve the performance of the system.

Those parameters which appear to be more sensitive will be investigated. The investigation may indicate that we need to instigate a special study or wait for new sources of information or for field surveys to become available. Alternatively, we may verify the reasonableness of the estimates by checking with experts or with data not previously utilized to establish the original parameters.

Preliminary Tests of the Northern Model

The major components of the system were modeled, simulated, and tested individually as part of the overall model building process. During these tests, conceptual and programming errors were detected and corrected until the component appeared credible and ready for inclusion in larger models. The components were then integrated into the Northern regional model shown in Figure 3. Extensive model tests were continued within the context of the larger model to eliminate programming errors and inconsistencies between related model components. This refinement process led to a model which was deemed ready for preliminary comparison with time series data generated by the Northern Nigerian economy.

These initial comparisons served a number of purposes:

(1) They led to additional structural and parameter changes in the model which made it behave more realistically.

(2) They helped identify the model parameters which have the greatest impact on the performance of the economy as measured by such variables as income, foreign exchange earnings, value added, and so forth.

(3) They provided guidance in determining priorities for future data gathering activities.

Essentially, the model (which at this time contains only "ball park" parameter estimates for the most part) was given farmer prices for groundnuts and cotton over the period 1953–1965. Since these prices were determined largely by world prices and/or marketing board policies, they can be considered exogenously determined. The model then simulated this 13-year period, generating annual groundnut production, cotton production, and an aggregate cash food price index for Northern Nigeria. The sum-of-squared errors between the simulated data and actual data were then calculated and aggregated. The following equations define this measure of model performance:

$$TSS = TSS_g + TSS_c + TSS_f$$

where:

TSS = total sum of squared deviations of the model results from actual data.

TSS_g, TSS_c, TSS_f = total sum of squared deviations of groundnut, cotton, and food series, respectively.

The individual squared deviations, TSS_g, TSS_c, and TSS_f, are computed as follows:

$$TSS_i = \sum_{j=1}^{13} \left[\frac{X_{ij} - \hat{X}_{ij}}{\overline{X}_i}\right]^2$$

where:

X_{ij} = real world observation in year j.

$\overline{X}_i = \sum_{j=1}^{13} \frac{X_{ij}}{13}$ — the mean of real world observations.

$\hat{X}_{ij}$ = the simulated value of the ith time series in year j.

Division by the mean $\overline{X}_i$ in this equation normalizes the errors of each time series so they carry approximately equal weight in the overall measure of fit, TSS.

Given the performance measure TSS, the model was further refined and "uncertain" parameters were adjusted within the likely range of actual values until it roughly tracked real world data and produced a "respectable"[5] value for TSS. It was disturbing to note that the model

[5] As seen from the defining equation, perfect tracking would correspond to a TSS value or zero. If the model produced zero outputs, TSS would be approximately 39.

Table 1. Selected results of Northern model sensitivity tests

Run number	Run description	Base value of varied parameter	*CFICNA* (£×10⁹)	*FOREXNA* (£×10⁶)	*CFIPC* (£)	*TSS*	TSS_f	TSS_g	TSS_c
1	Base run		1.890	9.228	8.29	1.887	.200	.828	.859
2	$APLO_1$ ↑ by 20%	6.0	2.026	172.7	8.57	4.896	.200	3.837	.859
3	$APLO_2$ ↑ by 20%	6.0	1.945	87.00	8.44	7.463	.200	.827	6.436
4	EAP(1) ↑ by 20%	.750	1.922	45.42	8.32	2.369	.200	1.309	.859
5	EAP(2) ↑ by 20%	.5	1.895	15.29	8.29	2.122	.200	.828	1.095
6	B(1, 1) ↑ by 20%	1.0	1.890	9.228	8.29	1.887	.200	.828	.859
7	B(1, 4) ↑ by 20%	1.0	1.891	9.309	8.29	1.872	.185	.828	.860
8	B(2, 1) ↑ by 20%	.5	1.886	3.189	8.26	1.893	.200	.834	.859
9	CL5 ↑ by 20%	1.0	1.893	9.179	8.28	1.892	.206	.828	.858
10	P4(1) ↑ by 20%	700 pounds per acre	1.989	130.3	8.51	3.699	.200	2.639	.859
11	P4(2) ↑ by 20%	260 pounds per acre	1.921	52.72	8.37	4.438	.200	.828	3.410
12	P4(3) ↑ by 20%	700 pounds per acre	2.007	156.7	8.54	5.452	.200	2.428	2.825
13	P4(4) ↑ by 20%	5320 pounds per acre	1.890	8.386	8.25	1.949	.248	.828	.874

could be made to look respectable in a number of different ways—some of them clearly unrealistic. Given more (than three) real world time series for comparison with the model, it would be more difficult to get a good model fit and this problem would be eased. The model was finally roughly tuned on the basis of the most reasonable and consistent set of underlying assumptions. Using the results of this procedure as a "base" run, a series of "sensitivity" runs of the model were made in which individual model parameters were varied by 20 percent. Some of the more important results of these sensitivity runs are shown in Table 1.

The first run in Table 1 provides a standard against which subsequent runs can be evaluated. In runs 2-13 the parameter listed in column 2 (and only that parameter) is changed by 20 percent and the impact upon measures of system behavior noted. In addition to a tabulation of values of *TSS*, TSS_f, TSS_c and TSS_g, which are measures of how well the model fits data from the Northern Nigeria economy, Table 1 includes a number of economic measures which provide an indication of how important variations in any given parameter are in determining the performance of the economy. These are defined as follows:

CFICNA = cash farm income from crops in Northern Nigeria accumulated over a 20-year simulation run—billions of Nigerian pounds.

FOREXNA = foreign exchange earnings from crops and beef in Northern Nigeria accumulated over a 20-year simulation run—millions of pounds.

CFIPC = cash farm income per capita in the rural economy of Northern Nigeria—pounds per person.

In all, 12 separate parameters are tested for sensitivity in Table 1. These are defined as follows:

$APLO_1$ = cultivated acres per equivalent man unit in region 1 (groundnut-food) with traditional mechanization and normal prices.

$APLO_2$ = same as above, for region 2 (cotton-food).

EAP(1) = percent of rural population that is economically active in Region 1 (groundnut-food) at the beginning of the simulation run (1953).

EAP(2) = percent of rural population that is economically active in region 2 (cotton-food) at the beginning of the simulation run (1953).

B(1,1) = profitability elasticity for groundnuts when profitability index (PF_1) is greater than one.

B(1,4) = profitability elasticity for food in region 4 when profitability index (PF_4) is greater than one.

B(2,1) = profitability elasticity for groundnuts when profitability index (PF_1) is less than one.

CL5 = a parameter that controls the rate of food price adjustment in response to differences between supply and demand.

*P*4(1), *P*4(2), *P*4(3), *P*4(4) = the productivities in yield per acre in the farm subregions of the northern model.

The runs tabulated are by no means exhaustive. Much more of this kind of testing needs to be done. The runs shown illustrate what can be learned from sensitivity analysis.

From runs 2–5 it is seen that variables such as acres cultivated per unit of labor and indices of economic activity are quite important in deter-

mining the performance of the model. This suggests that effort directed at obtaining better estimates of these parameters might substantially improve model accuracy. In fact, comparison of runs 2–5 with runs 6–8 suggests that labor utilization and economic activity parameters might be more important in determining system behavior than parameters which measure the impact of expected profitabilities upon subsequent enterprise selection decisions.

In run 9, the food price adjustment parameter CL5 was examined for sensitivity and found to have a relatively weak influence upon model behavior. This suggests that data gathering efforts might be more profitably directed elsewhere.

Perhaps the most interesting simulation results contained in the table are those of runs 10–13. In these runs, it was assumed that yields per acre were increased by 20 percent for each of the four major cropping activities of Northern Nigeria. Run 10 (increased groundnut yield) showed significant increases in foreign exchange earnings and farm income. In run 11, the impact of a corresponding increase in cotton yield was less significant due to the smaller scale of cotton production.

In run 12, a 20 percent increase in the yield of food (mainly grains) grown *in competition with groundnuts and cotton* was postulated. The impact on foreign exchange earnings and farm income was greater than when either groundnut or cotton yields were increased by the same proportion. The increased food yields allowed farmers to release land and labor from food crops. Because of the very large acreage of food crops, the acreage and outputs of groundnuts and cotton increased more as substantial land and labor resources were freed from subsistence food crop production. These results focus attention on an important question: Should extension and research programs give more emphasis to food crops grown in competition with export crops such as groundnuts and cotton? In some situations, this might be preferable to aiming these resources directly at the export and import substitute commodities.

In run 13, the yield of food in the food-only zone was increased by 20 percent. Food prices were lowered and the impact on farm income and exchange earnings was neutral under the demand conditions currently specified in the region.

The tests described above represent a beginning. Much more testing is planned for the Northern model, including activation of the modernization components and exploration of alternative budget allocations.

Model Validation

Once a model has undergone preliminary tests, attention turns to questions of validity.[6] Validation of a complex simulation model is by no means an easy task but certainly is of key importance if a model is to be used for decision making. If the model describes an existing system, it is sometimes possible to rigorously compare the behavior of the model with the past behavior of the real world system and thereby gain insight into model validity. Prediction is, of course, an even better way to test a model—how well does the model predict how the real system is *going* to behave? Both these methods require considerable quantities of real world data which may be difficult or costly to acquire. The latter method involves a waiting period that may be intolerable in the situation at hand.

If the purpose of the model is to help plan a system that doesn't exist, the problem of validation can be even more formidable. In this case validation hinges on the laws, assumptions, and logic embedded in the model and can be viewed as "validation by deduction." It's encouraging to note here that models *have* been useful in the design of new systems in many areas of activity. In any event, a simulation is *always* an approximation of reality. The question that must be answered is: Is the model an acceptable approximation?

In many cases, it would seem, a pragmatic approach to the question of validation has been taken. People who are thoroughly acquainted with the way the real world behaves in the given problem situation can develop a "feel" for how well a model performs and to what extent they can allow it to enlarge their thinking and influence their decisions. In many situations, decision makers are forced to make important decisions on the basis of limited and perhaps questionable information. Can *better* decisions be made using a simulation? Are the decisions improved sufficiently to warrant the cost of simulation?

Model Applications

At this point we assume that the simulation model has been refined, tested, and judged to be

[6] The subject of model validation and the design of experiments to test for sensitivity and validity of model components has been examined more exhaustively by Naylor and others [27].

credible in its representation of reality. What is its potential usefulness to decision makers?

A common use of a model is to provide the decision maker with a laboratory for exploring the consequences of a wide range of alternative plans or management strategies. The decision maker has complete freedom to weight heavily only those benefits and costs that he considers important. In this mode of operation there must be close interaction between decision makers, systems analysts, and computer specialists, as again the process is iterative in nature. One simulation experiment can lead to the creative design of a new and better one which may involve reprogramming or even basic modifications of the model. A set of development strategies which are consistent and mutually reinforcing can be developed and, thus, a more effective use of resources should be more readily achieved.

With current technology, simulation models can also be used in an optimization mode [33]. This approach presupposes some single criterion such as cost, profit, discounted present value, etc. to be maximized or minimized. In this mode the model is programmed to automatically search for the plans or policies which optimize the selected criterion. In many cases, one objective function may not be definable, or stable over time. Consequently, the multiple objective approach currently utilized in our model may be more useful, since it is sufficiently flexible to be compatible with both different agencies and changes in goals as development progresses.

Due to the dynamic nature of system management, simulation models are often used on a more or less continuous basis through time. This implies periodic updating of input information and reevaluation of development strategies. Implicit in this is the monitoring of the real world behavior and using this information to keep the model realistic and credible to the decision maker's clientele.

Planning Capability

A computer simulation model of an economic system can have some conspicuous advantages for policy makers. It can serve as a means to experiment with and comprehensively analyze the complex relationships affecting the potential results of various policy alternatives. Undesirable economic situations or consequences can thus be foreseen and avoided. A simulation model can be a substantial assist in designing development plans if the major mechanisms constraining or accelerating development are adequately approximated within the model. However, a substantial research investment may be necessary to adequately design and build a credible simulator. Substantial information reservoirs and research investigations are usually necessary in developing a reasonably complex and useful simulation model for regional or national development planning.

Current limiting resources in building realistic simulators for developing economies appear to be (1) the amount and breadth of applicable descriptive information available about the interrelationships within the economy and (2) trained personnel.

Trained personnel, in combination with access to a large computer must be available to build and continually update the functional relationships within the model, to specify the possible impacts of new policies upon model structure and parameters, and to interpret the results of model experimentation for the decision maker.

For Nigeria, there was substantial descriptive information about the agricultural economy which was appropriate for fitting the functional interrelationships in the simulation model. However, much previous research and secondary data only related tangentially to our specific requirements. The behavioral dynamics of the system were probably the greatest single aspect of the model where initial approximations were most difficult. Here our resource personnel with Nigerian experience proved invaluable. Our current model and those which will follow in the coming year must be considered tentative and subject to revision in the light of new research findings and criticism from knowledgeable people. We recognize that the process of simulation model building and testing is iterative and that our work is only a stepping stone to an operational planning model. However, at each incremental step one must ask whether the benefits of increased model realism surpass the costs of data acquisition and greater modeling efforts.

A broader issue involves interpreting and implementing the results from simulation. Even with the best model that can be formulated from existing data, it must be pointed out that knowledge about an economic system is not at the same level as that known about most physical systems. The fact that results come from a computer certainly does not make them divine revelations or make them any more valid than the basic information inputs and perceived interrelationships determining the results. Also, we emphasize economic results of various development

plans without specifying social and political implications. In actual implementation, each alternative and the associated economic results would have to be examined in more depth to provide an evaluation of their social and political consequences. We have not attempted to specify which politician or political group may be detrimentally affected if a technological change is promoted or what the political consequences may be with further governmental intervention in price determination. However, the likely economic opportunity costs associated with various alternatives may be useful information in the actual policy maker's decision process.

Summary

The systems analysis approach to development planning provides a comprehensive view of a complex system. A simulation model can incorporate the most important mechanisms and the best available information within an economy to provide a readily available means of experimentation for various development policies. Information gaps can be spotlighted and research priorities can be more readily evaluated. In so doing, better-informed planning can be facilitated. Further, development bottlenecks can be diagnosed and policies tailored to alleviate problem situations. While no comprehensive simulation model of a national economy has yet been fully implemented and tested, it appears that the benefits involved include: (1) a clearer understanding of the important components and interactions within the economy and potential accelerators or constraints to development, (2) acquisition of relevant information in an "instant recall" model, and (3) a diagnostic tool which can point out likely undesirable economic results before policies are implemented. A simulation planning model tentatively seems to be a useful introduction of new technology into development planning where a substantial research and data base is available.

References

[1] CANDLER, WILFRED, AND WAYNE CARTWRIGHT, "Estimation of Performance Functions for Budgeting and Simulation Studies," *Am. J. Agr. Econ.* 51:159–169, Feb. 1969.

[2] CARROLL, T. W., *Simulation of the Diffusion of Agricultural Innovations in Rural Communities of Transitional Societies*, unpublished Ph.D. thesis, Massachusetts Institute of Technology, 1968.

[3] FORRESTER, J. W., *Industrial Dynamics*, New York, John Wiley & Sons, 1961.

[4] HALL, A. D., *A Methodology for Systems Engineering*, Princeton, Van Nostrand, 1962.

[5] HALTER, A. N., AND S. F. MILLER, *River Basin Planning—A Simulation Approach*, Oregon Agr. Exp. Sta. Spec. Rep. 224, Nov. 1966.

[6] HALTER, A. N., AND G. W. DEAN, *Simulation of a California Range-Feedlot Operation*, University of California, Giannini Foundation Res. Rep. 282, May 1965

[7] HAYENGA, M. L., T. J. MANETSCH, AND A. N. HALTER, "Computer Simulation as a Planning Tool in Developing Economies," *Am. J. Agr. Econ.* 50:1755–1759, Dec. 1968.

[8] HELLEINER, GERALD K., *Peasant Agriculture, Government, and Economic Growth in Nigeria*, Homewood, Illinois, Richard D. Irwin, Inc., 1966.

[9] HOLLAND, E. P., "Simulation of an Economy with Development and Trade Problems," *Am. Econ. Rev.* 52:408–430, June 1962.

[10] HOLLAND, E. P. AND ROBERT W. GELLESPIE, *Experiments on a Simulated Underdeveloped Economy: Development Plans and Balance-of-Payments Policies*, Cambridge, MIT Press, 1963.

[11] HOLLAND, EDWARD P., "Principles of Simulation," in *The Challenge of Development: Theory and Pracitice*, ed. Richard J. Ward, Chicago, Aldine Publishing Company, 1967.

[12] JOHNSON, GLENN L., "Quantitative Problems in the Simulation of the Nigerian Agricultural Economy," Michigan State University, Oct. 1966, mimeo.

[13] JOHNSON, GLENN L., "Evaluation and Development of Analytical Models for Rural Development," Michigan State University, 1967, mimeo.

[14] JOHNSON, G. L., et al., "A Simulation Model of the Nigerian Agricultural Economy: Phase I," The Northern Nigerian Beef Industry, Progress Report submitted to the Agency for International Development, April 1968.

[15] JOHNSON, GLENN L., et al., "Strategies and Recommendations for Nigerian Rural Development, 1969–1985," CSNRD 33, Michigan State University, 1969.

[16] KRESGE, DAVID T., "A Simulation Model for Economic Planning. A Pakistan Example," Economic Development Report 81, Development Advisory Service, Harvard University, 1967, mimeo.

[17] LIGOMENIDES, P. A., T. J. MANETSCH, AND F. A. RAMOS, "On the Use of Computer Simulation Models in Planning Development in Northeast Brazil," August, 1967, mimeo.

[18] LLEWELLYN, R. L., "FORDYN, an Industrial Dynamics Simulator," Department of Industrial Engineering, University of North Carolina, Raleigh, 1966.

[19] MCMILLAN, A. AND R. F. GONZALES, *Systems-Analysis—A Computer Approach to Decision Models*, Homewood, Illinois, Richard D. Irwin, Inc., 1968.

[20] MANETSCH, T. J., M. L. HAYENGA, AND A. N. HALTER. "A Simulation Model of the Nigerian Beef Industry," Michigan State University, 1968, mimeo.

[21] MANETSCH, T. J., "The United States Plywood—A Systems Study," in *IEEE Transactions of Systems Science and Cybernetics*, Nov. 1967.

[22] MANETSCH, T. J., F. A. RAMOS, AND S. C. LENCHNER, "Simulation of a Program for Modernizing

Cotton Production in Northeast Brazil—Working Paper Number Three," Division of Engineering Research, Michigan State University, Aug. 1968.

[23] Ministry of Economic Planning, *Development Plan, 1962–1968,* Kaduna, Northern Nigeria, 1964.

[24] Simulatics Corporation, *Dynamic Models for Simulating the Venezuelan Economy,* Centro de Estudios del Desarrollo (CENDES), Universidad Central de Venezuela, Sept. 1966.

[25] NAYLOR, T. H., et al., *Computer Simulation Techniques,* New York, John Wiley & Sons, 1966.

[26] NAYLOR, THOMAS H., AND J. M. FINGER, "Verification of Computer Simulation Models," *Mgt. Sci.* 14:92–101, Oct. 1967.

[27] NAYLOR, THOMAS H., DONALD S. BURDICK, AND W. EARL SASSER, "Computer Simulation Experiments with Economic Systems: The Problem of Experimental Design," *J. Am. Stat. Assoc.* 62:1315–1337, Dec. 1967.

[28] NAYLOR, THOMAS H., "Bibliography 19, Simulation and Gaming," *Computing Reviews,* Jan. 1969.

[29] ORCUTT, G. H., M. GREENBERGER, et al., *Microanalysis of Socio-Economic Systems,* New York, Harpers, 1961.

[30] Pontificia Academia Scientiarum, *The Econometric Approach to Development Planning,* Amsterdam, North-Holland Publishing Co., 1965.

[31] PUGH, A. L., "DYNAMO User's Manual," Cambridge, MIT Press, 1963.

[32] United Nations Food and Agriculture Organization, *Agricultural Development in Nigeria,* 1965–1980, Rome, 1966.

[33] WILDE, D. J., AND C. S. BEIGHTLER, *Foundations of Optimisation,* New York, Prentice-Hall, 1967.

Reprinted from
AMERICAN JOURNAL OF AGRICULTURAL ECONOMICS
Vol. 52, No. 2, May, 1970

Policy Simulation Experiments with Macroeconometric Models: The State of the Art

THOMAS H. NAYLOR

IN recent years economists have made increasing use of policy simulation experiments with macroeconometric models to evaluate the effects of alternative economic policies on the behavior of the economy of an entire country. Although econometricians have devoted considerable time and effort to the solution of a multiplicity of problems related to the estimation of the parameters of econometric models, they have almost totally ignored some relatively serious methodological problems associated with policy simulation experiments with given econometric models. But some very real methodological problems do exist when one attempts to design and implement a simulation experiment with a large-scale, macroeconometric model. What are some of these problems? What are the possible consequences of ignoring these problems? What alternatives are available for circumventing these problems? In this paper we shall attempt to answer some of these questions.

Definition of the Policy Problem

Three alternative approaches have been proposed by economists for using macroeconometric models to evaluate the effects of alternative economic policies on the behavior of an economic system: (1) the Theil approach, (2) the Tinbergen approach, and (3) the policy simulation approach. Each approach assumes that we begin with a given econometric model of the economy to be investigated. That is, it is assumed that the economy of the country in question can be described by a set of simultaneous equations of the following form:[1]

$$(1) \quad AX_t+BY_t+\sum_{j=1}^{p} B_jY_{t-j}+CZ_t+D=U_t$$

where

X_t = an $m\times 1$ vector of exogenous variables
Y_t = an $n\times 1$ vector of endogenous variables
Y_{t-j} = an $n\times 1$ vector of lagged endogenous variables when $j=1, \ldots, p$
Z_t = $aq\times 1$ vector of policy instruments
U_t = an $n\times 1$ vector of stochastic disturbance terms
A, B, C, D = coefficient matrices whose parameters have been estimated by standard econometric techniques.

Theil approach [15]

Theil assumes that we know the social welfare function W of the policy maker and that it may be expressed as a function of the target (endogenous) variables and the policy instruments:

$$(2) \quad W_t = W_t\,(Y_t, Z_t).$$

The problem of the policy maker is defined as one of finding the values of Y_t and Z_t that will

THOMAS H. NAYLOR *is visiting professor of business and economics at the University of Wisconsin, on leave from Duke University.*

[1] Of course, the model may also be nonlinear.

maximize W_t subject to the constraints imposed by the econometric model (1) and given values of X_t, Y_{t-j}, and U_t.

This approach suffers from one major shortcoming, namely, that in the real world we simply do not know the parameters or even the functional form of W_t for governmental policy makers. The von Neumann-Morgenstern utility index and other techniques that have been proposed by economists for quantifying utility simply require too much information in order to obtain meaningful results—information that is not likely to be forthcoming from either present or future policy makers on the national, state, or local governmental levels. A policy maker whose principal concern is his own political survival is not going to reveal his utility function to you or me or any other economist.

Fromm [17, 19] and Shupp [43] have proposed several examples of hypothetical utility functions for national policy makers. While these exercises may be of some interest to academic economists, they are not likely to do much for real world policy makers.

In summary, the Theil approach to the evaluation of economic policies with macroeconometric models is little more than an interesting exercise which offers only limited promise as a policy-making tool. Economists would do well to spend less time trying to specify the social welfare functions of policy makers and spend more time seeking solutions to some of the problems of policy makers.

Tinbergen approach [15]

With the Tinbergen approach no knowledge of the policy maker's welfare function is assumed. This approach eliminates the maximization problem and instead assumes that the policy maker has specified a fixed target value for each of the endogenous variables. For given values of the exogenous, lagged endogenous, and stochastic variables, the equations of the econometric model (1) are then solved simultaneously for the set of values of the policy variables Z_t that is consistent with the targets.

If there are fewer policy variables than targets, the number of unknowns (policy instruments) in the econometric model (1) is smaller than the number of equations, and a solution is impossible except for special cases. On the other hand, if the number of policy instruments exceeds the number of targets, the number of unknowns will exceed the number of equations, and an infinite number of solutions will be possible. Within the Tinbergen framework the first of these two problems can be resolved only by either increasing the number of policy instruments or reducing the number of target variables until there is an equal number of equations and unknowns in the system. When there are more policy instruments than equations, the policy maker can assign arbitrary values to $q - n$ of the policy variables, and the equation system can be solved for the remaining n policy variables.

Although the problem of balancing the number of equations and the number of policy variables may prove to be a serious limitation of the Tinbergen approach, there is, in my opinion, another problem which is even more serious. The assumption that in a country like the United States a policy maker is willing to commit himself to a specific set of target values for the endogenous variables is highly questionable.[2] Just as the policy maker is unlikely to provide the economist with enough information to glean his utility function, it is doubtful that the policy maker will reveal in a very precise manner the values of his targets. A methodology based on information (e.g., values of target variables) that is simply not available to the analyst cannot be expected to yield results that are particularly useful to the policy maker.

Policy simulation approach

There is yet a third approach to the problem of evaluating the effects of alternative economic policies on the behavior of the economy which does not assume prior knowledge of either the social welfare function or the targets of the policy maker. This approach is known in the literature as simulation. With simulation we can solve the set of simultaneous equations given by (1) for Y_t in terms of X_t, Y_{t-j}, Z_t, and U_t and generate the time path of Y_t for as long a period as we desire. The exogenous variables X_t are read into the computer as data, the values of Y_{t-j} were generated in previous periods and are fed back into the model in period t, the policy variables are specified by the analyst, and the stochastic disturbances may either be suppressed or generated by an appropriate computer subroutine [38]. In the case of a linear econometric model, the solution

[2] Admittedly, in a country like Holland or India, where economic planning is a generally accepted way of life, economic planners and policy makers may be willing to specify target values for the endogenous variables. But can you imagine a state legislator or even a U.S. congressman in this country being willing to specify a set of policy targets?

of the econometric model takes the following form:

$$Y_t = -B^{-1}AX_t - B^{-1}\sum_{j=1}^{p} B_j Y_{t-j} - B^{-1}CZ_t - B^{-1}D + B^{-1}U_t \tag{3}$$

where B^{-1} is the inverse of B. Since it is possible to invert very large matrices on today's digital computers in only a few seconds, it is relatively easy to generate the time paths of Y_t for linear models through the use of computer simulation techniques.

Therefore, for any given values of the policy instruments, we can generate the time paths of the endogenous variables. In other words, when we approach the policy maker we ask him only two questions. First, "What output variables are of particular interest to you?" Second, "What sets of policy variables appear to be politically feasible?" With simulation we can then show the policy maker the consequences of the proposed policies. In addition, the economist may propose a few policies of his own for consideration by the policy maker. These policies may be put to a similar test. The policy maker then selects the policies that are most compatible with his preference function (which is unknown to the economist). The results of initial simulation runs may suggest other policy variable configurations to try.

There are two advantages of the policy simulation approach. First, it does not assume the availability of information about the policy maker's preferences that is impossible to obtain. Second, it provides the policy maker with the type of information that he is most likely to require in order to make decisions. In summary, while the Theil-Tinbergen approaches may be of considerable interest to economists from a purely theoretical standpoint, neither of these approaches provides operational solutions to policy problems. Therefore, policy simulation experiments may represent the only methodology currently available for obtaining practical solutions to real world policy problems.

We now turn our attention to several methodological problems associated with policy simulation experiments with macroeconometric models.

Solution of the Model

If our econometric model is linear, the solution is quite straightforward and is given by (3). Unfortunately, realistic econometric models are seldom linear. One example of nonlinearity which arises frequently in econometric models is the use of price times quantity terms in the identity defining gross national product in current prices. The Wharton model [10, 13] contains several other examples of nonlinearities, including: (1) relative prices in the consumption functions; (2) logarithmic treatment of the production function; (3) nonlinearity of the wage rate and capacity term in some of the price formation equations.

With the rediscovery by economists of the Gauss-Seidel method for solving systems of simultaneous nonlinear equations, nonlinearity no longer represents a serious computational problem. The paper by Evans [10] and the book by Klein and Evans [31] provide complete descriptions of the Gauss-Seidel method. Although the convergence of this algorithm is influenced by (1) the type of normalization procedure used and (2) the ordering of the equations, practical experience with the algorithm indicates that convergence is usually not a problem.

In addition to the Gauss-Seidel method for solving nonlinear econometric models, Charles Holt and others [25] have developed a special purpose simulation language called PROGRAM SIMULATE for generating the time paths of the endogenous variables of linear and nonlinear econometric models.

For the sake of completeness, we should mention two other computational problems associated with the generation of the time paths of the endogenous variables of an econometric model with computer simulation techniques.

First, Goldberger [22] has shown that when serial correlation is present in the error terms of an econometric model, the pattern of equation residuals over prior observations contains information that is useful in prediction. Through certain mechanical procedures that utilize information about the serial correlation in the observed residuals, it is possible to adjust the constant terms of regression equations and improve the predictive efficiency of the equations. Green [23] has reported on the results of using four different mechanical adjustment procedures in simulation experiments with the OBE model.

Second, with stochastic simulations with econometric models we frequently assume that the disturbance terms in (1) have a multivariate normal distribution with expected value of zero and a given variance-covariance matrix which has been estimated from the observed values of the residuals of the model. Provided the number of observations available to estimate the variance-covariance matrix is not less than the num-

ber of equations, the technique for generating random variables with a multivariate normal distribution described in [38] is appropriate. However, if the number of observations is less than the number of equations, this technique breaks down and one of the procedures proposed by Nagar [36] and McCarthy [14, Appendix] will be required.

Validation

The validity of an econometric model depends on the ability of the model to predict the behavior of the actual economic system on which the model is based. In order to test the degree to which data generated by simulation experiments with econometric models conform to observed data, two alternatives are available—historical verification and verification by forecasting. The essence of these procedures is prediction, for *historical verification* is concerned with retrospective predictions (ex post simulations over the sample period) while *forecasting* is concerned with prospective predictions (ex ante simulations beyond the sample period). In the paper by Naylor and Finger [40] several criteria are suggested for deciding when the time paths generated by a simulation experiment agree sufficiently with the observed time paths so that agreement cannot be attributed merely to chance. Several specific measures and techniques are suggested for testing the "goodness-of-fit" of simulation results, i.e., the degree of conformity of simulated series to observed data.

Two recent studies by Cooper [5] and Stekler [44, 45] have attempted to evaluate the predictive behavior of several of the large-scale quarterly econometric models of the economy of the United States. Cooper uses the mean-squared error as a goodness-of-fit criterion and Stekler uses the Theil inequality coefficient. Cooper concluded:

> First, no single quarterly econometric model currently available is overwhelming superior to all other quarterly models in predicting the components of the national income and product accounts. Second, the econometric models are not, in general, superior to purely mechanical methods of forecasting. However, there are modules of the econometric models which are definitely superior to purely mechanical models. Third, the econometric models are, in general, structurally unstable [5, p. 151].

Stekler [45, p. 463] concluded that "the results suggest that econometric models have not been entirely successful in forecasting economic activity." Cooper's study examined the predictive performance of seven different models while Stekler considered only six models. Both studies included earlier versions of the OBE [33] and Wharton [13] models, but neither study treated the Brookings model [8] or the FRB-MIT-PENN model [4].

Experimental Design

In a computer simulation experiment, as in any experiment, careful thought should be given to the problem of experimental design. Among the important considerations in the design of computer simulation experiments are: (1) factor selection, (2) randomization, (3) number of replications, (4) length of simulation runs, and (5) multiple responses.

Factor selection

In the language of experimental design, the policy variables in our model are usually called *factors* and the endogenous variables are known as *response* variables. A *full factorial* design involves selecting several values or levels for each of the factors (policy variables) in the experiment. By assigning to each factor one of its levels, we generate a design point. If all the design points obtainable in this way are used, we have a full factorial design. The total number of design points in the full factorial design is the product of the number of levels for each factor. It is clear that a full factorial design can require an unmanageably large number of design points if more than a very few factors are to be investigated. If we require a complete investigation of all the factors in the experiment, including main effects and interactions of all orders, there is no solution to the problem of "too many factors." If, however, we are willing to settle for a less than complete investigation, perhaps including main effects and two-factor interactions, there are designs which will accomplish our purpose that require fewer design points than the full factorial. Fractional factorial designs, including Latin square and Greco-Latin square designs, are examples of designs that require only a fraction of the design points required by the full factorial design. The papers by Hunter and Naylor [37] and Naylor, Burdick, and Sasser [39] describe various experimental designs which may be useful with policy simulation experiments with macroeconometric models.

Randomization

There are at least three reasons why one might want to include stochastic disturbance terms in simulation experiments with nonlinear macro-

econometric models. First, as Phil Howrey has pointed out in an unpublished paper entitled "Dynamic Properties of Stochastic Linear Econometric Models," if the long-term properties of an econometric model are to be investigated,

> . . . it may not be reasonable to disregard the impact of the disturbance terms on the time paths of the endogenous variables. Neither the characteristic roots nor the dynamic multipliers provide information about the magnitude or correlation properties of deviations from the expected value of the time path.

Second, Howrey and Kelejian [27] have demonstrated that "the application of nonstochastic simulation procedures to econometric models that contain nonlinearities in the endogenous variables yields results that are not consistent with the properties of the reduced form of the model." Third, by including stochastic error terms, one can replicate the simulation experiment and make statistical inferences and test hypotheses about the behavior of the system being simulated, based on the output data generated by the simulation experiment.

Number of replications

If one is to make inferences about the effects of alternative economic policies on the behavior of an economic system based on a computer simulation experiment, the question of sample size or the number of replications of the experiment should be considered. It is well known that the optimal sample size (number of replications) depends on the answers one gives to the following questions: (1) How large a shift in population parameters do you wish to detect? (2) How much variability is present in the population? (3) What size risks are you willing to take?

Unfortunately, econometricians have tended to ignore the question of optimal sample size and to select some arbitrary number of replications for stochastic simulations with econometric models. Nagar [36], for example, used twenty replications with his stochastic simulations with the Brookings model. In more recent simulations with the Brookings [18], OBE [23], and Wharton [14] models, fifty replications were used. In none of these cases was any rationale provided for the arbitrary sample size.

The paper by Gilman [21] describes several rules for determining the number of replications of a simulation experiment when the observations are independent. (Observations obtained by replicating a simulation experiment will be independent, provided one uses a random number generator that yields independent random numbers.)

Length of simulations runs

Another consideration in the design of simulation experiments is the length of a given simulation run. This problem is more complicated than the question of the number of replications because the observations generated by a given simulation rule will typically be autocorrelated, and the application of "stopping rules" based on classical statistical techniques may underestimate the variance substantially and lead to incorrect inferences about the behavior of the system being simulated.

> In the large majority of current simulations, the required sample record length is guessed at by using some rule such as "Stop sampling when the parameter to be estimated does not change in the second decimal place when 1000 more samples are taken." The analyst must realize that makeshift rules such as this are very dangerous, since he may be dealing with a parameter whose sample values converge to a steady state solution very slowly. Indeed, his estimate may be several hundred percent in error. Therefore, it is necessary that adequate stopping rules be used in all simulations [21, p. 1].

To the best of my knowledge, econometricians have not even acknowledged that the length of the simulation run might be a relevant consideration in the design of a policy simulation experiment. Gilman [21] has described several "stopping rules" for determining the length of simulation runs with autocorrelated output data. Ling [37] has also treated this problem.

Multiple responses

The multiple response problem arises when we wish to observe and evaluate many different response variables in a given simulation experiment. We previously alluded to this problem in our discussion of the Theil-Tinbergen approaches to the theory of quantitative economic policy. The multiple response problem is particularly acute with the Brookings, OBE, and Wharton models, each of which has over fifty response variables. A question arises as to how one goes about validating multiple response simulation experiments and how one evaluates the results of the use of alternative policies in the case of policy simulation experiments. To solve the multiple response problem, the analyst must devise some technique for assigning weights to the different response variables before applying specific statistical tests. Fromm [17, 19] has proposed the use of utility theory to evaluate the results of policy simulation experiments with the Brookings model. The approach taken by most econometri-

cians to the multiple response problem is to present the results of their experiments and let the policy maker assign his own weights to the different response variables. Given the practical and theoretical problems involved in assigning weights or utilities to different response variables, this approach is likely to prevail in the near future.

Data Analysis

In a well designed simulation experiment, consideration must be given to methods of analyzing data generated by the experiment. Most of the classical experimental design techniques described in the literature are used in the expectation that the data will be analyzed by one or both of the following—regression analysis and analysis of variance. Regression analysis is a collection of techniques for data analysis which utilizes the numerical properties of the levels of quantitative factors. The analysis of variance is a collection of techniques for data analysis that are appropriate when qualitative factors are present, although quantitative factors are not excluded.

The papers by Burdick, Hunter, and Naylor in [37] describe the use of response surface designs and regression analysis with computer simulation experiments with econometric models.

Several special cases of the analysis of variance have been applied to the analysis of data generated by simulation experiments with macroeconometric models. These techniques include the F-test, multiple comparisons, multiple ranking procedures, and spectral analysis. Although the F-test and multiple comparisons are well known to most economists, economists have made only limited use of multiple ranking procedures [28].

Frequently, the objective of a computer simulation experiment with an econometric model is to find the "best," "second best," "third best," etc. policy. Although multiple comparison methods of estimating the sizes of differences between policies (as measured by population means) are often used as a way of attempting, indirectly, to achieve goals of this type, multiple ranking methods represent a more direct approach to the solution of the ranking problem. A good estimate of the rank of a set of economic policies is simply the ranking of the sample means associated with the given policies. Because of random error, however, sample rankings may yield incorrect results. With what probability can we say that a ranking of sample means represents the true ranking of population means? It is basically this question that multiple ranking procedures attempt to answer.

The F-test, multiple comparisons, and multiple ranking procedures have been used by Naylor, Wertz, and Wonnacott [41] to evaluate the effects of alternative monetary and fiscal policies on the variance of national income with a simulation experiment with a macroeconometric model.

Another technique that has proved to be useful in analyzing data generated by computer simulation experiments with econometric models is spectral analysis. Spectral analysis was developed specifically to analyze time series data that are autocorrelated. For the purpose of describing the behavior of a stochastic variate (e.g., GNP) over time, the information content of spectral analysis is greater than that of sample means and variances. With spectral analysis it is relatively easy to construct confidence bands and to test hypotheses for the purpose of comparing the simulated results of the use of two or more alternative economic policies. Frequently, it is impossible to detect differences in time series generated by simulation experiments when one restricts himself to simple graphical analysis. Spectral analysis provides a means of objectively comparing time series generated with a computer model. Spectral analysis can also be used as a technique for validating an econometric model of an economic system. By comparing the estimated spectra of simulated data and corresponding real world data, one can infer how well the model resembles the system it was designed to emulate.

Naylor, Wertz, and Wonnacott [42] have used spectral analysis to analyze data generated by a simulation experiment with an econometric model. Spectral analysis was employed to compare the effects of alternative economic policies on national income generated by the simulation experiment.

Some Unresolved Problems

We shall conclude this paper by summarizing a number of methodological problems associated with policy simulation experiments with macroeconomic models for which solutions do not presently exist.

Simulation versus analytical solutions

Explicit analytical solutions for the reduced form of simultaneous, nonlinear, stochastic difference equations are frequently difficult, if not impossible, to obtain. For this reason economists have found it necessary to resort to numerical techniques or computer simulation experiments

to validate these models and to investigate their dynamic properties. Howrey and Kelejian [27] have recently raised some very interesting questions concerning the use of computer simulation techniques with econometric models. In general, they have suggested that the role of computer simulation as a tool of analysis of econometric models should be reconsidered. They have argued "that once a *linear* econometric model has been estimated and tested in terms of the known distribution theory concerning parameter estimates, simulation experiments . . . yield *no additional information* about the validity of the model." In addition, they have pointed out that "although some of the dynamic properties of linear models can be inferred from simulation results, an analytical technique (spectral analysis) based on the model itself is available for this purpose" [27]. Since any nonlinear econometric model can be approximated by a linear model through the use of an appropriate Taylor series expansion, the arguments of Howrey and Kelejian can also be extended to include nonlinear econometric models. The questions they raise are important ones and merit further theoretical and empirical consideration. In general, the whole question of when to use simulation rather than standard mathematical techniques is a question that needs further investigation, not only with econometric models but with economic models of all types.

Perverse simulation results

Econometric models that have been estimated properly and are based on sound economic theory may yield nonsensical simulation results. That is, the simulations may "explode" and inherently positive variables may turn negative, leading to results that are in complete conflict with reality. We must learn more about the mathematical properties of our models, with the hope of devising techniques that will enable us to spot these problems with our models analytically before running simulations with them. For example, Howrey and Kelejian [27] have shown that the application of simulation techniques to nonstochastic econometric models that contain nonlinearities in the endogenous variables "yields results that are not consistent with the properties of the reduced form of the model." What other information can be gleaned from the structure of econometric models prior to conducting simulation experiments?

There appears to be a definite need to combine the approaches of the econometrician and the systems analyst in formulating models of complex economic systems. To the systems analyst, an economic model consists of a set of mathematical inequalities which reflect the various conditional statements, logical branchings, and complex feedback mechanisms that depict the economy as a dynamic, self-regulating system. Although economists have made considerable progress in building econometric models and developing techniques to estimate their parameters, little or no attention has been given to alternative model structures such as those used by systems analysts. The possibility of developing models of the economy as a whole that consist of structures other than simultaneous difference equations needs to be explored more fully. Special attention should be given to the types of logical models developed by systems analysts. To use systems analysis to build macroeconomic models that accurately reflect the underlying decision processes of the total economy, it may be necessary to draw heavily on other disciplines, including sociology, psychology, and political science.

Inadequate estimation techniques

Although the static properties of simultaneous equation estimators such as OLS, 2SLS, LISE, FIML, and 3SLS are well known, we have no assurance whatsoever from econometric theory that a model whose parameters have been estimated by one of these methods will yield valid, dynamic, closed-loop simulations. That is, it is quite possible for a model that has been estimated by one of the aforementioned techniques to yield simulations which in no sense resemble the behavior of the system that they were designed to emulate. What is needed is a new estimation technique which uses as its criterion of goodness-of-fit, "How well does the model simulate?" rather than "How well does the static model fit the historical data based on one-period predictions?" The question of whether poor simulation results with econometric models are due to improper methods of estimation or a misspecified model is one that calls for further research.

Unstable coefficients

The simulation experiments of the Adelmans [1, 2] and others have demonstrated the effects of including additive stochastic error terms in econometric models. Howrey and Kelejian [27] have also treated this question from a theoretical standpoint. What has not been considered is the question of what happens if we treat the coefficients of an econometric model as random

variables in simulation experiments. Yet we know very well that these coefficients are indeed random variables and that they are not likely to remain constant over long periods of time. Preliminary experiments with this problem indicate that by shocking the coefficients of the Klein-Goldberger model [32] we encounter two different problems. First, we encounter serious difficulty in solving the model. Second, the results are quite different from the deterministic simulations as well as the simulations with additive shocks. Finally, the structure of the model may in reality evolve over time, and the assumption of constant coefficients, independent of time, may require review.

References

[1] ADELMAN, IRMA, "Long Cycles—A Simulation Experiment," in *Symposium on Simulation Models*, ed. Austin C. Hoggatt and Frederick E. Balderston, Cincinnati, South-Western Publishing Co., 1963.

[2] ADELMAN, IRMA, AND FRANK ADELMAN, "The Dynamic Properties of the Klein-Goldberger Model," *Econometrica* 27:596–625, Oct. 1959.

[3] ANDO, ALBERT, AND STEPHEN GOLDFELD, "An Econometric Model for Evaluating Stabilization Policies," in *Studies in Economic Stabilization*, Washington, The Brookings Institution, 1968.

[4] ANDO, ALBERT K., FRANCO MODIGLIANI, AND ROBERT RASCHE, "Economic Theory in the FRB-MIT-PENN Model," paper presented at the Conference on Econometric Models of Cyclical Behavior, Harvard University, Nov. 1969.

[5] COOPER, RONALD L., AND DALE W. JORGENSON, "The Predictive Performance of Quarterly Econometric Models of the United States," paper presented at the Conference on Econometric Models of Cyclical Behavior, Harvard University, Nov. 1969.

[6] DELEEUW, FRANK, "Financial Markets in Business Cycles: A Simulation Study," *Am. Econ. Rev.* 54:309–323, May 1964.

[7] DELEEUW, FRANK, AND EDWARD GRAMLICH, "The Federal Reserve-M.I.T. Econometric Model," *Fed. Res. Bul.* 1:11–40, Jan. 1968.

[8] DUESENBERRY, JAMES S., GARY FROMM, LAWRENCE R. KLEIN, AND EDWIN KUH, *The Brookings Model: Some Further Results*, Chicago, Rand McNally, 1969.

[9] ENGLE, R. F., AND T. C. LIU, "Effects of Aggregation over Time on Dynamic Characteristics of an Econometric Model," paper presented at the Conference on Econometric Models of Cyclical Behavior, Harvard University, Nov. 1969.

[10] EVANS, MICHAEL, "Computer Simulation of Nonlinear Econometric Models," in *The Design of Computer Simulation Experiments*, ed. Thomas H. Naylor, Durham, North Carolina, Duke University Press, 1969.

[11] EVANS, MICHAEL K., *Macroeconomic Activity*, New York, Harper & Row, 1969.

[12] EVANS, MICHAEL K., YOEL, HAITOVSKY, AND GEORGE I. TREYZ, "An Analysis of the Forecasting Properties of the U.S. Econometric Models," paper presented at the Conference on Econometric Models of Cyclical Behavior, Harvard University, Nov. 1969.

[13] EVANS, MICHAEL K., AND LAWRENCE R. KLEIN, *The Wharton Econometric Forecasting Model*, 2nd ed., Philadelphia, Wharton School of Finance and Commerce, University of Pennsylvania, 1968.

[14] EVANS, M. K., AND L. R. KLEIN, "Short and Long Term Simulations with the Wharton Model," paper presented at the Conference on Econometric Models of Cyclical Behavior, Harvard University, Nov. 1969.

[15] FOX, KARL, J. K. SENGUPTA, AND ERIK THORBECKE, *The Theory of Quantitative Economic Policy*, Chicago, Rand McNally, 1966.

[16] FROMM, GARY, "An Evaluation of Monetary Policy Instruments," in *The Brookings Model: Some Further Results*, ed. J. S. Duesenberry et al., Chicago, Rand McNally, 1969.

[17] FROMM, GARY, "Utility Theory and the Analysis of Simulation Output Data," in *The Design of Computer Simulation Experiments*, ed. Thomas H. Naylor, Durham, North Carolina, Duke University Press, 1969.

[18] FROMM, GARY, AND LAWRENCE R. KLEIN, "Short- and Long-Term Simulations with the Brookings Model," paper presented at the Conference on Econometric Models of Cyclical Behavior, Harvard University, Nov. 1969.

[19] FROMM, GARY, AND PAUL TAUBMANN, *Policy Simulations with an Econometric Model*, Washington, The Brookings Institution, 1968.

[20] GERACI, VINCENT J., "On the Simulation of Dynamic Econometric Models," Econometric System Simulation Program Working Paper 37, Duke University Aug. 1969.

[21] GILMAN, MICHAEL J., "A Brief Survey of Stopping Rules in Monte Carlo Simulations," in *Digest of the Second Conference on Applications of Simulation*, Dec. 1968.

[22] GOLDBERGER, ARTHUR S., "Best Linear Unbiased Prediction in the Generalized Linear Regression Model," *J. Am Stat. Assoc.* 57:369–375, June 1962.

[23] GREEN, GEORGE, "Short- and Long-Term Simulations with the OBE Econometric Model," paper presented at the Conference on Econometric Models of Cyclical Behavior, Harvard University, Nov. 1969.

[24] GRILLICHES, ZVI, "The Brookings Model Volume: A Review Article," *Rev. Econ. and Stat.* 50:215–234, May 1968.

[25] HOLT, CHARLES C., et. al., *PROGRAM SIMULATE II*, Madison, Wisconsin, Social Systems Research Institute, April 1967.

[26] HOWREY, E., PHILIP, "Dynamic Properties of a Condensed Version of the Wharton Model," paper presented at the Conference on Econometric Models of Cyclical Behavior, Harvard University, Nov. 1969.

[27] HOWREY, PHILIP, AND H. H. KELEJIAN, "Computer

Simulation Versus Analytical Solutions," in *The Design of Computer Simulation Experiments*, ed. Thomas H. Naylor, Durham, North Carolina, Duke University Press, 1969.

[28] KLEIJNEN, JACK P., AND THOMAS H. NAYLOR, "The Use of Multiple Ranking Procedures to Analyze Business and Economic Systems," to be published in the *J. Am. Stat. Assoc.*

[29] KLEIN, LAWRENCE R., "An Econometric Analysis of the Tax Cut of 1964," in *The Brookings Model: Some Further Results*, ed. J. S. Duesenberry et al., Chicago, Rand McNally, 1969.

[30] KLEIN, LAWRENCE R., "Solutions of the Complete System," in *The Brookings Model: Some Further Results*, ed. J. S. Duesenberry et al., Chicago, Rand McNally, 1969.

[31] KLEIN, LAWRENCE R., AND MICHAEL K. EVANS, *Econometric Gaming*, New York, Macmillan Company, 1969.

[32] KLEIN, L., AND A. S. GOLDBERGER, *An Econometric Model of the United States, 1929–1952*, Amsterdam, North-Holland Publishing Co., 1955.

[33] LIEBENBERG, M., A. A. HIRSCH, AND P. POPKIN, "A Quarterly Econometric Model of the United States," *Survey Curr. Bus.* 46:13–39, May 1966.

[34] LIU, TA-CHUNG, "A Monthly Recursive Econometric Model of the United States" *Rev. Econ. and Stat.* 51:1–13, Feb. 1969.

[35] MOORE, GEOFFREY H., CHARLOTTE BOSCHAN, AND VICTOR ZARNOWITZ, "Business Cycle Analysis of Econometric Model Simulations," paper presented at the Conference on Econometric Models of Cyclical Behavior, Harvard University, Nov. 1969.

[36] NAGAR, A. L., "Stochastic Simulations of the Brookings Econometric Model," in *The Brookings Model: Some Further Results*, ed. J. S. Duesenberry, et al., Chicago, Rand McNally, 1960.

[37] NAYLOR, THOMAS H., ed., *The Design of Computer Simulation Experiments*, Durham, North Carolina, Duke University Press, 1969.

[38] NAYLOR, THOMAS H., JOSEPH L. BALINTFY, DONALD S. BURDICK, AND KONG CHU, *Computer Simulation Techniques*, New York, John Wiley & Sons, 1966.

[39] NAYLOR, THOMAS H, DONALD S. BURDICK, AND W. EARL SASSER, "Computer Simulation Experiments with Economic Systems: The Problem of Experimental Design," *J. Am. Stat. Assoc.* 62:1315–1337, Dec. 1967.

[40] NAYLOR, THOMAS H., AND J. M. FINGER, "Verification of Computer Simulation Models," *Mgt. Sci.* 14:92–101, Oct. 1967.

[41] NAYLOR, THOMAS H., KENNETH WERTZ, AND THOMAS H. WONNACOTT, "Some Methods for Evaluating the Effects of Economic Policies Using Simulation Experiments," *Rev. Internat. Stat. Inst.* 36:184–200, 1968.

[42] ———, "Spectra Analysis of Data Generated by Simulation Experiments with Econometric Models," *Econometrica* 37:333–352, April 1969.

[43] SHUPP, FRANKLING R., "Welfare Functions and Stabilization Policies for a Nonlinear Macroeconomic Model," University of Illinois, Quantitative Economics Workshop Paper 6903, July 1969.

[44] STEKLER, H. O., "Forecasting with an Econometric Model: Comment," *Am. Econ. Rev.* 56:1241–1248, Dec. 1966.

[45] STEKLER, H. O., "Forecasting with Econometric Models: An Evaluation," *Econometrica* 36:437–463, July-Oct. 1968.

[46] SUITS, DANIEL B., "Forecasting and Analysis with an Econometric Model," *Am. Econ. Rev.* 52:104–132, Mar. 1962.

[47] TREYZ, GEORGE I., *Computer Problem Booklet for Economics*, New York, Macmillan Co., 1969.

DISCUSSION: MACROSIMULATION MODELS

BY

E. P. HOLLAND

Reprinted from
AMERICAN JOURNAL OF AGRICULTURAL ECONOMICS
Vol. 52, No. 2, May, 1970

Discussion: Macrosimulation Models

EDWARD P. HOLLAND

On first impression, these two papers seem to be concerned with different subjects. In part, the difference is that Naylor's is a general review of the state of the art of one aspect of simulation methodology, while the paper by Halter, Hayenga, and Manetsch is a more specific exposition of some other aspects of simulation, illustrated by a particular case. Naylor's primary concern is the design of simulation experiments, with only secondary consideration of the nature of the model. Halter, Hayenga, and Manetsch give most of their attention to the formulation of a model, and their explanation of its use ignores a number of the problems Naylor regards as important.

But there are differences that interest me far more than the differences in coverage of the two papers. What interests me are the differences in treatment of some topics that are included in both papers and the differences in philosophy that I think are implicit in the discussions of procedures and in the definitions of problems.

I may be oversimplifying a little but I think it is fairly accurate to say that Professor Naylor represents the econometrician, viewing simulation as an extension of his formalized field—an extension that offers new opportunities but that should be exploited with care to maintain the values of a close connection with rigorous statistical theory. The Michigan State trio, on the other side, represent the systems analysts who believe they are making a model of "reality," uninhibited by the inflexibility of the econometrician's standard mathematical forms.

Obviously, there are some fundamental conflicts between these views on simulation. It is of more than casual interest to try to understand their differences and to speculate on the possibility of an eventual synthesis.

First, concerning model formulation, it would seem that Naylor regrets that he cannot keep his models linear, while the Michigan State group go in freely for exponential lags, branches, and multiplicative variables. It is not that Naylor does not recognize nonlinearity; in fact he says, "Unfortunately, realistic econometric models are seldom linear," and he speaks at several points about nonlinear models. But near the end, after quoting Howrey and Kelejian on the superfluity of simulation for linear models, he says, "Since any nonlinear econometric model can be approximated by a linear model . . . the arguments of Howrey and Kelejian can also be extended to include nonlinear econometric models." If we try to imagine approximating all the different kinds of nonlinearity of the Nigeria model by "appropriate Taylor series expansions" in order to apply spectral analysis to the model, I think we must admit the prospect is not attractive. Moreover, such linearization is suitable only for small perturbations, whereas in studying development plans and policies, we are concerned with major changes in the variables.

E. P. HOLLAND *is an economist with the International Bank for Reconstruction and Development, Washington, D.C.*

As for the Michigan State group's approach to model formulation, I'm sure it must make a good econometrician like Professor Naylor shudder to read, "Modernization proceeds at a rate directly related to the level of profitability for the producer. This component also includes an innovation diffusion mechanism which allows for spontaneous (farmer to farmer) diffusion of modern techniques occurring over time, if necessary inputs, information requirements, etc. are available." Imagine trying to verify that relation and estimate its parameters! But the defense of such a priori formulation is hard to overcome. If experienced observers believe that is the way things really work, that is the way they should be in the model, even if the parameters cannot be measured.

Experimental design is discussed by the Michigan State team only in terms of sensitivity tests and analysis. The system is treated as a nonstochastic or fully deterministic one for each run, with repetitions of runs made to investigate different *assigned* values of coefficients. These variations represent explorations of the effects of possible errors in estimating coefficients and explorations of the effects of changing policy elements. Presumably the results are analyzed by comparing the endogenous variables from pairs or very small groups of runs.

Naylor talks of experimental design in terms of multiple runs for each specification of inputs (policy, etc.), as befits a stochastic model. Presumably, for any given policy combination one gets a probability distribution of results. How this would work in practice for a complex model with a large number of factors subject to randomization is hard to see. If the purpose of the experiments is to design policies or make plans by cut-and-try methods, and if random variations of some variable are not part of the essence of the problem, then it would seem just as valid and a lot less awkward to use a deterministic model with suitable sensitivity testing of selected policy comparisons. However, if random variations in a parameter or variable are likely to affect the choice of policies—for example, if one plan of agricultural development is more sensitive than another to vagaries of the weather—it would seem necessary to include stochastic disturbances of that element and to make the large number of runs that are thereby required. Halter, Hayenga, and Manetsch might well consider that possibility for future experiments.

I have discussed some differences between the viewpoints that are evident in the two papers. Now it may be a good thing to note their agreement on one very basic point—the value of simulation in the relation between analyst and policy maker. Both point out the advantage, inherent in simulation, of showing the policy maker the comparative results of alternative policies in terms of an array of familiar variables on which he can base a choice. The problem of communication between analysts and policy makers is one of great importance, and anyone who thinks it is possible to formulate a policy maker's preference function or to establish a set of targets that will not be changed after the analysis has been made is out of touch with human psychology. The presentation of multivariable outcomes of alternative policies and the question, "What would happen if we changed such-and-such policy element?" followed by further tests, are by far the best forms thus far devised for these important communications.

Another topic on which the two papers seem to agree—up to a point—is the validation of models. Both speak of matching historical data and of verifying forecasts, judging the validity of the model by the fidelity with which it matches observed data. But this sort of validation is not sufficient; it misses a crucial point. The most important requirement of a simulation that is to be used for policy experiments is that it should respond correctly to changes in the policies at issue. For this purpose, it is important that the mechanisms involved in the response should be right qualitatively, as well as sufficiently accurate numerically. If similar policy changes have not occurred in the past, then matching past data is no indication that the response to policy change will be properly simulated. Recognizing the need for something more, Halter, Hayenga, and Manetsch write of "validation by deduction," but that is really no validation. That simply represents faith in the validity of the formulation. Naylor, in his list of unresolved problems, calls for a new criterion of goodness-of-fit: "How well does the model simulate?" rather than "How well does the static model fit historical data . . .?" But how can that be judged?

If we are optimistic, we may hope that the systems analysts will learn to be more concerned about the problems of statistical estimation and validation and about the methodology of using their models, once they have been created. Some hope is already evoked for a possible synthesis by Naylor's remarks about the need for combining the approaches of the econometrician and the systems analyst. But I believe that several of us

economists in this session are entitled to feel somewhat slighted by his statement that economists have given little or no attention to alternative model structures such as those used by systems analysts. I grant that we haven't got far in developing new estimation methods, but we have been formulating the models. Of course there is room for still more economists to give attention to this subject, and we shall welcome their help. There are plenty of problems. There is also a need for better communication about what we have been doing. Naylor's final sentence suggests that just possibly we might have to consider using coefficients that vary with time. Well, some of us have been using them for a number of years.

DISCUSSION: MACROSIMULATION MODELS

BY

GLENN L. JOHNSON

Reprinted from
AMERICAN JOURNAL OF AGRICULTURAL ECONOMICS
Vol. 52, No. 2, May, 1970

Discussion: Macrosimulation Models

GLENN L. JOHNSON

We've had two good, useful papers: Naylor's did a very nice job of comparing the Theil, Tinbergen, and simulation approaches and calling for more attention "to the types of logical models which have been developed by systems analysts." Halter, Hayenga, and Manetsch provided us with an application of the system science approach, Manetsch being a member of the Department of Electrical Engineering and Systems Science in the College of Engineering.

Both papers contain much with which we can agree and which, if considered seriously, would improve the work of those using mathematics, theory from various disciplines, and statistics to aid decision makers such as farmers, business men, secretaries and ministers of various governmental units, ministers of economic planning (abroad), and the director of the Bureau of the Budget here at home.

I was pleased with Naylor's clear comparison of the Theil, Tinbergen, and "policy" simulation approaches. It was also good to read that "economists would do well to spend less time trying to specify the social welfare functions of policy makers and spend more time seeking solutions to some of the problems of policy makers." I can only applaud Naylor's critical comments on the lack of attention to arbitrary sample sizes and lengths of simulation runs. He noted the importance of Howrey's and Kelejian's questions about the value of simulation experiments with econometric models in establishing the validity of econometric models. Also, I could only mutter a grateful amen when I read in his discussion of systems analysis that "it may be necessary to draw heavily on other disciplines including sociology, psychology, and political science." However, I would have been still happier if he had dropped the "may be," replaced the phrase with "is" and included the physical sciences.

Candidly, I am required to be careful and reserved in commenting favorably on the Halter, Hayenga, Manetsch paper. It was written as part of a project that I direct and has already suffered from my criticisms and suggestions. Thus, there may be some sentences in it with which I agree more fully than the authors do. However, with this by way of warning, I will proceed with a few favorable comments. The first is that they have illustrated the substantial difference between the "systems" building-block approach and the simultaneous equations approach Naylor discussed. They have also stressed the importance of such work to the broad range of Nigerian experience available to them from the Nigerian Consortium. I would like to add that this experience also came from the MSU/U of Nigeria project and that it covers a wide range of disciplines including the crucial technical disciplines of animal husbandry, crop science, and soil science. In his presentation, Hayenga skipped some of the details about the construction of the model and sensitivity tests. These are interesting, instructive, and worth looking up in the longer paper, which has been distributed here but not presented. The stress on the iterative nature of the process of building a "systems" model was good—I might have given it even greater emphasis.

Despite the above favorable comments about the two papers, I must discuss some uneasy rumblings I have about computer simulations. Basically, these uneasy feelings involve simple ideas. We shouldn't let simple ideas "turn us off," however, as so many of our useful techniques and theories are based on simple ideas. The reduced form idea, for instance, is a very simple one. So is

GLENN L. JOHNSON *is professor of agricultural economics at Michigan State University.*

the idea of errors of the first and second kinds, which were recognized in Christian liturgies for centuries before incorporation into statistical theory, a theory which, to my knowledge, has not yet dealt with the somewhat more complex but still simple idea of six kinds of errors in choosing among three alternatives.

In a broad sense, the basic idea in simulation is simple and has been employed for centuries. The idea is to determine the performance or characteristics of some system through a sequence of operations. Simulation was used to develop wind tunnels, hydrological testing tanks, pilot training simulators. It has been used to develop the Boeing 747 and sets of pen and pencil projections made for the Secretary of Agriculture to determine how changes in acreage allotments affect agriculture, a simultaneous equation system of the U.S. economy, and our system of equations for the Nigerian agricultural economy.

Like all of you, I've been using various more or less formal and more or less computerized simulations for a long time. Some of these have assisted me in my own decisions, others have been done as teaching aids for my classroom, others have been parts of research projects designed to have general usefulness, while others have been done to help specific decision makers handle specific problems. I believe we have much to learn from our successes and failures in carrying out such simulation aids and that much of what we learn will have simple, but profound, impacts on our quantitative technical, methodological, and philosophical approaches to problem-solving simulations.

Back in high school, my vocational agriculture teacher taught me how to budget farm businesses through time in order to study income flows, net worth accumulations, etc. I used what he taught me, and my pen and pencil computations indicated that I should leave the farm, a decision I have never regretted. When I think back, I note five interesting things about the computations: They (1) were interdisciplinary and technical, as well as social; (2) involved both simultaneous and nonsimultaneous systems of relationships; (3) utilized normative as well as nonnormative concepts which were consistent with each other (and with experience) and were clear and workable; (4) were very creative, inventive, and original in envisioning how the relevant physical, institutional, and social worlds could be reorganized and controlled; and (5) made important use of lagged endogenous variables.

We've had similar experiences with architects in drawing house plans based on their inventories of our resources, income flows, needs, taste, and preferences. As an architect submits plans to a family and then helps it simulate living in the house, the family learns much, both normatively and nonnormatively, both technically and nontechnically, and certainly interdisciplinarily. One can appreciate the inventiveness, creativity, and originality involved. Some systems of simultaneous equations are involved—heat, air, electrical, economic, and psychological phenomena. But nonsimultaneous equations and lagged endogenous variables are also applicable to the family living cycle.

If time permitted, I could cite simulation experiences involving (1) paper, pencil, and desk calculator projections in the U.S. Department of Agriculture for Congressional committees and the Secretary's office, (2) Navy supply corps instruction with simulated naval operations at the Harvard School of Business Administration, (3) my own use of paper and pencil budget simulations in training farm managers, (4) simulations from systems of simultaneous equations of different parts of the U.S. agricultural economy, (5) the use of paper, pencil, and desk calculator projections by the Nigerian Consortium, and (6) our present computerized "systems science" simulation of the Nigerian agricultural economy. If I did go through all six of these in detail, I would encounter, each time, the same considerations I listed in discussing budgeting my own decision to farm or not to farm, as well as in the family house-building decisions.

To reiterate, those five considerations were (1) interdisciplinary information, technical as well as nontechnical, (2) nonsimultaneous as well as simultaneous relationships, (3) the need to develop normative as well as nonnormative concepts, (4) a major role for creativity, inventiveness, and originality, and (5) lagged endogenous variables. At more macrolevels, I should also add that serious questions arise about decision-making rules—majority vote, maximization of the present values of expected future returns, minimaxing, etc.

Our two papers today have jointly, if not always singly, handled the use of interdisciplinary and technical, as well as social and economic (nontechnical) information. Between them they have handled nonsimultaneous as well as simultaneous relationships. Both papers have recognized the need to exploit lagged endogenous variables.

I have some misgivings about the two papers.

These misgivings involve normative information, creativity, and decision-making rules as a special aspect of each of these.

In my opinion, Naylor has correctly rejected Theil's social welfare function approach as unrealistic and oversimplified. He has also rejected the Tinbergen approach of prior targets as failing to recognize that target selection is one of the tasks for which simulation is useful. The Halter, Hayenga, Manetsch paper presents a rather complete diagram of the process but does not explicitly discuss dealing with the normative in helping a decision maker or policy maker select targets, goals, or objectives. When I am both simulator and decision maker, the interaction between simulator and decision maker is good. When I am a simulator helping a decision maker, the interaction is poor and the iterations are harder to make. It is harder to picture the long-range "pros" and "cons" of the consequences of alternative decisions and policies, yet even more crucial that objective concepts be acquired for the pros and cons.

The capacity of researchers to investigate the normative is often, in my opinion, restricted by the "thoughts of defunct" philosophers. One of the most restrictive philosophies is positivism, which seems to have peaked in agricultural economics and econometrics about 20 to 25 years after its decline in philosophic circles. As Naylor points out, Tinbergen's conditional normativism is also restrictive. In effect, both approaches put normative concepts beyond logical discussion and appeals to experience.

I wish one or both papers had investigated the role of interactions between simulators and decision makers and subsequent interactions as an objective means of answering normative questions. Such a discussion would go deep into philosophy and is beyond the scope of a discussant's comments. However, it is needed badly by simulators under the lagged influence of positivism, so common among quantitative economists and econometricians.

I would like to comment briefly on creativity and originality. In solving problems, previously unconceived technological, institutional, and behaviorial arrangements and patterns are often crucial. Free, uninhibited interaction between simulators and decision makers is important for creativity. And the interaction must be on normative as well as nonnormative questions if the originality is to be creative, not merely novel or possibly destructively novel, as were some of Hitler's "innovations." In a sense, positivism is a deterrent to creativity. It precludes the possibility of objective normative knowledge. So does Tinbergen's conditional normativism.

Another constraint on creativity is disciplinary egocentrism. Simulators and decision makers cannot be technologically creative while playing the sole role of economists. Nor can sociologically-oriented communication specialists be creative with respect to price control institutions while they concentrate on sociology regardless of how much information is communicated by the price system.

I would fault Naylor's paper slightly because of his stress on experimental design. This can become a sort of disciplinary "hangup" for economists and statisticians. If this interest diverts attention away from creative interaction with decision makers and policy makers in conceiving new alternatives as possible solutions to a problem, I'm afraid opportunity costs can greatly exceed returns to the experiment. The decision maker needs to be part of the experimental design.

I regret I don't have time to discuss (1) the absence of attention to linear programming in the two papers, and (2) the great potential use of simulation games in teaching economic development as well as in teaching farm and business management.

In closing, let me say again that we've had two good papers, well worthy of publication as complements. As such, they would be most useful in teaching and in doing simulation.

DISCUSSION: MACROSIMULATION MODELS

BY

DAVID T. KRESGE

Reprinted from
AMERICAN JOURNAL OF AGRICULTURAL ECONOMICS
Vol. 52, No. 2, May, 1970

Discussion: Macrosimulation Models

DAVID T. KRESGE

As applied to development planning, simulation analysis is as yet more an art than a science, and some would say an occult art too. Generally there is very little data available for either the estimation or evaluation of the simulation model. The bits and pieces of information which are available are at best incomplete and, only too frequently, are inconsistent as well. In this con-

text, construction of a simulation model clearly involves a rather impressive act of faith—but then so does any other form of development planning. Simulation analysis is an exercise in pragmatism and should be judged in a pragmatic fashion. It is a way of examining problems that are too complex to be handled by less comprehensive methods. To be useful, a simulation model does not have to produce perfect results; it merely has to improve on other planning methods.

Viewed in this light, it seems clear that the work of Halter, Hayenga, and Manetsch is an appropriate and potentially useful application of simulation techniques. The potential usefulness is stressed, first, because the model is not yet complete and, second, because at present it does seem to have some serious shortcomings. Since my function is presumably not to praise the authors but to offer constructive criticism, I will concentrate my comments on what I regard as the shortcomings.

The key component in the simulation model is the mechanism for allocating land and labor among the different crops in each region. The structural equations presented in the appendix and the simulation results presented in Table 1 indicate a rather schizophrenic behavior pattern concerning the role of the profit motive. Among cash crops (groundnuts, cotton, and cash food), the profit motive is the sole factor determining the allocation of land. But food prices and the production of food seem effectively impervious to any sort of profit motivation. In addition to being inconsistent, neither of these extreme positions seems to be a plausible description of expected behavior.

To be specific, it does not seem likely that any net increase in land under cultivation would be devoted entirely to the region's single most profitable crop. For this sort of optimizing behavior to be an accurate description of reality, at least three major conditions would have to be satisfied: (1) all the crop groupings should be homogeneous; (2) information on relative profitability would have to be readily available to all producers; and (3) all producers would have to be profit maximizers. While the first assumption may be satisfied in the present case (though it is unlikely that "food" is a homogeneous grouping), surely the last two conditions are not met. The simulation results in run 12 provide an illustration of the rather implausible behavior produced by these assumptions. In that run there is a 20 percent increase in food yields; yet there is absolutely no increase in the production of food. The entire change in productivity is used to release land from food production and to put the land into the production of groundnuts and cotton. Furthermore, in the third region, where all three crops can be grown, all of the released land must go into either groundnuts or cotton but not both. It would seem better to recognize that there is much more inertia in the real world, perhaps due to poor information or simply to habit. The transfer of land to the more profitable crops is likely to take some time, rather than occurring immediately as implied in the present model.

On the other hand, the simulation results indicate that food production is motivated by something other than profits. Indeed, in terms of profitability, food seems to be a distinctly inferior crop. Farmers produce only enough food to provide subsistence for the population. Given the slightest opportunity, they switch land from food to groundnuts or cotton. It certainly seems plausible that even under these conditions farmers would produce enough food to sustain themselves, but it is unclear what motivates them to produce food for the nonfarm population. If food production is unprofitable, one would expect food prices to rise until it does become profitable. Either that or farmers are being coerced into producing food.

A second set of shortcomings in the model involves factors which should in principle be endogenous to the model but which are now specified exogenously. Of course, this may simply reflect the fact that the model is in a fairly early stage of evolution. In any case, the authors should expand the model to make nonfarm income an endogenous variable. It clearly makes no sense to prespecify the income of one-third of the economy independently of the income of the other two-thirds. Also, the labor force participation rate should respond to changes in economic conditions. This variable plays a critical role in determining the amount of land allocated to cash crops and is now simply a trend variable. Finally, the per capita demand for food on farms should also be made responsive to economic factors such as farm incomes, living standards, prices, etc.

Apart from possible changes in the structure of the model, the authors should give some careful attention to the design of simulation experiments and to the presentation of results. The sensitivity experiments shown in the paper are much less informative than they should be. For example, the authors evaluate the relative importance of

different parameters by comparing the responses to a 20 percent change in each parameter. But a 20 percent change in labor productivity is in no sense comparable to a 20 percent change in the parameter governing the response to relative profitability. Labor productivity can be measured directly; the behavioral parameter cannot be. As a result, the possible error in the estimated profitability parameter is enormous compared to the possible error in the estimate of labor productivity. Thus, the results of runs 2 and 3 (which change labor productivity by 20 percent) are not comparable to the results of runs 6–8 (which change the profitability parameters by 20 percent). The authors, though probably correct, are premature in their judgment that the latter parameters are much less important than the former. In carrying out future sensitivity analysis, changes in parameters should be related to the probable error or variance in the parameter estimates.

Though presentation of results is admittedly a detail, it is a detail of some importance if one actually intends to communicate with policy makers or their staffs. The use of measures like sums-of-squared-deviations, as in Table 1, is extremely cumbersome. In presenting calibration results (run 1), that measure is inferior to other measures such as mean-squared-error and Theil's inequality coefficient. In evaluating the results of sensitivity analysis (runs 2–13), the use of any of these measures is completely meaningless. All of these quantities are designed to measure deviations, in either direction, from the actual data. But in sensitivity analysis it makes a great deal of difference whether a change in a policy parameter causes output to go down or to go up. Appropriate measures for use in sensitivity analysis are such things as the average change, the cumulative change, or the present discounted value of the change in variables of interest. And to be most appropriate, the changes should be calculated relative to some standard simulation run, not relative to the actual data.

As a final comment, I would suggest that the authors attempt to devise ways of presenting their results in graphical form. A graph may not be worth one thousand words but it can certainly replace a lot of dry statistics. And it is much more graphic to boot.