AGENCY FOR INTERNATIONAL DEVELOPMENT
WASHINGTON, D. C. 20523

BIBLIOGRAPHIC INPUT SHEET

FOR AID USE ONLY

1. SUBJECT CLASSIFICATION

A. PRIMARY: Agriculture — AH10-0000-0000

B. SECONDARY: Pests of plants

2. TITLE AND SUBTITLE

Solar energy sources for biotelemetry

3. AUTHOR(S)

Kolz,A.L.; Corner,G.W.; Pearson,E.W.

4. DOCUMENT DATE	5. NUMBER OF PAGES	6. ARC NUMBER
1971	28p.	ARC

7. REFERENCE ORGANIZATION NAME AND ADDRESS

Interior.

8. SUPPLEMENTARY NOTES *(Sponsoring Organization, Publishers, Availability)*

9. ABSTRACT

10. CONTROL NUMBER

PN-RAA-618

11. PRICE OF DOCUMENT

12. DESCRIPTORS

Biotelemetry
Birds
Radio transmitters
Solar energy

13. PROJECT NUMBER

14. CONTRACT NUMBER

PASA RA(ID)1-67 Res.

15. TYPE OF DOCUMENT

AID 590-1 (4-74)

Solar Energy Sources

for

Biotelemetry Transmitters

by

A. Lawrence Kolz - Electrical Engineer

George W. Corner - Electronic Technician

Erwin W. Pearson - Wildlife Biologist

1971

Authors are employed at:

U. S. Bureau of Sport Fisheries and Wildlife
Wildlife Research Center
Bldg. 16, Denver Federal Center
Denver, Colorado

SOLAR ENERGY SOURCES FOR BIOTELEMETRY TRANSMITTERS

Although position-locating and physiological-data transmitters that weigh only about 1 g are now readily available for telemetry studies with animals, simple primary batteries capable of powering such transmitters for even 6 months weigh more than 10 g. The capacity and weight of the energy source therefore limit both the duration of the study and the size of the animal that can be monitored. To circumvent these limitations, biologists have been forced to design their long-term experiments to allow for regular replacement of small, low-capacity batteries, a procedure that is costly in time and money as well as disruptive to the animals' behavior.

Recognizing these limitations of "fixed" capacity energy sources, many biologists have experimented with solar energy converters. Although these are reliable and adaptable (NASA has incorporated them into satellite hardware for years), biologists have generally found them unsuccessful as biotelemetry power sources. Possibly the major difficulty has been a failure to recognize the need for a systems design approach. In the hope of providing some guidelines for the design of rechargeable solar cell systems, this paper discusses various possible components, general design considerations, and gives the results of some experiments with solar cell circuits in the laboratory.

---

*This research was conducted in part with funds provided to the Bureau of Sport Fisheries and Wildlife by the Agency for International Development under the project "Control of Vertebrate Pests: Rats, Bats, and Noxious Birds," PASA RA(ID) 1-67.

COMPONENTS OF SOLAR CELL SYSTEMS

The general form of a solar cell circuit is shown in Figure 1. Its operation is simple. The solar energy converter (panel of one or more solar cells) supplies an electrical charge, through an isolation "gate," to the charge storage device (battery), which then delivers the stored charge to the electrical load such as a transmitter. Each of these components takes various forms; the choice depends on the characteristics desired for the system.

Solar Cell

The solar energy converter is a photovoltaic cell, usually of silicon or selenium, that transforms light energy into electrical energy. The potential power from bright sunlight at sea level is about 100 milliwatts (mw) per square centimeter, or 10,000 footcandles of illumination. Silicon cells normally convert 5-10 percent of this power into electrical energy; selenium cells convert about 0.5 percent. The voltage of illuminated cells is approximately constant (usually about 0.4 volt for silicon, 0.25 volt for selenium), but the current (amperage) varies almost linearly with the cell's surface area and the amount of illumination. In bright sunlight, a silicon cell will provide about 12-25 milliamperes (ma), and a selenium cell about 1-2.5 ma, per square centimeter of surface.

When the output of one solar cell is insufficient, several may be joined to form a solar panel. When the cells are joined in series, the individual cell output voltage is multiplied by the number of cells to give the array's output voltage, but current is not increased. When the cells

are joined in parallel, the situation is reversed (the solar array's output current is multiplied by the number of cells but the voltage is not increased). The panel's total power output (wattage) is, of course, the product of its terminal voltage and output current.

Isolation Gate

The isolation gate can be any component that allows energy to flow from the solar panel to the battery and prevents the battery from dissipating energy back into the solar panel during "dark" periods.

The simplest gating component is a semiconductor diode. When light is shining on the solar panel, so that its output voltage exceeds the voltage of the battery, the diode becomes forward-biased and presents a low-impedance current path. When the output voltage of the solar panel decreases, the diode becomes reverse-biased and presents a high resistance that blocks energy reversal. The disadvantage of this device is the relatively large voltage required for forward biasing (about 0.35 volts for germanium diodes, 0.65 volts for silicon diodes). Therefore, at least one silicon solar cell is needed in the panel just to operate the diode.

A second gating system is a switching transistor circuit. Like the diode, the transistor is biased to present low impedance during illumination and high impedance during darkness, but the biasing requires only about 0.1 volt. The disadvantages of a transistor gate are the added complexity of a three-terminal device and the loss of potentially available charging current that the transistor dissipates in the base-emitter junction.

A third possible gating method is an electrical relay. This would have to be designed specifically for the power levels available from a solar panel but would provide very positive gating. There would be a minimum voltage drop across the relay contacts because the contact resistance can be made less than 0.1 ohms. The disadvantages of this concept are that present ultra-sensitive relays require 10-25 mv to operate and there is an inherent hysteresis associated with their actuation and release. Nevertheless, for solar panels with high power capacity, the positive action of relay switching has definite advantages.

Charge Storage Device

A great variety of charge storage devices is available to the circuit designer. Rechargeable electrochemical sources (batteries) capable of operating over a wide range of environmental conditions are off-the-shelf items. Theoretically, large storage capacitors could also be used instead of batteries in some biotelemetric applications requiring extremely small current flow and time limited operation. Volumes of data are available from manufacturers detailing design parameters and environmental limitations of rechargeable batteries, but a few design pitfalls often glossed over in this literature are worth passing along.

First, one should be aware of the difference between primary and secondary batteries. In a secondary (rechargeable) cell, the electrochemical process is reversible; in a primary cell it is more or less irreversible. Although some primary cells can perform a limited recharge--as the literature of battery recharging units often implies--this is not a

as a function of temperature, since electrochemical processes are drastically slowed at low temperatures. If the battery is to power a pulsating load, the ratio of peak load current to average load current is also critical; most batteries will not reliably supply a peak load current several times their rated maximum continuous current.

Any battery that is to be exposed to moisture should be protected by some type of hermetic seal to prevent corrosion between the terminals. Several types of compounds may be used as sealants, but care must be taken. Some, including several epoxy compounds, are good conductors while they are still liquid and can completely discharge a battery, conceivably even shorting it to destruction.

LABORATORY TESTS OF A BIOTELEMETRIC SOLAR CELL SYSTEM

In biotelemetry research at the Denver Wildlife Research Center, we have been attempting to develop a solar cell system that will indefinitely power a 30-megahertz (MHz) radio frequency (rf), position-locating transmitter that weighs about 1.4 g and requires 1.0-1.4 volts and 0.3 ma to operate. Because the transmitter is intended for use on wild birds and small mammals weighing less than 75 g, the entire package, including antenna and attachment device, cannot weigh more than about 5 g, and the

solar cell system is therefore restricted to about 1.5 g. In designing such a system, the choice of general component types was dictated by these limitations, but several different components within each type were tested in the laboratory to determine their operating characteristics.

Components

Solar Cell.--Silicon cells were chosen because of their greater efficiency. Of five manufacturers contacted, two suggested almost identical silicon solar cell panels, and one of these (Centralab Semiconductor Division, El Monte, California[1/]) responded with sample components of two commercially available sizes--type 55 C (0.2 x 0.9 inch, 0.7 g) and type 51 C (0.4 x 0.9 inch, 1.5 g). Tests showed that both types had an open circuit voltage of 2.5 volts; at an illumination of 100 mw/cm^2, the short-circuit current of the 55 C was 6 ma, and of the 51 C, 12.5 ma. These characteristics were judged as satisfactory, so the Centralab cells were accepted as components.

Isolation Gate.--A germanium solid-state diode (1N64, General Electric[1/]) was selected as a gate because of its simplicity and small size. Tests showed that this component needed 0.35 volt for forward biasing, and so required the one extra silicon cell in the solar panel. (In breadboarding a system, it is advisable to measure this diode voltage requirement before inserting the component into the circuit.)

1/ Reference to trade names does not imply endorsement of commercial products by the Federal Government.

Battery.—The only economically available rechargeable source that would meet our size and weight requirements was a sealed nickel-cadmium (NiCd) button cell. Four sizes were ordered for testing from Gulton Industries, Inc., Metuchen, New Jersey; Union Carbide Corp., Chicago, Illinois; and Gould National Batteries, Inc., St. Paul, Minnesota. Table 1 lists the characteristics of the four sizes. The 100-milliampere-hour (mah) cells were too heavy to meet our weight restrictions and were not tested further. The 80-mah cells were maintained in the testing program to provide data at higher charging currents than could be obtained with the lower capacity cells.

Table 1. Size and capacity of four types of nickel-cadmium button cells.

Battery type	Rated capacity (mah)	Weight (grams)	Volume (cubic inch)	Capacity per unit weight (mah/gram)
B-20	20	1.1	0.03	17.7
B-50	50	3.4	0.06	14.7
V0.080	80	6.5	0.13	12.2
B-100	100	9.1	0.15	11.0

To determine how well these NiCd cells met specifications, a total of 20 cells from all three manufacturers were charged to full capacity and then discharged into a known electrical load of 0.3-0.5 ma. Battery discharge was arbitrarily defined as the point at which the terminal voltage dropped below 1.00 volt. Nine cells (three of each size) were tested at 70°F and 11 (four B-20's and seven B-50's) were tested at 0°F.

Variation in battery performance was not apparently related to either size or manufacturer. The nine cells tested at 70°F delivered 90-125 percent of their rated storage capacity, averaging 115 percent. The range was much greater at 0°F. The manufacturers' data indicated that NiCd cells at -5°F should operate at 60 percent of their rated capacity (at a 10-hour discharge current load), but our test data at 0°F did not support this. Six of the 11 cells tested at 0°F (two B-20's and six B-50's) operated at only 18-40 percent of their rated capacity at 70°F, and the total range for all 11 was 18-135 percent. Thus, for any low-temperature application, the researcher should measure the characteristics of his particular type of NiCd cell by operating it with a simulated electrical load over the temperature extremes. However, it is of interest that three of the apparently discharged 20-mah cells tested at 0°F were capable, when returned to a 70°F environment, of restoring themselves to a normal terminal voltage under a full electrical load and then powering the load for 1-3 additional days.

Tests of NiCd Cells Operating in a Solar Cell Charging Circuit

With the test components selected, two test fixtures were constructed to measure the efficiency of NiCd button cells cycled repeatedly through a daily solar cell charge in the laboratory.

Methods.--Each test fixture contained six solar charging circuits each made from five 51 C solar cells wired in series, a germanium diode, and one NiCd cell (B-20, B-50, or V0.080). Each circuit was set up with a different load current, charge current, and ratio between the two (charge replacement ratio). Figure 2 shows the general schematic of these circuits, where the amount of daily discharge is regulated by the load resistance, R_L, and the amount of charge current is regulated by both the limiting resistor, R_C, and the amount of light striking the solar panel.

Each test chamber contained a timer that turned on a 150-watt reflector-type flood lamp for 6 hours a day. The illumination from this lamp at the surface of the solar panels was measured as 4000 footcandles, or about 40 percent of bright sunlight. One chamber was equipped with a variac transformer that slowly turned the lamp on over an hour's time, simulating the variable illumination a solar cell would receive outdoors. In the second chamber, a disk with two apertures rotated between the lamp and the solar cells at about 405 revolutions per hour. The size of the aperture was set so that the cells were illuminated 50 percent of the time, for a daily charge cycle of 3 hours. The constant electrical load

chosen for each circuit drained the battery only those hours when the solar panel was not illuminated. During charging periods, the solar cell provided the power to the load resistor. For each of the 12 circuits, the load and no-load terminal voltage of the battery was recorded daily just before the light was turned on, and the solar cell charging current and terminal voltage were recorded daily about 2 hours later.

Results.--The two test chambers began continuous operation in October 1969. Some circuits were altered in order to measure significant parameters, but seven of the original 12 circuits were still operating at the time of this writing. The test results as of October 1970, are shown in Table 2.

The relationship between the various energy requirements of a rechargeable system can be stated mathematically as $I_C T_C = E I_L T_L$, where I_C = average charge current, T_C = average hours of charging time per day, E = charge replacement ratio, I_L = average load current, and T_L = average hours of battery load time per day (for this test $T_L = 24 - T_C$). Figure 3 graphically illustrates this idealized energy-balance equation when the charge replacement ratio is the 140 percent recommended by the battery manufacturers for stable operation of NiCd cells--in other words, when the charging circuit supplies the battery 1.4 times the energy used by the electrical load.

The two major variables in the energy-balance equation that affect long-term battery operation are the amount of charge current and the charge replacement ratio. The manufacturers recommended a charge current equal

to the 10-hour discharge rate for the NiCd button cells; some cells in these tests were charged at more than 150 percent of this figure. These highly charged cells showed some deleterious effects from the overload, but none catastrophically failed. The major effect indicated was a gradual decrease in the battery voltage. Oddly enough, the only cell to exhibit a failure was operating under a slight (30 percent) charging current overload and a nominally recommended 138 percent charge replacement ratio. This failure did not occur until the battery had completed 40 charge-discharge cycles. However, NiCd cells are normally expected to deliver 200-250 complete charge-discharge cycles, a much more stringent mode of operation than in these tests, where the battery was never completely discharged before a charging current was introduced.

Although the recommended charge replacement ratio was 140 percent, our test results showed that most cells actually operated with greater efficiency than this. Two cells programmed with charge replacement ratios of 122 and 130 percent showed no voltage decay after more than 300 days of operation. On the other hand, one cell programmed at 117 percent discharged in 140 days. For cells given adequate charge replacement, daily terminal voltage generally varied less than about 1 percent from the mean.

These tests showed that NiCd button cells were both reliable and versatile secondary charge storage devices for solar cell systems at moderate temperatures, although an occasional failure could occur. Most cells appeared capable of operating at a charge replacement ratio of only about 120 percent. Since circuits should not be designed without a safety factor, this low a

ratio cannot be recommended even for batteries that prove unusually efficient. The high efficiency does, however, provide an extra margin in designing a reliable system. None of the solar panels used in this laboratory test have given any indication of a malfunction.

Table 2. Results of testing NiCd button cell batteries in solar cell circuits providing daily charge and discharge.

Battery type	Charge time per day (hours)	Charge current (ma)	Load current (ma)	Charge replacement ratio (%)	Length of test (days)*
V0.080	6	8.9	2.52	117	140(D)
V0.080	3	5.3	0.63	122	306(C)
V0.080	6	1.2	0.28	145	348(C)
V0.080	3	5.2	0.28	270	14(T)
V0.080	6	11.1	0.27	1350	42(T)
B-50	3	1.8	0.4	60	31(D)
B-50	3	1.8	0.27	95	137(D)
B-50	6	2.9	0.74	130	311(C)
B-50	6	3.4	0.4	250	296(C)
B-50	6	3.3	0.28	396	60(T)
B-20	3	1.8	0.4	60	9(D)
B-20	3	2.6	0.27	138	127(D)
B-20	6	2.4	0.57	140	306(C)
B-20	6	3.8	0.32	155	287(C)
B-20	6	2.6	0.27	318	11(T)
B-20	6	5.3	0.27	653	230(C)

* C = test continuing, T = test terminated to start new experiment, D = test terminated because of battery discharge.

Tests of Mercuric Oxide Batteries as Secondary Sources

Mercuric oxide batteries, though primary cells, can be recharged to some degree. Since these cells have a higher storage capacity per unit weight than NiCd cells, 10 mercuric oxide batteries of two sizes (type E-312, 40 mah, 0.85 g, 0.01 cubic inch; and type E-675, 180 mah, 2.55 g, 0.03 cubic inch) were tested in the same test circuit arrangement as the NiCd cells. The results are given in Table 3.

Table 3. Results of testing mercuric oxide primary batteries in solar cell circuits providing daily charge and discharge.

Battery type	Charge time per day (hours)	Charge current (ma)	Load current (ma)	Charge replacement ratio (%)	Length of test (days)*	Cycle life**
E-312	3	1.2	0.27	63	6.5 (D)	1.0
E-312	6	1.0	0.28	119	32 (D)	4.5
E-312	6	1.5	0.28	179	10 (D)	1.5
E-312	6	1.6	0.28	191	53 (D)	7.4
E-675	3	1.6	1.00	23	13 (D)	1.8
E-675	3	2.3	0.50	66	44 (D)	2.9
E-675	3	2.1	0.28	104	162 (C)	
E-675	6	1.1	0.28	130	142 (D)	4.5
E-675	6	2.2	0.50	147	33 (D)	1.9
E-675	6	5.3	0.28	625	31 (D)	1.0

* C = test continuing, D = test terminated because of battery discharge.
** Cycle Life = the number of times the battery was effectively charged and discharged before destruction.

Although the mercury cells did in general accept recharging, only one had not eventually discharged and failed at the time of this writing, even with charge replacement ratios as high as 625 percent. The "cycle life" (the number of times a battery can effectively be charged and discharged before destruction and hence a measure of its recharging capability) was quite variable, but was typically 4.5 or less; the maximum was about 8.

Since mercury cells have about 7.5 times the energy capacity per unit weight of NiCd cells, multiplying by this figure gives a comparative basis for evaluating the recharging capability of the NiCd and mercury cell. Thus, the best rechargeable mercury cell tested has only about 30 percent of the life capacity available from an average NiCd system with cells producing the advertised cycle life of 200.

PRACTICAL DESIGN OF SYSTEMS FOR FIELD USE

Caged Bird Experiment

Even though simple solar cell circuits with NiCd cells can be designed to operate very efficiently in the laboratory, the question of importance to the wildlife biologist is whether they can adequately power biotelemetry equipment in the field. We obtained a partial answer to this question in an experiment with caged birds.

Methods.—Two starlings (*Sturnus vulgaris*) were each instrumented with a package containing a pulsed rf position-locating transmitter, a 1.5 g solar cell panel made up of five-51 C series-wired solar cells, a germanium diode, and a 20-mah NiCd button cell. One complete transmitter

weighing 6.1 g operated at an 11 percent duty cycle with an average input power of 0.5 mw. The second unit weighed 5.5 g and required 0.2 mw of input power for a 6 percent duty cycle. Each package was sealed with epoxy and attached to the bird's body with two insulated wire loops (Figures 4 and 5).

The two starlings were placed outdoors in a 25 x 30 x 33-inch cage equipped with three perches and a partial canvas canopy for protection from sun and weather. Buildings and walls near the cage shielded it from the sun before about 8:00 AM and after about 3:00 PM. This allowed monitoring of the transmitter during "dark" (noncharging) periods without waiting for nightfall, but gave no more than 7 hours of sunlight for battery recharging. The tests were conducted from April 20, through June 30, 1970, and air temperatures ranged from below freezing to about 85°F. Each transmitter was monitored 1-3 times a day during both dark periods and sunlight (when available) with a Johnson 350 DF receiver about 100 feet away from the cage.

Results.—The two transmitter packages operated quite differently. Throughout the test, both were found to be transmitting whenever monitored during periods of sunlight in the cage. However, the 0.5 mw transmitter operated during dark periods for only the first 2 days, the normal time a NiCd cell could be expected to power it without recharging. The 0.2 mw transmitter operated during dark periods for 30 days before its battery apparently discharged. The following week it operated only in sunlight, and then it resumed partial nighttime operation, which continued to the end of the test.

Under the conditions of this experiment, solar energy replacement in the 0.5 mw transmitter circuit was not adequate to provide a stored charge for full continuous operation. That in the 0.2 mw circuit was nearly adequate (the battery was discharged only about 30 percent of the time). When one considers only length of operation, both were superior to a circuit of similar weight powered by a primary battery. One must also take into the account that the behavior of the caged birds was far from normal. A great deal of their time was spent under the canopy avoiding contact with passing personnel.

Designs for Different Operational Requirements

The operation of these two transmitter packages illustrates one of the first practical questions that confront the circuit designer in field biotelemetry: How continuous does the transmitter's operation need to be, and how much weight and volume can be tolerated to achieve this level? Depending on his answer to this question, he may design his circuit in one of three ways.

For reliable, continuous operation, an "optimal" system would be required--one in which adequate power is always available to operate the electronic circuit, the battery uses its entire cycle life capacity, and the system fails only when the battery fails. Such a system would approach the idealized energy-balance equation, $I_C T_C = E I_L T_L$. However, in practical applications the charge replacement ratio (E) cannot vary freely but has a fixed minimum characteristic for the battery chosen. For NiCd cells, the necessary charge replacement ratio (E') is about

140 percent, so that an optimal system would require the average charge to at least equal 1.4 times the average load--that is, $I_C T_C > E' I_L T_L$. This would provide continuous operation under normal conditions, but such events as extended cloudy periods could drain the energy reserve enough to temporarily stop transmitter operation, as occurred with the 0.2 mw transmitter in the caged bird experiment. Adding enough extra capacity to cover such circumstances--that is, multiplying the right-hand side of the inequality by a safety factor (S)--would require more solar cells and/or higher-capacity batteries and added weight.

Because of the probable larger size of an optimal system, the biologist might sometimes prefer a smaller package in which transmitter operation was extended and generally continuous but not optimal and reliably continuous. In such "extended-life" systems, the designer fully intends to eventually discharge the battery, but the fact that some of the energy used by the transmitter is replaced by the solar cells each day means that operation can be extended well beyond that possible with a simple primary source. For these extended-life systems, the approximate factor by which the battery's capacity is extended (X) can be calculated by:

$$X = \frac{24}{T_L - T_C\left(\frac{1}{E'} \cdot \frac{I_C}{I_L}\right)}$$

(As earlier, T_L is assumed to equal $24 - T_C$. This equation gives a meaningful answer only when $I_C T_C < E' I_L T_L$, since otherwise the system would be "optimal.") Figure 6 illustrates the equation for $E' = 1.4$.

As an example, if a NiCd cell system were designed with an average charge time of 3 hours and an average ratio of charge current to load current of 8, the extension factor would be about 6. This means that a 20-mah NiCd cell would power the transmitter as long as a 120-mah primary source.

A third kind of circuit is possible when nighttime operation is not required. With this "intermittent" design, the battery stores very little energy and the transmitter stops operating at night or during other extended dark periods. This is essentially the mode that the 0.5 mw transmitter assumed in the caged bird experiment. However, a properly designed system of this type would include a voltage bias shut-off mechanism to prevent damage to the battery by turning off the transmitter when the battery voltage dropped to its recommended discharge point. Thus, in an intermittent system, as in an optimal one, the battery uses its entire cycle life capacity and the system can maintain indefinite operation if $I_C T_C > E' I_L T_L S$. Because it requires only a small capacity for energy storage, the intermittent system is potentially the smallest complete solar cell circuit. Its advantage over an even smaller circuit without a battery, in which the solar cell powers the electronics directly, is that it allows the transmitter to keep operating through brief dark periods--as, for example, when the instrumented animal stopped to feed in a shade area. For nothing more than daily location checks, of course, the circuit without the battery should be considered because of its light weight and reliability. Here at the Denver Center a solar panel has reliably powered a 1.5-volt rf beacon transmitter during the daylight hours each day since June 1967.

Practical Application of Energy-Balance Relationships

This discussion so far has assumed that in designing solar cell systems we are dealing with known variables. In actual field biotelemetry, however, at least one major parameter, the charge time (T_C), is essentially unknown. Not only are almost no data available on the amount of time that given species of animals may spend in the sunlight, but if such information were available it would be only a rough estimate of the behavior of individual animals under different environmental and weather conditions.

Obviously, this lack of knowledge must be overcome before a solar cell system can be designed on any rational basis. It would be possible to compensate by building a system with a very large safety factor, but only at the cost of greatly increased weight and volume. The trial and error process of testing various transmitter circuits on individual animals is inefficient at best. The most satisfactory solution would seem to be measuring the time spent in sunlight by a representative sample of the animal population that one is interested in monitoring. This could be done by attaching a simple, light-weight integrating coulometer circuit powered by a solar cell to sense the amount of time during which illumination is above a certain threshold. This information would therefore be stored on a device carried by the animal which could be read out by a clock timer circuit when the device was retrieved.

An operative circuit design for a 3-g integrating coulometer of this type is shown in Figure 7. With such an "illumination recorder," the average and range of light exposure could be determined for different ages

and sexes of animals at different seasons and under all normal environmental conditions. With this kind of information available for the target species and a knowledge of basic design principles such as those discussed here, the biologist should be able to design a reliable solar cell system to meet almost any set of requirements for field biotelemetry.

Bibliography

1. Cameron, D. B. "New Batteries--Progress or Confusion," Electronics World, (October 1961), pp. 33-36.

2. International Rectifier Corporation. Solar Cell and Photocell Handbook. Published by I.R.C., 1966.

3. International Rectifier Corporation. Experimenter's Handbook for Solar Cells. Booklet No. HB-99.

4. Kalman, J. "Designing Solar Power Supplies for Transistorized Radio Receivers," Hoffman Electronics Corporation, Evanston, Illinois.

5. Kuechle, L. B. "Batteries--For Biotelemetry and Other Applications," BIAC Information Module, M 10, February 1967.

6. Mandel, L. J. "How About a NiCd Battery as a Power Supply" Electronic Design News, (December 1965), pp. 54-55.

7. Radio Corporation of America. Phototubes and Photocells. Technical Manual PT-60, 1963.

8. Union Carbide Corporation. Eveready Battery Applications and Engineering Data. New York: Unitech Division Associated Educational Services Corp., 1968.

9. Zinder, D. A. "Fast-Charging Systems for NiCd Batteries," Electronic Design News, (January 15, 1970), pp. 65-67.

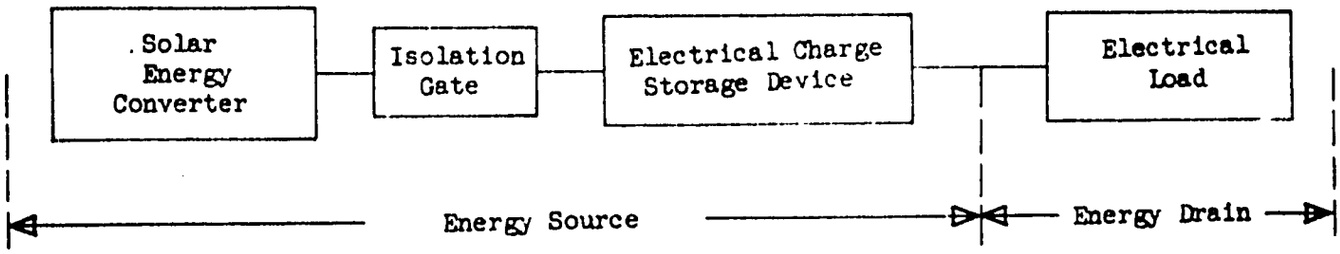

General Schematic of a Rechargeable Solar Cell System

Figure 1

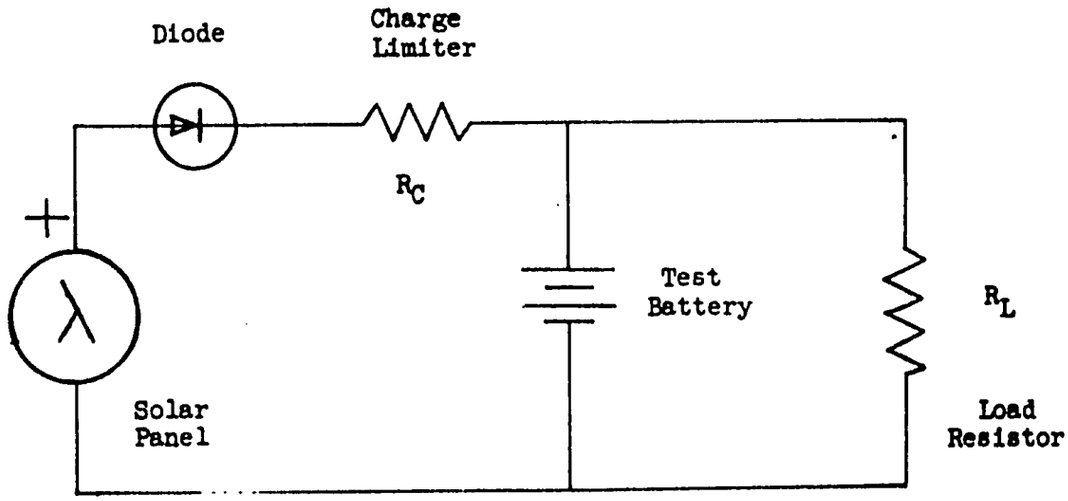

Solar Cell Circuit used for testing NiCd button cells cycled repeatedly through a daily charge and discharge

Figure 2

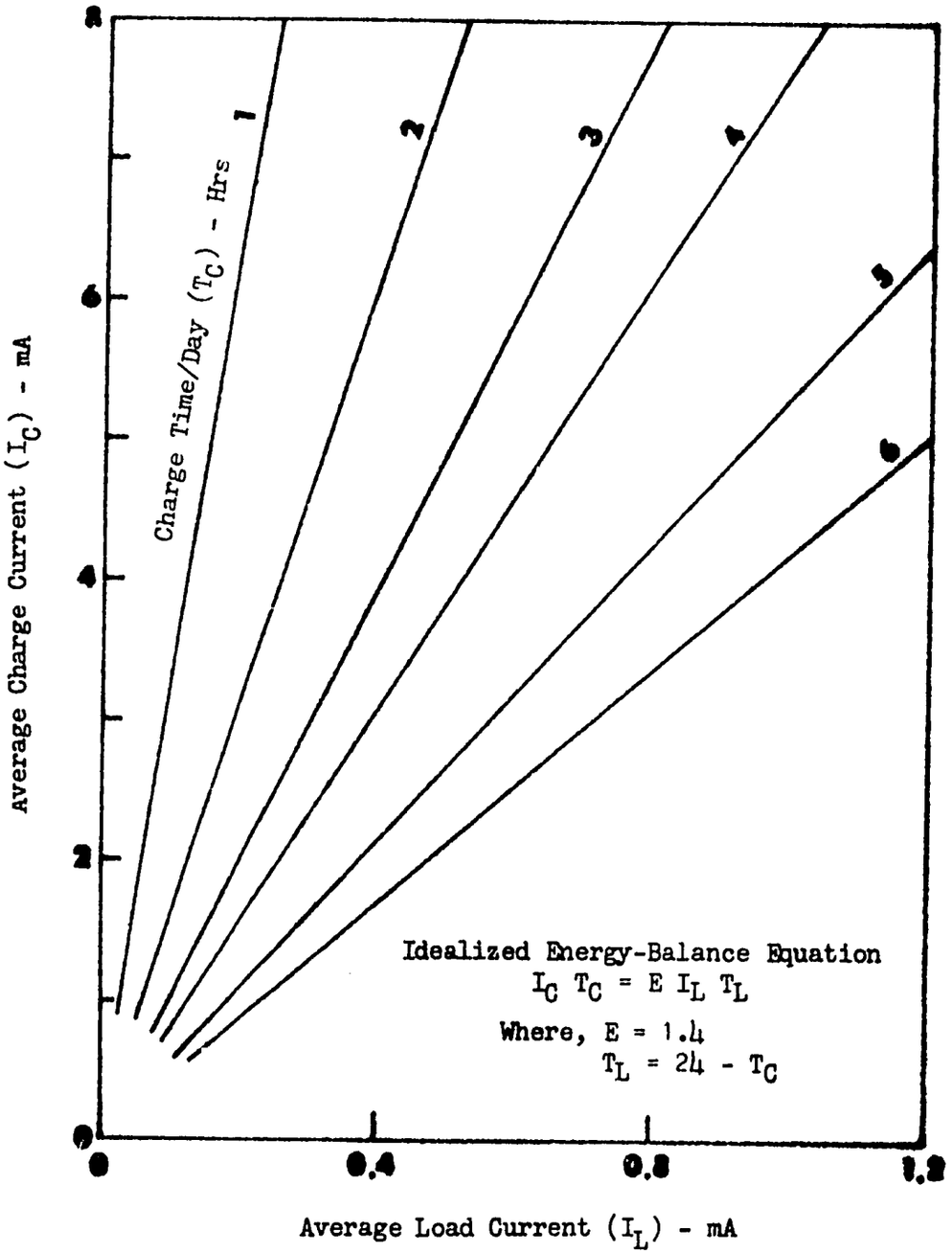
Charge Time/Day (T_C) - Hrs
1
2
3
4
5
6
Average Charge Current (I_C) - mA
0
2
4
6
8
Idealized Energy-Balance Equation
$I_C\ T_C = E\ I_L\ T_L$
Where, $E = 1.4$
$T_L = 24 - T_C$
0
0.4
0.8
1.2
Average Load Current (I_L) - mA

Figure 3

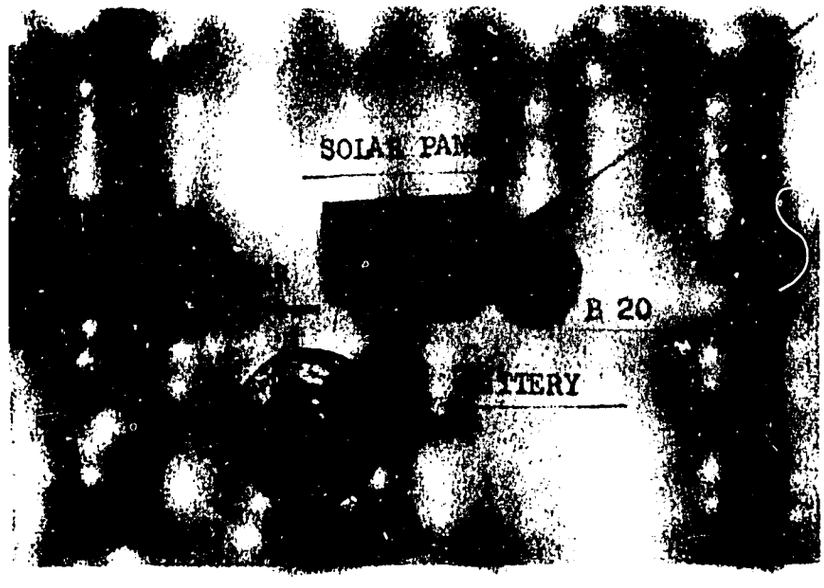

Five-gram instrument package containing a 30 MHz position-locating transmitter, NiCd battery, germanium diode, and panel of five-55 C solar cells.

Figure 4

Starling with instrumentation package attached
by two insulated wire loops.
(Similar to package shown in Figure 4 except
the solar panel is five-51 C cells)

Figure 5

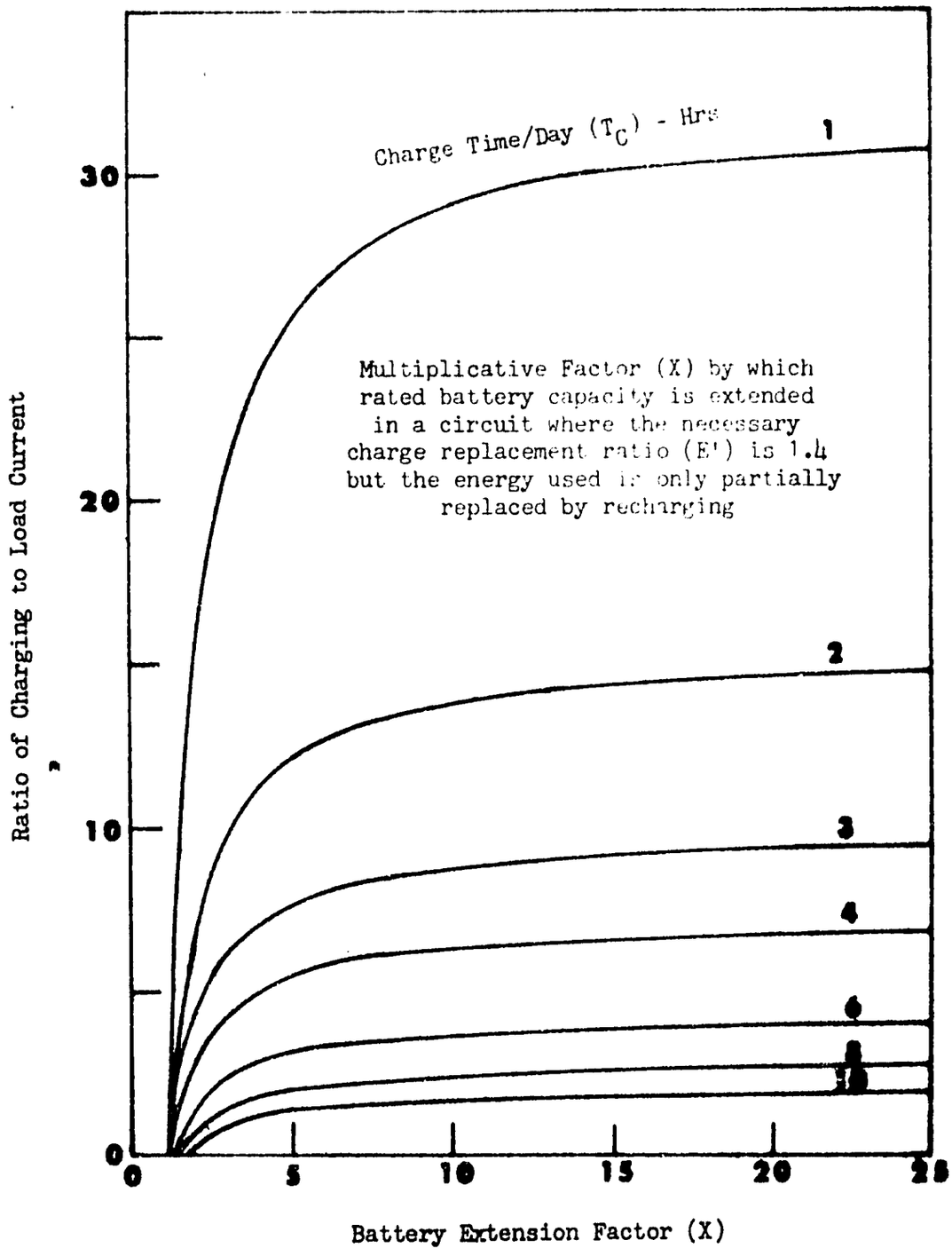
Charge Time/Day (T_C) - Hrs
1
2
3
4
6
8
10
Multiplicative Factor (X) by which rated battery capacity is extended in a circuit where the necessary charge replacement ratio (E') is 1.4 but the energy used is only partially replaced by recharging
Ratio of Charging to Load Current
30
20
10
0
0
5
10
15
20
25
Battery Extension Factor (X)

Figure 6

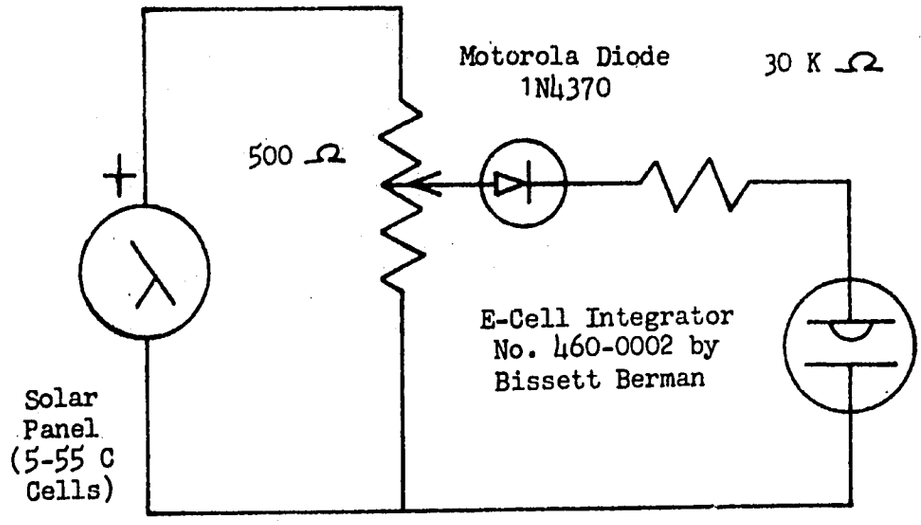

Schematic of a light sensitive device to measure the amount of time an instrumented animal spends in sunlight.

Figure 7