AGENCY FOR INTERNATIONAL DEVELOPMENT
WASHINGTON, D. C. 20523

BIBLIOGRAPHIC INPUT SHEET

FOR AID USE ONLY

1. SUBJECT CLASSIFICATION

A. PRIMARY: Agriculture — AF21-0000-0000

B. SECONDARY: Soil biology

2. TITLE AND SUBTITLE

Growth patterns of Fusarium Sp.under different concentrations of two urea derivative herbicides

3. AUTHOR(S)

Lopez,C.E.; Kirkwood,J.I.

4. DOCUMENT DATE: 1972

5. NUMBER OF PAGES: 11p.

6. ARC NUMBER: ARC 632.4.L864

7. REFERENCE ORGANIZATION NAME AND ADDRESS

Prairie View

8. SUPPLEMENTARY NOTES *(Sponsoring Organization, Publishers, Availability)*

(J. Tex.Agr.Exp.Station Progress rpt.PR-3132)

9. ABSTRACT

10. CONTROL NUMBER

PN-RAA-412

11. PRICE OF DOCUMENT

12. DESCRIPTORS

Fungi
Fusarium?
Herbicides
Urea

13. PROJECT NUMBER

14. CONTRACT NUMBER

CSD-2836 211(d)

15. TYPE OF DOCUMENT

AID 590-1 (4-74)

632.4
L864

Csd-2836
931-11-120-126

THE TEXAS AGRICULTURAL EXPERIMENT STATION / J. E. Miller, Director / Texas A&M University / College Station, Texas

PROGRESS REPORT

PR-3132
ovember 1972

GROWTH PATTERNS OF FUSARIUM SP. UNDER DIFFERENT CONCENTRATIONS OF TWO UREA DERIVATIVE HERBICIDES

C. E. Lopez and J. I. Kirkwood*

SUMMARY

A fungus of the genus *Fusarium* and several unidentified bacteria capable of growing in the presence of two urea-derivative herbicides, monuron [3-(P-chlorophenyl) - 1, 1-dimethyl urea] and diuron [3, (3,4-dichlorophenyl) - 1, 1-dimethyl urea], were isolated from the soil of the Prairie View A. and M. College farm.

The fungus grew best under concentrations of 10 and 20 micrograms per milliliter (ug/ml) of monuron in Czapek agar solution with yeast extract with no sugar added. With no yeast extract or sugar added, the best growth was at 2 ug/ml monuron.

INTRODUCTION

The persistence of some of the urea-derivative herbicides, mainly monuron [3-(P-chlorophenyl) - 1, 1-dimethyl urea] and diuron [3, (3,4-dichlorophenyl) - 1, 1-dimethyl urea], in soils has been of concern. In a study of 19 common herbicides, Audus (1) showed that monuron and diuron were the most persistent of the compounds studied. It has been shown that the breakdown of monuron in the soil is enhanced by conditions favorable to microbial development - warm temperature, sufficient soil moisture and an abundant amount of organic matter in the soil (5). Hill et al. (4) found that breakdown of these herbicides was faster in nonsterilized soil and concluded that the soil microflora were active in the decomposition of these compounds. Although some researchers have reported microbial metabolisms of these herbicides (3,4), Doxtader (2) indicated that little or no microbial breakdown of diuron occurred after 4 month's incubation in three western U.S. soils. Monuron is recommended as a preemergence herbicide in Texas for cotton; diuron is recommended for cotton, sorghum and Bermudagrass (7). An experiment was designed to isolate microorganisms from the soils of Prairie View A. and M. College farm which could use monuron or diuron as a carbon source and hence degrade these compounds.

---

*Graduate fellow, Tropical Soils Program, and professor and officer in charge, Texas A&M University - Prairie View Experiment Station, Prairie View.

Mention of a trademark or a proprietary product does not constitute a guarantee or warranty of the product by The Texas Agricultural Experiment Station and does not imply its approval to the exclusion of other products that may also be suitable.

A.I.D.
Reference Center
Room 1656 NS

MATERIALS AND METHODS

Samples from the top 6 inches of a Hockley fine sandy loam soil at the Prairie View A. and M. College farm were used. A representative sample of the soil was mixed and passed through a 10-mesh sieve. Approximately 25 gram (g) portions of the soil were taken for enrichment of microorganisms using a percolator (Figure 1) and Czapek nutrient solution to which no sugar was added. The sugar was replaced by 500 ug/ml of monuron or diuron. The percolator used was similar to that described by Sharp and Taylor (6). Four percolators were operated using a small aquarium air pump. The soil samples were enriched for 2 weeks, and then soil from the percolators was used to inoculate five petri plates for each herbicide used. The media consisted of Czapek agar solution, to which no sugar had been added, and a concentration of 20 ug/ml of monuron or diuron. These plates were incubated at 28° C. After 1 week, several bacteria and a fungus of the genus *Fusarium* were isolated.

In one experiment, Czapek agar solution without sugar but with 1 gram per liter of yeast extract was prepared and monuron or diuron was added to give concentrations of 0, 5, 10, 20, 50, 75 and 100 ug/ml (Table 1). The plates were then inoculated with a 5-millimeter plug of a 2-day-old culture of the fungus, and the concentrations were replicated four times. The plates were incubated at 28° C. The diameter of the colonies was measured at 24-hour intervals and used as an index of growth. A similar experiment was conducted using 0,2, 5, 10, 20 and 40 ug/ml of the herbicides and the same media with no sugar or yeast extract (Table 2). Measurements were taken at 12-hour intervals. Streptomycin was added at 30 ug/ml for bacterial control. The zero concentration for both herbicides in the two experiments was used as a check.

RESULTS AND DISCUSSION

Growth patterns of the fungus are shown in Figures 2, 3 and 4. The growth of the fungus at 48 and 96 hours in the first experiment (yeast extract added to the Czapek solution agar with no sugar) is shown in Figure 2. The growth patterns of the fungus in different concentrations of herbicides in the second experiment (without yeast extract and sugar added to the Czapek agar solution) are shown in Figures 3 and 4. The growth of the fungus versus time is shown in Figure 5.

With yeast extract the fungus grew better when the media contained up to 20 ug/ml of monuron as compared with the check (Figure 2). From Duncan's Multiple Range Test for the 5-percent level of significance (Table 1) it is apparent that after 48 and 96 hours the best growth is at concentrations of 10 and 20 ug/ml of monuron, since there is no significant difference between the growth at 10 and 20 ug/ml. The growth at the 5 ug/ml level is significantly less than at the 10 or 20 ug/ml levels. At some point beyond the 20 ug/ml level, retardation of growth sets in. The 75 and 100 ug/ml levels show a significant toxic effect of the chemical on the fungus.

No beneficial effect on growth was measured at any of the concentrations of diuron in which yeast extract was added to Czapek agar solution without sugar. Duncan's Multiple Range Test (test 1) indicates that the best growth occurs at the 0, 5, and 20 ug/ml levels. These levels do not result in any significant difference in growth. However, the 10, 50, 75 and 100 ug/ml significantly retarded growth.

When yeast extract was not added, the results were different (Figures 2 and 4). Best growth of the fungus was at 2 ug/ml for monuron. For diuron, best growth occurred at 2 ug/ml, except at the 96-and 108-hour intervals, where best growth occurred at 0, 2, and 5 ug/ml concentrations. Duncan's Multiple Range Test indicates that with the exception of the 96-and 108-hour periods, the 2 ug/ml level results in a significantly higher growth of the fungus than any other level. All other levels significantly retarded growth, in most cases below that of the check (Table 2). Although the data are not conclusive, it is possible that the stimulation of growth by the addition of these herbicides at the 2 ug/ml level may be due to the fungus using the herbicides as sources of carbon. However, the fungus also may be getting some carbon from the agar. Growth rate of the fungus at 2 ug/ml of monuron was higher than that of the check (Figure 5).

Further tests using liquid cultures to determine the nature of the breakdown products are presently underway. The results of these investigations should substantiate whether the *Fusarium* sp. can use monuron and diuron as a carbon source under certain conditions.

ACKNOWLEDGMENT

This report is a contribution to Hatch Project No. 1812, "Interactions of Herbicides with Soil Microorganisms."

LITERATURE CITED

1. Audus, L. J. Herbicide Behavior in the Soil. In L. J. Audus edition of *The Physiology and Biochemistry of Herbicides.* Academic Press, 1964, p. 164.

2. Doxtader, K. G. 1969. Soil, Pesticides and Quality of Water. (Unpublished report).

3. Hill, G. D. 1956. Soil Factors as Related to Herbicide Action. (Paper presented at the Charter Meeting of the Weed Society of America, New York, Jan. 1956).

4. Hill, G. D., J. W. MacGahen, H. M. Baker, D. W. Finnerty and C. W. Bingeman. 1955. The Fate of Substituted Urea Herbicides in Agricultural Soils, Agro. Jour. 47:93.

5. Loustalot, A. J., T. J. Muzik and H. J. Cruzado. Persistence of CMU in Soil. Agri. Chem. 8:52-53, 99-101, 1953.

6. Sharp, R. F., and B. P. Taylor. 1969. A New Soil Percolator for the Elective Culture of Soil Organisms. Soil Biol. Biochem., Vol. 1:191-194.

7. Suggestions for Weed Control with Chemicals. 1971-72. Texas Agricultural Extension Service and The Texas Agricultural Experiment Station Bulletin 1029.

TABLE 1

Effect of Different Concentrations of Herbicides On Growth of Fusarium spp. on Czapek Agar with Yeast Extract and No Sugar

Monuron, 48 hr		Monuron, 96 hr	
Conc. (ug/ml)	Mean (mm)	Conc. (ug/ml)	Mean (mm)
10	29.8a	10	58.4a
20	28.8a	20	58.2a
50	25.4b	5	51.0b
0	25.0bc	50	49.0bc
5	24.6bc	0	47.6c
75	23.0c	75	43.2d
100	17.4d	100	38.6e

Diuron, 48 hr		Diuron, 96 hr	
Conc. (ug/ml)	Mean (mm)	Conc. (ug/ml)	Mean (mm)
0	25.0a	0	47.6a
20	24.4a	10	47.6a
5	24.2a	5	47.0a
10	23.0b	20	45.0a
50	18.6c	50	40.6b
75	15.4d	75	35.4c
100	14.cd	100	27.ad

TABLE 2

Effect of Different Concentrations of Herbicides On Growth of Fusarium spp. on Czapek Agar Without Yeast Extract and Sugar

Monuron, 36 hr		Monuron, 48 hr	
Conc. (ug/ml)	Mean (mm)	Conc. (ug/ml)	Mean (mm)
2	18.75a	2	26.00a
5	18.50ab	0	24.50b
10	17.75bc	5	24.50b
20	17.50c	20	24.50b
40	17.50c	40	24.50b
0	17.25c	10	23.75b

*D.M.R. Test at 5% level - Figures not followed by same letters in same column are significantly different.

Table 2 continued.....

Monuron, 60 hr

Conc. (ug/ml)	Mean (mm)
2	34.25a
5	33.25b
20	31.50bc
40	31.50bc
0	31.25bc
10	30.50c

Monuron, 72 hr

Conc. (ug/ml)	Mean (mm)
2	40.75a
5	30.00b
0	37.75bc
20	37.75bc
40	37.75bc
10	37.00c

Monuron, 84 hr

Conc. (ug/ml)	Mean (mm)
2	47.50a
5	45.75b
20	44.75c
0	44.50c
40	44.50c
10	43.50d

Monuron, 96 hr

Conc. (ug/ml)	Mean (mm)
2	54.00a
5	52.00b
0	51.75bc
10	51.25bc
20	50.50c
40	50.50c

Monuron, 108 hr

Conc. (ug/ml)	Mean (mm)
2	61.50a
0	58.50b
5	58.50b
10	57.25bc
40	56.75c
20	56.50c

Diuron, 36 hr

Conc. (ug/ml)	Mean (mm)
5	18.25a
0	17.50ab
2	17.50ab
10	17.25b
20	17.25b
40	14.25c

Diuron, 48 hr

Conc. (ug/ml)	Mean (mm)
2	25.50a
5	25.00a
0	24.00b
10	24.00b
20	23.50b
40	18.25c

Diuron, 60 hr

Conc. (ug/ml)	Mean (mm)
2	32.50a
5	31.75b
0	31.00c
10	31.00c
20	29.75d
40	24.00e

---

*D.M.R. Test at 5% level -- Figures not followed by same letters in same column are significantly different.

Table 2 Continued.....

Diuron, 72 hr

Conc. (ug/ml)	Mean (mm)
2	39.00a
5	38.25a
10	38.00ab
0	37.00b
20	35.25c
40	29.00d

Diuron 84 hr

Conc. (ug/ml)	Mean (mm)
2	46.50a
5	45.00b
0	44.50bc
10	43.50d
20	42.00e
40	33.00f

Diuron, 96 hr

Conc. (ug/ml)	Mean (mm)
2	51.75a
5	51.50a
0	51.50a
10	48.50b
20	45.75c
40	37.00d

Diuron, 108 hr

Conc. (ug/ml)	Mean (mm)
2	57.75a
0	57.50a
5	57.25a
10	54.50b
20	51.50c
40	41.50d

*D.M.R. Test at 5% level - Figures not followed by same letters in same column are significantly different.

PR-3132

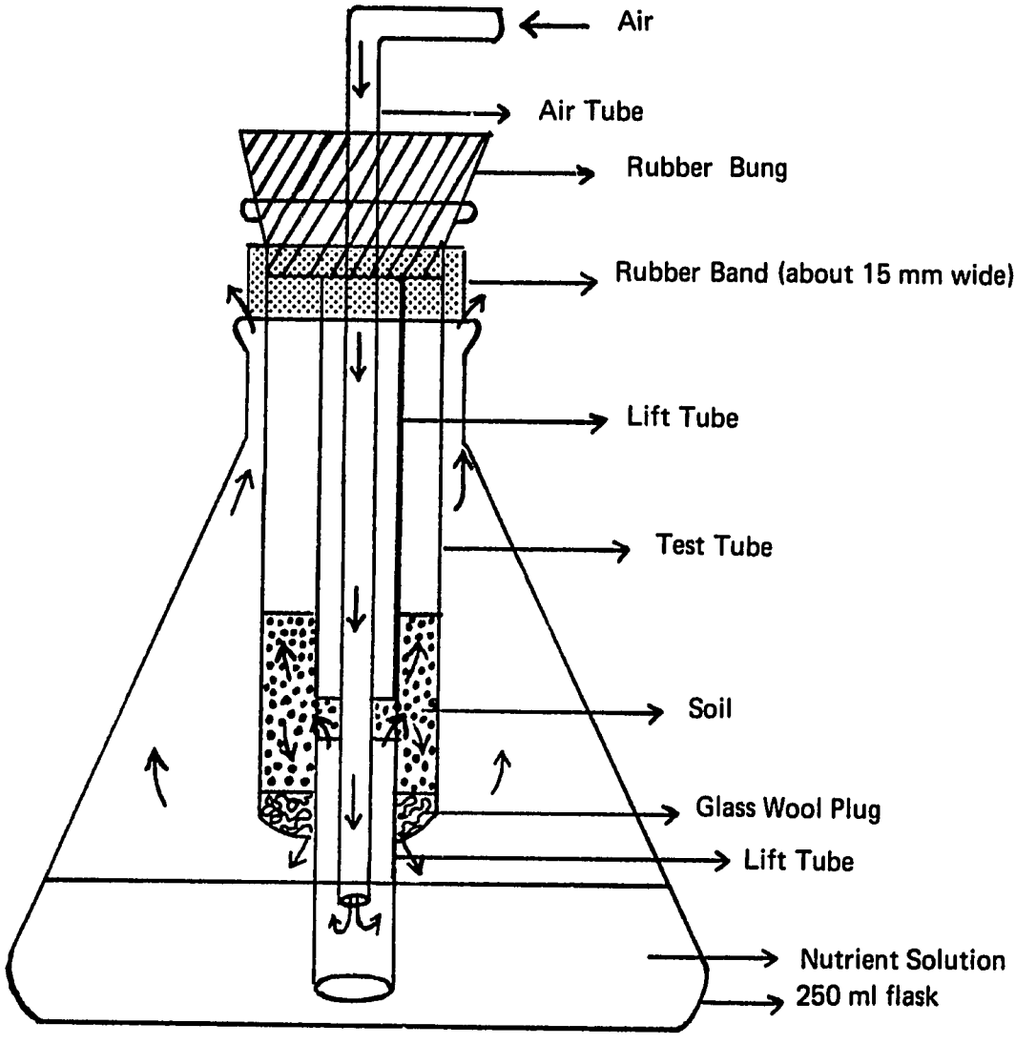

Figure 1. Sketch of Percolator

PR-3132

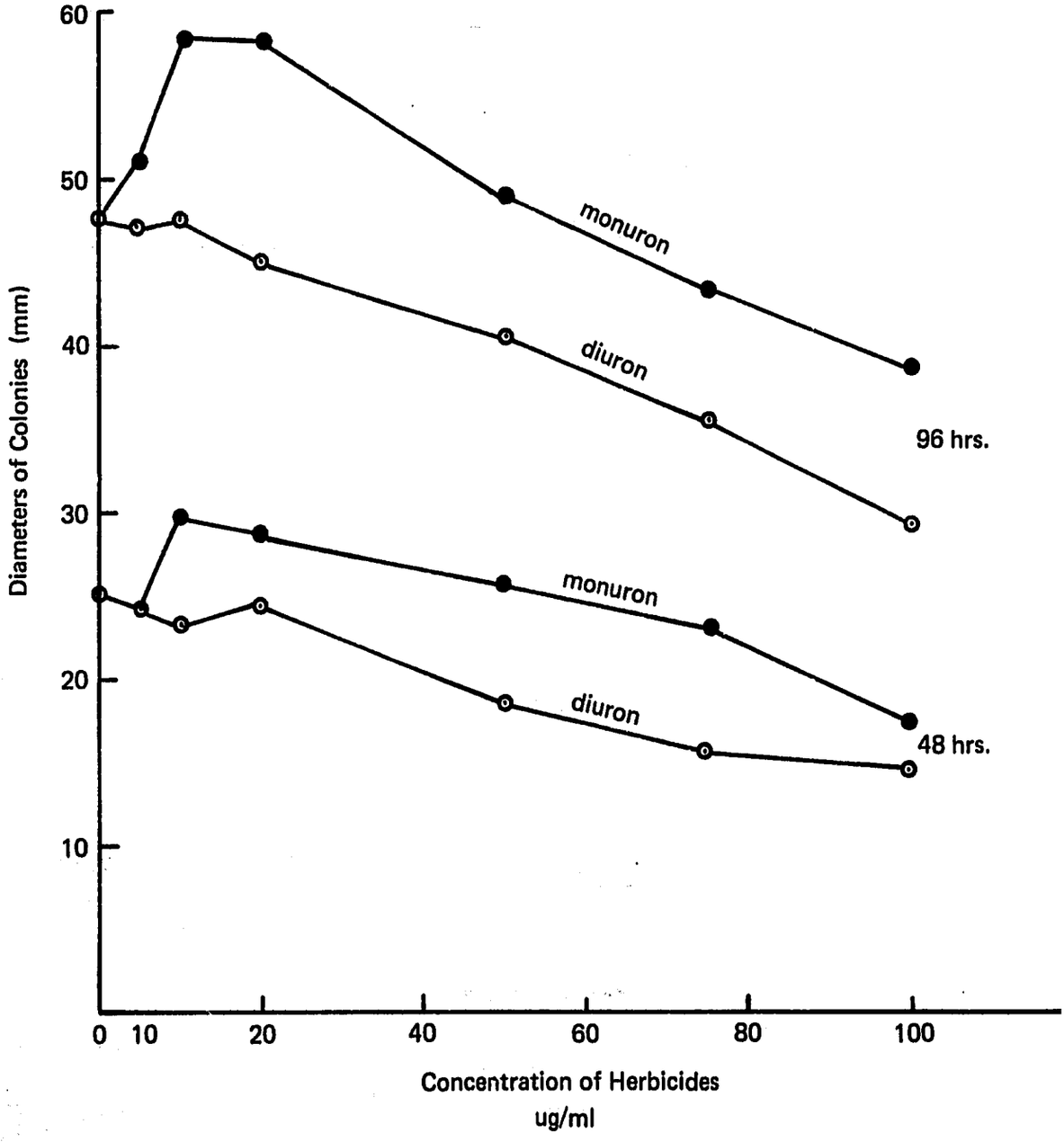

Figure 2. Effect of different concentrations of herbicides on growth of *Fusarium* spp. on Czapek agar with yeast but without sugar.

PR-3132

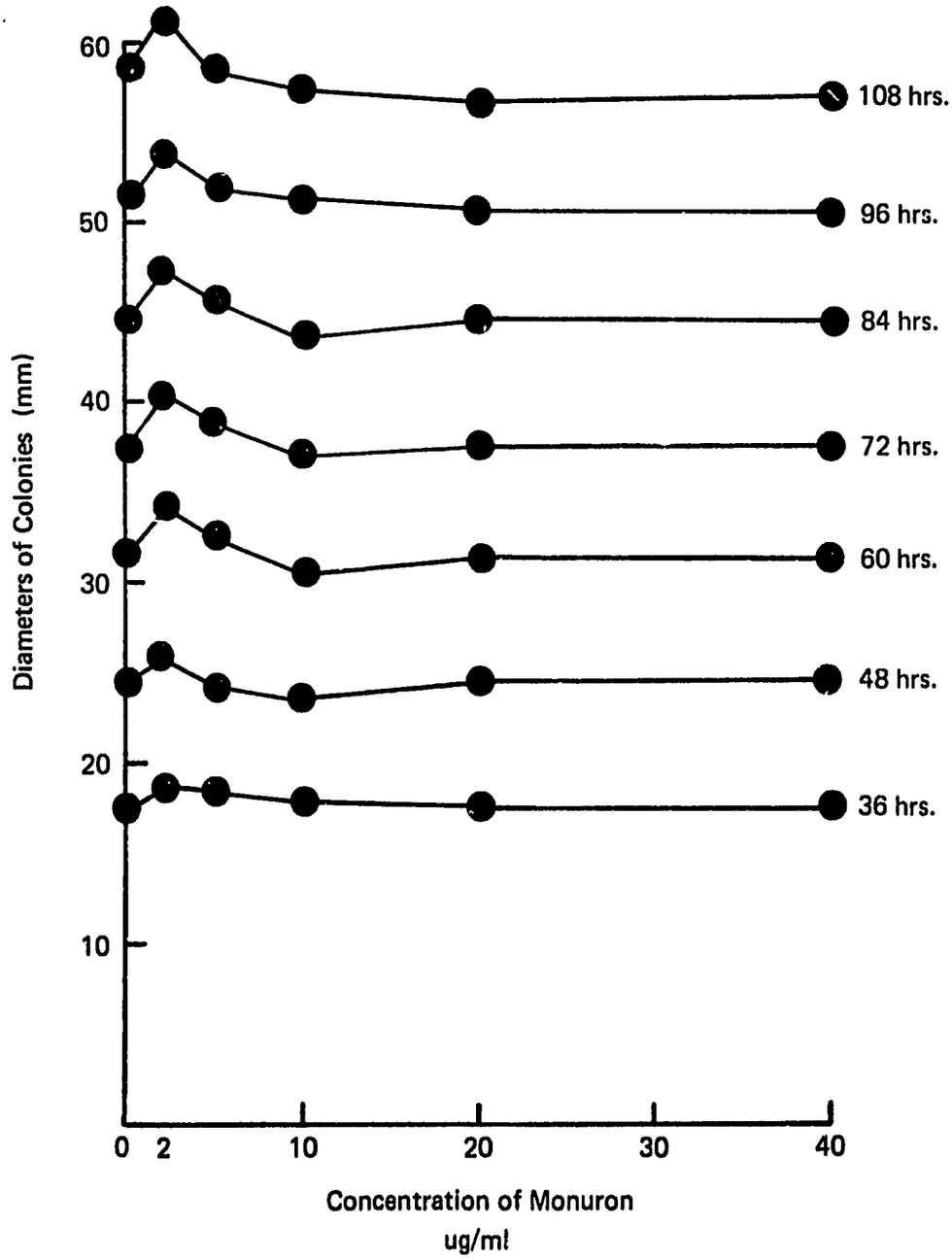

Figure 3. Effect of different concentrations of Monuron on growth of *Fusarium* spp. using Czapek agar without yeast extract or sugar.

PR-3132

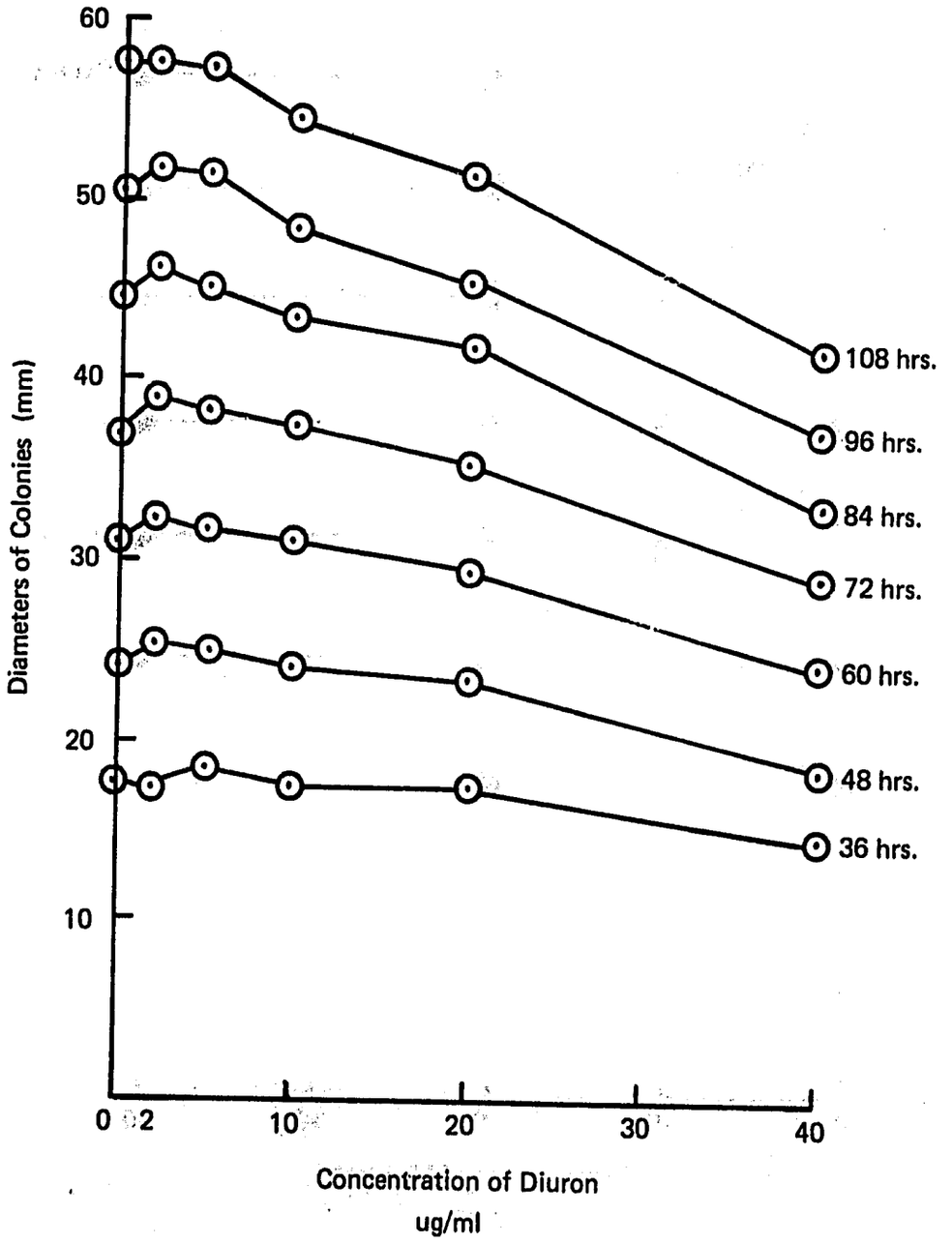

Figure 4. Effect of different concentrations of Diuron on growth of *Fusarium* spp. using Czapek agar without yeast and sugar.

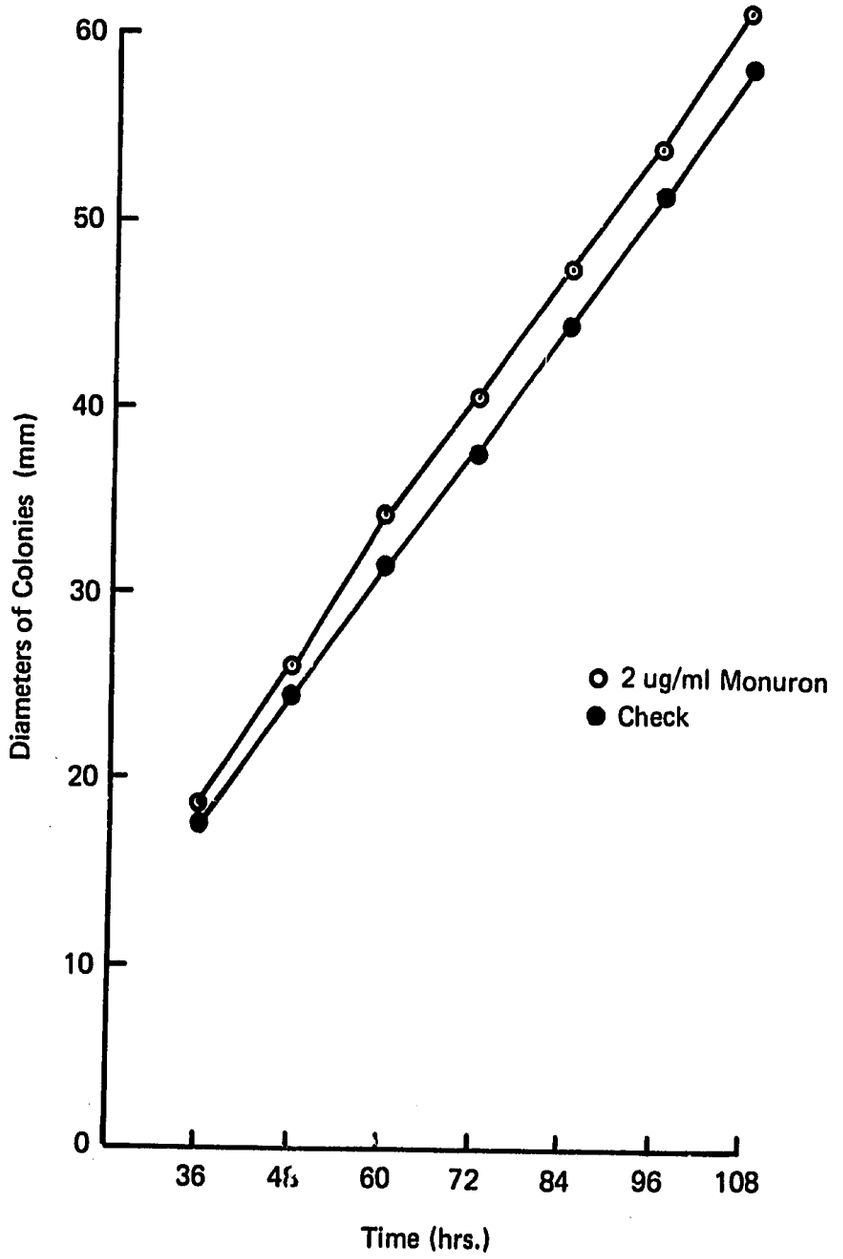

Figure 5. Growth of *Fusarium* spp. on Czapek agar without yeast extract and sugar.