AGENCY FOR INTERNATIONAL DEVELOPMENT
WASHINGTON, D. C. 20523

BIBLIOGRAPHIC INPUT SHEET

FOR AID USE ONLY

1. SUBJECT CLASSIFICATION

A. PRIMARY: Agriculture — AF25-0000-0000

B. SECONDARY: Soil fertility,fertilizers,and plant nutrition

2. TITLE AND SUBTITLE

Design of equipment to produce phosphoric acid from elemental phosphorus

3. AUTHOR(S)

Allgood,H.Y.; Lancaster,F.E.; Young,R.D.; Davis,C.H.

4. DOCUMENT DATE	5. NUMBER OF PAGES	6. ARC NUMBER
1970	38p.	ARC

7. REFERENCE ORGANIZATION NAME AND ADDRESS

TVA

8. SUPPLEMENTARY NOTES (Sponsoring Organization, Publishers, Availability)

(In NFDC bul.Y-5)

9. ABSTRACT

10. CONTROL NUMBER

PN-RAA- 203

11. PRICE OF DOCUMENT

12. DESCRIPTORS

Machinery
Phosphoric acids
Phosphorus

13. PROJECT NUMBER

14. CONTRACT NUMBER

PASA TA (QA) 6-69 GTS

15. TYPE OF DOCUMENT

AID 590-1 (4-74)

TENNESSEE VALLEY AUTHORITY
June 1970

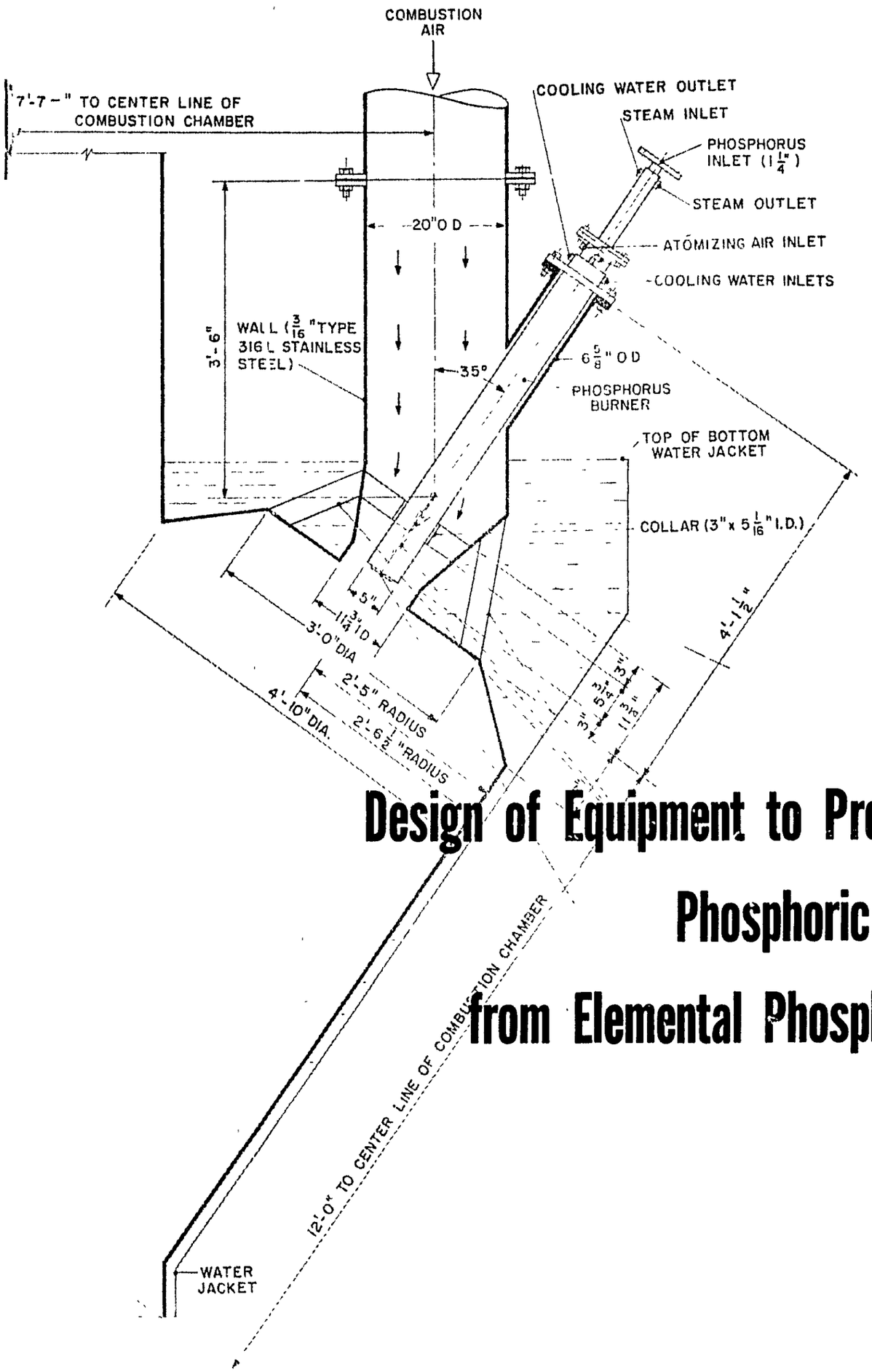

Design of Equipment to Produce Phosphoric Acid from Elemental Phosphorus

Prepared for the

AGENCY FOR INTERNATIONAL DEVELOPMENT

By H. Y. Allgood, F. E. Lancaster, Jr., R. D. Young, and C. H. Davis
National Fertilizer Development Center, Muscle Shoals, Alabama

TABLE OF CONTENTS

INTRODUCTION 3

PROCESS AND EQUIPMENT DESCRIPTION 3
Chemical reactions 3
Equipment 3
Process flows 4

DESIGN CRITERIA 8
General 8
Feed materials 9
Phosphorus combustion chamber 13
P_2O_5 Hydrator 17
Acid cooler 17
Acid mist recovery 21
Piping and pumps 23
Cooling water 25
Process instrumentation 25
Safety 27

OPERATING PROCEDURES 31
Preparation 31
Startup 31
Routine 31
Shutdown 31
Inspection and maintenance 31

USE OF SUPPLEMENTAL WET-PROCESS ACID 32

SURVEY OF COMMERCIAL PRACTICE OF THERMAL PHOSPHORIC ACID PRODUCTION 32
Location and capacity of operating plants 32
General economics and prospects 32
Operating costs for thermal acid plant 32

REFERENCES 35

FIGURES

Page

1 Process flow diagram 4
2 Perspective view 5
3 North view of TVA's No. 7 phosphoric acid unit during construction 6
4 Southeast view of TVA's No. 7 phosphoric acid unit during construction 7
5 Phosphorus feed system—displacement..... 10
6 Phosphorus feed system—pump 12
7 Combustion chamber 14
8 Phosphorus atomizing burner—details of construction 15
9 Burner in chamber 16
10 Hydrator 18
11 View of center and wall spray nozzles in top of hydrator 19
12 Product acid cooler 20
13 Venturi 22
14 Separator 23
15 Dilute acid receiver 24
16 System for feeding sulfuric acid to process cooling water 26
17 Process flow diagram with instrumentation 28
18 Control console for TVA's No. 7 phosphoric acid unit 30
19 Phosphoric acid annual production 32
20 The effect of plant capacity on plant investment cost (battery limits) 33

TABLES

Page

1 Location of thermal acid plants 33
2 Estimated production cost for thermal acid in a developing country using imported phosphorus ... 34

INTRODUCTION

There are two major processes for production of phosphoric acid—the wet process and the thermal process. In the wet process, phosphate rock is reacted with sulfuric acid to give phosphoric acid and gypsum, which is removed by filtration. In the thermal process elemental phosphorus, which is produced by reduction of phosphate rock in an electric furnace, is oxidized and hydrated to phosphoric acid. The wet process yields a lower purity acid product, but costs of production are usually lower. Because of the lower cost, practically all phosphoric acid used in production of fertilizers to date has been from the wet process. However, it is predicted (1,2) that thermal acid costs will likely decrease in the future, relative to wet-process acid costs. and this will result in increasing use of thermal acid for fertilizer production.

Several factors are likely to contribute to increased use of thermal acid in future fertilizer production. Some of these are:

1. No sulfur is required.
2. Cost-reducing improvements in technology including economies of larger scale operation are likely.
3. Cost of electricity is likely to decline due to the development of advanced nuclear reactors.
4. Low grade rock phosphate can be utilized.
5. Costs of handling and transport are minimized because of the high nutrient content of elemental phosphorus (equivalent to 229% P_2O_5).
6. Fluid products made from thermal acid have higher concentrations and a premium quality.

The ability to utilize low grade rock and the lack of any sulfur requirement makes the thermal process particularly attractive for some developing countries, such as India, which have low grade rock phosphate and have no significant domestic elemental sulfur supplies. The use of the domestic phosphate rock in the thermal process would allow substantially decreased foreign exchange outlay.

Because of the potential future importance for production of fertilizer phosphorus by the thermal route, USAID requested and financed this study on the technology of burning and hydrating phosphorus to produce phosphoric acid. Other joint TVA–AID studies related to this study are as follows:

1. *Economic and Technical Evaluation of Overseas Shipment and Utilization of Elemental Phosphorus for Fertilizer Production.*
2. *Economic Evaluation of Overseas Shipment and Utilization of Phosphoric Acid for Fertilizer Production.*
3. *Technical and Economic Evaluation of Fertilizer Intermediates for Use by Developing Countries.*

PROCESS AND EQUIPMENT DESCRIPTION

Chemical Reactions

The thermal process makes phosphoric acid by burning elemental phosphorus with air to form P_2O_5, hydrating the P_2O_5 with acid or water to form phosphoric acid, and recovering product of a desired strength between 54% and 83% P_2O_5 (75%-115% H_3PO_4). The reactions are:

1. $P_4 + 5O_2 \rightarrow 2P_2O_5$
2. $P_2O_5 + 3H_2O \rightarrow 2H_3PO_4$

An air excess of 15% to 25% in an efficient burner unit ensures complete combustion in reaction 1. Dilute acid, strong acid, or water hydrates and dissolves P_2O_5 to form product phosphoric acid. Scrubbing equipment efficiently recovers acid mist from hydrator outlet gas and thereby prevents loss of P_2O_5 that would pollute the atmosphere.

Equipment

Major process equipment usually comprises:

*A combustion chamber where air atomizes and burns the liquid phosphorus and where jacket-cooling water absorbs reaction heat—a protective film of metaphosphoric acid forms on the chamber wall.

*A hydrator where the acid or water hydrates P_2O_5 vapor and recovers part of it in acid and where recycle product acid and jacket water absorb heat.

*A venturi scrubber where recycle dilute acid coalesces the acid mist in the gases from the hydrator and where jacket-cooling water removes heat.

*A separator tower containing a cyclone and mist eliminators that recover the remainder of acid from the gas.

Auxiliary equipment includes systems for storing and feeding phosphorus, filtering and compressing combustion air, controlling atomizing air, cooling and recycling product acid, feeding and recycling dilute acid, treating cooling water, and storing and pumping product acid. Raw materials are: phosphorus, air, and water. A small amount

of aqua ammonia is needed for neutralizing blanket water over the phosphorus, and a little sulfuric acid is normally used to adjust the pH of the raw cooling water to prevent scale formation. Services required are compressed air (for atomizing phosphorus and for operating pneumatic instruments), filtered water (for hydrating P_2O_5), process water (for cooling), steam (for heating), and electricity.

Process vessels, ducts, and pipes exposed to hot acid or P_2O_5-laden gas are made of A.I.S.I. Type 316L stainless steel; water pipes and jackets are made of A.I.S.I. Type 304 stainless steel that resists attack by cooling water with pH 5 to 6. Allgood, Lancaster, McCollum, and Simpson (3) and Striplin (4) have described equipment as well as main operating variables in a similar, superphosphoric acid plant equipped with two combustion chambers instead of one.

Process Flows

Figure 1 is a schematic diagram of TVA's latest (No. 7) acid unit; figure 2 gives a perspective view; and figures 3 and 4 are photographs of this unit. Major process equipment was built and installed by a contractor (5).

Water displaces liquid phosphorus (160° F) at a controlled rate from a feed tank through hot-water-jacketed piping to a burner unit in the combustion chamber. Air at 10 to 20 pounds per square inch gage (psig) flows through a gap between the phosphorus jet and tip of the burner where it meets and breaks the stream of phosphorus into very fine particles.

Combustion air flows through a filter, a centrifugal blower, and thence through a nozzle around the burner to the combustion chamber where it burns the phosphorus particles. Phosphorus burns with a flame temperature between 3,000° and 5,000° F, depending on the percentage of excess air. Combustion gas containing P_2O_5 vapor, nitrogen, and excess oxygen flows downward against the bottom of the combustion chamber where it vaporizes any excess metaphosphoric acid; then it turns and flows upward, losing heat through the water-cooled shell, and

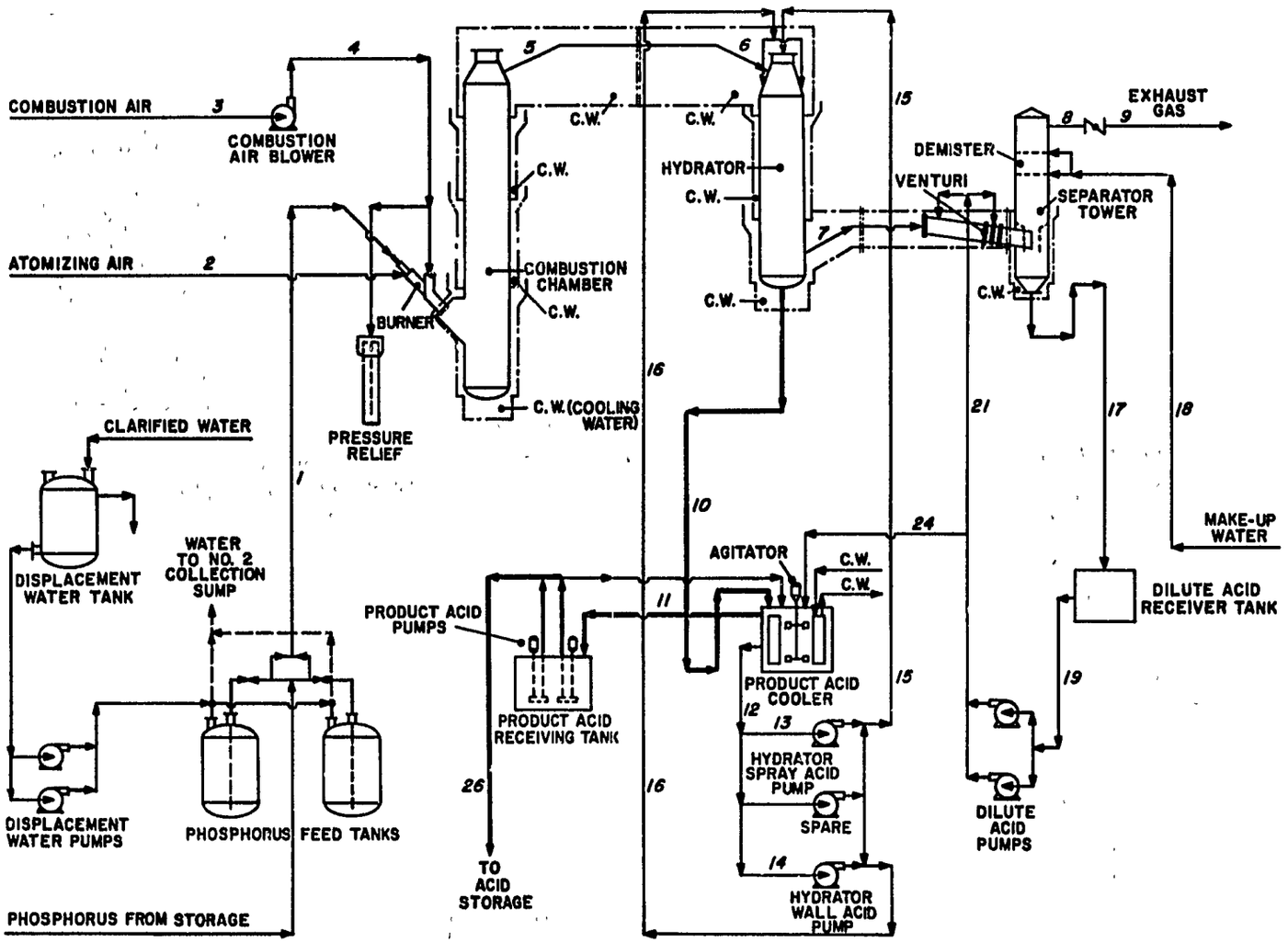

Figure 1. Process Flow Diagram

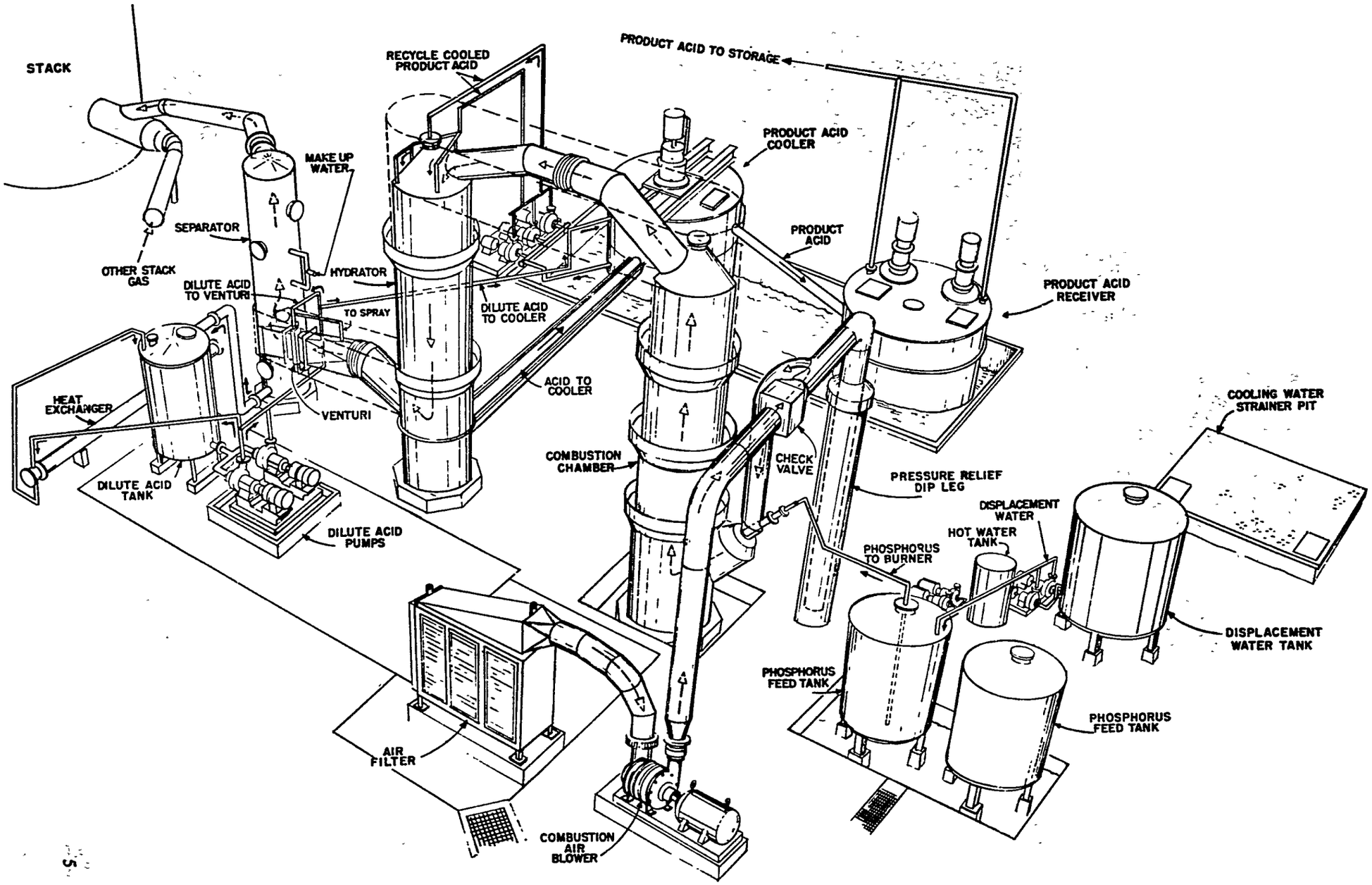

Figure 2. Perspective View of Phosphoric Acid Unit

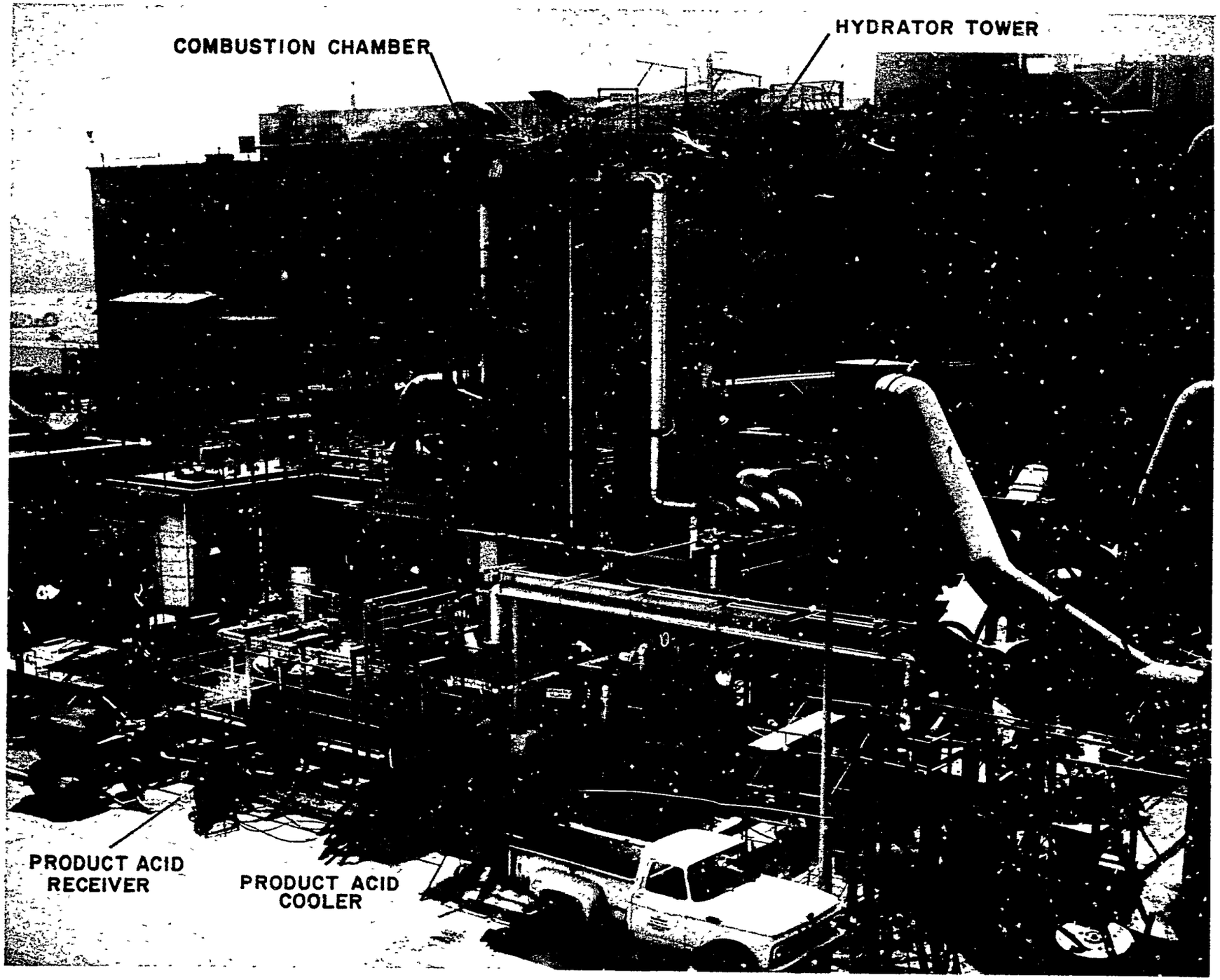

Figure 3. North View of TVA's No. 7 Phosphoric Acid Unit During Construction

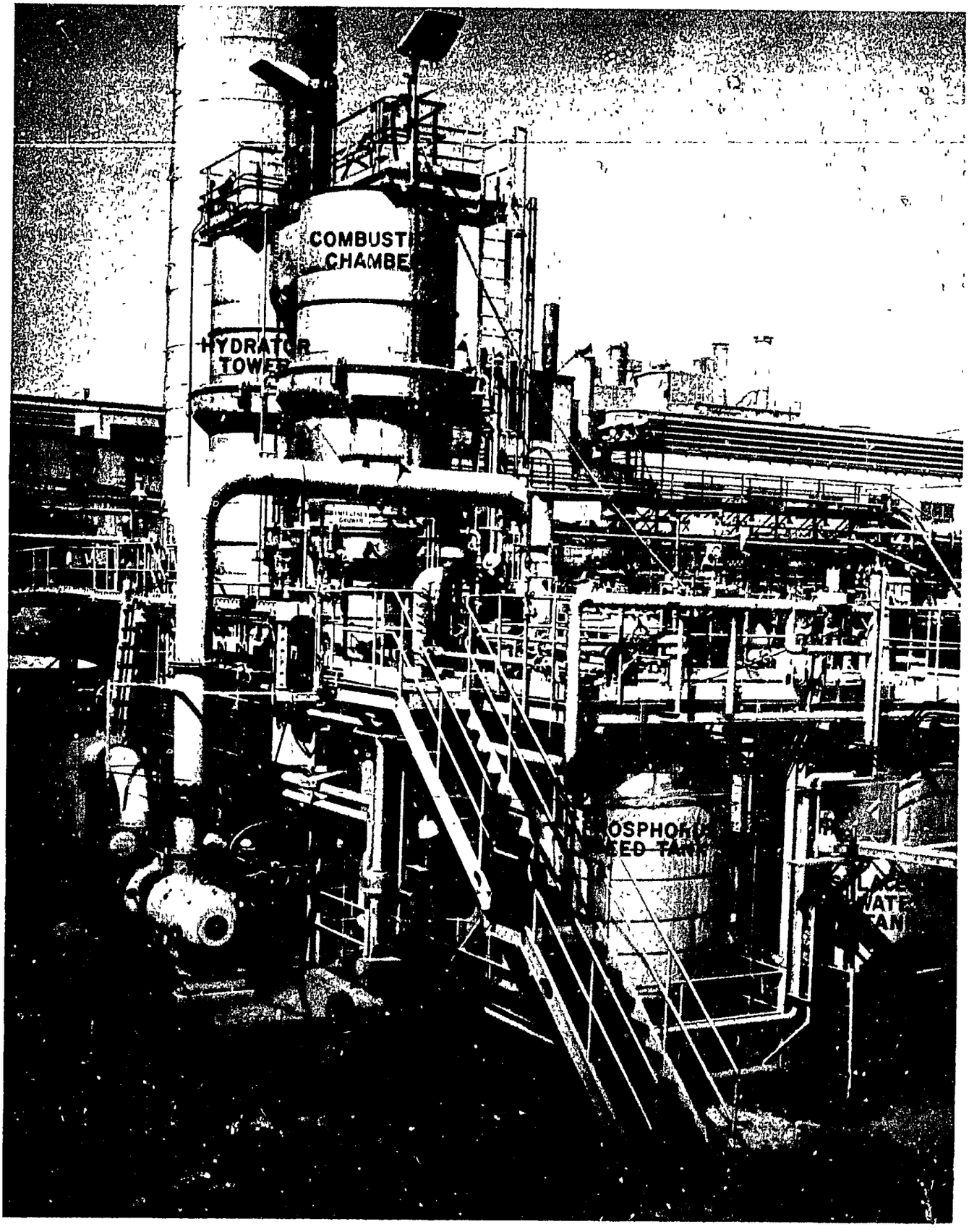

Figure 4. Southeast View of TVA's No. 7 Phosphoric Acid Unit During Construction

leaves the chamber through a water-cooled duct near the top and flows to the hydrator.

The gas enters the hydrator at about 1,650° F and flows downward through a spray of recycle-cooled product acid that hydrates and partially absorbs P_2O_5 and heat from the gas stream. Recycled product acid is sprayed on the walls of the vessel to form a protective film and lower the temperature of acid leaving the hydrator. Acid at a temperature of 200° to 350° F, collects in the bottom of the vessel and drains through a gas seal into the acid cooler. Gas at about 500° F containing about half of the P_2O_5 input as acid mist leaves through a duct connecting the bottom of the hydrator to the venturi scrubber.

Gas and acid mist flow through the venturi scrubber where a spray of dilute acid, a decrease in pressure, and jacket-water cool the gas to between 160° and 180° F, and coalesces the acid mist. The acid flow is 15 to 25 gallons (gal) per 1,000 cubic feet (cu ft) of gas and the pressure decrease across the venturi throat is 35 to 60 inches (in) of water.

The cooled gas and coalesced acid flow into the separator tower where a cyclone removes the acid. As the gas flows upward through the tower, a spray of makeup water and two mesh-type mist eliminator pads in series remove any remaining acid droplets. This makeup water and a small amount of moisture in the combustion air supply all the water for P_2O_5 hydration in the process.

From the separator, clean gas at 130° to 150° F flows into a vent stack. Dilute acid drains from the separator tower through a gas seal to a receiver tank from which it is either pumped to the venturi scrubber or to the product acid cooler.

Cooling water flows through Platecoils in the product acid cooler and is also sprayed on the outside of the tank to keep the acid at temperatures of 200° to 250° F, depending on its strength. Mechanical mixing is utilized to improve heat transfer. A metered flow of dilute acid into the cooler tank controls the strength of product acid. Acid is recycled from the cooler to the hydrator where it absorbs P_2O_5 and heat. Acid overflows from the cooler to a product receiver.

DESIGN CRITERIA

Process flows and equipment for production of phosphoric acid may vary somewhat in different plants. This section covers feed, process, and fabrication of equipment in a TVA acid plant, but also gives some alternatives.

General

The designing of vessels and ducts for the continuous, effective cooling of metal exposed to hot gas and acid is a major criterion for a durable plant of stainless steel construction. Cooling water (or other medium) should be available at constant pressure to supply all plant cooling demands. Deposition of dissolved or suspended solids on heat-transfer surfaces, and stress corrosion cracking of the stainless steel must be prevented. A turbulent flow of cooling water should be directed across every square inch (sq in) of metal exposed to hot process liquids or gases. Supplemental water should be applied to any surface where gas bubbles might collect. Sheet metal in vessels and ducts should be joined edge to edge and not overlapped.

Early in the planning stage for a new acid plant the builder must decide whether to:

1. Recycle or discard cooling water.
2. Feed phosphorus by displacing it with water or by pumping it.
3. Move the gas through the plant by forced or induced draft.
4. Pass gas concurrently with or countercurrently to liquid streams in vessels.
5. Drain the acid by gravity flow or pump from vessels to coolers or receivers.
6. Provide usual scrubbing equipment to recover about 99.9% or to recover more of the P_2O_5 from stack gas.
7. Dispose of sludge or return it to the phosphorus producer for recovering the phosphorus content. (Phosphorus usually contains less than 2% of impurity that separates and accumulates as sludge between the phosphorus and its blanket water in feed tanks.)

Selecting the thickness of the process vessel walls is of major importance. Tests made in TVA acid plants indicate that well-cooled metal corrodes less than 10 mils/year. Calculations indicate that walls less than 0.1 in thick would be structurally sound for a pressure of 5 psig in a vessel that is 8 feet (ft) in diameter. However, TVA utilized walls 0.1875 in thick for 8-ft-diameter vessels because experience shows this thickness results in less tendency to warp, and it facilitates welding. During fabrication, small differences in wall thickness for a water-jacketed combustion chamber of this type do not significantly affect heat transfer rate because the film coefficients are limiting. For example, with a 0.10-in wall, the heat transfer coefficient "U" is about 15 Btu/(hr)(sq ft)(°F). Increasing the wall thickness to 0.1875 in does not decrease this value perceptibly.

Detailed design calculations (heat transfer, etc.) for individual items of equipment are too voluminous to be included in this report. Design calculations can be obtained by writing to R. D. Young, Chief, Process Engineering Branch, National Fertilizer Development Center, Tennessee Valley Authority, Muscle Shoals, Alabama 35660.

Feed Materials

Phosphorus, air, and water comprise the feeds to the acid plant. Phosphorus supply for the stainless steel acid plant should contain at least 98% P_4 and preferably more than 99.5%. The impurity in the feed is called sludge (which is phosphorus contaminated with water that will vaporize), carbonaceous material that will burn, and other inorganic materials that will remain as residue in the combustion chamber (except for fluorine which will vaporize and corrode uncoated and unwetted surfaces of process equipment). Sludge contains 20% to 60% P_4 and the inorganic impurities in it are Si, Ca, P_2O_5, and F along with small amounts of Fe and Al.

Air supply is derived from the atmosphere and should be treated to remove dust. Part of any dust impurity will deposit as a hard crust in a forced-air draft blower from which it must be removed periodically to maintain adequate blower efficiency and to prevent impeller imbalance. Most of the remainder of the dust impurity collects as residue in metaphosphoric acid in the combustion chamber, and the residual flows in the combustion gases and dissolves in product acid. Thus, a good dust filter for air supply to the blowers is a necessity.

Makeup water should have a low impurity concentration to avoid excessive contamination of product acid. It is essential that this water not contain much chloride, which vaporizes as HCl and deposits to corrode unwetted process equipment.

Phosphorus Feed System. Phosphorus is normally stored in tanks of 10,000- to 200,000-gal capacity and periodically transferred to feed tanks at the acid plant. Water (or in some situations, inert gas) must fill space not occupied by phosphorus in storage tanks to avoid phosphorus oxidation by air and resultant formation of corrosive acid. Storage tanks are normally fabricated from mild steel and positioned on concrete piers inside a concrete or metal basin to catch any spillage. Underground sumps built of brick-lined concrete may also be used to store phosphorus. Basins or sumps should have no bottom or side outlets. Heating pipes or jackets and a cover of insulation are provided on each above-grade tank to keep the phosphorus molten at 150° to 160° F (melting point 112° F). Normally, either hot water or steam is utilized as the heating medium in indirect contact with the phosphorus. The addition of steam directly through spargers or in submerged pipe coils to heat phosphorus can involve some hazards; also, steam tends to oxidize and discolor phosphorus.

Phosphorus supply should be of high enough quality that no problems occur from sludge accumulations in storage and feed tanks. If a low grade supply (2% or more of impurities) must be used, provisions should be made for handling, utilization, or disposal of this sludge impurity.

Water used to fill empty space in the storage tanks dissolves some phosphorus [about 3 parts per million (ppm)] and suspends small particles of any impurities. This water, commonly called phossy water, is transferred to a holding vessel where the solids settle and is then recycled. Occasional addition of an alkali, such as ammonia, to hold the pH of the water between 5.5 and 6.5 minimizes corrosion. A pH above 9 must be avoided to prevent PH_3 formation. Any bleedoff of phossy water should be essentially free of suspended particles and must be treated to oxidize any phosphorus. As little as 0.1 ppm of phosphorus in water is toxic to fish.

Either a submerged pump or water displacement is used to move phosphorus from storage tanks through heated pipes to the feed tank at the acid plant. Tanks from which phosphorus moves by water pressure should be smaller than pump-equipped tanks to minimize costs of thick metal needed to withstand pressure. Jackets through which hot water flows are preferred for heating phosphorus uniformly and safely in transfer pipes. The heating water should recirculate through the pipe jackets and a heating tank equipped with an indirect heater such as a steam-heated pipe coil. The heating water should be treated to minimize corrosion.

Recent developments suggest evaluation of electrical-resistance wire heaters for phosphorus pipes. Resistance wire heaters would include Teflon insulation and fiberglass wrapping around resistance wire, a stainless steel braid which can be used as a ground wire, the use of heat-transfer cement between the braid and phosphorus pipe, an angle strip cover over the cement, electrical jumper connections at pipe flanges, and positive automatic temperature control by thermostats.

Figure 5 shows a phosphorus feed system utilizing displacement with water, and figure 6 shows a feed system utilizing pumping. Both systems use two phosphorus feed tanks, a water-holding tank (displacement or overflow), and a water heater. Water overflow or bleedoff from a holding tank goes into the same phossy water system that serves the storage tanks for phosphorus supply.

In the water displacement system (figure 5), a centrifugal pump moves water from the holding tank through a flowmeter (rotameter, orifice, or magnetic), an automatic flow control valve, and into a phosphorus feed tank where it displaces an equal volume of phosphorus to a burner. Preferably, the displacement water should contain no dissolved solids that may precipitate and restrict pipes.

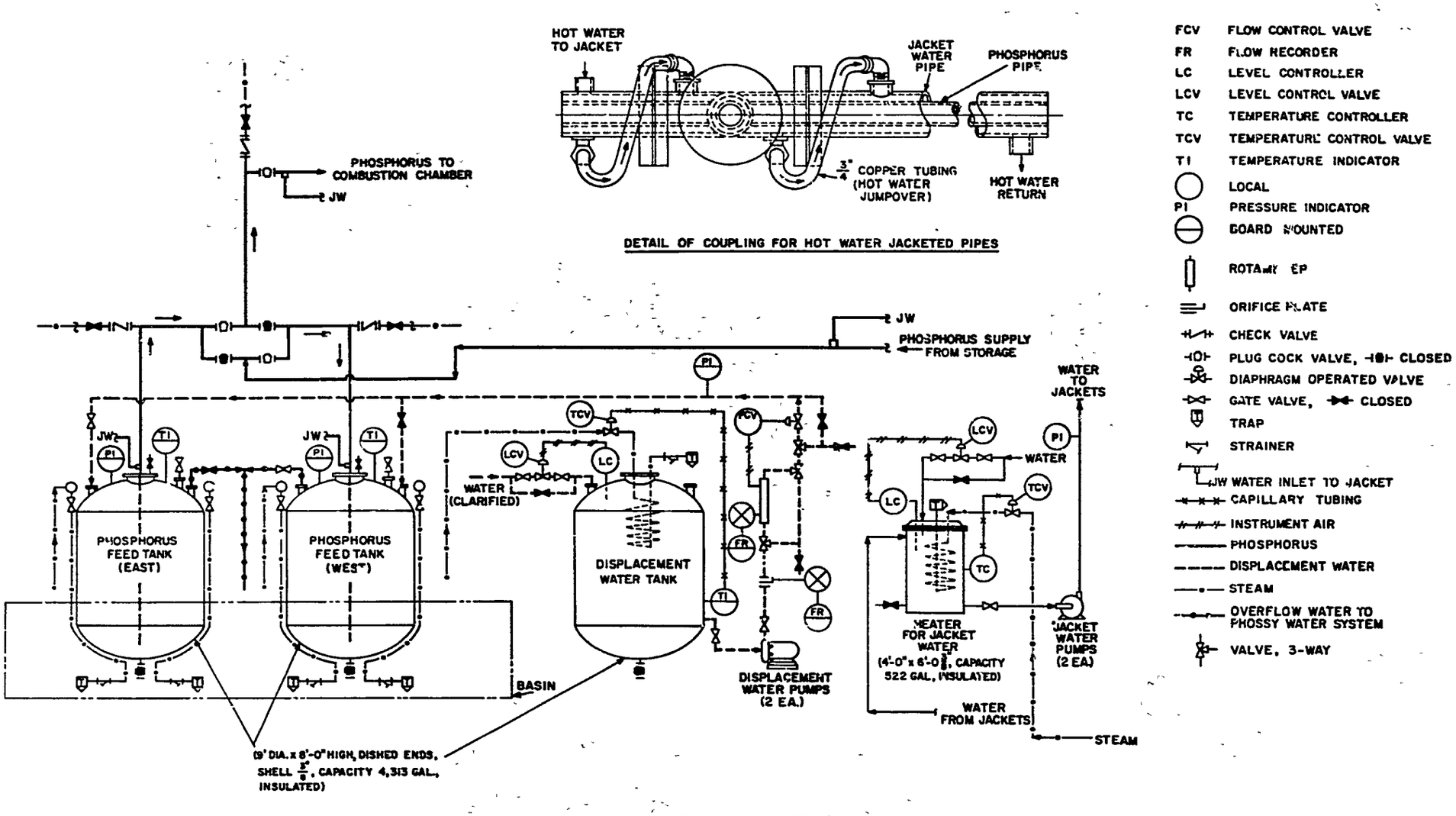

Figure 5. Phosphorus Feed System—Displacement

This system measures water flow and displaces phosphorus at a steady rate to the burner. Thus, the pressures and temperatures in the acid plant should remain constant at a set phosphorus feed rate. The plant operator must keep an accurate record of phosphorus balance in the feeding tank (because a reliable inexpensive phosphorus level indicator is not commercially available), and properly manipulate valves to equalize pressures and start feeding from the idle, filled feed tank before the tank in service runs empty.

In the phosphorus pumping system (figure 6) a centrifugal pump moves phosphorus from a tank through a flow control valve (manually operated from the control room), a rotameter with magnetic float follower that actuates a flow recorder, and thence to the burner. In this system both feed tanks remain at atmospheric pressure and an operator can measure and replenish phosphorus supply at any time. Also, the phosphorus can be supplied to one feed tank where some sludge rises and is retained while the settled phosphorus flows out near the bottom through a pipe to the other feed tank. Phosphorus recycle from the pump should return to the feed tank through a pipe that extends well below the permissible minimum phosphorus level. Otherwise the recycle stream would flow through an accumulated layer of sludge and carry some sludge particles into the feed pump intake.

If the phosphorus feed contains little sludge, the pumping system performs well; but if the phosphorus contains a high proportion of sludge, the displacement system will perform better. Phosphorus has such low electrical conductivity that a magnetic-type flowmeter will not meter it. TVA experience has been better with the displacement metering system.

Air Feed System. Air flows consist of a small stream (about 2% of the total) at high pressure to atomize phosphorus, and a large stream at low pressure to burn the phosphorus.

Atomizing air is compressed and passed through a cyclone separator which removes entrained particles of water and oil. A pressure regulator holds the pressure at 60 psig, and a flow recorder-controller controls the air flow rate to the burner to atomize the phosphorus. Pressure of air flowing in the pipe between the flow control valve and the phosphorus burner varies between about 10 psig and 20 psig depending on the phosphorus feed rate and the width of the gap set between the phosphorus jet and tip of the burner. If the flow of atomizing air stops, an automatic switch stops phosphorus feed to the combustion chamber.

Instead of air, some acid producers prefer to use steam for atomizing the phosphorus. When steam is used, the plant operator must avoid excessive water input which can result in formation of excessive metaphosphoric acid which will decrease heat transfer in the combustion chamber.

Combustion air is taken from the atmosphere in the acid plant area. A blower may force or induce it through the acid plant. Either single or multistage centrifugal blowers are suitable. Blowers should have capacity to force air at 3 to 6 psig or induce exhaust gases entering at about 3 psig negative pressure. The blower suction capacity should be 25% to 50% higher than plant design flow. Flexible joints in duct connections to a blower are needed to prevent transfer of vibrations to process equipment.

In the forced-draft system for feeding combustion air (as used in the TVA plants), the air flows through a cloth or wire mesh filter, and then through an automatic flow control damper to the blower. When air discharges at less than the design flow, the upstream flow control damper imposes a slight negative pressure on air entering the blower. A venturi-type element measures the air rate. A swing-type check valve in the outlet air pipe prevents backflow of phosphorus from the combustion chamber if the blower stops or if a violent reaction increases pressure in the combustion chamber. In the annulus between the air pipe and phosphorus burner, eight sloped baffles swirl the air stream before it discharges through a narrowed annular space into the combustion chamber. A safety (water-filled) gas seal is connected into the combustion air pipe to release air and gas and prevent equipment damage if pressure in the plant should exceed about 6 psig. Excessive pressure develops in the combustion chamber when a sudden decrease in atomizing airflow permits a surge inflow of phosphorus. If the air blower stops running, automatic instruments immediately stop the phosphorus feed and open the damper in the separator stack. Forced-draft movement of combustion air offers these advantages:

1. Air free of dust and corrosive acid and containing only 2% to 3% water vapor enters the blower.
2. Combustion air enters at a steady rate that permits uniform process temperatures and pressures.
3. Any acid or P_2O_5 leakage from a vessel goes out into the cooling water and prevents water inleakage.

In the induced-draft system for feeding combustion air, gas flows through a venturi scrubber-cyclone separator unit before it enters a blower that pumps it through a mist eliminator and an after-scrubber to the atmosphere. Blower parts are Type 316 E.L.C. stainless steel to resist corrosive attack or erosion by any droplets of acid in gas leaving the cyclone. Compared to the air entering the forced-draft blower, the gas entering the induced-draft blower contains about 5% instead of 21% O_2, 10% or more instead of 2% to 3% H_2O vapor, and it has a temperature that is 135° F or higher instead of atmospheric. The induced-draft blower has these advantages:

1. It requires less electricity than the forced-draft blower.
2. It removes heat from dilute acid by increased water vaporization at the lower pressure.
3. It creates a centrifugal force that may aid coalescence

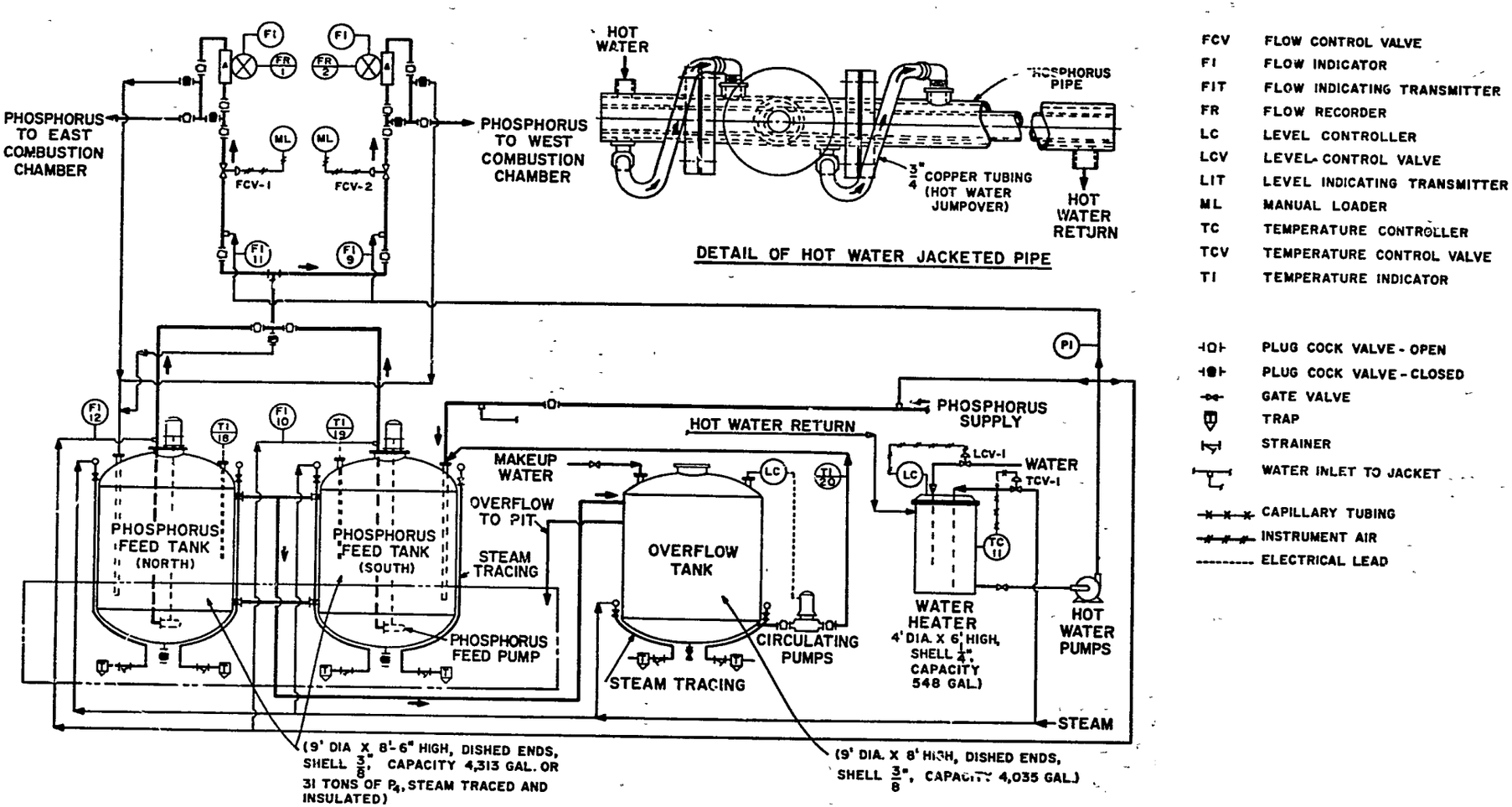

Figure 6. Phosphorus Feed System—Pump

and removal of any residual traces of acid mist in the gas stream leaving the separator.

TVA prefers the forced-draft system.

Process Water Feed System. Most of the water for P_2O_5 hydration in the process and for replacement of water lost as vapor in stack gas comes from an external water source; the remainder enters as vapor in combustion air. A water strainer removes any solids that would restrict flow through valves and sprays, and insulation provides freeze protection of pipes. Water enters through a remotely operated flow control valve, sprays above and below a wire mesh-type mist eliminator in the gas cleanup system, and then flows as dilute acid to a receiver tank. The plant operator adjusts the water input to hold a constant level in the dilute acid tank.

Makeup water fed to the TVA plants is potable service water and typically contains in ppm: 0.3 NH_3^+, 23 Cl^-, 1.8 NO_3^-, 0.26 $PO_4^{\equiv}$, 0.19 F, 3.4 SiO_2, 26 $SO_4^=$, 138 dissolved solids, 51 $CaCO_3$ alkalinity, and 90 $CaCO_3$ hardness. It has a pH of 7.7. Preferably the water should contain little or no chloride. In the TVA plant, some of the chloride evolves as HCl and condenses along with water vapor and traces of acid mist to cause problems with pitting and stress corrosion cracking, particularly in unwetted areas of the separator. Materials of construction that resist attack by HCl, HF, or H_3PO_3 are such alloys as Chlorimet 3 or Hastelloy C, and such synthetic lining materials as polypropylene or Teflon. Industry sells packaged units of ion exchange resins of the base type that remove chloride as well as sulfate from water.

Phosphorus Combustion Chamber

Main design criteria for the vessel to burn phosphorus include: oxidizing phosphorus to produce P_2O_5; cooling the equipment to prevent corrosion or heat damage; removing heat from combustion products; and vaporizing excess metaphosphoric acid deposits so that heat flow through vessel walls to cooling water is not impeded.

The combustion chamber may be vertical with the burner mounted near the bottom, and the P_2O_5-laden gas would flow from the top of the chamber through a duct to an adjacent vessel for hydration (6). Alternatively the burner may be mounted in the top of a vertical chamber with P_2O_5 hydration in the bottom (7). Some designs utilize a horizontal vessel (8). Water in jackets or from sprays is used to cool the vessel walls and remove process heat.

Figure 7 shows a vertical, water-jacketed combustion chamber with a burner mounted in the side. This is for TVA's No. 7 acid unit that is designed to burn 6,000 pounds (lb) of phosphorus per hour. This vessel was sized on the basis of an overall wall heat transfer coefficient of 15 Btu/(hr)(sq ft)(°F). Combustion chambers have been built to burn 6,000 lb/hour of phosphorus and even larger sizes should be practical. Size and operating conditions should be such that the chamber will burn phosphorus at some specified minimum rate without condensing a high proportion of metaphosphoric acid on the shell and bottom of the chamber.

Combustion Chamber. This vertical, cylindrical vessel of all-welded construction has a burner port and an access manway near the dished bottom, and an access manway and a gas outlet duct in the conical top. Water jackets surround all parts, and a notched (1/4-in-thick) edge of a cylindrical water-filled skirt supports the vessel and its parts.

Water jackets may be welded, or they may be built in sections and connected by flanges to facilitate removal and repair. Those in figure 7 are flanged. An annular jacket support bar (1/4 in by 2 in) welded to the shell is sloped slightly so air bubbles can escape. Cooling water flows across the dished bottom, and thence through notches to the bottom jacket. Water flows through four equally spaced pipes at a 45° angle so that it swirls in the bottom of each upper jacket.

Design features that minimize mechanical stresses are: a uniform vessel support on 4-in-long metal edges of the skirt rim; a flexible joint in the off-gas duct; and uniform cooling by water in four jackets.

Atomizing Burner. Figure 8 shows details of the TVA burner in which compressed air discharges through a tapered gap to impinge on and atomize a stream of phosphorus discharging through a center jet. Steam flows in a jacket between the air and phosphorus streams. Auxiliary tubes in the outer jacket discharge water at high velocity to increase turbulence which improves the cooling, and thereby minimizes corrosion of the burner tip. This burner which is made of Type 316 ELC stainless steel has given 15 to 18 months of service before corrosion required replacement of the jet and tip. A jet and tip made of Hastelloy C likely would be more durable.

Burner Assembly. Figure 9 shows the burner assembly offset mounted in the side of the combustion chamber of the TVA No. 7 unit. Uniformly sized swirl baffles would probably be more desirable than those shown. Some pertinent features are given below.

Combustion Chamber		Combustion air	Distance from burner tip to
P_4 capacity	Diameter	annulus, width	dished bottom
6,000 lb/hr	8.0 ft	3.4 in	13.8 ft

The side-mounted phosphorus burner directs the flame downward, and the dished bottom of the vessel deflects the hot combustion gases upward. Thus, the gases and vapors mix well, nearly all the phosphorus oxidizes to P_2O_5, and heat vaporizes excess metaphosphoric acid from the bottom and walls of the vessel.

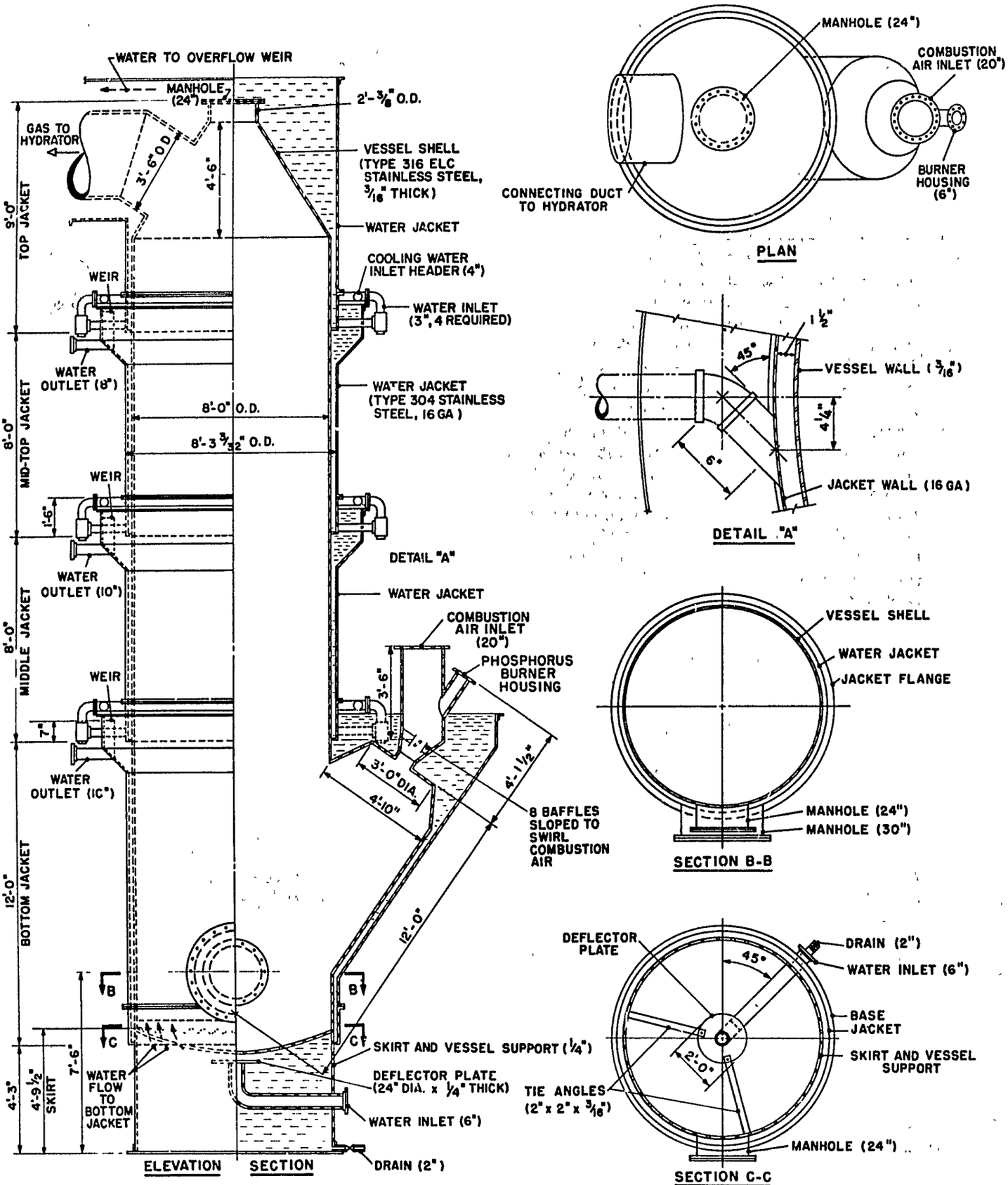

Figure 7. Combustion Chamber

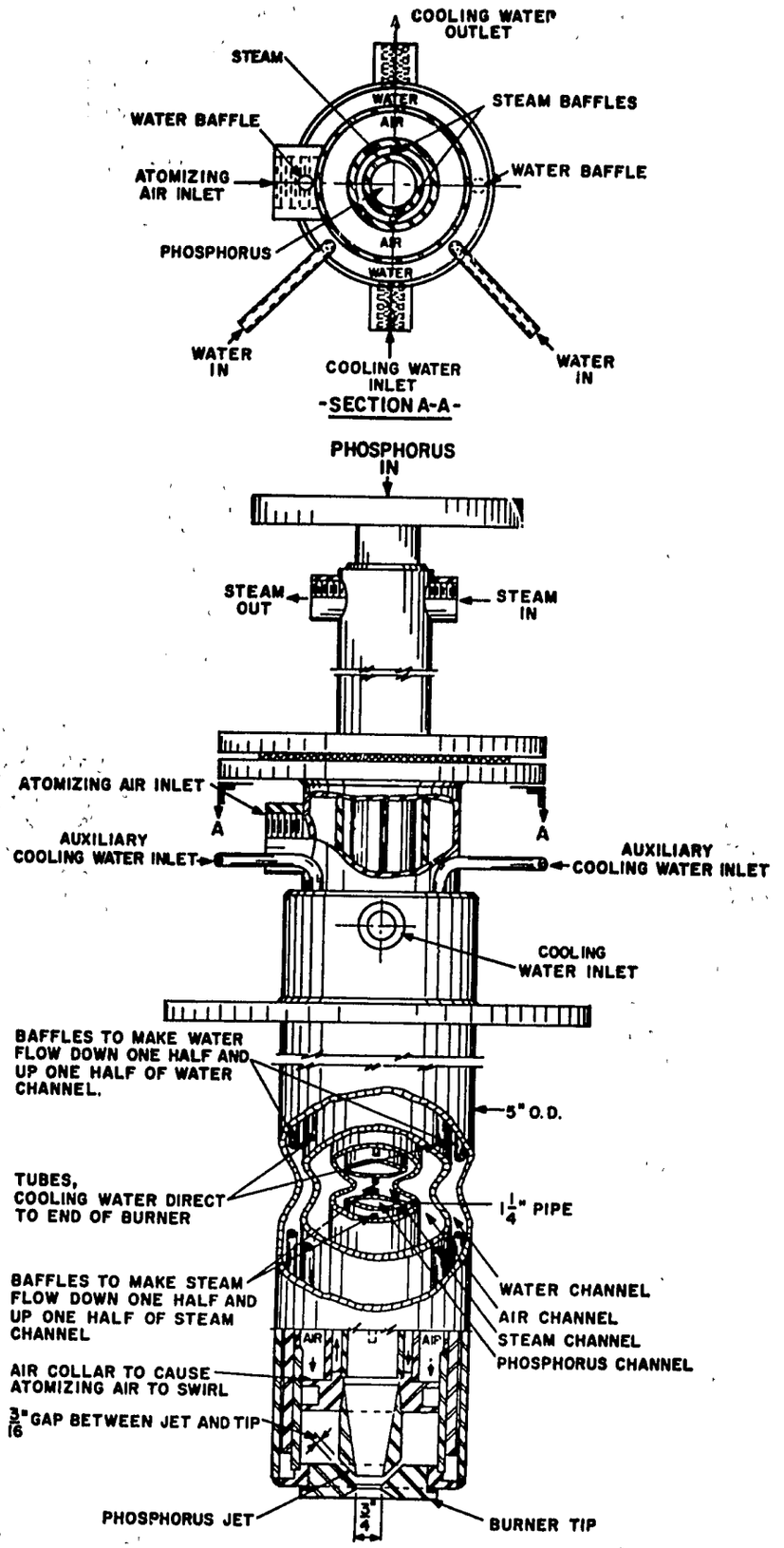

Figure 8. Phosphorus Atomizing Burner—Details of Construction

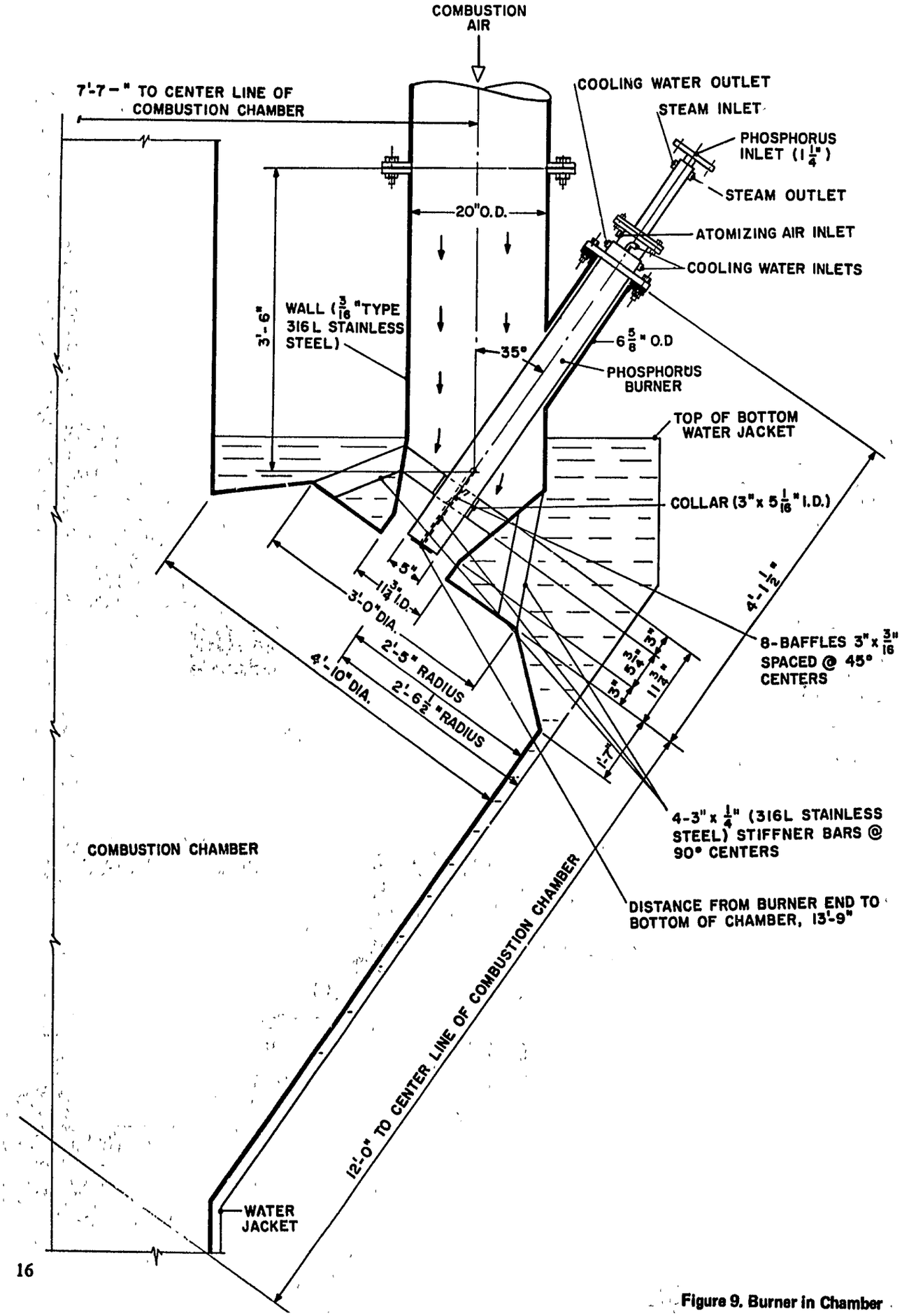

Figure 9. Burner in Chamber

P_2O_5 Hydrator

This vessel must be designed to hydrate P_2O_5 by contacting the phosphorus combustion gases at temperatures between about 1,200° and 1,800° F with water or dilute acid to form strong acid; the equipment must be cooled, without inducing severe mechanical stress, to prevent heat damage and corrosive attack by vapor and liquid of varying acid content.

The hydrator is usually a vertical cylindrical vessel with liquid spray nozzles mounted in the top and in the sides near the top. A vessel with gas entering near the bottom and flowing countercurrent to spray likely would recover more P_2O_5 from the gas than one with gas entering the top; this latter type would be specified when a combustion chamber has a burner in the top. A packed-tower design would improve gas-liquid contact and P_2O_5 recovery but there might be corrosion problems with the vessel or packing. A venturi-type gas-liquid contactor as a hydrator would give efficient mixing and could result in improved recovery of P_2O_5.

Figure 10 shows a vertical, water-jacketed hydrator designed for TVA's No. 7 acid unit. A relatively short water-jacketed duct conducts P_2O_5-laden gas from the top of the combustion chamber to the top of the hydrator. This short duct does not cool the gas excessively and permits operation with gas in the range of 1,200° to 1,800° F. At these temperatures, the duct collects a lining of metaphosphoric acid no thicker than about 1/4 to 1/2 in, which does not excessively restrict heat transfer. The outlet gas duct near the bottom of the tower permits location of the venturi scrubber near grade level.

Tower. This vessel of all-welded construction has the same diameter as the combustion chamber, but a shorter length. The design of the jackets and vessel supports are similar to those used for the combustion chamber.

Heat removal by the hydrator was calculated on the basis of a wall heat transfer coefficient of 4 Btu for the metaphosphoric acid-coated top and 57 Btu/(hr)(sq ft)(°F) for the wetted walls. The product acid cooler was sized to remove excess process heat that could not be removed from the hydrator.

The region of the tower where P_2O_5-laden gas at temperatures from 500° to 1,800° F contacts liquid is probably subjected to the most corrosive conditions in the acid process. However, the metal satisfactorily resists corrosive attack when well cooled.

Gas Ducts and Acid Pipes. The inlet gas duct has an expansion joint and slopes 30° downward to the conical top. This slope minimizes gas impingement on tower walls and allows metaphosphoric acid to slide into the vessel and dissolve in acid, preventing excessive buildup. The outlet duct has an expansion joint and slopes 30° upward to prevent liquid outflow.

Figure 11 is a photograph showing the 4-in full-jet nozzle in the top center of the tower and four fan-type nozzles near the base of the conical top for introducing recycle product acid. Acid from the center spray hydrates and absorbs P_2O_5 and cools the gas stream. Acid from the wall sprays transfers heat from gas through the shell to jacket water and cools the acid that has sprayed through the hot gas stream in the tower.

Acid Cooler

The cooler may be a mechanically agitated tank containing water-cooled coils or plates submerged in the acid. Some acid producers prefer a shell-and-tube-type cooler, especially for cooling less viscous 54% to 62% P_2O_5 acid (75%-85% H_3PO_4). For larger plants more than one cooler may be required.

Figure 12 gives a sectional view of the cooler in the TVA No. 7 plant. This assembly includes a 12-ft by 13-ft tank with a cover, an internal water-cooled acid inlet and gas-seal leg with a gas vent to the hydrator outlet duct, two turbine impellers on a 4-in shaft driven by a 50-horsepower motor, and 36 radially mounted Platecoil (9) sections with an area of 1,680 sq ft. A strong framework of angles, bands, and cross braces supports the Platecoils and water headers. This framework is bolted to lugs in the bottom of the tank. The internal acid inlet uses the large volume of acid in the tank as a gas seal. This is preferred to an external "U"-type seal that would permit gas escape if the small volume of acid in the leg blew out. Dilute acid added to the cooler, to adjust product strength, generates dilution heat. However, the turbulent acid rapidly disperses the heat so that no localized overheating of equipment occurs.

Typical wall-heat-transfer coefficients "U" for the Platecoils are given below for turbulently agitated acid of different strength.

Acid: P_2O_5, %	65	76	80	83
H_3PO_5, %	90	105	111	115
Temperature, °F	200	200	250	250
Coefficient, U = Btu/(hr)(sq ft)(°F)	90	80	60	40

To obtain the coefficients shown above for acids containing more than 76% P_2O_5, it is often desirable to control the average temperature of water in the cooler at about 130° F. The higher water temperature lessens the viscosity of the acid film on the cooling surfaces, reducing film resistance. Because acid is thoroughly mixed, the temperature varies no more than ± 4° F throughout the tank. At the temperatures and concentrations shown above, corrosion of the cooler is not excessive.

Important design features for minimizing mechanical stresses which might cause fatigue failure are:

1. Reinforcing bands around the tank.

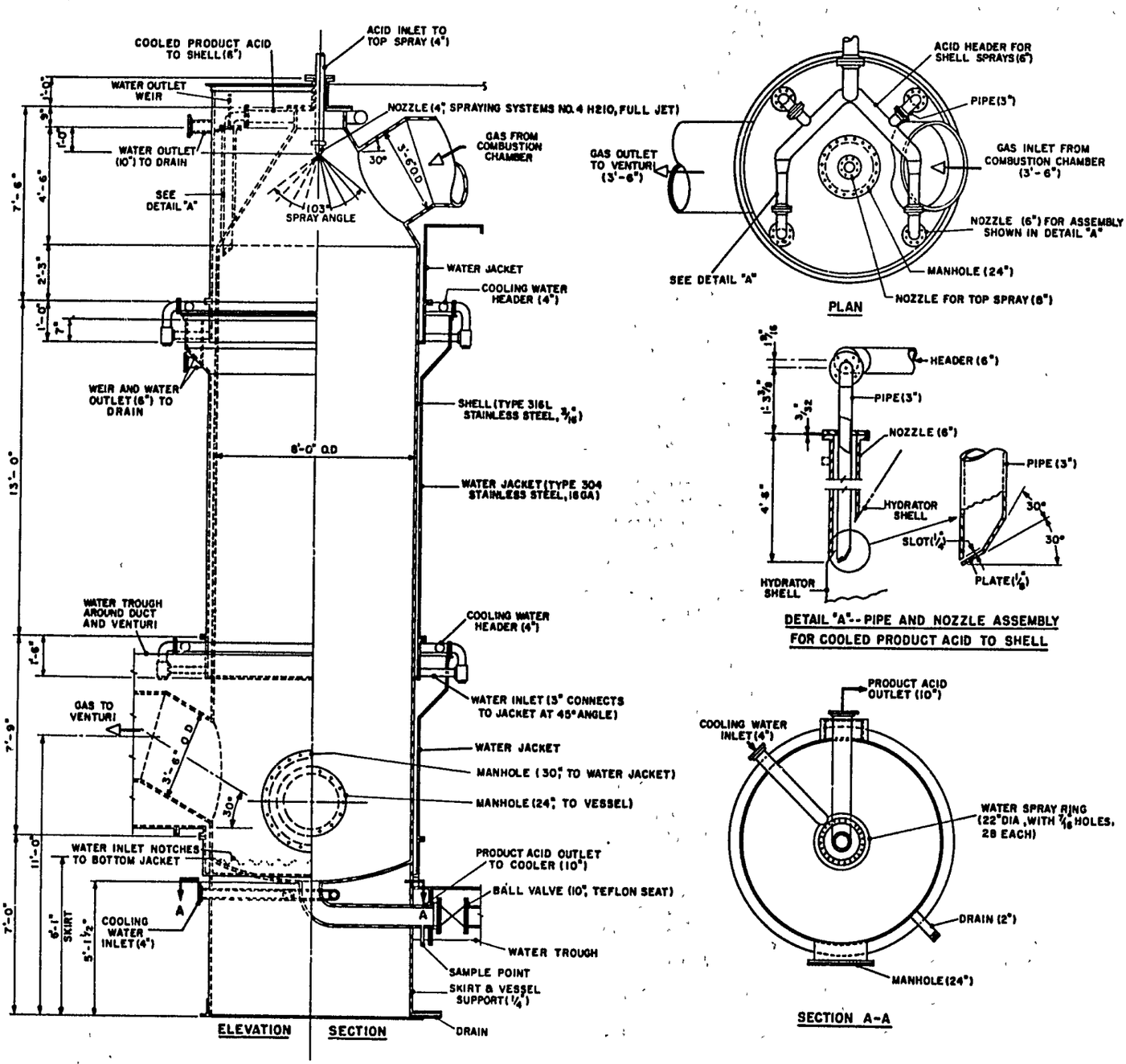

Figure 10. Hydrator

Figure 11. View of Center and Wall Spray Nozzles in Top of Hydrator

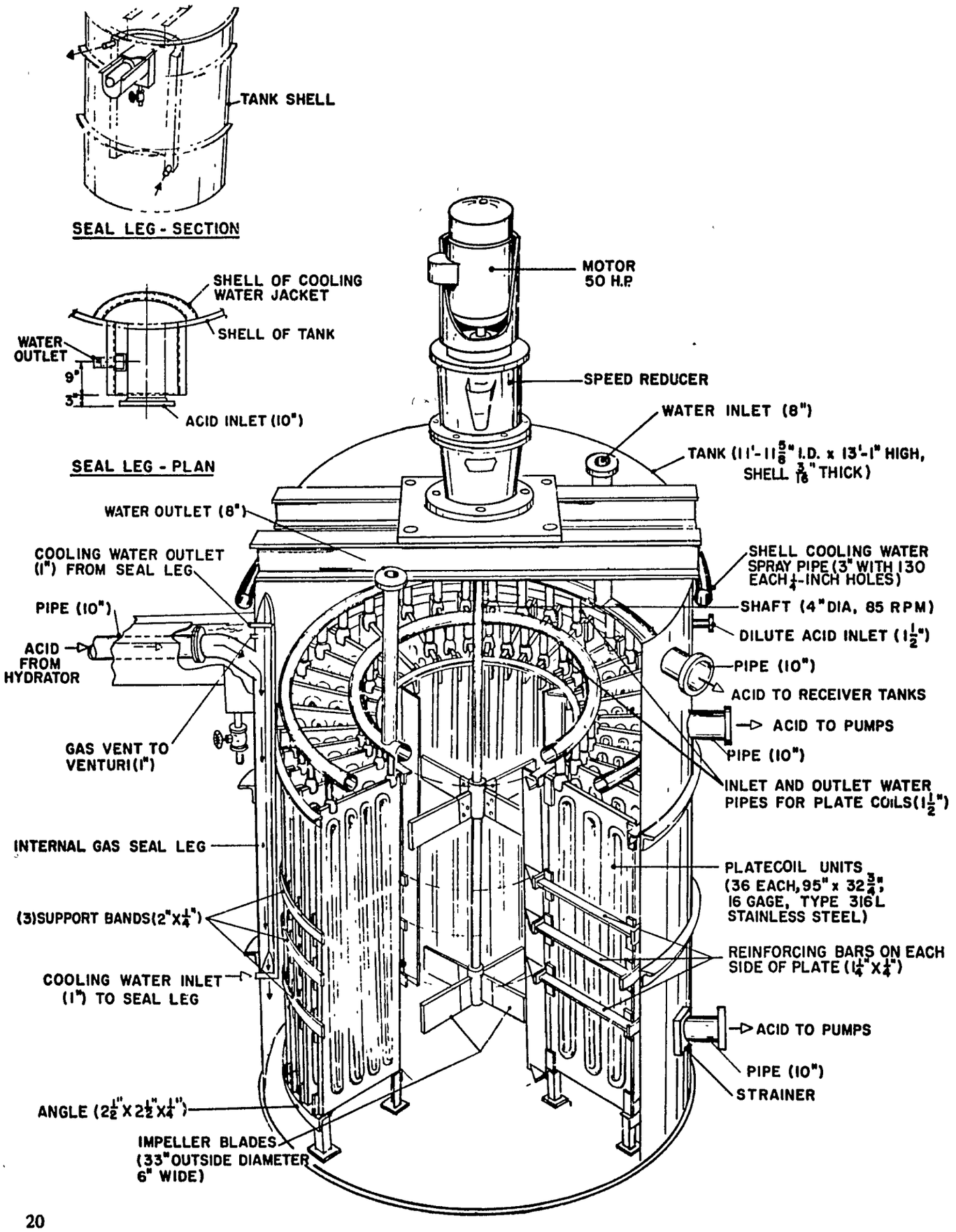

Figure 12. Product Acid Cooler

2. Reinforcing plates welded onto the sides near the edges of Platecoils and then to the annular support angles and bands.
3. Reinforcing bars on each side of the plate sections.

Other features recommended to minimize mechanical stress are:

1. Expansion joints in pipe connections from water headers to permit lengthwise expansion of Platecoils or their support frame.
2. Parallel metal strip pieces (welded to the annular angles and bands of the cross-braced support frame) to hold Platecoil edges but permit their movement during sidewise expansion.
3. And parallel rods (with Teflon sleeves) attached horizontally between annular bands to prevent flexing of Platecoil sections.

Screens mounted over acid outlets retain any solid acid particles that may form in production of acid of high concentration, and the turbulent acid dissolves them. The relatively large volume of acid in the tank facilitates uniform control of product acid strength.

Acid Mist Recovery

Equipment to recover acid mist from the hydrator gas stream should:

1. Force mist particles to come together and form droplets.
2. Separate the large and the small droplets and collect them in acid.
3. Cool the equipment to prevent corrosion and remove process heat.
4. Add water needed to hydrate P_2O_5.
5. Vent the clean gas to the atmosphere.

This system may include a venturi scrubber for coalescing mist, a separator tower with a cyclone for separating acid, mesh-type pads for eliminating residual droplets of acid, and a tank-pump-cooler assembly for holding and recycling dilute acid. Water jackets around the venturi and the cyclone remove process heat. A cooler is recommended for dilute recycle acid, particularly in plants designed to produce acid containing 79% or more P_2O_5. If a shell-and-tube-type cooler is used, acid would flow through the shell side, and the shell would be water jacketed.

Venturi Scrubber. Figure 13 is the water-jacketed venturi scrubber in the TVA No. 7 acid unit. The duct slopes slightly upward to prevent outflow of acid from the hydrator and then slopes downward so that dilute acid drains from the venturi to the separator. The venturi unit includes a dilute acid spray nozzle to dissolve any solid metaphosphoric acid from walls of the upstream duct, a section with a converging angle to the throat, headers with spray nozzles for jetting dilute acid into high-velocity gas in the throat, and a damper for adjusting throat area and pressure drop. Because equipment in an adjoining plant limited length of the duct, the downstream run from the venturi was built rectangular instead of divergent toward the separator. This deviation from standard venturi design practice, however, did not adversely affect venturi performance.

Design bases for the upstream duct that cools gas from 500° to 425° F were: a gas velocity of 25 ft/second and a wall heat transfer coefficient of 41 Btu/(hr)(sq ft)(°F). Design bases for the venturi throat were 2 lb/sq in pressure differential, and 15 to 25 gallons per minute (gpm) dilute acid recycle per 1,000 cu ft gas. A wall heat transfer coefficient of 35 was used for the water-jacketed venturi and cyclone.

This type of venturi effectively coalesces acid mist when the pressure drop across it is between 35- and 60-in water gage. The operator adjusts the damper to hold pressure in that range when acid strength or production rate is changed. Spray nozzles erode and are replaced once a year.

Separator. The cylindrical separator tower, of all welded construction shown in figure 14, has a cyclone gas-liquid separator and a conical acid collector in the water-jacketed bottom half. The top half has two mist eliminator pads with access manways, a stack gas sampling tube, and an outlet duct with a remotely operated butterfly-type valve. A notched edge of the skirt uniformly supports the vessel. Although acid and gas are below 200° F and normally present no corrosion problems, a perforated pipe ring to distribute cooling water around the acid pipe connection to the cone is desirable.

Design bases for the cyclone section of the separator tower were: 50 to 60 ft/second gas velocity at the inlet and 8 to 10 ft/second velocity in the body. Cross-sectional areas of gas flow channels expressed as percentage of that of the separater body were: inlet duct, 15; cyclone annulus at a 90° angle to inlet gas flow, 17; and internal duct, 45. A wall heat transfer coefficient of 35 Btu/(hr)(sq ft)(°F) was used for the water-jacketed area. One horizontal and two 90° vertical plates attached near the apex of the inverted cone prevent a vortex through which gas could escape and blow the seal to the dilute acid receiver.

The mist eliminator section of the tower has the same diameter as the cyclone section. It is equipped with wire mesh-type pads 6 in thick made of Type 316L stainless steel. The lower pad is Demister Style-655. It is located at a point three-fourths of the tower diameter below the top pad, which is Demister Style-700 HT (10). Makeup water at about 11 gpm flows through Spraying Systems No. 1 HH12 nozzles to wet the top and bottom of the lower pad. Heat flows through the shell at 160° F to air at 80° F with a transfer of 200 Btu/(hr)(sq ft). A remotely operated damper in the 2-ft off-gas duct maintains 0.5 to 1.0 psig in the separator tower. The damper permits gas flow to

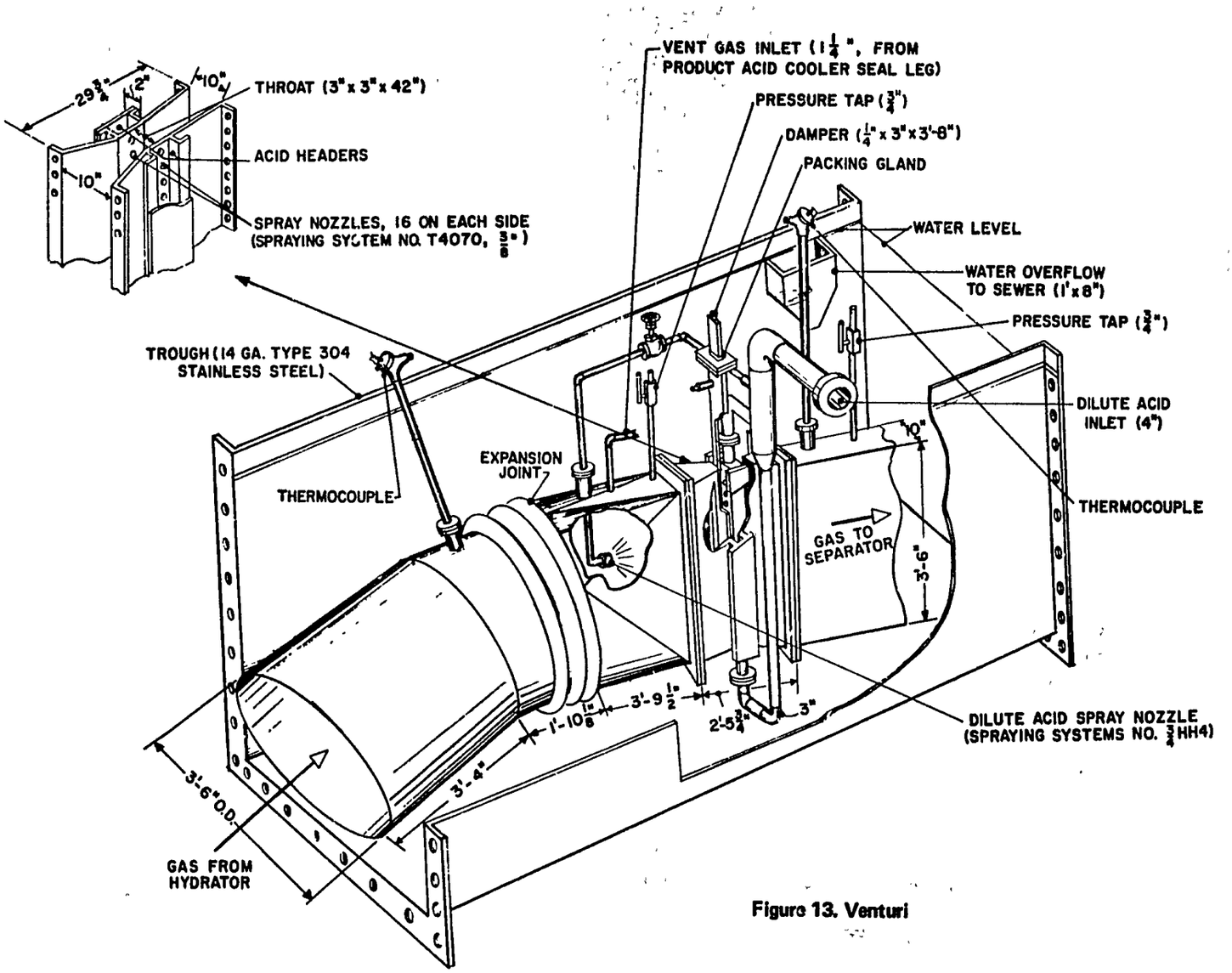

Figure 13. Venturi

analyzers for excess oxygen and condensate conductivity, and can be set to hold 4 to 6 psig during plant inspections for gas leakage.

Material of construction other than Type 316L stainless steel is recommended for mist pads to resist chloride and fluoride attack. Pads of plastic such as Teflon (300° F maximum for fibers) are satisfactory, provided that operators avoid momentary operation with less than theoretical air for phosphorus combustion. (Any unoxidized phosphorus in process gas could collect and later burn, resulting in a high temperature that would destroy the plastic.) Facilities for a water-wash of the tower top, off-gas duct, and mesh pads are recommended to periodically remove any corrosive condensate of chloride or fluoride. Pressure taps are required to measure pressure differential, which usually should not exceed about 1-in water gage, across the mesh pads.

The dilute acid system has a covered, 1,200-gal receiver tank (figure 15) supported on piers, two 250-gpm pumps (one is a spare), and a cooler. Acid flows from the separator tower into the top of the receiver tank through an 8-in pipe. A strainer is installed around the 6-in outlet from the tank to the pump to remove any solids that might cause pump damage or spray nozzle stoppage. A 4-in pipe, near the top of the tank, drains any excessive acid to a sump for recovery.

The pumps may discharge dilute acid through a cooler to venturi sprays and to the product acid cooler. The cooler can be bypassed when the unit is operating at low production rates.

This separator tower in combination with the venturi scrubber, previously described, performs satisfactorily and the outlet gas usually contains less than 0.1% of the P_2O_5 equivalent of the phosphorus feed to the plant. This high recovery efficiency is a major advantage for this type of acid plant.

Piping and Pumps

Piping. Acid piping is Type 316L stainless steel joined by flanges or welds instead of threaded connections which corrode because of cold-work stresses. Ball valves with Teflon seals and sleeves give satisfactory service. Water jackets cool and minimize corrosion of pipes for acid containing: 76% or less P_2O_5 above 200° F; 76% to 80% P_2O_5 above 250° F; and 80% or more P_2O_5 above 265° F. Pipes from the cooler and receiver are insulated so acid streams do not cool and become excessively viscous. Also these outlet pipes are traced for heating with low-pressure steam to prevent acid solidification during temporary plant shutdown. It is very important that no acid (and steam) leakage occur under insulation, since this can cause corrosion of the metal and deformation of the insulation.

Type 304 stainless steel piping with flanged or threaded connections is used for cooling water at pH of 5.5 to 6.0. Subsurface piping for effluent cooling water at 120° F or less is glazed ceramic tile with plastic-sealed joints. The effluent water collecting and discharging pit is lined with acidproof brick.

Piping for phosphorus, for phosphorus jacket water, makeup water, and air are mild steel. Steam pipes are mild

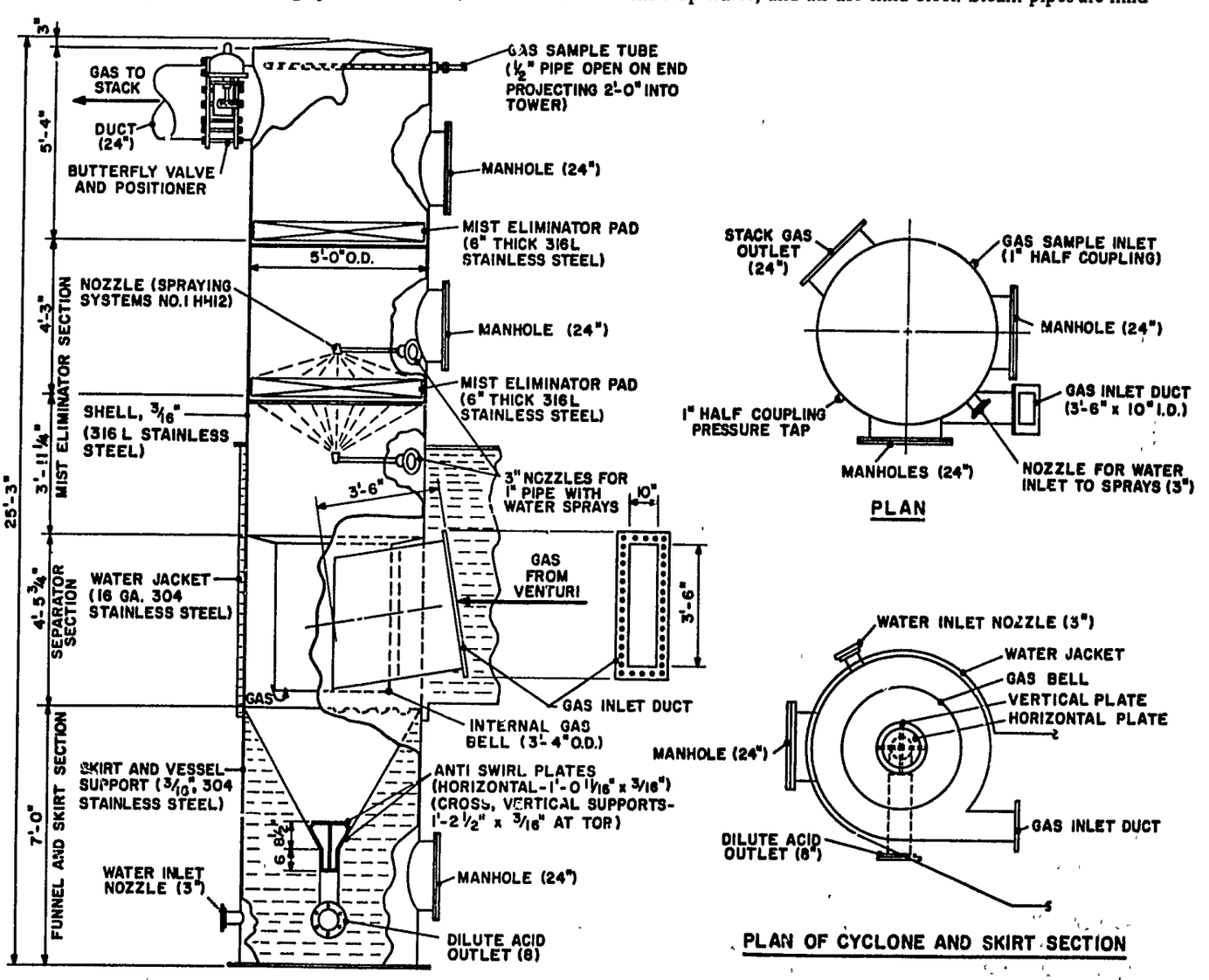

Figure 14. Separator

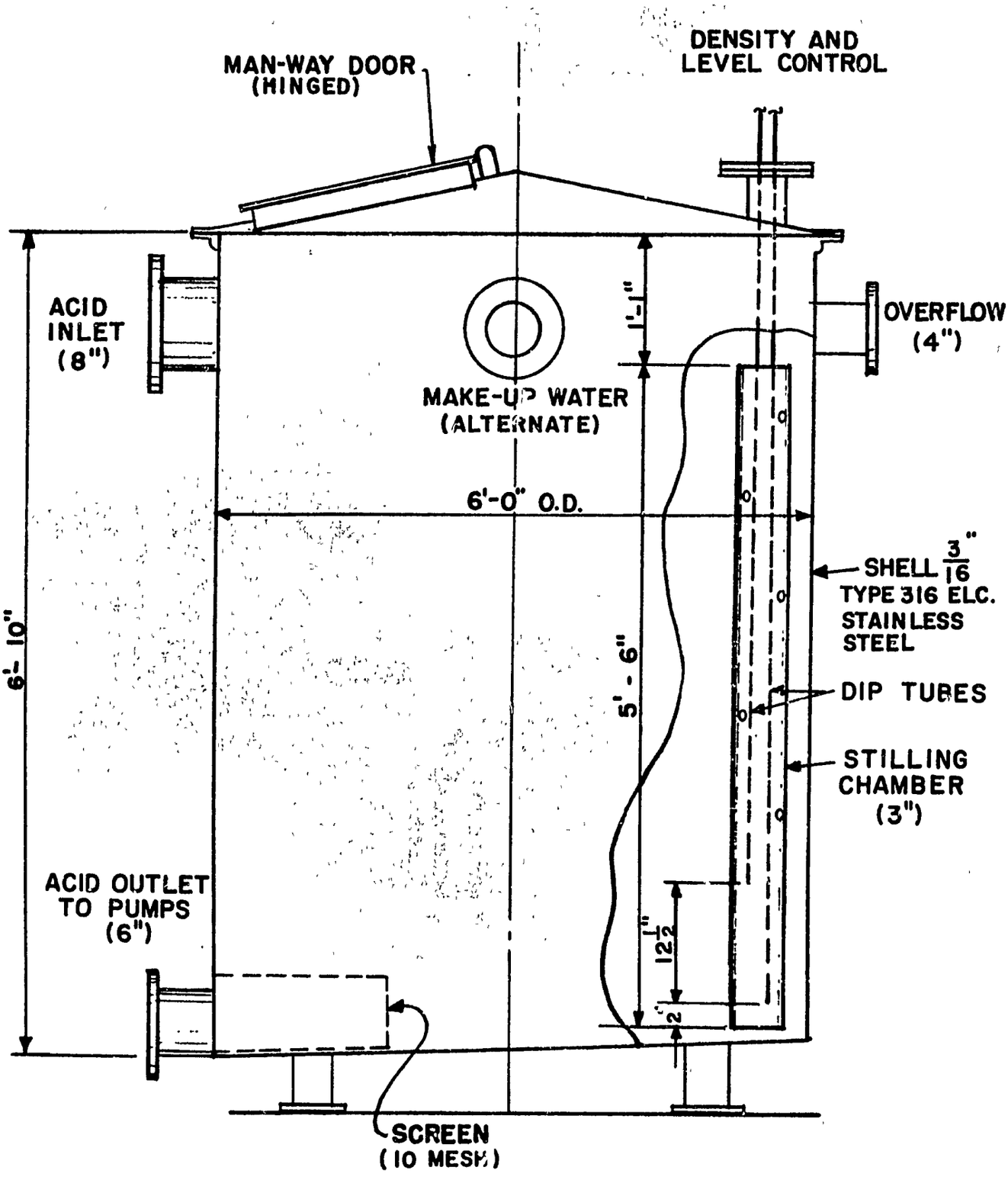

Figure 15. Dilute Acid Receiver

steel except for the tracer tubing which is copper. Pipe for 66° Baume (Be) sulfuric acid is mild steel except that the flow control valve and downstream pipe including check valves to the cooling water supply main are stainless steel. A perforated pipe made of Teflon is recommended for sparging the small flow of sulfuric acid into the inlet stream of cooling water to adjust the pH.

Pumps. Pump motors operate on 440 volts and turn at 1,750 revolutions per minute (rpm). The pumps are the centrifugal type described below for different service.

Pumps for	Pumps, No. of: In service	Pumps, No. of: As spare	Capacity: gpm	Capacity: Head, ft	Motor used, horsepower
Acid, strong to hydrator	2	1	250+	120	45
Acid, dilute to venturi	1	1	250	130	40
Acid, product to storage	1	1	100	70	7–1/2
Water, to displace P_4 feed	1	1	10	100	2
Water, hot to jackets	1	1	60	85	5

The horizontal centrifugal pumps (11) for acid are made of Types 316 and 316L (welded parts) stainless steel. The impeller has back pumpout vanes that keep negative pressure on the shaft entry area and prevent leakage during operation. It has no stuffing box or mechanical seal, and thus, no sealing surfaces in contact with each other. At the instant of pump shutdown, the shaft and impeller move axially to seal against the casing to prevent leakage. A spacer coupling permits disconnection and removal of the pump without disturbing the motor setting.

The pump for moving product acid to storage is of the vertical submerged type, and the others are horizontal. The upper bearing on the vertical pump is metal and lubricated, but the intermediate and lower bearings are Teflon and require no lubrication.

Water pumps have mechanical seals; corrosion-resistant alloy construction of casings and impellers is recommended.

Sulfuric acid to control pH of inlet cooling water is moved from a mild steel pressure tank by displacement with dry air as shown in figure 16. A small continuous flow of air is maintained through the purge rotameter to keep the hydrogen concentration below 0.5%. The concentrated sulfuric acid slightly attacks the steel tank to yield some hydrogen. (Lower explosive limit of H_2 is 4.1% in air.)

Cooling Water

A dependable supply of cooling water must be provided to control process temperatures. Normally, the cooling medium removes about 93% of process heat input; stack gas and product acid remove the remaining 7%. About 73,000 gal of water entering at 85° F. and leaving at 120° F. is required to remove the heat generated (21.3 million Btu) when 1 ton of phosphorus is burned to make acid. Recovery of heat for steam production by a heat transfer medium at the combustion chamber has been reported (12), but no details on the apparatus and procedure are available.

Where a large supply of suitable cooling water is not available for once-through use, water could be recycled after being cooled directly in a tower, or indirectly by air or water. Water must be monitored and treated so that it does not corrode equipment or deposit scale on heat transfer surfaces in the acid plant. Any acid inleakage to the recycle water must be immediately detected and corrected.

Source. Water supply for the TVA No. 7 plant comes direct from the Tennessee River. At the pumping station, the water passes through a rotating screen, and it is periodically treated with chlorine injections to prevent growth of algae, slime, or clams in piping and heat exchangers. At the acid plant, the water goes through a venturi-type flowmeter, a strainer (to remove small fish and weeds) and is mixed with sulfuric acid for pH control. It then flows through process heat exchangers, and discharges to a stream flowing back to the river.

Composition. A typical analysis of this water in ppm is as follows: 0.2 NH_3, 19 Cl^-, 1.7 NO_3^-, 0.2 $PO_4^{=}$, 0.2 F^-, 124 dissolved solids, 1.3 suspended solids, 3.5 SiO_2, 22 $SO_4^{=}$, 54 alkalinity as $CaCO_3$, and 80 hardness as $CaCO_3$; the pH is 7.5. Solids precipitate from this water according to the Langelier saturation index (13). Laboratory tests and experience at the TVA No. 6 plant showed that adjusting the pH of influent water to between 5.5 and 6.0 by sulfuric acid addition and controlling effluent water at 120° F or less was required to prevent solids deposition and scale formation on heat transfer surfaces. Because this water at 120° F at a pH between 5.5 and 6.0 corrodes mild steel at rates up to 100 mils/year, water jackets and piping were built of acid-resistant materials previously described.

Flow Control. An element in a jacket outlet pipe automatically actuates a valve in a jacket inlet pipe to maintain effluent water at 120° F.

The cooling-water supply system described previously operates satisfactorily. A thin film of iron oxide (Fe_2O_3) that deposits slowly on heat transfer surfaces can be removed by washing them with an oxalic acid solution (10%-20%) heated to 140° to 160° F.

Process Instrumentation

The phosphoric acid plant should be instrumented to permit close process control. Optimum process control protects equipment from corrosion, avoids unsafe operating

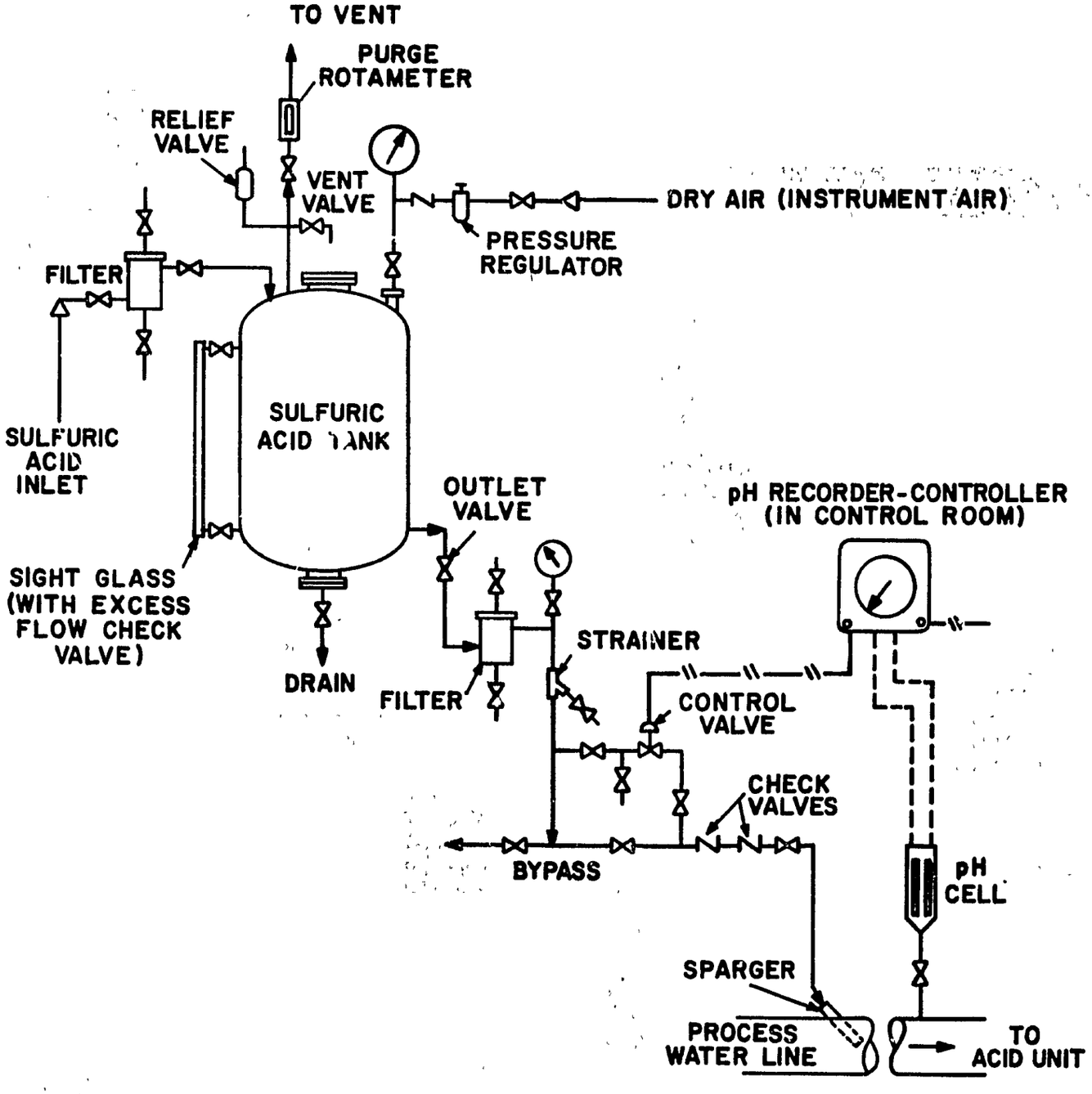

Figure 16. System for Feeding Sulfuric Acid to Process Cooling Water

conditions, assures high P_2O_5 recovery, prevents air or stream pollution, and assists in consistent production of acid of desired concentration.

Figure 17 shows instrumentation in the TVA No. 7 acid unit. A description of the main instrument applications follows. Figure 18 is a photograph of the instrument panel in the operators' control room.

Flow. Instruments indicate and integrate flows of compressed air, steam, and product acid (to storage). Recorders show the flows of strong acid to the hydrator and control preset flows of combustion air, atomizing air, phosphorus (by displacement water flow), dilute acid to the product acid cooler, and makeup water to the separator. Magnetic meters measure flows of acids that vary in density, strength, and viscosity. Orifice plates in cooling-water pipes permit periodic flow measurements for heat balance calculations.

Pressure. Gages indicate pressures of air, steam, water supplies (cooling, displacement, and makeup), phosphorus, gas at mist eliminators, and of acid leaving pumps. A recorder shows pressure differential across the venturi scrubber throat and a recorder-controller maintains preset gas pressure in the separator.

Temperature. Multipoint selectors indicate temperatures of air, water supplies, and effluent cooling water for acid piping between hydrator and cooler. Controller-alarm units indicate temperature of effluent water and control flow of inlet cooling water at each vessel jacket, each duct trough, and the product acid cooler. Multipoint instruments record temperatures of phosphorus feed; gas leaving the combustion chamber, hydrator, venturi, and separator; and acid leaving the hydrator, product acid cooler, and dilute acid receiver. Thermocouple wells of Hastelloy C last about a year in the combustion chamber-hydrator duct, in the duct leaving the hydrator, and in the acid leaving the hydrator. Other wells exposed to less severe conditions are of Type 316L stainless steel and are durable.

Level. Dip tubes (air bubblers) actuate a recorder that shows acid levels in the dilute and the product acid receivers.

Analysis. The pH of acid-treated cooling water actuates a recorder that controls sulfuric acid feed to maintain the pH between 5.5 and 6.0. Dip tubes (air bubblers) actuate recorders that show densities of acids in the product acid cooler and receiver, and in the dilute acid receiver.

An electrolytic conductivity cell actuates a multipoint conductivity recorder that is calibrated to show ppm P_2O_5 in cooling water leaving each vessel jacket, each duct trough, the dilute and the product acid coolers, and the combined effluent water streams. When the P_2O_5 exceeds a preset value, an alarm warns the operator to locate a gas or an acid leak. This analyzer also records P_2O_5 in condensate from gas leaving the separator. Conductivity of the combined streams of effluent water changes only about 5 to 10 micromhos with an acid inleakage of 200 lb/day. To detect such a small change, an instrument that measures the ratio of the conductivities of the outlet water and treated inlet water is recommended (14).

A paramagnetic analyzer records the oxygen (excess combustion air) in gas leaving the separator. This analyzer permits the operator to maintain an adequate percentage of excess air, particularly when phosphorus or airflows fluctuate, to prevent production of red acid (containing lower oxides of phosphorus), and to prevent destruction of mist eliminator pads (by collection and later combustion of phosphorus).

Safety Interlocks. Safety switches are interlocked to stop the phosphorus feed and open the damper in the separator stack should the combustion air or the atomizing airflow stop.

Switches. "Start" and "stop" push-button switches in the operators' control room (and in the plant) connect to the motors for pumps, the combustion air blower, and the agitator in the product acid cooler. Ammeters show the power load on the air blower and the agitator.

Safety

Because of the danger in handling and storing phosphorus and phosphoric acid, it is essential that the plant be designed for safest possible operation and that operating personnel be well trained in correct and safe techniques. Chemical safety data sheets (15) are useful training aids in proper handling of dangerous chemicals. Rules pertaining to safety equipment and safe handling practices should be rigidly enforced, workers must be taught to think "SAFETY" at all times.

Phosphorus is a flammable and poisonous material that must be stored and handled with extreme care. It burns spontaneously when exposed to air. As little as 15 milligrams of phosphorus taken internally can be fatal. Breathing phosphorus vapors over a long period of time can cause weakness, anemia, and infected teeth, gums, and jawbone. Because of its toxicity, care must be taken to prevent water pollution by phosphorus. Maintenance workers must make sure that equipment has been properly decontaminated before initiating any repair work.

Information regarding safety features that should be incorporated into process controls is given at appropriate locations in the text. One important safety control feature mentioned previously cuts off the flow of phosphorus automatically if the supply of combustion air is interrupted. This prevents building of an excess of phosphorus in the system that could release excessive energy when air flow is resumed.

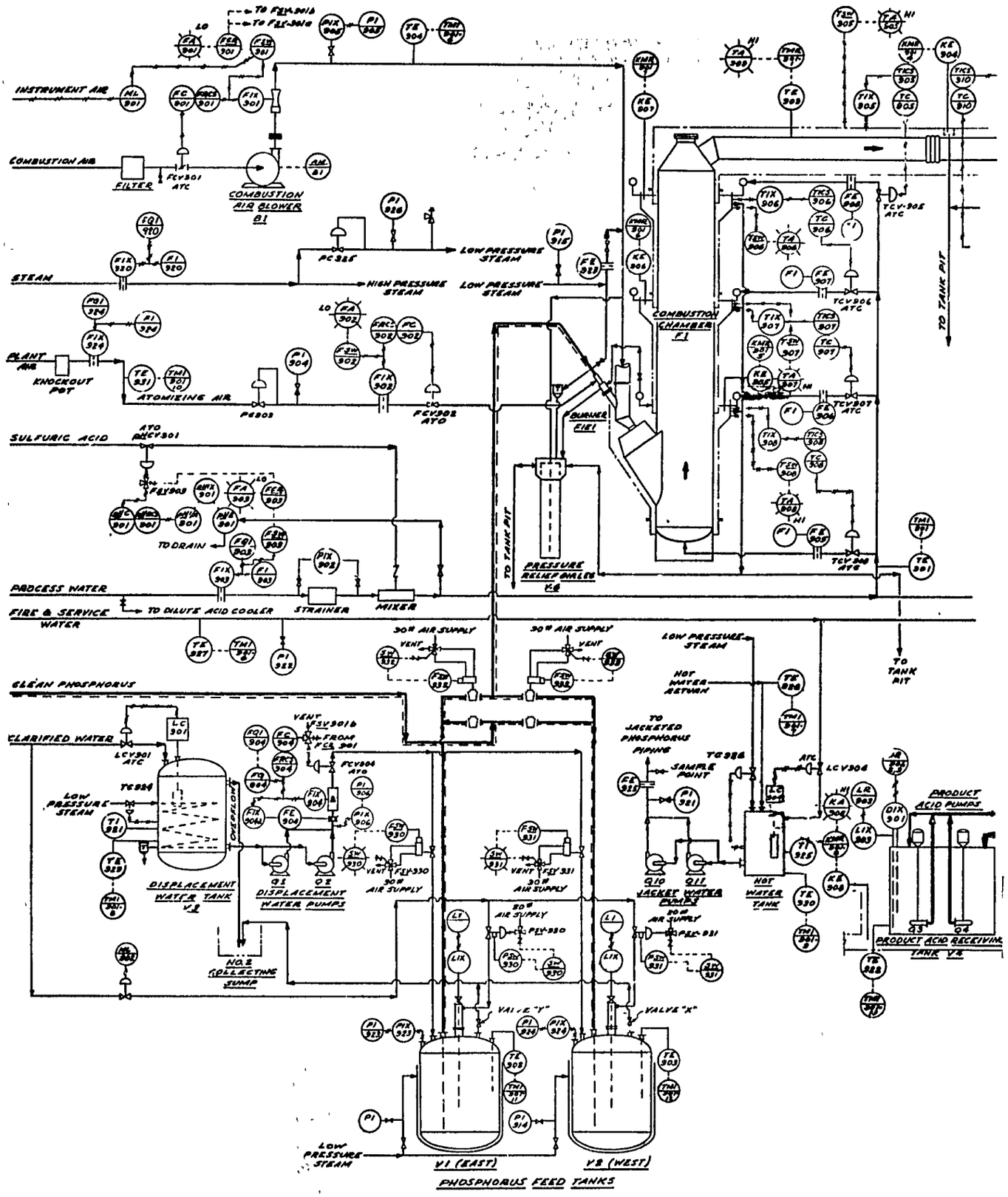

Figure 17. Process Flow Diagram with Instrumentation

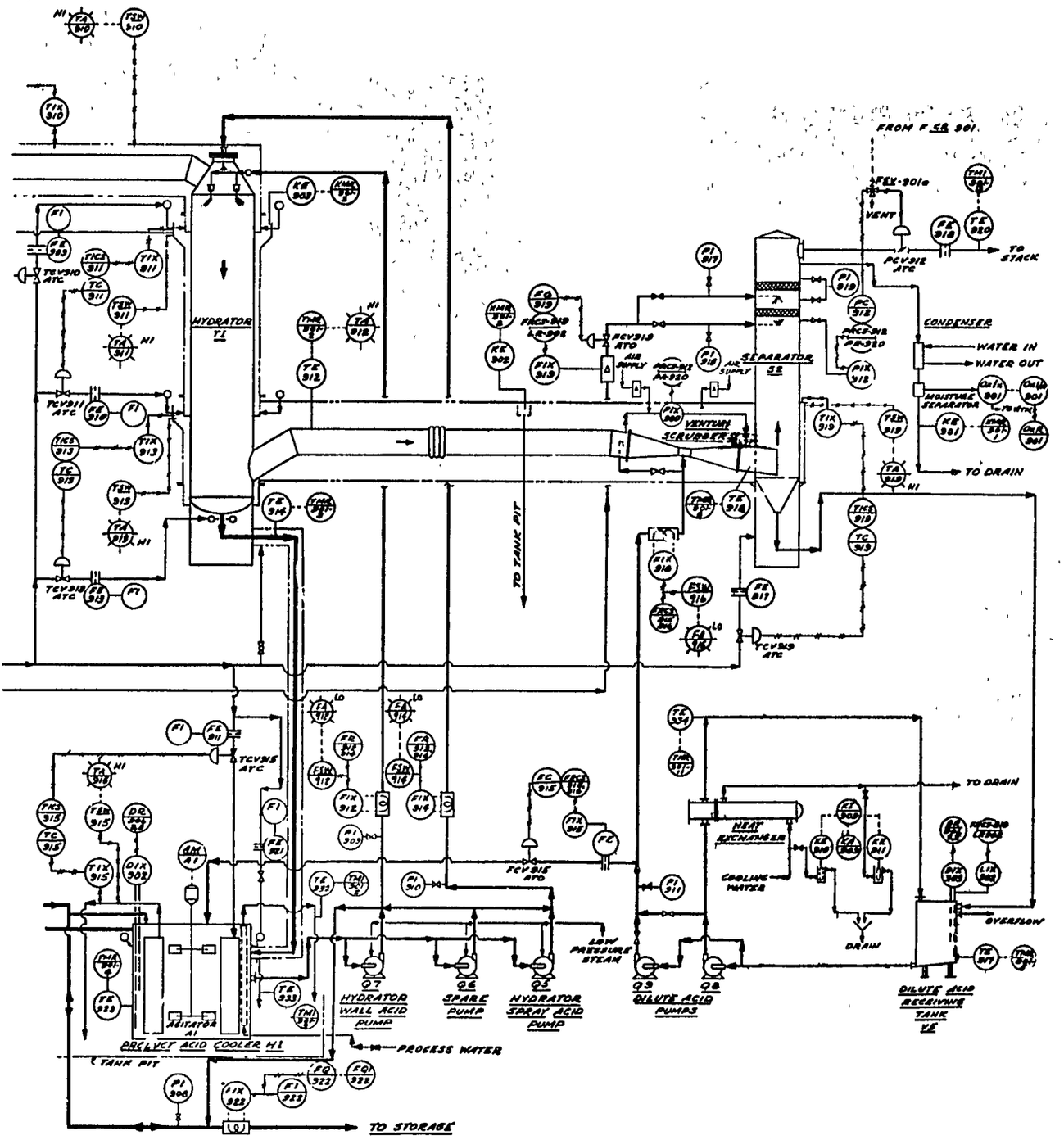

LEGEND

- PROCESS FLOW
- ELECTRICAL CONNECTIONS
- PNEUMATIC CONNECTIONS
- CAPILLARY TUBING
- MECHANICAL CONNECTIONS
- JACKETED PIPE

- MAGNETIC FLOW METER
- ROTAMETER
- SPRING & DIAPHRAGM CONTROL VALVE
- PISTON OPERATED CONTROL VALVE
- MANUAL VALVE
- SOLENOID VALVE
- SAFETY RELIEF
- PLUG VALVE
- STEAM TRAP

- BOARD MOUNTED INSTRUMENT
- TWO BOARD MOUNTED INSTRUMENTS (which plug together to make one instrument)
- FIELD MOUNTED INSTRUMENT
- ORIFICE PLATE
- ALARM LIGHT

T	TEMPERATURE
P	PRESSURE
F	FLOW
L	LEVEL
M	MULTI-POINT
V	VALVE
S	STATION
I	INDICATOR
R	RECORDER
C	CONTROLLER
A	ALARM
Q	INTEGRATOR FOR FLOW
E	ELEMENT
AM	AMMETER
X	TRANSMITTER
SV	SOLENOID VALVE
SW	SWITCH
D	DENSITY
pH	POTENTIAL OF HYDROGEN IONS IN SOLUTION
K	CONDUCTIVITY
O_2	OXYGEN
CR	CONTROL RELAY
I/A	CURRENT TO AIR
ML	MANUAL LOADER

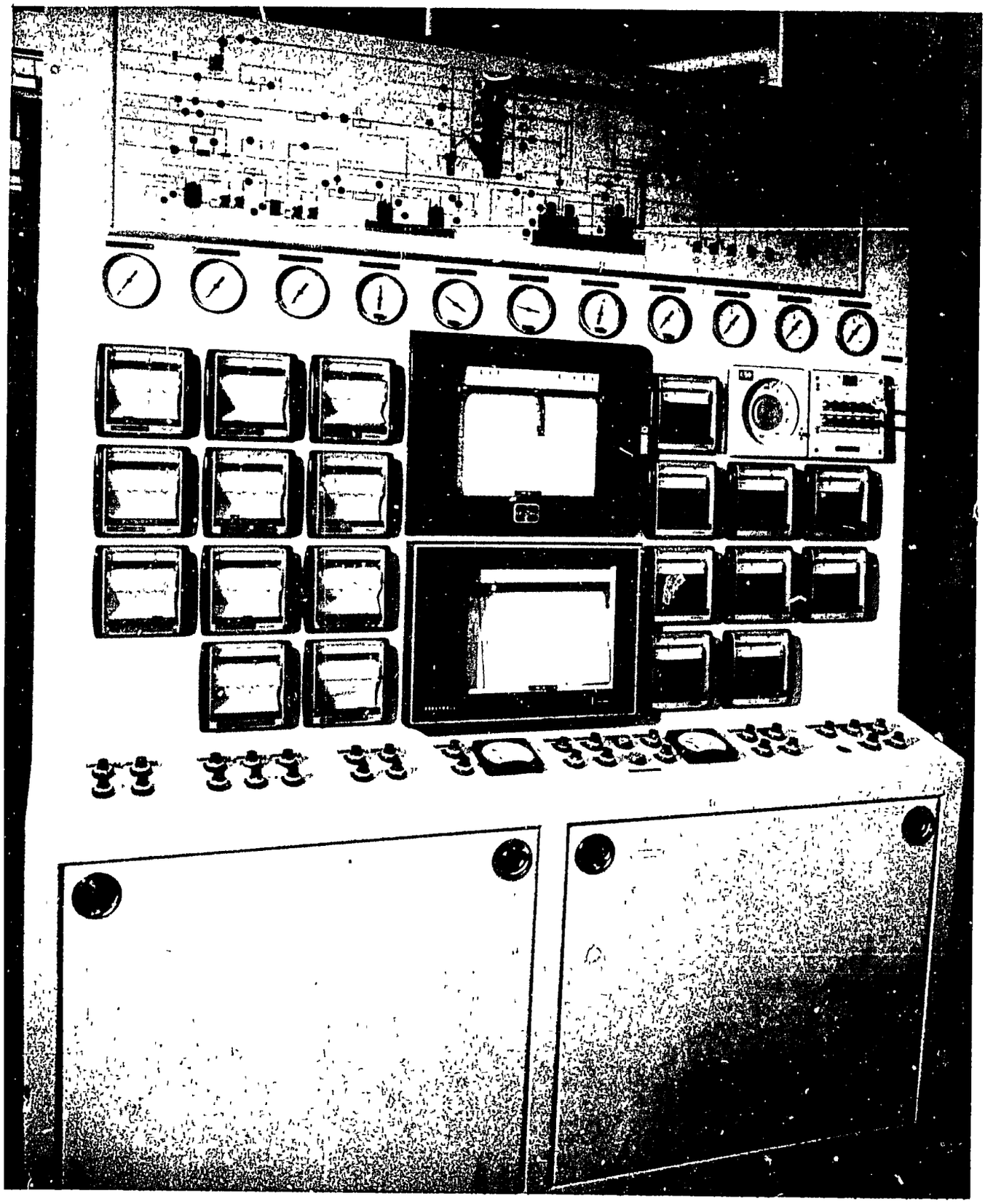

Figure 18. Control Console for TVA's No. 7 Phosphoric Acid Unit

OPERATING PROCEDURES

Procedures for plant startup, shutdown, and maintenance follow:

Preparation

1. Check out instruments and process equipment.
2. Inspect piping and vessels for leaks.
3. Add phosphorus to feed tanks and turn on steam to heating coils.
4. Fill the product acid cooler and the dilute acid receiver tanks, preferably with acids of proper strength. If acids are not available, fill the tanks with water.
5. Heat acid (or water) in cooler to 150° F with steam sparger.

Startup

Materials are started and adjusted to prescribed rates in the following sequence:

1. Cooling water to jackets around combustion chamber, hydrator, and scrubber.
2. Atomizing air.
3. Combustion air.
4. Jacket water and heating steam to phosphorus burner.
5. Stack gas to oxygen analyzer.
6. Acid (or water) from cooler to top spray and to shell of hydrator.
7. Dilute acid to venturi.
8. Phosphorus feed to combustion chamber. (Start phosphorus feed at about one-third design rate and gradually increase to design rate during a 15- to 20-minute period.)
9. Cooling water at low rate to product acid cooler.
10. Makeup hydration water to the separator tower.

Routine

1. Frequently check flows, levels, pressures, temperatures, water pH, and acid densities and adjust. to maintain prescribed conditions.
2. Adjust flows of cooling water while the phosphorus feed is being increased to keep the outlet water slightly below a prescribed maximum temperature.
3. When changing the acid production rate or concentration, gradually adjust the dilute acid flow to the product acid cooler tank and then adjust other conditions to prescribed limits.
4. Adjust flow of makeup hydration water to maintain a constant level in dilute acid receiver tank.
5. Adjust the recycle acid flow to change the temperatures of acid and gas leaving the hydrator.
6. Keep an accurate record of phosphorus in the feed tank and when the level decreases to 15% of tank capacity, start feeding from the other full tank to maintain a continuous flow of phosphorus to the combustion chamber.

Shutdown

1. Stop the phosphorus feed first.
2. As soon as the temperature of the air entering the hydrator decreases to about 200° F, stop the other flows.
3. When the plant is to be idle more than 2 hours and the atmospheric temperature is below 70° F, drain acid from the piping and pumps, and sparge just enough steam into the tanks to prevent acid solidification. When the plant is to be idle in standby more than 8 hours, add a small flow of dry air at the burner of the combustion chamber to prevent inleakage of air containing water vapor.

Inspection and Maintenance

1. Periodically pump sludge, that collects above the phosphorus, from the feed tanks.
2. At scheduled intervals, open and inspect process vessels.
3. Repair or replace any corroded part of the phosphorus burner unit before water leakage occurs.
4. Replace spray nozzles in the hydrator when slight corrosive or erosive damage is apparent.
5. Clean air filters and blowers on a set schedule.

USE OF SUPPLEMENTAL WET-PROCESS ACID

It is feasible to use wet-process acid (52%-54% P_2O_5) to supply a substantial proportion of the feed to a thermal acid plant as a supplement to elemental phosphorus (16). In tests and operating experience at TVA and another commercial plant, as much as 40% of the total P_2O_5 has been supplied as wet-process acid. The wet-process acid is used to replace all or most of the input water and is fed in the usual dilute acid circuits in the plant. The main potential problem is expected increased corrosion in the separator; some minor changes in design may be advisable. Quality of the product acid is not appreciably impaired although it is discolored due to impurities in the wet-process acid. In some situations, the use of supplemental wet-process acid can result in significant savings in production cost.

SURVEY OF COMMERCIAL PRACTICE OF THERMAL PHOSPHORIC ACID PRODUCTION

Location and Capacity of Operating Plants

Table 1 gives the location and the approximate capacity of plants known to produce thermal phosphoric acid. Figure 19 shows the total annual production of phosphoric acid in the United States and shows the relative proportions made by the wet and thermal processes. Total production is 4.9 million tons of P_2O_5. Wet-process phosphoric acid is about 3.85 million tons of P_2O_5 and furnace acid (thermal) about 1.05 million tons of P_2O_5. Only about 10% of thermal phosphoric acid is utilized in fertilizers with the bulk of this used in fluid products.

General Economics and Prospects

Battery investment costs for phosphorus burning phosphoric acid plants are given in figure 20. Generally, the total investment required to produce P_2O_5 via the thermal route (including furnace facilities for production of phosphorus) is about twice the investment for wet-process acid.

Operating Costs for Thermal Acid Plant

Table 2 shows the estimated production cost for thermal acid in a developing country using imported phosphorus. This estimate was taken from the previous TVA-USAID report *Technical and Economic Evaluation of Fertilizer Intermediates for Use by Developing Countries.* Cost of imported phosphorus in actual cases would vary above and below the estimated price shown.

Hignett and Striplin stated that the cost of producing phosphoric acid by the furnace process approximates the production cost by the wet process in hypothetical Florida plants where the cost of power is placed at 3 mils/kwh and the cost of sulfur at $35/short ton (17). They estimate the

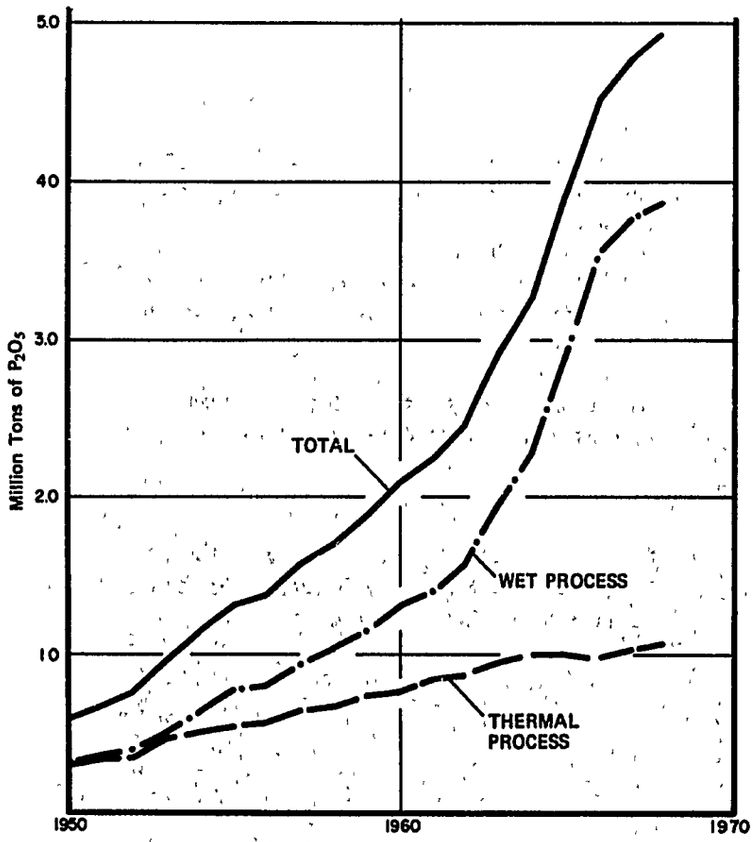

Figure 19. Phosphoric Acid Annual Production—U. S.

Table 1. Location of Thermal Acid Plants[a]

Country and company	Capacity, 1,000 short tons P_4/yr	Thermal acid plant site
United States		
Agrico Chemical (Conoco)	40[b]	Carteret, New Jersey
Colorado Fuel and Iron	–	Pueblo, Colorado
El Paso Products	21	Georgetown, Idaho
FMC Corporation	145[b]	Carteret, New Jersey
		Lawrence, Kansas
		Newark, California
		Green River, Wyoming
Goodpasture, Inc.	19	Brownfield, Texas
Hooker (Occidental)	75[b]	Adams, Mass.
		Columbia, Tenn.
		Dallas, Texas
		Jeffersonville, Ind.
		Niagara Falls, N. Y.[b]
Mobil Chemical	36[b]	Charleston, S. C.
		Cincinnati, Ohio
		Gary, Indiana
Monsanto	245[b]	Addyston, Ohio
		Anniston, Ala.
		Augusta, Georgia
		East St. Louis, Ill.
		Kearney, New Jersey
		Long Beach, Calif.
		Trenton, Mich.
Tennessee Valley Authority	40[b]	Muscle Shoals, Ala.
Victor Chemical (Stauffer)	128[b]	Chicago Heights, Ill.
		Morrisville, Pa.
		Nashville, Tenn.
		Richmond, Calif.
		Silver Bow, Montana
		South Gate, Calif.
		Tarpon Springs, Fla.
Canada		
Electric Reduction Company of Canada	39	Port Maitland, Ontario
		Buckingham, Quebec
Africa		
African Metals Corporation, Ltd.	7	Kookfontein, Transvaal
Argentina		
Villa Aufricht y Cie	6	Buenos Aires
Australia		
Albright and Wilson	22	–
Austria		
Krems Chemie	4	Krems
France		
Coignet-Progil	19	Roches de Condrieu
Pierrefitte	20	Nestales
Germany, East		
–	28	Piesteritz
Germany, West		
Knapsack-Griesheim AG	34	Knapsack
Benckiser-Knapsak GmbH	–	Ladenburg-am-Neekar
India		
Excel Industries, Ltd.	–	Bombay
Italy		
Montecatini	5	Crotone
Japan		
Nippon Kagaku	29	Koriyama and Miharu
Rasa	4	Osaka
Rin Kagaku	7	Toyama
Netherlands		
Hoechst-Vlissingen N.V.	31	Vlissingen
Spain		
Odiel Quimica S.P.	–	–
Sweden		
Alby Nya Kloratfabriks AB	–	Avesta
AB for Kemisk Och Elektrokemisk Produktion	–	Avesta
United Kingdom		
Albright and Wilson	15	Portishead
USSR		
	100[b]	Chimkent
Yugoslavia		
Tovarna Dusika Ruse	–	Ruse

[a]Other small plants have been reported but data was not available.
[b]Phosphorus production capacity. Some phosphorus may go to processes other than that of acid.

Table 2. Estimated Production Cost for Thermal Acid in a Developing Country Using Imported Phosphorus

Phosphoric acid (95,000 mt of 76% P_2O_5 acid/yr,) Plant cost–$1,987,000[a]	$/mt of acid (76% P_2O_5)
Phosphorus[b] (0.332/ton @ $312.85)	103.87
Labor (0.17 man-hr @ $3.00)	0.51
Maintenance (5% of plant cost)	1.05
Electricity (40 kwh @ $0.01)	–0.40
Water, cooling (15 M[c] gal @ $0.02)	–0.30
Water, filtered (.08 M gal @ $0.10)	0.01
Sulfuric acid (6.35 lb @ $0.012)	0.08
Air (1.82 Mcf @ $0.02)	0.04
Supplies (20% of maintenance)	0.21
Analyses (20% of labor)	0.10
Insurance and taxes (2% of plant cost)	0.42
Depreciation (6-2/3% of plant cost)	1.39
Overhead (100% of labor)	0.51
Interest (8% of 1/2 plant cost)	0.84
Total production cost	109.73

[a]Based on construction in developing country with cost 1.3 times U.S. basis and including auxiliary facilities.
[b]Using assumed cost of $289/mt f.o.b., plus handling and shipping.
[c]M = 1,000.

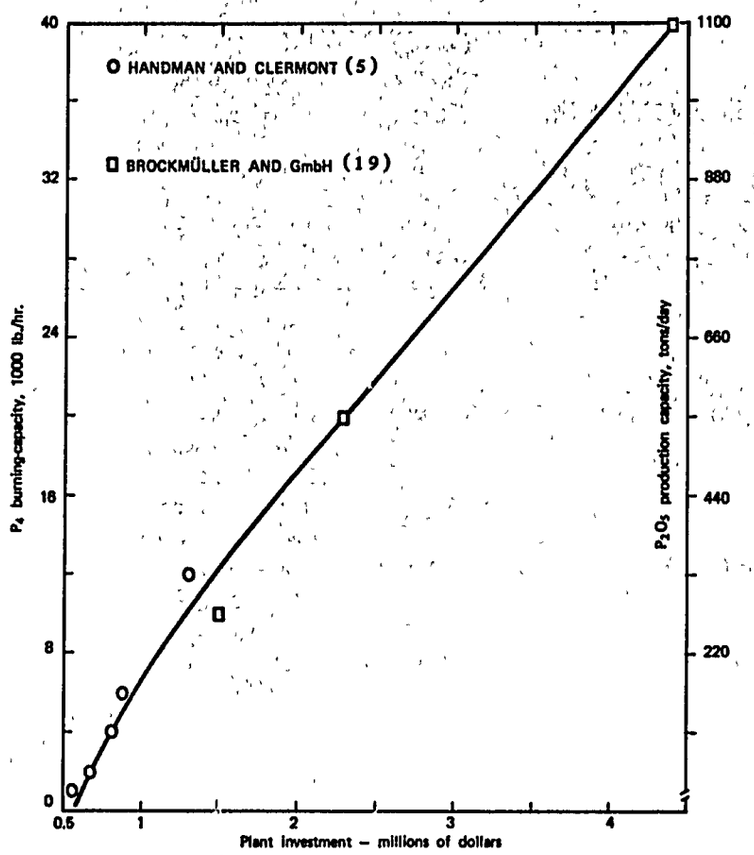

Figure 20. The Effect of Plant Capacity on Plant Investment Cost (Battery Limits)

cost of wet-process acid at $79.38/ton of P_2O_5 (600 tons P_2O_5/day) and of thermal acid at $76.32/ton of P_2O_5 (600 tons P_2O_5/day). Investment was indicated to be considerably higher for the phosphorus furnace and thermal acid system.

In a study by Wellman-Lord, Inc., thermal acid costs are shown to be competitive with wet-process acid at a power cost of 4.1 mils/kwh and a sulfur cost of $39.50/ton. Production costs are given as $83.35/ton P_2O_5 for super wet-process acid and $81.09/ton P_2O_5 for thermal acid in plants with 252,000 ton/year P_2O_5 capacity (18).

Brockmuller and Gmbh show that the costs of wet-process acid and thermal acid are competitive (19) with power at 3 and 4 mils/kwh and sulfur at $30.05 and $36.06/ton.

An article in *Phosphorus and Potassium* (July-August 1968) states that in most locations in Europe, the cost of wet-process acid remains much lower than that of thermal acid (20). It also states that there is little chance for thermal acid finding an outlet on the European market on the basis of purity, even if the difference in costs between wet-process and thermal acid becomes smaller.

Bowers, Fitch, and Kulp give the production cost of wet-process acid (gulf coast location) at $81.30/ton P_2O_5 and thermal phosphoric acid at $92.59/ton (300,000 tons/year P_2O_5). They give a price (including return on investment) for wet-process acid at $108.10/ton P_2O_5 and thermal acid at $140.69/ton P_2O_5 (21). They also state that if power were free, it would only decrease the cost of thermal acid by $21.20/ton P_2O_5 and wet-process acid will still be cheaper when return on investment is included.

REFERENCES

1. Hignett, T. P. 1969. "Trends in Technology," Sixth Francis New Memorial Lecture, The Fertiliser Society, London.
2. Ten Eyck, H. S. 1969. Keynote address at Fertilizer Industry Round Table Meeting, Washington, D.C.
3. Allgood, H. Y., F. E. Lancaster, Jr., J. A. McCollum, and J. P. Simpson. 1967. *Ind. Eng. Chem.*, 59(6):19-28.
4. Striplin, M. M., Jr. 1968. "Polyphosphoric Acid–Production by Furnace Method," IN *Phosphoric Acid*, Vol. 1, Part II, A. V. Slack, ed. Marcel Dekker, Inc., New York, N.Y.
5. Clermont Engineering Co., Inc., 1300 N. Ninth St., Philadelphia, Pa. 19122.
6. *Chem. Eng.*, 61(12):320-23, (December 1954).
7. Shaffery, R. J., R. H. Smith, and H. F. Groening. 1964. U.S. Patent 2,134,644.
8. *Chem. Eng.*, 61(9):115-16, (September 1954).
9. *Platecoil for Heat Transfer* (Product Data Manual No. 5-63). 1963. Tranter Manufacturing Company, Inc., Lansing, Michigan.
10. Otto H. York Company, Inc., West Orange, N.J.
11. Wilfley, A. R., and Sons. 1968. *Chem. Processing*, p. 79.
12. Beveridge, G. S. G., and R. G. Hill. 1968. *Chem. Process Eng.*, 49(8):63-70.
13. Powell, Sheppard T. 1954. *Water Conditioning for Industry*, p. 276-82, McGraw-Hill Book Company, Inc., New York, N.Y.
14. Corrigan, P. A., V. F. Lyons, G. D. Barnes, and F. G. Hall. 1970. *Environ. Sci. and Technol.*, 4:116-21.
15. Chemical Safety Data Sheets: *Elemental Phosphorus*–SD-16 and TC-4; *Phosphoric Acid*–SD-70 and TC-2; *Sulfuric Acid*–SD-20 and TC-1; and *Ammonia Aqua*–SD-13; Manufacturing Chemists Association, 1825 Connecticut Avenue N.W., Washington, D.C. 20009.
16. Striplin, M. M., Jr., and F. P. Achorn. April 1970. Process for Production of Phosphoric Acid. U.S. Patent 3,507,614.
17. Hignett, T. P., and M. M. Striplin, Jr. 1967. *Chem. Eng. Progress*, 63(5):85-92.
18. Wellman-Lord, Inc. 1969. *Phosphorus and Potassium*, 39:27-28, 34.
19. Wolfgang Brockmuller, Friedrick Uhde GmbH. 1968. *European Chemical News, Large Plant Supplement*, 23:26-28.
20. *Phosphorus and Potassium*, 36:16-19, 59. (July-August 1968.)
21. Bowers, Q. D., Bryant Fitch, and R. L. Kulp. 1969. *Farm Chem.*, 132(4):48-56.

Bulletin Y-5 *June 1970*

NATIONAL FERTILIZER DEVELOPMENT CENTER TENNESSEE VALLEY AUTHORITY MUSCLE SHOALS, ALABAMA 35660