AGENCY FOR INTERNATIONAL DEVELOPMENT
WASHINGTON, D. C. 20523

BIBLIOGRAPHIC INPUT SHEET

FOR AID USE ONLY

1. SUBJECT CLASSIFICATION

A. PRIMARY: Agriculture — AF25-0000-0000

B. SECONDARY: Soil fertility,fertilizers,and plant nutrition

2. TITLE AND SUBTITLE

Training manual for fertilizer plant operators

3. AUTHOR(S)

(101) National Fertilizer Development Center,TVA

4. DOCUMENT DATE: 1970

5. NUMBER OF PAGES: 245p.

6. ARC NUMBER: ARC 668.6207.T297

7. REFERENCE ORGANIZATION NAME AND ADDRESS

TVA

8. SUPPLEMENTARY NOTES (Sponsoring Organization, Publishers, Availability)

(In Circular Z-17)

9. ABSTRACT

10. CONTROL NUMBER

PN-RAA- 197

11. PRICE OF DOCUMENT

12. DESCRIPTORS

Education
Management
Manuals
Manufacturing

13. PROJECT NUMBER

14. CONTRACT NUMBER

PASA TA (QA) 6-69 GTS

15. TYPE OF DOCUMENT

AID 880-1 (4-74)

5

TRAINING MANUAL

FOR FERTILIZER PLANT OPERATORS

Prepared for the
AGENCY FOR INTERNATIONAL DEVELOPMENT
By the
TENNESSEE VALLEY AUTHORITY
National Fertilizer Development Center
Muscle Shoals, Alabama

TABLE OF CONTENTS

To All Fertilizer Plant Instructors 3
Conveyors and Elevators 5
Crushers and Screens 20
Bins and Tanks 32
Dust Collectors 40
Weighing Equipment 47
Forklifts and Front-End Loaders 57
Sampling in a Fertilizer Plant 66
Packaging 83
Pumps and Compressors 88
Valves and Pipeline Flows 95
Filtering Equipment 102
Absorption and Spray Tower 110
Agitation and Its Importance 119
Overhead Cranes 129
Common Instrumentation 140
Burners 153
Centrifuges 160
Heating and Cooling Equipment 168
Granulating Equipment 180
Neutralization and Reaction Equipment .. 192
Concentration Equipment 201
Refrigeration Equipment 209
Preventive Maintenance 217
Lubrication 224
Safety 234

TO ALL FERTILIZER PLANT INSTRUCTORS

The purpose of this operator training manual is to help in the training of chemical plant operators in the developing nations. It is an effort to share with the chemical industries in the LDC's experience that has been obtained over many years of operation at the National Fertilizer Development Center. Our goal is to present, in a very simple and concise form, materials that will improve fertilizer plant operation. It is hoped that by using these materials the trainers in the evolving fertilizer plants will be able to rapidly and effectively upgrade the operators–and thus improve the operations of the plants that are and will be established to meet the fertilizer and food needs of the developing countries.

ANALYZE YOUR CLASS

In almost all cases, you will find that the education and background of the operators in your class vary widely. It will be almost impossible to set a pace that will be pleasing to all. After a session or two, you will be able to determine just how fast the material can be covered.

The pace should be slow at first. As the class becomes familiar with the material and your method of teaching, the pace can be accelerated. Watch for slow learners. Try to keep them from falling behind. Sometimes, a little extra help or encouragement from the teacher will give them the determination to keep up with the class and complete the course.

OUTLINE MATERIAL TO BE COVERED (LESSON PLANS)

It helps your students to have some idea as to how the course will be conducted. They should also have a clear conception of the purpose of the course and how it will help them.

Explain to the students that each chapter is arranged so that the instructor can give them a brief introduction of the material to be presented. The operation is next reviewed. The duties of the operator are covered in a general way for that particular operation. Suggestions and hints are given on how to obtain the best operation based on past experience in that particular field. Brief sketches are provided in the text so that the instructor can illustrate the subject on the blackboard or by other means. Suggestions are also given on preventive maintenance, lubrication, and safety. Explain to the students the importance of what is said. Several questions are provided on each subject to help stimulate interest and to emphasize key points.

The instructor should feel free to add to or modify the material provided in the text as warranted by time or situation. All of the material in the text should be presented so that the operator will have a basic foundation on these important subjects.

SPECIAL TIPS ON DEVELOPING LESSON PLANS

The most important assets of any instructor are sincerity, enthusiasm, and a knowledge of the subject. However, to really be effective, each instructor should have a lesson plan, preferably a written lesson plan. Lesson plans standardize training. They also help the instructor to:

1. Present material in the proper order.
2. Avoid omission of essential material.
3. Conduct classes according to a timetable.
4. Place proper emphasis on items covered.
5. Provide for student participation or involvement.
6. Gain confidence.

A lesson plan should contain the following:

1. *Title*––Indicates subject matter being taught. Should be clear and concise.
2. *Objectives*––Should indicate the purpose of the session or goals. Specifically, it should

indicate what the students are expected to know at the end of the session.

3. *Training Aids*---A list of all training aids such as actual equipment, charts, etc.
4. *Introduction*--Every lesson should be introduced to the class in a manner that will develop the interest of the group. It should give the students the scope and importance of the subject.
5. *Presentation*--This is really the meat of the whole lesson plan; this is the plan of action. It is the guide for putting across the ideas, information or skills the student should learn. It should indicate method of presentation, such as by lecture, demonstration, discussion, etc.
6. *Application*--A lesson plan should contain, if possible, some suggestions on how the information presented can be applied. Usually one or two students are experienced; have them tell the group how they apply such information to their work. In some cases, problems may be worked or exercises applied.
7. *Summary*--The summary restates the main points of the lesson and helps to strengthen the weak points in the instruction.

When students have a good background of experience, the discussion method of presenting information will be found to be most effective. In this method, the instructor gets the students to think and to talk. His best tools for promoting discussion are provocative questions, prepared in advance and inserted into the lesson plan. After such a discussion is started, the instructor leads and guides it and tries to get all students to participate.

When the information to be covered is new to the group, discussion accomplishes little, other than to pool ignorance. In such cases, the instructor must resort to other methods, such as lecture, controlled exercises, demonstrations, or some form of student involvement.

The above are just a few suggestions to help the instructor organize his presentation. The experienced instructor may have a good plan without much in writing, the less experienced instructor may need a detailed written plan. In any event, good teaching demands good planning.

USE OF VISUALS

When preparation of the training manual was begun it was intended that slides mentioned in the text would be provided. Due to the cost involved, however, they cannot be included in all manuals. The slides are being assembled and copies can be purchased from TVA (for about $50) when available. Instructors also may have substitute visuals. Slides or photographs taken locally and pictures from magazines or books can be used effectively, as can sketches on the blackboard. Good use of visuals helps people learn faster and retain more.

TRAINING AIDS–CHECK LIST

1. Check classroom
2. Check equipment
3. Introduction–class and self
4. Make objective clear
5. Use lesson plan and manual
6. Use visual aids
7. Vary presentation
8. Introduce each new subject and explain
9. Refrain from using sarcasm or profanity
10. Talk to class
11. Never use words not understood by class
12. Cover material in each lesson and if time permits, use anecdotes or personal experiences
13. Be sure to summarize high points
14. Make clear class assignments
15. Conduct verbal examinations to test effectiveness
16. Keep meeting place orderly
17. Start and stop on time
18. Make attempt to know students and learn names
19. Never show favoritism
20. Insist on order

WHAT TO DO	WHAT TO SAY

1

Introduction

Welcome to the first session of Operator Training for Fertilizer Plant Operations. We will meet for ____ hour(s) each ____. There will be ____ other ____ -hour sessions.

2

In order to process materials into fertilizer it is necessary to transport or move them from one location to another. If the material is a solid, the term *conveying* is used for this operation.

There are many forms of conveying equipment we can use, depending on the nature of the material—that is, the size, shape, and the amount to be moved. We also must take into account whether the material is to be transported horizontally, vertically, or on an incline.

The more important conveyors and elevators are:

1. Belt Conveyor
2. Screw Conveyor
3. Pneumatic Conveyor
4. Chain Conveyor
5. Oscillating and Vibrating Conveyor
6. Bucket Elevators

3

Belt Conveyors

The belt conveyor is a simple piece of equipment. It is ideally suited to handling a wide variety of materials. It has few moving parts, involves a minimum of friction, and requires less power than any other type of power-driven conveyor.

Belt conveyors are light in weight, and require little head-room. They can be operated either horizontally or up or down inclines. They can be operated either low or at high speeds to produce any desired capacity.

Sketch on blackboard

Component parts of the belt conveyor are: the belt (usually made of rubber), drive pulley, rolls, and the tightener or take-up pulley.

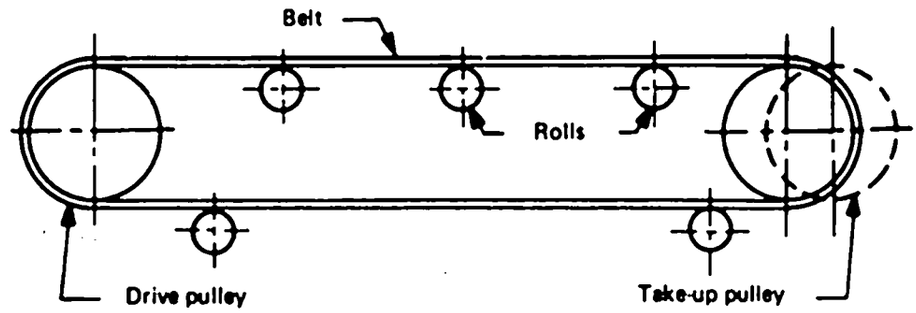

The simplest drive for the belt conveyor is a bare steel pulley actuated by a source of power, usually an electric motor.

Sketch on blackboard

The rolls for the belt may be flat,

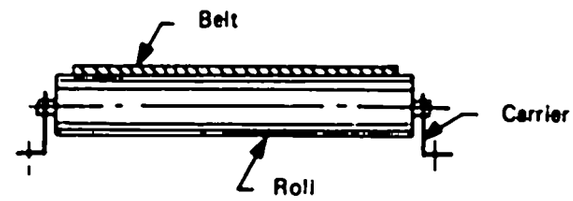

Sketch on blackboard

or, they may be troughed to prevent spillage of material.

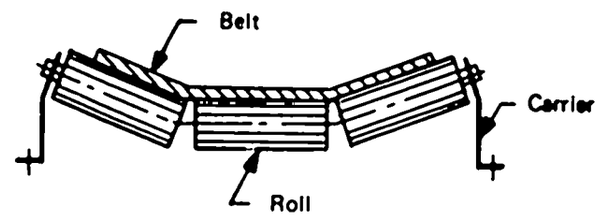

Stress this

The roller supports are usually called carriers. The better ones are carried on roller bearings equipped for pressure grease-gun lubrication. To obtain satisfactory operation of the conveyor, these fittings must be lubricated and the rollers kept free of spillage material.

Due to changes in load, weather, temperature, and humidity, the length of the belt will vary. In order to keep the proper tension on the belt, it will be necessary to be able to move one of the belt pulleys. It is called the take-up pulley.

4

The simplest method of getting material on the belt conveyor is by means of a hopper or bin. The material should be discharged from the hopper to the belt in the same direction that the belt is traveling.

5

Discharging the material from the belt can be done several ways. If it is to be discharged at the end of the belt, the material will fall off.

The discharge of the material at some intermediate point may be obtained by using a scraper to scrape the material off. Another method is to arrange the roller supports in such a way that the belt is tilted at an angle and the material slides off of the belt.

When it is desirable to discharge the material at several points along the belt, a device called a tripper may be used. A tripper consists of two pulleys mounted in a frame that travels on rails with the belt. The pulleys are so arranged that the belt is doubled back for a short distance. This causes the material to fall free into a chute, which discharges to either side of the belt.

Sketch on blackboard

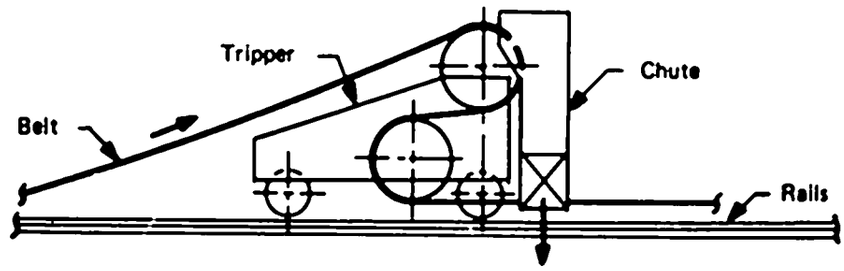

6

After starting the belt conveyor, check to see that it is not overloaded with too much material falling off the belt.

When in operation the belt should stay centered on its supports. If it shifts sideways, an adjustment of one of the pulleys may be necessary or some of the rolls may need cleaning.

Check the discharge from the belt often during operation; there is always the possibility of the chute plugging and causing a spillage of the material.

It is a good idea to check the belt several times a day for tears or wear. Also, check the point where the belt is joined together to make sure it is still in good repair.

All idle rolls should be inspected daily to see that they are free-turning and not blocked by material that has fallen from the belt.

Any wet material that may have become coated on the rolls should be removed. This will prevent further building up of material which may cause misalignment and injury to the belt.

7

Preventive maintenance

The belt conveyor should be inspected at least once each week for repairs. Check to see that:

1. All rolls are turning freely and are properly seated and held in brackets.
2. Material has not accumulated under rolls or rollers.
3. Bearings and bearing seals are lubricated.
4. Belt conveyor drive unit is in good condition and properly lubricated.

8

Lubrication

The belt conveyor speed reduction drives should be flushed after the first 100 hours of operation, and filled with new oil. In normal service, change oil every 2500 hours or at least semi-annually. In severe service change oil every one or three months. Make sure bearing-oil rings turn freely.

Lubricate plain bearings weekly and anti-friction bearings every three months with the proper lubricant. Every six months, flush grease lubricated anti-friction bearings with mineral spirits, dry, and repack (1/3 capacity).

Blow out motors with clean compressed air at reduced pressure. Lubricate motors every six months or 4000 hours of operations.

9

Safety

Never attempt to clean under rollers, head or tail pulley while belt conveyor is in operation. Do not service or lubricate any part of the belt conveyor while it is in operation.

Stress this

Many serious accidents have occurred in attempting to clean near the tail or take-up pulley while the belt is in operation and also while applying material to the drive pulley to prevent the belt from slipping.

Before working on or cleaning the belt conveyor or drive unit, pull the electrical switch that supplies power to the motor and place a hold tag on it.

Better still, also remove the fuses from the switch box. Be careful when operating a long inclined conveyor. If the power should fail, the material load on the belt will cause it to run backward.

10

Questions

What will cause material to spill from the belt? (Get random ideas of class. Write them on the blackboard.)

We can see that there are several reasons. The main ones are:

1. Belt overloaded.
2. Width or speed of belt not suitable for material being conveyed.
3. Incline of belt too great for material being conveyed.

Why should this material be cleaned up? (Get class reaction.)

For one thing, the material costs money. Second, the spilled material is a safety hazard; and third, it will cause greater wear on the belt, pulleys, and roller supports if they come in contact with the material.

Why is it dangerous to clean or service the belt conveyor or belt conveyor drive when it is in operation? (Get class reaction.)

Emphasize

The danger of injury to the operator and the possibility of damage to the equipment.

Why is this especially true of the drive pulley and take-up pulley? (Get answers from class.)

Experience has shown that numerous serious accidents have occurred when operators or maintenance men have had their hand or arm caught between the belt and pulley.

11

Show slides

We will now look at some slides showing belt conveyors. The first slide shows a flat belt conveyor. (Point out main parts.)

The second slide shows a belt conveyor in which the support rollers are troughed so that the belt can carry more material with less spillage. (Ask class why.)

The next slide shows a belt conveyor in whicl. pilled material has been allowed to build up under the belt. This causes excess wear and maintenance.

The last slide shows an inclined conveyor.

12

Questions

Are there any questions about the material covered on belt conveyors?

I have one question I would like to ask the class: At what angle can you convey material up an incline? (Get class reaction.) Of course, it will vary depending on the nature of the material. Some materials can be conveyed at an incline of 20 degrees or more.

13

Screw Conveyors

The screw conveyor is used to transport finely divided solids or pasty solids. It consists essentially of a spiral blade revolving around an axis in the bottom of a U-shaped trough.

Sketch on blackboard

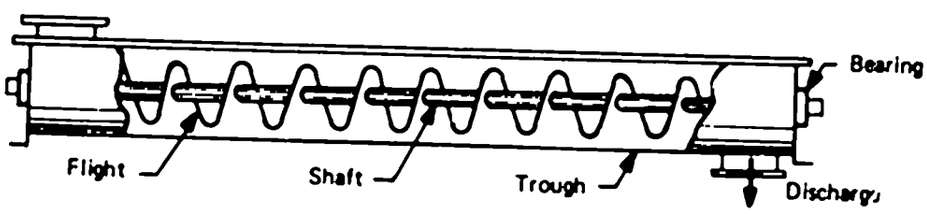

The screw element is called a flight. It may be sectional, helicoid, or special.

The screw-conveyor trough may be made of wood with a steel liner or of all steel construction.

It is necessary that the shaft which supports the spiral blade be suspended by suitable hangers. This is to keep it in alignment in the trough.

Sketch

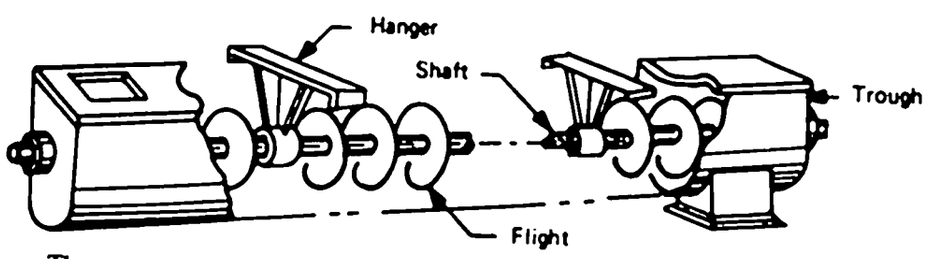

The screw conveyor can be used as a mixer as well as for conveying.

14

When in operation, care must be taken not to overload the screw conveyor. When this occurs, the motor will "kick off" due to overload or the pin that connects one section of the shaft to another will shear.

When the screw conveyor stops conveying and the drive unit is still operating, remove the covers from the conveyor and look for stoppage or a section of the screw that is not operating.

15

Preventive maintenance

The screw conveyor should be inspected at least once each week. Check to see that the casting is dust tight and that bearings are lubricated and are not running hot.

The drive unit should be inspected for proper operation and lubrication. Note if excessive material is piling up at loading point.

16

Lubrication

Change oil in speed reducer after first 100 hours of operation and every 2500 hours of operation or every six months after that.

Blow out motor with clean compressed air once each month. Lubricate motor every six months or 4000 hours of operation.

Every six months, flush grease-lubricated anti-friction bearings with mineral spirits, dry, and repack (1/3 capacity).

17

Safety

Do not leave cover off trough when the screw conveyor is operating. This prevents dust from escaping. Serious injuries have occurred when arms or legs have been caught in the screw.

Stress

Use hold tags and pull fuses when working on or cleaning the screw conveyor.

Question

Can the screw conveyor convey material to a higher elevation? (Get class reaction.) Yes.

18

Show slides

The first slide shows a screw co. ·eyor with the cover removed. (Point out parts of screw conveyor.)

The second slide shows screw conveyors used to collect dust from dust collectors.

19

Pneumatic Conveyor

This method often is used to convey light, bulky materials. Several different types or systems are used.

The nature of the material determines whether it can be conveyed by air. It must be able to pass through piping and equipment without clogging and without being damaged. The material must be readily separated from the conveying air.

Stress this

The pneumatic conveyor consists essentially of a pump or fan that mixes a stream of air with the material and blows or pulls it through a pipe.

The unloading point has a receiver that separates the material from the stream of air. The receiver may or may not have bag filters to catch the fine particles. The household vacuum cleaner operates on the same principle.

Sketch on blackboard

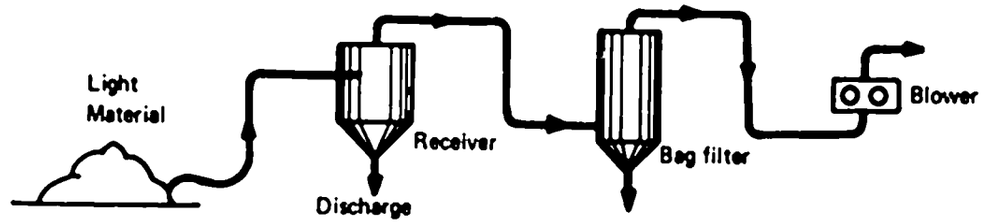

When in operation, care must be used not to overload the system. When this happens the material drops out of the flow of air and plugs the pipe.

Question

How do you unstop a system that has plugged? (Get answers from class.)

First, stop the feed. Then open ports of pipe joints in the line at the stoppage until you get the conveying air flowing again.

Sometimes hammering on the pipe will help locate the stoppage. If hammering will not unplug the pipe, try pulling as high a vacuum as possible and then releasing the vacuum. Do this several times.

If all of this fails, it may be necessary to cut holes in the pipe and rod or

blow out the line with compressed air.

Always remember to start air flow first and then start the feed to the system. When shutting down, stop the feed first and allow time for the system to clear itself before stopping the air flow.

Emphasize

The principle is to start air flow first and stop it last so that no material is trapped in any part of the conveying line.

20

Preventive maintenance

The pneumatic conveyor should be inspected at least once each week. Inspect the air blower or vacuum pump for proper operation and lubrication.

Check equipment access doors, inspection ports, and flanged joints for tightness.

Check all weight- and spring-loaded relief valves for free movement.

Check rotary airlock feeders and gates for proper operation.

Inspect receivers and dust filters for proper operation.

21

Lubrication

All gear and oil cases should contain the prescribed lubricant and be filled to the proper level. Vent plugs should be open.

In normal service, change oil in oil cases every 2500 hours of operation or at least semi-annually. In severe service, change oil every one or three months. Make sure bearing-oil rings turn freely.

Lubricate plain bearings weekly and anti-friction bearings every three months.

Every six months, flush grease-lubricated anti-friction bearings with mineral spirits, dry, and repack (1/3 capacity).

Blow out motors with clean compressed air at reduced pressure every month. Lubricate motors every 6 months or 4000 hours of operation.

22

Safety Do not attempt to clean or repair any rotating equipment without first immobilizing the equipment so that it cannot be started.

The first slide shows the nozzle picking up the material.

Question What happens if the operator feeds too much material to the system? (The system will stop up.)

The second slide shows a pneumatic conveyor connected direct to the transport car.

Question Before starting to unload the car, what should the operator do? (Aerate the contents of the transport.)

23

Chain Conveyors

A large and very important type of conveyor depends on the chain and chain attachments for conveying.

The type of chain conveyors available are so varied that it is difficult to bring them into one simple classification.

When the distance is short, the load light or heavy, abrasive or non-abrasive, hot or cold, a chain drive conveyor suitable for the job can be obtained.

The scraper conveyor is simple to build and is suitable for a wide range of conditions. Its disadvantages are its high power requirement and degradation of the product to some extent.

The flight conveyor is somewhat similar to the drag conveyor and is widely used in coal plants. It also has a wide variety of miscellaneous uses.

The apron conveyor is used for heavy loads and short runs. It can handle hot material. It can be used either horizontally or at an incline without degradation of lump size.

24

The chain conveyors should be inspected at least once each week.

Preventive maintenance

All chain joints should be free.

See that excessive material is not piling up at loading point.

Check sprockets for excess wear and replace if necessary.

Repair any bent flights or aprons. If not repaired this will cause excess wear on chain sprockets.

25

Lubrication

Lubricate bearings and other parts equipped for lubrication at least once each week. When a bearing runs warmer than 150° F., it should be washed and regreased.

Chain casings should have enough oil in them to allow clipping of the chain in the oil. At no time should dirty oil be allowed to remain in the casing.

All gear and oil cases should contain the prescribed lubricant and be filled to the proper level. Vent plugs should be open.

In normal service, change oil in oil cases every 2500 hours of operation or at least semi-annually. In severe service, change oil every one or three months. Make sure bearing oil rings turn freely.

Blow out motors with clean compressed air at reduced air pressure. Lubricate motors every six months or 4000 hours of operation.

26

Safety

Never attempt to clean, lubricate, or repair chain conveyors while they are in motion. Always immobilize the equipment before cleaning or making repair if there is any possibility at all of being injured if the equipment should move.

27

Show slides

The first slide shows a scraper conveyor.

Question

Why is its power requirement large? (Scrapes material along walls of container.)

The second slide shows an apron conveyor.

Question What are its advantages? (Can convey heavy loads and large size material. Also, it can convey hot material.)

28

Oscillating and Vibrating Conveyors

Oscillating and vibrating conveyors are used to convey materials because of their versatility and low maintenance characteristics.

Material must be of such nature that it will not stick to pan.

The oscillating conveyor moves the material by moving it upward and in the direction it is to travel.

Sketch on blackboard

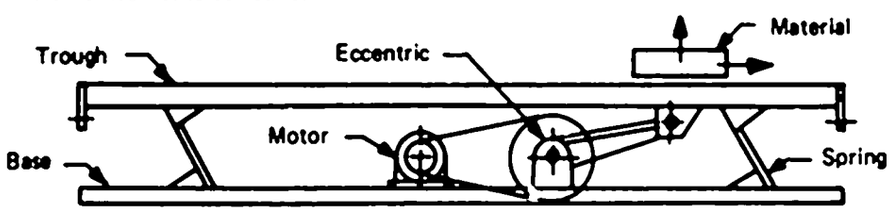

The vibrating conveyor may be electromagnetic, hydraulic, or mechanical. It operates in the same manner as the oscillating conveyor in that the material is moved by a series of throws and catches in the direction that it is to move.

During the upward and forward stroke, the conveyed material leaves the conveying trough. While it is in the air, the trough makes its backward and downward return. The trough is then ready for another stroke.

29

Since the vibrating conveyor has no moving parts, it gives very little trouble in operating.

Material should not be allowed to pile up against it since this would change the frequency of the vibrations and interfere with conveyor operation.

If material starts to build up or stick to the conveyor, it sometimes can be shaken loose by increasing the vibrations momentarily.

30

Preventive maintenance

Except for the vibrating trough, there are no moving parts, and hence very little maintenance for this type of conveyor.

The unit does need to be kept clean and material must not be allowed to pile up around it. This would change the natural frequency of the conveyor and decrease its capacity.

The system should be inspected at least once each week. Check to see that all of the springs are intact and in their proper place.

31

Lubrication

All fittings on the oscillating conveyor should be lubricated weekly and anti-friction bearings every three months.

Every six months, flush anti-friction bearings with mineral spirits, dry, and repack (1/3 capacity).

Blow out motors with clean compressed air at reduced pressure every month. Lubricate every six months or 4000 hours of operation.

32

Safety

Do not attempt to clean or repair the equipment without first immobilizing it.

33

Show slide

The slide shows a vibratory feeder.

Question

What advantage does it have over other type feeders? (Low maintenance, self cleaning, and ability to handle hot materials are a few.)

34

Bucket Elevators

If a straight vertical lift of the material is necessary, some form of elevator is used.

The most common type of an elevator for lifting material in a plant is called a bucket elevator. It consists of a series of buckets carried either on chains or on a belt.

The most common practice is to fasten the buckets to a chain, or, in some cases, to two chains.

Sketch on blackboard

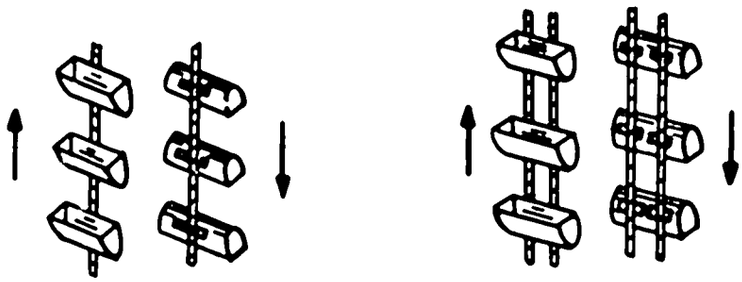

Sketch on blackboard

The material being elevated is discharged from the bucket at the top of the elevator.

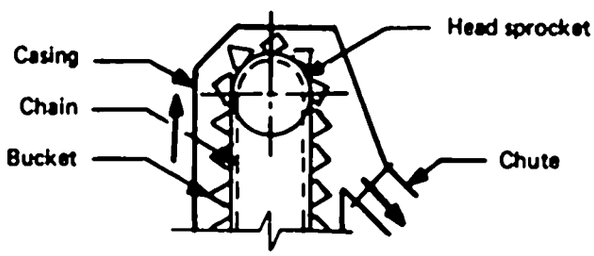

Elevators may be run without any casing around them. Most are enclosed, however, to prevent spillage of material and for dust control.

The buckets are filled at the bottom of the elevator from a chute or by digging into loose material at the bottom of the elevator.

This part of the elevator is called the boot.

35

After starting the bucket elevator, the operator should listen to determine if everything sounds normal. The buckets will strike the housing if there is too much slack in the chain or if one of the buckets is bent.

If the elevator motor should "kick out" while operating, stop feed immediately and look for overload conditions or a blockage of material in the bottom of the elevator.

36

Preventive maintenance

Inspect the elevator at least once each week for damaged buckets and chain links. Replace if any are found. The chain should be tight enough so that buckets will not hit the housing.

If material tends to harden in the boot, it may be necessary to dig it out. It may be necessary to periodically clean out the buckets.

37

Lubrication

All gear and oil cases should contain the prescribed lubricant and be filled to the proper level. Vent plugs should be open. In normal service, change oil in oil cases every 2500 hours of operations or at least semi-annually. In severe service, change oil every one or three months.

Chain cases should have enough oil in them to allow dipping of the chain in the oil. At no time should dirty oil be allowed to remain in the casing. Check to see that bearing oil rings turn freely.

Lubricate plain bearings every week and anti-friction bearings every three months.

Every six months, flush grease lubricated anti-friction bearings with mineral spirits, dry, and repack (1/3 capacity).

Blow out motors with clean compressed air at reduced pressure each month. Lubricate every six months or 4000 hours of operation.

38

Safety

Do not clean out or work on equipment without first immobilizing it.

When inspecting chains and buckets, be careful that chain and buckets do not "back up" and catch hands or clothing.

39

Show slide

The first slide shows a bucket elevator located in a sump.

Question

What is the disadvantage of this? (It is difficult to keep the sump clean.)

The second slide shows the buckets and chain at the inspection door.

WHAT TO DO	WHAT TO SAY

1

Introduction

In this session we are going to discuss crushers and screens. Crushing, the operation that subdivides solids mechanically, can be thought of as coarse, intermediate and fine crushing or grinding.

There are three types of coarse crushers–jaw, cone, and impact. Intermediate crushers are roll, gyratory, and impact. Fine crushing or grinding is done by the various roll or ball mills.

2

The jaw crusher consists essentially of two plates or jaws–one stationary and the other movable. Material is crushed when the movable jaw compresses it against the stationary jaw.

On the back stroke, crushed material drops free from the jaws.

Sketch on blackboard

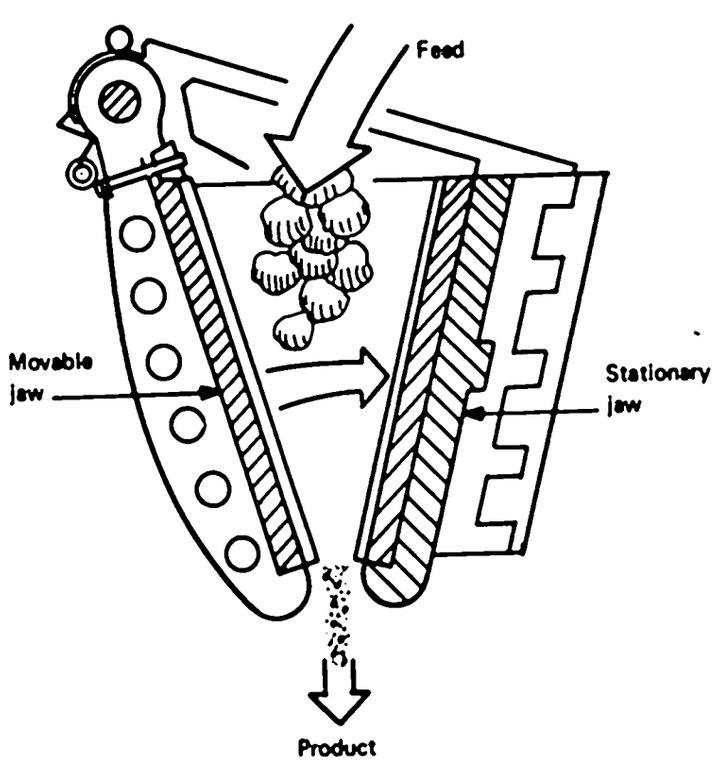

The cone or gyratory crusher consists of a shaft fitted with a conical crushing head inside of a bowl.

The lower end of the shaft moves in an eccentric fashion. Material feeding into the bowl by gravity is crushed when the shaft presses it against the sides of the bowl. Crushed material drops free when the shaft moves inside the bowl due to its eccentric motion.

The cone crusher is more efficient than the jaw crusher.

Sketch on blackboard

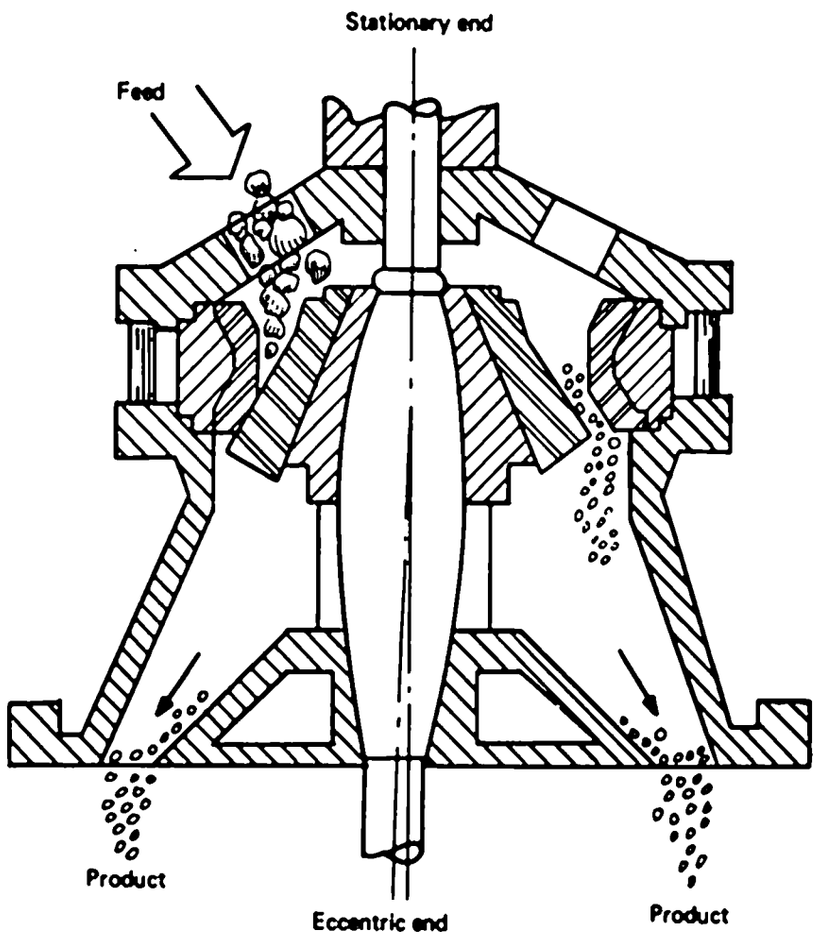

3

The impact crusher is the most important type used in the fertilizer industry. Material is fed in at the top or center, and is thrown out centrifugally and crushed by being beaten between the hammer bars, or against breaker plates.

Sketch on blackboard

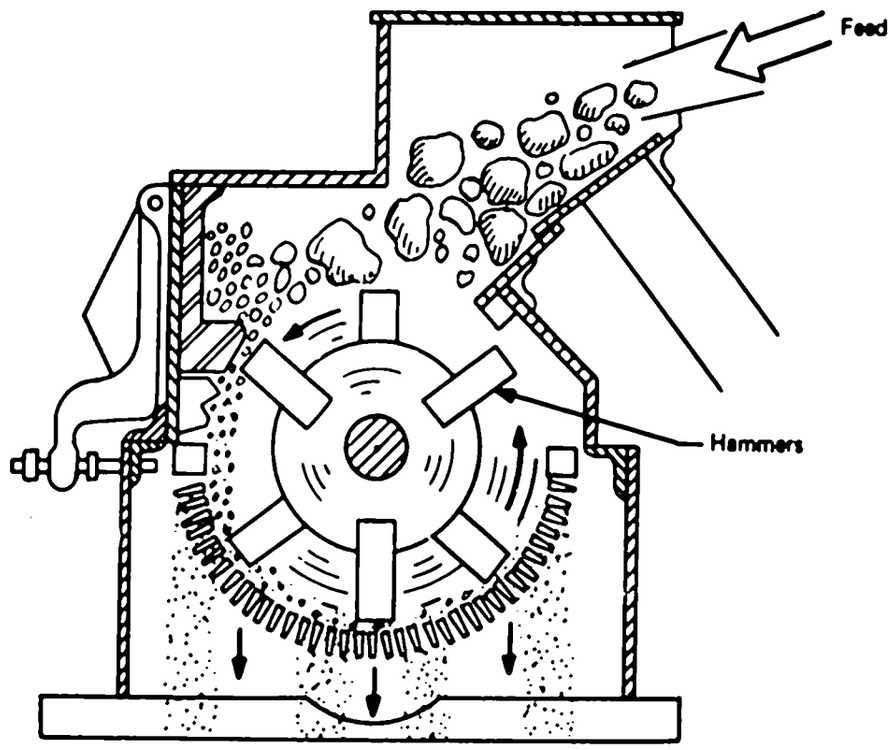

The material is beaten until it is small enough to fall through the screen which forms the lower portion of the casing.

The impact crusher may be of the swing-hammer, chains, or squirrel cage disintegrator type.

Stress this

The impact or hammer mill type crusher is gaining in popularity; in some instances, it is even being used in place of the jaw or cone crusher as a coarse crusher. The reason is that more of the finished product can be obtained with the first crushing.

Stress this

The roll crusher may be of one or two roll designs. It crushes by wedging the material between the revolving roll and a breaker plate or between two revolving rolls.

The purpose of the movable roll is to permit the rolls to separate in case tramp iron gets into the feed.

Sketch on blackboard

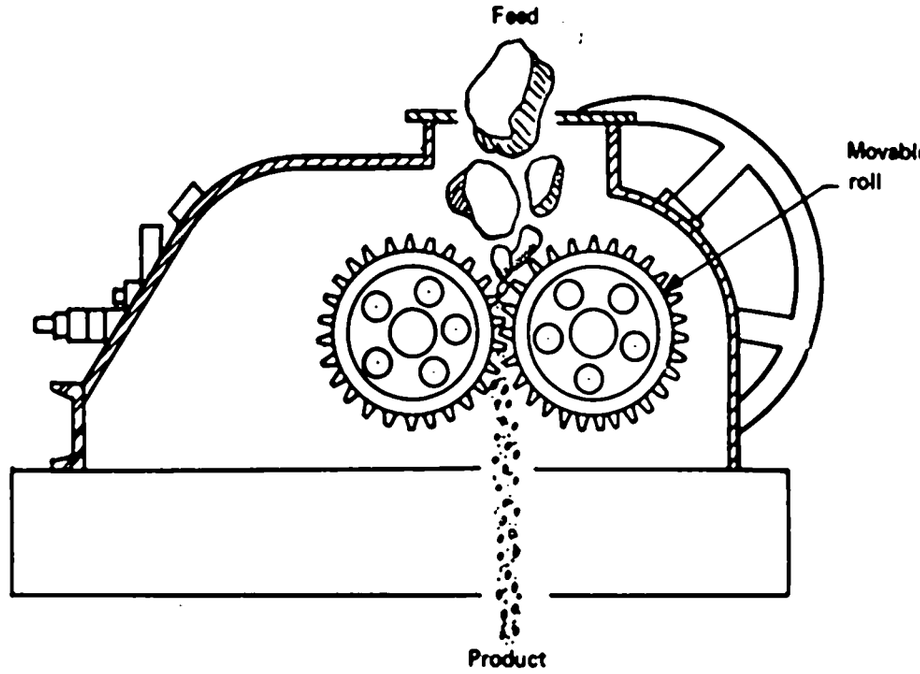

4

Fine crushing or grinding is done in several different ways. We will consider two types. One is the centrifugal attrition type mill that employs balls or rollers to roll over the material held in a bull ring. The rollers or balls held against the bull ring by centrifugal force do the grinding.

Sketch on blackboard

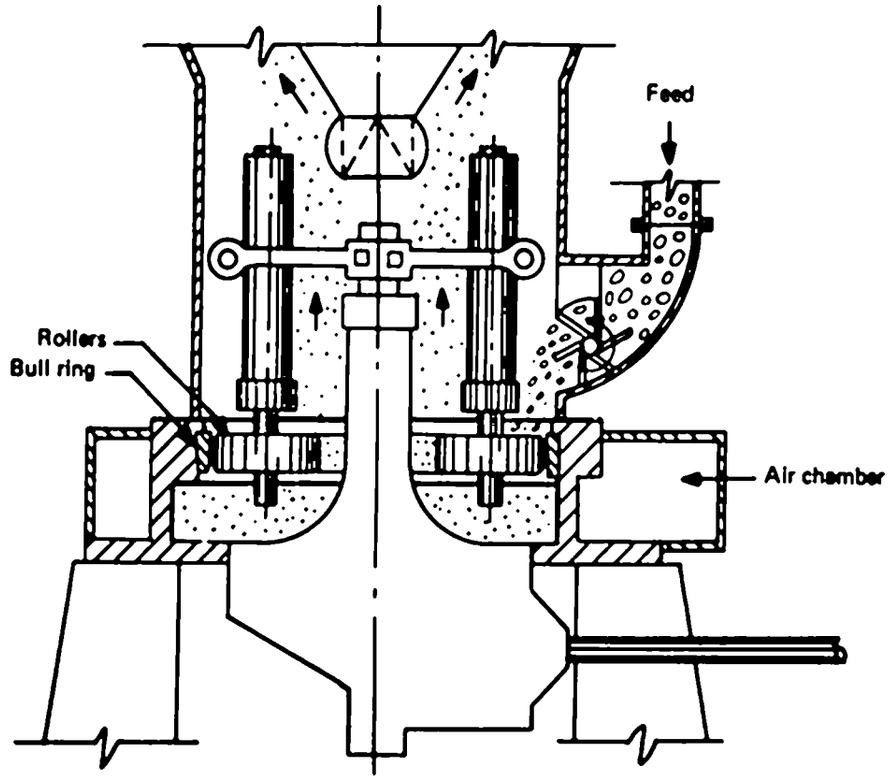

Note

An upward stream of air continuously removes the ground material. The fineness of the product is controlled by the rate of feeding and the air velocity.

The Ball Mill is the second type of fine grinding that we will consider. In its simplest form it is a rotating hollow cylinder partially filled with balls.

The feed enters at one end and the fine material leaves through the other end.

Sketch on blackboard

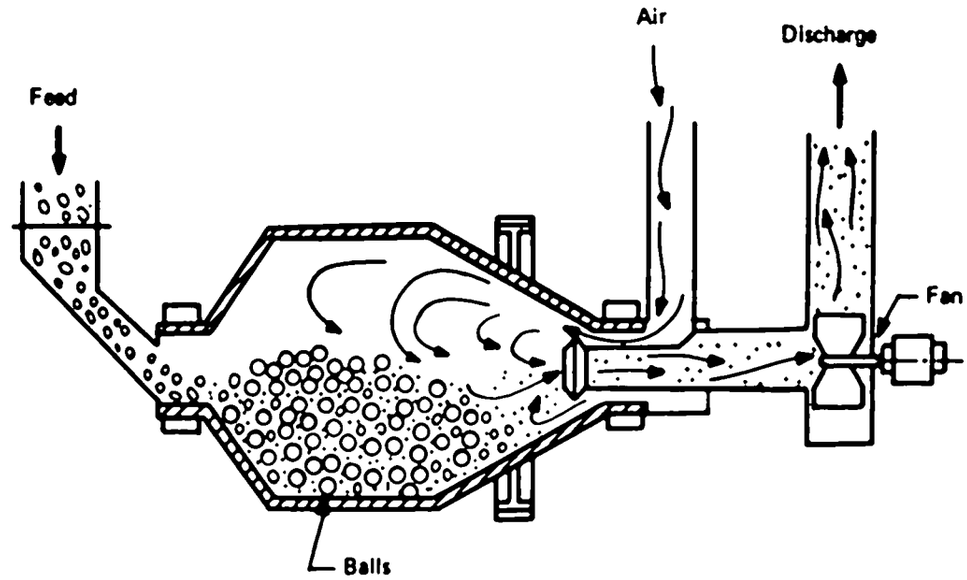

Emphasize

The load of balls, size of the balls, speed of rotation, and rate of feed are factors that control output and size of the product.

Ball Mills have a low cost of installation. Power costs are also low. They can grind wet or dry material.

5

Preventive maintenance

Make periodic inspections of the crushers. It is important that all nuts and bolts be tight and that wearing parts are in good condition.

Always shut off the feed and allow crushers to empty themselves before shutting down.

Also start the crusher and allow it to come to operating speed before starting feed.

Do not operate crusher if excessive vibration or unusual noise should develop without checking to see what is causing it. It may be necessary to take the crusher out of service for repairs.

6

Check points for operators

The operator on duty should check to see that:

1. There is no accumulation of material around any vital part that will cause excessive wear or vibration.
2. The bearings and bearing seals are properly lubricated, and are not running hot.
3. The drive unit is in good condition and properly lubricated.
4. The feed to the crusher is properly distributed; uneven wear and excessive vibration may result if it is not.
5. The crusher is operating properly; an occasional check of crusher product by hand screening will show the results.
6. The working area is kept as clean as possible.
7. The ventilation system is working properly.
8. There is no buildup in chutes that would lead to a stoppage.
9. The ventilation system is operating by keeping the covers on screens, chutes and other equipment. It may be necessary to plug some holes or place temporary covers over openings until permanent repairs can be made.

7

Lubrication

Follow the manufacturer's recommendation on lubrication. Most of these will be covered in Chapter 24–LUBRICATION

If any equipment part starts running hot or makes an unusual sound, check immediately for the cause.

8

Safety

Never attempt to clean or service a crusher while it is in operation.

Stress this

Pull the switch that supplies power and place a hold tag on it. It is a good idea to also remove the fuses from the switch box.

Be sure that the rotating element is not off center, and thus, likely to rotate slightly when you start to work, catching a finger or hand.

9

Questions

Why does the gyratory crusher have a greater capacity than the jaw crusher? (The gyratory is crushing continuously, whereas the jaw crusher is working intermittently.)

What is the disadvantage of crushing material that is highly abrasive? (It wears out parts of the crusher that come in contact with the material.)

Name three factors that affect the operation of a ball mill? (They are the speed of the mill, the amount of grinding media, and the amount of the material.)

Why should you always start a crusher under "no load" conditions? (It prevents an undue load from being placed on the crusher parts, drive unit, and power unit.)

10

Show slides

The first slide shows a jaw crusher. What are its main parts? (Frame. Stationary jaw. Movable jaw. Pulley and fly wheel. Journal boxes.)

The second slide shows a gyratory crusher.

The next slide shows a roll crusher.

The fourth slide shows an impact type crusher.

Question

Are there any questions from the class on crushers?

11

Introduction

Screening, or screen sizing, is the separation of a mixture of various sizes of grains into two or more portions, by means of a screen.

Many factors affect the rate at which undersize material may pass through a screening surface. The most important are:

1. The size of the openings.
2. The percentage of openings to total surface in the screen.
3. The angle at which the particles strike the screening surface.
4. The speed at which the particle strikes the screening surface.
5. The moisture content of the material that is being screened.

12

Different type of screens are:

Sketch and describe

1. Grizzlies, which are used for coarse screening of large lumps. They consist of a set of parallel bars held apart by spacers.

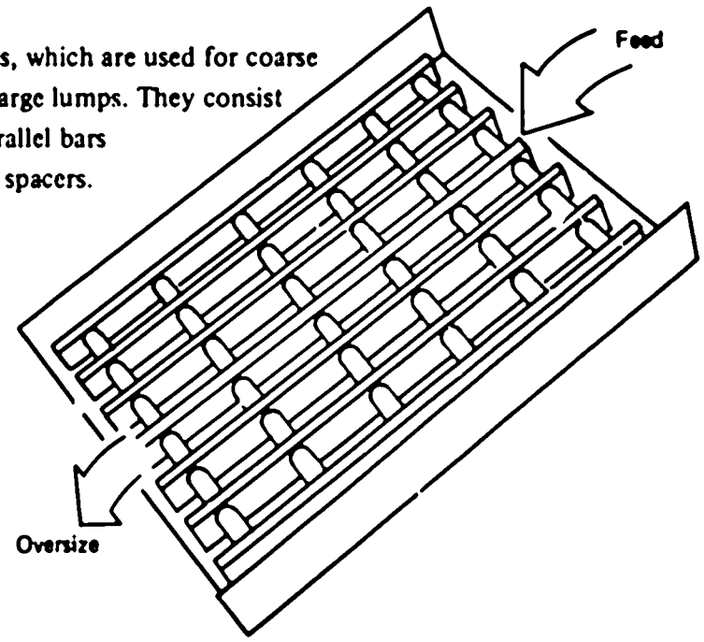

13

Sketch and describe

2. Trommels are rotating screens for fairly large particles.

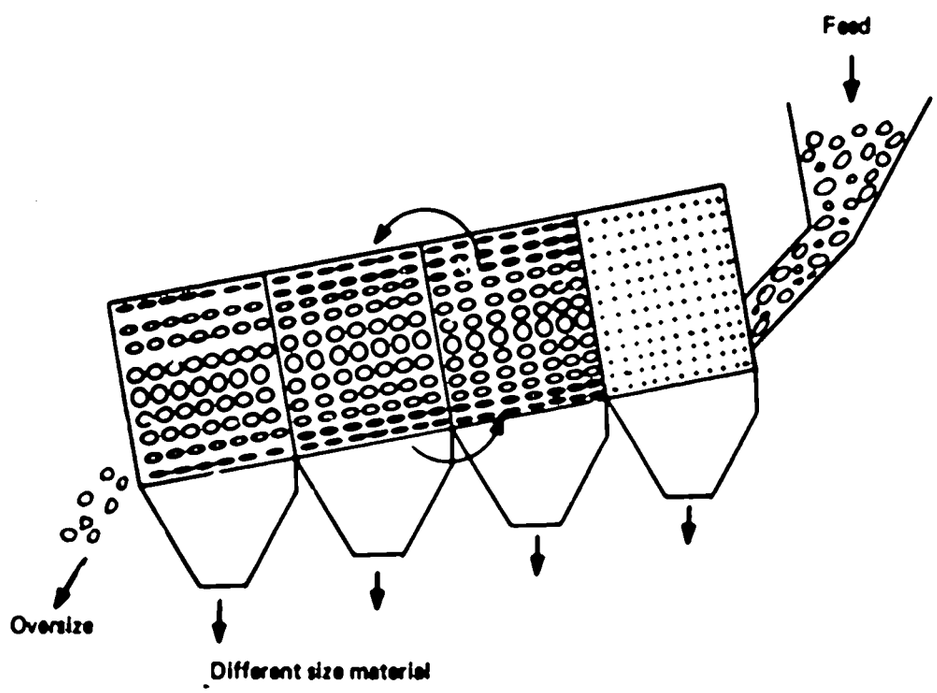

14

Sketch and describe

3. Shaking screens may be flat or slighty inclined. They may also shake with a circular motion.

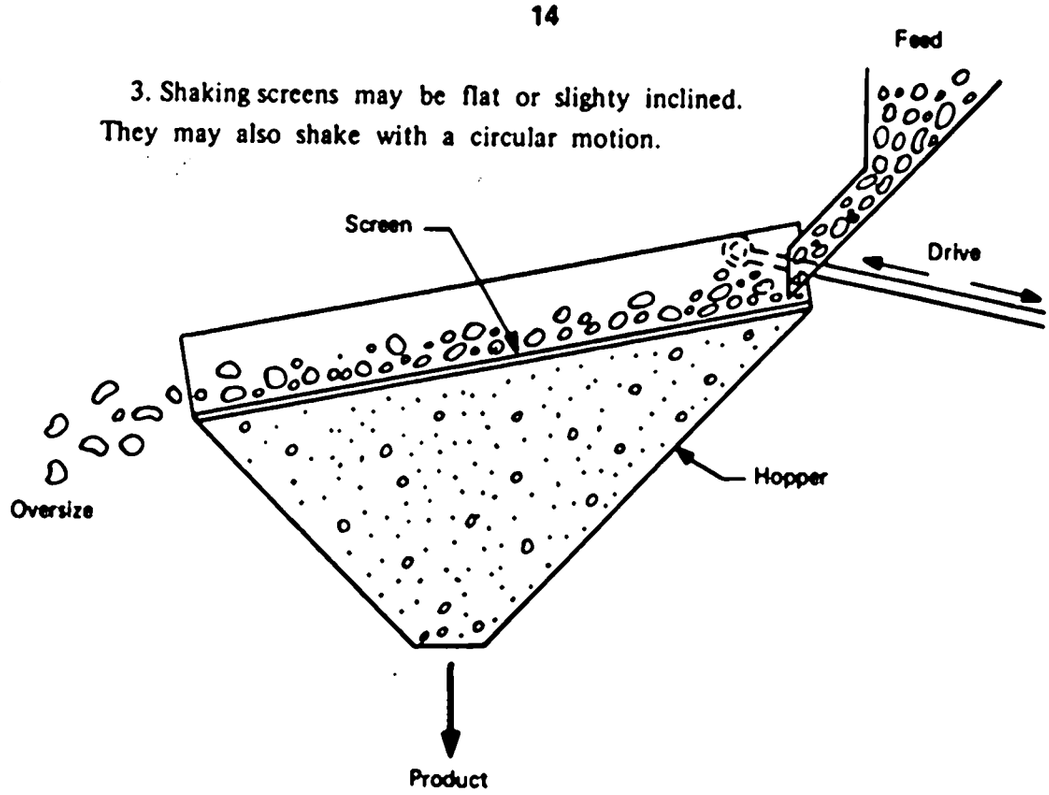

15

Sketch and describe

4. Vibrating screens have developed to the point where other types of screens are almost obsolete. Vibrating screens may also have rotary motion at the same time.

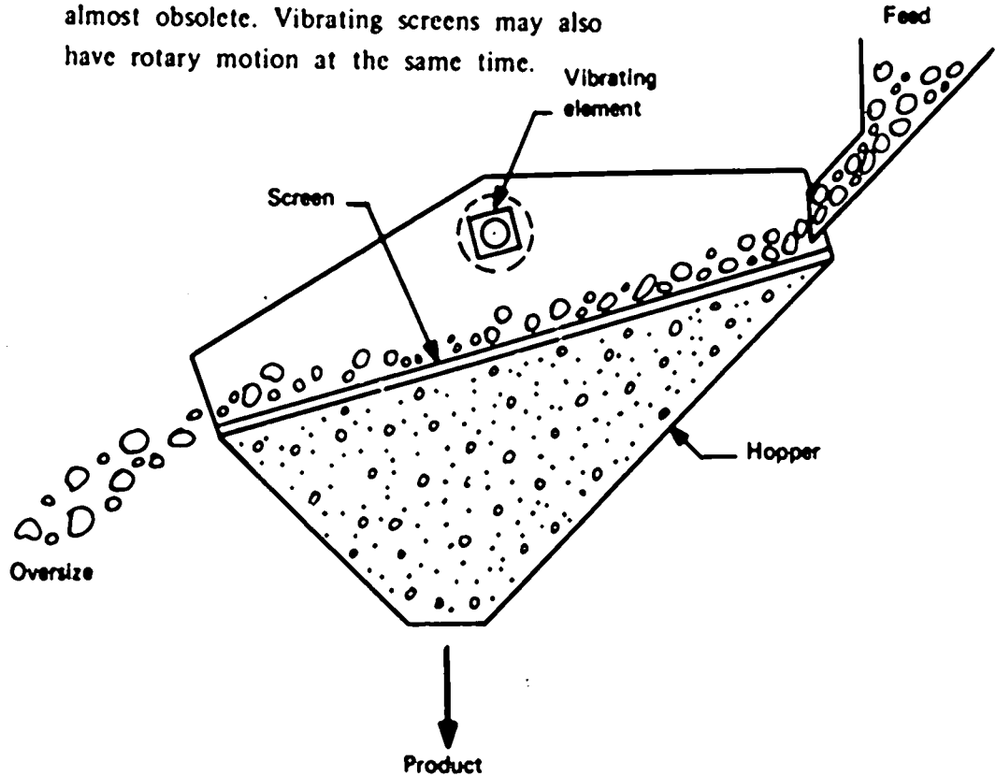

16

Questions

Why would you install a grizzly screen? (When you wanted a coarse separation.)

Why would you install a trommel screen? (When you wanted to screen coarse material into several different sizes.)

What advantage does a vibrating screen have over a shaking screen? (Larger capacity and higher efficiency.)

Why does it have a greater capacity? (The vibrations of the screen reduces the blinding, or stoppage, effect to a minimum.)

Why is it hard to screen damp or wet material? (Material clings to the wire screen and plugs openings.)

What do we mean when we refer to "mesh?" (The number of openings in the screen per linear inch.)

17

Preventive maintenance

The grizzly and trommel screens, by nature of their construction, give very little trouble.

Vibrating and shaking screens, however, require maintenance to operate properly.

Stress

A constant, systematic inspection of the screen will result in less down time and fewer repair bills.

Daily:

1. Check oil level, or grease mechanism and seals per instruction.
2. Check for loose bolts in mechanism.
3. Check mechanism when running for indication of excessive operating temperature.
4. Check V-belt drive and drive unit.
5. Check tension spring assembly.
6. Check for interference between screen body and surrounding structures.
7. Check screen surface for looseness or wire breakage.
8. Check flow of material over screen to see that it is evenly distributed.

Weekly:

1. Check oil or grease for contamination.
2. Check mechanism while running for noise or excessive operating temperature.
3. Check side plates for loose bolts, excessive wear or cracking.
4. Check clamping bars for looseness and excessive wear.
5. Check support frames for wear, cracking or breakage.

18

Lubrication

Details of equipment lubrication will be covered in Chapter 24–LUBRICATION.

Some vibrating and shaking screen mechanisms are grease-lubricated while others rely on oil.

Grease lubrication

Those that use grease should have the bearings lubricated every eight hours of operation. For a dusty installation, they should be greased every four hours.

Dust seals should be lubricated frequently so that a small amount of grease works out during operation to keep dust out of the mechanism. In a dusty atmosphere, lubricate about once every four hours.

Once each year, dismantle grease-lubricated mechanisms on screens and clean throughly and inspect all parts.

Oil lubrication

Check oil level at least once each 24 hours of operation on screen mechanisms that are oil-lubricated. Be careful not to get any dust into the oil when checking.

Initial oil change should be made after first 80 hours of operation. After that change oil every 300 hours of operation.

Bearings should be flushed periodically with an approved flushing compound and refilled with fresh oil.

19

The operator on duty should:

1. Check the operation of the screen at the start of the shift to see that material being screened is distributed over the entire width of the screen.
2. Check to see that the screen is screening properly.

3. Note product and oversize from the screen several times during the shift for any change of size of the material.

4. If the material being screened is hygroscopic by nature, watch for plugging of the screen when starting up after a delay.

5. Keep area around screen clean.

6. When cleaning the screen, the operator should not, under any conditions, beat on the screen in such a way as to deform or beat in the wire. This only compounds the problem.

20

Safety

Do not attempt to repair or lubricate the screen mechanism while it is in operation. Before doing so, pull the switch that supplies power and place a hold tag on it.

Some screens have a long shaft that operates the screen mechanism from the source of power. Avoid contact with the shaft, as a rough place on it might catch the operator's clothing and pull him into the shaft.

Questions

What is "blinding" of a screen? (Particles being screened plugs the openings in the screen.)

Are all screen cloths square mesh? (No. One type has long openings or rectangular slots.)

What is the advantage of this? (The open area is much larger, therefore, the screen has greater capacity. There is only a slight drop in the accuracy of separation.

Are there any further questions on screens?

WHAT TO DO	WHAT TO SAY

1

Introduction

It would be nice in a Fertilizer Plant if you could receive the raw material, process it into fertilizer, and move it on out wthout stopping. Unfortunately, it can't be done that way and material, both solids and liquids, must be stored from time to time during the processing.

Storage is necessary because of:

1. The intermittent reception of raw material.
2. Intermittent disposal of products.
3. Intermittent operations.
4. Desirability of providing against interruption in the flow of raw materials to the plant or products from the plant.

Storage can be accomplished by the use of stock piles, bins, tanks, or ponds.

In our discussion, we are going to cover bins and tanks, since this is the storage used within the plant for liquids and solids.

2

Bins are used for storage of solid material where the storage period is short.

Bins may be made of wood, concrete, or steel. They are designed in such a way that they can be discharged by gravity through a suitable gate, or by a feeder.

Sloping-bottomed bins can be built to discharge on one side, two sides, or from below.

The capacity of the bin depends on the service expected of it.

A surge bin placed between two pieces of equipment does not need the capacity of a bin that is supposed to hold a 24-hour or a 3-day supply.

Bin operation

The bins are filled through an open top, or through gates in a closed top.

Some bins are equipped with level indicating instruments to signal the operator when the bin is full or empty. One type of level instrument has a diaphragm mounted in the wall of the bin.

When the material pushes against the diaphragm, a contact is made, and a signal indicates the material is to that point.

Sketch on blackboard

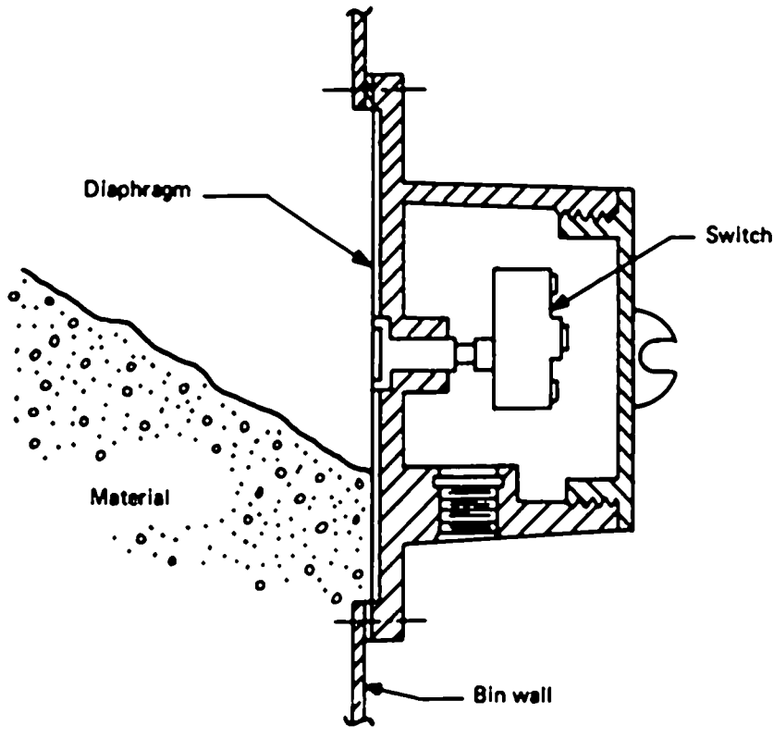

Another type has a small motor mounted outside the bin, turning a shaft that runs into the bin. A small paddle wheel is on the end of the shaft. When material rises to the paddle wheel and the wheel stops turning, a signal from the motor indicates the material is to that point.

In most cases, material feeds by gravity from the bin. With some materials, it is necessary to install mechanical or air agitators to keep the material loose and free flowing.

Sketch on blackboard

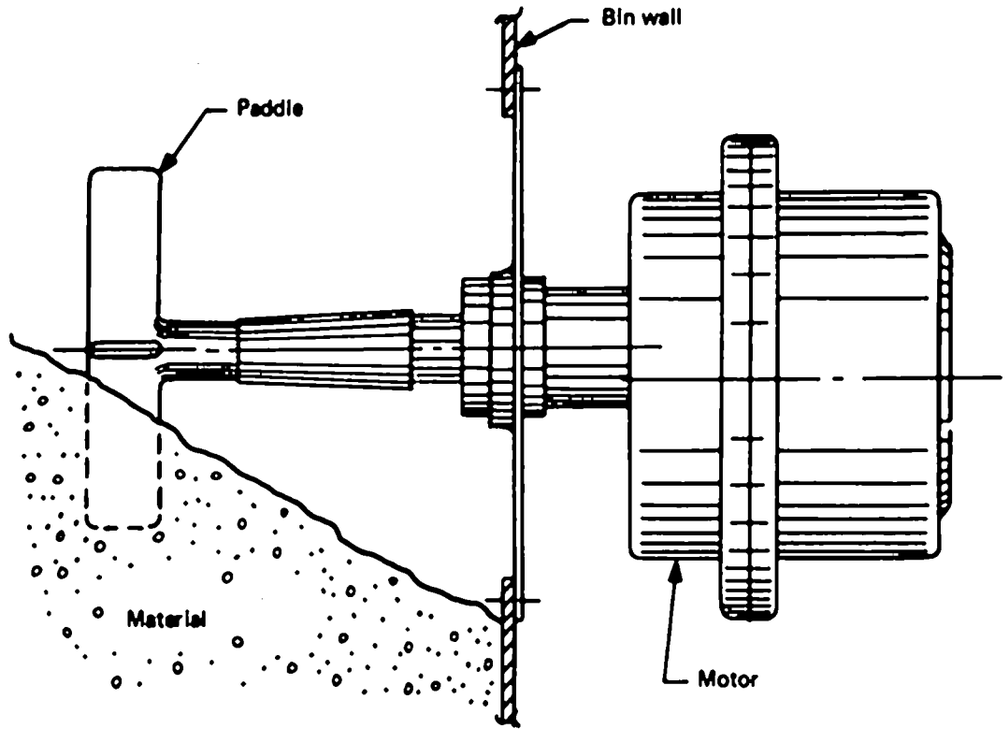

Sometimes it is necessary to install vibrators or mechanical knockers on The sides of the bins to shake the material loose when it sticks.

The vibrators should only be used to shake the material loose. Otherwise they would cause the material to pack and become fast in the bin.

If it should become necessary for the operator to hammer on the bins or chutes, thick metal plates should be welded to the bin or chutes at convenient points.

This will prevent the bins or chutes from being beaten out of shape by the hammer blows.

Wooden mauls are preferred for jarring the bins in place of steel hammers. If at all possible, the use of either one should be avoided so as to prevent damage to the equipment.

4

Operating duties

The operator on duty should check on the supply of material on rounds to and from the bins. He should not depend altogether on the instrument level control. Their malfunction could cause him to overfill a bin or run out of material.

When you overfill a bin, there is danger of damage to the conveying equipment.

When you run out of material, the manufacturing process is upset and sometimes a shutdown is necessary.

Experience will tell the operator just how often to check or measure the bin level.

Another method—which is not very accurate but it can be used on metal bins—is to strike the side of the bin with a hard object. The sound will tell the operator approximately where the level is.

If the material is dusty or gives off gases, all openings to the bin should be kept closed.

Stress this

The operator should keep a constant watch on the flows of material. Sometimes a stoppage in the bins or chutes will stop the flow.

The operator will learn how often he should rod certain bins, or which chutes should be cleaned periodically.

Any spills that do occur, should be cleaned up as soon as possible.

Any leakes or defects in the equipment that contributes to the spillage should be reported.

5

Safety

Many serious accidents have occured to operators who have gone inside of bins.

In some cases the operator went into the bin to free "hung up" material only to be buried alive when it broke loose. In other cases he has been overcome by the lack of oxygen or by fumes or other gases that he did not know were present.

If it should become necessary to enter a bin, do so only after:

1. The air in the bin has been sampled and found free of harmful gases.
2. The operator is equipped with a fresh air mask or the air in the bin has been sampled for oxygen.
3. He has on a safety harness with a lifeline extending to an attendant standing by outside the bin.

Do not enter a bin equipped with an arch breaker unless the drive mechanism has been immobilized and hold tags are in place.

Care should be used to see that material is not run to a bin when anyone is inside of the bin.

The conveying system to the bin must be immobilized and hold tags applied.

Blank all connections to the bin where there is a possibility of dangerous chemicals or gases entering while the operator is in the bin.

6

Questions

Why should openings in the material storage system be kept closed? (To prevent dust from escaping.)

Why should you avoid hammering on bins and chutes if at all possible? (Hammering distorts the shape of the bin or chute and quite often adds to the stoppage problem.)

Why should a wooden maul be used in place of a metal hammer? (Because it will not distort the metal as bad as a hammer.)

What is the danger of running out of material? (It will cause a shutdown of the process.)

If the area is dusty, should the operator wear a dust respirator? (Yes. Some dusts are quite harmful.)

7

Introduction

Storage of liquid materials used in the fertilizer plant is usually accomplished by the use of tanks.

Illustrate on blackboard

They may be vertical, horizontal, rectangular, or spherical. They may be constructed of metal, wood, concrete, rubber or plastic.

Ask class why

The nature of the material stored determines the construction of the tank. A tank that will store water may be unsatisfactory for the storage of acid.

Filling and drawing from liquid storage tanks are usually done with pumps. In some cases, gravity flow may be used. In other, gas pressure may

Illustrate on blackboard

be used to force the liquid from one tank to another, or from tank to process.

Quantities stored in the tank can be determined by the depth of liquid and the diameter of the tank. Quite often charts or tables are prepared that will tell the operator at a glance the amount of material in the tank from its height.

A float in the tank connected to a marker on the outside of the tank by a cable is one of the most common gages. Other use purge tubes, or diaphragms or more complicated equipment.

8

Operation

When filling a tank with liquid, the air space above the liquid will be displaced, or vented.

If the liquid is corrosive or toxic, care will have to be used as to where the fumes are vented. It may be necessary to pass the fumes through an equipment scrubber where they will be absorbed in a liquid.

Some materials will react with air and it may be necessary to shield the material in the tank with water or inert gas.

For instance, when storing phosphorus in a tank, it is necessary to keep it under a layer of water to keep it from coming into contact with air. Phosphorus will burn violently when it comes into contact with the oxygen in air.

Actually, it is the practice to keep the phosphorus storage tank filled with water. When phosphorus is pumped into the tank, due to its gravity, it stays in the bottom of the tank and forces water out the top.

When you want to remove phosphorus, water is pumped into the top of the tank and displaces the heavy phosphorus through a dip pipe from the bottom.

Very important

Remember, when you pump into, or remove liquid from a tank, it must be vented. There is danger of rupturing a tank when you pump into it, or collapsing one when pumping from it, unless it is vented.

If you clean a tank by steaming, always vent the tank at the end of the steaming period. This is to prevent the steam from condensing after the tank cools down and collapsing the tank.

9

Operating duties

During the shift when filling or emptying a tank, don't rely entirely on the level gages. Overflowing a tank not only is a waste of material but creates a housekeeping mess.

Sometimes it can be quite hazardous if the material is corrosive or toxic. Also, if the tank runs empty, it may shut down the process.

Occasionally, verify the accuracy of the level instrument if it is possible to do so. This can be done visually or by measuring with a stick or rod. Sometimes you can tell by the temperature on the side of the tank or by sounding.

Quite often it is necessary to maintain a specific temperature range of liquids in storage. The operator should check often enough to maintain the temperature specified.

10

Safety

Extreme caution should be used in entering a tank or vessel. Do not do so until:

1. The air in the tank has been sampled and found free of harmful gases.
2. The operator is equipped with a fresh air mask, or the air inside the tank has been sampled for oxygen.
3. He has on a safety harness with a lifeline extending to an attendant standing by outside of the tank.
4. Blank all connections to the tank where there is a possibility of dangerous chemicals or gases entering while the operator is in the tank.

Note

Care should be demonstrated about valves that are next to tanks filled with liquid. If valves should leak there is danger of spraying the operator or loosing the contents of the tanks.

Such valves should be equipped with face shields to protect the operator; that is, in case they should leak at the packing while being opened or closed.

Show slides

The first slide shows the storage of bulk material in an outdoor storage pile.

Point out main features of each slide

The second slide shows the storage of bulk material indoors. The overhead crane is used to take the material to and from storage.

The next slide shows an indoor storage bin.

This slide shows an outdoor storage tank farm of horizontal storage tanks constructed of steel.

An outdoor storage tank farm of vertical wooden tanks is shown in the next slide.

The last slide shows an indoor storage tank constructed of steel.

Are there any questions on bins and tanks?

WHAT TO DO	WHAT TO SAY

1

Introduction

Dust control is becoming one of the most critical problems in the fertilizer plant.

Air quality standards are being prescribed for different areas. Fertilizer plants that exceed these levels are in for trouble.

The fertilizer plant can benefit from the control of dust and fumes, since this does represent a loss. In most cases, the collected particles can be recycled into the process to improve the yields.

2

Methods of dust collection

The methods utilized for dust collection are many.

Sketch on blackboard

One type of dust collector is the dry inertial type. It is best suited for medium or coarse particles. Its big advantage is that the dust is recovered in a form that can be blended back into the process.

Such collectors as the gravity settling chamber, louver type collector, impingement, cyclones, and multiclone collectors fall into this classification.

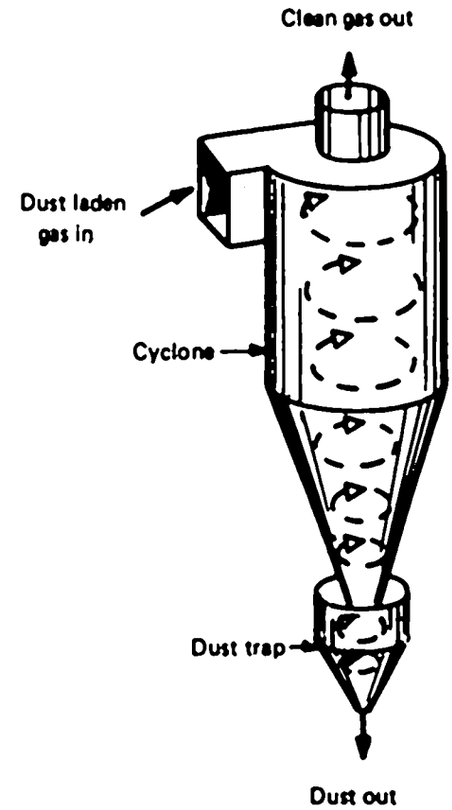

3

Another type would be the wet scrubbers. They not only wash the gas stream, but cool it as well.

Sketch on blackboard

Dust is recovered as a slurry that requires further processing to obtain a product or to dispose of as waste.

Some of the dust collectors or scrubbers of this type would be the centrifugal, impingement, packed-bed, jet and venturi.

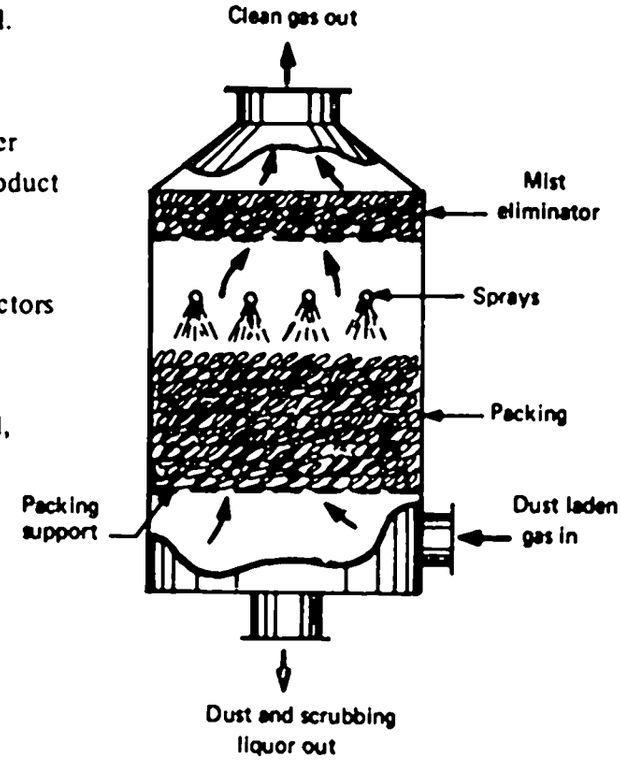

4

Fabric filters are used when the dust particles are very small. They have a high efficiency, but the temperature is limited to what the fabric can stand.

One advantage is that the product is collected in a usuable condition.

Sketch on blackboard

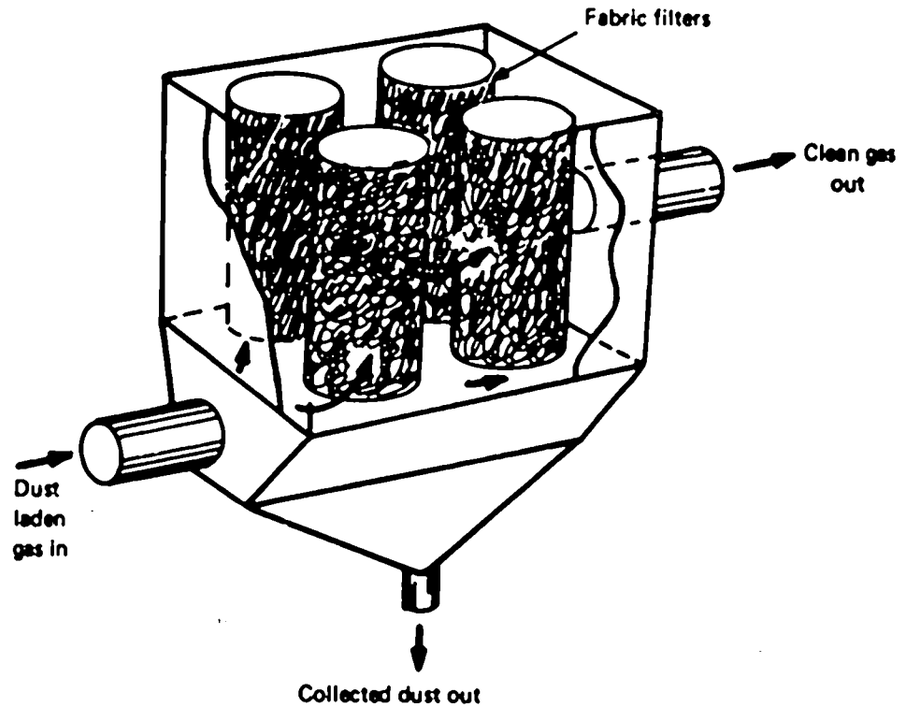

5

Another type of dust collector is the electrostatic precipitators. They also permit dry collection and are very efficient on small particles.

High installation and maintenance costs tend to restrict their use.

Sketch on blackboard

The gas between a high-voltage electrode (in this case, the wire) and a grounded electrode (the steel plate) is ionized.

Explain

Dust particles entering this area are charged and migrate to the grounded steel plates.

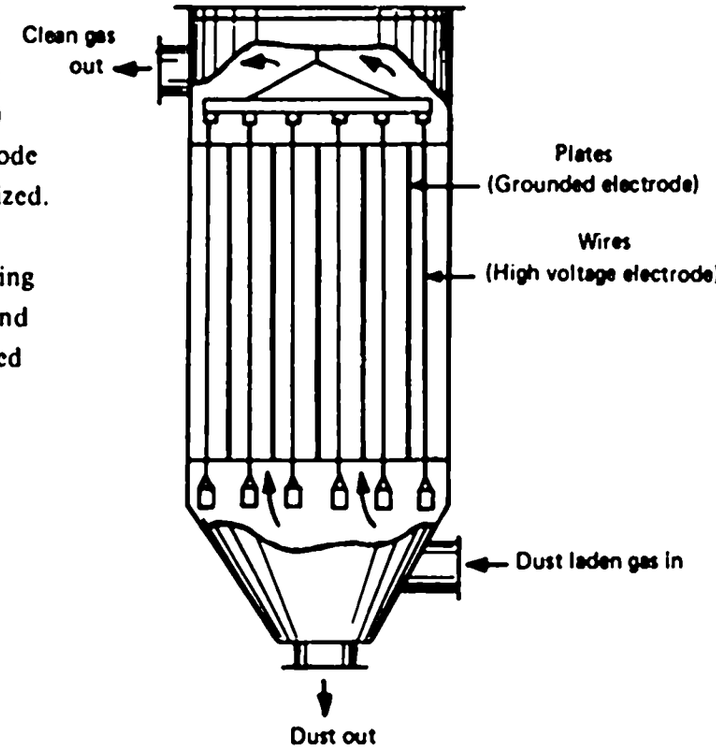

6

Operation

Dust collectors, in order to function properly, require attention. As soon as possible after the operator starts his shift, he should check the equipment that is under his care. The dust collecting system should be part of this check.

Thereafter, he should make rounds in his area at least once an hour to see that the dust collecting systems continue to function properly. He should make sure that the dust collection system is keeping the equipment free of dust.

Specific items to check are temperatures and suction pressure at different places in the dust collection system. This will tell him if the dust collector is operating properly of if trouble is developing.

During each inspection round, he should investigate anything that appears abnormal. In this way, he may be able to stop trouble before it develops.

Stoppage in the dust discharge outlet of the system will cause a dust loss. The dust hopper, star valve, flap gates, rubber tube, or whatever device is used to discharge dust from the system should be checked to see that it is operating properly.

The failure of the dust collecting system to remove the dust should be looked into right away. Such a failure can usually be seen as dust in the stack or discharge of the system. It may mean excess air leaking into the system, stoppage, or failure to discharge the dust collected.

Straightening vanes in the duct work sometime act as unwanted collecting points for dust.

Dust discharge pipes that have a water seal or a water removal (slurry or solution) system sometime cake and plug.

Rod out ports or openings at trouble spots are desirable and should be provided.

The scrubbing liquor on wet type scrubbers should have enough fresh liquor added to prevent the sprays from plugging.

The centrifugal fan type dust collectors must be checked for dust buildup on the rotating element that would cause it to become unbalanced.

The discharge gas from the bag filters should be checked several times during the shift. Check for a torn bag if discharge gas should become dusty.

If pressure drop across bag filter increases much, check for fabric voids becomming plugged due to moisture or filters not emptying the collected dust properly.

Successful operation of the electrical precipitator type dust collector depends on two things:

Explain

1. Ionization of the gas. (Dust particles are charged by the gas ions and migrate to the grounded collecting electrode.)

2. Particle collection. This is the more difficult problem in precipator operation.

If the dust builds up in the bottom of the precipator until it comes into contact with the high-voltage electrode (wire and wire weights and weight frame), it will cause an electrical ground and the system will kick off. The dust will have to be removed before the precipitator can be brought back on the line.

If one of the wires breaks, it will come into contact with the grounded plates or tubes and also upset the operation of the precipitator.

A short across the electrical insulators on the precipitator will also cause a shutdown until they can be cleaned.

7

Preventive maintenance

Dust collecting systems must be tight. That is, openings must be kept closed or the velocity through the system will not be sufficient to carry the dust.

In some collectors, such as the cyclone, sufficient velocity is necessary in order to separate the dust from the gas stream.

Sprays must be kept clean in those that have scrubbing sprays.

In the pack-bed scrubbers, the bed must be kept free of solids buildup to prevent stoppage of the gas flow or channeling.

Scrubbers that have rotating elements, such as fans, must be kept free of solids buildup on the blades. Otherwise, the rotating element becomes unbalanced with possible damage to the equipment.

The collected solids in electrostatic precipitators must not be allowed to accumulate until they come into contact with the high voltage wire weights and frame. If necessary, shut the unit down in order to remove the solids.

Broken high-voltage precipitator wires must be replaced.

It is a good idea to periodically clean the electrical insulators so as to avoid arcing across them.

8

Lubrication

Lubrication of dust collectors auxiliary equipment will be covered in a later chapter.

9

Safety

Care must be used when welding on dust collecting equipment so as not to have a dust explosion. Equipment must be clean and well ventilated before welding repairs.

Some dusts containing ammonium nitrate or other chemicals will burn when heated. Furthermore, the fire will spread through the system where there is dust present to support it.

Stress this

Due to the high-voltage involved, care must be taken to see that the current is off and everything grounded before starting work on electrical precipitators.

The electrical supply to the precipitator should be made inoperable and hold tags applied before work is started.

In some cases it may be necessary for the worker to wear protective clothing, depending on the nature of the material that is being collected.

If necessary, suitable blanks should be installed to isolate the scrubber from connecting equipment while work is being done inside.

10

Show slide

The first slide shows a gravity settling type of dust collector.

Question

How does it collect dust? (It is a chamber in which gas velocity is reduced to enable dust to settle out.)

Show slide

The second slide shows a cyclone type of collector.

Question

Explain how the cyclone separator works. (The gas enters the cyclone tangentially and spirals around the wall. Dust particles, which have a greater applied centrifugal force than the gas molecules, accumulate at the wall and work their way to the bottom of the cyclone, where they are discharged.)

Show slide

The next slide shows a mechanical centrifugal dust collector.

Question

What advantage does it have over the cyclone type collector? (It is more compact.)

Show slide

A packed-bed scrubber is shown in the next slide.

Question Does this type of scrubber usually have a mist eliminator? (Yes.)

Show slide A bag filter is shown in this slide.

Question Can you operate this filter on high temperature gases? (No. Temperature is limited by the fabric.)

Show slide The last slide shows an electrostatic precipitator.

Question What is its main advantage? (It is highly efficient on small particles.)

Question What is a micron? (It is a unit of particle size defined as 1/1000 mm or 1/25,000 inch.)

WHAT TO DO	WHAT TO SAY

1

Introduction

For thousands of years man has been concerned about the fairness of trade dealings. Weighing has been the most important means of achieving this end. This is why almost all countries have an enforcement system in respect to weights and measures.

The earliest known weighing machine was in Egypt 7000 years ago.

The need for accurate weighing in a fertilizer plant can be seen from the fact that any given raw material will be weighed on an average of five times between entering the plant as a raw material and leaving as a finished product.

Usually, when a piece of equipment in the plant goes bad, it will stop production.

Why weighing is important

A poorly maintained scale is different. It will simply go ahead turning out bad weight determinations, which can lead to a host of evils.

This can result in inferior or overly expensive end products in batching or blending (putting in too much of one ingredient and not enough of another).

It can foul up internal accounting and inventories as well as overfilling or underfilling product containers.

It can give away the company's money or bring to the company bad publicity and loss of the customary goodwill with short weights or bad products.

We can see that the success of most chemical plants depend on how accurate the various raw materials are weighed that go to make the finished product. The fertilizer plant is no exception.

2

Components of a scale

A scale is an instrument for measuring and balancing forces. Its essential components are:

1. A means by which the load can be detached and supported during weighing. This could be a platform, platter, hook, or other convenient means for supporting the load.

2. A means for transmitting the load force to the counterbalancing force. This usually takes the form of a lever system which reduces the load force to a value where it can be counterbalanced.

3. A means for producing a known counterbalancing force sufficient to balance the load and to indicate that balance.

Write the two forces on blackboard

It is clear that in a scale there are two principal forces acting: (1) The load, and (2) the power or counterbalancing force.

3

Types of weighing equipment

In the fertilizer plant weighing equipment may be divided into three groups. The first group would be that which weighs the incoming raw material. These may be motor truck scales, railroad scales, or conveyor scales.

4

Operation

Truck and railroad scales come in different sizes and shapes.

Truck and railroad scales

This type of scale quite often suffers from neglect and abuse. They should be checked periodically for obstructing materials beneath the platform, and cleaned and balanced.

Do not lubricate scales unless specified by the manufacturer. When used, the grease serves more as a protection against corrosion than as a lubricant.

When using truck scales, it is more accurate to weigh the entire truck at one weighing than to use a sum of axle weights.

Inspect scales and scale pits weekly to see that the pits are dry and no spilled material is interfering with the operation of the scale.

Once each month check the scale accuracy and every six months the scales should be tested with accurate test weights.

5

Conveyor scales

Some plants receive their raw material in bulk form. Quite often conveyor scales are used to record the amount.

A section of the belt conveyor is a scale which weighs the material passing over it. A totalizer mechanism keeps track of the amount.

The totalizer is driven by a drum that is rotated by the belt. Thus, the rate of the totalizer operation is directly proportional to the belt speed.

Sketch on blackboard

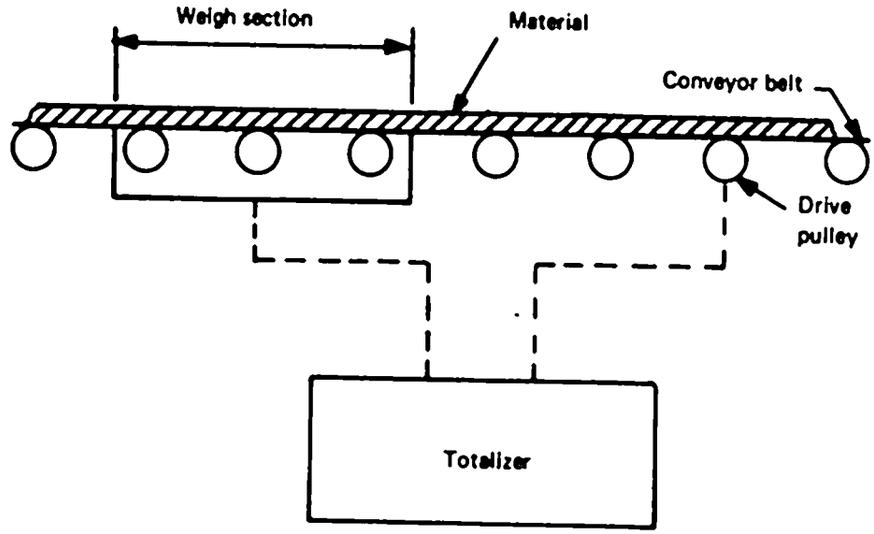

The section of the belt conveyor that does the weighing must be kept clean. Material buildup on the conveyor belt or the totalizer drive pulley will also cause an error.

Check weighing of the conveyor belt scale should be done often to assure its accuracy.

6

Process weighing would be the second type of weighing operation in the fertilizer plant.

Platform scales

The first scale we will consider in this group is the platform scale. In this type of scale, the force or weight being measured is counterbalanced by another force or weight.

Sketch on blackboard

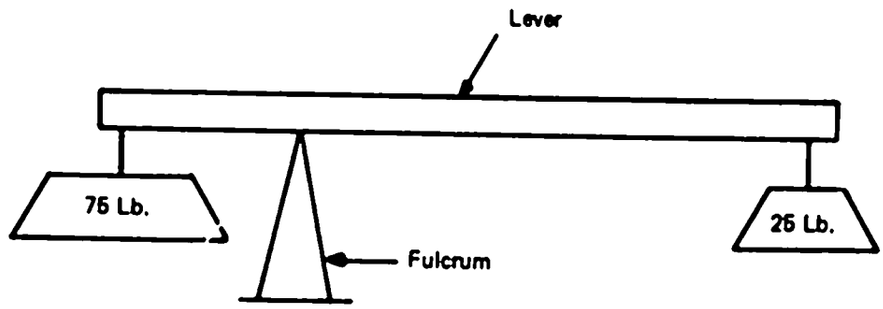

Before using the platform scale, see that it is clean, level, and adjusted for zero. Then test with check weights to see that it is accurate.

For protection of the scale, keep the weight lever locked except when you are actually weighing.

7

Weigh feeders

Continuous weigh feeders are used to feed a given raw material to a production unit. Several of these may be used for continuous proportioning of a number of raw materials to process.

The feeders consist of a short conveyor belt running over idler rollers, one roller being a scale which is balanced by the load of material on the belt.

If the load is greater or less than the required amount, the scale rises or falls, which in turn operates a motor to open or close the feed gate.

Sketch on blackboard

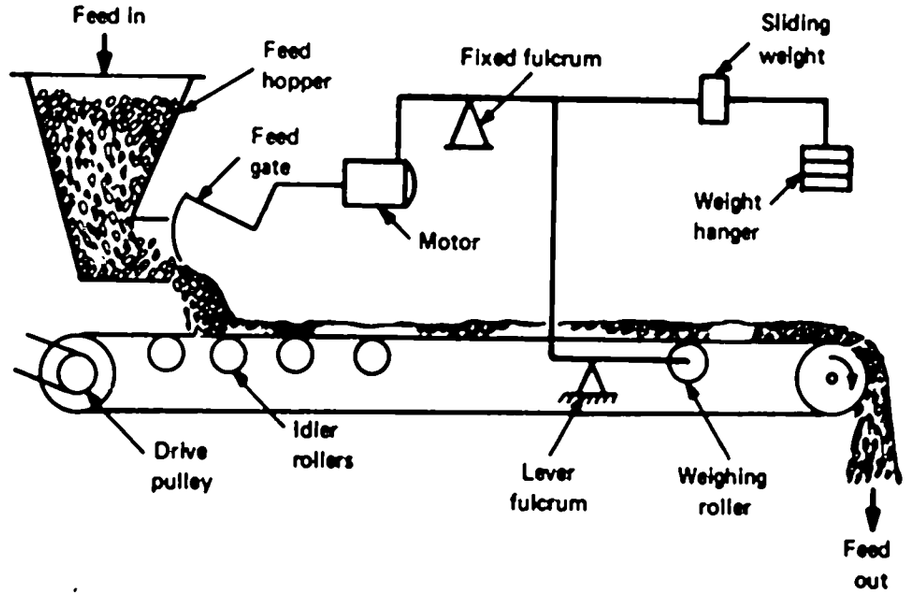

The weigh feeder should be tested at least once each day by diverting the feed to a test scale and weighing the material diverted.

The feeder must be kept clean, particularly the weigh section in order to avoid errors.

8

Some plants have manually operated batch weighing equipment. In this system, material is fed to a weigh hopper.

One or two raw materials may be weighed per batch in each machine, or one large scale for weighing all raw materials in succession may be used. After weighing, the material is discharged to process and another batch is weighed.

The accuracy of the weighing depends on the skill of the operator, and keeping the equipment cleaned and in good condition.

The weight scale should be checked at least once each shift with test weights.

9

Automatic batch weighing equipment does not require an operator. It consists of:

1. A storage space for the material to be weighed and means of feeding this material to the scale.
2. A device to start the feed to the scale hopper and to stop it when the capacity of the hopper is reached.
3. Means for discharge of the material from the scale hopper.
4. A counter or recording device to keep track of the amount.

Sketch on blackboard

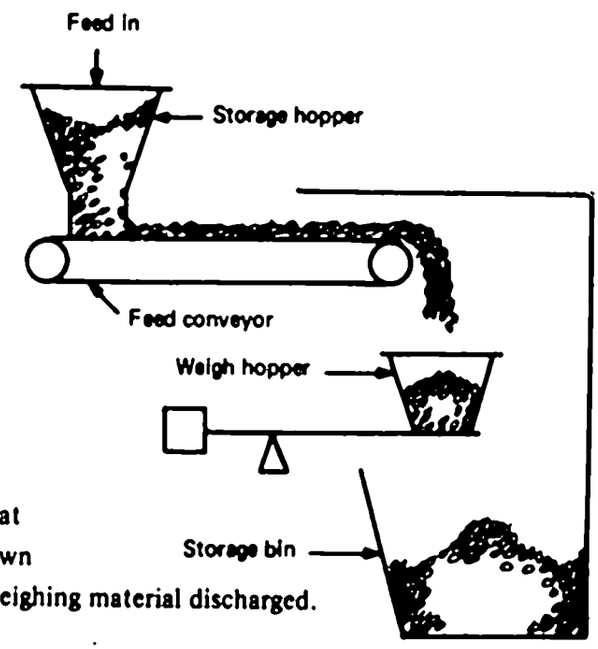

The accuracy of each weigher should be checked at least daily by feeding a known amount of material or by weighing material discharged.

The machine must be kept clean and in good operating order.

Disadvantages of the automatic batch weigher are its high cost and the fact that each raw material must be weighed on a separate machine.

10

Another type of conveyor belt scale that is becoming more popular is the nuclear meter. This type of scale depends on the fact that gamma radiation is absorbed as it passes through various materials.

The source of the gamma radiation is placed under the belt and the measuring cell above the load on the belt. A measuring cell converts radioactive energy directly into electrical energy.

Sketch on blackboard

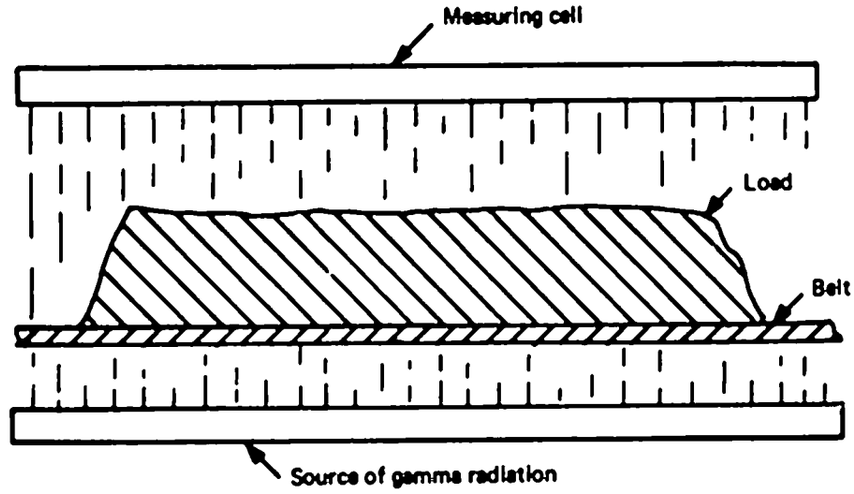

Indicating or recording instruments can be installed to give the weight of the material.

Emphasize

The advantage of this type of scale is that there are no moving parts. The disadvantage of this scale is that it is difficult to calibrate for the different materials.

11

Before the product leaves the fertilizer plant it must be weighed. This is the third weighing in the fertilizer plant.

Since we have already covered truck and track scales for bulk loads, we will review the weighing for automatic or semi-automatic bag packaging.

One type of semiautomatic bag weighing scale is where the bag is attached by clamps to one end of the scale lever.

When the weight of fertilizer in the bag balances the weights set on the scale lever, it will rise and will be indicated on a pointer.

Sketch on blackboard

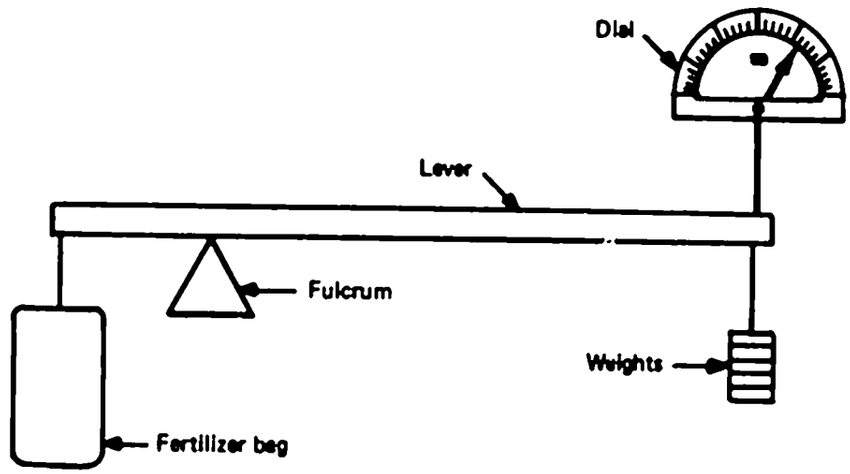

12

The automatic bag weighing scale works on the principle of a continuous flow of fertilizer to the weighing pan or bucket.

The weighing pan or bucket is suspended from the scale on knife points. When the weight of fertilizer in the pan balances the weight set on the scale, the bucket dumps, and the cycle is repeated.

The principle of rapid feed of the bulk of the load to the weigh-pan followed by a trickle feed to complete the weighing is well established in automatic weighing.

Factors influencing weights obtained with the automatic weigher are:

Stress this

1. Bulk density of material being bagged.
2. Accumulation of dust on knife edges, bearings, and other scale parts.

Sketch on blackboard

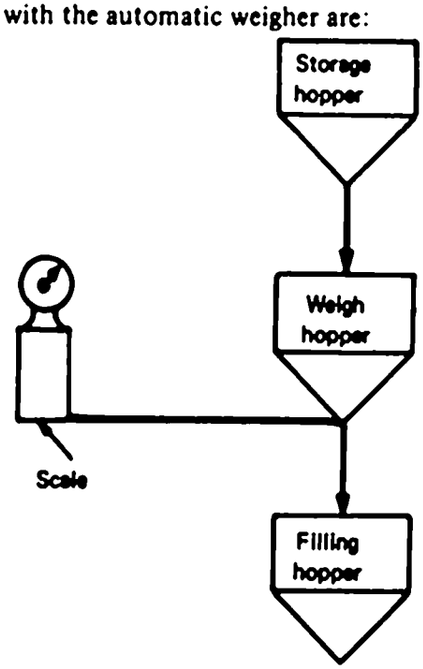

Feed to the weigh hopper may be by gravity or governed feed flow.

The scale can be operated automatically on a pace-setting basis, or it can be operated manually, calling for the charges as needed.

Such machines can weigh accurately 10 to 15 50-pound charges, or 8 to 10 100-pound charges per minute.

13

Emphasize importance

At the start of the shift, the operator should check weigh the first 2 or 3 weighings to make sure the scale is weighing correctly.

Every 30 to 40 minutes during the shift, he should check weigh a bag or two to make sure the scale is functioning properly.

Clean the scales at the end of each shift.

14

Preventive maintenance

Neglect, dirt, and indifference combine to make scales inaccurate.

There is little or no wear on a scale at any point including the pivot and bearing sections.

Most trouble comes from obstructing materials gathering beneath the platform and preventing proper balance.

Keep scales clean, particularly at pivots, and bearing parts and underneath the platforms.

Important

Occasionally, at least once a month, if the scale is subject to a lot of use, have the repairman check the scale for worn and defective parts.

Check for any product buildup on parts that would cause inaccurate weights.

The nuclear type scale should have a preventive maintenance check for every 1000 hours of operation.

The amplifier should be visually inspected for loose and broken connections, damaged insulation on cables and wires, overheated

components, and for corroded contacts and connectors. The remedy is apparent for most troubles located visually.

When heat has caused damage, the trouble must be located and steps taken to remove and replace faulty components in order to prevent further damage.

After the visual inspection has been performed, an operational check should be made to see that all controls are serviceable and working properly.

15

Lubrication

Unless called for by the manufacturer, avoid greasing or oiling scale pivots and bearings. This tends to cause inaccurate weighings since spilled fertilizer or dust will stick to the oil.

Grease ball bearings every week and other points every day as conditions require. Do not overgrease.

16

Safety

Do not try to inspect or adjust belt scales while the conveyor is in operation.

When using the nuclear scale, remember that radioactive energy is harmful to the human body if it is absorbed at an excessive rate. In the United States, the U. S. Atomic Energy Commission, issues a license to users and manufacturers of radioactive materials. Specified safety rules must be obeyed or the license will be withdrawn.

In most installations of this type, the radioactive source is contained in a lead-filled holder.

Stress this

Long experience with hundreds of gages, where the source is contained in a source holder, indicates that the dose received by operators, maintenance personnel, and supervisors is less than the average necessary to provide personnel with monitors, such as a film badge or a dosimeter. However, no one should expose any part of his body between the source and the measuring cell for more than a few minutes. If such exposure is necessary, technicians can rotate shields in the meter to make such exposure safe.

Show slide — The first slide shows a track scale.

Question — Is it possible to weigh railroad cars on a track scale without stopping the car? (Yes.)

Show slide — The second slide shows a conveyor belt scale.

Question — How does it work. (The load on the conveyor belt is weighed as it passes over a scale section of the conveyor.)

Show slide — The next slide shows a weigh feeder.

Question — What is its main use? (For proportioning materials used in manufacturing plants.)

Question — Why should you keep the scale clean? (Material on the scale or against the moving parts will make the scale inaccurate.)

Question — Why is it necessary to weigh the materials accurately during the manufacturing process? (Better yields can be obtained and the cost held down only if the correct amounts of the materials are used.)

WHAT TO DO	WHAT TO SAY

1

Introduction

The use of mechanical equipment instead of men for the movement of packaged or bulk materials is effective and usually economical. Packaged materials may be handled most effectively with forklifts while front-end loaders are used in the handling of bulk materials.

2

Forklifts

Packaged materials received from vendors are often palletized and unitized. For in-plant movement or storage, packages may be merely stacked on pallets.

Palleted materials are handled with forklifts which have parallel forks that enter the pallets, a lift mechanism to elevate the load and a truck which allows movement.

Sketch on blackboard

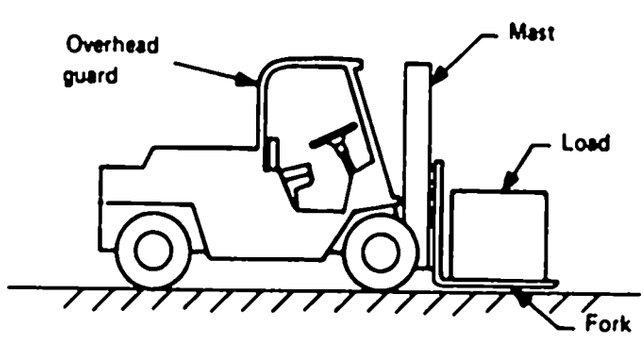

FORKLIFT

Lift capacity

Forklifts may be obtained in many sizes depending on the job for which they are to be used. Common sizes have lifting capacities of 1,000-10,000 pounds. The lifting capacity of the lifts is usually referred to by their lifting capacity in pounds at a 24-inch load center. The truck can lift and balance only that weight which is counterbalanced by the weight of the truck behind the front wheels. Under full loads about 90-95% of the total weight is on the front wheels. To increase the load carrying capacity of the forklifts counter weights are added to the rear of the truck. Under some circumstances more than the rated load can be lifted, provided the load is close to the mast.

Steering

Since forklifts are steered by the rear wheels, manuevering the vehicle is sometimes quite difficult for new operators. With most of the weight distributed on the front wheels when loaded, steering can be a problem when slowing down and simultaneously making a turn. When slowing down rapidly, the rear wheels have a tendency to raise off the floor; a complete loss of steering may result from rapid stops.

Small forklifts generally have manual steering while larger trucks may have power steering. It is advantegeous to use power steering on small trucks where considerable manuevering is required.

Tires

Forklifts may have cushion tires (non-inflatable) or pneumatic. Cushion-tired trucks are lighter, smaller, cost less, and are more manueverable than comparable pneumatic-tired models.

Cushion tires are the least expensive and are used where trucks operate exclusively over hard floors, where sharp objects would cut pneumatic tires, or where aisle space is limited.

3

Pneumatic tires should be used for application involving towing or where a high degree of traction is required, such as outdoor ramps.

Dual wheels may be used on the front axle of the pneumatic tired vehicles. Dual wheels are excellent for traveling over soft ground. Dual wheels tend to carry mud and rock between the tires which can be a problem when the vehicle operates from an unpaved yard into a building.

4

Masts

The masts are avilable in a wide range of retracted heights, amount of lift, and "free lift". "Free lift" is the height above ground to which the fork can move before the fully retracted mast starts to increase in height. This can be important when stacking materials close to the ceiling in low roof buildings.

Masts have tilt angles of about 6 degrees forward and 12 degrees backward. Once the load has been picked up by the forks the mast can be tilted backward to stabilize the load and prevent spillage in transit.

5

Forks

Manual sideways adjustment of the forks is standard. The forks are adjusted to fit and stabilize the load being carried.

6

Controls

Controls should be directional; that is, when a lever is moved forward, the controlled mechanism should go forward. Very few forklifts have fully directional controls. On some vehicles, the driver is confused by the identical levers side by side, one for tilting the mast, the other for raising or lowering the forks.

7

Overhead guards

Forklifts should be provided with overhead guards if the loads lifted are high enough to fall back on the operator. These guards protect the operator from falling objects and prevent backing into overhanging objects and pinning the driver against the steering wheel. In cases where the vehicle backs off a platform, the guards provide protection if designed right. Where desirable, seat belts may be utilized to prevent an operator from falling from the forklift and being pinned under it.

8

Pallets

Pallets used with forklifts may be of wood, metal, paper or other materials. Most commonly used are the two-way entry wooden pallets. The two-way entry pallets may be entered by the forks from either end. Four-way entry pallets may be entered from any of four directions.

Sketch on blackboard

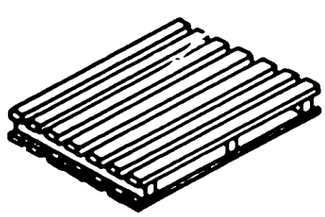

DOUBLE DECK PALLET

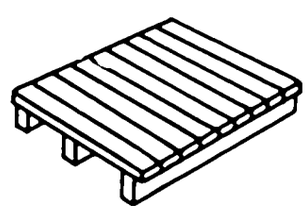

SINGLE DECK PALLET

9

Loading pallets

When stacking material on a pallet, the material should be stacked to give the most stable load. If possible each layer should be stacked to lock the previous layer into position.

Sketch on blackboard

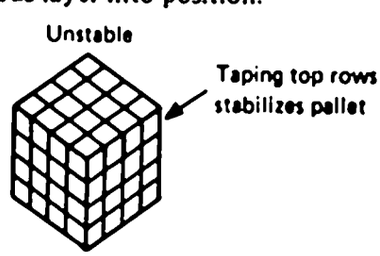

ONE BOX STACKED ON TOP OF ANOTHER

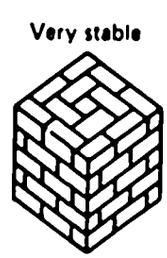

LOCK STACKING PATTERN

With an unstable load, the driver may take several times as long to move a pallet than if the material had been stacked right on the pallet.

Operation of forklifts on grades over 10% should be avoided due to stability problems, particularly if loads are lifted or lowered while on grade. Normally, the maximum grade for trucks is about 25%.

10

Fuels

Gasoline is the most commonly used lift-truck fuel. Gasoline is a dirty fuel and requires an excellent ventilation system if the truck is operated inside a building for any length of time.

Propane is a much cleaner fuel and causes much less pollution of the atmosphere. Engines adapted for propane are more costly.

Diesel engines are handicapped by dirty exhaust, a higher noise level and non-availability in small sizes.

Electric forklifts are available where internal combustion engines may not be permitted.

11

Attachments

Many attachments are available to increase the usage of the forklift. Some of the attachments are shown below:

Sketch on blackboard

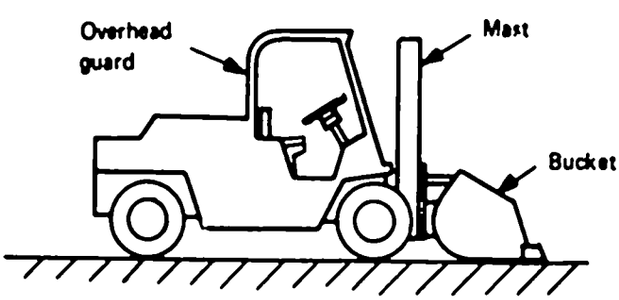

HYDRAULIC SHOVEL

The addition of a loader bucket turns a fork truck into a bulk loader. The bucket mounts on the fork bars and can be quickly interchanged with standard forks. The bucket can be dumped at any height, at any rate of dumping for measurement or weighing.

Sketch on blackboard

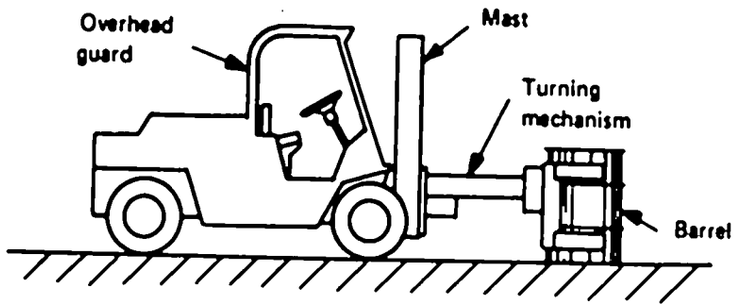

BARREL UPENDER

Barrels of liquids or any flowable materials can be poured from barrels or drums. This mechanism allows the drums to be turned completely upside down.

Sketch on blackboard

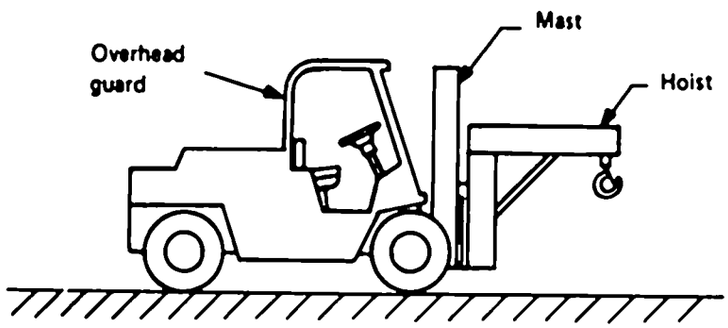

CRANE

Cranes handle bundles of large bulky items, such as conduit, pipe, steel fabricated sections. Material can be removed from trailers and gondola cars. Crane-equipped lift trucks can serve as a general purpose maintenance vehicle.

A lifted pallet can be used as a work platform.

12

Maintenance

The following are some danger signs which, if corrected, can save costly repairs and downtime:

Decrease in normal speed
Lack of power
Apparent lack of lubrication at any point
Worn or damaged tires
Missing parts
Worn chains, rods and other mechanical linkages
Hydraulic oil leakage from cylinders, lines and fittings
Difficult steering
Overheating of motors and controls
Erratic operation of controls

The crankcase oil level and the hydraulic oil level should be checked frequently. Where the operator lubricates the equipment, a regular schedule should be followed.

13

Safety

Most forklifts are designed so that gasoline cannot be spilled on a hot exhaust or manifold when refueling. If the equipment is not so designed, extreme care should be exercised when refueling.

Compared with other mobile equipment, forklifts provide the least visibility for the driver. A truck with a standard mast will give much better visibility than a triplex mast with high free lift. Other factors affecting visibility are the height of the forks above ground, whether the forklift has a load back-rest and the design of the overhead guard.

To reduce inside atmospheric pollution, a special catalytic muffler can be installed on gas, propane, or diesel engines. With this muffler, a virtually clean exhaust will result, enabling an engine-driven truck to be used in buildings that would otherwise require an electric truck.

To prevent injuries from forks, the forks should be lowered to the floor when not in use.

When lifting pallets with the forks, care should be exercised to avoid ramming the mast into overhead or wall-mounted lights.

14

Questions

Under full load condition, which set of wheels carry about 90% of the load? (Front wheels)

With a full load being carried, what can happen to the steering when slowing the vehicle down? (If the vehicle is slowed too rapidly the rear wheels will raise completely off the floor resulting in complete loss of steering.)

For hauling extra heavy loads, where should the load be concentrated? (As close to the mast as possible)

How can a load be stabilized? (By correct stacking of material on the pallet; when traveling the mast may be tilted back to allow the load to be against the back rest)

Why should a gasoline-powered forklift not be operated in a closed building? (Exhaust fumes can cause death)

Why lower the forks to the floor when not in use? (To prevent injuries)

15

Front-end loaders

Bulk materials are handled by front-end loaders in many cases where permanent handling equipment is not feasible, as for example, box car loading. The front-end loader has a bucket that can be tilted to scoop up a load, an elevating mechanism to allow the load to be lifted and dumped and a truck which allows movement.

Sketch on blackboard

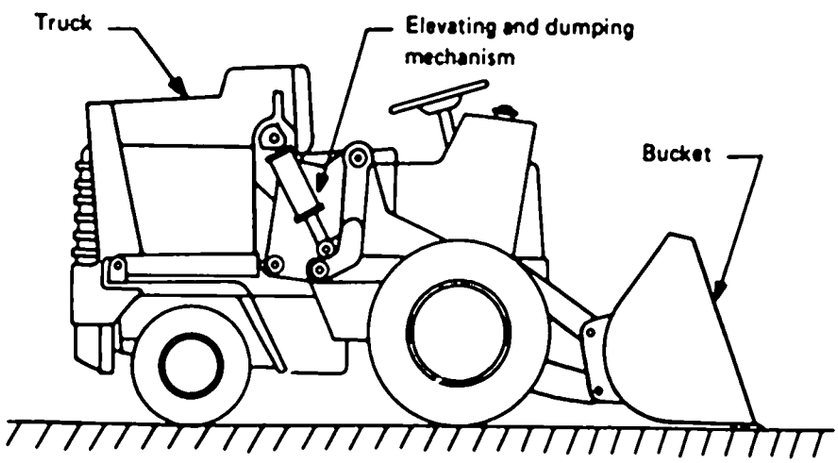

FRONT-END LOADER

16

Operation

The size of the loader will of course be determined by the job it is to perform. One large loader can out produce two or more smaller loaders of equal capacity, especially in loading and carrying operations, where small loaders must be used in quantity and are subject to traffic congestion.

Plant layout may be a production limiting factor. The placement of rail lines, posts and columns, power lines and fixtures, location of stock piles and hoppers exert a great influence on the manueverability of a loader.

Much time can be wasted due to mismatch of equipment. A narrow hopper and a large bucket can cause excessive cycle time because precise positioning is necessary to prevent spillage.

Where necessary to match the equipment with the job, side dumping buckets can be used for dumping material into narrow pans.

Other uses

To obtain maximum usage of the front-end loader, one of sufficient size may be used for loading, road construction, pulling railcars and light dozing operations. Special attachments include forks, winches, and sidebooms.

Many of the newer loaders have been designed to eliminate some of the hazards of older type loaders. The hoisting and dumping mechanisms have been relocated to avoid some of the pinch points.

Riders should not be permitted as they may get caught in the pinch points or steering mechanism.

When loading trucks the loader operator should have an agreement with the truck driver to stay in the cab of the truck. This can avoid an accident from spilling material on the truck driver.

Undercutting piles

When removing bulk material from the bottom edge of a high pile, extreme care should be exercised. The top of the pile could cave in, burying the loader and operator.

Bucket position

When traveling, the bucket should not be left in a high position; this causes instability and there is a possibility of turning the vehicle over.

Where it is necessary to descend grades, the vehicle speed should be lowered, the engine engaged and the transmission in low range. The bucket should be carried low and tilted back to minimize bouncing.

To further stabilize the vehicle, it may be desirable to add ballast to the tires.

Side or rear view mirrors aid in backing.

17

Maintenance

Most of the danger signs mentioned for forklifts also apply to front-end loaders, i.e., poor brakes, missing parts, hydraulic oil leakage, etc.

The hydraulic oil and crankcase oil levels should be maintained. The vehicle should be adequately greased.

18

Safety

The loader should be provided with an overhead guard to stop falling objects and to prevent injuries to the operator from backing under overhanging objects.

Safety belts and hard hats also will help prevent injuries to the operator.

Safety glasses can prevent accidents where operators may get foreign matter in their eyes while operating the loader.

Never permit anyone to stand under a bucket. Hydraulic failures can cause the bucket to fall.

When the equipment is idle, the bucket should be lowered to the ground.

When operating a loader in an explosive atmosphere a special muffler, wiring and enclosed fuses and circuit breakers can be used.

The maximum safety is obtained when operators are not permitted to back loaders toward a drop-off.

Adequate ventilation must be provided when operating in a closed building.

19

Questions

Why should the bucket be kept in a low position when traveling? (To add stability and keep the vehicle from turning over)

What jobs other than loading can the loader perform? (Sideboom attachments can be obtained and the vehicle can move railroad cars.)

Why should riders not be permitted? (They can easily be caught in the pinch points and be injured.)

Why is ballast sometimes added to the loader tires? (To provide additional stability)

Why should safety glasses or goggles be worn by the driver? (To keep foreign materials from the operator's eyes)

20

Slides

Forklift with overhead guard in operation.

Front-end loader in operation.

WHAT TO DO	WHAT TO SAY

1

Introduction

The sampling and analysis of materials purchased by or made in our fertilizer plant play a very important part in its operation.

Most of these materials are bought or sold on the basis of their "grade"; that is, how much plant food they contain. Sampling and analysis are necessary to determine this. It affects the money that we take in or pay out and therefore *your paycheck*.

Analyses are also required to control the many chemical reactions involved in making modern fertilizers.

Many factors must be considered in determining exactly how a sample should be taken in order to be sure of getting the correct analyses. The engineers who designed the plant have provided the proper equipment to take adequate samples.

Your supervisors will instruct you on exactly what samples to take, when to take them, and how to take them.

What we want to do here is give you a basic understanding of the importance and purpose of sampling, and of the principles of correct sampling in a fertilizer plant. With this knowledge you will perform your job better.

2

Purpose of sampling

To be sure you and I understand words the same way let's define the term "to sample."

Write on blackboard

To sample a batch of material (such as a carload of fertilizer or a tankfull of liquid) means to remove a small part of the material in such a manner that the part removed (the sample) will have the same characteristics, such as particle size distribution and chemical composition, as the whole lot. Such a sample is said to be "representative" of the lot.

Let's repeat that. (Repeat above)

Why do we need samples? Suppose we have bought a 100-ton carload of 93% sulfuric acid at $50/ton of H_2SO_4. We would expect to get and pay for 100 x 93% = 93 tons H_2SO_4. But when we sample this acid and analyzed the sample, it only contained 90% H_2SO_4. So we received only 90 tons of H_2SO_4 instead of 93 and would therefore only pay for 90 tons and thus save $150.

Of equal importance is the fact that the analysis of the sample showed us this acid was weaker than usual and that we would have to use more of it in order to make fertilizer of the proper grade.

Likewise, it is very important to know the exact grade or analysis of the fertilizer we produce and sell; sampling and analysis is the only way of getting this information.

If the fertilizer contains more nutrients (N or P_2O_5) than our price allows for, the company may lose money; if it contains less nutrients that we say it does on the label, the customer loses money and will no longer buy our fertilizer. The state may also assess penalties on us.

The purpose of sampling is to obtain a small amount which is representative of the lot so that it can be analyzed.

In the laboratory the initial sample you take (let's say 100 lbs. from a carload) will be very carefully mixed, crushed, and gradually reduced in volume by standardized procedures until it is half a cupful (which is still representative of the whole carload). The chemist takes a half teaspoon of this to be analyzed.

It should be emphasized that an improper or non-representative sample is worse than no sample at all as it misleads the user of the analysis.

Questions

Why do we sample and analyze materials? (To control chemical processes in the plant; to make sure we get what we pay for; to be sure the customer gets what he pays for)

What is a simple definition of a sample? (A small amount that is just like the whole lot it came from.)

Basic principles of sampling - theoretical considerations

To "take a sample" sounds pretty simple; it's the requirement that the sample be *representative of the entire lot* that requires the use of careful and proven sampling procedures. Of course, if the carload or tank full of material was *all exactly the same*, sampling it would not be a problem since *any part* you took would be representative. However, even if the material *looks* the same there are probably wide differences in particle size distribution and chemical composition in different parts of it.

You have to *assume* that wide variations exist and use a sampling procedure that will give a representative sample under *any condition*.

Instructor should have 2 1/2 gal. jars with white beans in one and black beans in the other. other. (Beans don't have to be counted but the volume of the black ones should be about 1/3 of the white ones. Other contrasting materials could be used.)

Let's illustrate the problem of sampling. I have here about 250 black beans which we will say represent the P_2O_5 in a fertilizer. Here are 750 white beans which represent the other materials in the fertilizer. Now I pour the black ones into the white jar and shake it up to mix them well. Now we know this "fertilizer" contains ¼ or 25% P_2O_5 (black beans). But you can see that they are not equally distributed throughout the mass of beans. We would say the quality of this fertilizer varies or it is *not* homogeneous. (Homogeneous means that all parts are the same.)

How would you sample this fertilizer to be sure to get a sample that represents the whole lot? This is the *fundamental problem we face in all sampling situations.*

For a sample to be representative of this lot it would have to contain 3 white beans for each black bean. Suppose we take a sample of this batch by withdrawing 100 beans, one bean at a time while blindfolded.

It would seem that with 100 beans we would have a good chance of getting 25 black and 75 white beans, a representative sample. Yet, the laws of probability or chance, which apply to such sampling, show that such a 100-bean sample would have only *1* chance in *10* of being representative. (A good discussion of the theoretical aspects of sampling as well as many illustrations of automatic samplers is given in chapter 19 of *Handbook of Mineral Dressing* by A. F. Taggart, John Wiley and Sons, 1945.)

The purpose of this illustration is to show that proper sampling is not simple. Many factors such as homogeneity of the material, particle size, value and grade of the material, and accuracy desired must be taken into consideration.

This will be done by the plant engineers or your supervisors in setting up the sampling instructions they will give you. This is why it is very important that you follow sampling instructions exactly; but if you notice a change in flow conditions that you think may affect the sampling, call it to the attention of your supervisor.

4

Basic principles of sampling - practical sampling

A sample taken to represent the sampling unit such as one carload, one shift, or perhaps a day's operation, is usually called the *gross sample*.

This gross sample is collected by removing many small amounts (about ½ lb.) from the material being sampled; these are called *sample increments*.

Most solid materials sampled in a fertilizer plant will be less than 1/8 inch in particle size. For this type of material, a gross sample of 80 to 100 lbs. is usually sufficient since many increments can be taken of such fine material.

Coarser materials would require a larger sample since each increment must be larger in order to include enough of each particle size.

Generally, the larger the number of increments that can be included in a gross sample, the better the sample will be. This means it is better to take many small (½ lb.) increments rather than a few large ones (5 lbs.).

The sample increments are usually collected from the stream of material where it is falling from the discharge of a belt conveyor or a chute.

For best results the sample increments should be taken with a sample cutter which may be held by hand or be part of an automatic or mechanical sampler. This device is used to "cut" across the stream and looks like this:

Sketch on blackboard

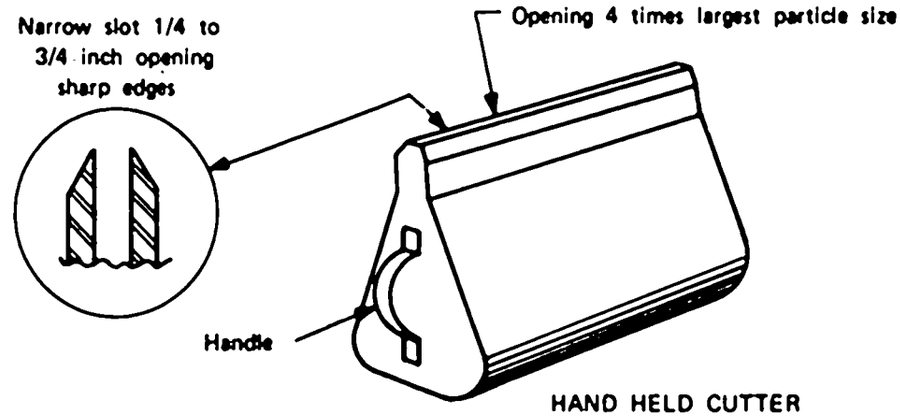

HAND HELD CUTTER

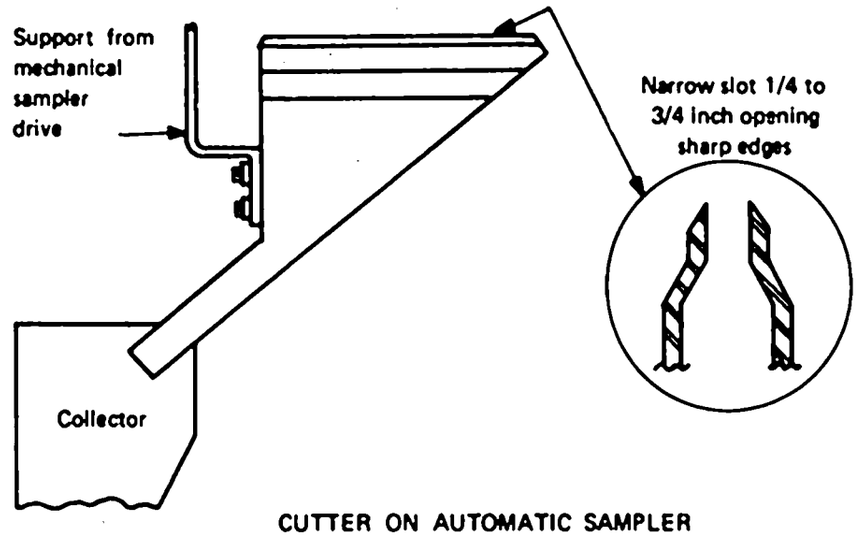

CUTTER ON AUTOMATIC SAMPLER

In use the cutter is moved *completely across* the falling stream of material at a *constant speed*. The speed and width of slot determine the amount collected for a given material flow rate; the speed is usually adjusted so as to get the size increment desired (but speed must be *constant* during the cut). The narrow slot on the cutter permits a relatively small amount to be taken for each cut and thus more increments can be taken.

The following principles must be followed with either hand or mechanical sampling to obtain an accurate sample:

1. The sampler must take the *whole stream part of the time*. (This does not mean *all* the stream *at once*. The above cutters take *all parts* of the stream but they do it ½ inch or so at a time as the cutter moves across the stream in one cut.)

2. A sample must *never* be taken by taking *part of the stream all of the time*. An example of this would be leaving a cutter at one part of the stream all the time. Due to segregation, etc. one side of a stream might be quite different from the other side.

3. The cutter must move into, across, and completely out of the stream at each cut. Covers should prevent any chance of material entering the cutter between cuts when it is at rest out of the stream.

4. The speed of the cutter must be constant so that an equal percentage is taken from all parts of the stream.

5. The cuts must be made at *regular* intervals. The number of cuts taken is one way of controlling the size of the gross sample (one cut every 2 to 5 minutes is desirable with a mechanical sampler).

6. The cutter should never be filled during the cut. Overfilling would exclude material that should be part of the sample.

7. During and after collection, all samples must be protected from contamination by other materials. Special steps may be necessary to assure accurate samples for moisture determination since the sample increments may lose or absorb moisture quite readily.

Questions

What is the basic principle of sampling moving streams of materials? (Take all of the stream part of the time. This means take a thin slice all the way across a stream.)

Why will taking part of the stream all the time give an inaccurate sample? (A given part of a stream is quite likely to be different from the rest of the stream.)

Why should the speed of the cut be constant? (So that the amount taken is proportional to the amount present at different points in the stream.)

5

Equipment and procedures Sampling of solids - mechanical or automatic samplers

Usually incoming solid raw materials such as phosphate rock and solid fertilizers produced will be sampled. Modern fertilizer plants install automatic mechanical samplers to take the required samples. A typical sampling installation looks like this:

Describe parts and how they work

Sketch on blackboard

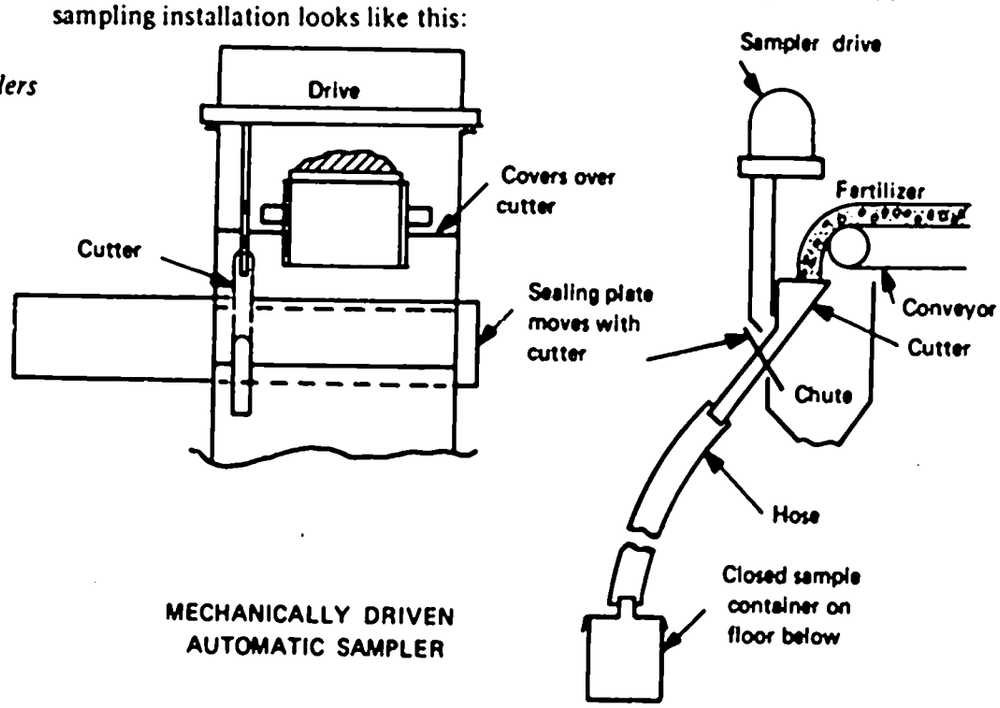

MECHANICALLY DRIVEN AUTOMATIC SAMPLER

A timer actuates the drive mechanism which moves the cutter across the stream of material. The material entering the cutter flows to a closed sample container. The timer can be set for any sampling interval desired.

Various types of drive mechanisms are used. Since they must move the cutter both forward on one cut and backward on the next cut, the mechanical arrangement is quite complicated and frequently gives considerable trouble if it gets out of adjustment. The cutter discharge pipe must pass through a slot in the side of the housing; it is difficult to prevent spillage of material out this opening.

Any scraping or binding of the discharge pipe at this point will put a severe strain on the drive because of the leverage involved. As indicated, the cutter should be under a cover when at rest to prevent dust from entering. The covers should open to permit inspection and cleaning of the cutter. For fertilizers the cutter should be made of stainless steel to prevent corrosion and adherence of material.

The sketch below shows a sampler driven by a double-acting air piston powered by compressed a

Sketch on blackboard

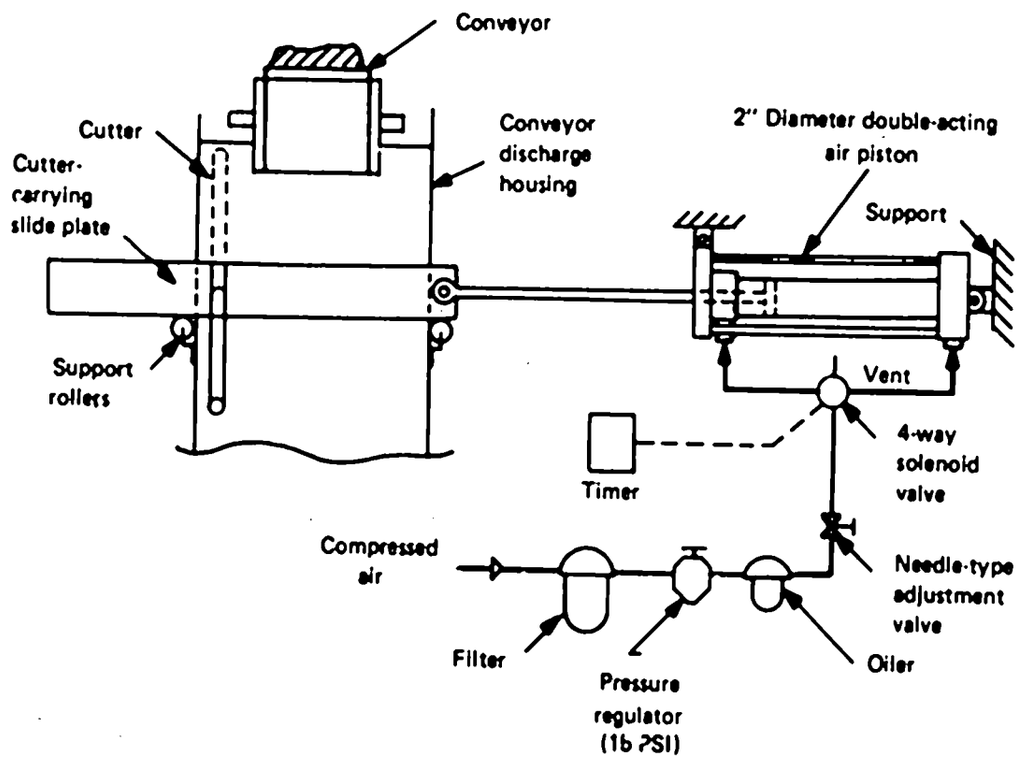

AIR–POWERED AUTOMATIC SAMPLER

Since the plate carrying the cutter is in line with the air piston, it is not as subject to binding as the previous type. The simplicity of the air cylinder makes this type of sampler nearly trouble-free.

Since the compressed air is not a positive drive (as compared to the mechanical-type drive) care must be taken to see that the cutter-carrying slide moves easily and does not bind; any binding will cause jerky movement and an inaccurate sample.

6

Operating duties

The mechanical (automatic) samplers should be inspected twice a shift. Watch it make a cut and look for any uneven motion, hanging, or rubbing of the moving parts which would indicate potential trouble.

Keep the drive mechanism covered. Keep dust and spillage brushed off.

Check the cutter slot and chute to be sure they are clean. The cutter edges must stay parallel and sharp. [One exception is a sampling device (a vezin) which rotates on an axis perpendicular to the cutter slot. On this type, the cutter edges must be radial; the slot will therefore be shaped like a piece of pie.]

Caution

Before doing any cleaning of the parts be sure the sampler *is turned off* to prevent an accident. Also be sure to turn it on again.

Grease appropriate parts according to the schedule set up. If an air-operated piston is used, be sure the oil container is filled and that it is feeding properly.

Check the sample container and see that is contains about the right quantity of sample.

Some samplers are equipped with a counter which counts the number of cuts; see if this count agrees with the number the sampler should have made since the last time you read it.

Properly operating mechanical samplers take a constant percentage of the gross material that they sample. The completed sample should be weighed when it is removed. Generally the tonnage of material from which the sample was taken will be known (for example the shift's production or daily production).

Division of the sample weight by the material tonnage will therefore give a ratio which should be nearly constant. The laboratory should check this ratio as variations in it indicate improper operation of the sampler.

Question

Name some of the advantages of automatic samplers. (They are able to take many small increments; the increments are proportional to the material flow; they are reliable; they can do a much better job than a man.)

7

Hand sampling

In the absence of automatic samplers, samples must be taken by hand. Sometimes the material can not be samples automatically.

The best point to sample is where the material discharges from a chute or belt conveyor. The hand-held sample cutter described earlier should be used to cut completely across the stream at a constant speed.

Such increments should be taken at regular intervals throughout the day or established sampling period. The size of the slot must suit the size of the material sample. It should be four times the largest particle in the material sampled.

It is frequently necessary to sample carloads of material. If at all possible, this should be done from a conveyor as the car is being unloaded.

This is the easiest and most practical way of being able to get material from *all* parts of the carload which you *must do* if the sample is to be representative.

Sometimes a carload must be sampled before it is unloaded. You must suit the method used to the material to be sampled.

You should try to obtain cores of the material from top to bottom at 6 or 8 locations evenly spaced around the car. Sometimes a posthole digger can be used to remove cores (which are the sample).

Sometimes a deep hole can be shoveled out; then a shovel is used to collect a narrow strip of material (1 inch deep by 8 inches wide) from the undisturbed vertical surface of the pile (hole). This is repeated in many holes.

Sometimes a chamshell bucket on a crane can be used to dig the holes and expose a vertical face of the material.

Special care must be taken not to *select* the material sampled; remember you should obtain representative amounts of all types of material present.

A device called a *thief* or *tube sampler* is sometimes used to take a sample from a pile or from bagged material. Two types of thief samplers are shown below:

Sketch on blackboard

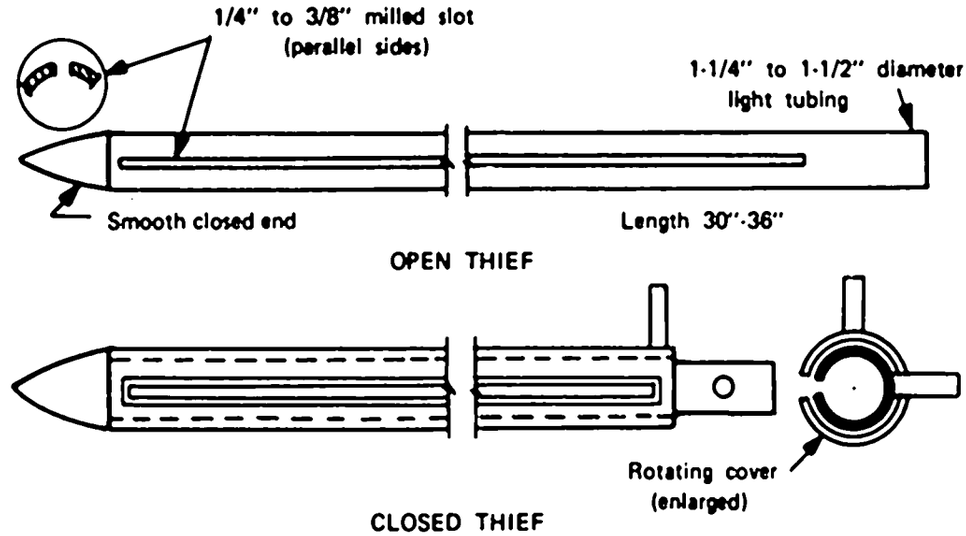

The open thief is simply a smooth tube about 1" to 1¼" in diameter and 30"-36" long; one end is closed as a smooth tapered point. A smooth uniform slot 1/4" to 3/8" in width is milled in the tube for nearly its entire length. The metal should be light and resistant to corrosion; 1" thin walled electrical conduit is suitable.

In use the thief is inserted into a horizontal bag of material the full length of the bag on a diagonal *with the slot turned down*. The thief is then turned over so the slot is on top. This permits the fertilizer to fill thy tube; a little tapping helps insure this. The thief is then withdrawn carefully and its contents poured into a jar or can through the open end.

As many increments as needed are taken from the different bags making up the lot.

The closed thief operates on the same principle except the slotted tube is surrounded by another tube which has a wider slot cut in it. This cover or shutter is turned to cover the slot before the thief is inserted with the slot in the thief on top. Then the cover is rotated to uncover the slot and thus permit the sample to enter.

This type can be used to take samples while in the vertical position whereas the open thief cannot.

8

Operating duties

Since much of the sampling may be by hand, you should understand the sampling principles involved and apply them conscientiously while carrying out your sampling duties. You should follow any instructions your supervisor gives you.

9

Sampling of liquids

The same basic principles of sampling that apply to solids also apply to liquids. Even though a liquid may appear to be homogeneous the liquid should always be mixed before sampling.

Automatic sampling

Liquids discharging from a pipeline or flowing over a weir are frequently sampled automatically. The same types of samplers described for solids are used. If the stream does not contain solids, the slot in the cutter can be narrow–about 1/8" wide.

The gross sample from the cutter should be 20-40 gallons per day and go into a container. At the end of the sample period this sample will be mixed by stirring and a gallon or so dipped out of it as the final sample.

If it contains solids, special care is necessary to be sure the solids don't segregate due to stirring or settle out to the bottom. It is best to drain the container while stirring it and take frequent cuts of the liquid (and solids) draining out.

Hand Sampling

Frequently samples are withdrawn from pipelines carrying liquids. If the liquid contains solids or the flow is slow, the solids or heavier parts of the liquid may settle and flow along the bottom of a horizontal pipe. A sample withdrawn through an outlet at the bottom of the pipe would therefore have more solids than it should.

An elbow will also cause solids to go to the outer part of the bend due to centrifugal force.

The point on the pipeline from which a sample is taken must be selected with care. If possible, flow through a sample line should be continuous so

that the liquid in it is always representative of the liquid flowing in the main pipeline. If flow is not continuous, the sample line should always be flushed out before the sample is taken.

It is frequently necessary to sample the contents of a tank or tank car. If possible, the contents should always be mixed before they are sampled. This is frequently done by putting a compressed air pipe or sparger in the tank and letting the air stir the contents.

The contents of some tanks can be mixed by recirculating a stream of the liquid to it as shown below. The recirculating flow must be great enough to give a mixing action however.

Sketch on blackboard

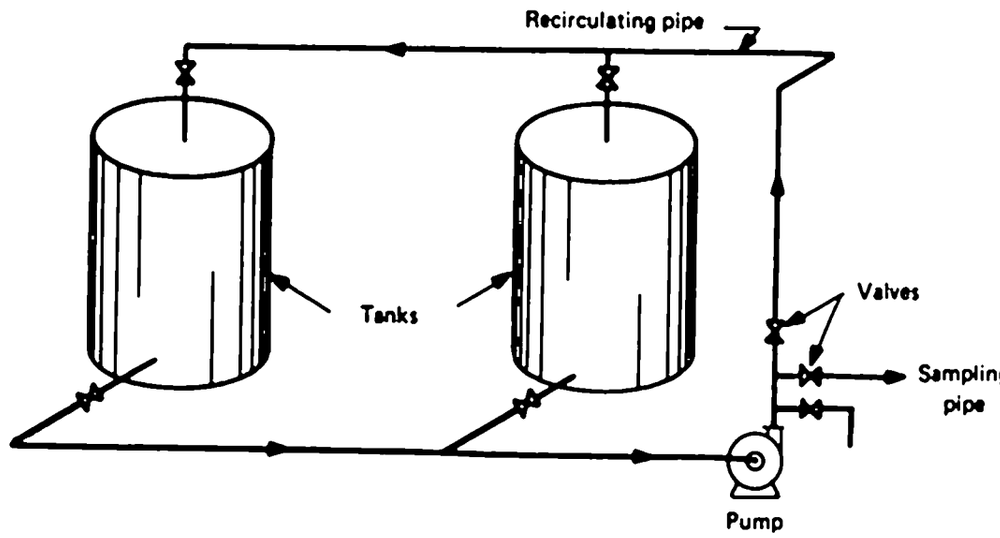

After mixing, the sample should be taken over a period of time while the liquid is still circulating.

Caution

Remember that the material in a pipeline that is not in use may not be the same as the material in a tank. (The tank may have been .led with a different material; the liquid in the pipeline may have come from another tank, etc.)

All pipelines should therefore be well flushed before a sample is taken.

Usually tank cars cannot be mixed or recirculated before sampling and samples must be dipped out rather than taken from a pipeline.

A stoppered bottle attached to a pipe as shown below is used to take such samples.

Sketch on blackboard

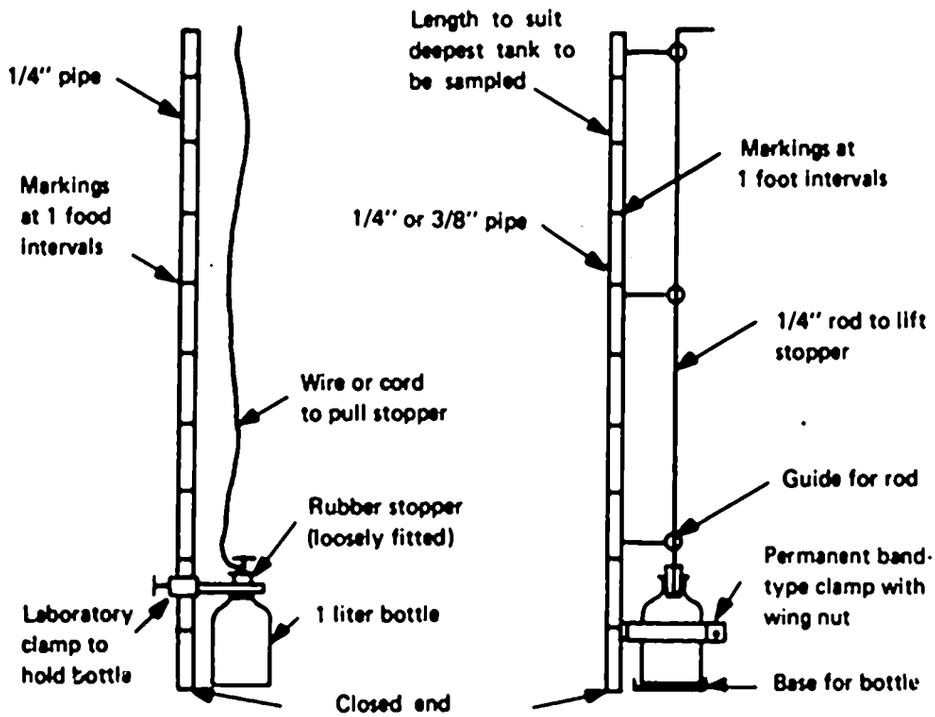

EMERGENCY TYPE PERMANENT TYPE

DEVICES FOR SAMPLING LIQUIDS IN TANKS

For very deep tanks a weighted bottle is lowered on a cord or a chain instead of using the pipe. It is customary to take a sample at least at the bottom, middle, and top of a vertical tank.

The bottle on the pipe is pushed down to the desired depth, the stopper is removed, and the bottle given time to fill before it is withdrawn.

The sample is then poured into another clean bottle which is labeled with car number and depth. It is best to send all three samples to the laboratory, but in some cases the three individual samples can be poured into one larger bottle, thus getting a composite sample.

In large tanks, more than three samples should be taken. In horizontal cylindrical tanks (like a tank car) the quantity of sample taken at each location should be proportional to the volume at that level.

For a full car this would be about three parts from near the top, four parts from the middle, and three parts from near the bottom. If the tank is only partly full, more should come from the middle, say two, five, and three.

Common sampling procedures

As you have learned from the foregoing, the initial sample you will have taken of a solid material will be from about 80 to 1000 or more lbs. depending on the type material and time covered. This must be reduced to a quantity that is practical to handle and taken to the lab.

But this must be done in a manner which will assure that the smaller amount will still be representative of the original material, otherwise all the care you exercised to get a representative sample will be wasted.

There are several standardized and proven methods of making this reduction, but they must be followed exactly.

The best method is to use a riffle which is shown below:

Sketch on blackboard

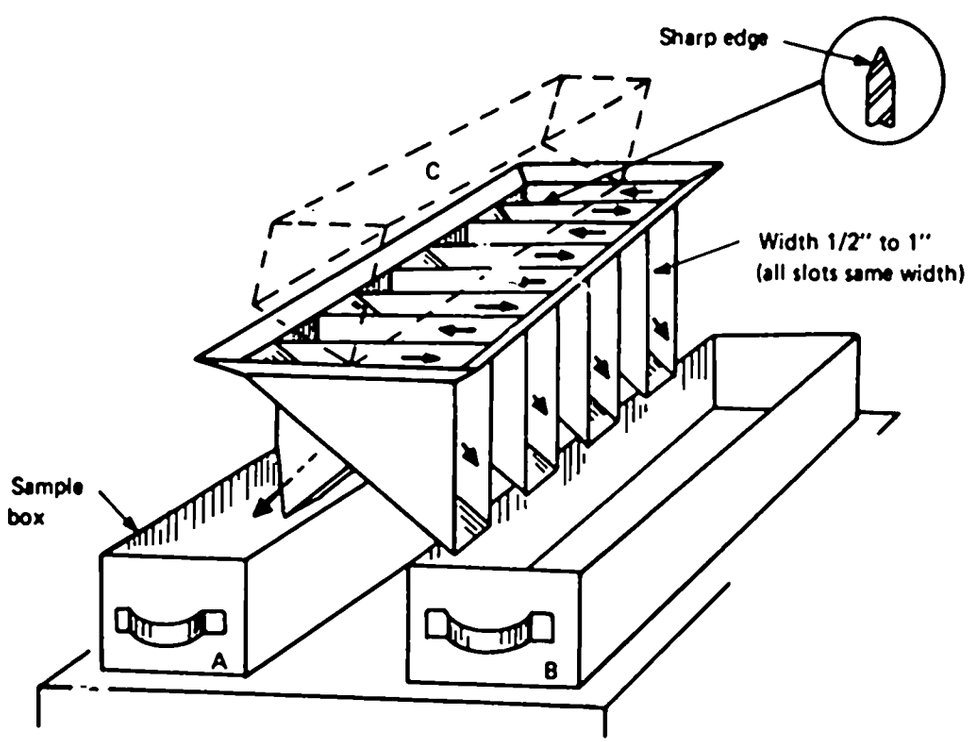

JONES–TYPE RIFFLE
(Support stand not shown)

The riffle consists of a series of sloping chutes assembled side by side. Adjacent chutes discharge in opposite directions. There must be the same number on each side.

There are also three steel pans which are the same length as the riffle section and fit under the chutes. The gross sample is poured into one box (C)

and spread to a uniform depth. With boxes A and B under the chutes, box C is *centered* on the riffle and its contents poured through.

Thus the riffle divides the sample into two equal parts in boxes A and B. For further reduction box C is placed under the chute and the contents of box A are mixed by tilting it from end to end several times.

After leveling its contents, box A is poured through the riffle. The sample in box C is then ¼ of the original sample. This can be repeated.

The material in box B is termed *rejects* and is discarded or it can be used to obtain additional samples, such as one for screen analysis, by riffling. Properly used, the riffle gives very accurate division of the sample.

11

Coning and quartering

Another standard method of sample reduction is called "coning and quartering." It is usually used when the quantity of material is large (+500 lbs.) or it is wet and sticky and won't go through a riffle. As the name implies, a right, vertical cone is formed on a flat surface and then quartered. In this method as each sample increment is taken, (usually with a shovel)it is carefully poured onto the apex (top) of the conical pile which is being formed. As material is added it rolls or slides down the surface of the pile. Great care must be taken to keep the top centered on a vertical axis; it is best to go to different positions around the pile when depositing the increments on top.

Sketch on blackboard

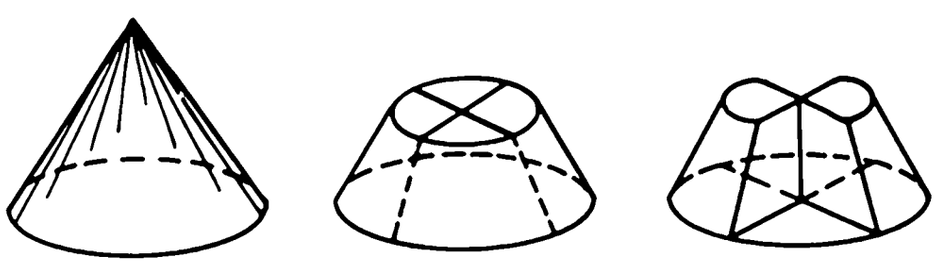

Initial cone — Flattened and marked — Opposite quarters removed

STEPS IN SAMPLE REDUCTION BY CONING AND QUARTERING

Put steps on board as they are discussed

When sampling is completed, shovels are used to drag material out *radially* starting near the base of the pile so as to form a flat top cone or a disc. A board is then used to mark two diameters across the pile at right angles to each other.

This divides or *quarters* the pile (disc) into 4 equal segments. Opposite quarters are then shovelled out and discarded. The other two quarters are the sample.

The whole procedure can be repeated with these two quarters to obtain further reduction.

Questions

What are two important points to watch when using a riffle? (The material should be evenly *distributed* throughout the length of the box and the end of the box should be *even* with the riffle section before dumping it.)

What is the most important requirement in coning and quartering? (That the material be poured on the *apex* (top) so that it will run down *all sides* of the cone. Going around the pile while forming it helps to assure even distribution.)

12

General operating instructions

Keep all sampling containers, equipment, etc., clean and in proper mechanical condition.

Keep them in a cabinet or covered when not in use to keep them clean and from being lost.

Be sure sample containers are clean and dry before they are used.

Keep all sample containers closed tightly to prevent moisture loss and dust contamination.

Tag or label each sample container *when it is started* with the proper description (name) of the sample, date, starting and ending time (when completed), etc. Sign your name to show that you are willing to accept responsibility for the accuracy of the sample.

13

Safety

You will frequently be taking samples around moving equipment such as belt conveyors. Handle and use the sampling devices so that they will not come in contact with the belt. Be sure the handle on the sampler is long enough to keep *your hands* out of a danger zone.

Remember the automatic samplers will *start without warning*. A warning sign stating this should be posted. *Always* cut off the power to the sampler *before* cleaning the cutter or working on the mechanism.

When sampling acids and similar liquids always wear a face shield and rubber gloves. Some sampling points may require more protection. Watch out for spray or splatter when sampling liquids.

Carry glass bottles containing acid samples in rubber buckets or other protective containers. This helps avoid danger to you in case of a fall, breakage, etc.

Do not carry heavy samples up or down long stairways. Reduce them to a safe size; make several trips if necessary. Lower filled sample buckets with a rope when required.

After sparging a tank to mix it, remove the sparger pipe with a *little* air on it so that all the liquid is blown out of the pipe.

Do not attempt to handle overweight samples. Lift with your legs and not with your back muscles.

Slides

This slide shows a riffle (with boxes).

This is an automatic solid material sampler (air powered)–B&S Sampler.

This shows an automatic liquid sampler (GCFU sump).

WHAT TO DO	WHAT TO SAY

1

Introduction

Bulk handling of dry fertilizers has become an accepted practice for farmers in many parts of the world. Due to its lower cost, bulk distribution of fertilizer will undoubtedly continue to grow. In the United States today, more fertilizer is used in bulk than as bagged material.

Also, in many parts of the world the growth of the use of liquid and suspension fertilizers has been amazing. Fluid fertilizers accounted for about 22% of all fertilizer used in the United States in 1968.

Much fertilizer, however, still is distributed in the package form. The most common package is the multiwall paper and the plastic sack.

The idea of using "a bag" for storing and transporting products has been around a long time. Prehistoric man used animal skins. There is some evidence that the Egyptians glued together a package made from leaves as early as the year 2,000 B. C. About 1850, the paper bag began to make its appearance in the United States.

Prior to introduction of granulated fertilizers, use of burlap and cotton bags and wooden barrels prevailed almost universally. It was common to package fertilizer in 200-, 167-, 125-lb. bags. Hand sewing was the general practice.

Fiber bags gave way to the multiwall paper sack in the 1950s, and they in turn are giving way to the plastic sack.

2

Operation

Semi-automatic bag filling machines are used in some of the smaller fertilizer plants. In this type of a filling operation, the bag chute and bag clamps are part of the scale weighing beam. The empty bag is attached to the chute and the bag is filled to the correct weight by the operator.

Sketch on blackboard

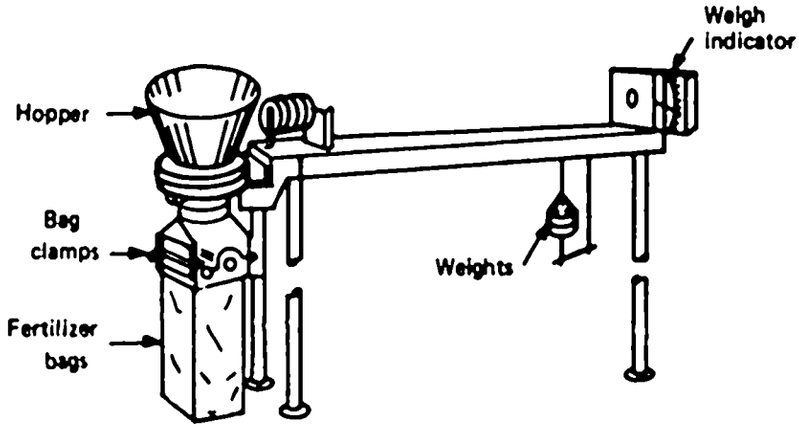

Please note

The bag is filled rapidly for about 90% of its weight and then the filling rate tapers off so the feed can be stopped when desired weight is obtained.

3

Operating duties

At the start of the shift, the first thing that the operator should do is to clamp an empty bag to the filling bell. The tare weight of the bag is then set off on the tare bar, bringing the indicator to zero. The scale is then set for the desired weight.

Important

After filling the first bag or so, the operator check weighs them to make sure the scale is working properly. Every 30 minutes or so during the shift, he should check weigh a bag to make sure the scales are still accurate.

L ·eful not to bag the fertilizer if it is too hot. This could cause it to "set up" in the bag as it cools; also, the heat might damage the bag.

Stress

After filling the bag to the desired weight, about 4 inches of free space should remain so that the bag will handle better. Not only will the bag stack better but there is less damage done to the bag in handling.

Sealing is the most critical item in the bagging operation. If it is not done properly, material will leak out in transit or moisture will leak into the bag causing further damage.

Bag conveying equipment can also cause damage to the sacks of fertilizer and should be watched with care.

Proper truck or car preparation for transit cannot be over emphasized. All extraneous material must be removed from the floor and sides of the vehicle.

Pad well any rough spots found in the floor or walls of the transit vehicle so that the bags will not be damaged in transit. The stacking or loading pattern should be in such a way so as to minimize damage to the bags in transit.

4

Operation

Automatic fertilizer bagging machines are available for just about any type of bag. Some will operate automatically on a pacesetting basis, or they can be operated manually, calling for the charges as needed. Open-mouth or valve-type plastic or paper bags are available.

The following sketch shows how a valve packer works:

Sketch on blackboard

Explain

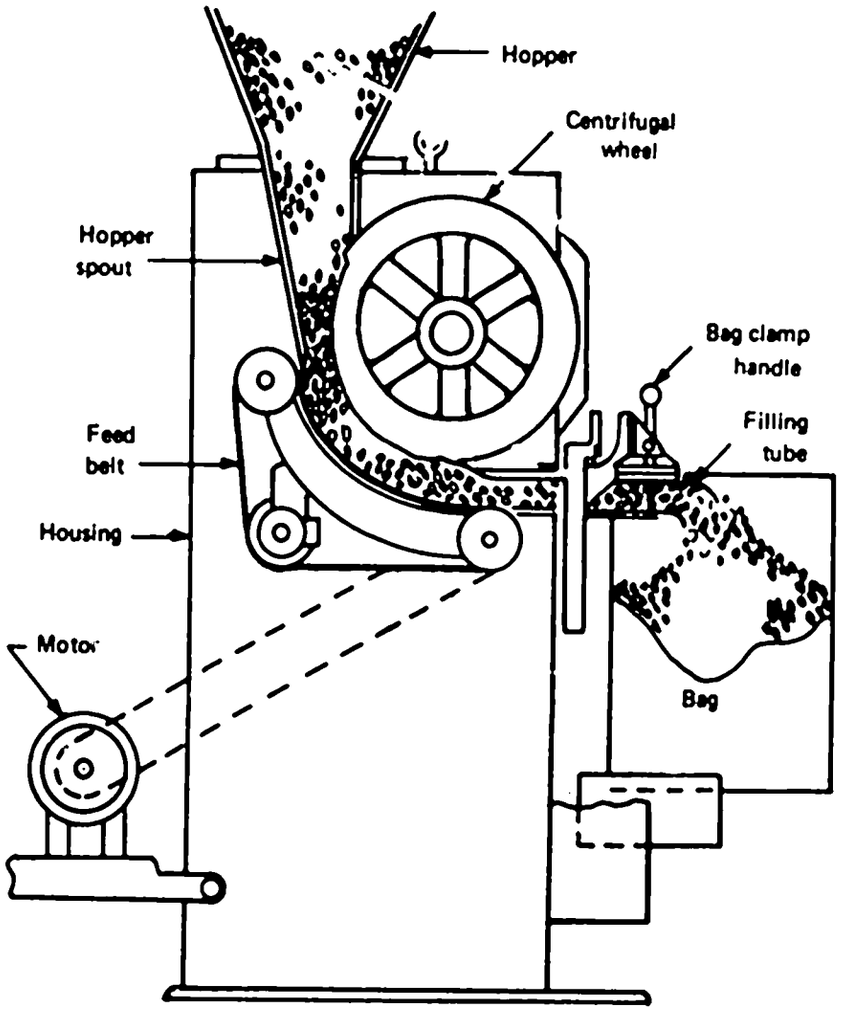

Tell class why

At the start of the shift, the operator should check weigh the first 2 or 3 weighings to make sure the machine is weighing correctly.

Every 30 to 40 minutes during the shift he should check weigh a bag or two to make sure the machine is still weighing accurately.

Leave the weigh hopper, filling hopper, and bagging machine empty during any long break to prevent material caking in the hopper.

Clean the scales and filling machines at the end of each shift.

5

Preventive maintenance

Neglect is the main reason that bagging machines fail to give satisfactory operation.

Clean the machines at the end of each shift.

At least once each month have the repairman to check the bagger for worn or defective parts.

If the bagging operation is suspended a few days, run the machine idle for a short period each day to keep all parts in good working order.

At the end of the fertilizer season, clean and grease all necessary parts to avoid rusting.

6

Lubrication

Lubricate ball bearings every week and other points each day as conditions require, but do not over grease.

Those plants that sew bags sometimes make it a practice of storing the sewing heads in a bath of clean lubricating oil until the next shift.

7

Safety

It is recommended that the operator wear protective eyewear when working with packaging equipment for fertilizer.

The worker should wear respiratory equipment if the area is very dusty.

When check weighing bags of fertilizer, care should be taken to see that employees lift with their legs, not with their backs.

8

Show slide The first slide shows an automatic bag filling machine of valve bag type.

Question Does this machine use paper or plastic bags? (It can use either one.)

Show slide The second slide shows a filling line using open mouth bags.

Question How is the bag closed after it is filled? (Open mouth paper bags are sewed. Some are taped after sewing. Some are closed with adhesive. Plastic bags are usually closed with a heat seal.)

Show slide The next slide shows palletized bags in storage.

Question Why is it important that the bags not spill fertilizer while in storage?

There are several reasons. One, it represents a loss of material. Second, some fertilizers are hygroscopic; material will absorb moisture until an entire stack of fertilizer could be ruined.

Are there any other questions on the packaging of fertilizers?

WHAT TO DO	WHAT TO SAY

1

Introduction

Many fertilizer plant operations depend on the movements of liquids or gases. The equipment used to move fluids are pumps for liquids and compressors for gases.

Compressors are similar to pumps and function according to the same theoretical principles. They cannot be interchanged because of special features such as seals, cooling, etc. The term "fan" is used to designate low-pressure, high-volume gas moving equipment.

There are many kinds of compressors and pumps such as:

1. Piston pump	Piston compressor
2. Diaphragm pump	————
3. Gear pump	Lobe compressor
4. Vane pump	Vane compressor
5. Screw pump	Screw compressor
6. Propeller pump	Axial flow fan
7. Centrifugal pump	Centrifugal fan
8. Turbine pump	Axial compressor

2

Centrifugal pump and fan

most common equipment used for fluid movement is a centrifugal fan for gases and a centrifugal pump for liquids. They are driven by rotary motion using drivers such as electric motors or steam turbines. They give continuous flow at a constant pressure.

Sketch on blackboard

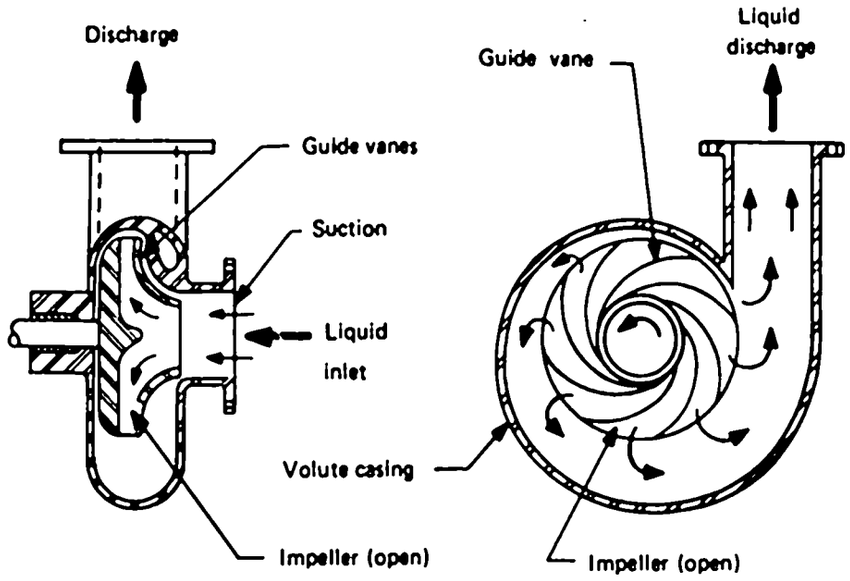

CENTRIFUGAL PUMP

Sketch on blackboard

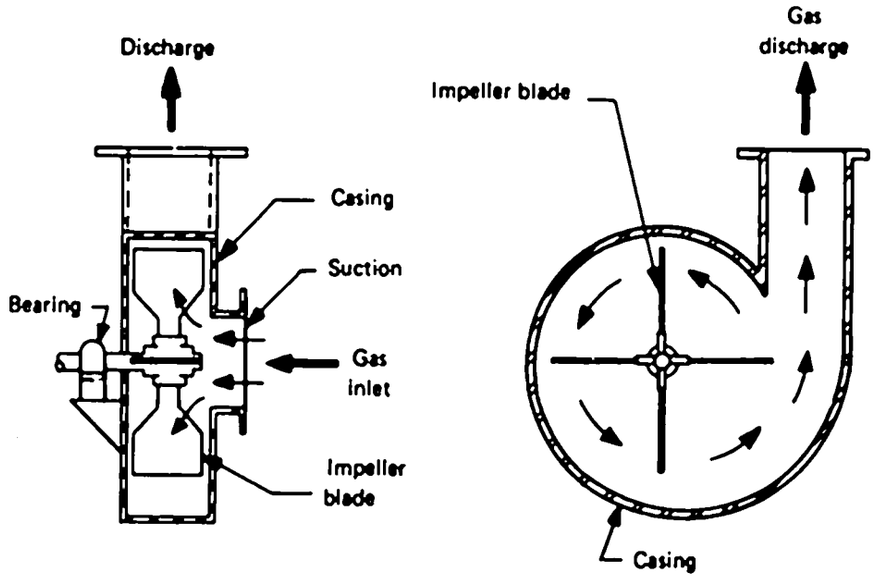

CENTRIFUGAL FAN

The fans can handle dusty gases while the pumps can handle liquids that contain finely divided solids (slurry). Fans are only one stage while pumps can be multistage. The pressure developed in one stage is limited but usually sufficient for normal fertilizer plant usages.

3

Turbine pump
Axial compressor

Turbine pumps and axial compressors are similar to the centrifugal equipment just described with the addition of guide vanes on the fan and a

diffuser ring on the pump. These additions give more efficient operation and higher pressures, especially when the units are multistaged.

Propeller pumps
Axial flow fans

Propeller pumps and axial flow fans are used to [illegible] large volumes of fluid against small heads. Each has a rotating p[illegible]er element to induce fluid flow.

Sketch on blackboard

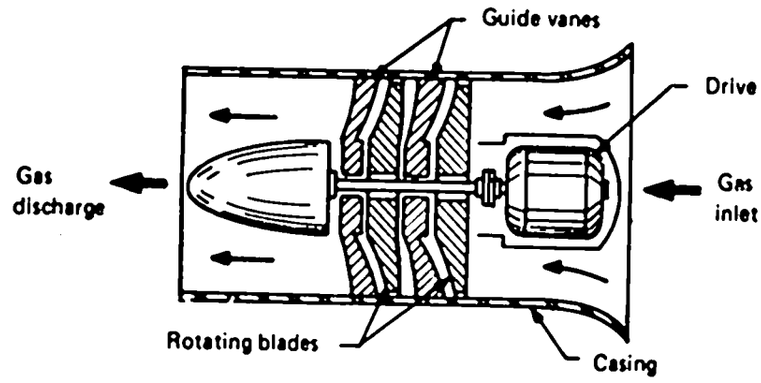

TWO STAGE AXIAL FAN

Sketch on blackboard

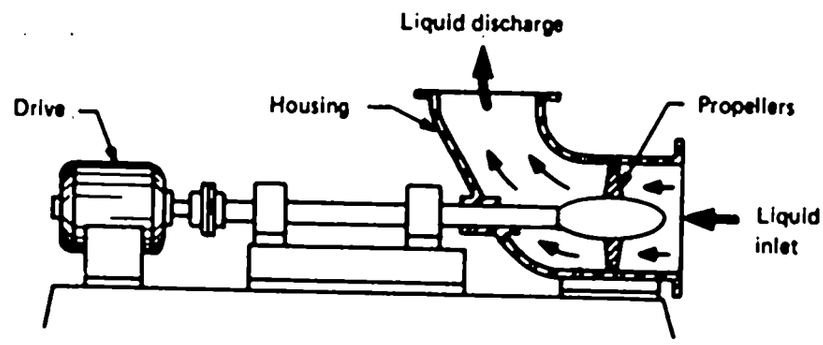

ELBOW-TYPE PROPELLER PUMP

Gear, vane, screw pumps and compressors are positive displacement machines that are driven by rotary motion. These types of pumps are useful for handling semi-viscous materials. Both pumps and compressors are useful where positive displacement is needed.

Sketch on blackboard

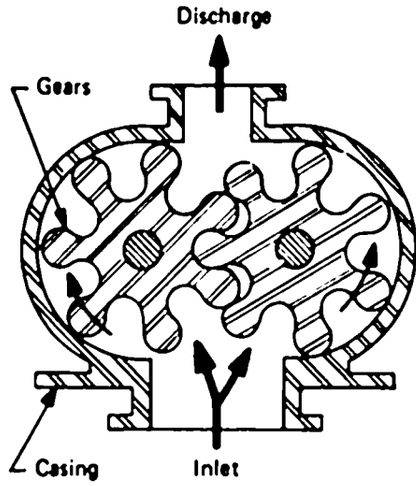

GEAR PUMP

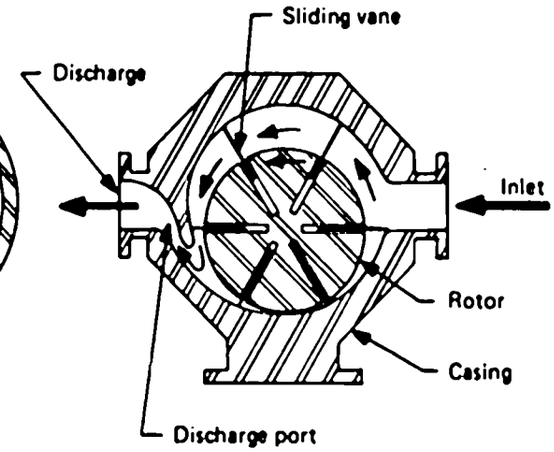

VANE PUMP

Sketch on blackboard

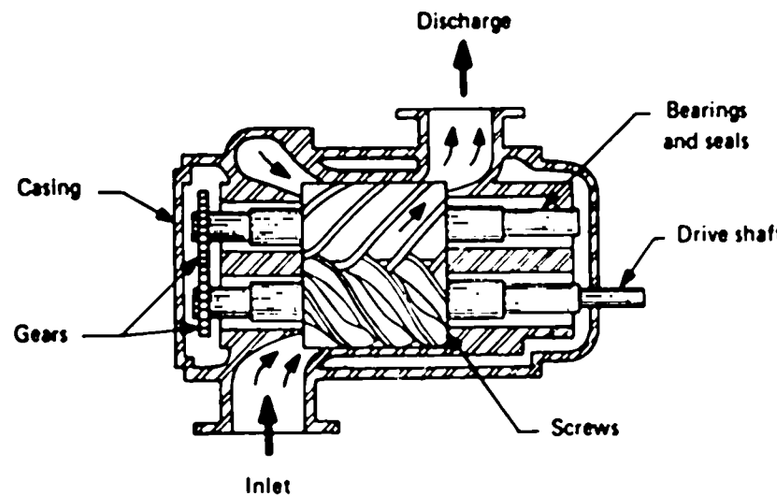

SCREW COMPRESSOR

These pumps are self-priming.

Diaphragm pumps do not have a comparable gas handling compressor or fan. Many diaphragm type pumps are used for metering devices; some are also used as sump pumps. This pump has a pulsed output and can be driven by mechanical motion, air pressure or hydraulic pressure. The volume output can be varied by the stroke length. This pump can handle liquids that contain vapor or gases or liquids that contain substantial amounts of solids.

Sketch on blackboard

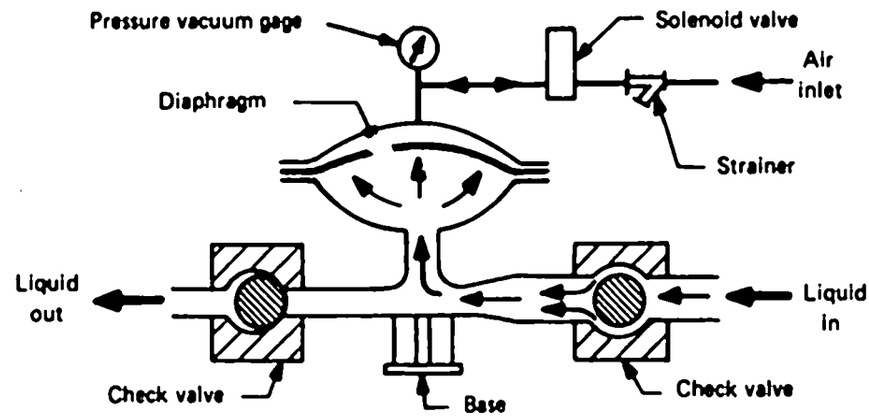

DIAPHRAGM PUMP

4

Piston pumps and compressors are reciprocating machines. These machines have a pulsed output. They can develop fairly high pressure (pumps in a single stage while compressors require multistages). These machines can handle liquids containing gases and are self-priming.

Sketch on blackboard

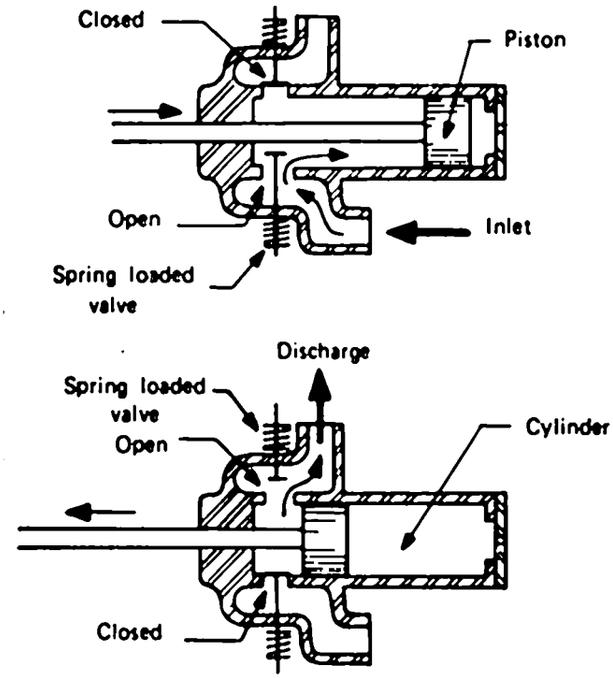

5

Operation

Pumps require attention and periodic adjustment. Indication of improper pump operation is evidenced by falling rate or non-flow, failure to fill or empty a vessel, or observing the discharge stream. The line pressure after the

pump is another indicator of pump performance. Pumps should be observed several times each shift. Seal water should be adjusted to a slow drip, packing should be tightened as necessary to prevent excess leakage. Excessive leakage can mean the packing is worn out.

Bearings require lubrication and the reservoir needs checking daily. Noisy bearings in the drive motor or pump is an indication of impending failure.

Pumps may be hard to rotate because of solidification in the casing. This is especially true when trying to start a spare pump that was inadequately flushed when shut down. The same trouble occurs when the impeller drags on the casing. All pumps should be rotated by hand before applying power.

Fans also require attention. Abnormalities are noted by inadequate flows, dusting, or low pressure. These can be caused by ducts, equipment or the fan filling with dust.

Fans often are belt driven. Belts slip and soon burn up if not tightened. The odor of burning rubber or the squeal of the slipping belt are symptoms of this trouble.

Bearings require daily lubrication and should be checked several times a shift for excessive temperature.

Positive displacement pumps and compressors require special startup and shutdown procedures. While this class of equipment is usually provided with pressure relief valves, correct valving at startup is desirable as the force generated in a sealed piston can cause severe mechanical damage. To reduce the starting motor load, many machines are started "unloaded." This term means the inlet and outlet valves on reciprocating machines are blocked open so no pressure is generated. On rotary machines, such as gear or vane pumps, the discharge flow is bypassed to the suction at startup. At shutdown the machines should be "unloaded."

6

Preventive maintenance

The packing or mechanical seal fluid must be kept flowing or early failure will occur. The packing should be adjusted as needed and replaced when worn. Improper packing adjustment will cause roughening of the shaft. The adjusting bolts should be moved equally to keep the packing follower square with the shaft. Overheating of the packing gland is an indication of improper adjustment–too tight or misaligned. When pumping hot solution, the gland will naturally be hot. Packing life can be extended by flowing a stream of

water over the gland in this circumstance. There are many types of packing available—the best is usually found by trying several types.

The bearings require lubricant and periodic replacement. Noisy bearings is a sign of impending failure.

Head gaskets also require replacement. Early signs of failure are drip leaks although sudden failure can also occur.

Under unusual corrosive or erosive conditions the impeller may corrode away in a few hours while casing failure usually occurs over a longer period.

Leakage on the pump base plate will cause the plate to corrode away. This can cause misalignment of the pump and drive and result in coupling failures.

7

Safety

Gloves, face shield and hard hats should be used to protect against leaks or sprays at the pumps and piping. The moving parts of the exposed drive should be guarded.

8

Questions

What is the purpose of a pump or compressor?

What are three types of pumps?

What are three types of compressors?

Outline steps for starting a centrifugal pump.

What types of drives are used for pumps?

What common adjustment is required on a centrifugal pump?

Why is seal water used on a centrifugal pump packing?

WHAT TO DO	WHAT TO SAY

1

Introduction

This chapter covers piping systems with the exception of pumps which are discussed in chapter 9 and storage tanks in chapter 3, and process vessels. A piping system is made up of pipelines, valves, pumps and storage tanks or process vessels. Its purpose is to move a fluid (a liquid or gas) from one place to another.

Pipe is made of many materials. The material is selected to safely contain the fluid handled. The pipe size is chosen to handle the maximum flow rate expected.

2

Valves are used to block flow. Valves are also used to regulate flow rates. Sometimes the same valve serves both purposes. Valves may be operated either manually or by instruments.

Types of valves

There are many kinds of valves. Each has a particular advantage.

Gate valves are usually used for on-off service. They have a guided sliding gate that is operated by a threaded or sliding stem. These valves give unrestricted flow with low pressure loss.

Sketch on blackboard

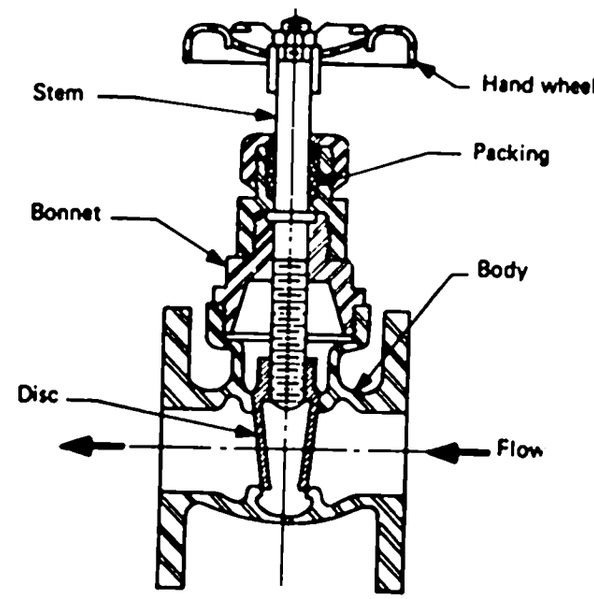

GATE VALVE

Globe valves are generally used for controlling the flow rate. They have a circular opening in the center of the body. A disc or tapered plug partially fills the opening to control the flow. The disc or plug is moved by a threaded or sliding stem. These valves are called *Throttling* if hand operated. Many automatic control valves are sliding stem globe valves.

Sketch on blackboard

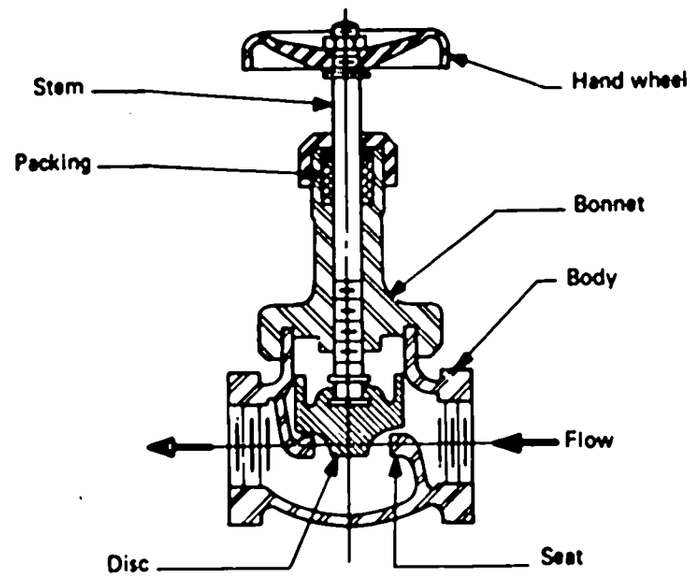

GLOBE VALVE

Ball valves are used for both on-off service and for flow rate control. A full pipe opening through a sphere is the operating element. The sphere is sealed with seat rings. A stem extends through packing to an operating lever handle.

Sketch on blackboard

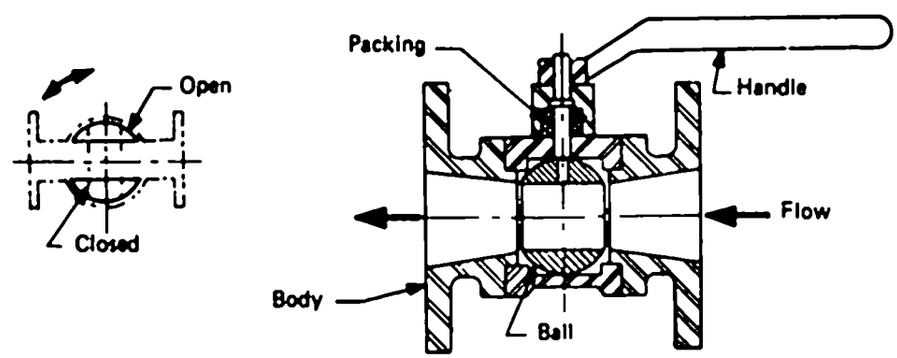

BALL VALVE

Butterfly valves have a flat plate that rotates from the edge parallel to the flow when open to blocking the flow when closed.

Sketch on blackboard

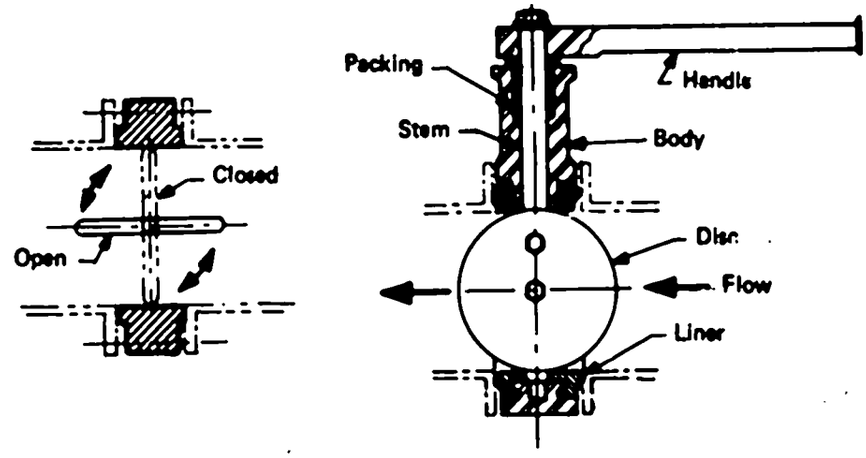

BUTTERFLY VALVE

Valve operation

They are operated by rotating the stem. These valves are compact and simple. They have low pressure drop and are used for both on-off service and for flow rate control.

There are many other types of valves. Some are flush bottom, pinch, needle and weir-diaphragm valves.

3

Valves are generally hand or manually operated, hydraulic or pneumatic operated or motor driven.

Hand-operated valves have a hand wheel or lever for operating. Some valves in inaccessible places have a chain loop around a notched wheel. These valves are operated by pulling the chain.

Hand-wheel valves can have either rising or non-rising stems. The stem threads of a non-rising steam valve match with threads in the gate or disc.

Sketch on blackboard

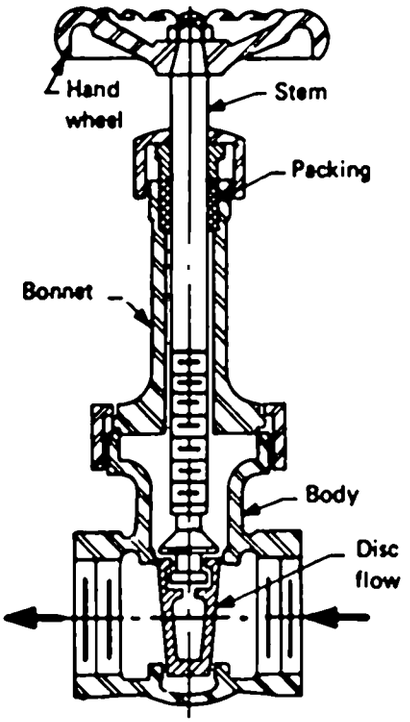

RISING STEM GATE VALVE

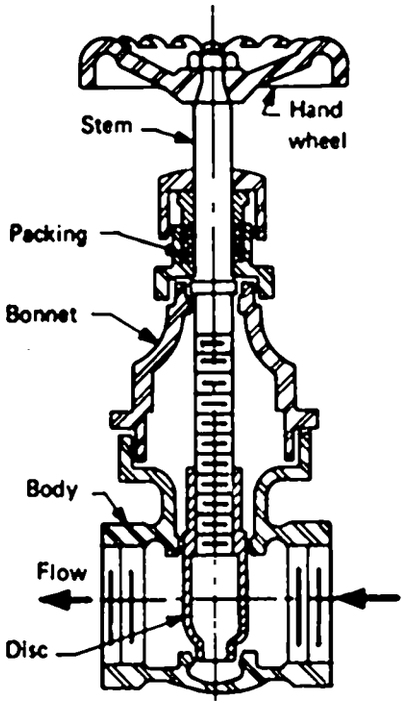

NON-RISING STEM GATE VALVE

4

Automatic control

When the changes in a process variable (that is flow, temperature, pressure, etc.) are measured and the proper action is some type of valve movement, automatic control is possible. The valve movement is caused by a hydraulic, pneumatic or motor operated device.

These types of controls can be operated from locations away from the actual valve. They usually can be operated manually where the valve position is set by the operator or automatically where the process variable and the instrument set point determine the valve position.

Sketch on blackboard

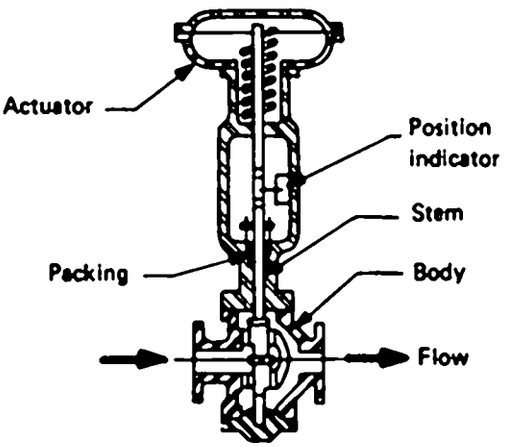

CONTROL VALVE

5

Special valves

Check valves are often found in piping systems. There is no operation of this class of valves. The function of these devices is to allow flow in only one direction. A caged ball or swing gate in the stream are common forms of these valves.

Sketch on blackboard

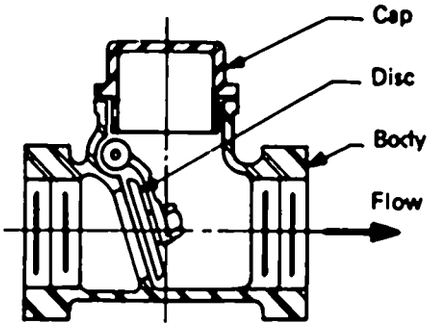

SWING CHECK VALVE

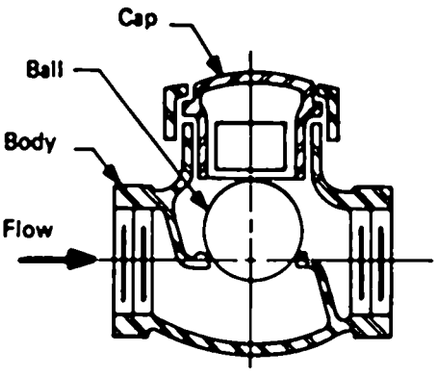

BALL CHECK VALVE

Safety valves are also found in piping systems. Again there is no operation of these valves. They are installed to relieve excess conditions, usually pressure. Many safety valves are spring loaded plugs that open when their set conditions are exceeded.

6

Piping systems are connected to storage tanks or process vessels. The system may also have pumps, meters, strainers, vents or drains, and washout connections.

7

Operations

Flow in pipe systems may be either continuous or intermittent. The flow rate may be continuous and closely controlled as in a process operation. Intermittent flow, as when filling a tank, is usually at the system flow capacity.

Most hand-wheel valves have a clockwise rotation to close. Counter-clockwise rotation opens the valve. Resistance is felt as the valve comes either completely open or closed. The position of a rising stem valve can be checked by the extension of the stem beyond the hand wheel. Valve positions can be reproduced by counting the number of complete whe\ rotations ("turns") from the closed position to the normal operating position. This is most effective with globe valves because the flow is near

linear. Gate valves are poor because after they are about 1/3 open, further opening gives little additional flow.

The position of ball and butterfly valves is usually indicated by the lever position or a mark on the end of the stem.

Automatic valves with sliding stems usually have indicator scales with a pointer on the exposed portion of the stem.

8

Operating duties

Before starting a fluid flow, the pipe system must be inspected. The valves in the system are set to properly direct the flow. Drains and vents are closed to prevent loss or hazard from spills.

During operation, the proper flow rates must be maintained by observing meters and adjusting valves. The source vessel levels should be checked to make sure of an adequate supply of material. The pipe system should be inspected for leakage, excessive vibration or unusual sounds.

Gaskets can fail without warning. Vibration can wear or break pipe. Noise is an indication of abnormal flow conditions. Sometimes the valve element comes off its stem. This condition can be recognized as the handwheel turns easily and no change in flow rate occurs.

Proper shutdown of a piping system can save much time and trouble. Some fluids require that the system be emptied. The usual steps are to drain or flush the system and then close block valves to keep the lines empty.

9

Preventive maintenance

Leaky gaskets or joints should be promptly repaired by either tightening or replacement.

Pipe vibration or unusual noise should be reported. Flow control valves that operate completely open or require use of bypass valves should also be reported.

A frequent problem encountered are valves that fail to completely shut off flow. Valves should not be forced closed but only tightened moderately. Excessive closing force will twist off the stem or ruin the valve internals. These conditions mean the valve needs repair.

The packing on valves should be tightened only enough to stop leakage. Too much tightening makes the valve hard to operate. Valves should be repacked when two-thirds of the adjustment is used.

Lubrication

10

A piping system requires little lubrication. Many automatic control valves have stick lubrication of the stem. Coating the threaded stem of manually operated valves with grease eases their operation and prevents corrosion.

11

Many materials handled in piping systems are hazardous. Knowledge of the fluid in each line is necessary for safe operation.

Leakage of fluids can spray acids or hot solutions. Good eye and hand protection is needed when operating valves as the stem packing may leak. Valves should be opened and closed slowly to avoid pressure surges.

Some liquids, such as ammonia, create high pressures when trapped between block valves. Never close such materials between valves without releasing the pressure.

Cleaning open end pipes should be done from the side in case flow comes out the pipe end.

Hoses and their connections are a source of danger. Use only good hose that is designed for the intended use.

Never disconnect a hose that is under pressure.

WHAT TO DO	WHAT TO SAY
	1
Introduction	Filtration involves separating solid particles from a fluid. In the broadest sense, the fluid may be a liquid, gas, or a mixture of the two. We will take up the separation of solid particles from a gas first.
	2
	There is a great variety of equipment for the treatment of process dusts which were covered in chapter 4. We will talk about equipment here for the elimination of atmospheric dust.
	Air filters are employed in the elimination of atmospheric dust.
	Process dust concentrations may run quite high, while atmospheric dust concentrations are generally below five grains per 1,000 cubic feet. Such dust, however, can do a great deal of damage and has a nuisance factor unless it is removed.
	3
Write on blackboard	Air filters may be classified in three groups: viscous, dry or automatic.
Viscous filters	Viscous filters are so called because the filter medium is coated with a viscous material to retain the dust. These units are usually made up of small cells fitted together to form a large unit.
Note material of construction	The filter pad may consist of such materials as glass fibers, animal hair, wood shavings, corrugated paper, split wire, or metal screening. The cell may be removed, cleaned, reoiled, and then placed back in service.
	Other types are discarded once the maximum allowable dust load has accumulated.

Dry filters

4

Dry filters are somewhat similar in size to viscous filters, except that the depth is greater. They generally are sheets of cellulose pulp, cotton, felt, or spun glass.

Some types, such as those made of felt, can be cleaned and used over. Most of the time, however, they are replaced with new filters.

5

Automatic filters, as the name implies, are those in which the cleaning operation is essentially continuous and automatic.

Sketch on blackboard

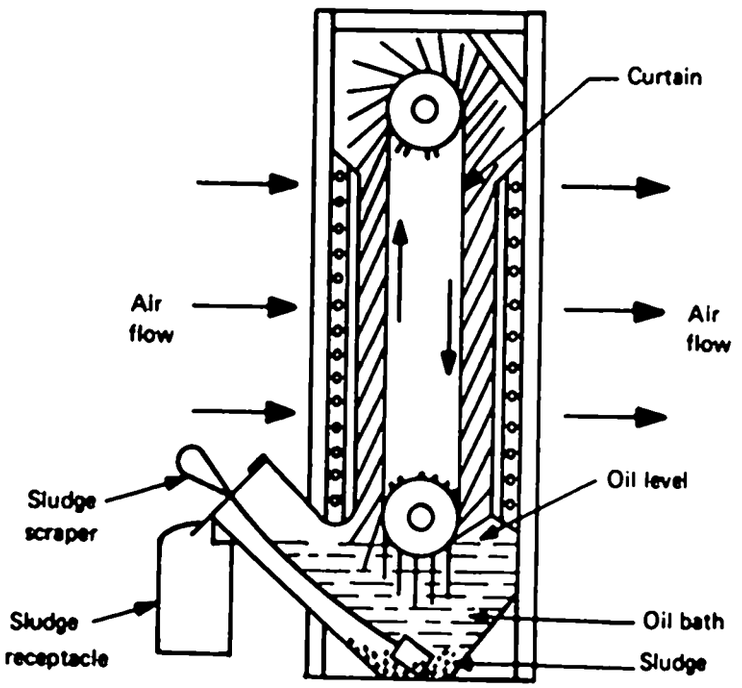

The oil bath serves to rinse out the dust and coat the screen with a fresh film of oil.

Operating duties

6

The matter of a proper schedule for servicing air filters cannot be over emphasized.

The pressure drop through the filter increases as dust accumulates. Of course, as the pressure drop increases, the air flow decreases and the cleanliness of the air suffers.

The maximum allowable pressure drop would be from 0.20 to about 0.50 in water, depending on the type of filter medium.

7

Questions

What is the life of a dry filter handling average city air? (1 to 3 months)

What is its life in an average chemical plant? (2 to 4 weeks)

Why would you want to use an air filter on the air intake on an engine or compressor? (Would give clean air and cut down the wear on engine parts)

8

Introduction

One of the problems that we have in operating a fertilizer palnt is the separating of solids from liquids. When the amount of solid is relatively small as compared to the liquid, the process is usually called filtration.

Important types of filters are sand filters, filter presses, leaf, rotary, and pan-type filters.

9

Filter aid

For sludges that are difficult to filter, it is sometimes possible to increase filtration rate by adding a filter aid. This is a solid material, finely divided, but consisting of hard particles.

Filter aids can be made into a solution and used to coat the filter medium or mixed with the material to be filtered. They prevent the sludge from becoming so entangled in the filter medium that the resistance to flow becomes high.

Diatomaceous earth, which is the fossil remains of sea plants, are widely used for this purpose.

10

Filter press

The traditional method of filtration is the filter press. In this method a filter cloth is placed between each plate.

Sketch on blackboard

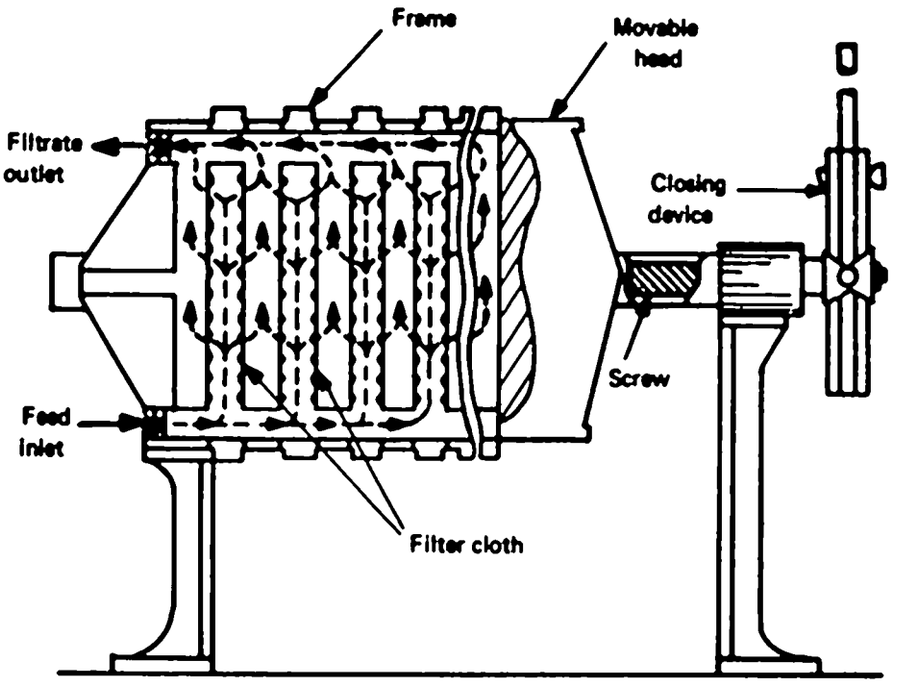

The material is recovered by opening up the press and removing the cake from the filter cloth.

Filter aids may be used to coat the filter cloths or can be mixed with the material to be filtered.

11

Pressure leaf filters

An improvement over the filter press is the pressure leaf type filter. The standard filter press of this type in most process industries is the Sweetland Pressure Filter. It consists of a split pressure shell with a hinged bottom.

Suspended inside is a series of circular filter leaves which drain through individual sight glass outlets.

Assuming that the cloth-covered filter leaves are in place, the filter aid solution is pumped into the leaves. When the leaves are coated, without losing pressure, the solution to be filtered is pumped to the filter.

Sketch on blackboard

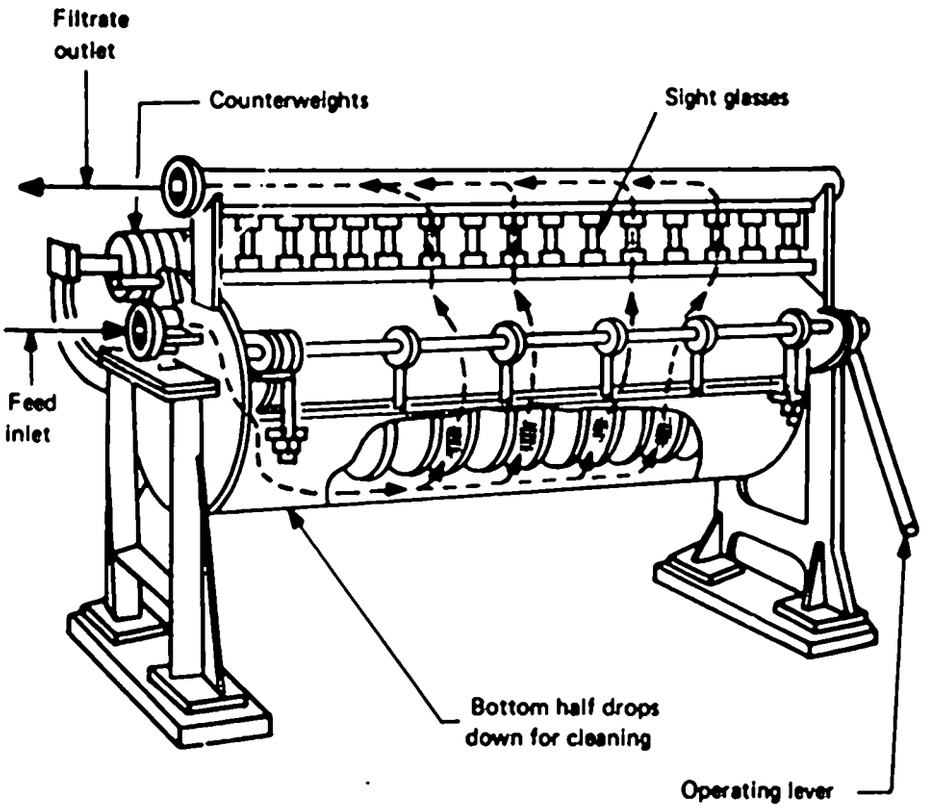

Point this out

When the filtrate is clear, it is sent to the product tank. If one of the leaves does not clear up, it must have a hole in the cloth, and it is shut off.

Filtering is continued until the pump pressure builds up and the flow rate of the clear solutions indicates that the filter needs cleaning.

12

Rotary filters

The oldest and most popular continuous vacuum filter is the conventional rotary drum. It consists essentially of a cylindrical drum supported in an open tank in such a manner as to allow rotation of the drum.

Sketch on blackboard

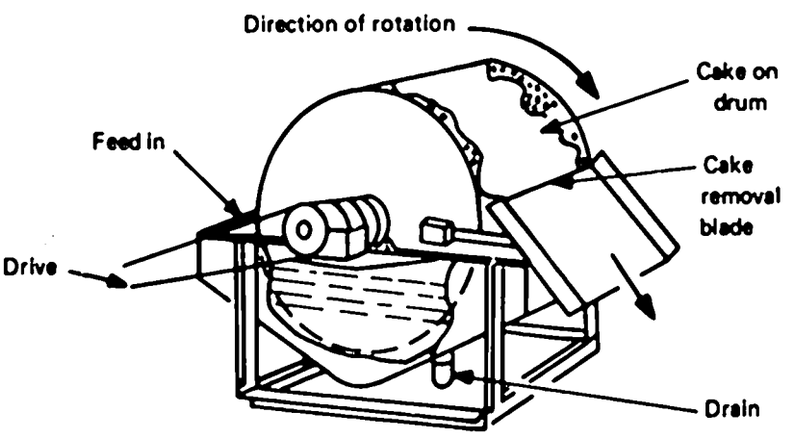

The lower portion of the drum is submerged in the material to be filtered.

As it rotates through the solution, the suction on the screen causes a cake to build up.

As the drum rotates, the cake dries.

A doctor blade removes the cake before that section of the drum is submerged again.

13

The majority of the rotary drum-type filters suffer in some respect when it comes to washing the cake.

Tilting pan filter

The horizontal table type filter gave good washing put poor cake removal. This problem was solved with the invention of the tilting-pan filter.

These filters consist of pie-shaped pans with the center portion connected to a vacuum distributor. As the unit rotates, the pans are consecutively loaded with slurry, dewatered, washed and rewashed, until they are finally tilted to discharge the cake.

Sketch on blackboard

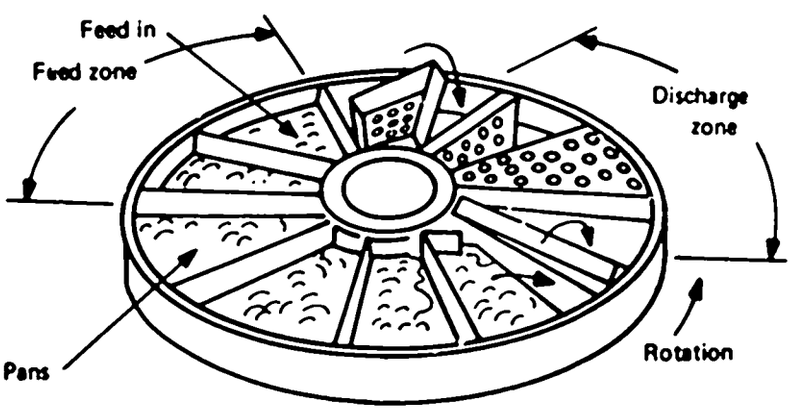

Tilting-pan filters have complete wash containment and good cake discharge. They are expensive, however, and have a lot of mechanical parts that can give trouble.

14

Operating duties

When operating a filter, watch the solution going through the filter. It is a clue as to how the filter is operating.

If it is dirty, it means that a portion of the filter is not operating properly. Locate and isolate that portion of the filter if possible.

Watch the pressure of the material going to the filter and the volume of liquid coming from the filter.

Explain how

These two items will tell you when the filter needs cleaning.

15

Preventive maintenance

Plate and frame filters and leaf filters require very little maintenance.

Depending on the material of construction, if they are going to be out of service any length of time, it might be desirable to spray the plates and frames with a preservative oil to keep them from rusting.

Filter cloths or metal screens must be changed when enough of them develop leaks so as to cut down seriously on the output of the filter.

Rotating filters should be lubricated according to the manufacturer's recommendation.

16

Safety

Care should be used when filtering materials.

If the materials are toxic, proper ventilation and respirator equipment should be obtained before operating the filter.

When starting to clean a filter, shut off feeds, relieve the pressure, and drain before opening up the filter.

Be careful that you are not splattered with liquids when the filter is opened up for cleaning.

17

Questions

What is the purpose of filter aids? (They make it possible to increase the filtration rate.)

What is the advantage of a plate and frame filter? (Simplicity, inexpensiveness, flexibility, and ability to operate as either a cake filter or clarifying filter.)

About 40% submergence of the drum in a rotary drum filter is standard. Why is it not more than this? (That is about the maximum without resorting to trunnion stuffing boxes.)

18

Slides

The first slide shows a plate and frame filter. Explain details.

The second slide shows a Sweetland Filter. How does it differ from the Plate and Frame Filter. (The bottom half swings down to open up the filter.)

The third slide shows a rotary drum filter.

The fourth slide shows a tilting-pan filter. What are its advantages? (Good washing of the cake and good cake discharge.)

What are its disadvantages? (High cost and complicated makeup.)

WHAT TO DO	WHAT TO SAY

1

Introduction

The absorption of gases is an important process in many chemical plants. It is the process in which one constituent is removed or absorbed by another.

In some processes the gas is treated with a finely divided solid. An example would be TVA's process for removing sulfur dioxide from steam plant waste gases by treating with finely divided limestone. We will confine our discussion of absoprtion to the removal of the constituent with a liquid.

Very important

In most cases the rate at which the soluble constituent passes into the liquid is rather slow. For this reason the largest possible surface must be provided for the gas to come into contact with the liquid.

It is sometimes necessary to free a liquid from dissolved gases. This process is called stripping. An example would be the removal of carbon dioxide from solution in water.

2

The function of absorption equipment is to bring the gas and the liquid into direct contact so that the absorption can take place. In most cases, when this occurs, there will be a rise in temperature. The removal of the heat evolved is an important part of the process.

3

Different types of absorption equipment are:

List on blackboard and describe each

1. Agitated vessels. These are vessels in which the gas is introduced directly into the liquid. More than likely the vessel will be equipped with an agitator in order to get sufficient contact between the gas and the liquid.

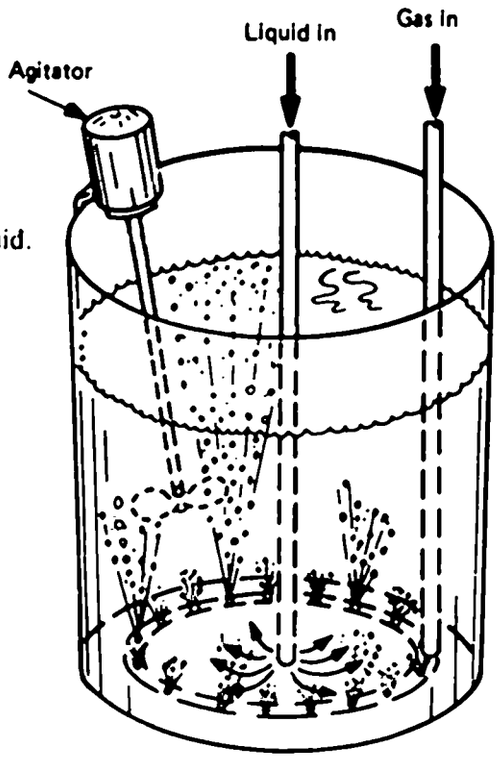

Sketch on blackboard

Sufficient time must be allowed for the reaction and absorption between the liquid and the gas.

The agitated vessel can be operated for batch or continuous operation. In almost all cases, continuous operation is preferred. It can also operate under pressure or at atmospheric pressure.

4

2. Bubble-plate towers. They consist of a number of shallow plates or trays over each of which the liquid flows, in turn, on its way down the tower.

The gas enters at the bottom of the tower and is made to flow through a number of bubble caps on each plate. These caps may be of various shapes. They usually take the form of inverted cups, and their edges are slotted so that the gas escapes from them into the liquid in the form of bubbles.

The absorption of a gas is accompanied by the evolution of large quantities of heat. In order to have good absorption it is necessary to dispose of this heat. Each bubble plate may have a cooling coil or pipe, or every few plates the liquid may be pumped to a heat exchanger to be cooled before returning to the tower.

The bubble-plate tower can operate under pressure or vacuum as well as atmospheric pressure.

Sketch on blackboard

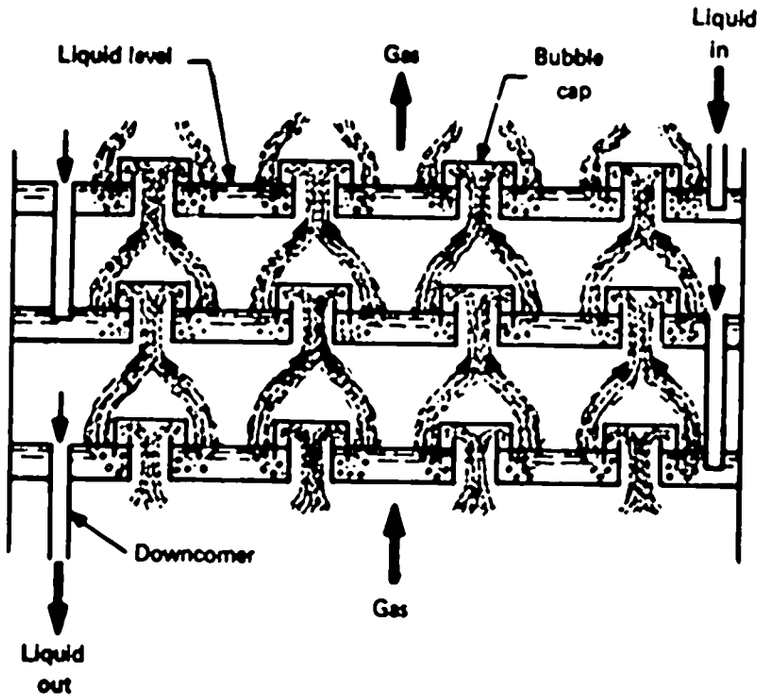

5

3. Spray Towers. A spray tower consists of an empty shell into the top of which the liquid is sprayed by means of nozzles of various kinds. The droplets formed are then allowed to fall to the bottom of the tower through a stream of gas flowing upward.

Sketch on blackboard

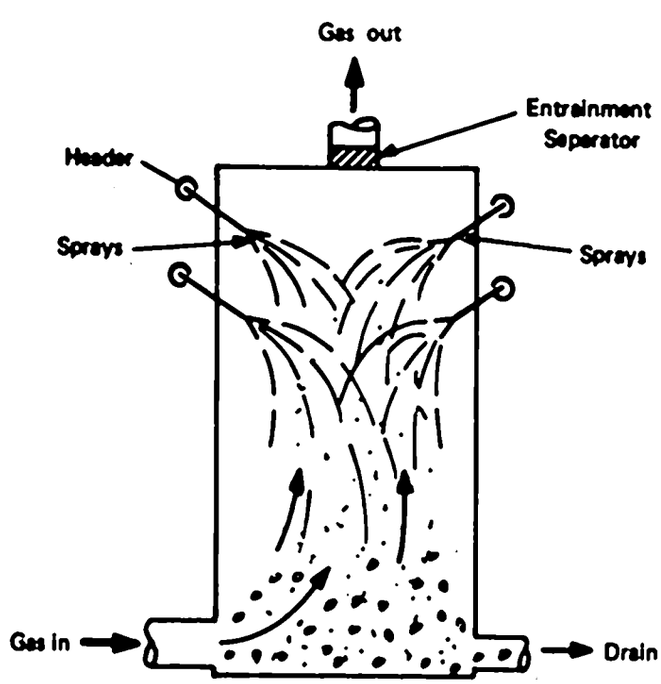

The small droplets tend to come together and form larger droplets, which cuts down on the efficiency of absorption in the spray tower.

The spray tower is now widely used by the fertilizer industry for evaporation and formation of solid ammonium nitrate and other fertilizers. Fertilizers made from the spray tower are called "prills."

Sketch on blackboard

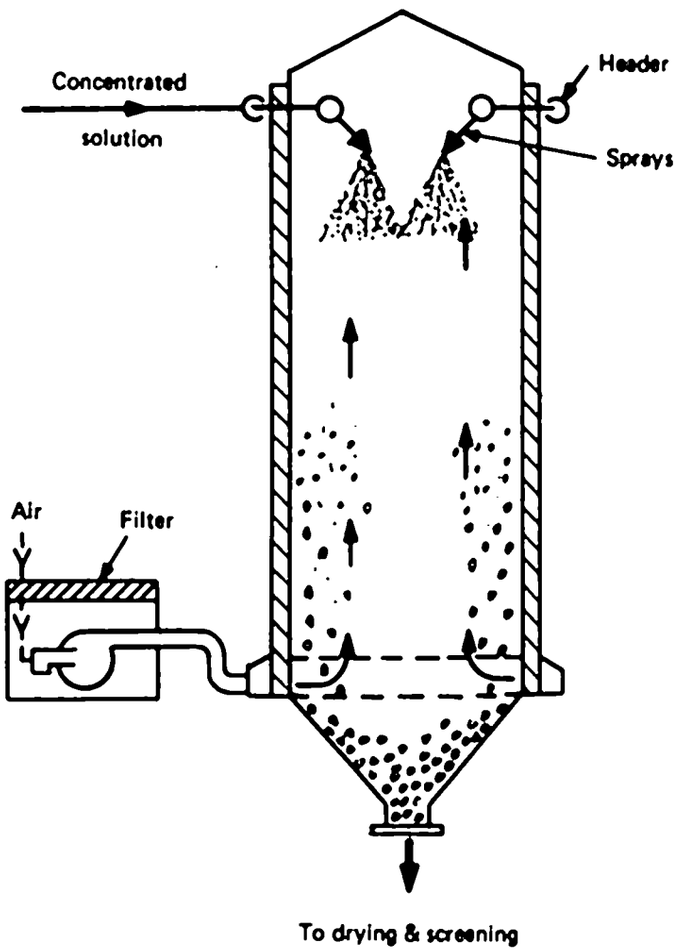

The solutions are concentrated to 95%, or higher, and sprayed under pressure from the top of the tower into a rising stream of air. The solution solidifies in the form of small spheres or "prills" which fall to the base of the tower. They are then dried, screened, coated, and shipped in bulk or as bagged material.

6

4. Packed Towers. A packed tower consists of a shell filled with a suitable material. The liquid is introduced at the top of the tower and flows down over the packing to the bottom. In this manner a large surface area is made available for the gas to come into contact with the liquid.

The gas is generally introduced at the bottom where it flows up through the tower coming into contact with the large surface area which is wet by the liquid. It is on this surface area where the gas is absorbed by the liquid film.

Sketch on blackboard

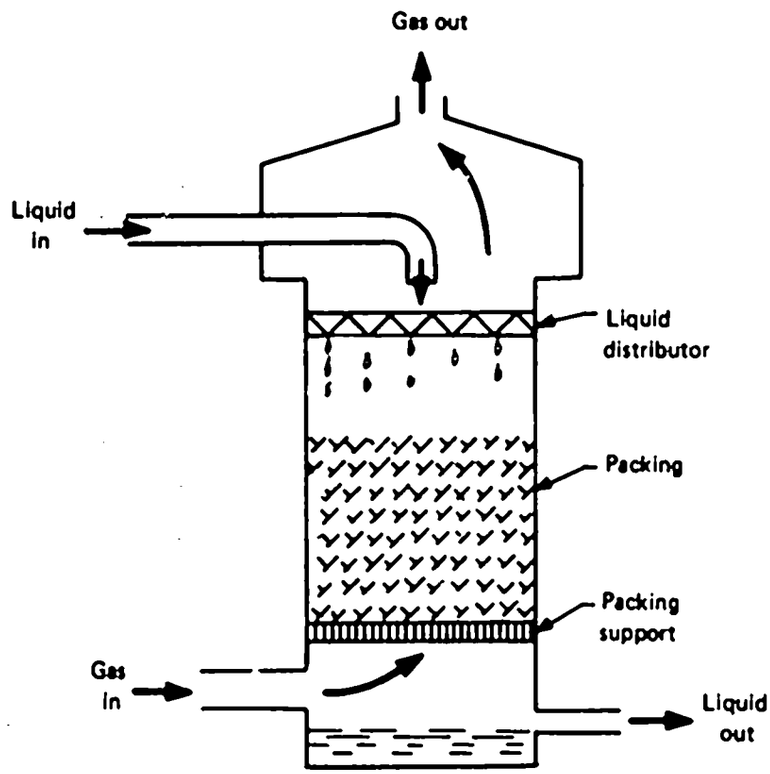

The packed tower is often operated under pressure.

7

5. Cooler-absorber or Falling-film Absorber. When the absorption of the gas is accompanied by the evolution of large quantities of heat, an important function of the absorption equipment is to remove this heat.

This may be done by removing the liquid from the tower and cooling it with an external cooler, or using equipment in which the liquid is cooled within the unit, as in the falling-film absorber.

The gas passes up through tubes and is absorbed by a film of liquid falling down the inside wall of the tube. The cooling medium encases the tube and absorbes the heat.

Sketch on blackboard

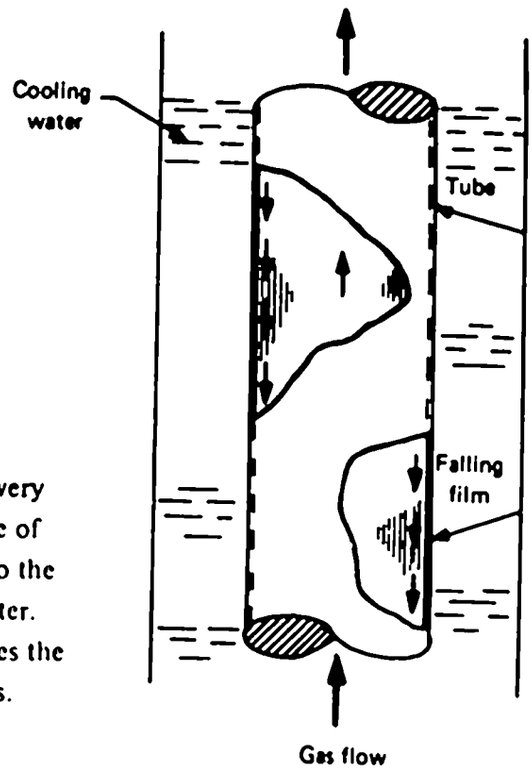

The falling-film absorber is very compact, with the temperature of the acid produced very close to the temperature of the cooling water. One-pass gravity flow eliminates the expense of recirculating pumps.

8

Operating duties - absorbers

When operating absorption equipment, the operator coming on a shift needs to obtain information from the crew on duty as to operating rates, special conditions, or other necessary information.

He should make a round of the equipment under his care as soon as possible–checking pressures, temperatures, flows, levels, and concentrations.

He should especially check the output material from his area to see that it is up to specifications. He should keep a close watch of equipment in his area. Quite often a minor correction early will prevent a major one later.

Also, if a product starts to get off specifications, a minor early correction can prevent ending up with material that has to be reworked or possibly discarded.

If there are filters in the system, watch for pressure drop across the filter and clean or replace filters before the pressure drop becomes excessive.

The skillful operator does not let conditions get out of hand. If the pressure, temperature, flow, or lack of flow, vibration, or even the sound of

the equipment changes and he does not know why, he starts checking to find out what is wrong.

Good absorption operation cannot be obtained unless there is adequate cooling. The operator should keep this in mind and should check to see that there is sufficient flow to the coolers and that the coolers are operating properly.

When the equipment is off the line, this is an excellent time to inspect areas for repairs that are not accessible when it is operating. A good operator never lets up on his housekeeping. A clean and orderly area is one of the very best clues as to the type of operator in charge of that area.

9

Operating duties - spray tower

When operating a spray tower, the operator must keep a close watch on the concentration and temperature of the liquid being sprayed in the tower. This, of course, means watching the neutralizer and evaporation and concentration systems.

He should keep a close check on the sprays for proper operation. If they are partly stopped up, good drying will not be obtained in the tower. This, in turn, will give a product that will cake.

It is also important that the flow of air up through the tower be maintained. When this is done, firm "prills" will be formed that can be removed and dried without the product breaking down to fines.

The good operator, after obtaining information from the operator that he relieves, makes a tour of his area to see that conditions are satisfactory. He learns from experience just what to check and what he can pass by. If something is not normal, he takes steps to correct it and not let it go.

He should never let leaks in steam, air, water, or process lines go unrepaired. Such leaks, if allowed to continue indefinitely, will cost many times what it will take to repair them.

The operator should keep his operating area clean and orderly. A little housekeeping effort each day will usually be sufficient to maintain a clean area.

10

Preventive maintenance

Good preventive maintenance depends a lot on good inspections.

Take advantage of down time to make repairs. This could save you a shutdown for repairs later.

Some reactions are very corrosive. Watch these areas and replace or repair as often as necessary.

Do not hesitate to call for help if some special technique is necessary, such as special instruments, in order to determine what might be wrong with a piece of equipment.

11

Lubrication

One of the most important duties that the operator has is the lubrication of the equipment in his area. If not watched carefully there is the tendency to assume that the other shift is doing the lubrication, and, as a result, no one does it.

Regardless of who is assigned the lubricating duties, the operator should make sure that the equipment has proper lubrication during his shift.

He should check oil levels, oil pressure, and oil temperatures, and bearing temperatures during his shift.

He should pay close attention to the sound of the equipment operating. Sometimes this will give evidence of poor lubrication.

12

Safety

The thought of safety should ever be present in the operator's mind. Never take shortcuts that might endanger you or one of your fellow employees.

The fertilizer plant operator must always remember that fires and explosions happen every day, and this can happen to him.

He must keep in mind that he is working with chemicals which are toxic, will explode, and will injure him should they come in contact with his body.

He must remember that when repairs are being made quite often the safety of the repair crews is in his hands.

It is up to the operator to see that safety devices are working properly in his area by following instructions in checking them. He should follow safety regulations prescribed for his area and see that others who come into his area do the same.

13

Questions

What is absorption? (It is the process in which one constituent is removed by another.)

Is stripping the opposite of absorption? (Yes)

What is the function of the absorption equipment? (To bring the gas and the liquid into direct contact)

Generally, what happens to the temperature when absorption takes place? (It rises)

When absorption takes place in a vessel being agitated, the temperature rises. True or false? (True)

Is the pressure drop through a bubble-plate tower higher than through a packed tower? (Yes)

Why? (Because the gas has to force its way from under each cap through the pool of liquid on each tray)

What is the main purpose of the spray tower in the fertilizer plants? (For the formation of solid fertilizer particles called "prills")

If the liquid rate for circulating through an absorption tower were low, would you use a packed tower or bubble-plate tower? (Bubble-plate tower)

Why? (Because a low liquid rate probably would not wet the packing in a packed tower)

14

Show slides

The first slide shows a packed tower constructed of brick.

Point out main features of each tower

The second slide shows a bubble-plate tower on a pressure nitric acid unit.

The third slide shows a spray tower.

The fourth slide shows a falling-film type of absorber.

WHAT TO DO	WHAT TO SAY

1

Introduction

Agitators are used in the process industries to produce irregular disturbances or turbulent motion within a fluid. Agitators find widespread use as a means of promoting operations such as:

1. Extraction
2. Mixing
3. Absorption
4. Heat transfer
5. Chemical reactions

2

Agitation in extraction process

Wet-process phosphoric acid may be produced from phosphate rock and sulfuric acid. The almost complete extraction of P_2O_5 from the rock would be impossible without adequate agitation.

In the reactors, agitation keeps the slurry essentially homogeneous. The sulfate concentration is kept low so that complete reaction will occur. With low sulfate concentrations the acid will react with the rock, produce phosphoric acid and gypsum, and the two products go into the liquid phase.

Without agitation there would be areas in the reactor where the sulfate concentration would be zero. Others areas in the reactor would contain extremely high sulfate concentrations. Of course if the metered rates of rock and sulfuric acid are correct, the average sulfate concentration in the vessel will be what is desired.

The results of such an operation would be highly undesirable. In the areas in the reactor containing the high sulfate concentrations, virtually no extraction would occur. The reaction is so rapid that the gypsum formed coats the rock particles. Once the particles are coated with the insoluble gypsum, no further reaction occurs. Therefore, this unextracted rock is lost with the byproduct gypsum.

Another adverse effect of the high sulfate concentration concerns the crystal size of the gypsum. High sulfate concentrations tend to produce an excessive number of small crystals instead of a small number of large crystals. The small crystals are difficult to filter and wash because they can hang in the filter cloth openings and blind the cloth.

Sketch on blackboard

To overcome these difficulties agitators are employed. Most commonly used are the turbine agitators. In the simplest form, the turbine agitator consists of a shaft with straight blades welded to the shaft. The shaft may be rotated at high or low speed. The speed depends on the nature of the material being mixed and on the shape and size of the vessel.

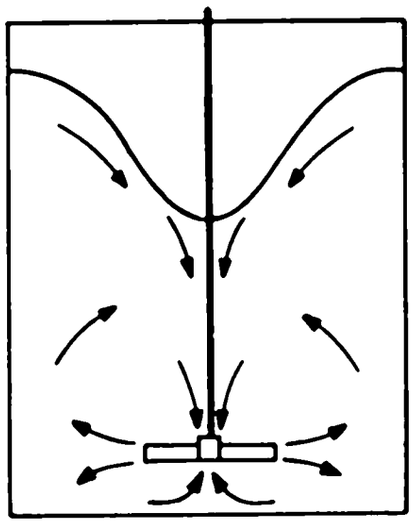

FLOW PATTERNS WITH AN UNBAFFLED TURBINE IMPELLER

A turbine agitator in a tank would produce a pattern in the tank as shown in the sketch:

At the tank wall the fluid moves in a circular motion. To provide additional agitation baffles are fixed to the tank wall producing patterns as below:

Sketch on blackboard

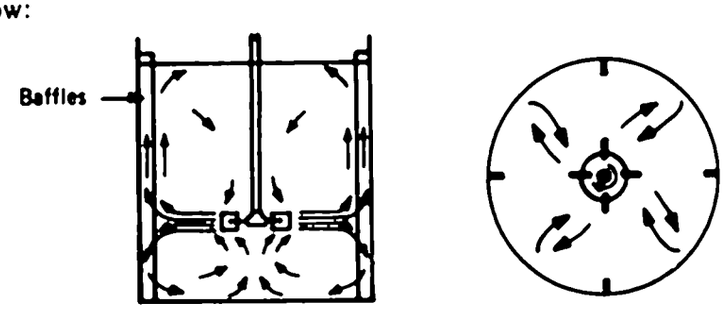

SIDE VIEW BOTTOM VIEW

FLUID FLOW PATTERN FOR TURBINES WITH BAFFLES

3

Agitation in mixing process

The mixing of liquids with solids, solids with solids, or gases with liquids would be most difficult without agitation.

Sketch on blackboard

The mixing of solids requires agitation of the various solids. Mixing may be accomplished in a vessel with paddles or in a pug mill. Solids may be mixed by passing the material through a blending tower. The agitation of the solids is caused by their flow together across and around baffles in the tower.

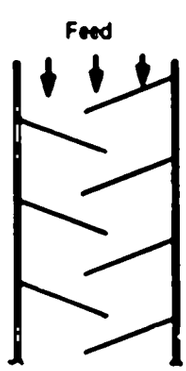

Sketch on blackboard

For mixing two liquids, a pump might provide the desired degree of agitation.

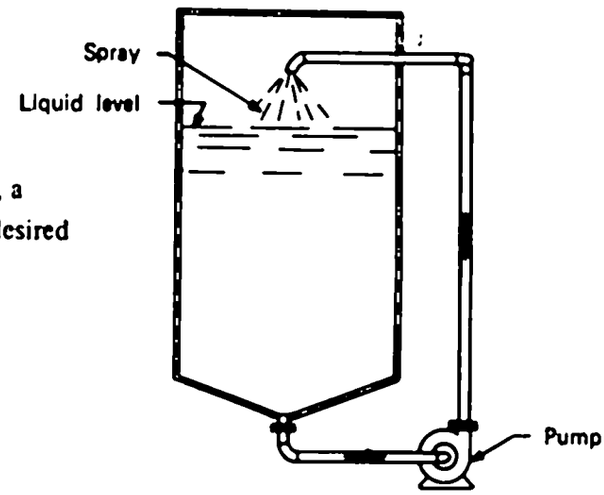

PUMP AGITATION

For liquid of low viscosity, a series of 90° bends in the pipe line are sometimes sufficient.

Sketch on blackboard

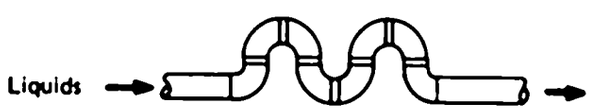

PIPE AGITATION

For mixing gases and liquids, pumps, turbine agitators, and propeller agitators are sometimes used.

4

Agitation in absorption processes

A good example of absorption in fertilizer plants is in removing fertilizer dust from air streams. For this operation, wet scrubbers are often used. The dust-laden air stream is blown through a wet scrubber. In the scrubber the dust is dissolved in the solution as the air is blown through the solution.

The air bubbling through the solution provides agitation to increase the rate at which the fertilizer dust is dissolved. Without agitation, the fertilizer dust would dissolve very slowly leaving the dust in suspension. The suspended matter would have a tendency to settle out and plug up the scrubber.

Sketch on blackboard

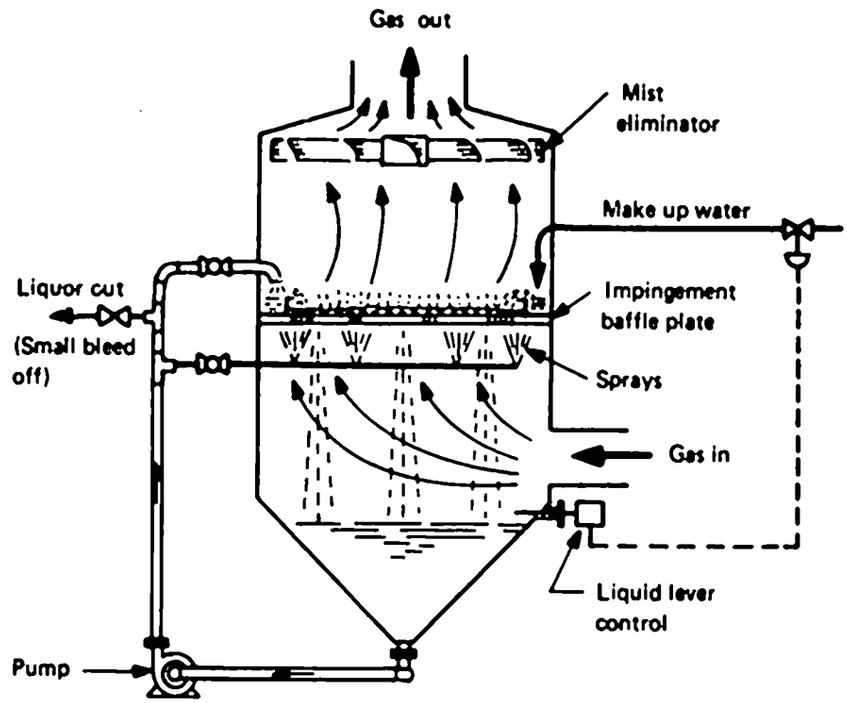

Of course, in wet scrubbers, some of the agitation necessary is provided by recirculating the scrubber solution through pumps.

In many cases absorption is also accompanied by chemical reaction as in the production of nitric acid. The oxides of nitrogen produced in the converter are absorbed in packed towers or bubble cap towers. As the nitrogen oxides are absorbed, they react with the water present to form nitric acid. The unabsorbed gases passing through the liquid provide agitation of the liquid producing a homogeneous liquid on the tray.

5

Agitation in heat transfer

Without agitation the transfer of heat would be seriously affected. By placing a steam coil in a tank of solution very little heat is transferred from the coil to the solution. The liquid next to the coil is heated to the approximate coil temperature. As the liquid approaches the coil temperature, heat transfer decreases as there is no longer any driving force.

Coil in tank

If, however, there is some means of replacing the hot liquid next to the coil with cold liquid, there then will be a driving force for the transfer of more heat. This is the purpose of using an agitator. The agitator continually replaces the heated liquid next to the coil with cooler liquid so that heat will be transferred.

In the case of an open tank, agitation may be provided by a turbine, propeller, air lance, or circulation with a pump.

Shell and tube exchanger

For shell and tube exchangers, the agitation is provided by pumping the liquids through the exchanger at adequate velocities. Particles in liquids flowing at low velocities tend to flow in straight lines parallel to each other and to the pipe wall. This is called Laminar Flow. There is no vertical or horizontal mixing of the liquid in the pipe.

If heat transfer is attempted, with this type flow, only the liquid adjacent to the tube wall is heated. Essentially the same conditions exist here as in the heating coil immersed in the tank without agitation.

By raising the liquid flow rate in the tube above a certain minimum, the nature of the flow is completely changed. No longer do the liquid particles travel in straight lines parallel to the tube wall. Particles now travel in random directions in the tube and the total contents of the tube are completely mixed. The hot layer next to the tube wall is continually being replaced with a cooler layer.

Sufficient agitation for efficient heat transfer then is provided by using a pump of adequate size to stay above the desired minimum velocity. When above this minimum rate, the flow is called "viscous" flow.

Gas - liquid

When transferring heat from a gas stream directly to a liquid stream, the gas may be bubbled through the liquid. The agitation necessary for good heat transfer is provided by bubbling the gas from a distributor, such as a drilled pipe. In general, the smaller the bubbles produced the better the heat transfer. This is because many small bubbles have much more surface area than a few larger bubbles. Heat transfer is dependent on the area of contact.

6

Agitation in chemical reactors

Chemical reactions in liquid or solid phases depend on agitation. To react, two materials must be brought into contact with each other. Nitric acid cannot react with phosphate rock until the two are brought together. If phosphate rock is placed in a beaker and nitric acid is poured into the beaker only the acid in direct contact with the rock will react. The reaction products will then remain in the vicinity of the rock to prevent further contact between acid and rock. If, however, the contents of the beaker are stirred the reaction products are continually washed away so that the rock and acid can again get together.

Only some types of agitators have been mentioned in connection with the various operations discussed. Many other types are available; some are listed below.

7

Horseshoe agitator

The horseshoe mixer is used in "kettles" usually for heavy duty such as grease mixing, cake dough, etc. The agitator element conforms to the container wall and keeps the wall scraped clean.

Sketch on blackboard

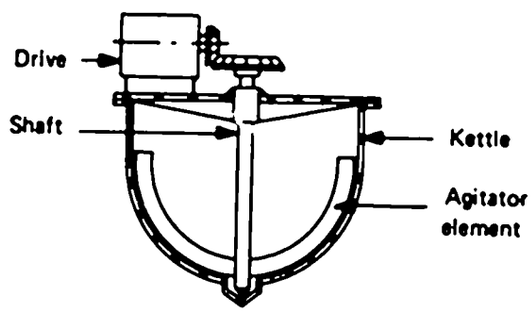

HORSESHOE

Gate agitator

The gate type agitator consists of a shaft with what looks like a gate attached. This type agitator is generally revolved slowly and may be used for mild agitation such as keeping solids in suspension.

Sketch on blackboard

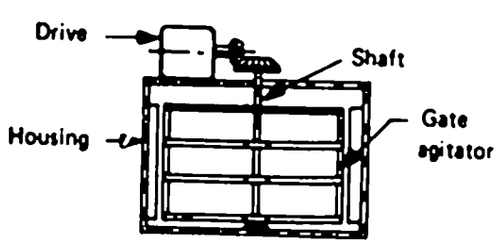

GATE

Pan mixer

Pan mixers consist of a rotating pan and rotating plows. The plows continually turn the solids over and mix them. It is good for mixing dry powders or granular solids.

Sketch on blackboard

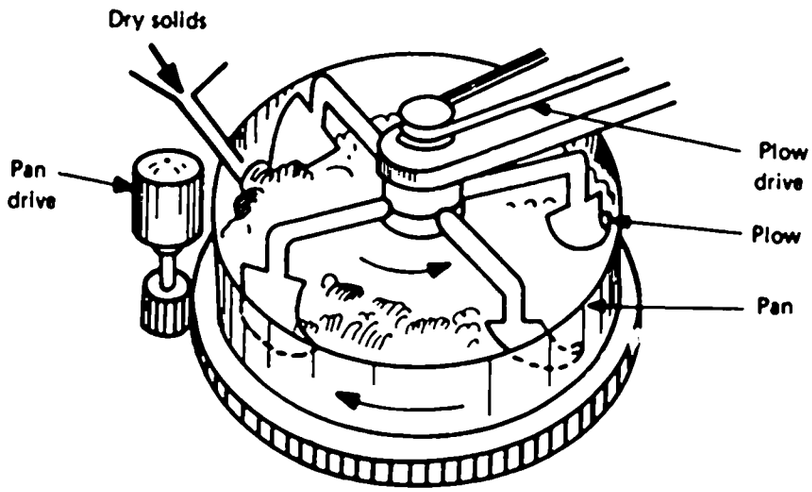

8

Turbine and propeller agitators

Of the various agitators mentioned the most commonly found ones are the propeller or turbine agitators.

The turbine agitators may have blades which are straight, angled, backswept or shrouded.

Sketch on blackboard

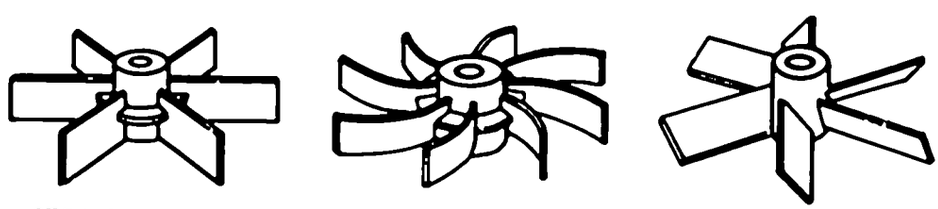

STRAIGHT BLADE CURVED BLADE PITCHED BLADE

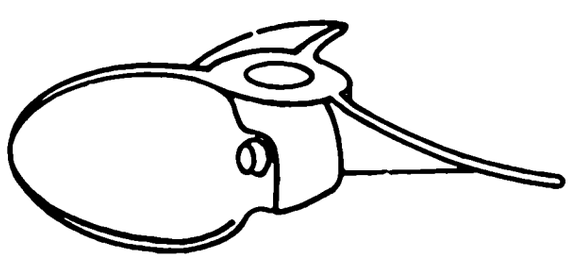

PROPELLER

Due to its simplicity and ease of construction, the straight-bladed turbine is the most common.

Agitator operation

Agitators may be provided with ampmeters to determine the consistency of the material being mixed by observing the load on the agitator motor, one can sometimes tell if the level in the vessel is above or below the agitator. If the impeller should come loose from the shaft the motor loading will drop.

If the blades become bent, excessive vibration may cause damage to the motor and speed reducer.

When using a sparger for agitation observance of pressure change in the sparger will tell you when one sparger is stopped up.

For movable propeller-type agitators the agitator can be moved within the vessel for best mixing.

An agitator motor should be kept clean to prevent overheating.

Agitator shafts and blades should be frequently checked for both erosion and corrosion.

Lumps or buildup on the agitator can cause unbalance, seriously damaging equipment.

Starting an agitator in an over-filled tank can cause spillage.

Starting an agitator in a cake of solids can break the agitator or burn up the motor.

Changes in process conditions can indicate a loss of agitation. When using a pump for agitation, stoppage in the line will lower the degree of agitation. Loss of agitation when using a sparger may indicate corrosion of the sparger holes.

When pumping from an agitated tank containing solids, stoppage in the pump suction line may indicate loss of agitation in the tank.

When using temporary spargers, it may be best to remove them from a vessel before cutting them off to avoid plugging.

Buildup on pan mixers may indicate the scraper blades need replacing.

Permanent spargers that enter the tops of tanks should have bleed-off valves where there is a possibility of backing material up in the line and stopping it up.

10

Preventive maintenance

The equipment should be kept well lubricated. Oil levels in speed reducers should be maintained.

If mechanical seals are used on pressure vessels they should be adequately lubricated.

Checking the agitator impellers for tightness on the shaft can prevent serious damage to the equipment.

Noisy bearings on motors or speed reducers indicate a need for repair to prevent equipment damage.

11

Safety

Prior to entering a vessel with an agitator, the agitator switch should be pulled and a hold tag placed on the switch.

Avoid wearing loose clothing near an agitator shaft that is moving. Shaft keys can rip off clothing or cause serious accidents.

In open tanks, care should be taken to avoid splashing when the tank level is being raised or lowered. Impellers near the liquid surface can cause serious splashing.

Never rod into a tank with a moving agitator.

Watch for buildup of solids on tank walls. Solids may completely fill the space between baffles. This will lower the degree of mixing in the tank. It may be necessary to dig out the solids.

Steam or air spargers in tanks with agitators can hang in the blades if moved about. Temporary sparges should be fixed in the tank.

12

Questions

In heat transfer operations, why is agitation necessary? (To replace the hot layer of material next to the coil with cooler material)

In reacting chemicals why is it best to agitate the mixture? (Increase the speed and efficiency of the reaction)

Why should agitator motors be kept clean? (Prevent overheating)

If an ampmeter on an agitator suddenly drops, what could this indicate? [(1) Shaft broken, (2) Impeller loose on shaft, (3) Speed reducer damaged, (4) Tank level below impeller, (5) Ampmeter bad]

If agitator ampmeter fluctuates wildly, what could this indicate? [(1) Motor damages, (2) Speed reducer damaged, (3) Buildup on shaft or impeller causing imbalance, (4) Bent shaft or blades, (5) Buildup in tank being struck by agitator]

What are the most common types of agitators? (Turbines and propellers)

In baffled tanks, why should solids between the baffles be removed? (Better agitation)

A pressure drop in a gas sparger may indicate what conditions? (Enlargement of the outlet holes due to corrosion)

A pressure increase in a gas sparger may indicate what condition? (Plugging of the sparger holes)

13

Slides

This slide shows a turbine agitator used in production of ammonium polyphosphate.

This shows a pumping arrangement used to agitate solution in a storage tank.

This is a lighting mixer. It is a small portable agitator used for many mixing jobs.

WHAT TO DO	WHAT TO SAY

1

Introduction

Overhead cranes are used to lift and move solid materials, supplies, and equipment from one location to another.

Their most frequent use in fertilizer plants are the unloading of raw materials to process, the moving or loading of solid intermediates and solid by-products in the process, and the moving or loading of solid fertilizers for storage or shipment. In each of these instances a clamshell bucket is used on the overhead crane to perform the job required.

Cranes are also frequently used to move equipment to allow repairs to be made and to move supplies to the point of use. Usually the clamshell bucket is replaced by a hook for these jobs. In a few instances magnets are used instead of hooks.

2

Overhead cranes are classified in numerous ways and are of several types. One way is by use–continuous, intermittent, or occasional.

Another is whether they are stationary or traveling. If traveling, they may have stationary or traversing lifting mechanisms.

Still another way to classify is by their speed of travel or by their ruggedness of construction. Probably the most common classification is by lifting capacity and span.

3

They come in many sizes and perform many functions, but most are made of the same basic components:

List on blackboard

1. Rails to support the crane and usually to allow movement.
2. A power supply to the moving crane.
3. A crane bridge to span the area to be serviced and to support the lifting mechanism.
4. Controls to allow operation of the crane.
5. Devices to move the crane and to hoist the load.

4

Rails

Rails similar to railroad rails are provided on opposite sides of the area to be served to allow movement of the crane. These rails must have sufficient support to hold up the crane and its load and must be level to allow easy movement of the crane.

The travel of the crane is parallel to the rails and for the full length of the rails. Thus, placement of the rails determines the area to be serviced.

5

Power supply

Supplying electric power to the crane in many cases is one of the difficult problems of crane design and one of the most frequent sources of needed maintenance.

This is a problem because many cranes move over a large area at a rapid rate. Power is normally supplied in one of two ways.

In one method, stationary rails or cables extended the full length of the crane travel, are energized with electricity (a "hot" rail).

Contactors are then mounted on the traveling part of the crane. As the crane moves these contactors slide or roll along the hot rail and the electricity flows through the contactors to electric wiring on the moving part of the crane.

Sketch on blackboard

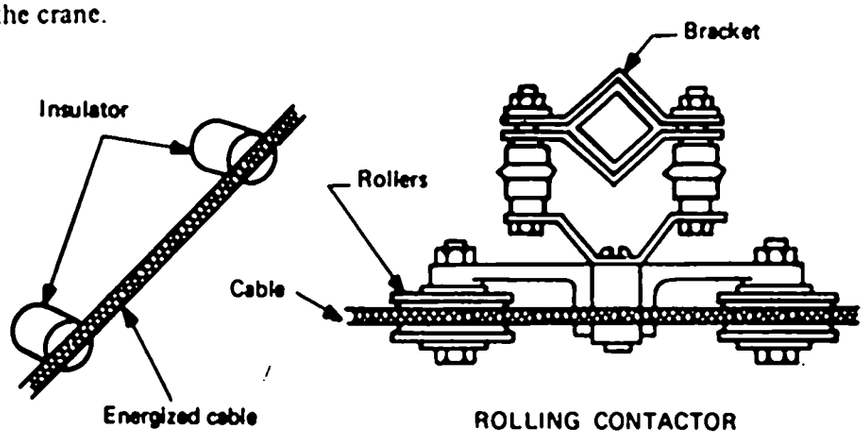

ROLLING CONTACTOR

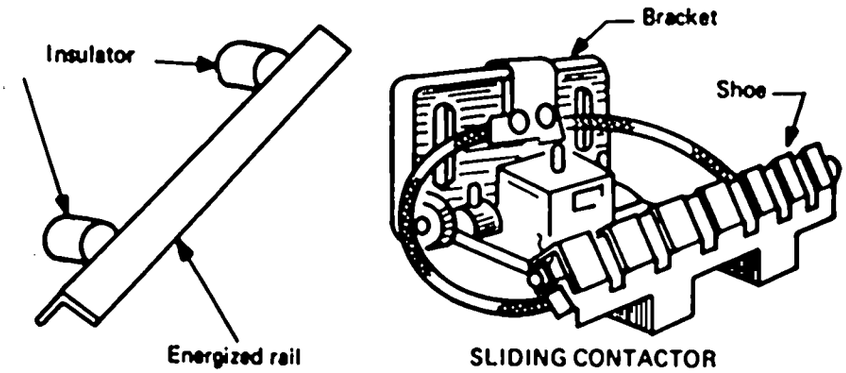

SLIDING CONTACTOR

The second method is a long supply cable attached to the moving part of the crane to supply power.

Attachments to take up or let out loops of this supply cable as the crane moves keep the long cable from hanging free and becoming a nuisance and source of danger.

Sketch on blackboard

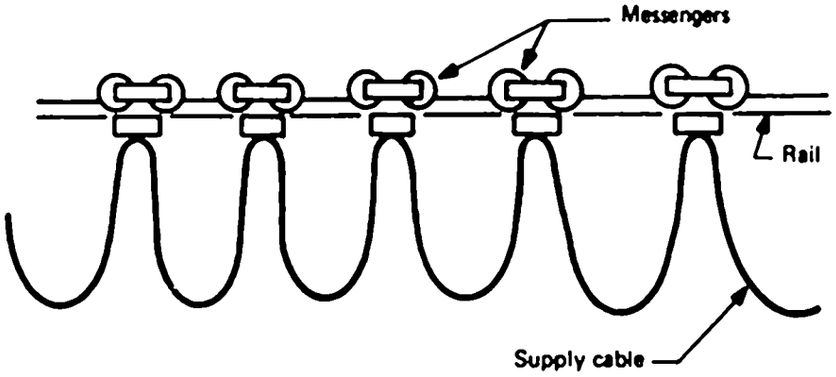

6

A similar problem exists in transferring power to the hoisting mechanism when this mechanism also travels.

In many cases movement of the hoisting mechanism is perpendicular to the movement of the crane. The same two methods are used to transfer power to the hoist mechanism as are used to supply the crane with power.

7

Bridge

The crane bridge can span widths of as little as a few feet or widths of more than 100 feet. This bridge must support all moving parts of the crane and the load.

Sketch on blackboard

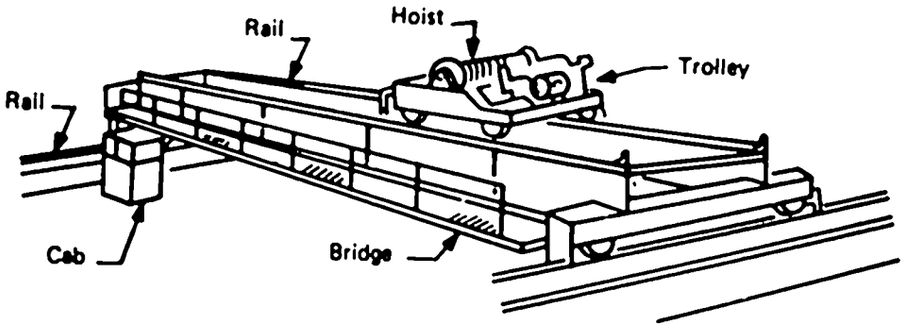

Wheels are attached to the bridge to allow it to roll on the crane rails. These wheels are similar to the wheels on railroad cars.

The wheels can be straight or tapered; tapered wheels have the advantage of keeping the crane bridge squared with the rails.

8

Frequently there are rails on the crane bridge to allow the lifting mechanism to traverse back and forth across the bridge. This movement gives much more complete coverage of the area being serviced.

9

Controls

Controls are for all movements of the crane and for the lifting and lowering of the load.

Normal control is maintained by regulating the speed of the motors driving the crane and of the motors lifting the load. However, brakes are provided on both systems to give more complete control when it is necessary to use them.

10

Frequently an enclosure (cab) for the operator and his controls is provided on the crane bridge. In this case, the operator moves with the crane.

These cabs can be heated and air conditioned to make them quite comfortable even in difficult working conditions. Of course, this also serves the purpose of protecting the operator from fumes and dust.

Sometimes radio communication is provided in the cab so that the operator can receive and give instructions.

11

Crane movement

Separate motors are used for crane movement and for lifting the load. The crane movement is provided by a drive shaft that connects a motor to some of the wheels (drive wheels), usually through a chain of gears in a speed reducer.

The shafts or axles through the drive wheels are more likely to break and cause a maintenance problem than the shafts or axles in the idler wheels that support the rest of the bridge.

When the hoisting mechanism has traverse motion, a separate motor provides power in an arrangement similar to the one just described for movement of the crane.

12

The load-lifting motors supply power to rotate drums that have steel cables attached. These cables wind around the rotating drums to raise or to lower the load.

Usually there are two drums and the cable will be fully wound on one drum when the load is in the up position. The reverse is true and the cable will be wound around the other drum when in the down position.

Normal drum design is to have a maximum of one layer of cable on a fully wound drum.

13

Sketch on blackboard

Clamsheel buckets are the most frequently used load-lifting device in fertilizer plants.

Cable arrangements allow the operator to open and close these buckets to allow picking up or discharging the load.

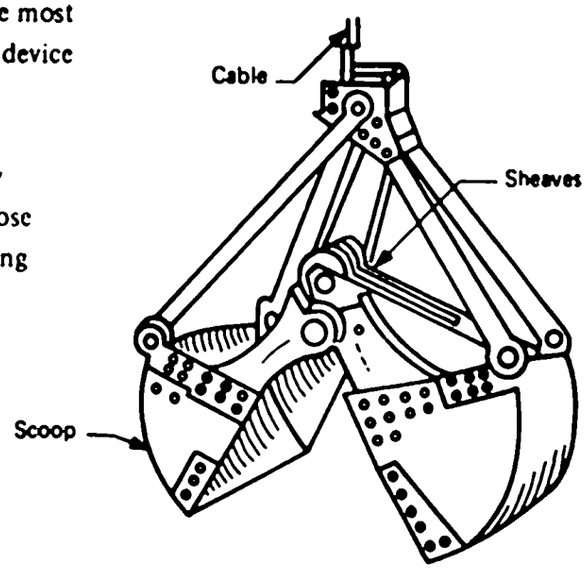

CLAMSHELL BUCKET

Hooks, slings, magnets, and other devices are used less frequently than clamshells in fertilizer plants.

14

Operating duties

The measure of a good overhead crane operator is the amount of material he can move safely without damaging his equipment.

Stress this

A characteristic of a good operator is a smooth uniform movement of the crane while doing the job. Jerks and jolts and excessive use of the brakes are indications of an inexperienced or a bad operaotr.

The operator should continually think ahead to anticipate what action will be needed next and develop his technique to give smooth operation with a minimum of lost motion.

Stress this

This is particularly true in cranes that traverse the bridge. The operator can save much valuable time if he traverses the hoist to where it will be needed next while the crane is traveling.

Another characteristic of a good operator is the development of his technique to where he can use a clamshell bucket to pick up solid materials within a few inches of the floor without bumping or damaging the floor.

Put on blackboard

The operator must always be alert to avoid striking other equipment, bins, and building supports with the crane bucket or hook.

Control of the load, particularly when the load is being lowered, is very important to avoid losing or dropping the load.

He also avoids dropping the bucket into a pile and then continuing the lowering operation. This will result in tangled cables.

Smooth operation–or avoiding fast acceleration or deceleration and swinging loads–will reduce the maintenance required for the crane.

Unnecessary rapid braking not only wears out the brakes, but also causes flat places on the wheels. These flat wheels jar the whole crane and cause unnecessary maintenance.

15

It is essential that the crane operator be thoroughly familiar with the materials he is to handle. Lack of this knowledge can result in mixing of valuable materials, storage in the wrong area or loading of the wrong material.

Crane operators must be sure they understand and confirm instructions to avoid such mistakes.

The operator's skill in storing and removing granular fertilizer has much to do with the uniformity of the fertilizer quality. If the operator stores the

material in a cone-shaped pile, all of the fine fertilizer will be in the middle of the pile and all of the large granules will be on the outer edges of the pile.

Such undesirable segregation can be prevented by scattering the fertilizer over the entire area available and building the pile in layers instead of pouring on the peak of a cone. This not only keeps the different size fertilizers uniformily mixed, it also averages out variations in the chemical grade of fertilizers made during the time that the pile of fertilizer was produced.

It is just as important to remove the fertilizer by digging all the way from the top of the pile to the floor and expanding this hole. Removing the fertilizer in this manner cuts through the layers built during proper storage and will give the most uniform size and chemical analysis of the fertilizers shipped.

16

Swinging buckets are caused by starting the crane in motion before the bucket is clear of the pile. Such swings should be avoided since they cause unnecessary strains on the crane.

An occasional swing happens to most operators and can be stopped by traveling the crane in the direction the bucket is swinging.

The upper hoist limit switch is a safety device that keeps the bucket from being raised into the crane bridge and drums. It should not be used routinely to stop the lift.

When discharging fertilizers from the bucket, severe dusting can be avoided by lowering the bucket close to the pile or hopper that is receiving the fertilizer.

17

Daily duties

Where spillage is a problem, and it usually is, the operator should clean the lips of the crane bucket each shift to keep from dribbling material as the crane moves.

Beveling the lips of the bucket to give a sharp closing edge has been found to reduce dribble from the bucket.

Important

The operator can further reduce spillage by hesitating a brief period after closing and raising the bucket to allow excess material to fall from the bucket. Incidentally this also prevents bucket swings.

At the same time he cleans the bucket, the operator should inspect the cables for wear at the points of connection with the bucket.

During the shift the operator should always be attentive for unusual noises or unusual jerks and bumps as he operates his crane. Any excessive sparking from the electric supply cables or contactors should be observed.

These are indicators of something wrong with the crane and should be corrected or reported to his supervisor.

18

Occasional duties

Once per month the operator should either have checked or check the crane rails for any misalignment of rails, chipped or broken places (wheels also), and loosening of the bolts holding the rail.

Particular attention should be paid during seasonal weather changes since temperature differentials can make considerable differences in long lengths of rail.

Some rails are designed to "float" to allow for expansion and contraction.

During the monthly inspection, the crane stops on the ends of the rails should be checked to make sure they are undamaged. The full length of the lifting cables should be inspected.

19

At the end of the shift, or at any time the crane is parked, the bucket should be lowered to the floor.

Put on blackboard

A good operator leaves his job in such a shape that the on-coming shift is not behind when it starts.

20

Preventive maintenance

Following the lubrications schedules on overhead cranes is very important. Since most cranes are in almost continuous motion and since the cranes

usually represent a large cash investment, it is risky not to follow these schedules.

Every six months qualified structual people should inspect the crane bridge and the rail supports to insure there are no defects.

It is advisable to have electrical people make a thorough inspection of all electrical equipment on the crane bridge once a year.

They should inspect sliding or rolling contactors weekly to allow them to be replaced before they are worn excessively.

21

Safety

The crane operator has a safety responsibility to his fellow workers that is greater than most employees.

Important

He must at all times be certain as to the location of other people in the area, since the load he is carrying or releasing can be fatal if it strikes or covers another employee in the work area.

In many cases the operator must climb to gain access to the crane. Climbing is always hazardous and the operator must be alert and conscious of the dangers involved when he climbs.

The installation of a cable on the building steel about four feet above one of the rails for the full length of the rail is a good safety feature.

Sketch on blackboard

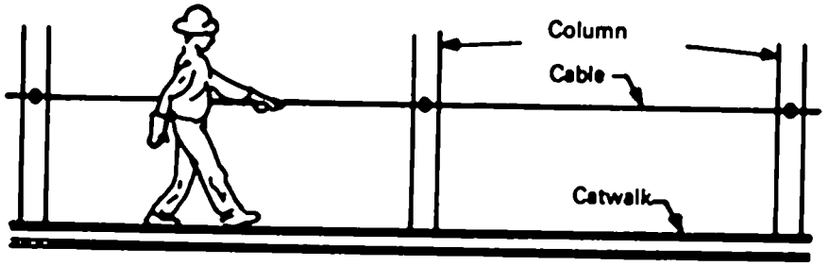

Should the crane quit operating the operator uses this cable as a hand rail while "walking the rail" to get help.

The "hot rails" on cranes are exposed high voltage current carriers and no one except qualified electrical people should be allowed in an area where they might come into contact with them.

Loose material should not be allowed on the crane when it is in use.

Pull the main electrical switch and place a hold tag when cleaning or maintaining the crane.

22

Questions

1. What is the major functions of an overhead crane? (Lift and move loads)

2. How is the electric power supplied to the moving crane? (Sliding contactors or looped cables)

3. What is the support span of the crane called? (Bridge)

4. What is the most frequently used lifting device for granular solids? (Clamshell bucket)

5. What is frequently used to lift supplies? (Hook)

6. Does frequent use of the brakes on the crane indicate a good operator? (No)

7. A good operator should be able to lower his bucket within inches of the floor without bumping the floor. (True)

8. The crane operator has more or less responsibility for the safety of fellow workers than most employees? (More)

9. How should stockpiles be built when storing granular fertilizers? (In layers)

10. Why should cone-shaped piles of granular fertilizer be avoided? (To avoid segregation of different size particles)

11. How can you prevent dribble from a clamshell bucket? (Hesitate after lifting the load and keep the bucket lips clean)

12. When dumping fertilizer into a loading hopper should the bucket be held high or low? (Low) Why? (To avoid dusting)

13. Where should the crane bucket be positioned when the operator leaves the crane? (Resting on floor)

14. What is the purpose of the hoist limit switch? (Keep the bucket out of the bridge and drums)

15. What causes the load to swing? (Moving the crane with the bucket still in the pile or rapid acceleration)

23

Slides

The first slide is an overhead crane using a clamshell bucket to handle granular fertilizer.

This slide shows a crane using a hook to handle equipment–an electrode to be placed in an electric furnace. Notice the safety hazard caused by people working in the area.

The third and fourth slides show the same crane a few seconds later. Note the hoisting mechanism (bucket) has traversed along the crane bridge.

WHAT TO DO	WHAT TO SAY

1

Introduction

Instruments and control systems have proven so useful to operations that almost all fertilizer plants use them extensively. They serve three basic functions:

Put on blackboard

1. Provide the operator with more information than he would have without them.
2. Make it easier for the operator to do his job (i.e. he can close a valve from the control room that he would otherwise have to walk 100 feet and climb four flights of stairs to close).
3. Makes it possible for an operator to do more. This, of course, means that fewer operators are required to run a plant.

2

Instruments represent a costly investment in most fertilizer plants. They also represent a rapidly changing science. New instrument developments continue to occur frequently.

Instrument complexity is illustrated by the use of radioactive source materials in some prime measuring elements in fertilizer plants. Some such applications can even measure the amount of crystals present in a flowing liquid-crystal slurry.

Such complexity is enough to frighten most operators during their initial studies of instruments and instrument systems. Fortunately, we in operations have long since discovered that we can control and use machinery and equipment–even though we do not totally understand the principles that make them work.

Of course we have also found that the more we do understand about this equipment and machinery the better we can make it produce for us.

Operators are usually quite relieved when they find out that most instruments are used in the same simple basic instrument system. This makes it much easier to study and to understand instruments.

3

Important

The basic instrument system is made up of the following parts:

1. A primary element capable of measuring some variation in the process.
2. A transmitter that takes the signal from the primary element, converts it to a stronger signal, and sends the signal to where it is used.
3. An indicator or recorder which converts the signal to useful information for the operator of for other instruments.
4. A controller that determines what adjustments are needed to maintain the process conditions that the operator sets.
5. A control device that actually changes the process condition as directed by the controller (in many cases this is a valve).

This basic instrument system (or parts of it) is repeated many times in the modern fertilizer plant. Very few instrument systems are more complex than this basic system.

In this chapter we will study the five parts of the basic instrument system. We will go into considerable detail about primary measuring elements and the process variables that they measure.

4

Primary elements

The most common process variables to be measured by primary elements are pressure, temperature, flow, and level.

Some other process variable measured are pH, specific gravity, slurry densities, and mechanical vibration.

5

Pressure

The most basic and one of the most accurate means of measuring low pressure is the manometer. U-tube manometers are widely used where only local indications of pressure are needed or where infrequent pressure checks are needed (to determine where a line stoppage is located is an example).

Sketch on blackboard

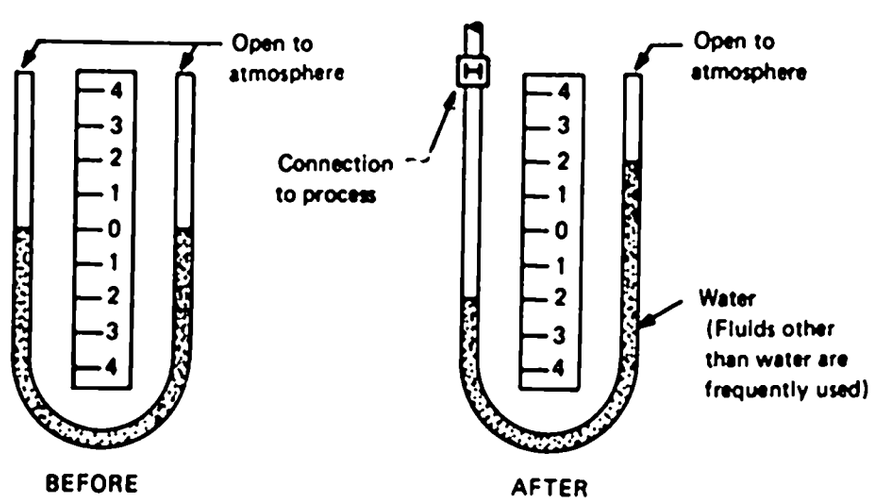

Study of the sketch shows that the process pressure is used to support a column of liquid whose height is proportional to the pressure applied. The column of water is something an operator can read and compare to the desired process operating pressure. In the sketch the process pressure equals four inches of water.

A second type manometer is frequently used by instrument people to check or calibrate other instruments. This is a reservoir manometer.

Sketch on blackboard

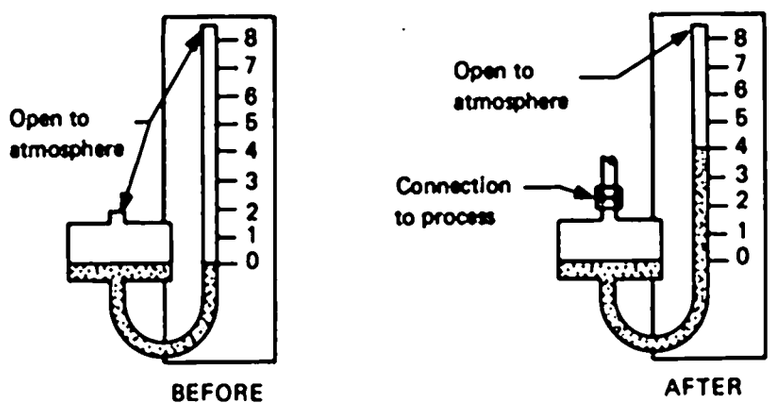

Point out less chance of error

The reservoir manometer is designed so that a small change in the level of the large reservoir results in a large change in the tube. This principle allows a direct reading from the scale instead of making two readings and adding them together as is done with the U-tube manometer.

Other types of pressure measuring devices are more satisfactory when signals are to be transmitted; the Bourdon tube is the one most frequently used. Pressure gages using Bourdon tubes are the most frequently used device for reading high pressures.

Sketch on blackboard

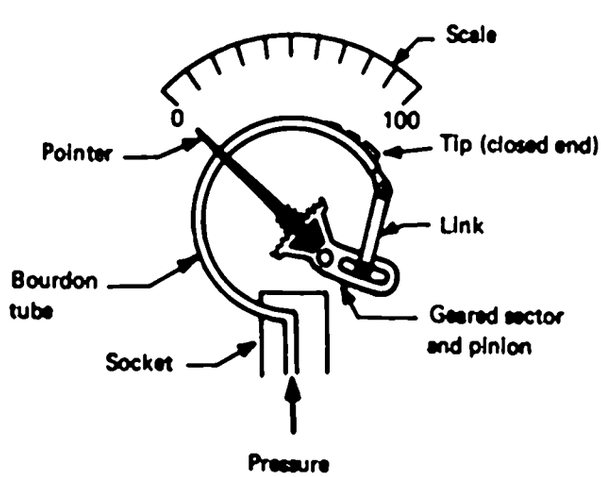

The tip of the Bourdon tube acts as a spring when pressure is applied. As the tip attempts to straighten it moves a pointer (as on most of the pressure

gages we see in the plant) or activates a transmitter to send a signal to remote locations.

Pressure is expressed in many ways and the good operator must be able to relate these different expressions to each other. The following table is useful for this purpose.

1 atmosphere = 14.7 pounds per square inch
1 atmosphere = 760 mm of mercury
1 atmosphere = 29.92 inches of mercury
1 pound per sq. in. = 27.7 inches of water

6

Temperature

The most common device for measuring temperature is the familiar glass thermometer. It has a capillary that is calibrated to indicate temperature when a column of mercury rises in the capillary.

Such thermometers are widely used in fertilizer plants but not in instrument systems. They (like the manometer) cannot transmit a signal.

A variation of the glass thermometer is usually used to transmit temperatures to control devices. This variation is a gas-filled thermometer. Changes in pressure of the gas trapped in the thermometer are directly proportional to changes in the process temperature.

Sketch on blackboard

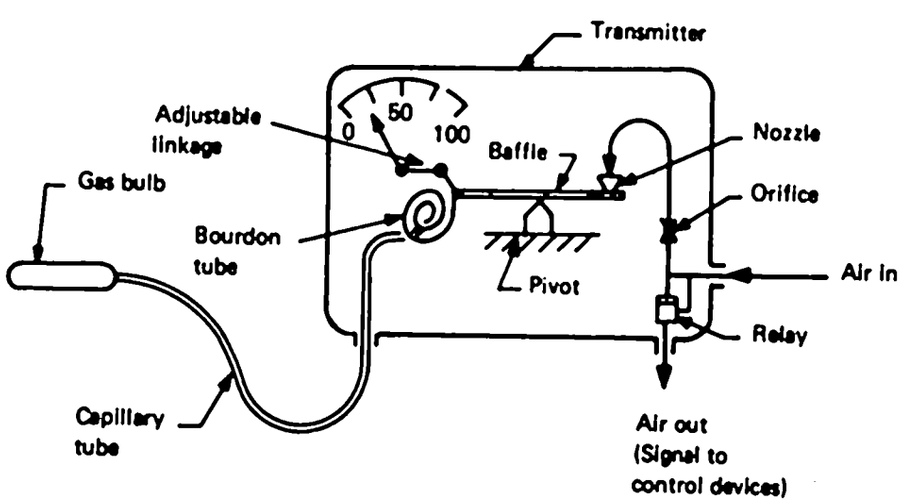

The principle that a small electric current flow will result from heating two different metals that are connected together is widely used to measure temperatures in fertilizer plants. Such devices are called thermocouples.

Sketch on blackboard

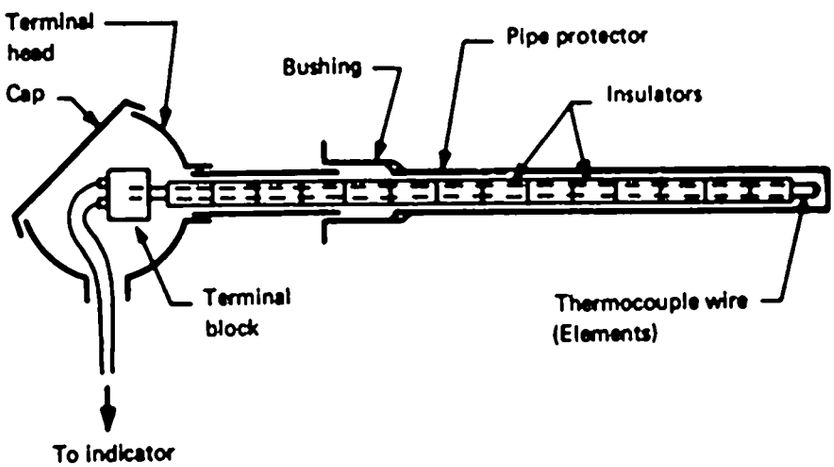

Optical pyrometers, contact pyrometers, and other sophisticated instruments are used on occasions to measure process temperatures. Use of these devices is not yet widespread in fertilizer plants.

7

Flows

Flow is another process variable that is frequently measured. A rotameter is one of the basic flow measuring devices and has wide usage.

Sketch on blackboard

The rotameter has a tapered glass tube through which the medium (liquid or gas) being measured flows. This flow supports a weighted float.

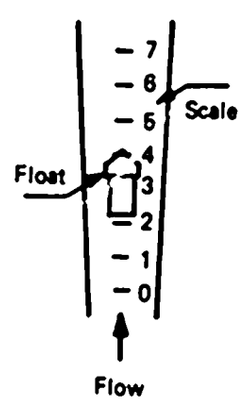

Various positions of the float in the tube are calibrated to indicate different flows.

Caution

(A correction factor must be applied when the gravity or the flowing fluid is different from the fluid used for the calibration. This is also true of other flow measuring devices.)

Orifices are another common primary element for measuring process flows. They consist of a thin plate inserted between flanges in a pipe. The plate has a precision hole cut in its center. This hole is considerably smaller than the inner diameter of the pipe.

Sketch on blackboard

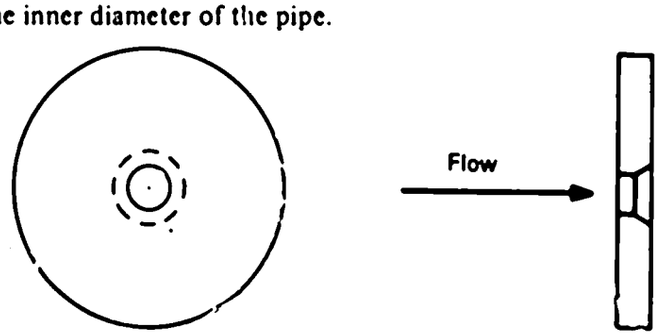

The pressure drop that results when the medium flows through the orifice hole can be calibrated to indicate the existing flow.

Not used on gases

Magnetic flow meters have recently become widely used in the fertilizer industry, particularly for measuring acid flows.

These flow meters are somewhat similar to thermocouples. The small electric current that passes from one electrode to another through the flowing medium also can be calibrated to indicate a known flow.

Other flow measuring devices–such as weir plates, venturi tubes, pitot tubes, and turbine meters–are used to a lesser extent than rotameters, orifices, and magnetic flow meters.

Measurement of the flow of a solid is usually done with a weighing device. These were discussed in detail in chapter 5.

8

Levels

Level measurements are made of both liquids and solids, with liquid levels being the most common.

A sight glass is probably the simplest device to indicate liquid level. This is simply a glass tube or glass plate which lets the operator see the level.

Floats are probably the next most common primary element for measuring liquid levels. If a signal is to be transmitted, the floats are frequently relatively long, heavy cylinders. The buoyancy force exerted as the float is submerged is actually measured instead of measuring movement of the float.

Of course, there are many plant uses where the float does move with the liquid level and does pull a pointer on a calibrated board or raises (or lowers) a rod to show level changes. Such uses are normally for local indicators, not for transmitted signals.

Sketch on blackboard

Purged dip tubes are widely accepted for measuring liquid levels.

The pressure exerted on the column of air in the dip tube is proportional to the liquid level above the end of the dip tube and also to the density of the liquid.

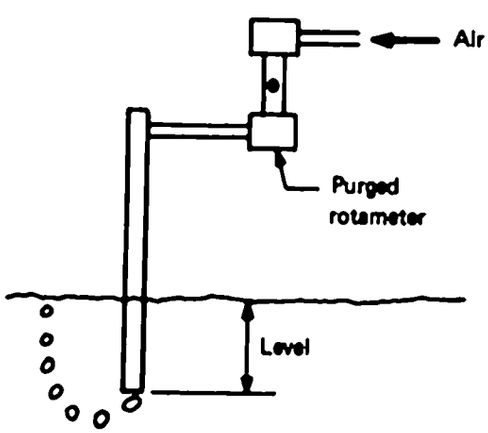

Adaptations are available to allow the use of dip tubes when the tank is under pressure or when the fluid being measured is highly corrosive.

Diaphragm-type pressure transmitters are becoming widely accepted. They use the same principle as dip tubes–the force exerted by the height of the liquid.

Solid levels are commonly measured by rotating paddles. The increased resistance caused by the paddle hitting the solid material is used to indicate when the solids level is up to the paddle. These devices cannot indicate actual level, but can tell when the level reaches one point.

9

pH and specific gravity

As with thermocouples and magnetic flow meters, pH instruments are based on the flow of a small current of electricity through the solution being measured. The electrodes used in these instruments are very fragile and must be protected from rough handling or temperatures beyond their normal operating range.

pH can be thought of as an arbitrary scale that is used to indicate whether a solution is acid or base.

Put on blackboard

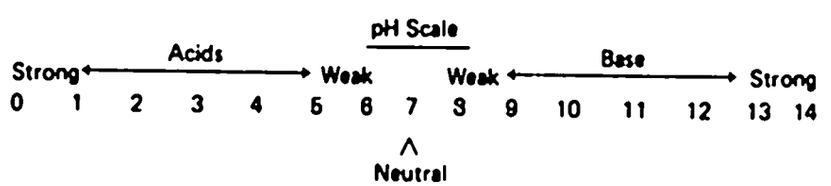

Litmus paper or specially prepared indicator tapes are also frequently used to determine pH in the plant. Instruments are usually more accurate than this tape.

Specific gravity is an expression of the density of the fluid being measured compared to the density of water at 4° C. It is frequently measured with a hydrometer by the operator.

Instruments that work on the same principle as purged dip tubes used for level measurements can also be used to measure specific gravity.

10

Transmitters Important

The second part of the basic instrument system is the transmitter. This is an important part of the system since it makes remote operation possible.

The primary measuring element seldom gives a signal strong enough to transmit more than a short distance. Transmitters take the weak signals from the primary elements and convert them to a strong signal that can be transmitted over a distance.

Transmitters normally have either an electric or a pneumatic output signal. Occasionally transmitters with hydraulic output signals are used.

11

Indicators and recorders

Operators are vitally concerned with indicators and recorders since this is the part of the basic instrument system that tells him what is going on.

Indicators may be located close (local) to the primary element or at a distance (remote) such as in the control room. In many instances both local and remote indicators are provided.

Smooth lines mean good operation

A recorder has several advantages over an indicator. It makes a permanent record that can be reviewed at a later date, it gives an operaotr an indication of the way his shift has run simply by glancing at the recording charts, and it reduces the number of readings that an operator is required to log.

12

Controllers

Controllers are the part of the basic instrument system that save the operator work. They allow him to take actions (such as closing a valve) from a distance.

It has become commonplace in fertilizer plants for the controller to do much more than allow the operator to take remote action. In most cases the operator sets a desired control value and the controller compares the actual instrument reading to the desired reading and automatically takes action to bring the two together.

Alarms (either noise or light) are frequently used to alert the operator when controllers are having difficulties maintaining the conditions the operator has set.

13

Control devices

The control device is the last part of the basic instrument system. It is the device that actually makes an adjustment to change the process variable being controlled.

Control valves are by far the most common such device in fertilizer plants. However, there are many others–variable speed motors, motor-driven gates, damper position controls, feeder controls, vibrators or shakers, ect.

In present day fertilizer plants there are a few instances of instrument systems more complex than the basic instrument system. One is where two feeds to the same vessel are ratioed; another is where an acid temperature and gravity are measured and converted by instruments to pounds per minute of fluid.

Most present day systems are covered by the basic instrument system. Even the more complex systems are only variations of this system.

Of course, there are many instances where only a part of the basic system is used. Any primary element with only a local indicator is an example of such a partial system.

14

Operating duties

There are two basic truths that all operators must accept about instruments.

First, an instrument can only do what it is instructed to do. If it is doing this, there is no reason to call in instrument technician, even though you are not getting the desired results.

An illustration of this is when a basic instrument system controls the supply of water to a cooler. If the control valve for the water supply is wide open and the cooler still is not cooling enough, the instrument has done its job or all it can do. (Frequently, the instrument technician is called before the valve position is checked.) The operator must look elsewhere to correct the problem. Possibly the water supply pump has stopped running or the water line has broken.

The second truth is that instruments *are not* infallible. False readings or bad control are possible when the instrument needs repairs or adjustment. Because of this possibility, the good operator cross-checks an instrument that gives a reading that is suspect.

1. He looks in a tank to check when the instrument indicates a level and yet he is pumping no fluid.
2. He looks at other nearby temperatures when one temperature seems suspicious.

3. He looks to see if there is a flow if an instrument shows flow after a hand valve has been closed in the line.

15

Protecting his instruments is a duty of the operator. Illustrations are:

1. Shield parts of the instrument system (particularly the transmitters) from acid or other solution leaks.

2. Provide a non-freezing fluid or heat for manometers exposed to freezing temperatures. (The glass tube will break if the liquid freezes.)

3. Be careful not to damage primary elements when cleaning equipment. Capillary tubes on gas-filled thermometers can be crimped and cause a failure; dip tubes can be broken or bent; glass covers on pressure gages and sight glasses are easily broken, etc.

4. Clean dials on indicators and recorders so they can be read easily.

5. Do not use high pressure steam in a line that has magnetic flow meters. The teflon sleeve in the meter will fail.

6. Do not allow the limits of a temperature or pressure indicator to be exceeded greatly or it will fail.

Very important-emphasize

7. Handle recorder pins with care—they are easily damaged.

8. Keep the instrument air dryer working. Wet or oily instrument air has fouled many instruments.

Important

9. Keep control rooms pressurized and dust-free to protect the sensitive exposed parts of controllers and recorders.

10. Keep purge rotameters properly set (3/4 open) on primary elements that use a purge flow.

11. Plastic sacks frequently are placed over transmitters and other instrument parts exposed to corrosive atmosphere. These sacks must be kept intact and in place to do any good.

16

The good operator makes other instrument checks. He checks the instrument when it is not in use to see if it returns to zero. Instrument technicians can adjust the zero setting and save many errors if alerted by the operator.

He checks the instrument air supply to instrument locations in the plant to see that the desired pressure is maintained.

He occasionally checks the indicated valve opening at the valve to see that it is the same as indicated in the control room.

He occasionally checks local indicators to see if they read the same as the recorder or indicator in the control room.

Once per shift he will check alarm lights and horns to see that they are functioning (operators are not always provided a means to do this).

He changes recording charts on schedule, marks time indications and dates on charts, and keeps recorder pins well inked.

He closes hand valves when taking a process system out of service because he knows that control valves often do not give a positive shutoff.

He also checks his valve alighnment before trying to control his system with instruments, since he knows that the instrument will not function if block valves are closed.

Use an instrument chart and teach how to read

He uses proper conversion factors when reading instruments and records the actual readings as they are, not as he wishes they were. False readings help no one. An operator must know how to read the lines between the figures on indicators and charts.

He knows how to recognize the difference between an instrument that indicates zero and one that is over ranged (or wrapped around the peg).

Important

Probably most important of all the control board operator stays alert and continually observes control board readings. A good operator can spot and prevent trouble when it is coming, rather than after it has happened.

17

Preventive maintenance

The preventive maintenance that an operator can give instruments has been covered under "protecting instruments" in the operating duties section.

An operator can help the instrument technician properly maintain the instruments by reporting suspicious readings or actions of the instrument systems.

18

Safety

Seldom is anyone injured by instruments; however, failures of instruments installed for safety purposes can cause injuries. Examples are pressure relief valves that do not relieve, high temperature alarms that do not alarm, or high level devices on an open top tank that allow the tank to overflow.

Operating questions

1. If you do not get the desired process control, the first thing to do is call for an instrument tehcnician. (False - Check to see if the instrument system is doing what it has been directed to do.)

2. Instrument readings are always correct. (False - They normally give the operator more information than he otherwise would have, but sometimes they give false readings.)

3. Operators have little responsibility for instruments. (False - The instrument is an important part of the process and just as much the operator's responsibility as any other part of the process.)

4. Name the parts of a basic instrument system. (Primary element, transmitter, indicator-recorder, controller and control device.)

5. Manometers measure temperature or pressures. (Pressures)

6. All undesirable process conditions cause an alarm and relieve the operator of continuously checking the control board. (False - In most plants only the most critical control points have alarms.)

7. Any type of compressed air will operate pneumatic instruments satisfactorily. (False - Air must be dry, oil free, and of sufficient pressure.)

8. Instruments make an operator's job easier or harder. (Easier)

9. Closing a control valve will insure that a flow is stopped. (False - Many an operator has sadly found a full tank that should have been empty. Control valves are not reliable block valves.)

10. Recorder charts are for the front office, not for operator use. (False - A good operator can tell much about how well the process is running by the roughness or smoothness of the charts the recorders are drawing.)

11. A pH of 14 is a very strong acid. (False - It is a very strong base.)

12. One atmosphere of pressure equals 14.7 psi or 29.92 inches of mercury. (Both)

13. Magnetic flow meters have not been in use as long as orifice plates to measure flows of liquids. (True - Magnetic flow meters have come into widespread use in the last 10 years.)

14. Thermocouples signal through a pneumatic system. (False - They are used in electrical indicating systems and seldom are used with controllers.)

15. Specific gravity compares the density of the fluid being measured to what. (The density of water at 4° C.)

16. The most common control device in fertilizer plants is what? (Control valves)

17. Instrument drift to a false zero setting is one of the most common instrument errors. (True - Also one of the easiest to correct.)

20

Slides

1. This slide shows a primary element (magnetic flow meter), a transmitter, an indicator, a controller, and a control device. These are the five parts of a basic instrument system.

2. This slide shows an instrument control room. Many recorders and controllers are located here. The operator can operate much of the plant from this location.

3. This slide shows a group of primany elements -

A thermocouple	A rotameter
A gas-filled thermometer	A manometer
An orifice	

WHAT TO DO	WHAT TO SAY

Introduction

1

Burners must exist in a wide range and assortment of sizes due to their many and varied usages.

Some of the smaller burners may be no more than an open end piece of tubing serving as a pilot light and emitting only a small quantity of heat. Other burners will be more complex because of the demands placed on them. A single burner often must be capable of supplying a large quantity of heat using a variety of fuels such as coal, oil, or gas.

Burner locations

2

Burners usually are located outside of the process to which they supply heat. They may be located in the floor, walls, or ceiling of a furnace. Heat then is applied to the process by radiation and convection.

In some instances, however, heat may be supplied by combustion within the process. The fuel may be present in the process gas stream, making it necessary only to add air for combustion to take place.

Combustion requirements

3

Two requirements must be met before combustion can take place. First, a fuel must be supplied in a form suitable for burning; and second, oxygen must be available to combine with the fuel.

Fuels

4

Fuels that exist naturally in a gaseous state are the most convenient form in which a fuel can be supplied to a burner. Gaseous fuels can be supplied directly from high pressure lines or they can be stored in vessels as liquids under pressure or at reduced temperature.

Other fuels must be conditioned before they will burn satisfactorily. Coal must be pulverized and blown into the burner and oil must be vaporized with heat or atomized with a jet of air, gas, or steam.

5

Oxygen

Air is usually the source of the oxygen required to support combustion; the oxygen content of air is approximately 21% with most of the remaining 79% being nitrogen.

It is important to have the proper fuel-air ratio recommended by the manufacturer of the burner. For burners designed to use more than one fuel this ratio will vary according to the fuel used.

If air is used to supply the oxygen, an excess amount is usually supplied to insure complete combustion of the fuel.

If insufficient oxygen is present, smoking or the formation of soot will occur which indicates a loss of fuel from incomplete combustion.

On the other hand if too much air is used, an unnecessary heating burden is placed on the furnace because of the large volume of nitrogen that necessarily accompanies the oxygen.

Considering the fact that approximately one-third of the total amount of natural gas used in an ammonia plant is used for fuel, the loss due to a bad fuel-air ratio could be quite large.

6

Gas burners

Sketch on blackboard

Small gas burners may have no provisions for fuel-air mixing other than aspiration caused by the fuel as it enters the burner. The quantity of air entering can be adjusted by a movable cylinder at the base of the burner which controls the orifice size.

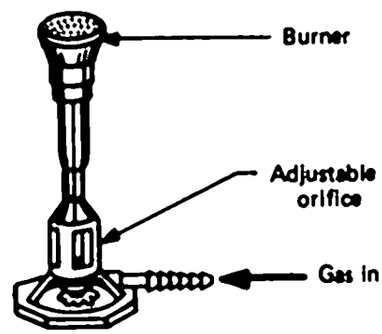

A larger burner operates on the same principle but may also have a secondary air supply at the burner under a slight pressure from an air blower.

Sketch on blackboard

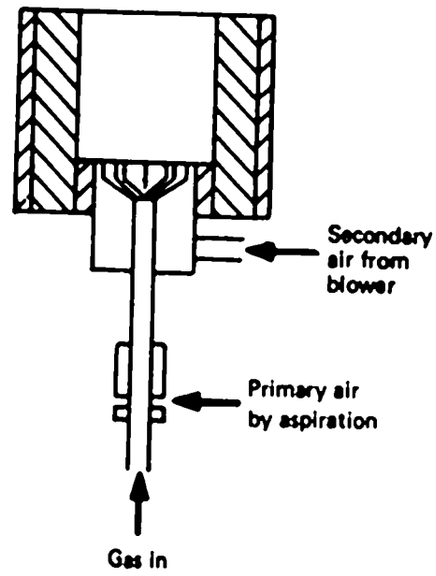

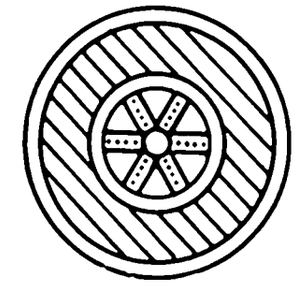

A second blower is sometimes placed in the flue gas line leaving the furnace. The purpose of this blower is to cause better distribution of heat by keeping a slight negative pressure on the furnace.

7

Oil burners

Oil must be atomized or vaporized and mixed with air before burning will progress satisfactorily.

Sketch on blackboard

Steam, air, or gas can be used as the atomizing agent. Secondary air is generally supplied by a blower to an area surrounding the burner where turbulence caused by the atomized oil will cause adequate mixing of air and fuel.

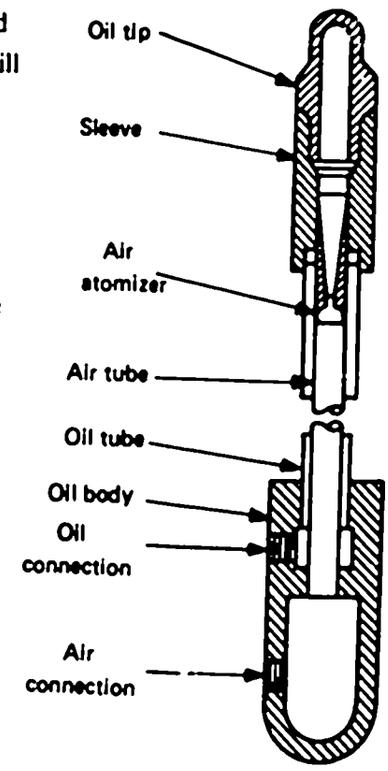

8

Coal burner

Before coal is admitted to the burner it is crushed into a fine dust by a pulverizer. a stream of air then entrains the dust and carries it to the burner. A secondary supply of air is blown into the area surrounding the burner nozzle.

Vanes or adjustable dampers are attached to the fuel nozzle and the secondary air supply to give a rotation to the streams as they enter the furnace. These adjustable dampers control the pattern of the flame in the furnace and also the amount of air from the secondary blower.

Sketch on blackboard

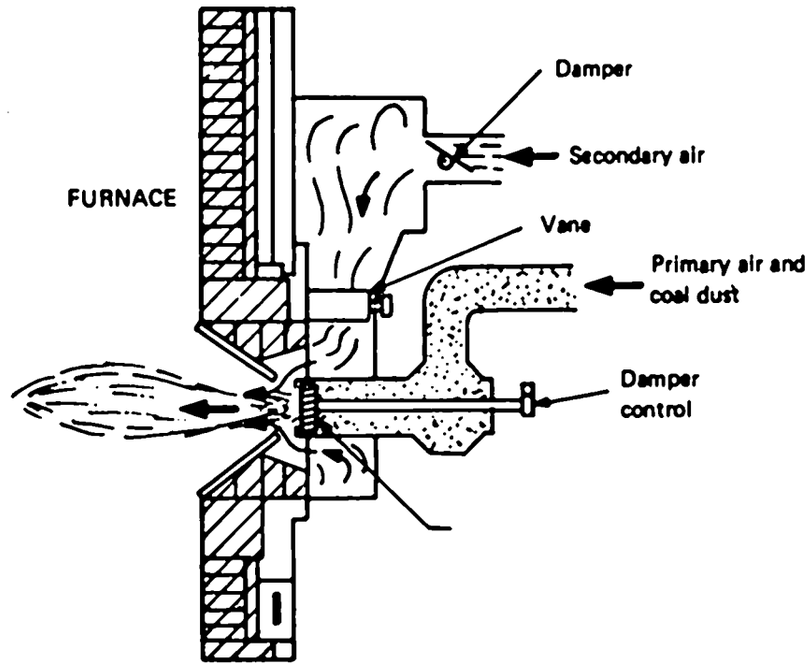

9

Uses

Burners of these types are used in many areas of fertilizer production. Some examples of their uses include:

1. The supplying of heat for the reforming process in the ammonia plant.
2. Steam production.
3. Supplying the heat necessary for nodule preparation at kiln sites.
4. The drying of raw materials and finished products in driers.
5. Flame incineration of waste gases.
6. Purge gas generation.
7. Concentration of phosphoric acid and liquid wastes. Specially constructed burners are often located below the surface of a liquid for this purpose.

10

Phosphorus burner

Most burners are designed primarily for the purpose of supplying heat to a process. One exception in the fertilizer industry is the phosphorus burner.

This burner is designed to cause a controlled reaction to occur between elemental phosphorus and oxygen, one of the first steps in the production of phosphoric acid.

This burner is very similar to an oil burner in that the phosphorus is a liquid also.

Phosphorus flows through a center pipe which has a jet at its outlet that restricts the flow and increases the velocity of the phosphorus.

This pipe is surrounded by a steam jacket which keeps the phosphorus molten.

The steam jacket is surrounded by a pipe which supplies the air for atomizing the phosphorus. The outside pipe provides a cooling water jacket around the lower part of the assembly to prevent damage by the high burning temperature.

Sketch on blackboard

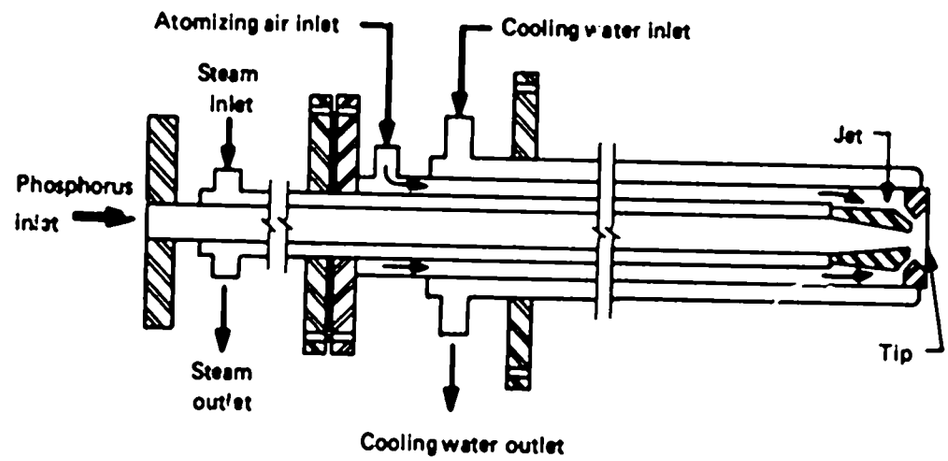

11

Operating duties

The duties of the operator are similar regardless of the type of burner used. Some of his responsibilities will include:

1. Paying close attention to the flows and pressure of the fuel and air supply.
2. Visually checking the flame for optimum heating conditions.
3. Observing the furnace off-gas for "tell-tale" signs of improper fuel-air mixtures.

4. Watching temperatures closely when a cold furnace is brought on or a hot furnace is shut down. Too rapid a change in temperature can damage refractory or tubes. The recommended temperature change probably should not exceed 100° F. per hour.

5. Keeping all damper bearings lubricated to prevent them from becoming inoperative.

12

Operating suggestions

There are many flame characteristics to which an operator should be alert. These characteristics will often indicate the cause of inefficient burner operation. For example:

1. A lengthening of the flame indicates insufficient air.

2. A reddish "dusty" looking oil flame with flecks of smoke over the bright part of the flame means there is not enough air to burn the fuel.

3. A "smoky" condition will exist for a few minutes in a cold furnace using coal as fuel when first placed in operation.

4. A high rate of fuel consumption with less than usual heat indicates an unbalanced fuel-air mixture.

13

Safety

A few rules or precautions will minimize the dangers that exist when dealing with flamable materials.

1. Do not attempt to light burners in a furnace while looking through a peephole. A small explosion could occur which would injure one's eyes.

2. If a burner in an enclosed area does not light after a few seconds, close off the fuel line quickly. Purge the vessel for 2 or 3 minutes before attempting to light the burner again. Continued addition of fuel and air into a closed area creates an explosion hazard.

3. Do not attempt to light a burner from the hot walls of the vessel.

4. When first lighting a burner use a fuel-air mixture that is rich in fuel then correct the ratio after the flame becomes stable.

14

Questions

What are some of the common fuels used in burners? (Coal, oil and natural gas)

Can a single burner use more than one kind of fuel? (Yes)

In relation to the process which requires heat, where may the burners be located? (Inside the process supplying the heat by combustion or outside the process supplying heat by radiation and convection)

What are two requirements that must be met before combustion can occur? (There must be fuel and oxygen present.)

What is the usual source of oxygen? (Air)

Give the approximate percent of oxygen and nitrogen in air. (21% oxygen; 79% nitrogen)

In what state is a fuel most easily used? Solid, liquid, or gas? (Gas)

What conditioning must often be done to coal and oil fuels before they will burn satisfactorily? (Coal must be pulverized; oil must be atomized or vaporized.)

Why is the proper fuel-air ratio desirable? (The burning will be more efficient. Less fuel will be required to supply a given amount of heat.)

Why should the temperature of a furnace not be changed too rapidly? (Stresses caused by uneven expansion or contraction could damage the internals of the furnace.)

What would the lengthening of a flame indicate? (Probably an insufficient amount of air for complete combustion of the fuel.)

Why should you not look directly through a peep hole in a furnace while lighting a burner? (There is the possibility of a small explosion if the burner does not light immediately. If this happened, a person's eyes might be injured.)

15

Slides

The first slide shows the layout of burners in the primary reformer of an ammonia plant.

The second slide shows a burner in a large kiln which is used in nodule preparation in a phosphate plant.

Next is a slide that shows the external installation of a phosphorus burner.

WHAT TO DO	WHAT TO SAY

1

Introduction

Equipment that is designed to use centrifugal force to rapidly separate solid from liquids (or two liquids of markedly different densities) are called centrifuges. Some make two separations at the same time. Centrifuges do the same job as settling or filtering equipment (described in chapter 11). Their use is not widespread in the fertilizer industry.

Do this in class

Centrifugal force is developed by rapid rotation or by movement in a curved path. It can be readily illustrated by swinging a bucket that is partially filled with water in a vertical circle.

If the bucket is swung slowly, the water will spill at the top of the circle. If is is swung rapidly, no water will spill. Centrifugal force holds the water to the bottom of the bucket even when it is upside down.

Very rapid rotation of the moving parts of the centrifuge very often causes forces that are several thousand times as strong as the pull of gravity. Of course, centrifugal force pulls harder on heavier solids or heavier fluids than it does on light fluids. This difference in pull is what causes the separation in most centrifuges.

Other types of equipment also use the principle of centrifugal force. (1) Cyclone separators to separate dust from gas streams, (2) Centrifugal compressors that increase the pressure and move gases are replacing reciprocating compressors in many uses, (3) Centrifugal-type pumps and fans are very common in fertilizer plants.

2

List on blackboard

Several uses of centrifuges are:

1. Separation (and washing sometimes) of fertilizer crystals from liquids.
2. Removal of some of the solid impurities from wet-process phosphoric acid.
3. Recovery of phosphorus from electric furnace sludge.
4. Reclaiming of prilling oil from oil-prilled solids.

Classifications

One means of classifying centrifuges is as batch or continuous. The feed to batch centrifuges is interrupted on a regular cycle to allow removal of solids. This interruption is not necessary with continuous centrifuges.

Another method of classification is whether the shaft supporting the rotating parts is vertical or horizontal. Probably the most significant classification is by the type of construction used in the moving part of the centrifuge.

Solid bowl centrifuges throw the solids (or dense liquid) to the outer wall of the bowl. After the materials are separated they are discharged from the centrifuge. Liquids usually overflow to escape the rotating bowl. Solids are either scraped out or removed by internal conveyors that are inside the rotating bowl.

Perforated basket (bowl) or slotted screen centrifuges work a lot like pressure filters. The solids again are thrown to the outer wall, but the openings are too small for it to escape. Thus these solids form a cake through which the lighter liquid is forced as it escapes through the basket openings.

Sketch on blackboard

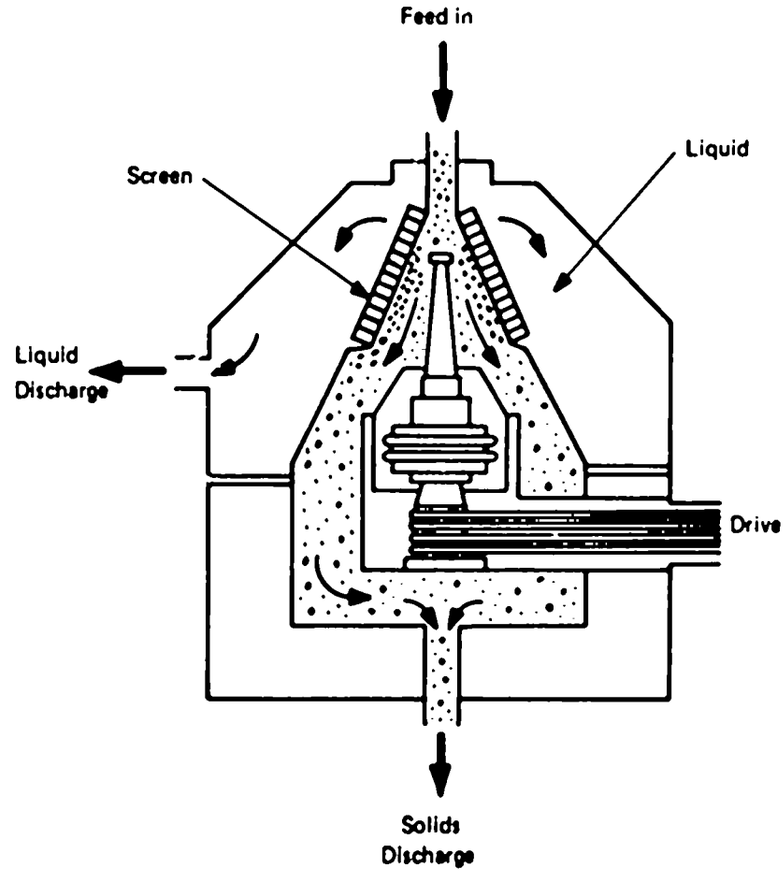

A third general classification is stacked disc centrifuges. This type has many discs which are located inside the rotating bowl. These discs rotate with the bowl.

The purpose of the discs is to shorten the distance a solid moves before it contacts a metal surface. When the solid makes this contact it is separated form the liquid.

Heavier solids or liquids move down through the discs while lighter liquids move up through the discs. Stacked discs are frequently used to make the final removal of small particles to give a very clear liquid discharge.

Stacked discs are used in centrifuges that have solid bowls and also in centrifuges which have a few discharge nozzles in the wall of the bowl. These nozzles are used as a method of discharging solids.

Sketch on blackboard

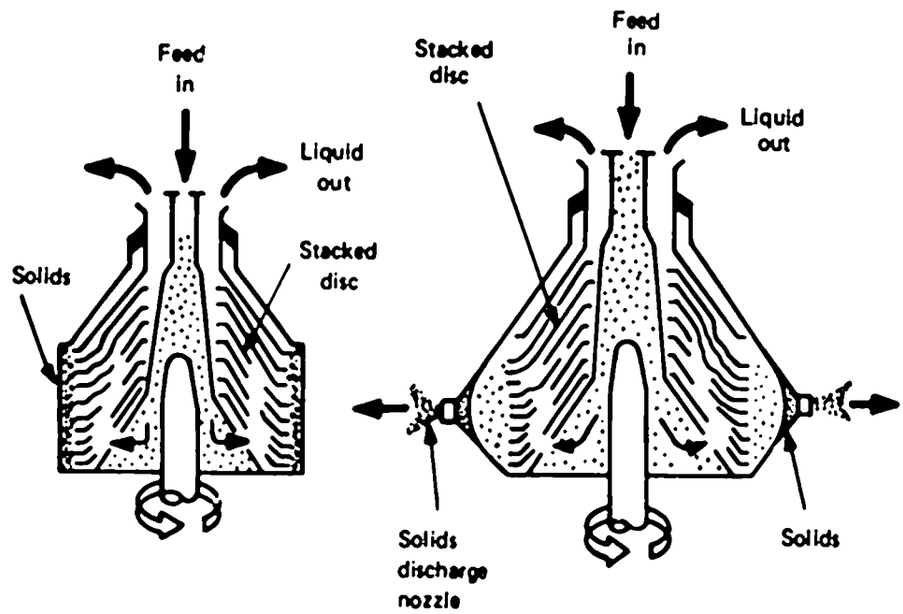

4

Removal of the solids from the rotating centrifuge is one of the design problems encountered. As indicated earlier, nozzles are used for this purpose. Scrapers (plows or doctor blades) are used frequently also. Another method is internal conveyors; these are usually adaptions of screw conveyors.

A fourth method is a pusher-type discharge for use on horizontal-type centrifuges. A system (normally hydraulic) is used to slowly reciprocate a pusher in the basket in a horizontal direction. This action of the pusher causes one of the separated materials to overflow the lip of the basket.

Sketch on blackboard

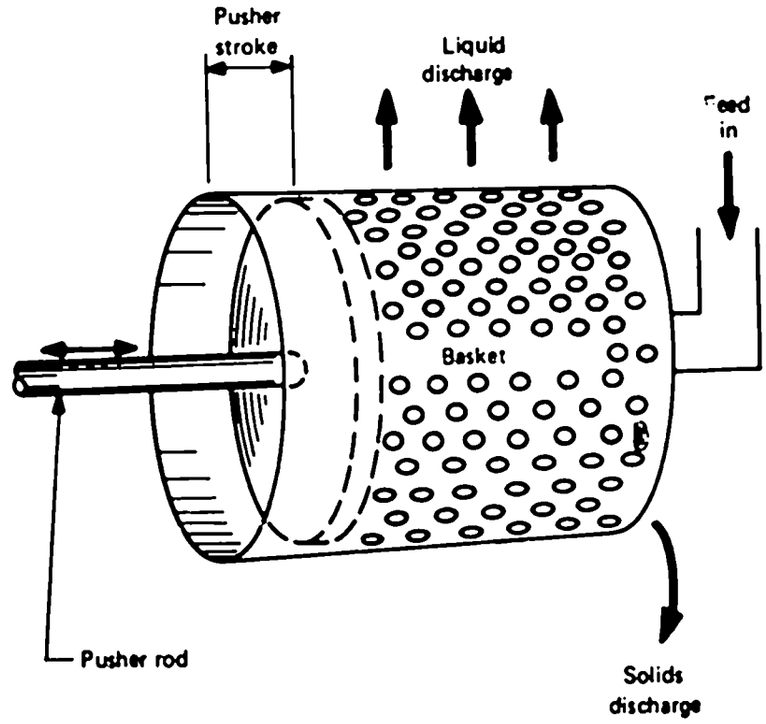

Important

The most difficult problem in centrifuge design is to maintain the balance of the rotary part of the centrifuge. Rotational speeds of several thousand revolutions per minute are not uncommon. Faulty balance can cause great damage at such high speeds.

Many centrifuges are now enclosed in housings that prevent loss of materials and fuming in the working area.

5

Operating duties

Centrifuges usually require less attention than most process equipment. However, the good operator appreciates equipment that operates trouble-free and he gives it the attention it requires to keep it operating in this manner.

The operator should check for unusual noise or heat since these are more critical than with most equipment, because of the high rotational speeds. He maintains proper levels of lubricant for the same reason.

Any uncommon noise or vibration is sufficient reason to shut down the centrifuge for inspection. A stoppage in a solids discharge nozzle or solids buildup on the bowl can cause vibrations that will cause damage. The operator can correct both of these by changing nozzles or by washing.

Some types of centrifuges are subject to flooding. This condition means there is too much unseparated liquid with the solids. Some common causes of flooding that the operator should check are: (1) too high a feed rate, (2) stoppage or buildup on the bowl, or (3) too low a rotational speed.

The operator should make sure the bowl is clean before starting those model centrifuges that allow observation of the bowl without taking the centrifuge apart. If the bowl cannot be inspected, it is a good practice to quickly start and stop (bump) the centrifuge to see if there are any unusual vibrations.

6

Several times during the shift, the operator should check the feed material to the centrifuge to see that it is of the proper composition. Often this composition determines how much can be fed. He also keeps the feed material at the proper temperature, when this is important.

Shift duties

Observations should be made frequently of the materials being discharged from the centrifuge. These observations (such as described in flooding) tell the operator how to regulate his feed and when to clean the centrifuge.

If the discharge materials are not properly separated, and normal adjustments or cleaning by the operator do not correct the situation, he should report that maintenance inspections are needed to find if there are worn or faulty parts.

Oil feed, level, or pressure, should be checked several times per shift.

A strainer in the feed line is necessary in all high-speed centrifuges to protect the machine from lumps or scrap metal that could cause damage. The operator should blow-down or back-flush the strainer several times per shift to keep a proper flow to the centrifuge.

If he should find lumps or metal scrap when cleaning the centrifuge, the operator should have the strainer changed or repaired.

Some centrifuges are equipped with amp- or voltmeters, which will indicate stopped nozzles or buildup of solids on the bowl. An increase in

amps indicates to the operator that he needs to clean his equipment. Visible vibration or noise are other indicators of the same trouble.

Tension of the V-belts on the drive should be checked once per shift. Loose or stretched belts are a hazard at high speed. This condition may also permit slippage that results in the centrifuge turning too slow and not working properly. Overly tight belts can misalign the centrifuge and cause vibration or bearing wear.

7

Occasional duties

If the operator finds crystals in the liquor discharge when operating a slotted basket or perforated bowl centrifuge, he should clean the basket and inspect for wear. It probably will be necessary for maintenance to repair or replace the basket or bowl.

Some centrifuges are washed by adding water and spinning the centrifuge. When this is done on nozzle machines, a nozzle is sometimes left out to improve cleaning. The operator must be careful, run the centrifuge in brief spurts, and avoid reaching speeds where vibrations are large.

8

Safety

The greatest danger in operating centrifuges is unbalance and the resulting heavy vibrations. The machine can tear up and injure people in the area. Such accidents are very rare, because of operator attention and the rugged construction of the centrifuges. Some centrifuges are equipped with shutdown devices that will stop the centrifuge if overloads or excessive vibrations occur.

Hazards of rapidly moving equipment are present, particularly at the drive. Reaching inside or poking into centrifuges is extremely dangerous and should not be done.

Some materials that are centrifuged are hazardous and call for special precautions when sampling and when opening valves.

9

Preventive maintenance

Proper lubrication is a must because of the high rotational speeds.

Routine inspections for wear while cleaning the centrifuge often disclose worn parts that should be replaced.

Questions

Centrifugal force can be used to separate two liquids of different densities. (True)

Which material will go to the bowl wall in a centrifuge—the heavier or the lighter? (Heavier)

Centrifugal forces of 10 times or 10,000 times the pull of gravity are developed in centrifuges? (10,000 times—both really, but 10 times is a very low centrifugal force for centrifuges.)

Name four fertilizer uses of the centrifuge. (Crystal-liquid separation, solids removal from wet acid, phosphorus separation from sludge, and oil removal from oil-prilling product)

Batch centrifuges have fewer feed interruptions than continuous centrifuges. (False—feed must be stopped on a regular cycle to operate batch centrifuges.)

Slotted screen centrifuges work like what? (Pressure filters)

Stacked discs can be used to give a very clear, lighter liquid discharge. (True)

What is the most difficult problem in centrifuge design? (Proper balance of rotary parts)

What, other than noise, warns the operator of stoppages or buildup in the bowl? (High amps, slow discharge of solids, or poor separations)

What is the term for too much liquid in the solids? (Flooding—usually caused by too much feed or a dirty bowl)

What precaution should be taken before starting the centrifuge? (Clean the bowl or bump the centrifuge if you cannot check the bowl.)

Strainers are often or seldom used in the feed line to the centrifuge? (Often—the centrifuge must be protected from lumps or scrap metal.)

Can the operator tell anything by observing the product discharged from the centrifuge? (Yes—can tell flooding as mentioned in an earlier question. The operator should continue to increase the feeds until separation is not so

good as desired. He then reduces the feed a little to get quality. In this manner he gets maximum production.)

What is the greatest danger in centrifuge operation? (Unbalance of the bowl and the resulting vibration)

11

Slides

Slide No. 1 is a slotted basket for use in a horizontal pusher-type centrifuge. It is used to separate fertilizer crystals from a solution.

Slide No. 2 is a stacked-disc (vertical) centrifuge that has nozzles in the bowl for solids discharge. This centrifuge is open for inspection. It is used to separate phosphorus from sludge.

WHAT TO DO	WHAT TO SAY

1

Introduction

Both heating and cooling are common operations in fertilizer plants. Probably because they are so common, there are many ways of doing both operations. These "ways of doing" fall into two major groupings: (1) those for solids, and (2) those for liquids or gases. We will discuss each grouping in detail.

Make a list of these by asking students for examples

The reasons for heating or cooling are also fairly numerous. Some of these are:

1. Heating to dry (to drive off moisture).
2. Heating to drive off impurities other than moisture.
3. Heating to recover process heat that would be wasted.
4. Cooling to avoid plasticizing and lumping.
5. Cooling for safety.
6. Cooling to protect equipment (corrosion or heat damage).
7. Heating or cooling to change the physical character of the material. (This covers many operations–nodulizing, condensing, vaporizing, crystallization, etc.)
8. Heating or cooling to improve the mechanics of the process.

2

Solids

By far the most frequently used equipment in a fertilizer plant for heating or cooling solids is a rotating cylindrical vessel whose long dimension is horizontal rather than vertical. The material to be heated or cooled flows through the cylinder.

Sketch on blackboard

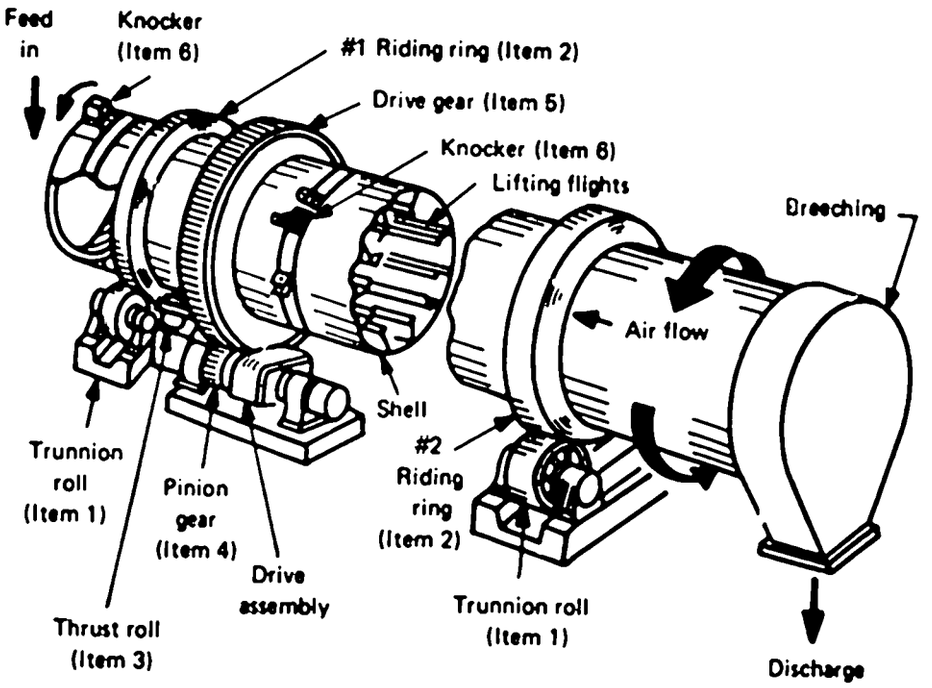

Air is forced through these vessels to do the heating or cooling. Cooling is frequently done with ambient air, but refrigeration is sometimes used to lower the temperature of the air. Usually, in order to supply heat it is necessary to use steam or a direct flame to raise the temperature of the air.

As the material moves through the vessel it comes into contact with the air and is either heated or cooled by this contact, depending on the relative temperature of the material and the air.

Temperature changes in these vessels can vary from only a few degrees to several hundred degrees Fahrenheit. This depends on the process use for which the equipment is designed.

3

Common parts of the system

There are many parts commonly used in this system of heating and cooling solids. Some are used in practically all such systems while others are for specialized use only.

First, the cylindrical vessel must be supported so that it can be rotated. This is done by using trunnion rolls. These trunnion rolls (item 1 of sketch) are sheels and shafts that rotate in stationary stands that have bearings in contact with the shaft.

The trunnion roll is in contact with a riding ring (item 2) which is attached to the cylindrical vessel. Riding rings and trunnion rolls have machined surfaces to insure a smooth rotation.

Usually two riding rings and four trunnion rolls are used. The cylindrical vessel is mounted on a slope of a few degrees to help move the material through it as it rotates. This slope makes it necessary to use a thrust roller (item 3) to make sure the kiln stays in the desired position.

Secondly, the cylindrical vessel must be rotated. Energy from a drive motor is passed to the vessel through a small pinion gear (item 4) to a large drive gear (item 5) which is attached to the shell of the vessel. Usually rotation of the vessel is slow (5 to 15 revolutions per minute).

Thirdly, the air must be forced through the cylindrical vessel. Fans (often several) are used for this purpose. If the air flows the same direction as the material, it is called cocurrent. If the air flows opposite to the material, it is called countercurrent.

Lastly the material must be fed to and discharged from the cylindrical vessel. Chutes, conveyor belts and mechanical feeders are used for these purposes.

4

Specialized parts

Frequently lifting flights are installed on the inner surface of the cylinder. Many shapes of flights are used, but they all do the same job. They lift the material from the bottom of the cylinder to the top and drop it through the stream of air back to the bottom.

The material is raised and dropped many times as it goes through the cylinder. This, of course, improves the heating or cooling by giving good contact between the air and the material.

Sticky materials sometime fill the flights and will not fall out. Knockers or rappers (item 6) are attached to the outside of the cylinder in a manner that gives a sharp blow as the cylinder rotates. This helps dislodge sticky materials and helps to keep an even flow of material.

Usually the used air from these systems is dusty. Many times either the value of the product lost as dust or the pollution that such a loss causes makes it desirable to use dust recovery equipment. Cyclones, scrubbers, and filtering system (discussed in other chapters) are used.

5

There are other systems for the drying or cooling or solid materials. However, they are used less frequently in fertilizer plants than the rotating cylinder just described.

One such system is a fluidized bed system. In this system the air which cools or heats is used to support (or support and move) the material. One such example is a sloped conveyor that has an air compartment in the bottom. The air escapes this compartment through many holes. As it escapes it supports and moves the material.

Another system is the traveling grate. In this case a metal conveyor belt moves the material. The conveyor has slots or openings that allow air to be forced through the material as it travels on the conveyor.

6

Liquids or gases

Heating and cooling of liquids or gases probably is done in more different ways than heating and cooling of solids. Some of them are not very efficient but are worthwhile because they are simple.

Occasionally heating or cooling of liquids or gases is done by bringing them in direct contact with the medium. Spraying cooling water into a hot gas duct is one example. Live steam in contact with a process liquid stream is another example.

Much more frequent is the indirect heat exchange which occurs when the heating or cooling medium is in contact with one side of a metal surface and the liquid or gas to be heated or cooled is in contact with the other side of the metal surface.

7

Methods

Heating or cooling occurs in all process vessels because of their contact with ambient air. (In many cases we insulate to reduce this effect if heating or cooling is not desirable.)

One of the simplest cooling systems is the spraying or dripping of water on the outer surface of process vessels, pipes, or tanks. This is not a very efficient method because of poor contact of the process material with the cooled surface. Many times such an application causes housekeeping problems.

A better method that is frequently used is inserting (usually submerging) pipes into a process vessel or tank. The heating or cooling medium flows through the pipes. A coil rolled from pipes gives more contact surface for heat transfer than does a straight pipe.

Hollow passages fabricated between metal plates is a commercial adaptation of this type of heating or cooling. These plates are more efficient than pipe coils.

Sketch on blackboard

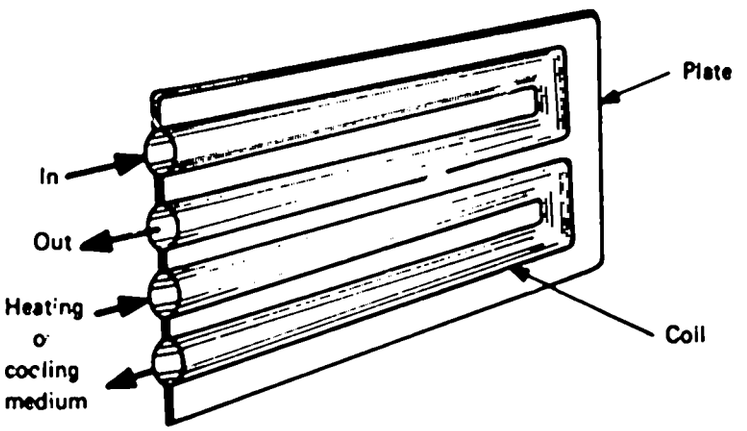

Another similar adaptation is the cascade cooler. The material to be cooled flows through a series of horizontal pipes that are connected on the end by U-bends. A distributor trough feeds a uniform curtain of water over the outside of the pipes.

Pipes within a pipe are another method. These are often called double pipe or jacketed systems. The material to be heated or cooled flows in one pipe (usually the inner pipe) and the heating or cooling medium in the other pipe.

8

Shell and tubes are important

The most efficient adaptation is the shell and tube heat exchanger. It is also the most expensive and the most difficult to maintain. This system is more efficient because it divides one of the streams (process material or heat transfer medium) into many small streams to improve the contact with the metal surface.

Sketch on blackboard

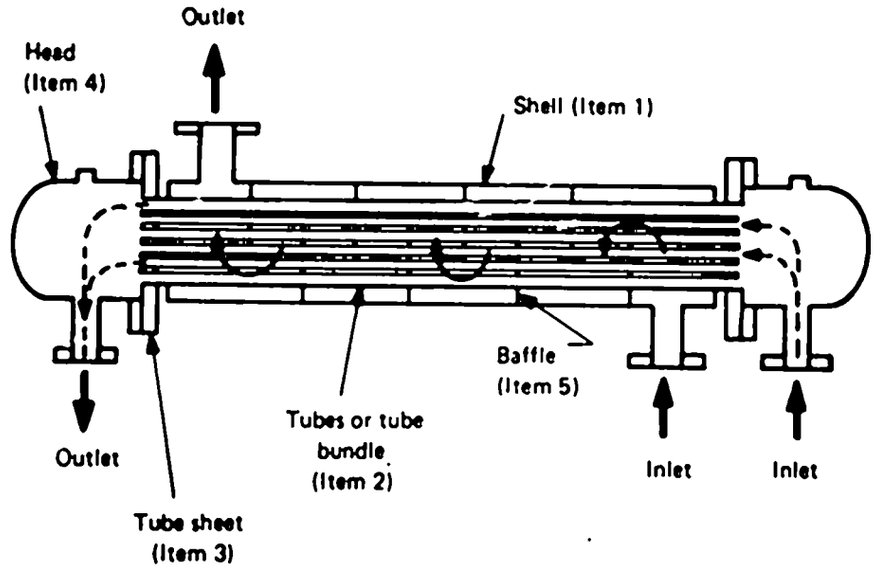

Shell and tube heat exchangers are made up of several parts. The shell (item 1) is a pressure container with an inlet and outlet opening (nozzle). Frequently several hundred tubes make up the tube bundle (item 2) which the shell encases.

Tube sheets (item 3) are used on both ends of the tube bundle to keep the materials in the tubes and in the shell separated. One of the most frequent leak points is between the tubes and the tube sheet.

Heads connect to the tube sheets on both ends (item 4) to collect the flow to and from the tube bundle. Baffles (item 5) are used outside the tube bundle, but inside the shell, to insure better contact with the outside of the tube bundle.

The material to be heated or cooled can flow through the tube bundle, or through the shell if preferred. Of course, the heating or cooling medium must flow through whichever route is not used by the material.

Note

Usually flowing streams which contain solids or are likely to solidify are directed through the tubes. This is because the tubes are easier to clear of stoppages than the shell.

Shell and tube exchangers are referred to as single pass, double pass, triple pass, etc. A single pass means that there are no baffles in the heads and all of the fluid enters the tubes on one end and discharges from the other end. Double pass, triple pass, etc. only means that the heads are baffled to use only a part of the tubes in each direction, and that the flowing fluid goes back and forth through the tubes the designated number of times.

Operating duties

The most important single factor for the proper operation of heating and cooling equipment is for the operator to know what the process temperature should be and to check for troubles when they are not what they should be.

For solids

The temperature of the air to the heater or cooler must be right. It it isn't, look for trouble in the heating system or the refrigeration system. Of course, if the process uses ambient air you can do nothing about this temperature.

Improper air temperature coming from the heater or cooler means improper air flow or improper contact in the cylinder. Dampers set in the wrong position, inleakage of air, or buildup in lifting flights can cause this trouble.

Proper temperature of the material from the heater or cooler is the reason for having the equipment. Improper temperature here can result from the feed material being the wrong temperature or wrong composition (too much water for instance), improper air flow, or improper contact in the cylinder.

Many good operators develop the sense of feel to the point that they can handle solids from the heating or cooling equipment and can tell if the equipment is performing properly. (Note: This can't be done with materials hotter than 130° F.)

During his shift the operator should be alert for unusual noises or equipment temperatures, particularly at the drive for the cylindrical vessel and at the fans. He should be alert for vibration at the fans. A vibrating fan should be shut down. Sometimes washing the fan will remove buildups and restore good operation.

He should inspect to see that the drive gear is coated with lubricant. At the same time he should watch for any shaking of the drive gear. Loose bolts will cause this.

Slipping or jerking in the kiln rotation indicate worn teeth on the drive gear or its pinion. This should be reported. Buildup in the flights can do the same thing.

Shift duties (solids)

Knockers or wrappers should be observed to see that they are working and also to see that they are secure (for safety).

The operator looks for and clears any buildup in the air ducts and cyclones. Rodding or jarring the cyclone discharge is often necessary. Pressure measurements are sometimes necessary to locate stoppages in ducts.

The flow of scrubber liquor should be checked and sprays cleaned when necessary on dust-collecting scrubbers. The good operator frequently looks at the stack discharge from the dust-collecting systems to see that they are not letting dust escape.

Important

One of the things that the operator has to watch for is stoppages in the feed to or the discharge from the heating and cooling equipment. Frequently he can avoid equipment delays by clearing the stoppages *fast*.

When the equipment is off the operator should look for excessive wear on drive gear teeth and trunnion rolls. He should look inside the cylinder for damaged or stopped up flights. Loose or missing bolts in the drive gear or shell should be reported.

10

For liquids and gases

Heating and cooling equipment for liquid and gases are fairly trouble-free. Fairly trouble-free should not mean they get no attention.

As with solids, the temperature of the heating or cooling fluid in and out are important. Even more important is the temperature in and out of the material to be heated or cooled.

Improper temperatures of the heating or cooling fluid frequently result from valves not being opened to the right position or valve failure (such as the seat being off the stem).

Improper temperature of the process material discharged from the heating or cooling equipment can be caused by improper temperature of the feed material, insufficient flow of the heating or cooling fluid, or fouling on either side of the metal surface.

During his shift the operator should frequently observe temperatures in and out of both the heating or cooling fluid and the process fluid. Flows of both these streams should be checked. Sometimes pressures are used to indicate if the desired flow is present. Note: Sometimes excessive heating or cooling fluid can be used with very little benefit. This is expensive and the good operator controls to use the minimum fluid that gets the desired results.

Shift duties (liquids and gases)

The operator should see that sprays or drip pipes are properly directed to keep the outer surfaces wet when surface cooling is used. At the same time, he looks for and clears stoppages in sprays and troughs.

Important

He should look for leaks, drips, or spills since these can represent losses of valuable products. These also frequently cause damage to equipment and foundations. Catch these fluids in buckets; report the leaks for repair.

Visible film or buildup on the metal surface should be cleaned off if possible. Strong vibrations of heating or cooling equipment should be reported since the equipment is sometimes damaged in this manner.

The good operator knows on which side of the metal surface there is the highest pressure. This means that this fluid will mix with the other fluid if there is a leak in the metal surface (or through a gasket.)

He can then detect leaks that might otherwise be unobserved. An example is checking the pH of cooling water used in an acid cooler. Any acidic pH indicates the cooler is leaking.

If the cooling water is at a higher pressure than the acid, a leak would allow dilution (weakening) of the acid. Specific gravity checks of the acid before and after the cooler will indicate a water leak into the acid.

When the equipment is off it should be inspected for visible damage (corrosion, cracks, or breaks). Buildups on the metal surface that cannot be removed during operation frequently can be removed when off.

11

Safety

Sampling at the heating and cooling equipment is one of the most frequent dangers. Some samples require the use of protective clothing such as eye protection and rubber gloves.

Cylindrical vessels for heating and cooling of solids require the same attention as all moving equipment, particularly at the drive gears and trunnion rolls. Falling knockers or rappers which have come loose are an additional danger.

Leaks or sprays under pressure are possible dangers around some heating and cooling equipment.

12

Preventive maintenance

Most of these items were covered under operator duties.

Lubrication is important on cylindrical vessels for solids because of the usually heavy loads at the drive gear and trunnion rolls.

Stopping vibration on fans and on liquid and gas heating and cooling equipment gives them a longer life.

13

Questions

What is a trunnion roll? (The support for cylindrical heaters or coolers for solids. They allow rotating movement.)

What do rappers (knockers) do? (Dislodge buildup in flights by the shock of impact)

What is commonly used as the heating or cooling medium in cylindrical heaters or coolers? (Air)

What do lifting flights do? (Pick up the material and drop it through the air to give better contact.)

Traveling grates are never used for cooling solids. (False - They are used in both heaters and coolers for solids.)

The most important single factor in heating or cooling solids is to know when process temperatures are not right and to look for the trouble. (True)

Too much moisture in the feed material can affect the temperature of the dry solids discharged from a cylindrical heater. (True - It will reduce the temperature of the product.)

Feeling of the material from cylindrical heaters of coolers is seldom of any help to an operator. (False - Many times it can be a good guide to an experienced operator.)

What one point tells an operator whether a dust-collecting system is working? (The discharge from the stack. This is not the only point to watch.)

Wear on gears or trunnion rolls is the responsibility of maintenance and of no concern of the operator. (False - Frequently the operator is the first to note and report this wear.)

Spraying water on the outside of a tank is a *very* efficient or *not very* efficient means of cooling? (Not very efficient - but still often worthwhile because it is easy to do and can be done quickly.)

Air is the most frequently used heating or cooling medium for liquids and gases. (False - Steam and water are used more frequently.)

Do straight pipes or rolled coils give the most contact surface? (Rolled coils)

What are the most efficient types of liquid or gas heaters and coolers that were discussed? (Shell and tube heat exchangers)

Heating or cooling medium is only used in the shells of shell and tube exchangers. (False - The design can be for this medium to be either in the shell or in the tube.)

Flowing the acid to be cooled through the tubes can reduce the price of a shell and tube heat exchanger. (True - The tubes may have to be stainless steel to resist corrosion, but the shell can be mild steel if water is being used as the cooling medium.)

Which is easier to flush out or clean, shells or tubes? (Tubes)

Does this sound confusing? Why is it true?

Will fouling of the metal surface increase or decrease the temperature of a liquid being heated? (Decrease) Of a liquid being cooled? (Increase)

What is a possible pollution source in liquid or gas heaters or coolers? (Leaks)

Do dry metal surfaces indicate good or bad heating or cooling? (Bad - You can get no heating or cooling where the heating or cooling medium is not in contact with the metal surface.)

Pressure gages can be used as an indication of flow? (True - They will not tell what the flow is, but if you have no pressure you also have no flow.)

More flow of heating or cooling medium always means better heating or cooling. (False - Usually there is a flow beyond which you get very little improvement by increasing the flow.)

Can you determine which direction a leak will go in a shell and tube heat exchanger? (Yes - It will go from the high pressure fluid to the low pressure fluid.)

When sampling acids you need rubber gloves but no eye protection. (False - Your eyes are one of the easiest parts of the body to be damaged with acid. Wear eye protection.)

Fan vibration can be stopped only by balancing by maintenance people. (False - Sometimes an operator can wash a buildup of material off a fan and stop its vibrations.)

Slides

14

This slide shows both a rotating cylindrical heater and a traveling grate heater.

This shows the inside of a traveling grate heater.

This is the inside of a cylindrical cooler. Note the lifting flights. This cooler is in motion and in operation.

This slide shows a shell and tube heat exchanger being taken apart.

This slide shows surface cooling on the outside of a tank.

WHAT TO DO	WHAT TO SAY

1

Introduction

Granulation is the manufacture of sized, solid spherical particles from fine solid particles and a melt or slurry. The sized, solid spherical particles are called granules. Granules are formed by the softening, melting, or crystallization of the solid particles in the liquid. This causes the small particles to stick together or become coated with a fresh layer of material.

The small particles can be either returned fines or a new feed, or a combination of new feed and recycled fines.

2

The equipment usually used to granulate fertilizers is the drum (ammoniator granulator), pug mill (blunger), and the pan granulator. Each kind of granulator has special operational advantages and disadvantages.

In the following descriptions and discussions of granulators, a feed solution or slurry containing 15 to 5% water is normal. The recycle material is dry, minus 12-mesh material. The granulated material leaving the granulator is hot and moist. It usually requires drying, sizing, and cooling before leaving the plant.

3

Drum granulator

The drum granulator is a cylinder mounted on rollers (trunnions) so that the drum is rolled by a drive motor. The drive power is transmitted by a ring gear and pinion or a chain drive that encircles the drum.

Sketch on blackboard

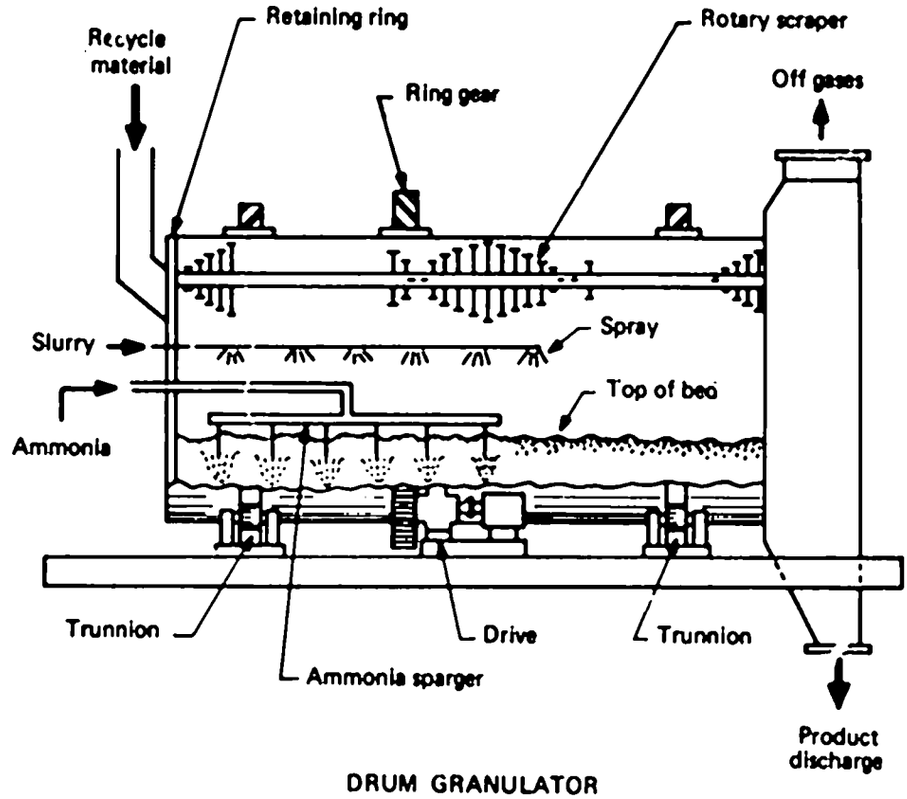

DRUM GRANULATOR

A chute delivers the recycled material to one end of the drum. The feed end of the drum has a retaining ring to keep the materials in the drum. The discharge end of the drum may vary in the manner of size and type of discharge ring. Some drums have no ring.

A beam usually runs through the drum. This beam is used to support the spargers, distributors, sprays, and associated piping. Because of the beam length and force, the beam is usually of large pipe or heavy H-beam construction.

4

Spargers are drilled or slotted pipes that are submerged in the rolling bed of material being granulated. Most commonly a sparger distributes ammonia under the bed. Spargers are also used to distribute ammoniating solutions, acids, or other liquids or gases.

Distributors are used to spread a solution or slurry on the bed. The rolling action in the drum then tends to mix and spread the liquid to all particles. Distributors can be simple open-ended pipes, slotted pipes, a series of spray nozzles, or a trough with serrated discharge edge.

Drum granulators also have some type of scraper to remove the hot, wet layer that sticks to the drum walls. The scrapers vary from fixed blades to reciprocating or rotating arms.

Some drum granulators are also fitted with rappers that dislodge the shell coating by impact on the outer surface of the drum.

Now to put all of these items together. The recycle feed enters the revolving drum and is wetted by an acid slurry. The slurry is coated onto the recycle particles. It is also neutralized by ammonia from the under bed sparger.

The neutralization reaction heats and drys the particles. The rolling action causes the particles to stay separate and become rounded. The scrapers keep the wall clean to allow good rolling action.

5

Operating duties

Good granulation is dependent on the operator. No matter how good the control devices, close observation by the operator is essential. He must make changes in the variables to continuously maintain good granulation. To do this properly, he must know the effect of each variable on granulation. General guides can be given, but experience is an invaluable asset.

6

The operator must match the recycle rate to the slurry feed rate. Usually the slurry rate is changed as the recycle rate is maintained at a maximum. Ammonia or ammoniating solution is added to give a desired neutralization or temperature. Steam or water may be added from sprays or spargers to increase the bed moisture and make the particles grow larger. Air may be sparged under the bed to reduce the bed moisture and reduce particle growth.

The sparger openings need periodic cleaning. This is often done by steaming. The sparger outer surfaces and supports also require cleaning. Rodding during operation is effective. Reversing the drum rotation is also effective. At about 3-day intervals, it is necessary to shut down, enter the drum and break the caking off the sparger, its supports, and the drum head ring.

7

The shell scrapers must be maintained in good condition to give good granulation. Frequent observation of the scraper is required. Not only must the scraper mechanism work, but the cutters must be scraping. It is often difficult to see the scraper in a dusty or smoky drum. Sometimes it is necessary to interrupt the feeds for a minute to get a good view.

It is helpful to rap the shell with a wooden maul once or twice a shift to remove the hard caked layer on the shell. (Steel hammers should not be used; they bend the drum.) This helps the scraper do a more effective job.

8

The material leaving the drum often tends to be sticky or plastic. This sticky material will build up on the lump grid and also build up in the discharge chute.

This buildup must be removed to prevent stoppages. If cleaned hourly, few problems occur; but, if neglected, a shutdown to clear a stopped up chute will occur. Usually rodding the chute will be enough.

A lump grid to catch the lumps from the sparger and other drum internals is placed between the drum discharge and the dryer chute. This is to prevent large lumps from wedging in the chute. The captured lumps are broken with bars or hammers so that they pass the grid.

Important

The drum has a tendency to discharge many lumps at one time (as when the sparger is rodded), and quick action must be taken to prevent the lump grid from stopping up. If the lump grid stops up, a heavy spill or shutdown will occur.

Fume ducts need periodic cleaning to allow good venting of the drum.

It is important to clean up spillage to protect drives, bearings, etc.

9

Preventive maintenance and lubrication

Lubrication of the granulator is usually prescribed by the manufacturer. The drive train requires periodic lubrication. If a speed reducer is used, filtering, cooling, and adequate oil pressure must be maintained. The drive pinion and ring gear or chain and sprocket should be treated weekly with a stiff, adhesive grease (Crater compound).

Drive train couplings should be lubricated every 6 months. The drum support trunnion bearings should be lubricated weekly. A high quality, "extreme pressure" grease has been found to be very satisfactory.

Grease buttons should be cleaned before connecting the grease gun. The bearing should not be filled too full. The seals will fail when grease pressure is applied to a full bearing. Protection of bearings from solution and solid spills will help to prevent accidental intrusion into the bearings which causes early failure.

The scraper operating mechanism requires frequent lubrication. The frequency depends on the type used.

10

Spargers should be inspected at least monthly for hole enlargement which will cause poor distribution of the sparged material. The sparger itself and its supports should also be inspected for bending or damage. An improperly located sparger will give poor operation.

Liquid distributors also need frequent inspection. Spray stoppages, worn holes, and improper slope or location will occur and must be corrected.

Worn or damaged scrapers can also cause trouble. They cause uneven material flow and can actually cause material to back out the head end of the drum.

11

Safety

Hot acid solutions are used in the drum. Splash goggles and rubber gloves are the minimum protection needed when handling the solutions.

Hard hats should be worn in all operating areas. Dust and falling fertilizer particles cause the need for safety glasses in the granulator area.

At times, escaping fumes or dust require that chemical and dust masks be used.

There is the hazard of lumps falling in the granulator from the beam or scraper. Caution is advised even when just looking in the granulator or when breaking lumps on the lump grid.

12

Much care must be used when rodding the sparger. The bar may become hung and moved violently by the drum rotation.

When it is necessary to enter the drum, the power to the drum drive and scraper drive must be pulled. Solutions and ammonia must also be valved off.

Lumps on the beam and scraper should be knocked off. They may fall if this is not done.

The temptation to enter the drum to clean the sparger without taking the above precautions must be resisted.

13

Pugmill

The pug mill is a U-shaped trough with twin shafts equipped with paddles. The drive power is applied to rotate the shafts.

Sketch on blackboard

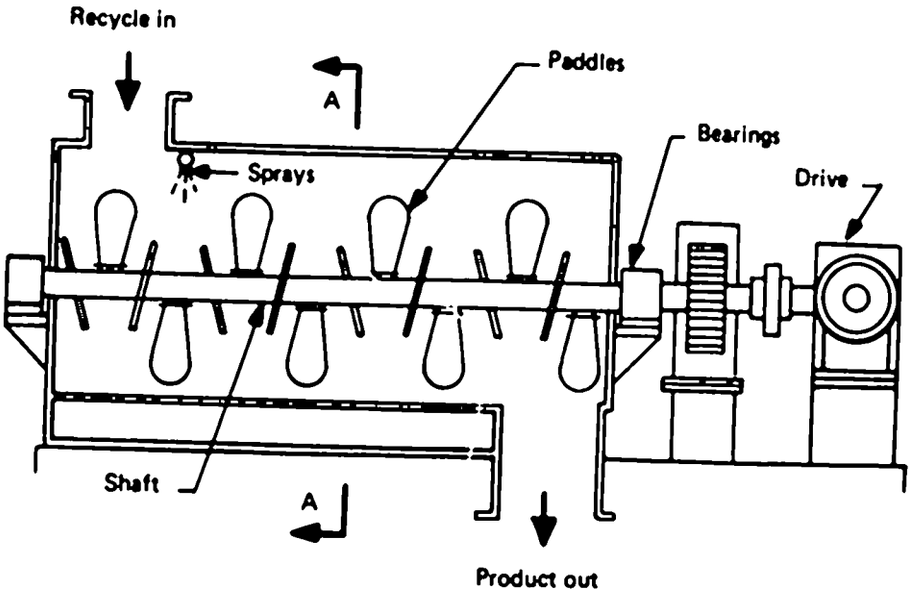

SECTIONAL ELEVATION

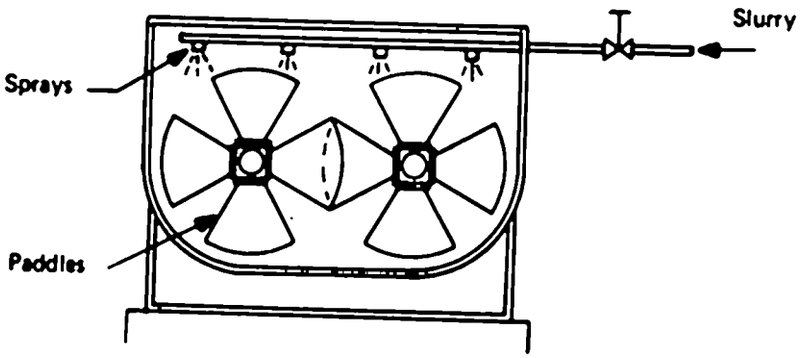

SECTION A-A

PUG MILL

A chute delivers recycle to one end of the mill. The slurry is distributed onto the recycle bed through open end, drilled pipes, or spray nozzles. The mixing action of the paddles thoroughly mixes the recycle and slurry. In this way the recycle material is agglomerated or coated with the slurry salts.

The mill tends to be self-cleaning by the paddles. The granulated material discharges through an opening in the bottom of the trough at the end of the mill.

14

Operating duties

The operator controls the granulation by changing the proportions of slurry and recycle. Close observation of the mill product and material action in the mill is needed. These observations usually indicate when and what corrective action is needed.

A lump grid to catch "shell-out" of the mill is used to protect chutes from stoppage. This oversize must be broken as it occurs to prevent stoppage of the grid.

The chute from the grid to the dryer must be rodded or cleaned frequently as the hot, moist granular material sticks in a chute. Fume and dust ducts must be kept in service by frequent cleaning. Cleaning is done by rodding and rapping to loosen deposits at pickup points, bends, etc.

The shaft bearings and drive unit of the pug mill require frequent cleaning to prevent fertilizer from getting into and ruining the bearings.

Fume ducts need periodic cleaning to allow good venting of the mill.

It is important to clean up spillage to protect drives, bearings, etc.

15

Safety

The slurries entering the mill are hot and often acidic. The mill action tends to splash those liquids. Splash goggles and rubber gloves should always be used around such liquids. A transparent shield at the feed end of the mill helps to protect the operators.

Hard hats should be worn in all operating areas.

Dust and falling fertilizer particles cause a need for safety glasses in all operating areas.

Fumes and dust can cause the need for a chemical and dust mask for operators.

The pug mill will need cleaning. It must not be rodded when operating as the paddles may catch the bar and hurt the operator. Do not put your hands in the mill when it is operating. When the mill must be entered, the power to the drive must be pulled. The solution piping must be valved off.

16

Pan granulator

The pan granulator is a disc with sidewalls; its bottom is inclined at an angle. The disc is rotated on a central stem. The stem is driven by a motor-gear reducer drive train.

Sketch on blackboard

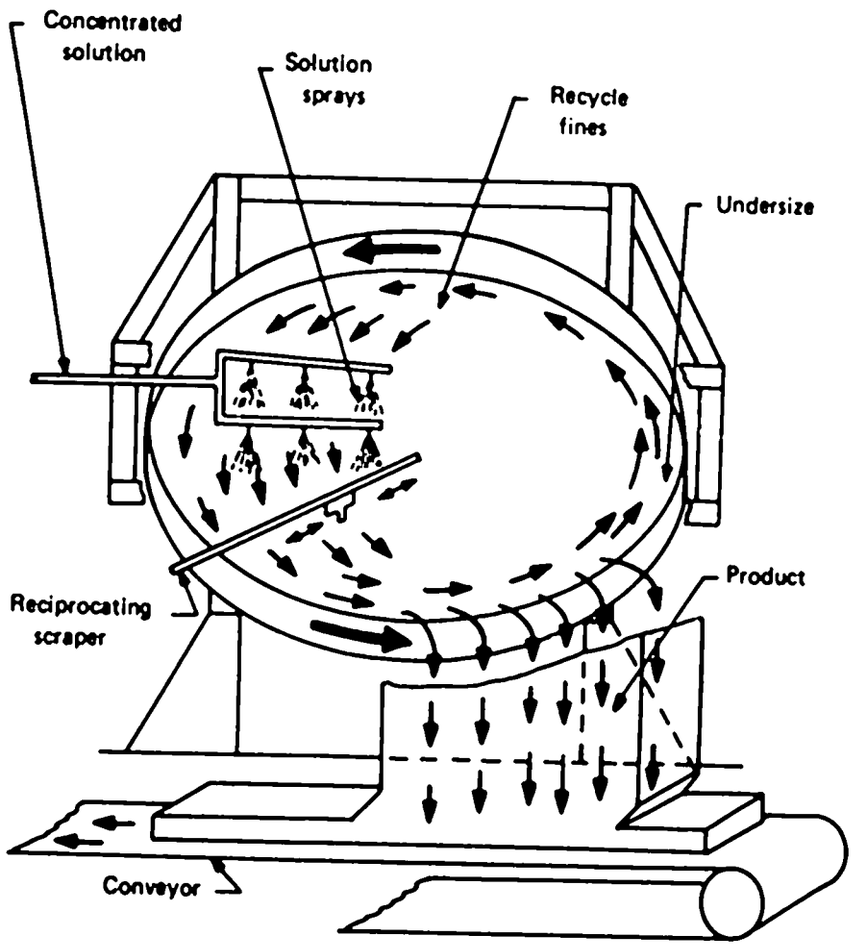

PAN GRANULATOR

Recycle is fed to the pan at the topmost part of the disc. Slurry is usually distributed through spray nozzles on headers over part of the disc.

The pan tends to retain the finest granules in the bed. These fines are carried upward in the corner of the pan until gravity overcomes the centrifugal force. The fines (and the recycle) then fall in a thin layer across the face of the pan. The falling layer passes under the sprays where the sprayed slurry coats the particles. The rolling action afterward tends to round the particle.

Sketch on blackboard

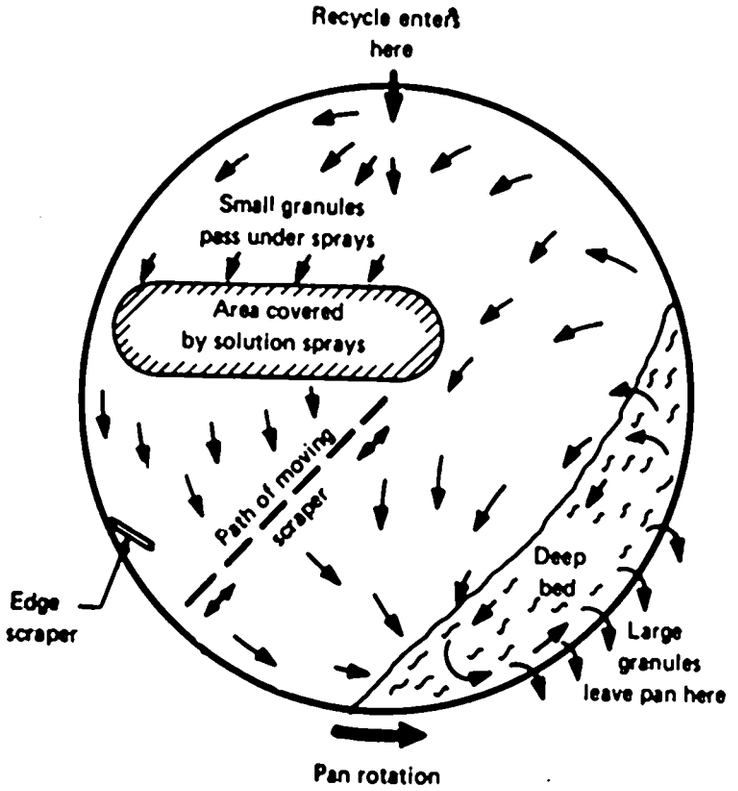

PAN GRANULATOR

A scraper (fixed or reciprocating) is needed to clean the bottom of the disc as some spray passes through the falling layer of fines. Wall scrapers are also needed to continuously clean crust off the side-walls.

The material that discharges from the pan falls through a lump grid onto a belt conveyor or into a chute. The lump grid protects chutes from large lumps such as occasionally scale-out of the pan.

No spargers are used in pan granulators as their presence disrupts the bed action.

In early operation of the pan, variation in the pan inclination or speed may be advisable. Once good granulation is obtained, the angle and speed can be fixed.

17

Operating duties

The operator must match the recycle rate and slurry feed rate to get good granulation. The spray nozzles must be observed frequently to maintain a good spray pattern. Stoppages or poor spray patterns must be cleared by one of several means, such as stopping the feed and steaming out the system or inserting a steam lance in the offending spray nozzle. If these steps do not work, the nozzle should be changed.

The pan should be observed for buildup on the surface or side-walls. When buildup occurs which the scrapers do not remove, a shutdown and manual removal is required.

The discharge lump grid and chute must be cleaned periodically to prevent stoppages. The captured lumps must be broken frequently.

Fume ducts must be periodically cleaned to give continuous dust and fume removal.

18

Lubrication and preventive maintenance

The drive train of the pan requires lubrication which will be specified by the manufacturer. The gear reducers in the train should be checked for oil levels each week. The main bearing must be lubricated frequently.

If a reciprocating scraper is used, lubrication at daily intervals will be needed.

Keeping the bearing and drive train clean of dust and spilled fertilizer will stop fertilizer from getting into the bearings.

The spray nozzles must be cleaned at intervals to remove trash and accumulated solids.

Worn or displaced scrapers will give poor granulation. They should be checked each week.

19

Safety

The hot slurries fed to the pan can cause severe burns. Face shields or splash goggles are needed for eye protection. Rubber gloves are needed for hand protection when handling these slurries.

. Hard hats and safety glasses are required in all plant areas. Dust masks are helpful, especially during s' ··tups.

The rotating pan and moving scraper are hazardous to anyone contacting them. Power to the drives of these elements should be pulled before working on or close to them.

Lumps can fall from the pans, especially during cleaning. Always work from a safe location.

20

Questions

What are the two feed materials used to produce granules? (Fine solid particles and melt)

Is particle size *increased* or *decreased* during the granulation process? (Increased)

Name three types of granulators. (Drum, pug mill, and pan)

What is the main purpose of the support beam in a drum granulator? (To support spargers, distributors, sprays, and their piping)

Which is usually distributed through the sparger in a drum granulator–*ammonia* or *solution*? (Ammonia as a gas)

Does the production rate from a granulation system depend on the *solution feed* or the *recycle solids feed*? (Solution feed– in the long run production rates are equal to solution feeds minus losses in dust systems and spills.)

Does good granulation depend more on the operator's observing *the granulation* or observing *instruments*? (Both are important, but observing granulation and operator experience in granulation is the most important.)

Name two ways of cleaning buildup off the sparger in a drum. (Rodding. Reverse the drum rotation.)

Why is quick action necessary when lumps are discharged? (To prevent a shutdown. Lumps usually come in bunches and will cause spills and shutdowns if not quickly broken into smaller lumps.)

Why are gloves and goggles necessary when working with solutions? (These solutions are usually hot and acidic. Gloves and goggles are good safety protection.)

The mixing or agitation in a pug mill is usually more vigorous than in other granulators? (True)

Why should you not rod in a pug mill when it is in operation? (The rotating paddles fill most of the pug mill and make rodding very dangerous.)

Are *fines* or *large* particles most likely to be discharged from a pan granulator? (Large particles. This is good because the small particles go back under the spray to be coated and form larger particles.)

In which of the following are spargers not used: *pan granulator, drum granulator*, or *pug mill*? (Pan)

Keeping sprays clean is an important operator duty with pan granulators? (True. The spraying pattern is important to the granulation achieved in pans. Some solutions require much attention to keep the sprays clean; other solutions require very little attention.)

21

Slides

This is a slide of a pan granulator. Note the position of the solids feed chute and the solution sprays. Four different fertilizers have been made in this pan. Also, note the fume hood for better working conditions and pollution control.

A drum granulator is used to produce nitric phosphate. Drums are probably the most versatile and widely used of the granulators. Note the lumps at the discharge grate. They should be broken promptly. These were allowed to remain for the slide to be made.

Slide three is a pug mill producing ammonium polyphosphate (a very high analysis fertilizer, 15-62-0). Note the solution feed is an open-end pipe. Also, note the protective shield.

WHAT TO DO	WHAT TO SAY

1

Introduction

Reaction equipment is the heart or most important part of many fertilizer processes. In these processes this is the equipment which controls the chemical composition of the fertilizer produced.

Neutralization is a reaction, but is so widely used in the fertilizer industry that it will be given special treatment in this chapter. This combining of various acids with ammonia is the basis for the produciton of numerous fertilizers.

Reaction equipment is the container or vessel where two or more chemicals are brought together under conditions that will cause them to react to give the desired fertilizer compounds or mixtures. The reaction product may be either a liquid, a slurry, or a solid.

Many times there are numerous processing steps that must follow the reaction to get the fertilizer to the desired condition. However, the reaction determines the chemical composition.

Reaction conditions in many cases are very important. In fact, some reactions will not happen just because the reactants are brought together. Certain conditions of temperature or pressure or contact of the reactants may be necessary. A few very special reactions will not occur without the presence of a material that promotes, but does not enter the reaction. Such materials are called catalysts.

2

Reactors are usually designed to do the following:

1. Proportion the reactants to get the maximum reaction (frequently this means having a small excess of one reactant).
2. Provide intimate contact of the reactants (the amount of contact normally controls the speed of reaction).
3. Keep reactants in contact long enough (retention time) for the reaction to be completed. In a few cases contact for too long a time causes the product to degrade.

4. Cause temperature and pressure conditions that are most favorable to the reaction.

5. Give space for separation of fumes or gases from the liquids or solids.

There is very little uniformity in reactors as to size or type of enclosure. They are specially designed to give the desired reaction conditions for the particular process. Frequently specialized materials are necessary because of corrosive conditions, high temperatures, or high pressure.

Some examples are urea reactors which will withstand the high pressures (200 atmospheres) necessary to get the desired reaction. These reactors are relatively large to provide sufficient retention time to complete the reaction.

A nitric acid converter (reactor) on the other hand is very little more than an enlargement in the line. However, it must be of special materials to withstand temperatures in excess of 1700° F. It must also support and protect the expensive platinum catalyst required to cause the reaction.

Digestion reactions in which acids dissolve phosphate rock are basic to the production of superphosphates and nitric phosphates. The materials of construction must be corrosive resistant because of the acids present. The TVA cone mixer for production of superphosphate is an example of how compact a reactor can be in some instances. A cone 18 inches in diameter and 27 inches high can produce 40 tons per hour.

On the other hand the combustion chamber (reactor) for the calcium metaphosphate process is 11 feet in diameter and 40 feet long for a production rate of 10 tons per hour.

The burning of phosphorus under controlled conditions is the reaction step in the production of electric furnace phosphoric acid. High temperatures and corrosive conditions are present. At one time it was considered necessary to construct these vessels of acid-resistant masonry; now water-jacketed stainless steel is widely used.

3

Neutralization

Neutralization reactions can be controlled to produce numerous fertilizers—such liquids as nitrogen solutions, clear ammonium phosphate solutions and even higher concentration ammonium phosphate slurries. Also, solids are produced, such as ammonium polyphosphate and ammonium phosphates.

Two things make the control of neutralization reactions relatively easy: (1) Bubbling gaseous ammonia through a pool of acid is an easy way to get good contact between these reactants; and (2) Measuring the pH of the resulting solution is an excellent guide to controlling the proportioning of the reactants.

Sketch on blackboard

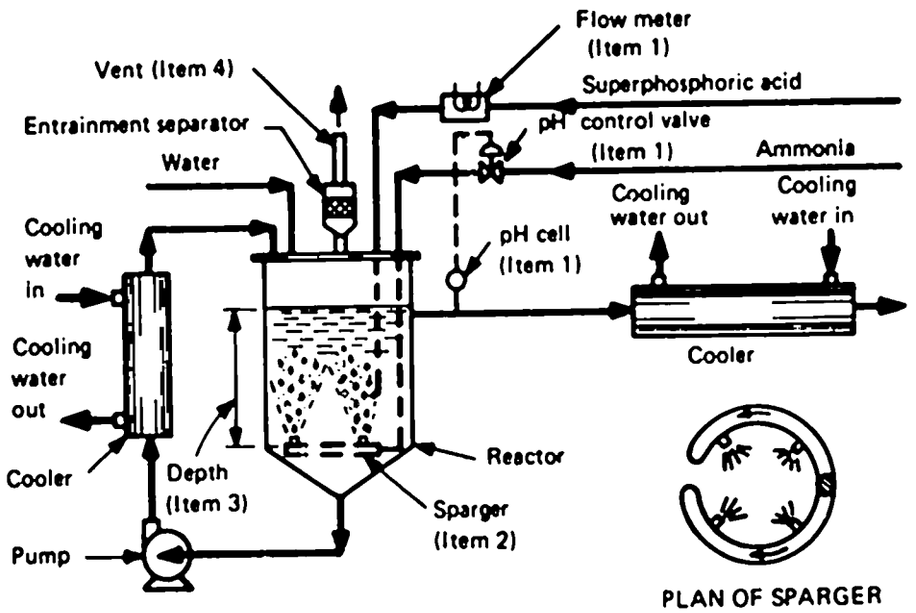

If more than one acid is used, it is necessary to provide flow measurements and controls for proper proportioning (item 1). As previously mentioned, if only one acid and ammonia are used, pH measurements can be used to control (usually automatic) the ammonia additions. Temperature can also be used as the control measurement.

Intimate contact of the reactants is usually obtained by sparging (item 2) ammonia into a pool of acid. In some cases an open end pipe is an adequate sparger. However, the most common sparger is one or more pipe loops which have numerous small (usually about 1/8-inch) holes drilled in the pipe. This allows many small bubbles of ammonia to rise through the entire volume of acid.

Retention time is determined by the depth (item 3) of acid. Normally this is not much of a problem since acid and ammonia react very quickly.

Cooling is frequently included in the reaction system since much heat is released when neutralization takes place (both temperature and pressure can affect the degree of ammoniation that occurs). In some cases the heat resulting from the neutralization reaction is utilized to concentrate the solution that is produced by the reaction.

The cooling can be provided in several ways:

1. By using liquid ammonia as a feed and utilizing the cooling from the vaporization of the ammonia.
2. By circulating water or other cooling medium through cooling coils installed inside the reactor.
3. By applying surface cooling to the reaction vessel.
4. By pumping the reactor fluid through an external cooler and back to the reactor.
5. By adding water directly into the reacting liquid.

Most neutralizers are constructed to operate at approximately atmospheric pressure. However, in a few instances these reactors are designed to operate under appreciable pressure. Water from the acid is normally given off and this water plus the inerts usually present in ammonia will build pressure in the neutralizer if they are not vented (item 4).

Neutralizers are usually relatively large. This is to allow separation of the steam and inerts from the reaction solution. Entrainment separators or scrubbers often are used on the gases vented from neutralizers to reduce pollution or to recover valuable product (usually ammonia).

4

Some neutralizers are staged. This means there are several reaction vessels with a part of the reaction taking place in each vessel.

A peculiarity of ammoniating some acids is that much ammonia is needed to change the pH of the acid only a small amount in the lower pH ranges. However, as the pH increases much less ammonia is required to change the pH. Staged neutralization can reduce the loss of ammonia in such a reaction.

5

Operating duties

Close attention to instruments is important to the reactor operator. He must know the desired process conditions and use his instruments to maintain these conditions. His mistakes are usually expensive in either downtime or bad product.

Even though he places much dependence on instruments, the good reactor operator knows there are crosschecks to insure against instrument errors. An example is that a faulty pH reading can be detected by watching reaction temperatures (a low pH should be accompanied by a low temperature). Pump pressures and valve positions are good crosschecks on flow instruments.

A neutralizer operator should check several samples per shift with a laboratory type pH instrument. This will allow him to have confidence in the pH meter installed in the process. These meters are subject to frequent failure. Specific gravities of samples are often used to determine concentrations of the reacted fluid.

Sampling of many reacted materials calls for special precautions because the reaction solution solidifies in the sample lines. Usually these sample points are supplied with two valves with a steam connection between the valves. The operator opens valve No. 1 and No. 2 to steam through the sample point discharge. He then shuts valve No. 2 and opens valve No. 3 to allow steaming into the process line. Closing valve No. 1 and opening valve No. 2 allows the sample to flow.

Sketch on blackboard

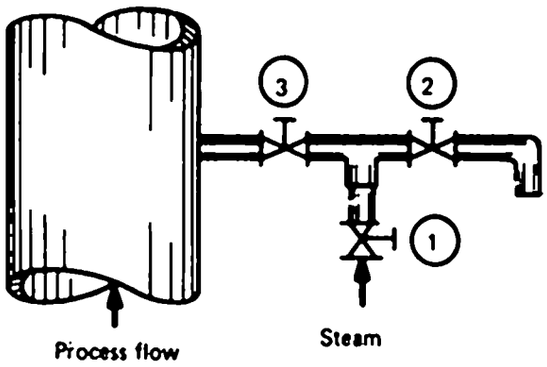

Of course the good operator observes normal sampling precautions of allowing sufficient flow to flush out the sample line before he catches the sample. Also he wears eye protection and protective gloves.

6

Shift duties

Always look for leaks when checking the reaction equipment. Pump packings, valve stems and sample points are frequent leak points.

Many times pump packings are water cooled. Failure to keep the water flowing can burn the packing out within a few hours of operation. Too much water will leak into the process fluid and dilute it. Pump seals (used in place of packing) also are often water cooled and need attention.

Neutralizers often have a water seal on the gas vent. The operator must restore this water seal when pressure surges cause it to blow. Observation of the vent stack will tell an operator when the seal is blown; so will the reactor pressure.

The operator should check the flow of coolant to and from the cooling system associated with the reactor several times during the shift.

Vibration of the reactor during operation can indicate a broken ammonia sparger. The reactor should be shut down for repairs when this happens.

The operator should be alert for ammonia leaks as he makes trips through the plant. Ammonia's distinct odor makes its detection easy.

Pressure drops across entrainment separators and flows of fluid from the separator should be checked each shift (if the entrainment separator is inside the top of the reaction vessel the fluid flow cannot be checked). Increased pressure drop indicates stoppages and decreased pressure drop indicates a damaged separator.

Some fluids from reactors solidify easily. Control valves often become stopped with these fluids. Provisions to steam the line are usually supplied, but even playing steam on the outside of the valve may clear the stoppage.

The operator usually becomes aware of these stoppages when his reactor level begins to rise even though the valve is open to a position that should prevent this from happening (sometimes the level instrument can be faulty).

Reactor operators (like all other operators) should leave their area clean at the end of the shift.

Startup is a time when any good operator's skill is most apparent. This is particularly true of the neutralizer operator. The violence of the neutralization reaction can become dangerous if the operator tries to add ammonia rapidly to a large quantity of acid. Heavy vibration of the neutralizer and building steel certainly indicates poor operation.

The necessity of having enough liquid pool to cover the openings in the ammonia sparger causes this problem. One answer is to start the reaction with an ammonia water solution in the reactor. Another answer is to add ammonia very slowly.

Another start-up problem occurs in neutralizers if a steam purge is not applied to the ammonia sparger when the neutralizer is shut down and again when it is started up. Solution will back up into the sparger and cause stoppages.

7

Periodic inspections

When the reactor is off all instruments should be checked to see they zero properly.

Occasionally the reaction vessel should be checked for corrosive damage. The sparger in a neutralizer is particularly vulnerable to corrosion (special materials of construction are often used for sparger fabrication).

Protection of catalyst, especially when not in operation, is important in those reactors that require catalyst. Catalyst may become ineffective (catalyst poisoning) if dirt or some metals come in contact with it. It is the operator's duty to keep this from happening.

8

Safety

The major danger with reactors is losing control of the process and allowing reactions to become dangerously violent. Stopping the flow of reactants will stop the reaction if this should happen.

Sprays and drips of acid are possible hazards. Sampling must be done with proper care and using protective equipment.

Dangers of moving equipment are present at pumps, control valves, and agitators.

Surface temperatures of reaction vessels are sometimes hot enough to cause injury if touched.

Explosive mixtures of air and ammonia must be avoided in some reactors during startup. The nitric acid converter is an example.

9

Preventive maintenance

Replacement of the pump packing when it is needed prevents lost operating time. The experienced operator can tell by the position of a packing gland when the packing should be replaced.

Regular corrosion inspections of spargers and of the interior of reaction vessels by both operators and maintenance people is desirable. Pressure reactors should be hydrostatically tested on a predetermined schedule.

Operating questions

Chemical composition of the fertilizers are often determined where? (In the reactor)

What two feed materials are brought together in a neutralization reaction? (Acids and ammonia)

A catalyst promotes reaction but does not enter into the reaction. (True)

Spargers are used to give intimate contact or provide retention time? (Contact)

All reactors operate under high pressures. (False - Some do and some don't)

A nitric acid converter can be considered to be a reactor. (True)

Digestion reactions, where acids dissolve phosphate rock, are not very common in the fertilizer industry. (False - Superphosphate and nitric phosphate processes use digestion reactions.)

Neutralization reactions are used to produce one kind or numerous kinds of fertilizers? (Numerous kinds)

What is the most common method of control used in neutralization reactors? (pH)

Heat is taken up or released by neutralization reactions? (Released)

The term staged reactors refers to several reactors each doing a part of the reaction. (True)

Instruments are important or not very important to reactor operators? (Important)

Instruments are always correct. (False)

Neutralizer operators often sample to check what? (pH - Also specific gravities less frequently)

If the seal on the vent stack of a reactor is blown there will be a dense stack discharge or very little stack discharge? (Dense)

Lack of vibration of the neutralizer during the startup is a mark of a good operator. (True)

If the entrainment separator is corroded away, the pressure drop will increase or decrease? (Decrease)

You should turn purge steam into the ammonia sparger for what reason? (To keep solution from backing up in the sparger and solidifying)

The major danger with reactors is losing control of the reaction. (True)

How can you regain control of the reaction? (Stop the flow of reactants)

11

Slides

This slide shows an ammonia sparger in place in a neutralizer.

This shows a combustion chamber (reactor) of a phosphoric acid unit. (Approximately 10 tons per hour production)

This slide shows a liquid fertilizer reactor. (4 different fertilizers–approximately 20 tons per hour production)

WHAT TO DO	WHAT TO SAY

1

Introduction

Usually concentrators are considered to be equipment which is designed to remove water from a liquid. The resulting liquor is considered to be more concentrated. It has the same amount of the desired material, but less water to dilute or weaken the desired material.

Equipment that concentrates solids is not normally classified as concentrators. However, filters (chapter 11) and centrifuges (chapter 17) are concentrators when the solids are the desirable material in the separation. Removal of the liquid increases the concentration of the solids. Increased concentration of the liquid is negligible since normally the amount of solids in the original solution is small.

Settling devices or clarifiers also act as concentrators of solids when the solids are the desirable product. Since these devices are not discussed elsewhere in this course, they will be discussed briefly in this session.

Concentrators that remove water from liquor usually do the job by evaporation. A salt pond or lake can be used to illustrate evaporation. Over a period of time the air which is in contact with the surface of the pond will take up water. This reduces the size of the pond and makes the water saltier and saltier (more concentrated). Hot sunshine or wind speeds this evaporation procedure.

A pond can also be used to concentrate when it holds a liquid long enough to let solids settle out, and the settled solids are then reclaimed for use.

Many chemical operations actually concentrate; for example, drying makes the fertilizer slightly more concentrated. Nodulizing concentrates the furnace feed material slightly by driving off volatile materials. However, a process is considered to concentrate only when large quantities of the material to be removed are present in the feed material.

2

Blackboard

Some examples of concentrating in the fertilizer industry:

1. Concentration of fertilizer solutions for sale or for feed to granulation processes.
2. Washing of phosphate sand to increase the phosphate content.
3. Flotation to concentrate powdery Florida pebble.
4. Concentrating wet process phosphoric acid to wet process superphosphoric acid.
5. Settling of phosphorus from sludge.
6. Pollution recovery systems such as clarification to recover phosphate solids from cooling water.

3

Liquid concentrators

Concentrators for removing water from liquids do the job by vaporizing the water. The liquor is heated to change the water to a vapor and some means of removing the water is supplied.

Two primary reasons for concentrating are: (1) to make the process work or to reduce the size of process equipment required; and (2) to reduce the requirement for drying solids since this is an expensive process.

Frequently the concentrator is operated at a vacuum because the water can be changed to a vapor at a lower temperature when it is in a vacuum. As an example, this change takes place at 212°F. at atmospheric pressure as compared to only 161° F. at 9.9 inches of mercury absolute pressure (20 inches of mercury vacuum).

This is one typical concentrator for fertilizer solutions.

Sketch on blackboard

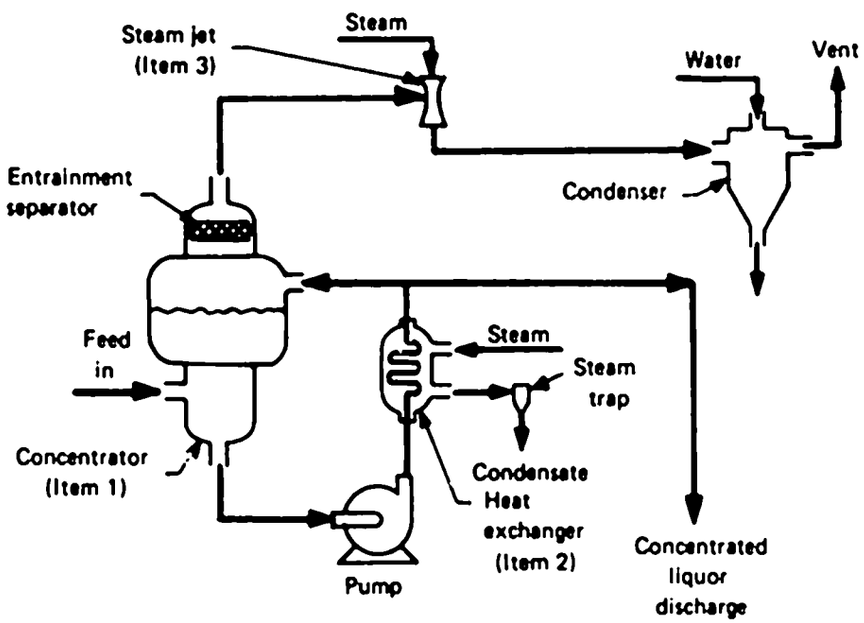

The concentrator vessel (item 1) contains a pool of the liquor to be concentrated. Evaporation (water removal) from the pool is related to the surface area of the liquid pool. More evaporation is obtained with a bigger surface area.

Steam in the shell of a shell and tube heat exchanger (item 2) located on the circulation leg supplies the heat required. A pump is used for circulation to give more uniform heating of the liquor and better heat transfer in the heat exchanger.

Vacuum is applied to the liquid surface to reduce the temperature needed. Water that has been vaporized is removed by the steam jet vacuum ejector (item 3) that creates the vacuum in the evaporator.

Blackboard

The concentration of the product liquor depends on five things:

1. Concentration of the feed liquor.
2. Temperature of the liquid pool.
3. Vacuum above the liquid pool.
4. Feed rate to the concentrator.
5. Draw-off rate from the concentrator.

4

Other types of concentrators take advantage of the principle that liquids evaporate faster when a thin film of the liquid is spread over a hot metal surface.

One concentrator of this type is the falling film evaporator.

Sketch on blackboard

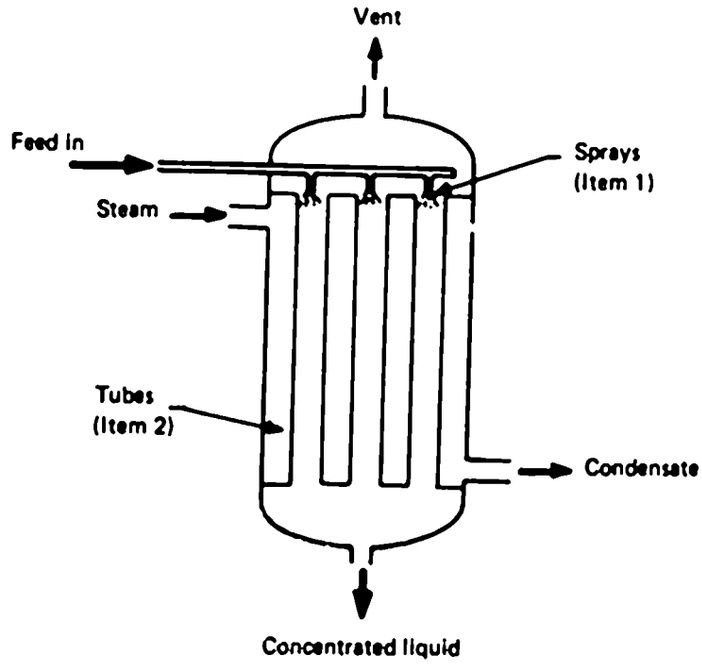

This type evaporator has a spray system (item 1) or a distributor that causes the liquor to flow down the walls of the tubes (item 2). Such a flow gives a thin layer of the liquor on a large area of metal surface. Heat (steam) in the shell is supplied to the outer surface of the tubes.

Wiped film evaporators apply the same principle as the falling film evaporators. The major difference is that the wiping action supplies a thinner film than the flowing liquid in the tubes of the falling film evaporator. These thin film evaporators have an advantage with those products which degrade rapidly when they are heated.

One use of submerged combustion evaporators is the concentration of wet-process acids.

Sketch on blackboard

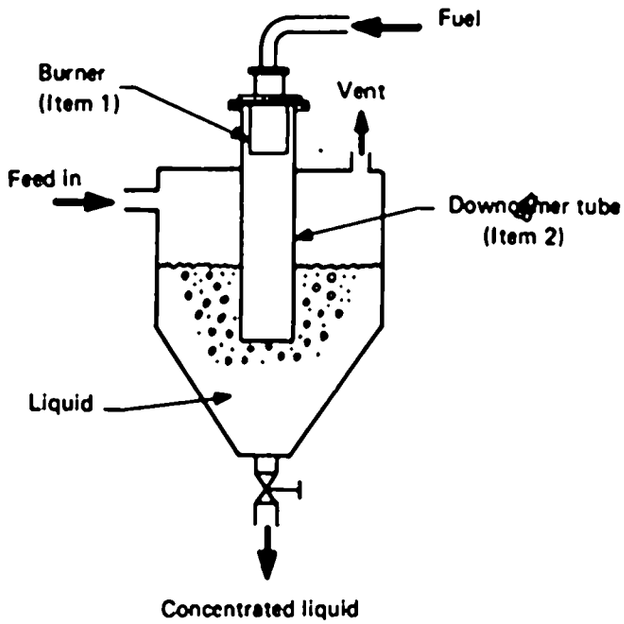

These evaporators have a gas burner (item 1) to supply heat. The hot combustion gases from the burner are directed below the surface of the liquid pool by a tube (item 2).

The hot gases bubble through and heat the pool of liquid. Fans are normally used to remove the hot gases and the water that is evaporated.

5

Solid concentrators

Settling devices for the concentration of solids may be nothing more than a tank or pond where the liquid is allowed to stay long enough for the solids to settle. The solids are then recovered for reuse.

Clarifiers are an adaptation of settling tanks. They are large diameter vertical cylinders. Every effort is made to avoid agitation of the solids.

Sketch on blackboard

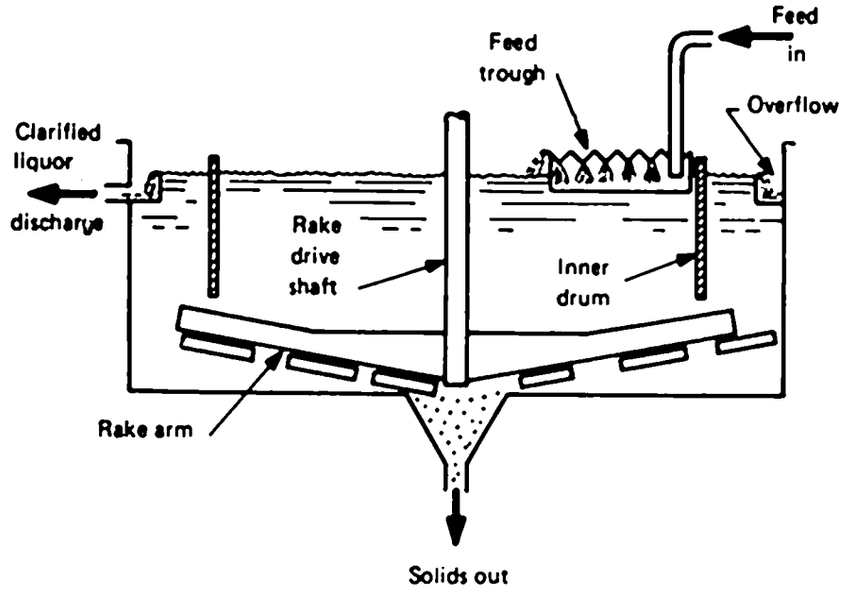

A large rotating rake and paddle device gently moves the collected solids to a central discharge. The rake rotates very slowly to avoid resuspending the solids.

The feed to the clarifier is distributed to avoid any stirring action. Also the clear liquid discharges through many saw-toothed openings around the outer edge of the clarifier. These many small discharge openings keep light solids from being carried out in the liquid discharge.

Quite often materials (flocculants) which speed up the rate of solids settling are added to the liquid being clarified. These settling agents usually work by sticking several particles together. The larger, heavier particles formed in this manner settle faster.

6

Operating duties

The operator has to depend on instruments to control most concentration processes. He must know the desired operating conditions (temperature, pressure, level, flow, etc.) and use his instruments to maintain these conditions. As usual, the good operator knows what conditions to crosscheck to confirm that instrument readings are right. (For instance two temperatures in the liquid pool should be the same.)

Steam is usually used at a high rate to provide the heat required to evaporate water to concentrate the liquor. The good operator keeps a close

watch on the operation of the steam traps since much money can be wasted by blowing live steam through the traps.

Since evaporators are such large users of steam, a measurement of the steam flow is often provided. Of course, watching this flow is the best indication of whether the steam traps are doing their job.

Concentrated liquor results in many stoppages and for this reason the operator must be alert for changes in level or loss of flow or other indicators of stoppage.

Many times stoppages result from cooling of the concentrated liquor. To prevent this the operator heats the lines before starting a solution flow, and he blows the lines clear with air or steam after they have been used. He also has steam tracers or steam jackets kept in good operating condition.

7

Shift duties

All operating conditions must be checked frequently throughout the shift. The formation of crystals (salting) in the evaporator can occur when the proper operating conditions are not maintained. A product of the wrong concentration is another result of poor operation.

Cooling water flow to pump packings or seals is important because of the hot solutions handled. Proper packing adjustment should be checked each shift to see that any solution leaks are stopped.

Solution circulation must be maintained. In some cases sight glasses are provided so the operator can actually see the circulation. Temperatures, flows, or pump pressures are other circulation indicators.

If the entrainment separator is outside the evaporator vessel, the operator should check the entrainment drainage several times each shift. He should also check the vent to see there is no rain from the vent (loss of liquid entrainment).

Sampling of feed and product solution is sometimes desirable to insure proper operation. Maintaining proper conditions is sufficient assurance in many processes.

An alert operator keeps a close watch on solution levels because of the possibility of stoppages in solution lines. Many times the good operator sees a steady change in the level that should not be occurring. Quick action in steaming out line stoppages can avoid plant delays.

Clarifier operators should pump solids on a regular schedule to avoid overloads on the rake arms. Some solids should be left in the clarifier at each pumping to insure that the solids pumped are as dry as possible.

Vacuum ejectors must be checked several times per shift to be sure the proper steam and water pressure is being applied.

8

Occasionally a leak occurs on vacuum equipment and makes it impossible to keep the proper pressure. Vacuum leaks are difficult to find. However, a persistent operator with masking tape and a soap solution will check flanges, pipe connections, and welds until he finds the leak.

Another occasional problem is weak solution even when all operating conditions are right, including the proper strength feed solution. This can happen if there is a steam leak into the liquor. Usually the equipment has to be shut down and the heat exchanger pressure tested to determine if this is the trouble.

9

Safety

Some nitrogen solutions are explosive at elevated temperatures and high concentrations. Pools of such liquids are usually kept to very small volumes.

Concentrating in general is not very hazardous. Pumps or agitators present slight moving equipment hazards. Steam or solution leaks can cause burns.

Sampling many concentrated solutions requires protective equipment and care.

10

Preventive maintenance

Distributors and spray equipment should be checked whenever the evaporator is open. Pump packings and mechanical seals should be inspected during down times. Experienced operators can tell by looking when a pump packing should be repacked.

11

Questions

What is usually removed from the liquid to increase its concentration? (Water)

This removal is called *neutr lization* or *evaporation*? (Evaporation)

Clarifiers act as concentrators when the solids are recovered for use. (True)

Use of concentrated solution in a granulation process will reduce the size of the dryer required. (True - It will also usually reduce the amount of recycle required. This allows the use of smaller, cheaper equipment.)

Vacuum increases or decreases the temperature required for evaporation (Decreases)

More surface area of the liquid pool gives *more* or *less* evaporation? (More)

Falling film and wiped film evaporators both take advantage of increased evaporation from a thin layer of liquid. (True)

What is an evaporator called that discharges hot air from a burner underneath the surface of a liquid pool? (Submerged combustion)

What do flocculants do? (Speed up settling by sticking several small particles together)

Use of too much *what* is probably the most costly operator error in evaporation? (Steam)

Concentrated solution lines are often steam traced. Why? (True - To prevent cooling which solidifies the solution)

What is usually indicated by a rapid increase in the concentrator level? (A stoppage in the discharge line)

12

Slides

Slide No. 1 is a picture of the circulation inside a vacuum evaporator.

Slide No. 2 is a steam ejector and its condenser. They are used to pull the vacuum on an evaporator. Water removed from the liquor is condensed in this system.

Slide No. 3 is a clarifier in operation to settle phosphorus containing solids from cooling water used in phosphorus condensers. This recovery system is primarily to prevent stream pollution, but the solids recovered are valuable.

WHAT TO DO	WHAT TO SAY

1

Introduction

Actually many definitions of refrigeration could be given, but specifically it is the process of removing heat from a space or substance to reduce its temperature and transfer that heat to another space or substance.

Before the advent of mechanical refrigeration, water was cooled by storing it in semiporous earthenware jugs so water could seep through and evaporate. The evaporation carried away the heat and cooled the water.

Also, heat was removed by the use of ice in or around the substance to be cooled. The heat of the substance was absorbed by the melting ice.

As technology improved in many areas of manufacturing, increasing demands were made on the ability to remove or eliminate large quantities of heat. Hence, a mechanical means of refrigeration evolved.

2

Mechanical refrigeration is possible because of volatile liquids which under certain conditions will boil at low temperatures and in the process absorb heat from surrounding objects.

Sketch on blackboard

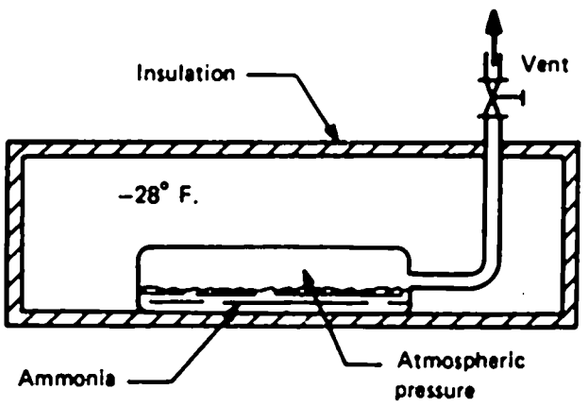

Liquid ammonia (boiling point of -28° F. at atmospheric pressure) in a metal flask with a valved vent line is placed inside an insulated box.

At a temperature of 80° F. the pressure in the flask would be 138.3 psig and no boiling would occur.

If the vent line is opened, reducing the pressure in the flask to atmospheric, boiling will commence which will lower the temperature of the liquid ammonia to -28° F. Thus, the temperature of the interior of the box will approach this temperature also.

This application of refrigeration is utilized in several areas of fertilizer production, particularly in the ammonia plant, but not to the extent of reducing temperatures to -28° F. By the use of accurate pressure control instrumentation, temperatures can be adjusted to any temperature desired.

3

Since there is a limit on the amount of refrigeration available by this method, other methods of obtaining refrigeration must be utilized. By the addition of a compressor, a condenser, and an evaporator, a closed system is formed in which the refrigerant can be reused.

Sketch on blackboard

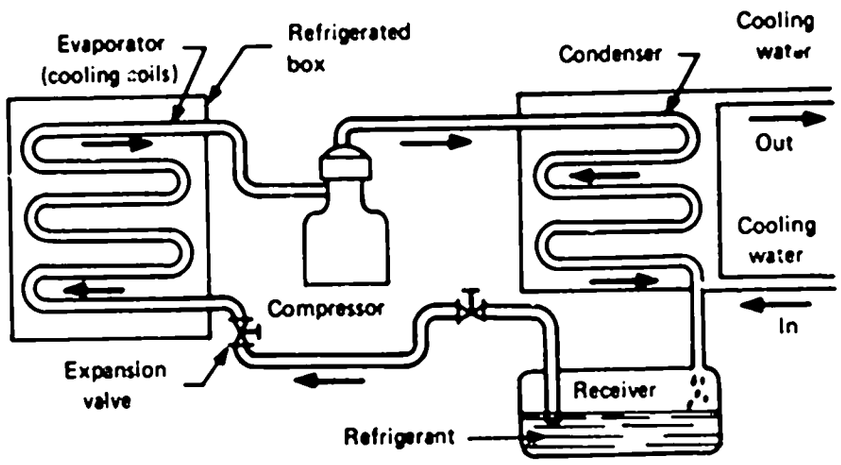

The refrigerant flows from the expansion valve through the evaporator (cooling coil) where it absorbs heat and becomes a gas. From the evaporator the gas flows to the compressor where the pressure on the system is increased.

The compressor discharges into the condenser coils which are usually air- or water-cooled and serve to remove the heat accumulated in the evaporator. As the heat is removed, the gas returns to the liquid state and is collected in the receiver.

From the receiver it flows to the expansion valve to repeat the circuit.

4

Operations

Compressors are used for one reason only—to save the expanded liquid for reuse.

Explain different types of compressors

Many types of compressors are used for this purpose. Most common are the reciprocating and the centrifugal types.

5

Sketch on blackboard

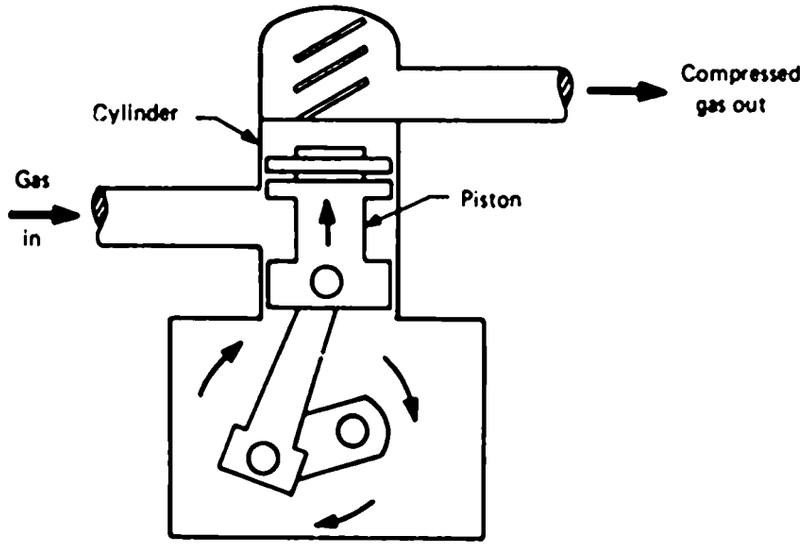

Reciprocating

A reciprocating compressor consists of one or more piston and cylinder combinations. The piston moves in a back and forth motion to draw gas into the cylinder on one stroke and to compress and discharge it to the condenser on the return stroke.

6

Sketch on blackboard

A centrifugal compressor has a single or multistage high-speed impeller to set up enough centrifugal force within a circular casing to raise the pressure to the point where condensation takes place.

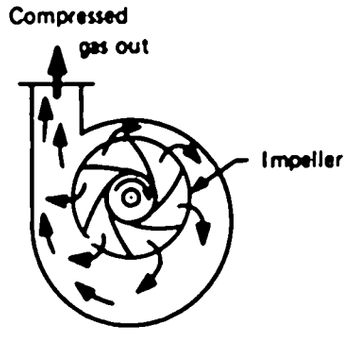

Centrifugal

7

Any type of driver—gas engine, gas turbine, electric motor, steam turbine, etc.—can be used on all types of compressors.

8

Condenser

The purpose of the condenser is two-fold. First to remove the evaporator heat plus the heat of compression from the refrigerant; and second, to convert to liquid all the refrigerant vapor delivered by the compressor.

Refrigeration condensers may be air-cooled or water-cooled. In the latter type many variations will be found. The shell and tube, the shell and coil, and the double pipe are the most common examples.

Sketch on blackboard

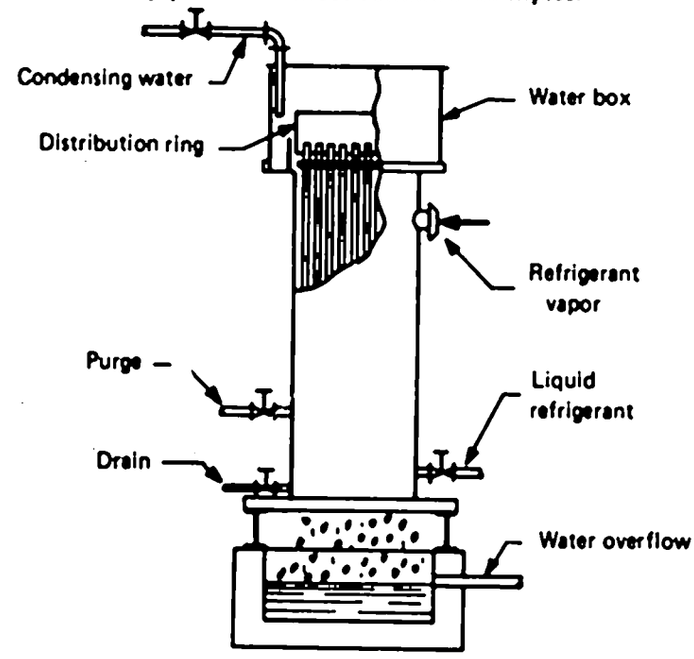

Vertical shell-and-tube condenser

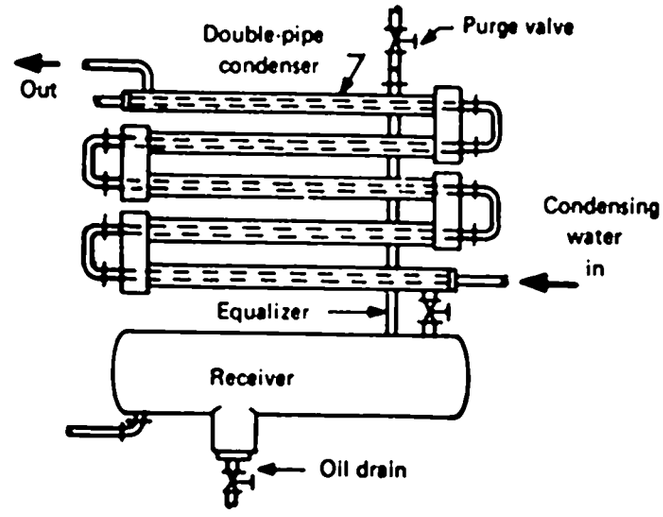

Double-pipe condenser has one continuous loop, with refrigerant on outside, cooling water on inside.

9

Evaporators

The evaporator is that part of the system where the liquid refrigerant is changed into a gas by the absorption of heat.

Evaporators are classified according to the type liquid feed as "dry" or "flooded" evaporators.

A flooded evaporator is arranged with a tank or large space above the coil so that the coil is submerged in the refrigerant.

Sketch on blackboard

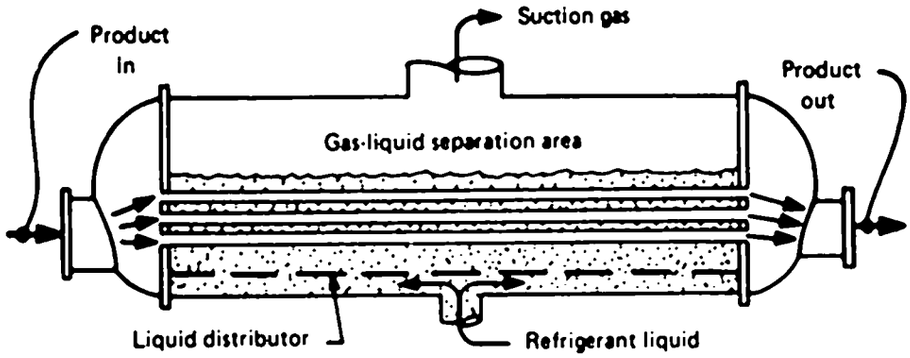

Typical flooded-shell and tube evaporator

The dry evaporator has a control device that admits only enough liquid refrigerant to be completely evaporated by the time it reaches the outlet coil.

Sketch on blackboard

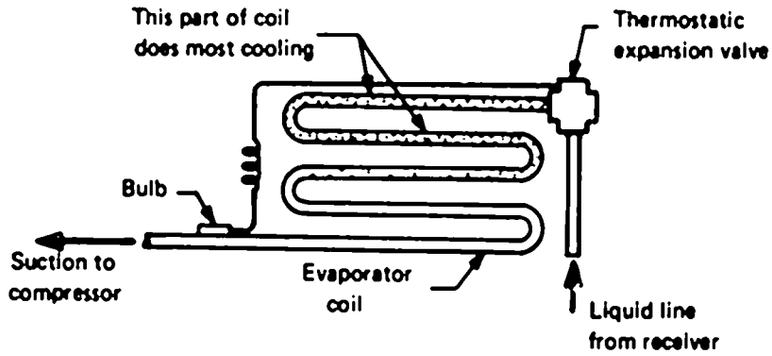

Prime-surface evaporator coil is bare pipe or tubing

10

The uses of refrigeration in the fertilizer industry are many and varied. Some of these include:

1. The removal of heat from solids by using refrigerated air instead of air at ambient temperature to increase the capacity of the cooling vessel.

2. The addition of liquid ammonia direct to a reaction vessel to supply nitrogen for the product and cooling by the excess ammonia flashed off.

3. Dehumidification purposes in fertilizer storage areas.

4. Storage of gaseous raw materials as liquids by lowering the temperature to the condensation point. Examples–methane, propane, butane and ammonia.

5. Electric motors are often cooled to increase power and prevent overloads.

6. Removal of moisture to provide dry air for instrumentation.

11

Operating duties

Refrigeration equipment in a fertilizer plant must be kept under close observation. Erratic operation or varying production rates in areas where refrigeration is required can alter stable operating conditions quickly.

Some points at which changes in pressure or temperature might be indicative of potential upsets in the system are:

List points on blackboard

1. *Compressor suction*––A high temperature expands the gas and reduces the amount of gas sent to the condenser, thus reducing the cooling capacity of the system. If the temperature were sufficiently high, damage to the compressor could result.

Low suction pressure could allow liquid refrigerant to reach the compressor where it could also do damage. Frost on the suction line may indicate low suction pressure.

2. *Compressor discharge*––Excessively high temperature could indicate insufficient cooling water through the cylinder jackets.

Pressure above the normal range indicates inefficient operating conditions such as lack of cooling water, water that is too warm or excessive amounts of non-condensable gases in the system. It also shows when condensing surfaces are scaly or dirty.

12

If filters are used in the system, inspect them frequently and replace before they become obstructed with dust.

The coils of the condenser and evaporator occasionally need cleaning. Use a soft brush or vacuum cleaner on the finned-type coil.

Sometimes pressurized air or water in the opposite direction of the system flow can be used. Wire brushes are suitable for cleaning water-cooled condensers.

Note unusual noises or vibrations in operating equipment.

Be familiar with how the temperature of a critical area feels to the hand. Potential trouble can often be located this way; for example, a leaking suction valve will cause the cylinder head to be hotter than normal.

13

Frequent checks should be made on the compressor for any indication of overheating of bearings and cylinders, particularly after maintenance or repair work.

Lubrication

The proper oil level should be maintained in the crankcase at all times. Any unusual accumulation or consumption of oil should be reported immediately.

Be sure the forced-feed lubricating system is operating satisfactorily and oil pressure is sufficiently high.

Control oil temperature to the recommendations of the manufacturer.

Maintain the proper level in the receiver (refrigerant reservoir).

Purge inerts (non-condensable gases) from the condenser and receiver as necessary.

14

Some of the dangers to be concerned with are (1) explosions, (2) fires, and (3) toxic effects from the gases used in refrigeration system.

These hazards can result from ruptured lines, leaking connections, or damaged compressors.

If such an event occurs, it is the operator's responsibility to shut down the equipment and isolate the damaged area by closing valves as rapidly as possible.

Stress this fact

The operator should wear an appropriate gas mask while performing these operations.

15

Safety List on blackboard

Precautions to be taken before making any repairs in the system:

1. Tag switch or control valve of electric motor-driven or power-operated equipment so it will not be started while repairs are being made.
2. Before any part of the system is opened, be sure the pressure has been relieved.
3. If in question, test atmosphere for explosive conditons.
4. Wear or at least have available the proper type of gas mask.
5. Purge that part of the system which has been opened to the atmosphere before placing in service again.
6. When closing valves or installing blanks, don't trap liquids in an isolated line or vessel. Pressure can increase to the point where the line or vessel will rupture.

16

Questions

What is mechanical refrigeration? (Cooling or transfer of heat by means of equipment such as compressors, condensers, evaporators, etc.)

What type of liquids are used for refrigerants? (Volatile liquids–liquids with low boiling points)

Name one way to control the temperature of a substance being cooled. (By adjusting the pressure of the refrigerant to produce the desired temperature)

What is the purpose of the compressor in the refrigeration system? (To save the expanded gas for reuse by increasing the pressure on the gas to make condensation possible)

What is the dual purpose of the condenser? (To remove the heat from the system and convert the refrigerant vapor to a liquid)

What is the purpose of the evaporator? (To absorb the heat in the area where cooling is required)

17

Slides

This slide shows a complete refrigeration unit.

The second slide shows frosting on the compressor suction line. Frosting usually indicates low suction pressure.

WHAT TO DO	WHAT TO SAY

1

Introduction

The cost of industrial maintenance is an increasingly important one in fertilizer plant operations.

In many companies maintenance has been and still is considered a necessary evil that must be tolerated.

This attitude causes a downgrading of maintenance functions leading to:

List on blackboard

1. Excessive machine breakdowns
2. Frequent emergency work
3. Domination of maintenance by production
4. Lack of an equipment replacement program
5. Insufficient preventive maintenance
6. No planned selection of maintenance supervisors and managers
7. Inadequate training of maintenance personnel
8. Poor shop facilities

The principles and practices which have been used and proved in production have not often been extended to maintenance.

The fact that few or none of the following procedures are regularly employed in fertilizer plants indicate the lack of management techniques in maintenance:

List on blackboard

1. Organization planning
2. Written procedures
3. Performance measurement
4. Planning and scheduling
5. Training programs
6. Motivation techniques
7. Cost controls

2

Recent years have witnessed an increasing awareness of the large contribution which maintenance labor makes to the total cost of doing business.

As plants become more automatic, there is a continued shift of workload from the direct labor force to the maintenance labor force.

In order to stay competitive, plants have to place more and more effort on controlling these costs.

One method of doing this is the preventive maintenance program.

3

Emphasize to class

Preventive maintenance is the planned maintenance of plant and equipment resulting from periodic inspections.

Its purpose is to minimize breakdowns and excessive wear and tear resulting from neglect.

In a way, we could call preventive maintenance, productive maintenance since its purpose is to avoid breakdowns and prevent excessive wear of equipment.

Properly conducted preventive maintenance is a cost-reduction tool.

4

Objectives of preventive maintenance

List on blackboard

The objectives of a preventive maintenance program are:

1. Reduce production downtime
2. Better conservation of machinery and equipment
3. Reduced overtime cost
4. Fewer large-scale repairs
5. Reduced cost of repairs
6. Reduced products that do not meet specification
7. Identification and replacement of equipment with excessive maintenance costs
8. Improved safety conditions

5

Operating a program

Starting a successful preventive maintenance program may require from several months to several years.

First there must be an accumulation of historical repair data for machinery and equipment.

An analysis of past troubles will reveal whether corrective maintenance is needed.

It will also give an indication of the inspection frequency required to minimize repair.

6

Work order

For a preventive maintenance program to work, a maintenance request or work order must be written to cover all repair work.

It is from this work order that records are kept, schedules are made, and priorities are established.

The greatest amount of these orders should come from maintenance control activity as a result of scheduled maintenance inspections.

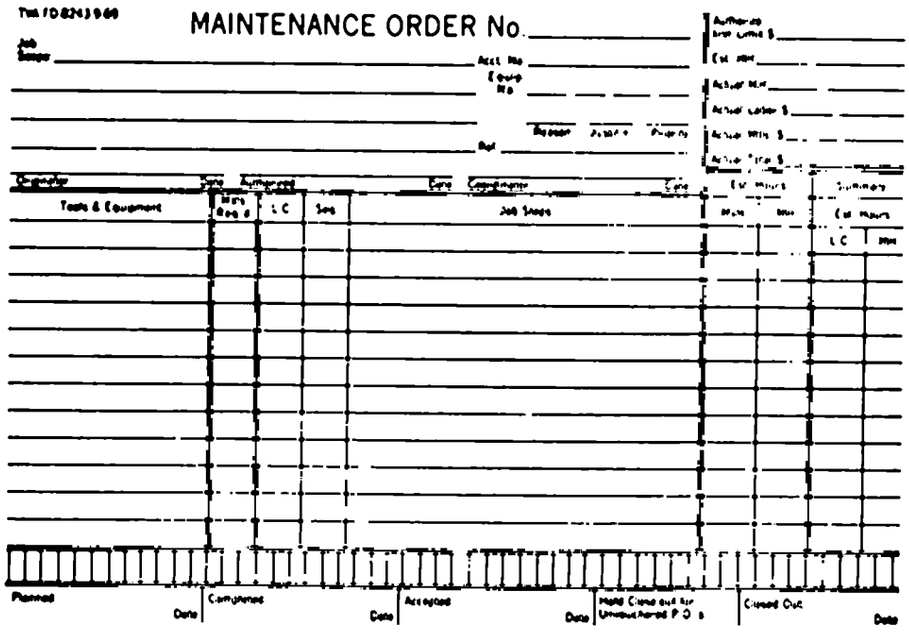

SAMPLE OF A MAINTENANCE WORK ORDER

7

Prior to starting the preventive maintenance program each item of equipment and machinery should be surveyed to determine the inspection and lubrication requirements on a daily, weekly, monthly, quarterly, semi-annual, or annual basis. The survey should also include an estimate of the frequency for complete overhauls.

8

Types of inspections

Equipment inspections may be of a general or specialized nature.

A general inspection is usually made of basic equipment using a pre-established check list.

The inspection cycle is determined by the part that is most likely to give trouble. The inspection is scheduled so that the part will be repaired to avoid shutting down the machine.

Establishing proper inspection frequencies is a matter of experience.

A small amount of production downtime may prove to be the economic level. This may be better than over maintaining with high maintenance costs.

9

Specialized inspection is used in larger plants.

Parts of the equipment which have long life are inspected less frequently. With special diagnostic equipment, the exact condition of the machinery by means of on-stream test are made and the equipment is shut down for repairs only when it is necessary.

10

Explain the inspection check sheet

One of the most important aids to a good preventive maintenance program is the inspection check sheet or report.

Outline briefly on blackboard

This sheet will list the important features of the equipment which requires inspection.

From this sheet the maintenance control section will issue the necessary maintenance requests or shop orders.

The check sheet also provides a reminder to the inspector on what to check so that nothing will be overlooked.

BELT CONVEYOR WEEKLY INSPECTION REPORT

DATE _____

CONVEYOR NUMBER _____

_____ LOAD FALLING CENTRAL ON BELT

_____ ALL ROLLS TURNING FREELY

_____ ALL ROLLS PROPERLY SEATED AND HELD IN BRACKETS

_____ ACCUMULATION OF MATERIAL UNDER ROLLS

_____ BUILDUP OF MATERIAL ON RETURN BELT ROLLS

_____ LUBRICATION LINES AND FITTINGS

_____ BEARINGS AND SEALS LUBRICATED

_____ BEARINGS RUNNING HOT

_____ CHECK SPEED REDUCER FOR PROPER OIL LEVEL. DO NOT CHECK OIL LEVEL WHEN UNIT IS RUNNING

_____ CHECK SPEED REDUCER AND SEALS FOR OIL LEAKAGE–BREATHER PLUG OPEN?

_____ CHECK SPEED REDUCER FOR OVERHEATING

_____ CHECK V-BELTS AND SHEAVES FOR PROPER SLACK AND ALIGNMENT

_____ SKIRT BOARDS PROPERLY ADJUSTED

_____ TAIL SKIRTS PROPERLY CUT AND ADJUSTED

_____ CHECK BELT SCRAPER FOR WEAR

REMARKS: _____

INSPECTOR _____

11

Scheduling preventive maintenance

Scheduling the preventive maintenance inspections and repairs can be done manually or with electronic data processing.

Preparation of the preventive maintenance schedule for any given week, as you can see, requires close coordination with production scheduling.

The selection of the preventive maintenance inspector is an important part of the program.

While the inspector will not make the repairs he notes as being required, it is helpful if he has the ability, for then he will recognize the need and what is involved in making the repair.

The number of inspectors will change from plant to plant depending on the frequency of inspections, size of the plant, and equipment coming under the plan.

In some cases, critical items will want to be verified by re-inspection.

12

Very important

Lubrication is an integral part of the preventive maintenance program. It will be covered in more detail in chapter 24.

In many plants, this important work is assumed by no one.

In some cases the major emphasis has been placed on using fewer kinds of oils and greases, rather than on determining the proper lubricants, and seeing that they are regularly applied.

Most of the major oil companies will assist in setting up a lubrication program.

13

As soon as the preventive maintenance program is in operation, steps should be undertaken to obtain maximum benefit from it.

Substantial savings can be made by concentrating maintenance and design on, say the top five to ten machines, that cost the greatest amount of money to keep in repair.

The preventive maintenance program will also show repeated failures of some equipment.

Such repeated failures should be analysed for a change in the method of repair, or replacement with new equipment.

In some cases the preventive maintenance data may show that it would be desirable to overhaul certain equipment on a regular basis.

14

Maintenance prevention

An important part of the preventive maintenance program, which some do not take advantage of, is the planned procurement of buildings, machinery, and equipment that has been designed to minimize maintenance, and have maximum operating life.

At least once each year the preventive maintenance program should be reviewed and deficiencies noted and corrected.

The necessity for continuous observation and alertness will ever be present with or without the annual review.

While preventive maintenance is not a cure-all, the timely repair of equipment and machinery will prevent many costly breakdowns.

15

Safety

Safety should never be neglected in the preventive maintenance program. This should apply to the inspection as well as repairs.

The maintenance inspection report and work order can be used to caution repairmen if some defect is known that might cause an injury during repair.

16

Questions

Why have a preventive maintenance program? (Purpose is to prevent breakdowns and to reduce cost)

Why should an equipment and machinery survey be made before starting the preventive maintenance program? (To determine the condition of the equipment and how often the inspection and lubrication should be done)

What determines the frequency of inspections? (It is determined by how long the equipment will last. Equipment having a long life does not have to be inspected as often as an item with a short life.)

WHAT TO DO	WHAT TO SAY

1

Introduction

Lubrication is the reducing of frictional resistance that occurs at the surface of two solids when they are forced to slide over each other. Lubrication is an essential feature of all modern machinery and has been throughout the ages.

The first authenticated use of lubricants is found in the relics of ancient Egypt. The science of lubrication, as we understand it today, is less than one hundred years old.

Stress this

The lubricant separates the two solids with a thin film so that their resistance to motion is much less. In a properly lubricated system, the resistance to motion comes mainly from the shearing action of the lubricant film itself, and not from the two solid surfaces rubbing against each other. This is why it is important that the correct lubricant be used for the specific condition.

List on blackboard

A good lubricant must:

1. Have a high oiliness (even as a thin film due to low speed, heavy load, or intermittent action).
2. Be chemically stable in the presence of heat and moisture.
3. Have a minimum tendency to foam.
4. Be near neutral so that oil will not attack highly polished metal surfaces.

2

How to set up a program

In establishing a lubrication program, it is necessary to survey the equipment to determine the proper lubricants and lubrication frequency. Most major oil companies will cooperate in making such a survey and will provide a lubrication manual for the plant.

After the survey, their recommendations will help in determining the number of different lubricants to be used. Usually eight or ten types will be sufficient for most plant needs.

3

After the survey is completed, the lubricant number specified by the oil company and the plant number should be shown so that there will be no mistakes.

Write on blackboard

Plant Number	Manufacturer's Number
1	Pacemaker Oil #3
2	Pacemaker Oil #5
3	Pacemaker Oil #7
4	Pacemaker Oil #8

If the plant should get a new supplier, the list would have to be changed to show his products.

4

From the recommendations of the oil company, or the manufacturer, a lubrication manual can be developed which will include all the information as to when to lubricate and what lubricant to use.

(Review the major points of the attached sheets for lubrication of a belt conveyor.)

5

The lubricating schedule can be accomplished by means of a daily, weekly, or monthly lubrication check sheet.

The most convenient way to analyze work associated with the schedule is by the number of minutes required to perform each lubrication. From these standards, a lubrication check sheet can be assembled.

(Review the attached lubrication check sheet with the class.)

ATTACHMENT-BELT CONVEYORS

SHAFT-KING SPEED REDUCTION DRIVES

Oil Leakage

Improper lubrication or loosening of housing screws may result in oil leakage. Leakage may normally be eliminated without disassembly of the unit or removal of the unit from the drive shaft. A few simple rules for correction of leakage should be followed.

For Oil Leakage Through Seals: See chart and service manual.

For Oil Leakage From Housing: Leakage at housing screw locations is usually caused by loosening of the screws due to machine vibration or reversing conditions. Periodic tightening of these screws will relieve this condition.

Operating Temperature

See chart and service manual.

Repairs

See chart and read service manual before dismounting reduction unit from shaft and starting repairs.

CAUTION: DO NOT LOOSEN SLOTTED-HEAD SCREW IN LOCKING NUT

Lubrication

All Shaft-King Units have been designed for splash lubrication of gears, pinions and anti-friction bearings. Therefore, grease or other non-fluid lubricants must not be used.

Fill to lowest overflow plug with specified oil.

	Surrounding Temperature	
Oil Company	AGMA #2 15-60° F	AGMA #3 50-125° F
Pure Oil Company	Purepale (C) Hvy. Med.	Purepale (G) Hvy.
Shell Oil Company	Vitrea Oil 38 (J)	Vitrea Oil 41 (J)
Texaco, Inc.	Regal PC (G) R&O	Regal F (F) R&O
TVA Code	LEPRG-2	LEPRG-3

Flush after first 100 operating hours. Fill with new oil. In normal service change oil every 2500 hours or at least semi-annually. In severe service change oil every 1 or 3 months.

Bearings

Lubricate plain bearings weekly and anti-friction bearings every three months. Use TVA GP-1 Grease.

FALK SPEED REDUCER

After First Month's Service

Drain all oil and thoroughly flush out unit. Add fresh oil.

Periodically

Check oil level when gears are at rest. Add oil if needed. Do not fill above mark indicated on the dip stick for leakage or undue heating may occur.

Every Six Months–Service as Follows:

Reducer–Change oil every six months or every 2400 hours of operation, whichever occurs first. It is not necessary to dismantle the reducer; just drain, flush and refill.

	Ambient Temperature	
Oil Company	15-60° F	50-125° F
Shell Oil Company	Tellus Oil 41	Tellus Oil 72
Pure Oil Company	Purepale Heavy	Purepale Special Heavy
Texaco, Inc.	Regal Oil PE (R&O)	Regal Oil G (R&0)
TVA Code No.	LEPRG-3	LEPRG-4

Couplings–Lubricate Falk Steelflex coupling when servicing the reducer, or at least once a year as explained in the coupling manual.

Use one of the following greases:

Pure Oil Company	Paco Fibre Grease No. 2
Shell Oil Company	Alvania Grease No. 2
Texaco, Inc.	Marfax Heavy Duty No. 2
TVA Code	GP-1

Seals–Periodically or at least every six months or 2500 hours of operation, purge contaminated grease from seals by pumping fresh grease through the seal until it flows out of the bottom pipe plug hole. (Remove plug before purging.)

Use one of the following greases:

Pure Oil Company	Paco Fibre Grease No. 2
Shell Oil Company	Alvania Grease No. 2
Texaco, Inc.	Marfax Heavy Duty No. 2
TVA Code	GP-1

Roller Chain–Keep oil up to mark with TVA Code MO-4. Change oil every six months.

ATTACHMENT-LUBRICATION CHECK SHEET

Equip. No.	Equip. Name	Std. Min.	Mon.	Tue.	Wed.	Thur.	Fri.	Sat.
1006	Belt Conveyor	20.00						
1030	Flake Screen	12.00						
1032	Speed Reducer	4.50						
	Direct	36.50						
	Indirect (20%)	7.30						
	Total in Minutes	43.80						

After estimates have been made and the oilers have become familiar with their work, the route should be checked for adjustment before final assignments are made.

In this manner, you can be sure that each oiler has a fair work load.

6

Some plants make the mistake of assigning their less competent employees to the job of oiling. The oiler should be an intelligent and capable employee. The machinery entrusted to their care is too valuable to do otherwise.

Some plants assigned this work to skilled craftsmen so as to assure themselves of superior work. Regardless of who is assigned the work, it is a good procedure to verify the accuracy of the lubrication check sheet by occasionally spot checking an item or two.

Good lubricating practice does not stop. When equipment breaks down or is pulled for repairs, the equipment should be checked over. Excess wear can be evident if it has not been lubricated often enough with the proper lubricant.

7

Lubricant dispensing

The person responsible for lubrication should be supplied with a lubrication cart or buggy of suitable size. The cart should carry an adequate supply of the required lubricants and the proper lubrication appliances.

Sketch on blackboard

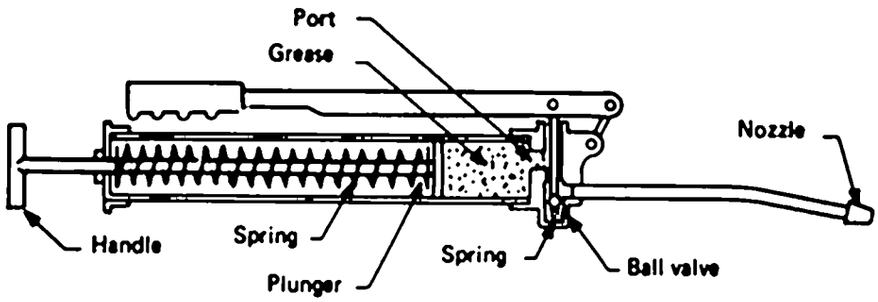

GREASE GUN
(Lever-type)

OIL
SQUIRT CAN

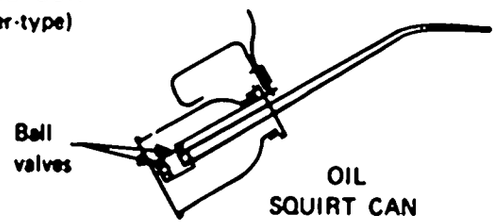

OIL
SQUIRT CAN
(Pump-type)

The oiler should also have available the lubrication charts and check sheets for the machines that he intended to cover during that work period.

8

Why automatic lubrication?

The proper lubrication of complicated and expensive equipment has become more and more of a problem.

This is particularly true in some fertilizer plants on such application as ball mills, crushers, and kilns where total enclosure of the gearing is impractical. Also there is always the danger that foreign substances may contaminate the lubricant and cause excessive wear.

Some machines such as moving grates and conveyors have a large number of bearings. Since they operate under very dusty conditions, it is desirable to lubricate the bearings often with a small amount of grease.

This has brought about automatic lubrication. A small line is run to each bearing from a central reservoir. With the aid of a pump and a timing device, a small amount of lubricant is supplied to the bearing at regular intervals.

In some cases, such as kiln, a liquid lubricant is sprayed on the gearing.

9

A good lubricating program starts with storage. Care must be exercised in the manner in which lubricants are stored, handled, and dispensed.

Stress this

Unless properly controlled, experience has shown that the lubricant storage area can become the eyesore of the plant.

List on blackboard

1. Always store drums inside a building.
2. Keep covers on drums and pails when not in use.
3. Keep bungs closed tight. The best lubricant can be made ineffective by contamination.
4. Oil storage space should be weather-tight and of fireproof construction.
5. Proper racks for storage of lubricant containers should be provided together with means for handling and placing containers on the racks.
6. Lubricant containers should be kept clean on the outside and lubricant pumps, measures, and lubrication appliances should be stored away from open doors and windows.

Question

Why? (So that these items won't be contaminated by trash blown in from the outside.)

10

Operating duties

The oiler should check with operations so that he will know what equipment will be down and when.

Before starting on his rounds, he should review the latest inspection sheets on the equipment he intends to lubricate to see if there are any special items that need his attention.

He should also make sure that he has a supply of lubricants on the cart that he will need that day.

As he makes his rounds he should keep his check sheet posted. If he finds anything that requires attention he should report it to the operating foreman.

The oiler must realize the importance of keeping the lubricants free of contamination. Also clean the fittings with a cloth and make sure the grease gun nozzle is clean before grease is applied.

On an automatic lubrication system, be careful when replacing the lubricant container with a full one to see that no dirt or trash gets into the lubricant.

11

Preventive maintenance

Lubrication is an integral part of any preventive maintenance program. Time and time again substantial results have been noted in less downtime and decreased maintenance cost when an effective lubrication program was started.

Some points to keep in mind in a good preventive maintenance program are:

List on blackboard

1. When shutting down a machine for a long delay, bearings should be lubricated in order to seal the bearing and keep out dirt and other contaminants.
2. Do not use kerosene to clean bearings as it will not evaporate. When the lubricant is applied, it will be diluted by the kersene. Use mineral spirits for this purpose.
3. Do not start or run a piece of equipment until you are sure all operating parts are lubricated with the proper grade of lubricant.
4. Always use lubricants specified and establish a regular system of lubrication of all plant equipment.
5. Make it a practice to maintain oil cups, grease guns and fittings and all other lubrication appliances in a clean condition.
6. Never permit oil hole covers, bearing caps and other lubrication devices to remain open.
7. Before checking a piece of machinery to see if it needs oil by lifting an oil cap or pulling up on the oil dip stick, wipe away any dirt present so that it won't get into the oil.
8. After applying the lubricant, wipe off any excess so that dirt will not accumulate at that point.

12

The manufacturer of the equipment will recommend as to how often the equipment should be lubricated and what lubricant to use.

Keep in mind that you might want to lubricate more often than he recommends if the conditions are very severe.

For example, the manufacturers recommend this frequency for the following equipment:

Review with class

1. Motors. Lubricate every six months or 4000 hours of operation.
2. Speed Reducer. Drain oil after first month of operation, flush, and refill with new oil. Change oil thereafter every 2400 hours of operation.
3. Check couplings (Falk) once each year and lubricate if necessary.

4. Bearings. Lubricate plain bearings weekly and anti-friction bearings every three months. Every six months, flush grease lubricated anti-friction bearings with mineral spirits, dry, and repack (1/3 capacity).

5. Seals. Periodically or at least every six months or 2500 hours of operation, remove bottom plug and purge contaminated grease from seals by pumping in fresh grease. (Until it flows out of the hole.)

13

Safety

The oiler must not try to oil or service a piece of equipment while it is in operation. The danger of being caught in the equipment is too great.

Before lubricating any equipment in which there is danger of his being injured, he should see to it that the electircal switch that supplies power is pulled and locked. He should also place a hold tag on the switch stating that the equipment is being serviced.

When he is finished, he should, by all means, remove his hold tag so that the equipment can be placed back in operation.

The importance of the oiler keeping the oil storage area clean cannot be emphasized enough from the safety point of view. This is to prevent fires and injuries from falls. When changing lubricant containers in an automatic lubricating system, use caution in removing the reservoir cover plate and follower plate. They are under 200 pounds spring tension.

14

Questions

Quite often in lubricating literature we see the abbreviations SAE and AGMA. What do they mean? (SAE is the Society of Automobile Engineers. AGMA is the American Gear Manufacturers Association.)

What is the viscosity of an oil? (The internal fluid resistance of a substance which makes it resist a tendency to flow)

Why should the oiler do a good job? (Because of the expensive machinery entrusted to his care)

What is the danger of servicing equipment while it is operating? (It is a dangerous practice for the one doing the servicing, besides the possibility of damage to the equipment.)

Why would plant management want to assign a less competent employee to the job of oiling? (Job is not as strenuous physically as some of the others, and possibly the management does not fully realize the responsibility placed upon the oiler.)

15

Slides

The first slide shows how the grease fittings have been brought to a central point to make the job of lubricating easier and quicker.

The second slide shows an automatic centralized lubricating system.

The third slide shows a storeroom for lubricants.

WHAT TO DO	WHAT TO SAY
	1
Introduction	The objective of any safety program is to stimulate a basic philosophy in safety thinking and through the application of this program develop and promote safe work practices, reduce unsafe acts of persons, control inherent hazards, and provide a working environment reasonably free from unsafe physical conditions.
Safety program objective	
	2
Policy	Safety policy is based on a conviction that the well-being of employees must be one of the major considerations in all operations. People are our most important asset; their safety is one of our greatest responsibilities. The goals of a safety program are both humanitarian and economic. Since industrial accidents which result in injury or death and loss of property are preventable, it is our duty to send each employee home to his family each day whole and healthy.
	Good safety performance is clear evidence of good management. Thus, safety must be an integral part of every managerial and supervisory position.
	It is the policy to incorporate accident prevention principles and techniques as an integral phase of all operations. Management is sincerely interested in preventing accidents and each employee is expected to report to his foreman unsafe conditions which he encounters in his work. The foreman will give job instructions and no employee is expected to undertake a job until he has learned how to do it and is authorized to do it by his foreman.
	No employee should undertake a job that appears to him to be unsafe without first discussing the job with his foreman. If any employee suffers an injury, even a slight one, he is required to report it at once to his foreman or proper plant medical authorities.

3

The supervisor will provide all personnel under his jurisdiction an opportunity to periodically hear and discuss safety aspects of their jobs because he is responsible for the protection of personnel and equipment in his area. Any, or a combination of the following methods may be used.

Methods for creating safety consciousness

1. Periodic discussions of safety items in meetings normally scheduled for review of production and administration.
2. Regularly scheduled safety meetings.
3. Small group meetings with assigned personnel.
4. Discussion between supervisors and individual members of a group.

4

Specific requirements Important

It is impractical to attempt a complete discussion of safety rules for all activities within a plant but one of the more general rules is:

The wearing of hard hats and spectable type safety glasses should be a job requirement and condition of employment in all shops and operational areas of the plant.

5

Personal protective equipment

1. Protective equipment such as hard hats, gas masks, chemical goggles, safety glasses and rubber clothing should be provided at no cost to the employee.

2. Employees are expected to use protective equipment appropriate to the hazards encountered.

3. Personal protective equipment must be inspected and cleaned by the user.

4. Other safety equipment that should be available to employees in many plants:

(a) Air supplied masks
(b) Air supplied suits
(c) Chemox masks (self-contained breathing apparatus)
(d) Chemical respirators
(e) Chemical hoods
(f) Dust respirators
(g) Ear protectors (ear muffs and plugs)
(h) Face shields
(i) Safety hats and caps
(j) Safety belts
(k) Safety goggles (including chemical goggles, welding goggles, and chippers' goggles)
(l) Protective clothing (neoprene rubber, and aluminized asbestos as well as welders' leathers)

(m) Gloves (leather, hot mill, and rubber)
(n) Sandblasters' hoods

6

Other emergency equipment

Adequate safety showers and air mask stations should be in the operating areas.

1. Safety showers and air mask stations should be inspected regularly and maintained in condition for immediate use in case of emergency. (Inspections usually done by the foreman)

2. Air mask stations should be provided with activated charcoal filters which are to be inspected regularly. The air lines should be blown down at regular intervals to reduce the oil and water present.

Fire Extinguisher Stations

1. The fire extinguisher locations should be identifiable by a red background of reflectorized paint.

2. Fire extinguishers should be checked and serviced regularly.

3. If an extinguisher has been used, do not hang it back in the bracket at the station. Leave it on the floor near the station to signify that it needs to be serviced.

7

Fire and ambulance service

(If this service is not provided OMIT)

Fire and ambulance service should be provided. In case of emergency call ( ) and give the following information:

1. Type of emergency (fire or injury)
2. Number of persons hurt
3. Type of injury and cause if known
4. Fire or ambulance station number where equipment is needed, and any other directions helpful to the driver.
5. If possible, assign someone to intercept the emergency vehicle and give directions to the driver.
6. The family of an accident victim should be promptly notified by a designated person in a position to know the facts of the case.

Stress this

8

(Fill in the blank with emergency telephone number to call)

1. All buildings should have fire and ambulance station numbers posted in a prominent place, usually at the corners of the building. You should memorize this number at your individual work locations.

2. All telephones in the plant should be equipped with a "stick on" sign listing the Fire and Ambulance number ( ) as well as the station number where the emergency equipment is needed. This information is there to assist you in properly reporting an emergency.

9

Injury from Inhalation

First-aid technique

1. Remove victim to fresh air; keep him warm and quiet.
2. If breathing has stopped, apply mouth-to-mouth resuscitation or artificial respiration immediately.

10

Chemical Spills on Skin

First-aid technique

1. Flood with water, using safety showers or hose.
2. Remove contaminated clothing while flooding is being done.

11

Chemical Contamination in Eyes

First-aid technique

Flush eyes with water. Use gentle flow of water from hose, safety shower, or use hard hat as a pan.

12

Electric Shock

First-aid technique

1. Break contact with electrical conductor; turn off switch if possible but do not waste time hunting the switch. Stand on a folded dry coat, newspapers, or a dry board, and with one hand protected with several thicknesses of dry cloth, newspaper, a dry stick or pole, grasp a dry part of the victim's clothing and drag him away from the conductor. It might be possible to push a live wire off the victim with a dry wooden stick or to pull the victim off a live wire with a piece of dry rope or a handkerchief looped over the foot or hand.

(Demonstrate various methods of artificial respiration and closed chest heart massage)

2. If the victim is not breathing start mouth-to-mouth resuscitation or artificial respiration immediately. Check for pulse because in many cases of electric shock, ventricular fibrillation has occurred and if this is the case, close chest heart massage is necessary to maintain blood supply to the brain. This should be continued until breathing is restored, rigor mortis sets in, or a physician indicates no further need.

13

Physical Shock

1. Shock follows any injury. Control bleeding by digital pressure if present. Keep victim warm but not hot. Remove all foreign bodies from his mouth.
2. Use ammonia inhalant if available but do not give a stimulant.

3. Loosen tight clothing.

4. Place in a lying down position with feet higher than the head, except in cases of chest injury.

5. Relieve pain as much as possible and reassure and encourage the victim.

First-aid technique

6. Give artificial respiration if needed. *Remember artificial respiration should be started any time the patient is not breathing.* Bleeding should be controlled. Treatment for control or prevention of shock should be started. Major injuries should be reported immediately as previously covered and employees with minor injuries should be referred to qualified personnel for treatment.

14

Special Notes

First-aid technique

Do not move a seriously injured patient unless there is immediate danger of further harm. Too often serious damage is done by unnecessary handling. Generally, it is much better to make the patient as comfortable as possible and wait for the ambulance.

15

First-aid technique

Fellow employees should not alarm the family with incomplete and often erroneous information. In most cases the victim should be allowed to talk to his family on the telephone.

16

Entering tanks or vessels

The procedure for entering any tank or vessel is as follows:

1. The vessel will be thoroughly washed and purged.

2. All lines to and from the vessel will be valved and blanked off at flanged connections nearest the vessel.

3. The interior of the tank or vessel will be tested for
   (a) Explosive vapors
   (b) Toxic concentration
   (c) Oxygen deficiency

4. It is the foreman's responsibility to see that any person entering a tank or vessel is fully acquainted with his duties and is properly outfitted with the necessary protective equipment.

5. Another person equipped with the proper protective clothing should stand by the manhole tending the air hose and safety lines. In the event of an emergency, he will be in position to render immediate assistance.

6. At least one other person must be in the immediate area to back up the operation and if for any reason the "look out" or backup man has to leave the area he must get the man out of the vessel.

7. This procedure provides the maximum safety coverage. Entry into some vessels will not require as much coverage. Deviation from the maximum coverage will be left up to the discretion of the foreman involved and it will be his responsibility. In no case should any employee enter a vessel without the approval of the foreman. The Safety Engineer should be consulted if there is any doubt concerning the procedure to be followed.

17

Opening lines and equipment

Preparation for opening lines and equipment must necessarily be tailored to the hazards involved. Generally, effort should be directed toward isolation and decontamination. Appropriate protective equipment must be worn, and emergency equipment or supplies, water hose, slag, wet burlap, etc. must be made available prior to commencing the work.

18

Hold tags

When an employee is required to do work of any description on any electrical equipment or mechanical equipment, he shall for his complete protection see that the main switch controlling the line or energizing the equipment is open. Pushbottons are not adequate for this purpose.

When an employee is required to work on pipelines, he shall when necessary for his complete protection see that the proper valves are closed and that a hold tag is placed on these valves. The hold tag should be dated and signed by the employee placing the tag. A reason for use of the hold tag should be also written on the tag.

19

Show to class various hold tags

Each craft engaged on the above work should place and leave its own hold tag on the apparatus until completion of its part of the job. A coding for hold tags can be as follows:

Substitute the coding used in your plant

Red Hold Tags	–	Electricians
Green Hold Tags	–	Maintenance workers other than electricians
White Hold Tags	–	All other employees

As a further safeguard, any employee may request that an electrician remove fuses from a circuit or disconnect leads (in the case of a thermal breaker) so as to positively render equipment inoperative. In this case the electrician and each of the other crafts involved in the work must place their own hold tags. The green and white hold tags must be removed before the red hold tag.

Shift men leaving equipment tagged out at the end of their shift should, in all cases, notify their relief, who will then have the authority to remove the tag when work is completed. All facts should be entered in a log book.

Hold tags

Employees responsible for work under control of a hold tag should see that tags are removed when work is completed. Hold tags may be removed only by the person signing the tag, or with his consent, except that the foreman in charge of the employee performing the work under protection of a hold tag and in case of a white hold tag, the operations supervisor, after thoroughly checking, may authorize removal of the hold tag. Any employee who fails to place a proper hold tag or fails to honor a valid hold tag is subject to severe disciplinary action.

The primary reason for hold tag regulations is to prevent injury to persons. The regulation is written in general terms so that it can be applied to almost all situations, knowing that no regulation of reasonable length and acceptable complexity can be written to cover each specific situation which might arise over the years. This is a good time to take a good look at the regulation and the way we carry it out. Here are our responsibilities on hold tags.

1. We must use them for the protection of ourselves, our fellow workers, and equipment.

2. We must date, sign, and indicate why the hold tag is used. If it is permissible for someone else to remove the tag, this should be indicated. If no such provision is made then the man who signed the tag, or appropriate foreman, must be contacted before the tag is removed.

Hold tags

3. Each craft or operator working on the job must use their own hold tag. *DO NOT* depend on the hold tag of another craft or operator. Place the tag where you will be certain to get the required protection.

4. Hold tags should be removed when they are no longer needed to protect people or prevent damage to equipment. We should not delay the use of equipment because of premature placing or failure to promptly remove hold tags. Tags other than hold tags should be used to convey information regarding the condition of equipment.

5. While not required by the hold tag regulation, it is always a good idea to check your hold tag after any break in your work or even once in a while during the day. Even though hold tags may be honored to the letter, it is conceivable that due to acid spills, moving equipment, or other unforeseen circumstances, the hold tag might be destroyed. So, go that extra step and check your hold tag periodically.

20

Standard color codes

1. The color code is intended as a supplement to an exact identification system with written titles. It is based in general on hazards or classes rather than on separate colors for specific materials. The color warning is usually in the form of a band or bands, completely encircling the pipe at strategic points, although the entire line may be colored.

Substitute the coding used in your plant

2. A piping system possessing two major hazards will have a band for each hazard.

3.

Color	Hazard or Class
Yellow	Flammable materials
Orange	Materials hazardous for reasons other than flammability.
Green	Air and other nonflammable materials under pressure.
Blue	Water
Red	Fire protection materials.
Brown	Vacuum

21

Compressed gas cylinders

1. All cylinders should be chained or tied securely to columns or buildings walls in an upright position.

2. When cylinder is not in use it should be capped.

3. All empty cylinders should be capped, marked empty or MT and returned to the warehouse.

4. At pressures above 15 pounds per square inch gauge, acetylene is unstable and will explode at the slightest shock unless it is dissolved in acetone in an approved cylinder. *For this reason acetylene cylinders must be stored and used in a vertical position to avoid loss of acetone.* Under no circumstance should acetylene be used at a pressure above 15 pounds per square inch gauge.

5. Acetylene cylinders have two rupture plugs at the top. These plugs will rupture at a temperature of 210° F. It is most important that hot slag or metal not fall on these cylinders. Therefore these cylinders should not be located directly below welding or burning operations.

6. Oxyacetylene equipment should be kept clean, free of oil and in good condition a. all times.

7. Hazards associated with the handling and use of oxygen stem from its ability to support combustion. Most materials that burn in air will burn much more vigorously in oxygen. Some combustible substances, such as oil, will burn with explosive violence in oxygen. For this reason it is essential that sources of oil contamination be avoided where oxygen equipment is concerned.

22

Mechanized equipment (cranes, hoists, draglines, power shovels, forklifts, and payloaders)

1. Manufacturer's load rating plates are attached to all load hoisting equipment in full view of the operator and load limits must not be exceeded.

2. Periodic inspections should be made to assure safe operating condition and proper maintenance.

3. Equipment must not be operated in close proximity to high voltage (440 volts or over) lines until the general electrical foreman has been notified.

(a) Work must not be conducted unless power has been shut off or determination has been made that the boom cannot reach within 15 feet of the high voltage line.

4. Payloaders and forklift trucks should be equipped with adequate overhead guards.

23

Portable hand lamps and hand tools

We all have respect for high-voltage electricity, but most people are inclined to treat 110-volt power rather casually, even with contempt. This attitude is easy to understand because we all have handled 110-volt electricity. Extention cords, lights, power tools, and most household appliances are 110-volt current. Considering the amount of 110-volt power used in the world it is amazing that more people are not hurt. Under some conditions the amount of electricity that passes through the body when it comes in contact with 110-volts does little damage, but these conditions can change rapidly.

Three factors which determine the severity of low-voltage electrical shock are: magnitude of current, path of current, and the duration of current flow. The conditions which affect these factors change rapidly. One time you may get a "tingle," the next time you could be knocked down, but with the right conditions you could be killed. Your hands may be sweaty or you may be standing on damp ground or floor; if so you may be one of the fatalities.

There are several precautions that may be followed to prevent electrical shock. They may seem unimportant, but to ignore them is to ask for trouble:

1. Before you plug in an extension cord, drop light, or any piece of electrical equipment, look it over closely. Make sure that the wires are not frayed.

2. Grounded circuits are provided in the plant. Electrical equipment should never be used on an ungrounded circuit. Normally, the grounded circuits are not available at home, but the time spent in grounding electric drills, and standing on a rubber mat for protection is well worthwhile.

3. Twelve-volt extension lights are provided in the plant and should always be used. Remember, by use of grounded circuits and by use of 12-volt extension lights, we have not eliminated all the hazards of low-voltage electricity, but we have reduced the hazards considerably.

24

Safeguarding equipment

Basically, if an employee's job is to operate a piece of mechanical equipment, he should be instructed in all the safety precautions connected with the safe operation of the machine before being permitted to run it. This applies as well to experienced operators, at least until the supervisor is certain that the operators know the hazards involved.

If an employee does not operate a machine but does work around mechanical equipment, the same applies. Procedures should be established positively so that there is no misunderstanding, and supervision should be such that no deviation from the following safe work practices is tolerated.

25

1. No guard should be adjusted or removed for any reason by anyone, unless (1) specific permission is given by the supervisor, (2) the person concerned is specifically trained, and (3) machine adjustment is considered a normal part of his job.

Safeguarding equipment

2. No machine should be started unless the guards are in place and in good condition. Defective or missing guards should be reported to the foreman immediately.

3. Whenever safeguards or devices are removed to make repairs or adjustments or to service equipment (lubrication and maintenance), the power for the equipment should be turned off and the main switch "hold tagged."

4. V-belt, round belt, or rope drivers running on grooved pulleys should be enclosed. Pulleys should be enclosed at least to the inrunning nip point.

26

Conclusion

Safety on every job is essential and is the responsibility of every employee. Accidents may occur, but it is possible to prevent them. Most are caused by unsafe actions. Freedom from the pain, suffering and cost of injuries and property damage is worth striving for—on the job and off—because everyone loses when you are hurt in an accident—you, your family, and your employer.

There is plenty of time to perform every job the safe and secure way, which is the best way. Your supervisor, fellow workmen, and Management expect you to use safe work methods. There is a safe way to do any job. Your supervisor will explain how. Ask him whenever you have any questions about how a job is to be done.

Conclusion

Remember, generally speaking, *YOU* are the last person who can prevent accidental injury to you. So, let's work together and report unsafe conditions or actions to your supervisor at once. Look out for the other fellow and help the new man. Safety is everybody's job.

27

Questions

Why should injuries seeming to be slight be reported and treated? (Many minor injuries not treated result in more serious ones if left untreated and could result in lost time from the job.)

Who is responsible for the protection of personnel and equipment in the plant? (Safety Engineer or *Supervisor*)

Who pays for protective equipment such as hard hats, respirators, chemical goggles, etc.? (*Company*, Employee)

Who is responsible for cleaning and inspecting protective equipment? (The user)

What information should be given when reporting an emergency by telephone?

What is the emergency telephone number at this plant?

What should be done first if the victim is not breathing? (Apply mouth-to-mouth resuscitation or artificial respiration immediately.)

Are spectacle-type safety glasses adequate for wear when handling acids? (No, chemical splash goggles)

What is ventricular fibrillation? (It is a condition usually occuring after electrical shock where the heart is pulsating but not pumping blood. Artificial respiration is useless if this condition is present in the victim and closed chest heart massage is a necessity if life is to be sustained.)

Whose responsibility is it to insure a person's safety when entering a tank or vessel? (Foreman)

For work involving entry into equipment such as granulators the main switch or pushbutton should be tagged out. (Main swtich)

If five crafts are engaged in work requiring "hold tags," how many tags should be used? (Five, one by each craft)

Which color "hold tag" has the highest rank–green, red, or white? (Neither, all have the same rank.)

Additional protection can be provided when doing work involving entry into equipment such as granulators by requesting what? (That the electricians remove fuses or disconnect leads)

What is the color for phosphorus in the color code? (Yellow) Carbon monoxide? (Orange) Water? (Blue)

When not in use acetylene tanks should be stored upright or lying down? (Upright)

Since pure oxygen is nonflammable, is it safe around oils and greases? (No, oxygen supports combustion and in the presence of oils and greases it burns with explosive violence.)

Generally speaking, who is the last person who can prevent accidental injury to you? (*You*)