AGENCY FOR INTERNATIONAL DEVELOPMENT
WASHINGTON, D. C. 20523

BIBLIOGRAPHIC INPUT SHEET

FOR AID USE ONLY

1. SUBJECT CLASSIFICATION

A. PRIMARY: Agriculture — AF25-0000-0000

B. SECONDARY: Soil fertility,fertilizers,and plant nutrition

2. TITLE AND SUBTITLE

New technology in the production of nitrogen fertilizers

3. AUTHOR(S)

Gray,R.C.; Livingston,O.W.

4. DOCUMENT DATE	5. NUMBER OF PAGES	6. ARC NUMBER
1971	20p.	ARC

7. REFERENCE ORGANIZATION NAME AND ADDRESS

TVA

8. SUPPLEMENTARY NOTES *(Sponsoring Organization, Publishers, Availability)*

(Presented at 2d Soils Colloquium,Soc.Colombiano de la Ciencia del Suelo,Palmira)

9. ABSTRACT

10. CONTROL NUMBER	11. PRICE OF DOCUMENT
PN-RAA-183	

12. DESCRIPTORS

Nitrogen
Product development

13. PROJECT NUMBER

14. CONTRACT NUMBER

PASA TA (QA) 6-69 GTS

15. TYPE OF DOCUMENT

AID 590-1 (6-74)

8

NEW TECHNOLOGY IN THE PRODUCTION OF NITROGEN FERTILIZERS[1]

By

R. C. Gray and O. W. Livingston

I am pleased and honored to be here with you today to discuss "New Technology in the Production of Nitrogen Fertilizers." Many of the nitrogen fertilizer materials most popular today are made possible by technological improvements of recent years. Pressures of increasing transportation and handling costs, better understanding of agronomic needs, and new methods of application in the field have created a need for materials that fit the modern world. Through development of new technology, an attempt is being made to supply these materials.

How changes occur in use of specific nitrogen materials can be illustrated by comparing three commonly used materials--ammonium sulfate, ammonium nitrate, and urea--on the basis of their shares of world nitrogen production (Figure 1). Ammonium nitrate is remaining rather constant in quantity, and urea is replacing ammonium sulfate. Part of this is probably due to the higher analysis of urea--45% or 46% N compared to 21% N for ammonium sulfate--and resulting savings in transportation and handling costs. Part is due to gradual lowering of the cost of urea through new production techniques.

---

[1]Presented by R. C. Gray to the II Soils Colloquium, Sociedad Colombiana de la Ciencia del Suelo, Palmira, Colombia, September 2, 1971.

Anhydrous ammonia is the base material for most of the nitrogen fertilizer used in the world. Modern plants have large capacity, with many producing 1,100 to 1,400 metric tons per day. Today's centrifugal compressors, much more efficient than the reciprocal compressors used in older plants, require a plant of at least 500 metric tons per day capacity for economic production. Transportation economics make it desirable that ammonia plants be located near the raw material supply, usually natural gas. As a result, we find the new, large ammonia plants near major oil fields, such as the Gulf Coast of the United States, the Caribbean, Libya in North Africa, and Kuwait on the Arabian peninsula.

Anhydrous ammonia is generally stored and transported in the liquid state. Since it is a gas at normal temperatures and atmospheric pressure, it must either be kept in a pressure vessel capable of withstanding pressures of over 14 kg/cm^2 or it must be cooled to minus 33° C., for storage at atmospheric pressure.

Very often ammonia is converted at the production site to other forms of nitrogen fertilizers that can be transported to the point of use by conventional handling methods. However, ammonia may be carried in railroad tank cars, by barge, by refrigerated ocean tanker, or by tanks placed on an inter-island ship. Recently, a network of pipelines was built in the United States to transport anhydrous ammonia.

Now let us consider some of the solid nitrogen fertilizers. Ammonium sulfate is the oldest of these materials. It is still an important nitrogen fertilizer because it has excellent physical condition and is a good source of sulfur. Its disadvantages are that it is crystalline rather than granular and is a low-analysis material. It can be made by the reaction of ammonia with sulfuric acid or of gypsum with ammonium carbonate. An increasingly

important source is in caprolactam production. Four tons of ammonium sulfate are produced as a byproduct for each ton of caprolactam. Ammonium sulfate may also become an end product of sulfur oxide recovery from stack gases of power plants. This might create unwieldy surpluses of the material and pose a disposal problem.

Ammonium nitrate is another well established solid nitrogen fertilizer. It is produced by the reaction of ammonia with nitric acid and is usually prilled or granulated. Because half of the nitrogen is in ammonium form and half in nitrate form, it is preferred in uses where it is desirable to have part of the nitrogen as nitrate. Of course, for use on rice, this would be undesirable. Ammonium nitrate has high hygroscopicity and in combination with organic matter, is explosive. Freight rates are high, and many places prohibit the transport or storage of solid ammonium nitrate. The explosiveness may be nullified by granulating with limestone, but this dilutes the ammonium nitrate and lowers the analysis.

As indicated earlier, urea has been gaining in popularity. In addition to its high analysis and relatively low cost, it is free from danger of fire or explosion, and is well adapted agronomically for rice. Urea has some undesirable features, however, that call for additional research and development. The prills of air-prilled urea are smaller than desired for mixing in bulk blends. The granules, or prills, are soft and urea is quite hygroscopic, making it difficult to handle in bulk.

One method of improving the physical condition of urea is to incorporate other materials. TVA and others are experimenting with production of a mixture of urea and ammonium sulfate. The material has a higher nitrogen content than ammonium sulfate, has better physical properties than

urea alone, and contains some sulfur. The mixture forms granules or prills that are harder and much less fragile than those of straight urea.

Two methods have been used at TVA to produce urea-ammonium sulfate. One method is based on the use of oil as a cooling medium instead of air as in a conventional prilling process. Solid ammonium sulfate and concentrated urea solution are proportioned and fed to a prilling cup rotating over a vessel containing cooled oil. Droplets of urea-ammonium sulfate solidify as spherical particles in the oil. A screen and centrifuge are used to remove the oil for reuse.

Another method used for production of urea-ammonium sulfate is the pan granulator. The pan is tilted at an angle and is mounted for rotation to form a moving bed of material. Urea and ammonium sulfate, as a melt, are sprayed onto the moving bed. As the pan passes under the spray, a layer of material is deposited. In this way, it is possible to produce larger granules with an almost spherical shape. The product is cooled, screened, and sized.

The analyses of two grades of urea-ammonium sulfate made by the oil prilling process are shown in Figure 2. The range of product is 30-0-0-14S to 40-0-0-4S. We think that the 40-0-0-4S will be the most popular grade. However, it should be pointed out that the product could never be completely de-oiled. You will notice that about 1% to 2.5% oil was left in the prills. This, of course, costs money and the particles appear oily when freshly made.

There is no oil in the pan granulated product. Chemical and screen analysis of 40-0-0-4S shown in Figure 3 contains 20% ammonium sulfate by weight. One problem that can be encountered in pan granulation of

urea - ammonium sulfate is the high viscosity of some of the mixed melts and the difficulty of spraying them. Some of the ammonium sulfate may need to be added to the recycle. I think you'll be hearing more about urea - ammonium sulfate in the future. The product is considered to be an excellent source of nitrogen and also contains some sulfur.

Another method for improving the physical condition of urea is to granulate it with other materials to produce complex fertilizers. It may be granulated with single superphosphate (0-16-0 to 0-20-0) and other materials--ammonium sulfate, mono- and diammonium phosphate, and potassium chloride. No ammonia is used directly and the mixture must be heated in the granulator. A burner supplies heat and moisture is provided as steam. The product is dried, screened, and cooled. Granular materials such as 14-14-14, 20-10-10, 10-20-10, 9-27-0, or 18-18-9 can be produced. Since no ammoniation is used, the water solubility of the phosphate in the product is high. Tests have been made at TVA in a small pilot plant. Agronomic response data with this material are quite limited.

A great deal of effort has been expended in the search for a nitrogen product which has "slow release" or "controlled release" properties. TVA has reached the pilot plant stage in the development of a nitrogen fertilizer of this kind, and I would like to describe the product in some detail. It is called sulfur coated urea.

In the process, urea prills or granules are fed to a rotating drum and molten sulfur is sprayed onto the moving bed of particles to form a continuous coating. However, sulfur alone is not sufficient to prevent dissolution of the particle. It is necessary to add a sealant over the sulfur to seal the cracks and pores in the sulfur coating. A petroleum wax is used for the sealant. This is also applied in the molten form.

Micro-organisms in the soil destroy the wax sealant so a microbicide such as coal tar is added to the coating. A small amount is effective. A final material, such as diatomaceous earth, is added to overcome the stickiness of the wax coating. What we have then is a multilayered coating consisting of sulfur, wax and microbicide, and conditioner in that order. Total weight of the coating ranges from 15% to 26% of the total sample weight. The product can be screened and bagged or handled in bulk.

Capacity of the early pilot plant was about 100 kg/hr. A larger unit (about 450 kg/hr) was recently put into production.

Standard tests have been developed in the laboratory to determine the proportion of urea dissolved at different time intervals (Figure 4). Briefly, the sample is exposed to water at 38° C. (100° F.) for periods of about 7, 14, and 28 days. The solution phase is sampled and the amount dissolved is determined. A plot showing the dissolution rate versus time for two levels of coatings is shown in Figure 4. With either coating, dissolution began at a high rate and decreased with time. This indicates that some of the particles were poorly coated and were dissolved rapidly. Well-coated materials release nitrogen over a long period.

As might be expected, the temperature of the water affects the rate at which the sample dissolves (Figure 5). In 14 days, the rate is doubled as the temperature is raised from 0° C. to 38° C. (100° F.) standard. By correlation of these laboratory tests with actual field results, it is hoped that the agrononic effectiveness of the materials can be predicted from laboratory tests. As so many variables affect plant response, much work remains to be done in this area.

Sulfur-coated urea is being tested agronomically in the United States and several foreign countries. Promising results have been obtained with rice fertilization where water control is poor -upland cropping areas. In Hyderabad, India, sulfur-coated urea outperformed uncoated urea with four methods of incorporation. It is again emphasized that the water control was poor or intermittent. Sulfur-coated urea gave an improved yield of rough rice in comparison with a split application of uncoated urea. Sulfur was mixed with the uncoated urea to offset any sulfur response.

Good results also were obtained with rice in Lambayeque, Peru, during 1969-1970. Again, the water control was intermittent. Sulfur-coated urea was better than urea applied as a single dose or split applications.

It is estimated that sulfur coated urea will cost from 25% to 50% more per unit of nitrogen than uncoated urea. In some cases, this extra cost may be justified. For example, a single application of sulfur coated urea may be more economical than split applications of uncoated urea.

Other possibilities exist for the production of controlled release fertilizers (Figure 6). Three methods or approaches may be used. These are (1) use of a slowly soluble nitrogen source, (2) mechanically controlling the rate of dissolution such as by coating, and (3) inhibiting or slowing down the nitrification of the ammonium ion to the nitrate ion.

Some commercially available materials, such as ureaforms, oxamide, and metal ammonium phosphates, are classed as slowly soluble with dissolution rates dependent on particle size. However, most of these materials are too expensive for large-scale use as fertilizer.

Materials other than sulfur are also being tested as coating agents.

These include waxes, oils, resins, etc. However, sulfur is most favored because it is relatively inexpensive and is a plant nutrient.

Some companies are offering nitrification inhibitors which are supposed to retard the formation of the nitrate ion from the ammonium ion. Materials such as N-serve, cyanoguanidine, dicyandiamide, and AM are being tested. As yet, none of these materials has gained widespread acceptance.

Let us deviate for a moment and discuss some materials which contain both nitrogen and phosphate. These materials are stimulating much interest in the fertilizer industry. I'm referring to fertilizers based on polyphosphates.

When we take two molecules of H_3PO_4 and remove one molecule of water, we form a pyrophosphate (Figure 7). This can be continued to give tripoly and longer chains connected by P-O-P bonds. Through reaction of polyphosphates with materials such as ammonia or urea, complex fertilizers are formed. Fertilizers based on polyphosphates can be in the form of fluids or solids.

Superphosphoric acid is derived from concentration of wet-process acid or by the reaction of phosphorus pentoxide with less than the required amount of water to make orthophosphate. This superphosphoric acid is ammoniated to form a base for production of fertilizers.

Liquid fertilizers based on polyphosphates are excellent carriers of zinc and other micronutrients. Tests are underway to learn more of the mechanisms through which plants utilize polyphosphates.

Let us return again to straight nitrogen materials and discuss briefly production and use of solutions. Nitrogen solutions consist of aqueous solutions of ammonia, urea, ammonium nitrate, and water in various combinations and proportions. Nitrogen solutions were developed for use in making solid and liquid fertilizers. However, a market soon developed for them for direct application. After all, these solutions do not cake or dust,

are easily handled, and can even be applied in irrigation water.

One of the simplest solutions is aqua ammonia made by mixing anhydrous ammonia with water (Figure 8). It usually contains about 20% NH_3 and is used as such. This is a low-pressure solution and can be stored in liquid fertilizer tanks.

A very popular nitrogen solution is urea-ammonium nitrate. Solutions of urea and ammonium nitrate are mixed with water in controlled proportions (Figure 9). It is necessary to cool the product before storage. A low-pressure (essentially nonpressure) solution containing 32% nitrogen is very popular for making liquid fertilizers and for direct application. The 32% solution has a salting-out temperature of 0° C. and a very low pressure at 40° C. These solutions can also be used for granulation processes where anhydrous ammonia is not available. Free ammonia in the solutions generally increases the vapor pressure.

I'm sure you agree that much research remains to be done in nitrogen fertilizer technology. I have deliberately omitted reference to what we at TVA refer to as "exotic" fertilizer compounds such as ammonium tetrametaphosphate, phosphoryl triamide, and phosphonitrilic hexaamide. Materials such as this have ultra-high analysis, but at this time are only in the infant stage.

For the present, it appears that most fertilizers containing only nitrogen will be based on ammonia, urea, ammonium nitrate, and ammonium sulfate. Efforts will be directed toward improving these materials and the processes for their production. It is unlikely that a totally new nitrogen material will be introduced in the next few years, although some materials now in the experimental pilot plant stage may be adopted commercially.

I should point out that many of the materials discussed today are available in small quantities from TVA for agronomic research purposes. Anyone desiring small samples should make a formal request directly to TVA giving a brief outline of the intended use.

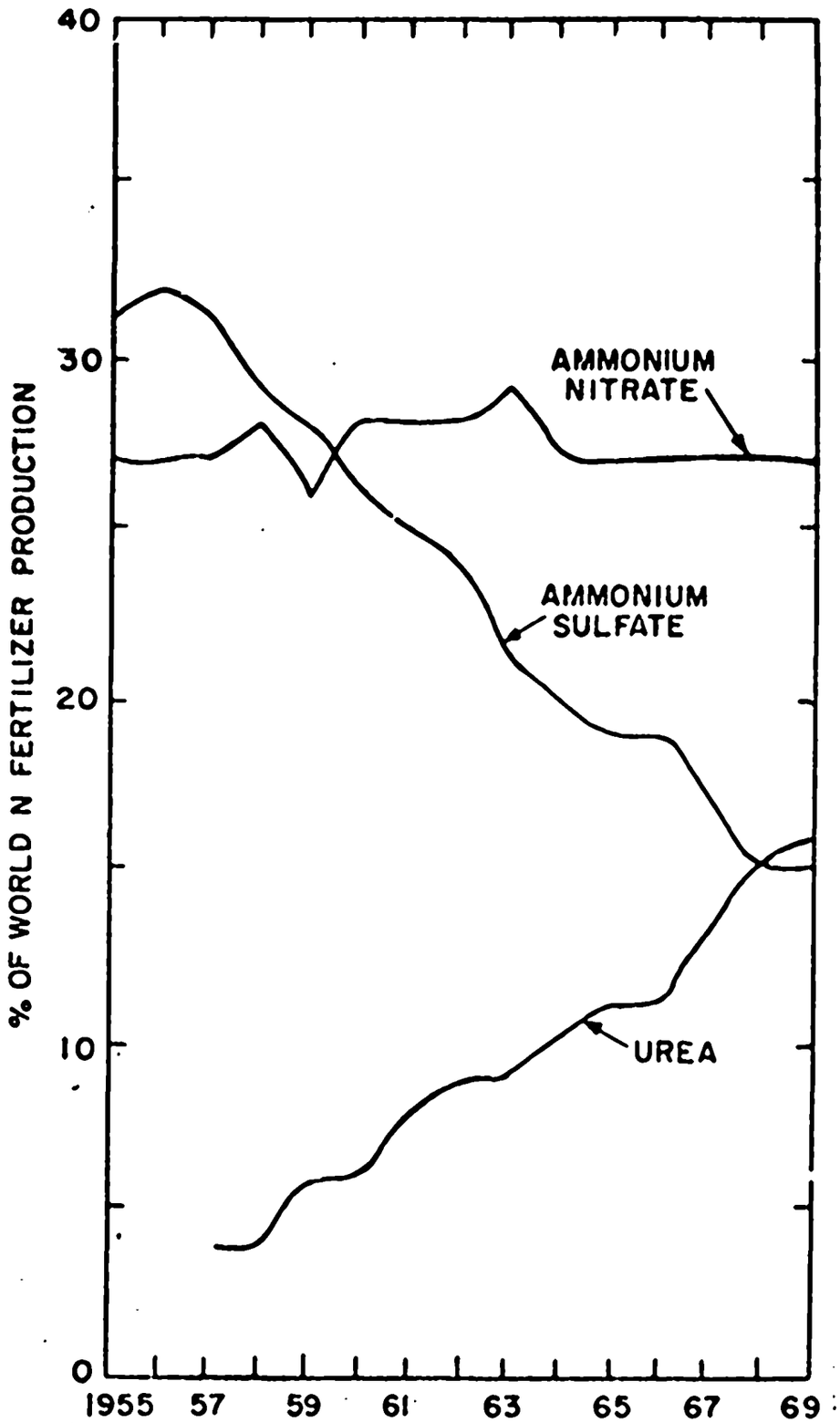

WORLD TRENDS IN TYPES OF NITROGEN FERTILIZERS

FIGURE 1

FIGURE 2

ANALYSES OF UREA-AMMONIUM SULFATE PRODUCTS MADE BY OIL-PRILLING PROCESS

GRADE	34-0-0-(9S)	40-0-0-(4S)
AMMONIUM SULFATE, % BY WT.	44	20
PRILLING OIL	MINERAL SEAL G	3190H
CHEMICAL ANALYSIS, % BY WT.		
TOTAL N	33.7	39.0
NH_3-N	9.1	5.0
TOTAL S	10.4	6.2
H_2O	0.3	0.2
OIL	2.5	1.6
BIURET	0.8	1.1
BULK DENSITY, LB/CU. FT)	51	50
SCREEN ANALYSIS, (TYLER), %		
+6 MESH	1	4
−6 +10 MESH	64	71
−10 +12 MESH	8	7
−12 MESH	27	18
ANGLE OF REPOSE, DEGREES	32	35

FIGURE 3

ANALYSES OF UREA-AMMONIUM SULFATE MADE BY PAN GRANULATION PROCESS

GRADE	40-0-0 (4S)
AMMONIUM SULFATE, % BY WT.	20
CHEMICAL ANALYSIS, % BY WT.	
TOTAL N	40.9
S	4.8
H_2O	0.3
SCREEN ANALYSIS, % BY WT	
+5 MESH	0.1
−5 +6 MESH	5.5
−6 +8 MESH	71.4
−8 +10 MESH	23.0
−10 MESH	0.0
BULK DENSITY, LB./CU. FT.	40-42

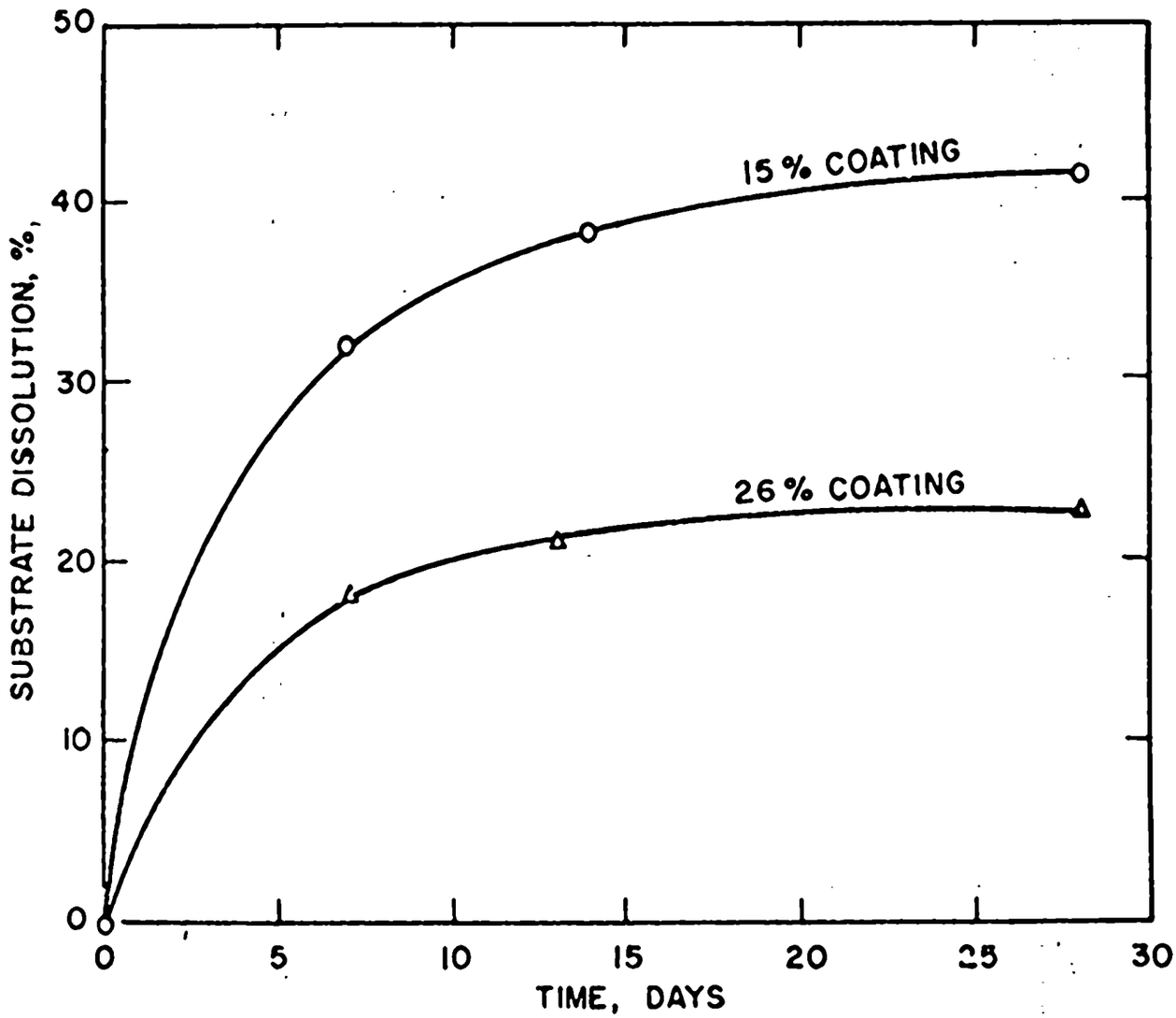

EFFECT OF TIME ON SUBSTRATE DISSOLUTION IN WATER AT 100°F

FIGURE 4

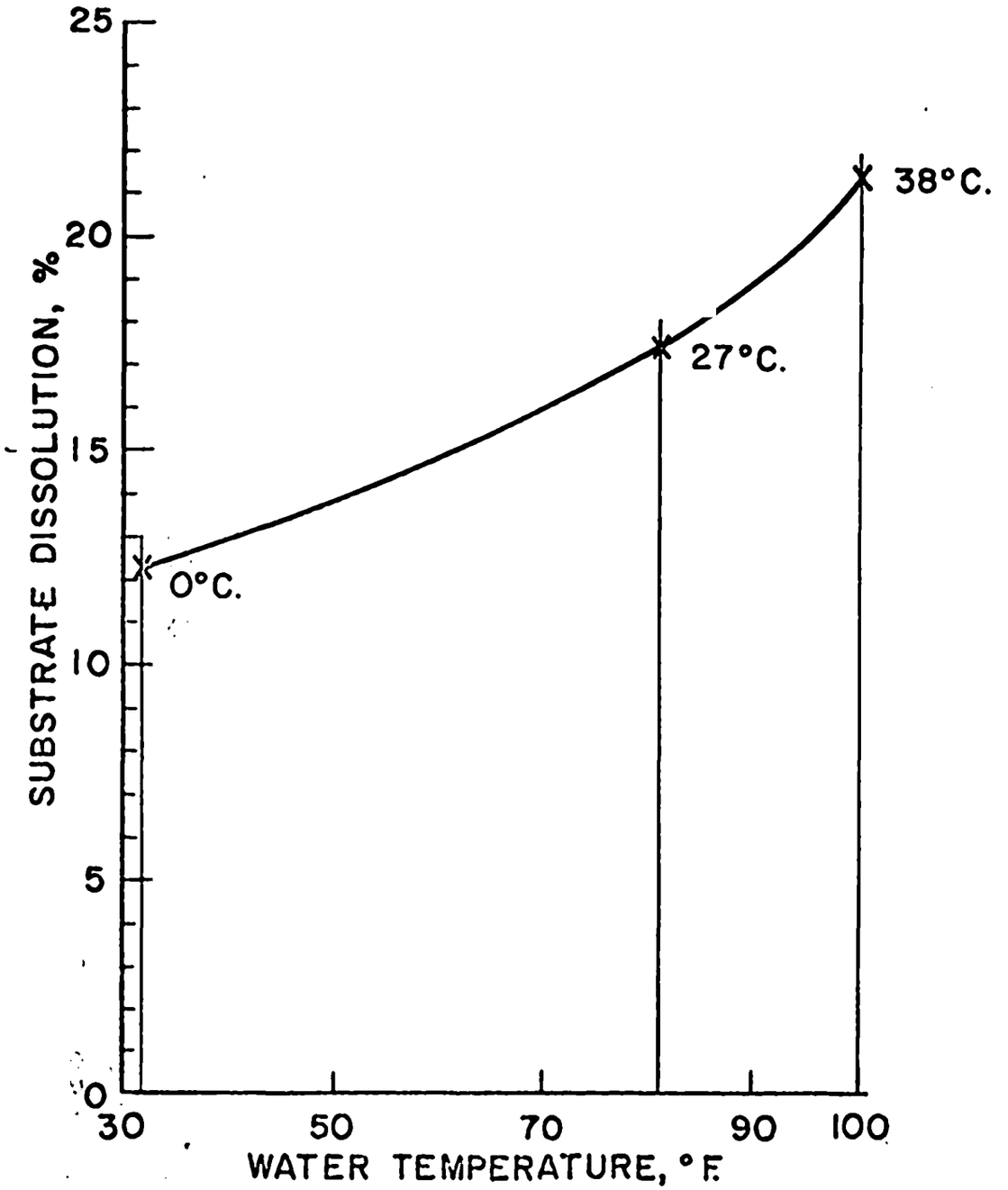

EFFECT OF WATER TEMPERATURE ON
DISSOLUTION RATE WITH 23% TOTAL COATING IN 14 DAYS

FIGURE 5

FIGURE 6

EXAMPLES OF CONTROLLED RELEASE MATERIALS

(1) SLOWLY-SOLUBLE FORMS

- (a) UREA-FORMS
- (b) CROTONYLIDINE DIUREA
- (c) TRIAZINES
- (d) ISOBUTYLENE DIUREA
- (e) OXAMIDE
- (f) METAL AMMONIUM PHOSPHATES

(2) NITRIFICATION INHIBITORS

- (a) N-SERVE
- (b) CYANOGUANIDINE
- (c) DICYANDIAMIDE
- (d) AM

(3) COATING MATERIALS

- (a) WAXES
- (b) NATURAL AND SYNTHETIC POLYMERS
- (c) OILS
- (d) ASPHALT
- (e) SULFUR

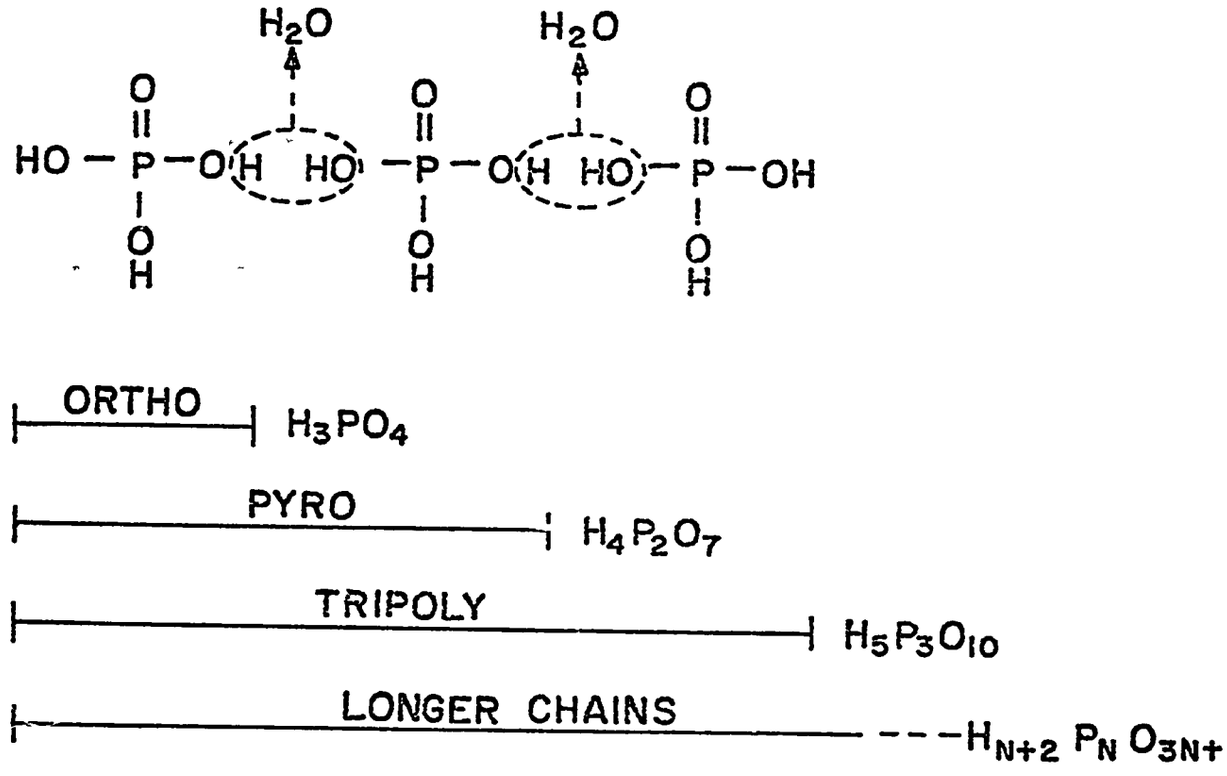

BUILDING BLOCKS FOR POLYPHOSPHATES

FIGURE 7

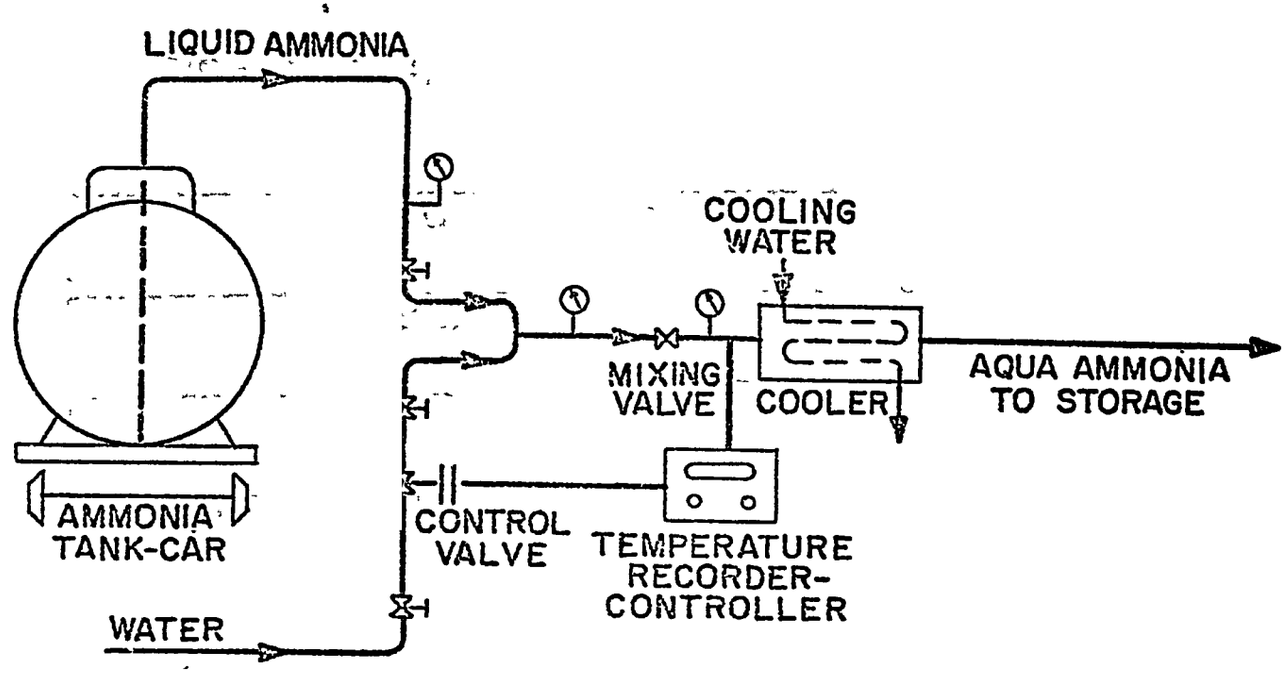

PRODUCTION OF AQUA AMMONIA
FIGURE 8

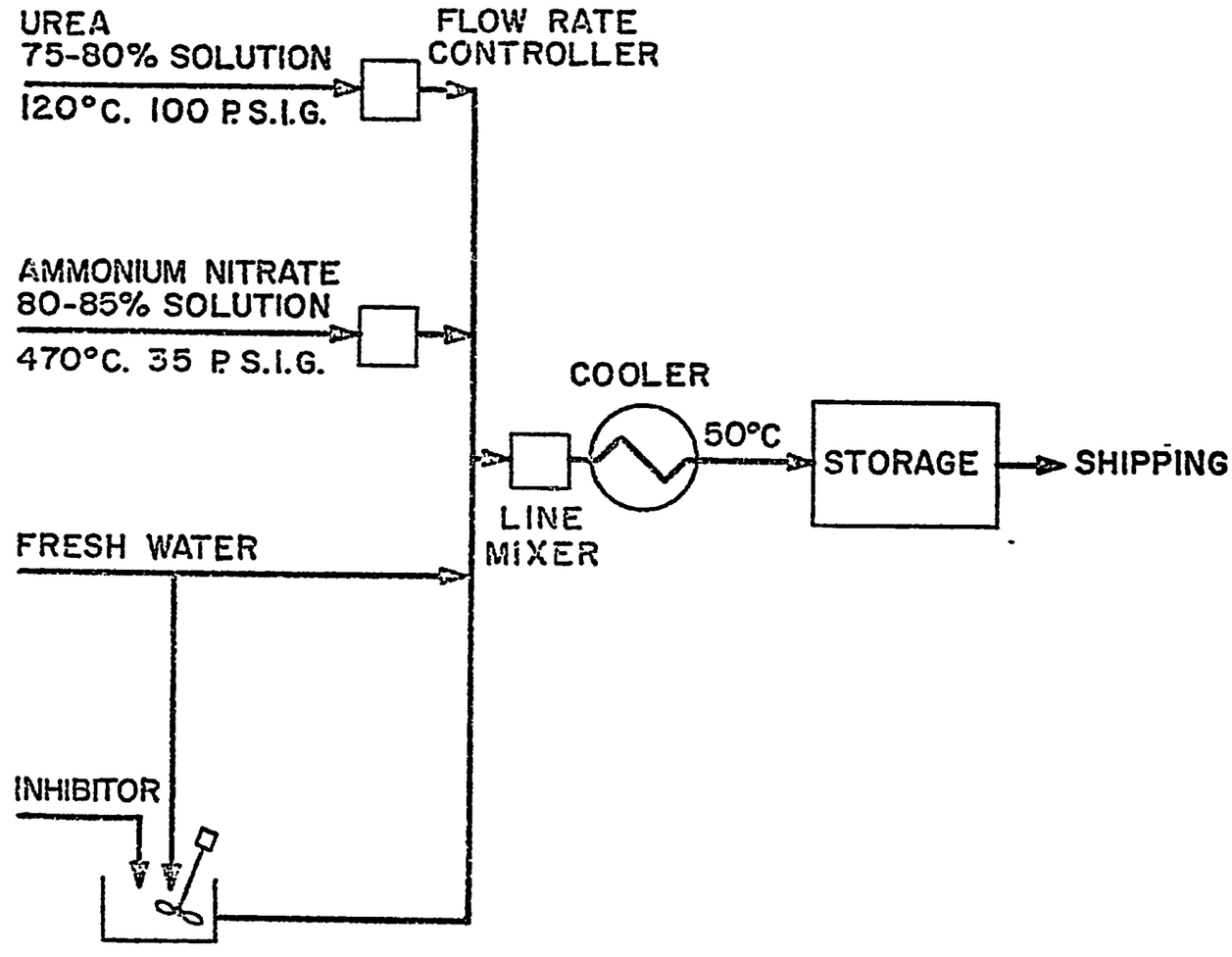

PRODUCTION OF UREA-AMMONIUM NITRATE SOLUTION
FIGURE 9