AGENCY FOR INTERNATIONAL DEVELOPMENT
WASHINGTON, D. C. 20523

BIBLIOGRAPHIC INPUT SHEET

FOR AID USE ONLY
0098

1. SUBJECT CLASSIFICATION

A. PRIMARY
Agriculture AP10-0000-G518

B. SECONDARY
Water resources and management--Colombia

2. TITLE AND SUBTITLE
Combined surface water-groundwater analysis of hydrological systems with the aid of the hybrid computer

3. AUTHOR(S)
Morris,W.J.; Morgan,N.W.; Wang,Bi-huei; Riley,J.P.

4. DOCUMENT DATE	5. NUMBER OF PAGES	6. ARC NUMBER
1970	29p.	ARC 333.91.M877

7. REFERENCE ORGANIZATION NAME AND ADDRESS
Utah State

8. SUPPLEMENTARY NOTES *(Sponsoring Organization, Publishers, Availability)*
(Presented at 4th Latin Am.Cong.on Hydraulics,Mexico City)

9. ABSTRACT

10. CONTROL NUMBER	11. PRICE OF DOCUMENT
PN-RAA-047	
12. DESCRIPTORS	**13. PROJECT NUMBER**
Colombia	
Computer programs	**14. CONTRACT NUMBER**
Ground water	CSD-2167 Res.
Hydraulic models	**15. TYPE OF DOCUMENT**
Surface water runoff	

AID 590-1 (4-74)

ABSTRACT

COMBINED SURFACE WATER-GROUNDWATER ANALYSIS OF HYDROLOGICAL SYSTEMS WITH THE AID OF THE HYBRID COMPUTER[1]

by

W. James Morris[2], Neil W. Morgan[3], Bi Huei Wang[4], and J. Paul Riley[5]

The solution of the partial and total differential equations for an integrated surface water-groundwater system with the aid of the hybrid computer is described.

A versatile computing technique has been developed to make a rapid and accurate study of the groundwater response due to varying inputs (deep percolation) or outputs (evapotranspiration) from the groundwater system. Areal variations in input parameters such as vegetation, crop patterns, hydrological parameters, and boundary conditions are represented by a grid network. The technique, developed for the analysis of a surface water-groundwater system in Colombia, South America provides the water resources engineer with valuable information in appraising various development alternatives under conditions of irrigated agriculture.

---

[1]The work described herein was financed by the U.S. Agency for International Development under Contract No. AID/csd 2167. The paper was prepared for presentation at the IV Latin American Congress on Hydraulics in Mexico City, August 1970.

---

[2]Visiting Professor (from City University, London), Civil Engineering, Utah Water Research Laboratory, Utah State University, Logan, Utah.

[3]Lecturer, Electrical Engineering, Utah State University, Logan, Utah.

[4]Research Engineer, Utah Water Research Laboratory, Utah State University, Logan, Utah.

[5]Associate Professor, Agricultural and Irrigation Engineering, Utah State University, Logan, Utah.

PARTIAL LIST OF SYMBOLS*

Symbol		Definition
DP	=	Deep percolation
E_t	=	$E_{t1} + E_{t2}$
E_{t1}	=	Evapotranspiration supported by soil moisture
E_{t2}	=	Evapotranspiration supported by groundwater
Et_p	=	Potential evapotranspiration
E_v	=	Pan evaporation
I_s	=	Interception storage
I_{gs}	=	Water input to ground surface
I_{sc}	=	Interception storage capacity
I_t	=	Interception
K	=	Crop coefficients
M_s	=	Soil moisture above wilting point
M_{es}	=	Soil moisture level in excess of the wilting point at which soil moisture supplies begin to limit potential evapotranspiration
P_r	=	Precipitation
Q_{irr}	=	Water input by irrigation
Q_{lgi}	=	Lateral groundwater inflow
Q_s	=	Surface drainage from the surrounding areas
S_g	=	Groundwater storage

*Symbols not included in this list are defined within the text of the report.

COMBINED SURFACE WATER-GROUNDWATER* ANALYSIS OF HYDROLOGICAL SYSTEMS WITH THE AID OF THE HYBRID COMPUTER

Introduction

The continuously increasing demands on our limited water resources have necessitated using modern computing techniques to make effective use of these resources. The advent of the hybrid computer has made possible the rapid solution of complex water resource systems and the continuous display of these solutions for verification or optimization studies. For water resource management purposes it is necessary to analyze the combined surface water-groundwater system rather than carrying out separate analyses for each system.

For instance, under conditions of irrigated agriculture there exists a groundwater level above which crop growth is inhibited. The proper management of groundwater systems for agriculture and other purposes requires an understanding of the factors that control the water levels in these aquifers including the net input or output to groundwater from the continuous hydrologic processes that occur in the surface water system. A hybrid computer model enables a rapid appraisal of these factors and provides a means of predicting future water levels under various management alternatives.

Historically the surface water supplies in most areas have been developed first and the groundwater resource has been considered only when the surface supply has proved inadequate to meet the demand. There is now

---

*Groundwater system - considered as all water within saturated zone.
Surface water system - unsaturated zone and hydraulic and hydrologic processes at ground level.

growing recognition that groundwater resources have many inherent advantages, particularly for storage purposes. However, the efficient utilization of the groundwater resources of an area usually requires that both surface and groundwater supplies be considered as one integrated system.

Objective

The general objective of the present study is to investigate the fluctuations of the groundwater levels in the study area (see Figure 1) under various conditions of land use. Substitution of the native phreatophyte vegetation by agricultural crops reduces extraction from groundwater supplies. Groundwater levels are also influenced by irrigation of agricultural crops. The computer simulation study discussed herein was therefore proposed to provide estimates of attenuation rates and equilibrium levels of the groundwater under various management alternatives, such as areal variations of native vegetation and crop patterns and varying irrigation application rates.

Study Area

The project required the simulation of the groundwater levels in a region near the coast of north western Colombia, South America. The boundary and groundwater conditions for the 300 square kilometer area (approximate) are shown by Figure 1. For purposes of spatial definition a rectangular grid was superimposed on the area as shown by Figure 1. The land is mainly low-lying with little variation in elevation, and there are no major surface streams. Vegetative cover is currently largely native but the area has been designated for extensive agricultural development.

The groundwater basin beneath this area is recharged by inflows from the river, canal, reservoir, and mountins to the north, and by deep percolation

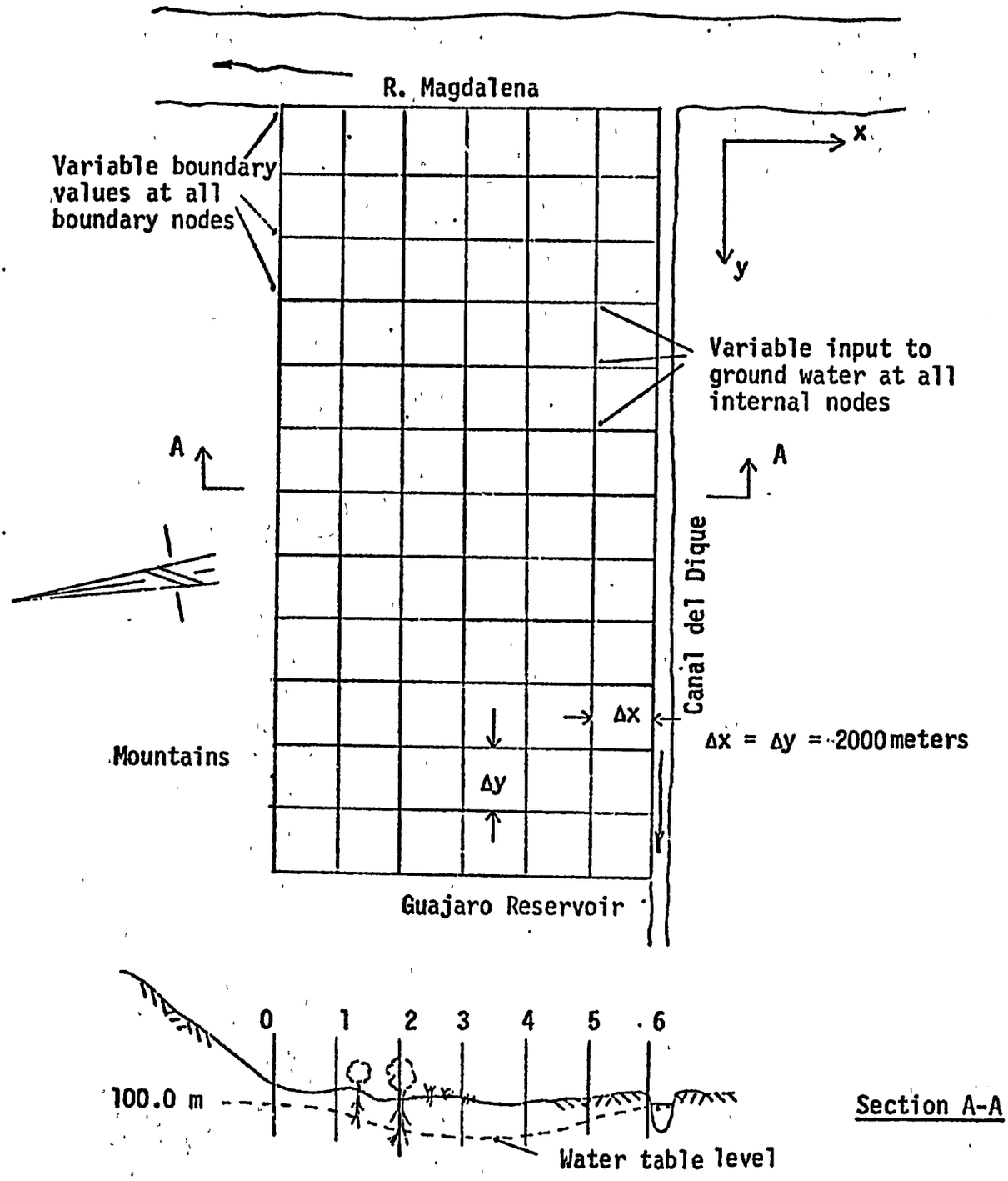

Figure 1. Plan and section of the study area.

from the land surface during the wet season when precipitation rates exceed evapotranspiration. The depth to groundwater as shown on Section A-A (plotted from observations during January 1969) varies between one meter at the edge to 10 meters at the center. Superimposed on this general groundwater pattern are a number of localized areas of high and low water levels which indicate localized recharge from swamps or evapotranspiration by native phreatophytes. Extractions from the groundwater basin occur as transpiration by deep rooted phreatophytic vegetation. These losses maintain groundwater levels at approximately 10 meters beneath the land surface at the center of the area. Thus, unless a drainage system is provided the substitution of large areas of native vegetation by relatively shallow-rooted agricultural crops likely will eventually produce undesirably high water table levels. The problem is further compounded because irrigation of agricultural crops is necessary in this region, and the unused irrigation waters deep percolating to the saturated zone will accelerate the rise of water table levels.

Theoretical Considerations

Surface Water System. For the particular area under consideration, no surface outflow from the area occurs. Therefore, all of the water input to the area either is lost by evaporation or enters the unsaturated groundwater regime through infiltration. A portion of the water in the unsaturated zone is abstracted by the process of evapotranspiration. The remainder moves downward by deep percolation to the saturated groundwater regime.

There are numerous methods available to estimate the rate of evapotranspiration. These methods have found application to particular problems but are not generally applicable for all purposes. For the problem under

study, the following formula is considered applicable (Christiansen and Hargreaves, 1969).

$$Et_p = KE_v \quad \ldots\ldots\ldots\ldots\ldots\ldots\ldots (1)$$

in which Et_p = estimated potential evapotranspiration

E_v = pan evaporation, and

K = an experimentally determined crop coefficient which is dependent upon crop species and stage of growth.

The actual evapotranspiration is usually less than the potential evapotranspiration when soil moisture is limited. Many approaches have been proposed by different investigators to relate the actual evapotranspiration and the potential evapotranspiration. For the problem under study, the linear relationship introduced by Thornthwaite and Mather (1955) is assumed applicable. The actual evapotranspiration thus can be estimated as follows:

$$E_t = Et_p \qquad \text{when } M_s \geq M_{es} \quad \ldots\ldots\ldots (2)$$

$$E_t = Et_p \frac{M_s}{M_{es}} \qquad \text{when } M_s < M_{es} \quad \ldots\ldots\ldots (3)$$

Evapotranspiration losses may be derived from either above or below a water table (or both) depending upon the type of vegetation, soil moisture content, and depth to the groundwater table. For the present study, the assumption was made that the cultivated crops draw water from only the unsaturated soil and that the deep-rooted native plants are phreatophytic in nature and derive water from both above and below the groundwater table.

Groundwater system. The following discussion briefly describes the development of the mathematical equations used in this study to express the movement of water within the saturated zone. A section through the aquifer in the study area is shown by Figure 2.

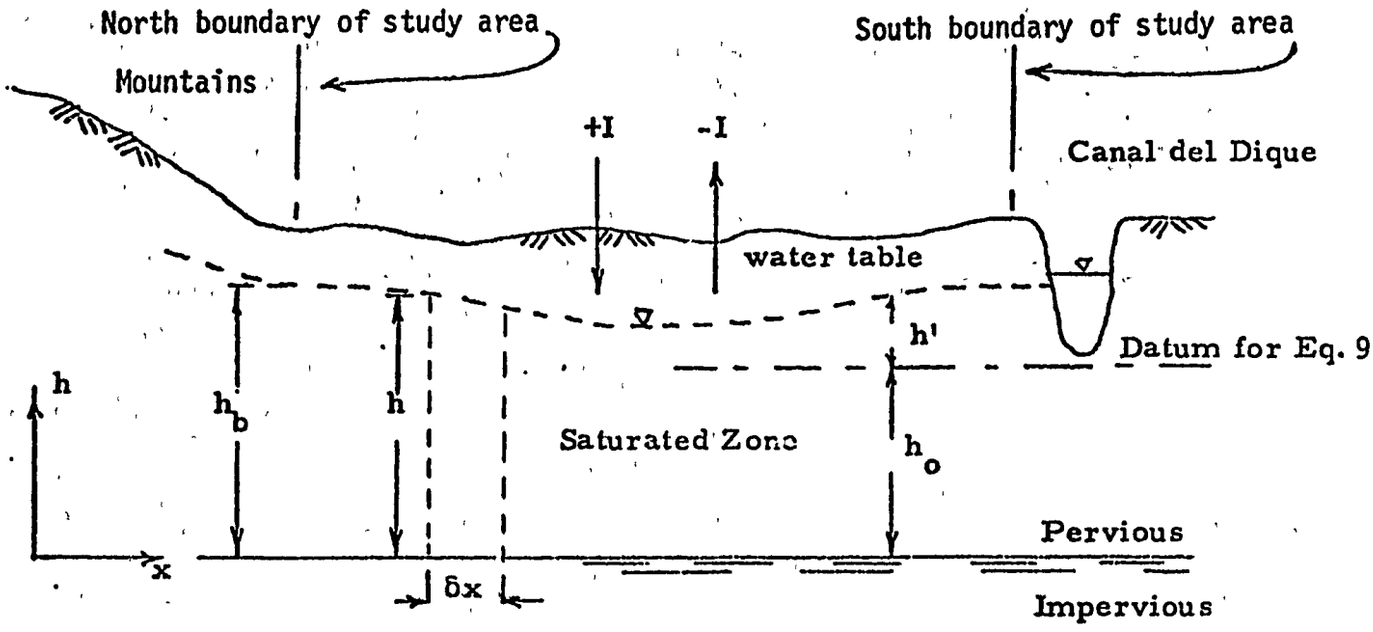

Figure 2. Section through the aquifer in the study area.

Consider a three dimensional element of the aquifer as shown by Figure 3. The various symbols indicated in Figures 2 and 3 are defined as follows:

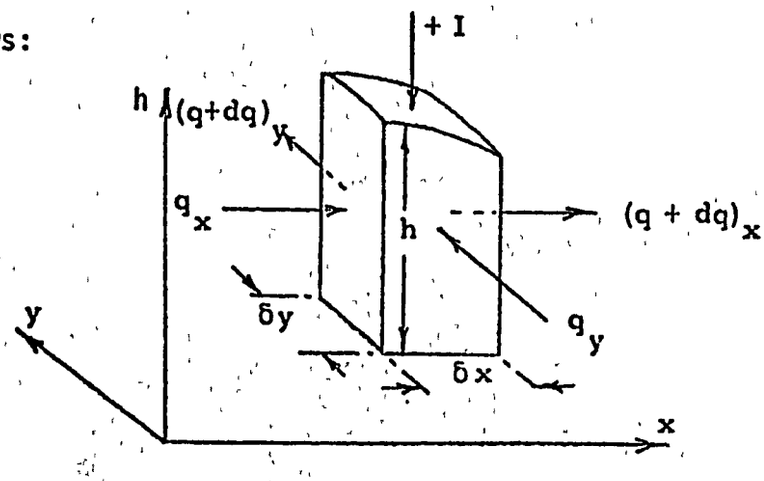

Figure 3. An elemental volume from the aquifer in the study area.

q_x = the flow in the x direction

q_y = the flow in the y direction

h = the head of water at any point in the aquifer above the impermeable layer

h_b = the boundary value of h

$\pm I$ = the input to (+) or output (-) from the surface water

The following assumptions are made in the derivation of the groundwater flow equation:

1. Isotropic unconfined aquifer
2. Homogeneous porous media
3. Flow lines horizontal
4. Uniform velocity over depth of flow proportional to the slope of the groundwater surface (Darcy's Law)
5. Compressibility effects neglected
6. Effective porosity, e = storage coefficient, S

From the principle of continuity, for an incremental time period δt,

$$q_x \delta t + q_y \delta t \pm I \delta x \delta y \delta t = (q + \delta q)_x \delta t + (q + \delta q)_y \delta t + e \delta h \delta x \delta y$$

$$\frac{\partial q_x}{\partial x \partial y} + \frac{\partial q_y}{\partial x \partial y} \pm I = - e \frac{\partial h}{\partial t} \quad \ldots\ldots\ldots\ldots (4)$$

From the Darcy equation:

$$q_x = - k(h \partial y) \frac{\partial h}{\partial x} \quad \text{and} \quad \frac{\partial q_x}{\partial x \partial y} = - \frac{1}{2} k \frac{\partial^2 (h^2)}{\partial x^2} \quad \ldots (5)$$

where k is the coefficient of permeability.

Similarly,

$$\frac{\partial q_y}{\partial x \partial y} = -\frac{1}{2} k \frac{\partial^2(h^2)}{\partial y^2} \quad \ldots\ldots\ldots\ldots\ldots (6)$$

Substituting Equations (5) and (6) in Equation (4) yields:

$$\frac{\partial^2(h^2)}{\partial x^2} + \frac{\partial^2(h^2)}{\partial y^2} \pm \frac{2I}{k} = \frac{2e}{k}\frac{\partial h}{\partial t} = \frac{S}{T}\frac{\partial(h^2)}{\partial t} \quad \ldots\ldots\ldots (7)$$

where $T = kh$ is the transmissivity of the aquifer.

Expanding Equation (7) gives:

$$2h\frac{\partial^2 h}{\partial x^2} + 2\left(\frac{\partial h}{\partial x}\right)^2 + 2h\frac{\partial^2 h}{\partial y^2} + 2\left(\frac{\partial h}{\partial y}\right)^2 \pm \frac{2I}{k} = \frac{2e}{k}\frac{\partial h}{\partial t} \quad \ldots\ldots (8)$$

Neglecting $\left(\frac{\partial h}{\partial x}\right)^2$ and $\left(\frac{\partial h}{\partial y}\right)^2$ and substituting $\frac{\partial^2 h}{\partial x^2} = \frac{\partial^2 h'}{\partial x^2}$,

$\frac{\partial^2 h}{\partial y^2} = \frac{\partial^2 h'}{\partial y^2}$, and $\frac{\partial h}{\partial t} = \frac{\partial h'}{\partial t}$ in Equation (8) gives:

$$\frac{\partial^2 h'}{\partial x^2} + \frac{\partial^2 h'}{\partial y^2} \pm \frac{I}{T} = \frac{e}{kh}\frac{\partial h'}{\partial t} = \frac{S}{T}\frac{\partial h'}{\partial t} \quad \ldots\ldots (9)$$

where h' is the height of the water table above a particular datum situated a distance h_0 above the impermeable layer.

Equation (7) is the complete equation in that no terms are neglected in its derivation and Equation (9) is its linearized version. Errors due to neglecting the terms $\left(\frac{\partial h}{\partial x}\right)^2$ and $\left(\frac{\partial h}{\partial y}\right)^2$ only become appreciable for large

water surface slopes which are not typical of the groundwater levels in the study area. Measuring water table fluctuations from a fixed height, h_o, above the impermeable layer improves computing accuracy in that the full dynamic range of the analog component in the computer is utilized.

Hybrid computer Implementation of Model

A schematic flow diagram of the surface water-groundwater system is shown by Figure 4, and each component of this system will be briefly discussed. The spatial unit adopted for the model was 2,000 meters as shown by Figure 1. A one month time increment was used. All data input to the model were averaged values on the basis of the space and time scales adopted. Data are input to the model through the digital component of the hybrid computer.

Unsaturated Regime. The input data are precipitation, temperature, pan evaporation, crop densities, crop coefficients, soil moisture holding capacity, initial soil moisture content, and irrigation rates. Digital computations are made to determine the amount of water applied to the soil surface, the extraction from groundwater storage, and the initial soil moisture content and this information is then transferred to the analog component. The processes of evapotranspiration and percolation are simulated by the analog component and transferred back to the digital device as shown in Figure 5. Typical computer output for the model of the unsaturated regime is shown by Table 1.

Saturated Regime. The computation method used to model the groundwater system is an iterative adaptation of the usual all-analog method commonly employed in solving the diffusion equation. This technique allows the sharing of the analog equipment required for each spatial division, and thus essentially replaces the need for large quantities of analog computing

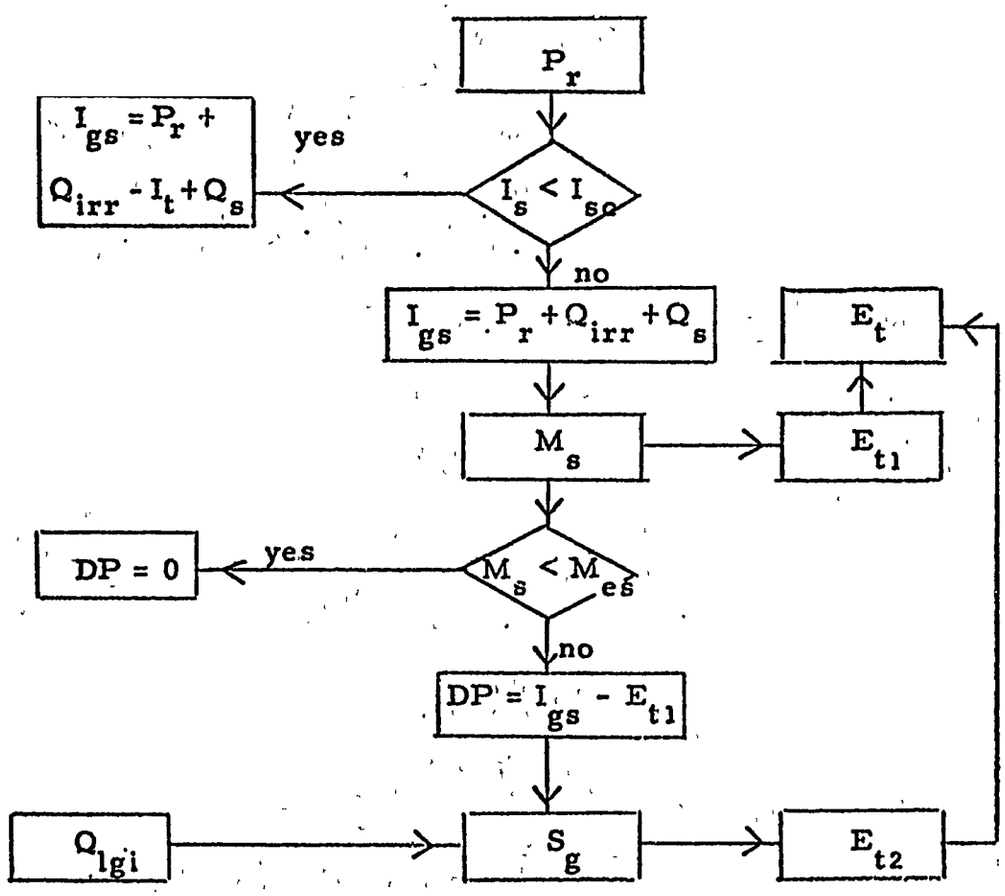

Figure 4 . Schematic diagram of the surface water-groundwater system for Atlantico 3 Project.

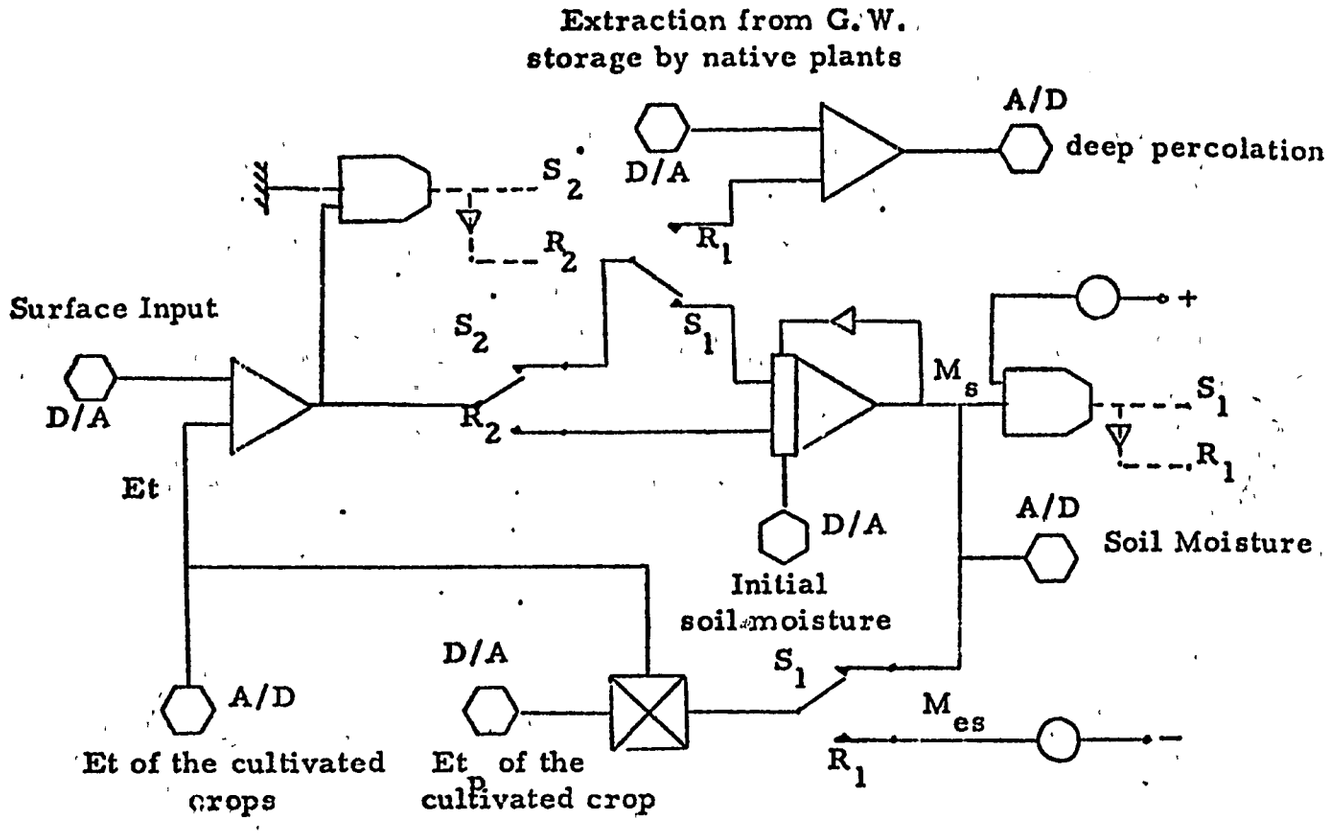

A/D Analog to Digital

D/A Digital to Analog

Fig. 5. Analog circuit for surface water system.

Table 1. Typical computer output for the model of the unsaturated regime.

PT. 30 FMES = 240. FIC = 120. DDP = .35

The Year of 1969

Month	PPT	EVP	CSH	CDP	QIR	AET	DPT	FMS	FDP
1	28.	167.	.10	.80	0.	49.	40.	139.	-40.
2	0.	186.	.10	.85	0.	56.	45.	127.	-45.
3	55.	204.	.10	.90	0.	69.	49.	166.	-49.
4	89.	199.	.20	.95	0.	87.	48.	220.	-48.
5	112.	163.	.20	1.00	0.	73.	39.	240.	18.
6	113.	155.	.20	.95	0.	66.	37.	240.	46.
7	91.	199.	.20	.90	0.	83.	48.	240.	7.
8	193.	176.	.20	.85	0.	70.	43.	240.	122.
9	125.	185.	.20	.80	0.	71.	45.	240.	53.
10	144.	169.	.20	.75	0.	62.	41.	240.	81.
11	83.	113.	.20	.70	0.	39.	27.	240.	43.
12	0.	142.	.10	.75	0.	45.	34.	229.	-34.

PT. 31 FMES = 240 FIC = 120 DDP = .30

FMES = Available soil moisture storage capacity above wilting point, in mm.

FIC = Initial soil moisture content above wilting point, in mm.

DDP = Density of native vegetation.

PPT = Monthly precipitation, in mm.

EVP = Monthly pan evaporation, in mm.

CSH = Coefficients for cultivated crops.

CDP = Coefficients for native vegetation.

QIR = Monthly irrigation, in mm.

AET = Monthly total evapotranspiration by native vegetation and cultivated crops, in mm.

DPT = Monthly transpiration by native vegetation, in mm.

FMS = Soil moisture content, in mm.

FDP = Deep percolation (+) to or transpiration from groundwater (-), in mm.

equipment. Results are stored by the digital computer.

The linear one-dimensional diffusion equation is expressed as:

$$\frac{\partial v}{\partial t} = \alpha \frac{\partial^2 v}{\partial x^2} \quad \ldots\ldots\ldots\ldots\ldots\ldots (10)$$

If the second derivative in the spacial dimension is approximated by a central difference, a system of simultaneous ordinary differential equations is obtained, thus:

$$\frac{dv_j}{dt} + \frac{2\alpha}{(\Delta x)^2} v_j = \frac{\alpha}{(\Delta x)^2} \left(v_{j-1} + v_{j+1} \right) \quad \ldots\ldots (11)$$

In the all-analog method all equations of this system are solved simultaneously on the analog computer. A representative program of this nature is shown by Figure 6.

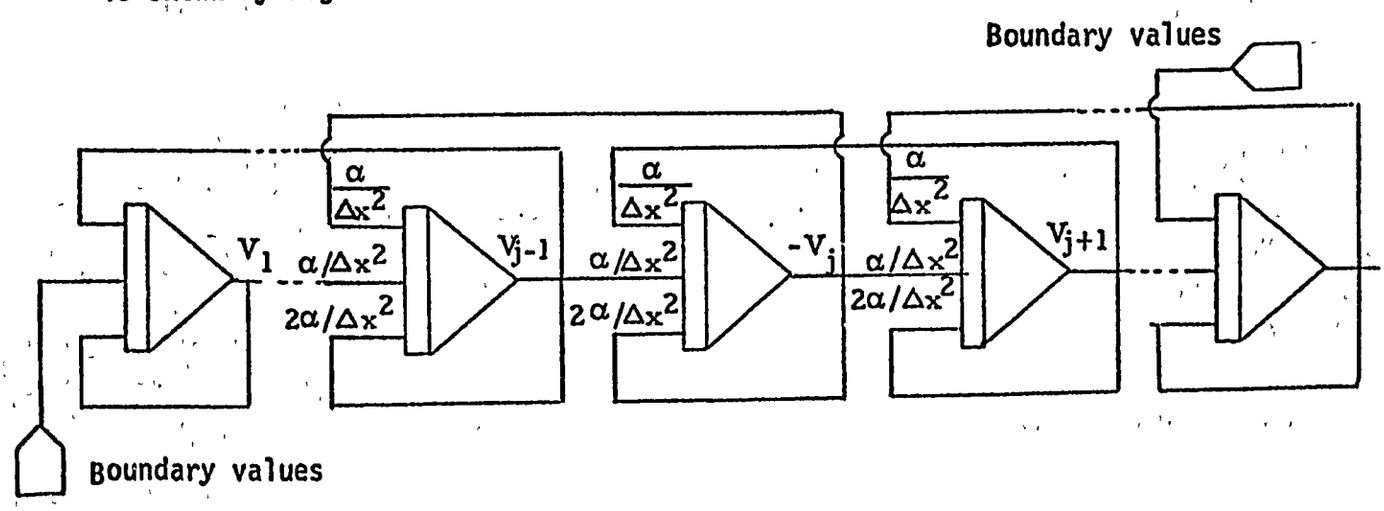

Figure 6. Analog computer program for groundwater flow in the saturated regime.

The hybrid approach used can be viewed as a means of inserting a sample and hold element in the lines representing signal flow from one cell to the adjacent cells. This in effect divides the time domain into intervals and information passed from one cell to the next is updated only at specified instants of time. Initial solutions are assumed at all nodes. A new solution is obtained at a particular node by integrating continuously in time for that particular node while inputting "staircase" functions from digital storage representing the solutions at adjacent nodes. This computation procedure is applied to all nodes continuing until convergence is reached. A one half time interval time advance is given to the sampled functions input from the digital computer to counteract time delays inherent in the sample and playback procedures (Hsu and Howe, 1968). Although the discussion has been made in terms of a one dimensional equation the procedures are easily extended to two or more dimensions. This technique is in many respects similar to the implicit difference scheme often employed in the all-digital solution of this type of equation and termed the Gauss-Seidel iteration technique. On the hybrid computer the solution is unconditionally stable and convergent for any incremental division of the space and time domains.

Using central finite differences Equation (9) can be expressed in the form:

$$\frac{dh'_{i,j,n}}{dt} = \frac{T}{S}\left\{\left[\frac{h'_{i-1,j,n} + h'_{i+1,j,n} + h'_{i,j-1,n} + h'_{i,j+1,n} - 4h'_{i,j,n}}{(\Delta x)^2}\right] \pm \frac{I}{T}\right\} \quad \ldots\ldots(12)$$

in which the terms $h'_{i-1,j,n}$, etc. are as shown by Figure 7.

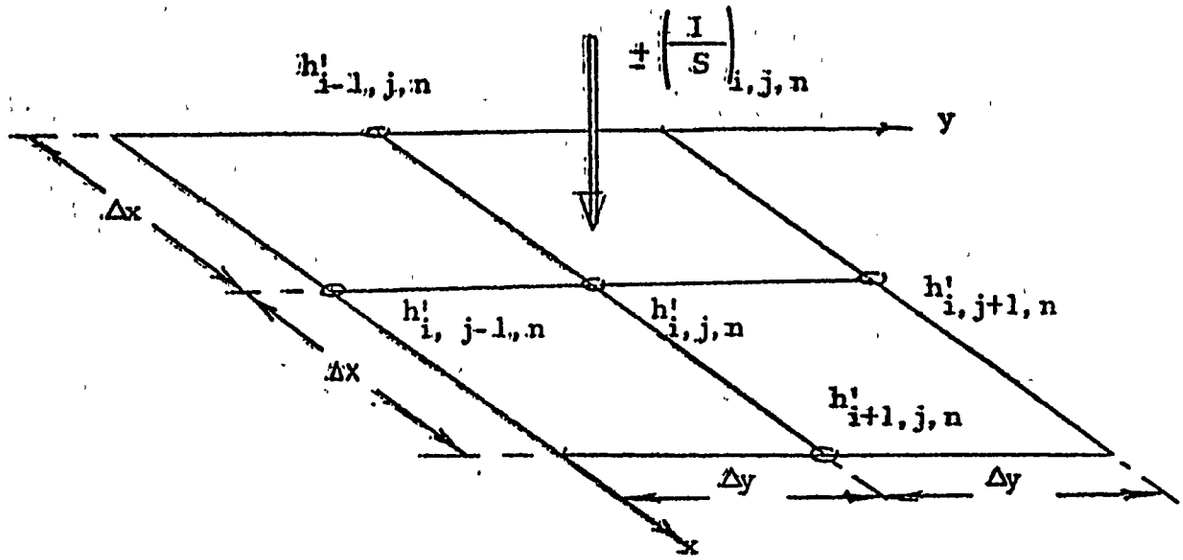

Figure 7. Diagram showing location of terms in Equation (12) on grid network.

Integrating Equation (12) gives:

$$h''_{i,j,n} = \int_0^t \frac{T}{S} \left\{ \left[\frac{h'_{i-1,j,n} + h'_{i+1,j,n} + h'_{i,j-1,n} + h'_{i,j+1,n} - 4h'_{i,j,n}}{(\Delta x)^2} \right] \pm \frac{I}{T} \right\} \quad \ldots\ldots (13)$$

The magnitude and time scaled version of Equation (13) can be implemented on the analog computer as shown in Figure 8. Note that only one integrator is required. With the aid of the digital computer this integrator can be moved along each node in turn, with the appropriate values of $h'_{i-1,j,n}$, etc. being provided from digital storage.

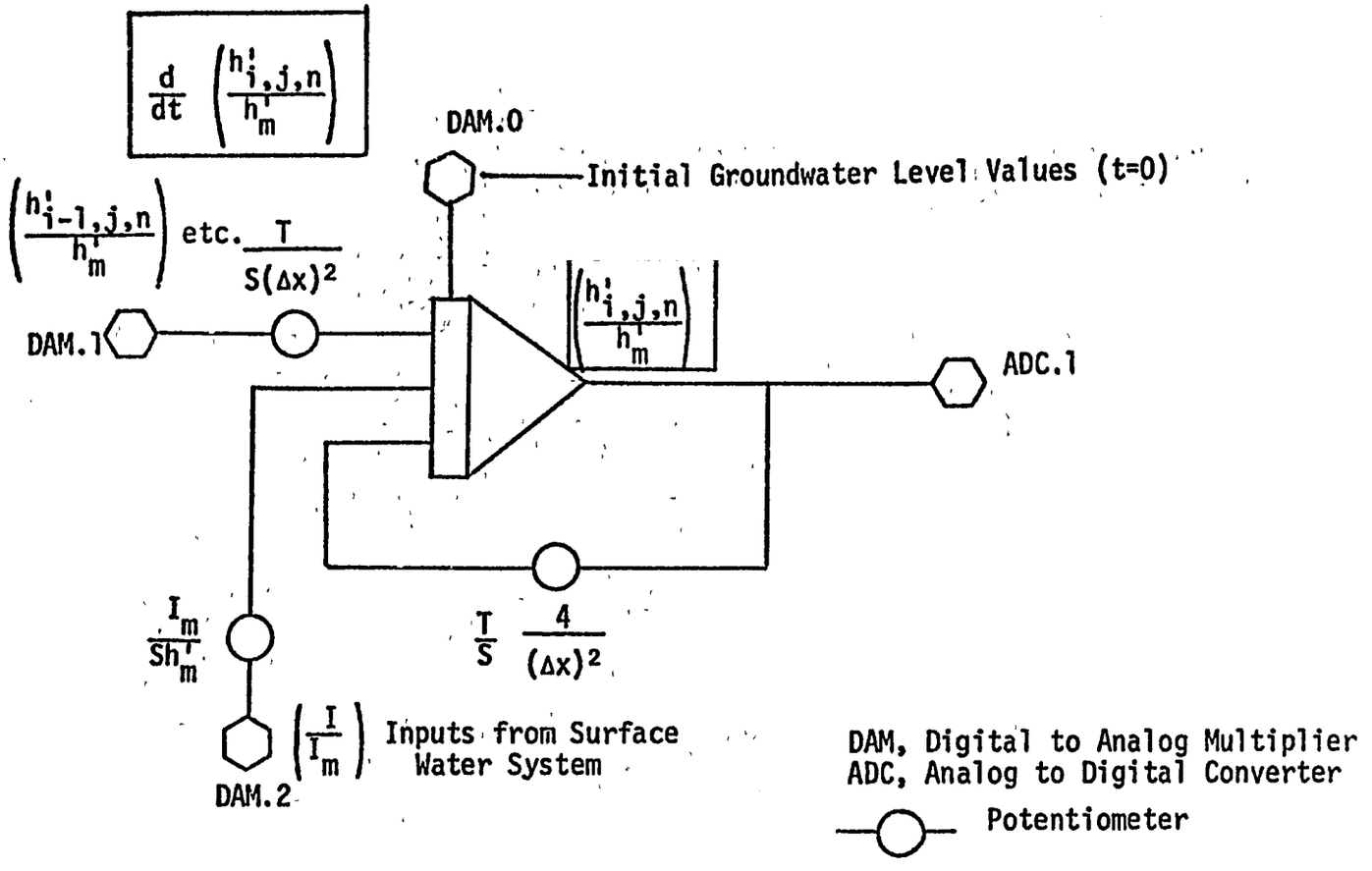

Figure 8. Scaled analog circuit for the solution of Equation (13) on the hybrid computer.

Integration at each node is carried out for a specific time period of for example, one year, and the values of h' corresponding to each time increment (one month) within the specified time period are stored by the digital computer (see Figure 9). The error e between successive h' versus t curves at each node is tested by the digital computer and a solution is obtained when Σe^2 becomes less than a specified tolerance.

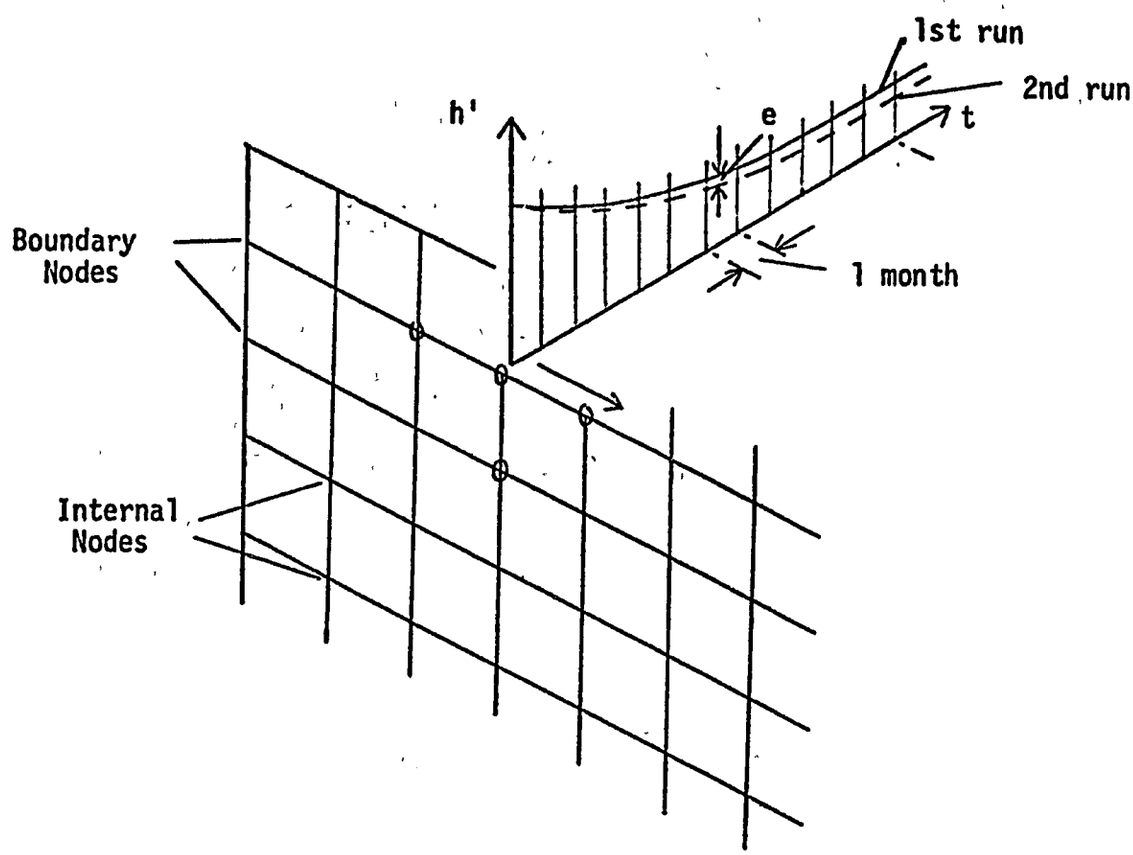

Figure 9. Diagram showing integration procedure.

Model Verification

Lack of adequate data on rainfall, evapotranspiration, rooting depths, areal distribution and type of vegetation, and aquifer properties meant that some gross assumptions had to be made at this stage. The model will be continually refined as further data become available. Groundwater contour maps prepared from levels taken from about 500 boreholes over a period of two years were available for the area.

The effects of the aquifer permeability ,K, and storage coefficient, S, were studied by varying one of these parameters at a time for an idealized aquifer with constant boundary conditions (water table level at 100 meters)

and constant initial conditions of the same value. The aquifer levels (see Figures 10 and 11) were plotted for a uniform net withdrawal from the groundwater basin, I, of 0.1 meters per month at each node. Figures 10 and 11 indicate that the parameter K determines the shape of the groundwater profile while S determines the level of the water in the aquifer (for a given I) and has a rather minor influence on shape.

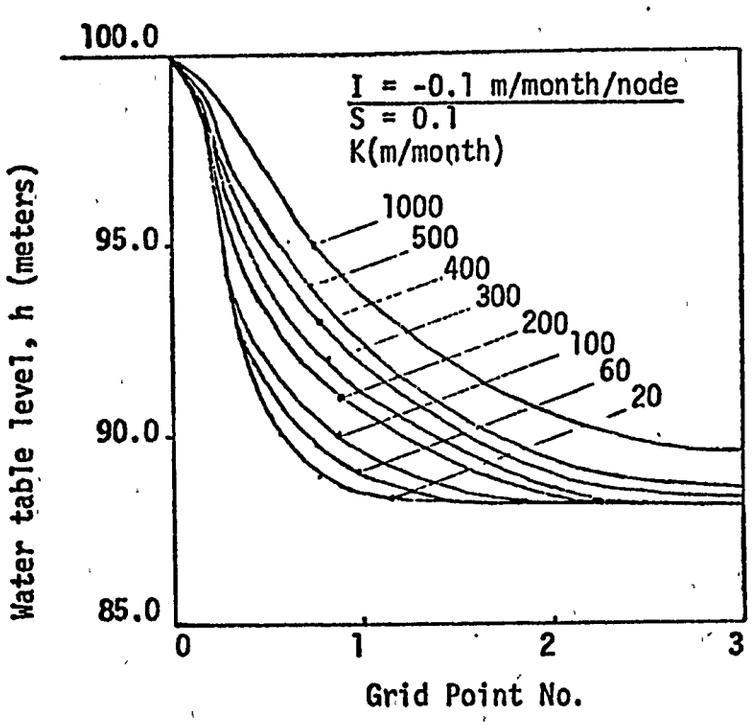

Figure 10. Diagram showing effect of varying K on water levels in idealized aquifer after 1 year.

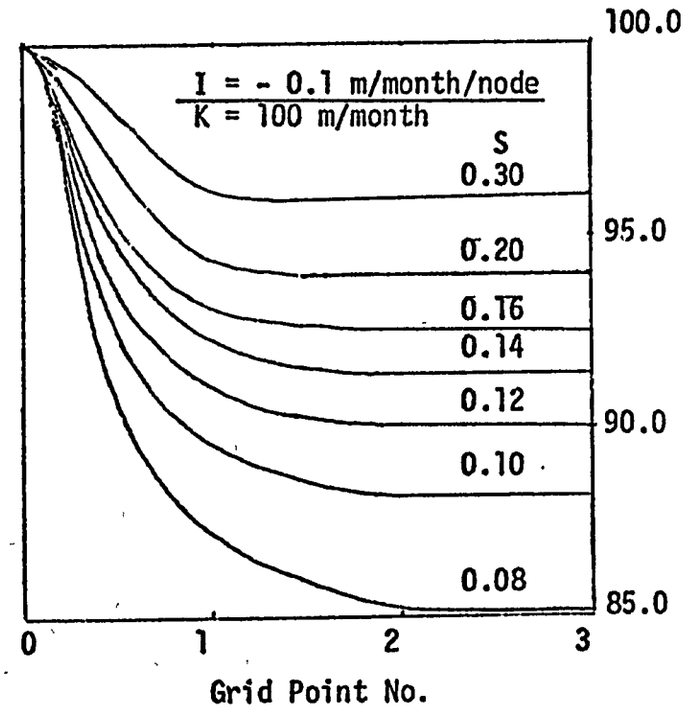

Figure 11. Diagram showing effect of varying S on water levels in idealized aquifer after 1 year.

The water table profile for an aquifer permeability of 200 meters per month corresponded closely with the observed profile in the existing aquifer. The value of the storage coefficient required to give water levels in close agreement with those in the aquifer was more difficult to determine as these levels also depend on I. However, a value of S equal to 0.1 gave reasonable values, and subsequent studies using the model were carried out using this value.

The above values for the aquifer parameters K and S were tested by a study of the growth and shape of the groundwater mounds and depressions. For example, a mound with a base width of approximately 4000 meters grew to a height of 3.5 meters above the level of the surrounding aquifer during a simulation period of one year. The simulation of the mound in the idealized aquifer was carried out by setting I = + 0.07 meters per month at the central node, and assuming a zero value for I at all other nodes. The results are shown graphically by Figure 12 and demonstrate once again that the assumptions of K = 200 meters per month and S = 0.1 are reasonable. The choice of I in this case was based on the fact that approximately 80 percent of the available annual rainfall reached the groundwater table at this point.

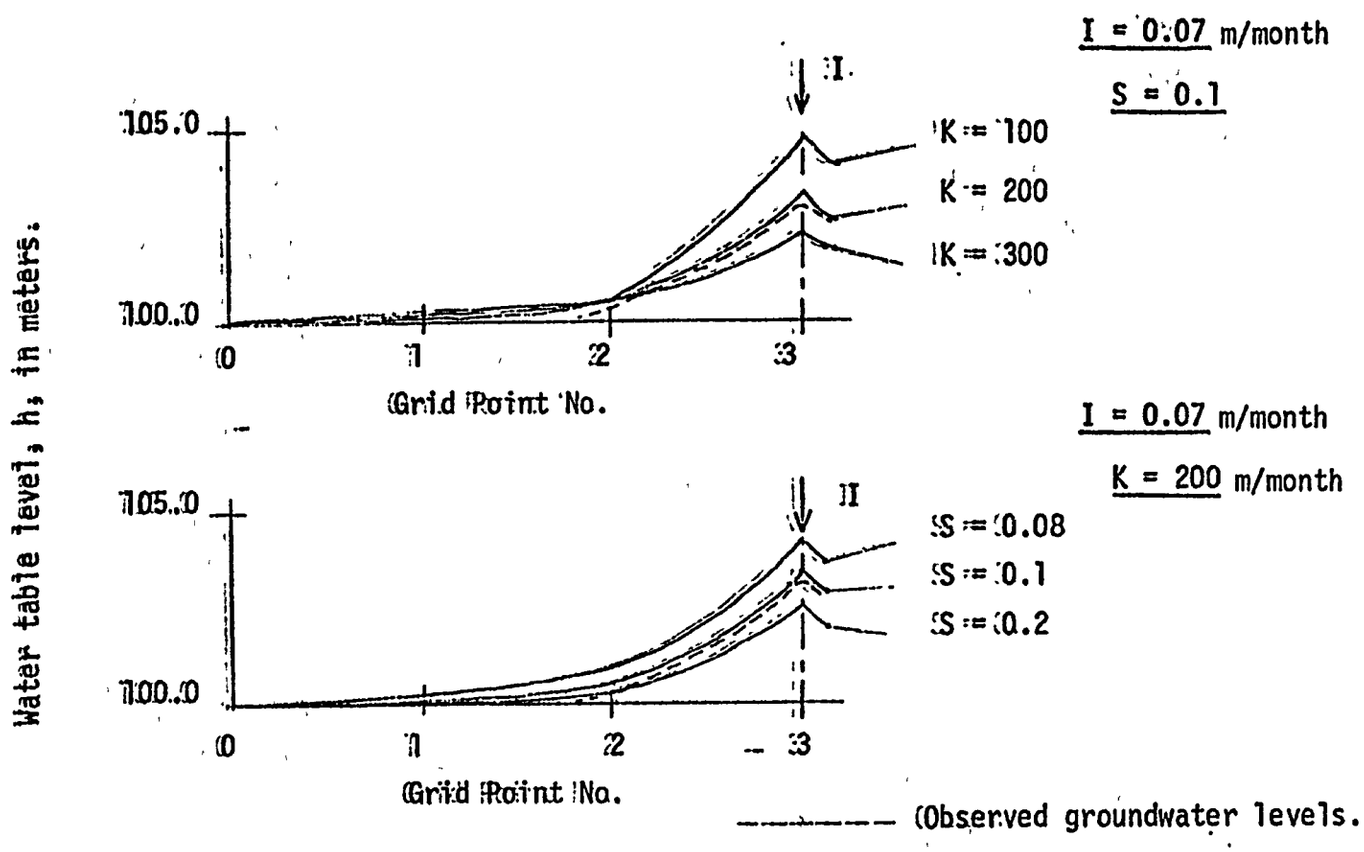

Figure 12. Effect of varying K and S for an input to groundwater of + 0.07 m/month at central node only.

The values of K = 200 meters per month and S = 0.1 were further tested by a simulation study of the entire aquifer for the year 1969. Groundwater records were available for this period. A comparison between observed water table levels and those simulated under conditions of native

vegetation are shown in Table 2 and Figure 13. Close agreement was achieved between recorded and simulated water table levels and the model was, therefore, considered to be verified at this stage of study.

Management Studies

The verified model was used to provide estimates of the attenuation rates and equilibrium levels of the water table under various cropping and irrigation practices. Table 3 presents an assumed crop pattern, weighted crop coefficients, and assumed irrigation rates for the various soil groups within the study area. Agricultural crop distribution within the area was thus based on the soil group occurring at each grid point shown by Figure 1. Native vegetation density was taken as being that proportion of the total area occupied by native vegetation. For example, under a density of native vegetation equal to 0.2 one fifth of the total area represented by each grid point (four square kilometers) was assumed to be occupied by native vegetation. The remainder of the area represented by a particular grid point was assumed to be occupied by the distribution of agricultural crops corresponding to the soil type at that grid point (Table 3). Thus, on the basis of soil type, combinations of native vegetation and cultivated crop cover were developed for the entire area.

Computed equilibrium water table elevations in meters at each grid point under four conditions of vegetative cover and irrigation are shown by Table 2. Corresponding water table profiles for Sections A-C and B-C (see the sketch accompanying Table 2) are shown by Figure 13.

Table 2. Groundwater levels for December 1969.

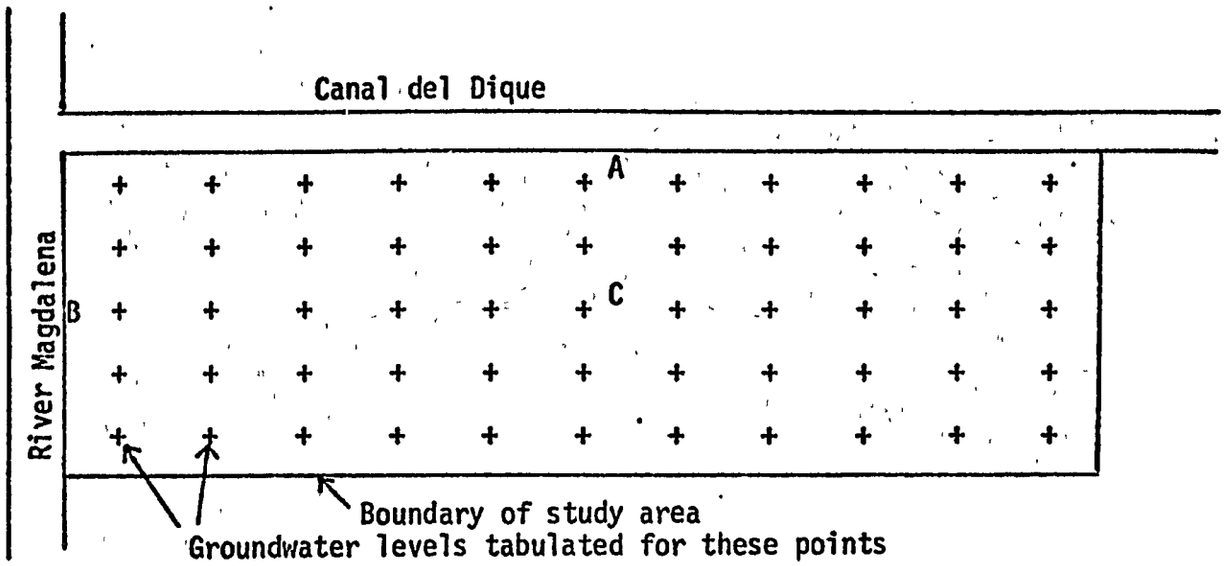

Sketch showing grid point locations within the study area.

Observed

97.6	101.4	101.5	101.7	100.5	99.7	96.3	101.1	96.2	96.0	96.2
99.5	97.5	97.3	98.9	95.9	97.9	95.7	99.7	97.3	97.0	98.0
100.6	95.8	96.1	96.2	97.3	94.6	97.6	98.3	95.6	96.5	97.4
100.5	99.5	96.2	95.9	95.6	95.3	95.7	97.1	97.0	96.4	97.2
100.5	99.5	99.1	96.8	96.5	95.7	96.8	98.0	96.7	97.0	97.0

Simulated - Native vegetation DDP = 0.25 K = 200 m/month S = 0.1

100.0	99.8	100.1	100.3	99.7	99.3	98.9	99.0	98.8	98.4	98.6
100.2	98.5	98.1	99.0	97.6	97.1	96.8	97.2	97.0	96.9	97.6
100.9	98.4	96.8	96.5	96.1	95.9	95.9	96.3	96.2	96.3	96.9
101.4	98.8	96.6	95.9	95.5	95.4	95.6	96.0	96.3	96.7	97.5
101.9	99.2	97.1	96.1	95.4	95.6	96.2	97.0	97.5	98.9	99.4

Simulated - Partly cultivated and irrigated DDP = 0.2 K = 200 m/month S = 0.1

99.9	99.7	99.9	100.0	99.5	99.1	98.8	98.9	98.6	98.2	98.5
100.2	98.3	97.7	97.5	97.1	96.7	96.6	97.1	96.8	96.7	97.5
100.7	98.3	96.7	96.0	95.7	95.4	95.4	96.0	95.8	96.1	96.7
101.3	98.6	96.5	95.7	95.0	94.8	95.1	95.7	95.8	96.3	97.2
101.9	99.1	96.8	95.9	95.0	95.2	95.9	97.6	97.2	98.5	99.1

Simulated - Partly cultivated and irrigated DDP = 0.1 K = 200 m/month S = 0.1

100.6	100.5	100.3	100.3	100.4	100.1	99.8	99.8	99.5	98.6	99.1
100.6	99.2	98.6	98.5	98.3	98.0	97.8	97.6	97.8	97.6	97.9
101.5	98.8	97.1	97.0	97.0	96.7	96.6	96.6	96.8	96.6	97.5
102.1	99.4	96.9	96.1	96.2	96.1	96.3	96.7	96.9	96.9	98.1
102.1	99.3	97.5	96.2	95.9	96.2	96.8	97.5	98.0	99.3	99.9

Simulated - Partly cultivated and irrigated DDP = 0.0 K = 200 m/month S = 0.1

101.3	101.3	100.6	100.7	101.3	101.2	100.8	100.7	100.4	99.0	99.7
101.0	100.8	99.6	99.6	99.6	99.3	98.9	98.2	98.9	98.5	98.3
102.3	99.3	97.5	98.0	98.3	98.0	97.8	97.2	97.8	97.1	98.4
102.9	100.3	97.2	96.5	97.3	97.4	97.5	97.8	98.0	97.4	99.0
102.2	99.6	98.1	96.6	96.8	97.8	97.8	98.5	99.0	100.2	100.7

DDP = native vegetation density. For uncultivated areas DDP = 0.25

Table 3. Crop-pattern, crop-coefficients, and irrigation for different soils.

Soil[1] Group	Item	Crop	Crop-pattern, weighted crop-coefficient, and irrigation rate											
			Jan.	Feb.	Mar.	Apr.	May	Jun.	Jul.	Aug.	Sept.	Oct.	Nov.	Dec.
1,2,3	Crop pattern	Citrus Peanuts Maize												
	Crop coeff.		.65	.75	.55	.60	.45	.60	.75	.60	.60	.60	.60	.50
	Irr. rate[2]		100	100	100	50	50	50	50	50	50	50	50	100
4	Crop pattern	Cotton Sorghum												
	Crop coeff.		.70	.50	.20	.20	.30	.60	.90	.60	.40	.65	.90	.90
	Irr. rate[2]		100	100	0	0	50	50	50	50	50	50	50	100
5,6	Crop pattern	Grasses												
	Crop coeff.		.80	.80	.80	.80	.80	.80	.80	.80	.80	.80	.80	.80
	Irr. rate[2]		100	100	100	50	50	50	50	50	50	50	50	100
7,8	Crop coeff.	Bare Soil	.10	.10	.10	.10	.10	.10	.10	.10	.10	.10	.10	.10
	Irr. rate[2]		0	0	0	0	0	0	0	0	0	0	0	0

[1]See Appendix 1.

[2]In mm/month.

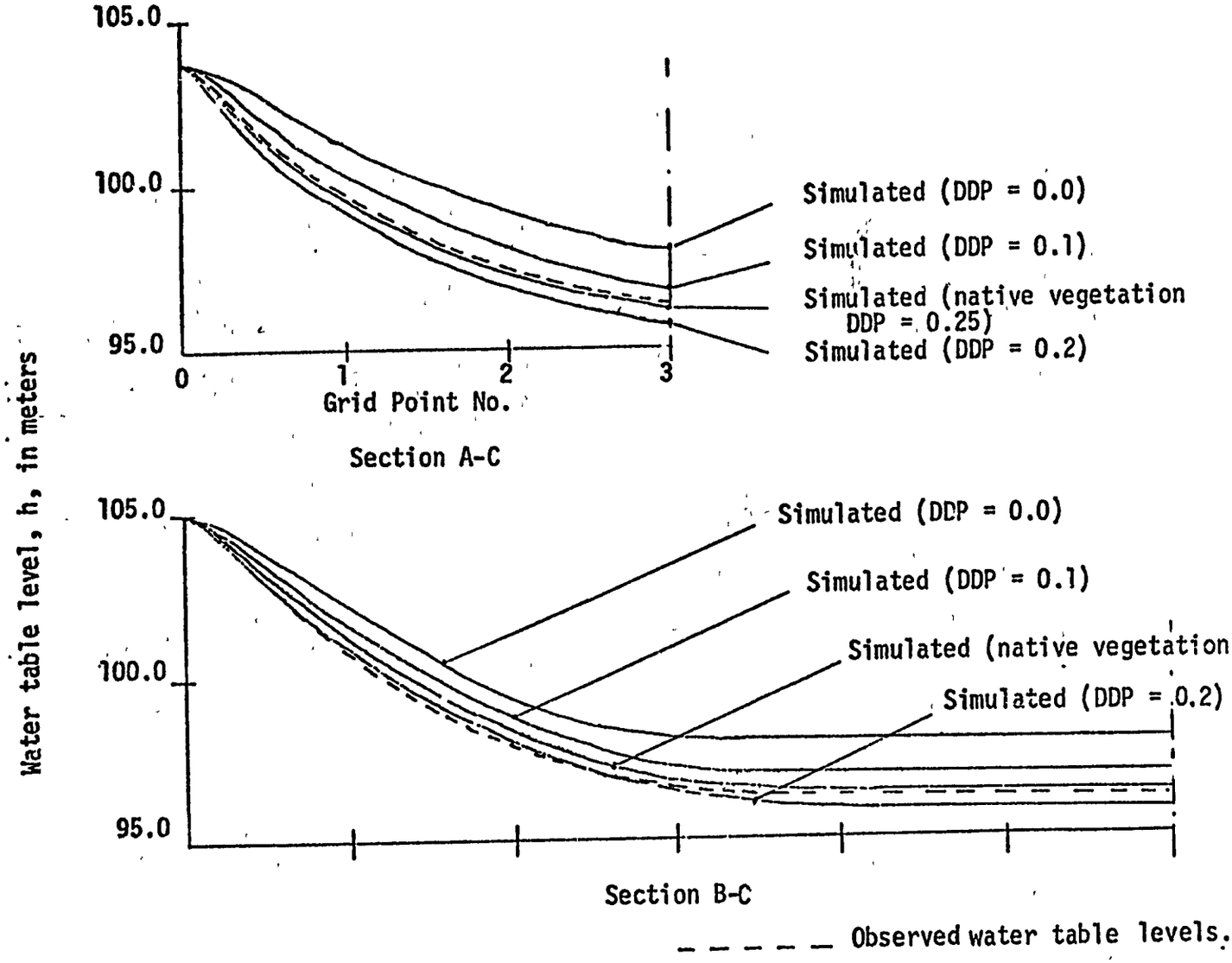

Fig. 13. Observed and simulated water table levels for December 1969.

Discussions and Conclusions

The work reported herein has demonstrated the utility of the hybrid computer for detailed simulation of highly complex and dynamic water resource systems. The hybrid, which combines the advantage of both the analog and digital computers, is particularly applicable to problems involving differential equations, and where interpretation of results and problem insight are facilitated by the "man in the loop" configuration and graphical display of output. In addition, for the type of iterative routines that are characteristic of simulation problems the hybrid computer shows considerable economies over the all digital approach (Chubb, 1970).

In this study sensitivity analyses with the simulation model provided considerable insight into the functioning of the prototype system. In addition, the model yielded useful estimates of the effects of various management alternatives on water table levels within the study area.

Further work is now in progress to develop a refined model of the unsaturated portion of the aquifer, to include variable permeability at each node, and to generalize the digital program so that a prototype boundary of any shape may be specified. Eventually the model will be expanded to include the economic dimensions, so that optimal solutions may be found in terms of particular economic objective functions. Even at the present exploratory stage the model has proved useful in determining the type and accuracy of data required to define the system, and in establishing guide lines for future development.

LITERATURE CITED

Christiansen, J. E., and G. H. Hargreaves. 1969. Irrigation requirements from evaporation. Paper presented at International Commission on Irrigation and Drainage, Seventh Congress, Mexico City, April, pp. 23.570-23.596.

Thornthwaite, C. W., and J. R. Mather. 1955. The water budget and its use in irrigation. In Water, U.S. Dep. Agr. Yearbook, pp. 346-357.

Hsu, Stephen K. T., and Robert M. Howe. 1968. Preliminary investigation of a hybrid method for solving partial differential equations. Proceedings, Fall Joint Computer Conference, Vol. 33, Part 1, pp. 601-609.

Chubb, Bruce A. Economic evaluation of the CSMP digital simulation language. Simulation, Technical Journal of Simulation Councils, Inc., 14(3):101-103. 1970.

APPENDIX 1

Soil Groups of Atlantico 3 Area, Colombia

Group I	-	Alluvial soils of sandy texture; light subsoil.
Group II	-	Alluvial soils of medium texture with saline (sometimes alkaline) spots; loamy or sandy subsoil.
Group III	-	Alluvial soils of heavy texture, with saline (sometimes alkaline) spots; medium to light subsoil.
Group IV	-	Heavy textured soils; hydromorphic gleyc grumo-soles with saline and alkaline spots; light to medium subsoil.
Group V	-	Deep saline-alkaline soils, acid in the upper horizon (strongly solodized solonetz and soloth); medium to heavy subsoil.
Group VI	-	Moderately deep saline-alkaline soils acidified on the surface (solodized solonetz); generally heavy subsoil with sand pockets.
Group VII	-	Saline and saline-alkaline soils at the surface (shallow solontchak and solonetz-solontchak); medium and heavy subsoil.
Group VIII	-	Medium and heavy alluvial soils and hydromorphic soils, in complex with saline and saline-alkaline soils at the surface (complex of soil groups II, III and VII).