AGENCY FOR INTERNATIONAL DEVELOPMENT
WASHINGTON, D. C. 20523

BIBLIOGRAPHIC INPUT SHEET

FOR AID USE ONLY
0077

1. SUBJECT CLASSIFICATION

A. PRIMARY
Agriculture — AF10-0000-G690

B. SECONDARY
Meteorology and climatology--Iran

2. TITLE AND SUBTITLE
Pan evaporation and evapotranspiration in Iran

3. AUTHOR(S)
Khosravi,A.R.

4. DOCUMENT DATE	5. NUMBER OF PAGES	6. ARC NUMBER
1972	104p.	ARC

7. REFERENCE ORGANIZATION NAME AND ADDRESS
Utah State

8. SUPPLEMENTARY NOTES *(Sponsoring Organization, Publishers, Availability)*
(Thesis M.S.--Utah State)

9. ABSTRACT

10. CONTROL NUMBER	11. PRICE OF DOCUMENT
PN-RAA-026	
12. DESCRIPTORS	**13. PROJECT NUMBER**
Evaporation Evapotranspiration Iran	**14. CONTRACT NUMBER** CSD-2167 Res.
	15. TYPE OF DOCUMENT

AID 590-1 (4-74)

PAN EVAPORATION AND EVAPOTRANSPIRATION IN IRAN

by

Abdol Reza Khosravi

A thesis submitted in partial fulfillment
of the requirements for the degree

of

MASTER OF SCIENCE

in

Agricultural and Irrigation Engineering

Approved:

Major Professor

Committee Member

Committee Member

Dean of Graduate Studies

UTAH STATE UNIVERSITY
Logan, Utah

1972

ACKNOWLEDGMENTS

I happily acknowledge my debt to the people who have aided me in the preparation of this thesis.

Foremost among them is Professor Emeritus Jerald E. Christiansen. As my major professor and thesis director I have had the advantage of his wide experience and great knowledge in the field of evapotranspiration.

I also express my thanks to committee members Professor R. J. Hanks and Professor Cleve Milligan for their helpful advice and assistance.

I am deeply grateful to Engineer Firooz Mahdavi, General Director of the Soil Institute of Iran, for his agreement to the terms of the fellowship offered to me by the Food and Agricultural Organization of the United Nations, and also to Dr. M. L. Dewan, United Nations Development Projects, Manager in the Soil Institute of Iran.

Sincere thanks to Engineer Manoochehr Hekmat, Director of the Soil Institute of Fars Province, and other colleagues who helped in developing the "Marvdasht Pilot Project" where the evapotranspiration experiments were carried out and most of the data for this thesis were collected.

Grateful acknowledgment is also due to Mr. K. Pohjakas, my FAO counterpart, for his work in the field of soil and water management during his four years of assignment in Iran.

Last but not least I wish to express my gratitude to Mr. P. J. Slabbers for his pioneer work using Iranian climatic data to compute evapotranspiration with computer programs.

I am also grateful to the FAO of the United Nations for the fellowship they granted me to study irrigation at Utah State University and for providing computer time so I could make the necessary computations from the Iranian data for this thesis.

Abdol Reza Khosravi

Abdol Reza Khosravi

TABLE OF CONTENTS

	Page
INTRODUCTION	1
General	1
Objectives	2
GENERAL DESCRIPTION OF IRAN	3
Location	3
Physiographic Areas	3
Climate	5
B Climates	5
C Climates	6
D Climates	7
E Climates	7
Rainfall	7
Water Resources	9
Agriculture	18
DEFINITION OF TERMS	20
Evaporation	20
Transpiration	20
Evapotranspiration	22
Consumptive Use	22
Consumptive Water Requirement	23
Peak Period Consumptive Use	23
Duty of Water	23
Irrigation Requirement	23
Dependable Precipitation	23
Effective Rainfall	23
Irrigation Efficiency	24
Net Irrigation Requirement	24
Irrigation Water Requirement	24
Adequacy Percentage	24
Moisture Availability Ratio	24
Moisture Deficit	25
Stream-Flow Depletion	25
Field Capacity	25
Permanent Wilting Point	25

Page

Carryover Soil Moisture 25
Rain 25
Snow 26
Dew 26
Freeze 26
Frost 26

FACTORS AFFECTING EVAPOTRANSPIRATION 27

Climatic Factors 27

Temperature 27
Humidity 27
Wind Speed 27
Radiation 28
Sunshine Percentage 29
Precipitation 30
Advection 30

Soil Factors 30

Moisture Distribution and Site of Evaporation 30
Soil Mulches and Crop Residues 31
Depth of the Water Table 31

Plant Factors 31

Stage of Plant Growth 31
Length of Growing Season 32

ESTIMATION OF EVAPOTRANSPIRATION 33

History 33
Direct Methods of Determining Evapotranspiration . . . 36

Soil Moisture Depletion 36
Field Plot Studies 36
Lysimeters 37
Inflow-Outflow 37
Integration 38
Groundwater Fluctuations 38
Measuring Matric Potential 39

Page

Micrometeorological Methods of Determining Evapotranspiration 39
Aerodynamic Equations 39

Fluctuation Theory 40
Turbulent Transport Equations 41
Dalton's Formula 42
Thornthwaite and Holzman Equation 42

Energy Budget Method 44
Combination Equation 46

Bowen Ratio 46
Penman's Method 47

Empirical Equations 49

Thornthwaite 50
Hamon 50
Turc 51
Jensen-Haise 51
Makkink 52
Blaney-Morin 52
Blaney-Criddle 53
Papadakis 53

FORMULAS DEVELOPED BY CHRISTIANSEN AND ASSOCIATES AT UTAH STATE UNIVERSITY 56

Christiansen 57

Christiansen's Pan Evaporation Formula 58

Christiansen's Formulas for Potential Evapotranspiration . 62

Using Measured Pan Evaporation as a Base 62
Using Extraterrestrial Radiation as a Base 64
Using Measured Incoming Radiation as a Base 64

Hargreaves 67

PROCEDURE 70

Data Collection 70
Measured Class A Pan Evaporation 72

Page

Estimating Additional Data 72

Theoretical Radiation, RMD 72
Theoretical Radiation, RMM 74

Modification of Christiansen's Formula 74
Comparison of Evaporation Formulas 77

Procedures Used by Slabbers. 77

Computing Crop Factors 84
Comparison of Etp Formulas 88

RESULTS AND DISCUSSION. 93

Evaporation Formula 93
Comparison of Evaporation Formulas 94
Comparison of Evapotranspiration Formulas 94
Determination of Actual Evapotranspiration 99

SUMMARY AND CONCLUSIONS 103

BIBLIOGRAPHY 105

APPENDICES 109

APPENDIX A - Symbols Used in Computer Programs. . . 110
APPENDIX B - Computer Programs 1 through 9 113
APPENDIX C - Tables 28.1 - 28.6 134
Tables 29.1 - 29.5 141
Tables 30.1 - 30.24 146
APPENDIX D - Procedure for Finding the Coefficients of A Parabolic Equation 170
APPENDIX E - Table 31 172

VITA 174

LIST OF TABLES

Table		Page
1	Distribution of Rainfall in Iran	7
2	Pumps Used for Irrigation in Iran	11
3	Power Used for Irrigation Pumping in Iran	12
4	Name, Place and Construction Cost of the Reservoir Dams in Iran	13
5	Technical Details and Specifications of the Dams	15
6	Estimated Increase in Area of Arable Land Ready for Cultivation, and Land Which Will Receive Improved Irrigation in the Course of Fourth Plan (in 1000 hectares)	17
7	Area Under Cultivation at End of Third Plan and Increase During Fourth Plan by Various Agricultural Products	19
8	Monthly Percentage of Daytime Hours of the Year for Latitudes 24° to 50° North of the Equator	54
9	Mean Monthly Values of Extraterrestrial Radiation Expressed as Equivalent Evaporation in Millimeters per Month at 20°C	59
10	Mean Monthly Values of Extraterrestrial Radiation Expressed as equivalent Evaporation in Inches Per Month, for Use with Equation [37]	60
11	Coefficients for Temperature, Wind, Humidity and Sunshine, for Use with Equation [37]	63
12	Coefficients for Temperature, Wind, Humidity and Sunshine, for Use with Equation [38]	65
13	Coefficients for Temperature, Wind, Humidity and Sunshine, for Use with Equations [39] and [40]	66

Table		Page
14	Evapotranspiration Values Measured by Lysimeter and Field Plot Studies at Marvdasht Pilot Project	73
15	Computer Programs Used in the Study and Given in Appendix B	76
16	Stations Used for Developing an Evaporation Formula for Iran	78
17	Description of Station Codes	78
18	Computation of Blaney-Criddle K Values	79
19	Values of g(l) in Relation to Crop Length and Values of h(U) in Relation to Wind Speed at Two Meter Height	82
20	Mean Monthly Values of ETPP and ETBC	89
21	Stations Used for Comparison of Etp Formulas . .	90
22	Comparison of Mean Monthly Measured Pan Evaporation and that Computed by Five Formulas (5 Stations)	95
23	Comparison of Evapotranspiration Formulas for Iran	97
24	Comparison of Evapotranspiration Formulas for Iran - Overall Averages for 24 Stations in Iran .	98
25	Comparison of Measured Evapotranspiration to Measured Pan Evaporation	100
26	Comparison of Measured Evapotranspiration to Computed Potential Evapotranspiration	101
27	Computer Symbols Used in all of the Computer Programs	111
28.1 to 28.6	Comparison of Measured and Computed Pan Evaporation for Iran	135

Table		Page
29.1 to 29.5	Comparison of Measured and Computed Pan Evaporation for Iran	141
30.1 to 30.24	Comparison of Evapotranspiration Formulas for Iran	146
31	Coefficients for Computing Pan Evaporation and Potential Evapotranspiration from Khosravi's Formulas for Iran	173

LIST OF FIGURES

Figure		Page
1	Map Showing the Main Physiographic Features of Iran	4
2	Map Showing Different Climatic Regions in Iran	8
3	Map Showing the Distribution of the Average Annual Precipitation in Iran	10
4	Standard United States Environmental Science Services (U.S. Weather Bureau) Class A Evaporation Pan	21
5	Relation Between Hours of Sunshine and Degree of Cloudiness in Iran	71
6	Relation Between Crop Length and Roughness Function	83
7	Oil Drum Type Lysimeter Used at Marvdasht Pilot Project	85
8	Lysimeter Used for Row Crops at Marvdasht Pilot Project	86
9	Map Showing the Geographical Location and Code Number of Weather Stations	91

ABSTRACT

Pan Evaporation and Evapotranspiration in Iran

by

Abdol Reza Khosravi, Master of Science

Utah State University, 1972

Major Professor: Jerald E. Christiansen
Department: Agricultural and Irrigation Engineering

Monthly climatological data, including Class A pan evaporation, for 6 stations in Iran, with a total of 132 months of data, was analyzed to develop a formula for estimating pan evaporation where evaporation measurements are not made.

Using computed pan evaporation and coefficients previously prepared by Christiansen, a formula was developed to estimate potential evaporation. This formula was used to compute potential evapotranspiration for 24 stations in Iran with 2615 months of climatic data. These values were then compared with values computed by four other formulas.

Measured evapotranspiration of one station in Iran with two years of data for seven crops was compared with measured pan evaporation and computed evapotranspiration.

(174 pages)

INTRODUCTION

General

Irrigation is an old art practiced in the world probably since 5,000 years ago. There are striking examples in many countries of some ancient irrigation works still in operation and some that have been improved with advance in knowledge and new techniques. On the other hand, some of these newer systems have failed because of inadequate investigations prior to development and poor design.

With a consistent increase in population in most of the countries, the need for more food and fiber is evident. Savings in the use of irrigation water is of less importance where water is plentiful, but in most of the arid and semi-arid parts of the world water is a limiting factor in crop production. Conservation methods must be practiced to obtain the maximum production from each unit of water.

To optimize production one should know how much water to apply, when to apply it, where to apply it, and how to design and manage the irrigation systems. To do this, it is essential that the water requirements and consumptive use of water be known. These data are necessary in planning farm irrigation systems, and they are used by the government and the agencies responsible for the planning, construction, operation and maintenance of irrigation projects.

Many irrigation projects have been developed recently in Iran, and other projects are already underway. These projects will supply irrigation

water not only to the existing 699,000 hectares, but they will bring 618,000 hectares of new lands under production. Experience has shown that to have a successful farming operation in an irrigated region, the introduction of modern methods of irrigation is essential. These methods include furrow, borderstrip and sprinkling. A knowledge of consumptive use of water is also very important.

The results of this study should be useful to those involved in Iranian irrigation work.

Objectives

The primary objectives of this thesis are to:

1. Develop a modified Christiansen-type formula for Class A pan evaporation that best fits the Iranian data.

2. Compare this formula with the already computed values from the Penman and Blaney-Criddle formulas.

3. Develop a formula for potential evapotranspiration using available lysimeter and other data.

4. Compare this formula with other formulas for estimating potential evapotranspiration.

5. Use data from lysimeters and other sources to estimate crop coefficients which can be applied to potential evapotranspiration and/or pan evaporation to obtain an estimate of actual evapotranspiration for several crops.

GENERAL DESCRIPTION OF IRAN

Location

Iran is situated in the north temperate zone, north of the Persian Gulf, south of the Soviet Union, west of Afghanistan and Pakistan, and east of Iraq and Turkey. It lies between 44 and 63 degrees longitude and 25 and 40 degrees latitude. It covers an area of about 1,648,000 square kilometers (165 million hectares), of which about 1,000,000 hectares are lakes and other water bodies (12,23).

Physiographic Areas

There are four main physiographic areas in Iran:

1. The Caspian Coast, which is below sea level, forms a separate climatic zone, being more humid than other regions.

2. The Zagros Range stretches from northwest to southeast, and the Alborz Range runs across the north and borders the south coast of the Caspian Sea.

3. The area between the Alborz and Zagros Ranges begins as a high plateau with its own secondary ranges and gradually descends into deserts (Dasht-E-Kavir and Dasht-E-Lut (23).

4. The Khuzistan, a low-lying plain, is a continuation of the Mesopotamian Plain of Iraq.

The main physiographic features of Iran are shown in Figure 1.

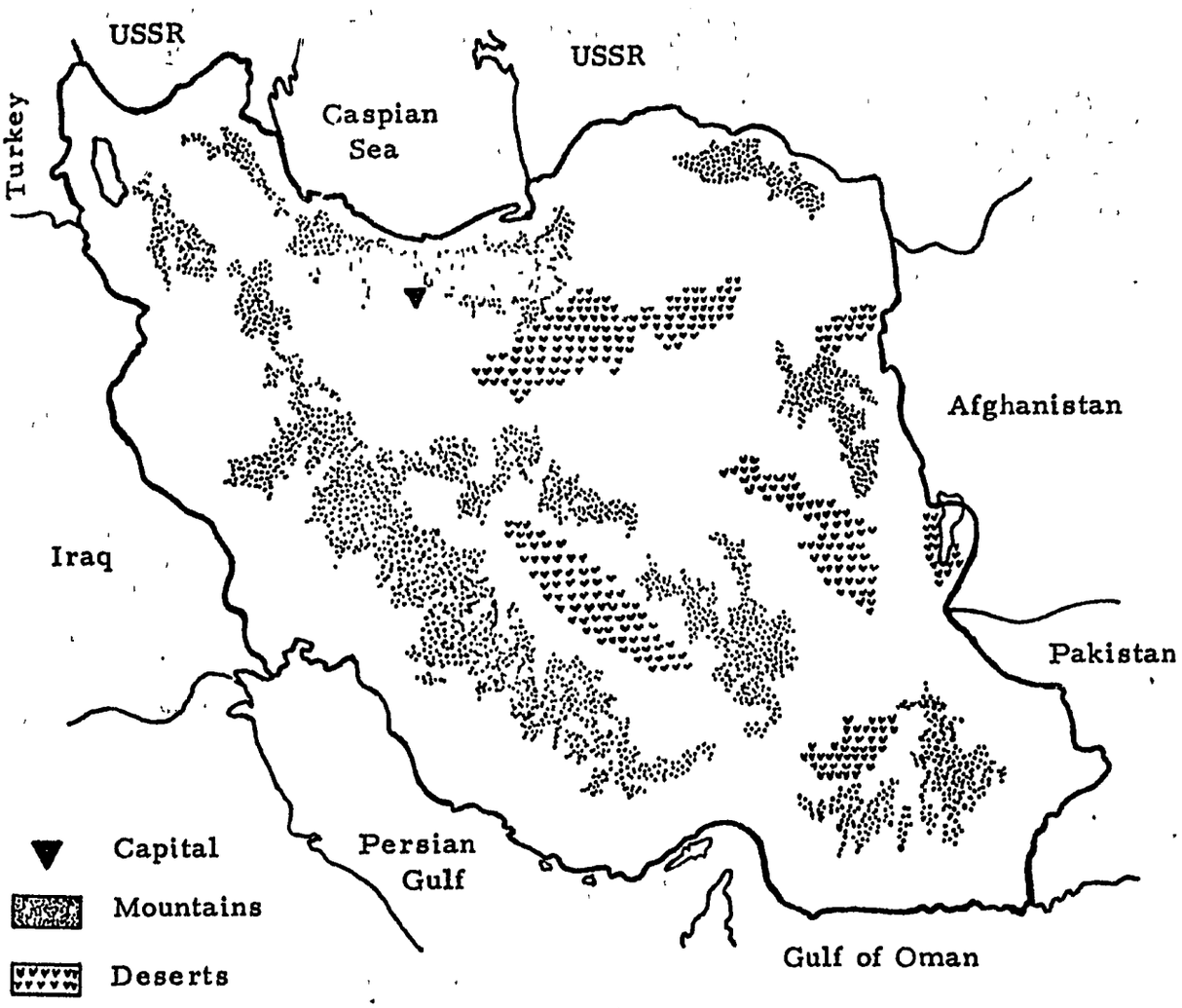

Figure 1. Map Showing the Main Physiographic Features of Iran

Generally Iran is a mountainous country with an average altitude of about 1,000 meters (3,000 feet). The highest peak, called Mount Demavand, is 5,654 meters (about 18,600 feet).

The major part of the country which includes the two deserts is arid and semi-arid. These deserts comprise roughly one-third of the total area of Iran.

The relief map of Iran indicates that:

Elevation Above Sea Level	Area, %
1,000 - 2,000 meters	53.3
500 - 1,000	9.3
0 - 500	20.1
Greater than 2,000	15.7
0 - 28 meters below sea level	0.7
Lakes	0.9

Climate

Because climate is one of the most important factors affecting evapotranspiration, it is essential in this thesis to review the different types of climate that prevail in Iran as it has been classified by Dr. Ganji (15), based on Koeppen's system (15).

B Climates. A dry climate in which evaporation exceeds precipitation. This type inclues two-thirds of the climatic condition of the country and is subdivided as follows:

BW. Along the southern coastal and interior regions this type of climate is called the "desert type" and is characterized by scanty rainfall and high temperatures with high humidity along the coast.

BS. Generally this type of climate, known as semi-arid steppe, is often a transition between the arid deserts and humid climates. The BS type of climate covers about 500,000 square kilometers, or 30 percent of Iran's area. It lies between 1,000 to 1,500 meters elevation above sea level. This zone covers most of the mountain foothills except those in Khuzistan. The maximum rainfall in this zone occurs during the cool months and therefore contributes to the groundwater supply. The highest rainfall in this type of climate is about 300 millimeters (mm).

C Climates. The most populous part of Iran is located in this climatic zone. It covers one-fourth of the total land area of Iran and belongs to the Mesothermal Group of climates. It is divided into the two following groups:

C_c. The Caspian type climate is characterized by moderate temperatures, very high humidity, high precipitation (1,000 - 2,000 mm), high local winds, and strong land and sea breezes. This type of climate is found on the coast of the Caspian Sea, and the northern slopes of the mountains facing the sea. Subtropical forests grow in this area up to 2,500-meter elevations.

C_s. The highland type climate is a Mediterranean type except that the warm winters are not found in the Iranian highlands. These highlands

are very cold, especially in Azarbaijan and Khorasan provinces. The C_s climate in the Fars province, however, is more similar to that of Mediterranean countries.

D Climates. Forty thousand square kilometers of Iranian land are included in the D type climate zone. The warmest temperatures are above 10°C, and the lowest temperatures are sometimes below 3°C.

E Climates. The E type climate belongs to higher elevations (above 3,000 meters). This zone includes the volcanic peaks of Demavand and Sabalan where the temperatures drop below 10°C even during the warmest months. The highest peaks are permanently covered with snow (12). Figure 2 shows different climatic regions in Iran.

Rainfall

Winter is the rainy season in Iran. Generally, the annual rainfall is low except along the Caspian Sea. The average annual precipitation in Iran is estimated at about 240 mm. Table 1 shows the distribution of this rainfall (39).

Table 1. Distribution of Rainfall in Iran

Annual Rainfall (mm)	Recipient Area (Millions of Hectares)	Percent of Total Area
Less than 100	22	13
100 - 250	100	61
250 - 500	28	17
500 - 1000	13	8
Greater than 1000	1	1
TOTAL	165	100

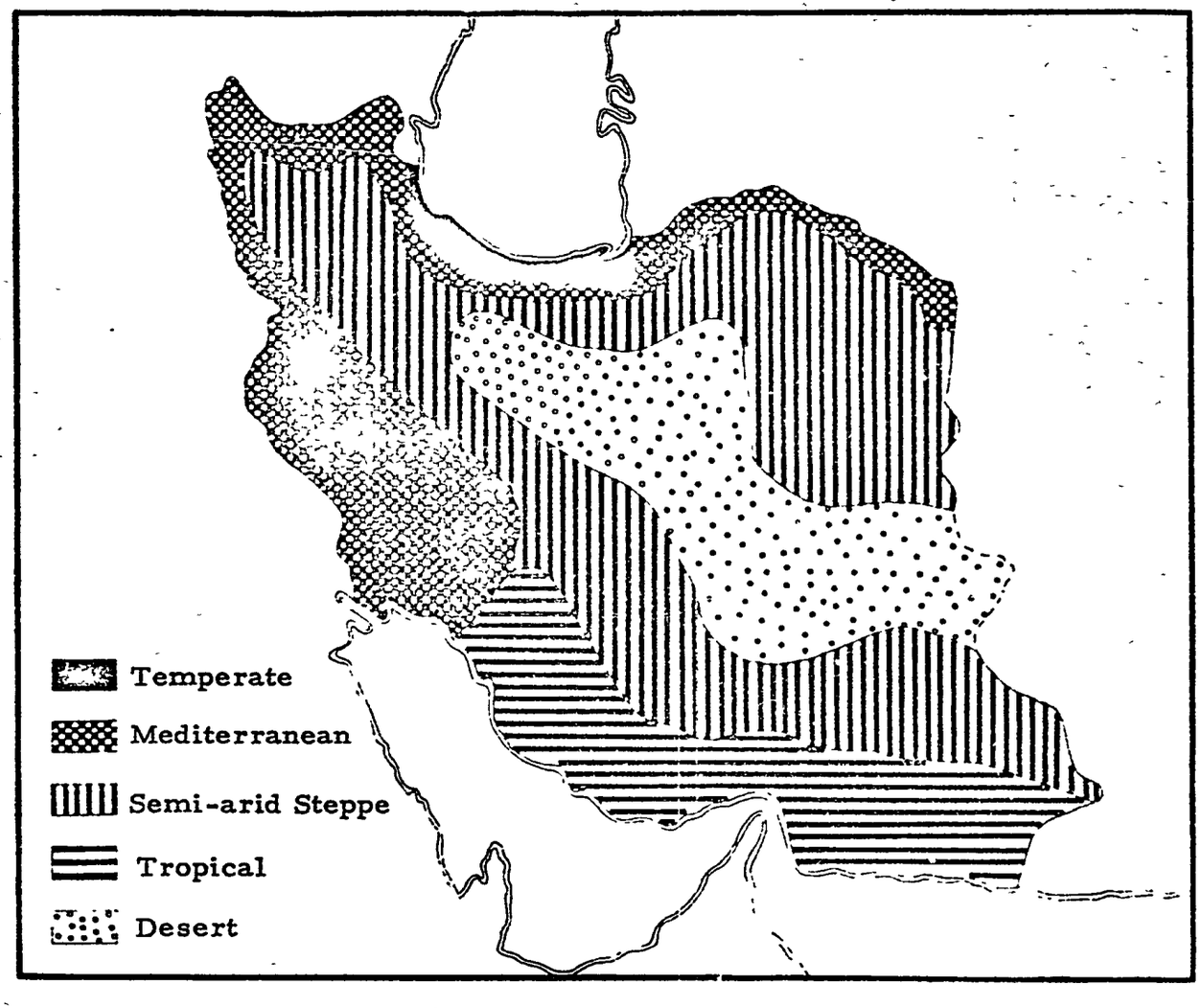

Figure 2. Map Showing Different Climatic Regions in Iran

In Iran the rainfall generally decreases with latitude, whereas the temperatures increase. The southeastern region receives the smallest amount of rainfall, and it occurs during the coldest month of the year. The Caspian region has the highest precipitation, generally more than 1,000 mm. Practically all of the winter precipitation in Iran is produced by the Mediterranean barometric depressions which move across the country throughout the winter months at almost regular intervals. During their passage, these depressions produce rain at low altitudes and snow at high elevations.

In the spring scattered convection showers are produced by the rapid heating of the moist lands and snow-covered areas, especially in the mountainous areas of the northwestern and western provinces.

In the summer, except on the Caspian shores, the country is dry. In the fall the rainfall may start by mid-autumn (23). Figure 3 shows the distribution of the average annual precipitation in Iran.

Water Resources

The total amount of water received by Iran from different sources is estimated to be about 400 billion cubic meters annually. Evaporation directly, or indirectly, is responsible for the loss of 240 billion cubic meters. The surface flows in the form of perennial and seasonal rivers account for about 100 billion cubic meters. The remaining 60 billion cubic meters infiltrates into the ground, out of which only 3 billion cubic meters (5 percent) are utilized.

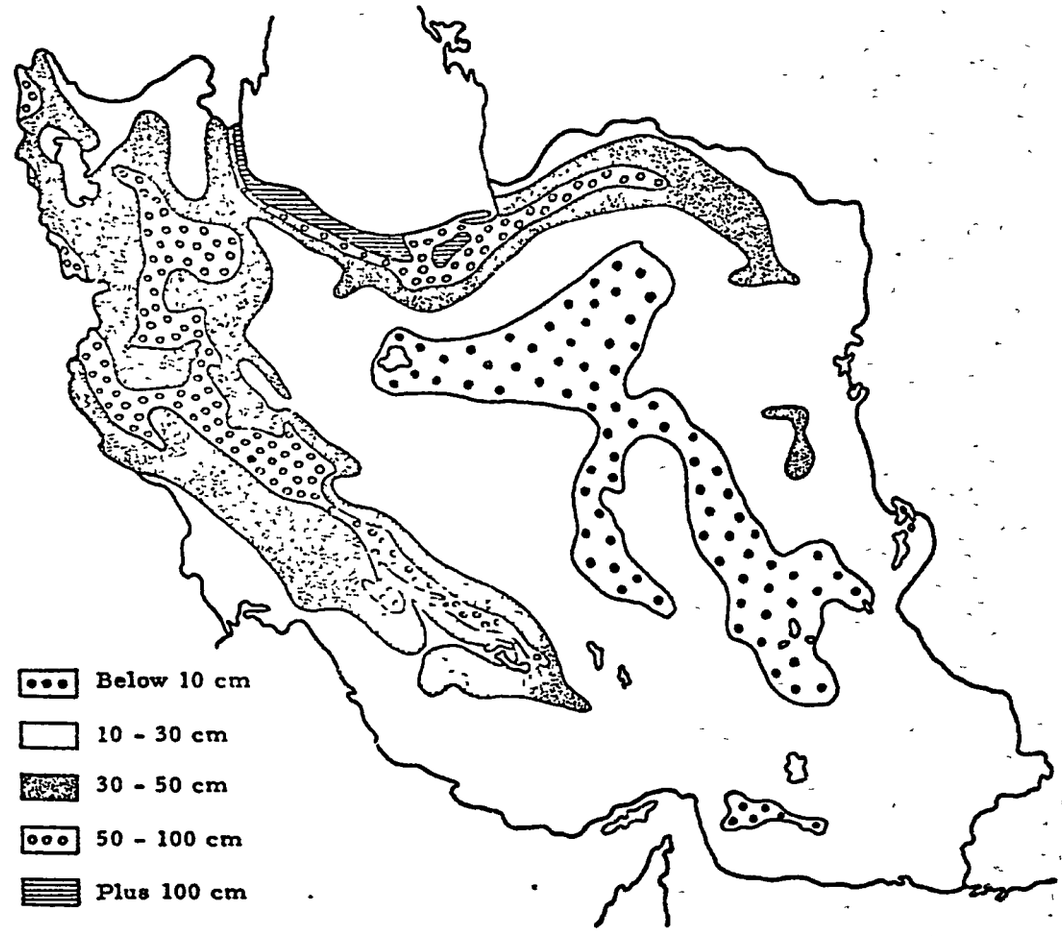

Figure 3. Map Showing the Distribution of the Average Annual Precipitation in Iran

The total water used for irrigation in Iran is estimated to be about 37 billion cubic meters. About one billion cubic meters annually are used for industrial and domestic purposes.

Of the 400 billion cubic meters of water that enter Iran annually from rivers or precipitation, only about 78 billion cubic meters (19 percent) are utilized. Assuming that the country's ground water resources remain constant, the remainder either evaporates or flows out of the country in the form of rivers (23).

Ghanats (underground water tunnels) are started at the surface and dug slightly upgrade toward the ground water supply. They are sometimes 20 to 30 miles in length (24) and have been the most important means of exploiting the underground water resources. The amount of water obtained from ghanats in the past decade has been estimated at about six billion cubic meters per year. Unfortunately, because of the lowering of the water table through the use of deep and shallow pump and poor maintenance, some of these ghanats have been abandoned in recent years. Table 2 gives the number of irrigation pumps in operation in Iran (23).

Table 2. Pumps Used for Irrigation in Iran

Deep Wells	7,382
Semi-deep Wells	19,993
Riverbank pumps	5,178
TOTAL	32,553

Table 3 indicates the amount of power used for pumping water.

Table 3. Power Used for Irrigation Pumping in Iran

By pumps on wells	399,466 KW
By pumps on riverbanks	73,721 KW
Total power used	473,187 KW

Data from the Plan Organization (agency responsible for development planning in Iran) shows that from 1965 to 1972 a total sum of 53,150 million rials has been allocated for the development of the water resources by the Iranian government. Many dams and irrigation projects have already been built, and some are now under construction.

Table 4 introduces the dams built in Iran and their cost and locations. The technical details and specification of these dams are shown in Table 5, and the estimated increase in area of arable land in the course of the Fourth Development Plan (1965 to 1972) is given in Table 6.

Since the average annual rainfall in Iran is about 300 mm, compared to the world's average of 860 mm, Iran is considered an arid or semi-arid country (23). Under the law, all waters in Iran are nationalized. This water law, which was passed on July 29, 1968, is an important step toward protecting and utilizing the water resources of

Table 4. Name, Place and Construction Cost of the Reservoir Dams in Iran[a]

Name of Dam	River	Province	Cost in millions of Rials	Remarks
I. Already Constructed				
Shah-Esma'il (Golpayegan)	Qum	Isfahan	160	
Amir-Kabir (Karaj)	Karaj	Central	4,800	
Shahbanu Farah (Sefid-Rud)	Sefidrud	Gilan	4,584	2/3 cost share in irrigation & 1/3 in electric power
Mohammad-Reza Shah (Dez)	Dez	Khuzistan	7,105	....ditto.....
Shahnaz	Qarachay	Hamadan	1,200	
Farahnaz	Jajrud	Central	4,000	
Shah Abbas Kabir	Zayanderud	Isfahan	3,000	2/3 cost share in irrigation
II. Under Construction or About to be Constructed				
Sangarsavar (Voshmguir)	Gorgan	Mazandaran	380	
Aras	Aras	W. Azerbaijan	2,900	
Dariush-Kabir (Dorudzan)	Kor	Fars	1,200	
Shapur-Awal (Mahabad)	Mahabad	W. Azerbaijan	1,050	
Kurosh-Kabir (Zarrinehrud)	Zarrinehrud	W. Azerbaijan	925	

[a]Source: Plan Organization Publications.

Table 4. (Continued)

Name of Dam	River	Province	Cost in millions of Rials	Remarks
III. Under Study				
Taleqan	Shahrud	Central	1,800	
Jiroft	Halilrud	Kerman	700	2/3 cost share in irrigation
Minab	Minab	Banader	3,000	
Reza-Shah Kabir	Karun	Khuzistan	7,200	Irrigation share has only been sanctioned
Nader-Shah (Karun)	Karun	Khuzistan	3,700	1/2 irrigation cost share

Table 5. Technical Details and Specifications of the Dams[a]

Name of Dam	Type of Dam	Height (Meters)	Capacity m Cubic Meters	Annual Vol. Arranged and Regulated (m Cubic Meters)	Area Which It Will Irrigate (1000 hectares)	Power Which It Will Generate (1000 kilowatts)
I. Already Built						
Shah-Esmail	Earth embankment	51	28	50	5	Nil
Amir-Kabir	Arch	185	205	400	21	75
Shahbanu Farah	Spanned-Gravity	106	1860	2000	238	87
Mohammad-Reza Shah	Arch-Gravity	203	3350	6000	125	520 (130 of that has been installed
Shahnaz	Spanned-Gravity	53	8	17	Hamadan Water	Nil
Farahnaz	Spanned-Gravity	104	95	245	30	22
Shah-Abbas	Arch	95	1450	1500	116	60
II. Under Construction or About to be Constructed						
Saugarsavar	Earth embankment	17	60	100	20	Nil
Aras	Earth embankment	38	1350	1400	82	21

[a]Source: Plan Organization Publications.

Table 5. (Continued)

Name of Dam	Type of Dam	Height (Meters)	Capacity M Cubic Meters	Annual Vol. Arranged and Regulated (M Cubic Meters)	Area Which It Will Irrigate (1000 hectares)	Power Which It Will Generate (1000 kilowatts)
II. Under Construction or About to be Constructed (Continued)						
Duriush-Kabir	Earth embankment	60	993	526	76	20
Shapur Awal	Earth embankment	48	250	190	20	5
Kurosh-Kabir	Earth embankment	50	610	530	95	10
III. Under Study						
Taleqan	Earth embankment	68	195	450	80	20
Jiroft	Arch	120	400	325	25	35
Minab	---	---	---	400	25	Nil
Reza-Shah Kabir	Earth embankment	80	9100	13400	160	700
Nader-Shah	Arch	190	200	950	40	100

Table 6. Estimated Increase in Area of Arable Land Ready for Cultivation, and Land Which Will Receive Improved Irrigation in the Course of Fourth Plan (in 1000 hectares)[a]

Title of Project	Increased Area of Arable Land	Improved Irrigation	Total
1. Irrigation network of Shahbanu Farah Dam (Sefid Rud)	96	20	116
2. Irrigation network of Mohammad Reza Shah Dam (Dez)	30	65	95
3. Irrigation network of Dariush-Kabir Dam (Dorudzan)	54	16	70
4. Irrigation network of Aras Dam	39	18	57
5. Irrigation network of Shah-Abbas Kabir Dam (Zayandeh Rud)	25	70	95
6. Irrigation network of Kurosh-Kabir Dam (Zarrineh Rud)	25	11	36
7. Irrigation network of Jiroft Dam	6	16	22
8. Irrigation network of Shahpur-Awal Dam (Mahabad)	10	6	16
9. Irrigation network of Woshmgir Dam (Sangarsavar)	10	10	20
10. Development of Qazvin Plain	--	44	44
11. Karun Irrigation network	24	6	30
12. Marun Irrigation network	6	56	62
13. Garmsar Irrigation network	--	20	20
14. Irrigation network of Farahnaz Dam (Latian)	--	30	30
15. Exploitation of Groundwater Resources	60	60	120
16. Other Irrigation Projects	15	52	67
TOTAL	400	500	900

[a]Source: (23)

the country in an efficient manner. The Ministry of Water and Power is responsible for the task of protecting, developing, and utilizing this national resource.

Agriculture

According to the 1966 census, 60 percent of the 25 million Iranians live in the villages and have farming occupations. The Industrial Revolution in Iran is responsible for many changes, but still, next to oil revenues, agricultural income is the highest in the country (26 percent of GNP). The soil continues to be the most exploitable asset. Out of the total land area of 165 million hectares in Iran, only 21 million hectares are estimated to be arable, and only one-third of this area, 7 million hectares, is under cultivation. The remaining 14 million hectares are fallow. Of the 7 million cultivated hectares, 40 percent is irrigated and 60 percent is dry farmed (23). Table 7 shows the various crops that are grown in Iran and their acreage.

Table 7. Area Under Cultivation at End of Third Plan and Increase During Fourth Plan by Various Agricultural Products[a]

Products	Area under cultivation at end of 3rd Plan (thousands of hectares)			Increase in area under cultivation during 4th Plan (thousands of hectares)			Area under cultivation at end of 4th Plan (thousands of hectares)		
	Irrigated	Dry Farming	Total	Irrigated	Dry Farming	Total	Irrigated	Dry Farming	Total
Wheat	1400	2600	4000	20	40	60	1420	2640	4060
Barley	330	870	1200	--	--	--	330	870	1200
Rice	355	--	355	25	--	25	380	--	380
Cereals	87	60	147	22	18	40	109	78	187
Sugar Beet	115	--	115	35	--	35	150	--	150
Cotton	200	155	355	20	20	40	229	175	395
Sugar cane	5	--	5	4	--	4	9	--	9
Tea	--	26	26	--	5	5	--	31	31
Oil seeds	25	--	25	70	--	70	95	--	95
Tobacco	10	10	20	--	--	--	10	10	20
Jute & fibrous plants	1	4	5	--	--	--	1	4	5
Fruit	280	80	360	20	--	20	300	80	380
Vegetables	110	90	200	15	10	25	125	100	225
Fodder crops	142	35	177	69	57	126	211	92	303
Other grains & crops	90	20	110	--	--	--	90	20	110
Total	3150	3950	7100	300	150	450	3450	4100	7550
Area ready for cultivation below dams				100		100	100		110
Grand Total	3150	3950	7100	400	150	550	3550	4100	7650

[a]Source: Plan Organization

DEFINITION OF TERMS

Evaporation. Evaporation is defined as a physical process by which liquid is changed to vapor. It is the first stage in the hydrologic cycle and occurs when the temperature of a water surface is higher than the dew point temperature of the air. It is commonly expressed in units of depth per unit of time (millimeters, or inches, per day or per month) (16).

As used in this thesis, pan evaporation means that which vaporizes from a standard Class A pan as used by the United States Environmental Science Services (U.S. Weather Bureau). The Class A pan is 4 feet in diameter and 10 inches deep, made of unpainted galvanized iron, and supported by a wooden frame as shown in Figure 4. The Class A pan has been adopted by the World Meteorological Organization and is now used in many countries. It has been used in Iran for 7 years.

Transpiration. Transpiration is the loss of water in the form of vapor from plants. All aerial parts of plants may lose some water by transpiration, but most water is lost through the leaves in two stages:

1. Evaporation of water from cell walls into intercellular spaces.
2. Diffusion through stomates into the atmosphere.

Some water vapor also diffuses out through the epidermal cells of leaves and the cuticle. Small amounts of cuticular transpiration may take place in herbaceous stems, flower parts, and fruits (26).

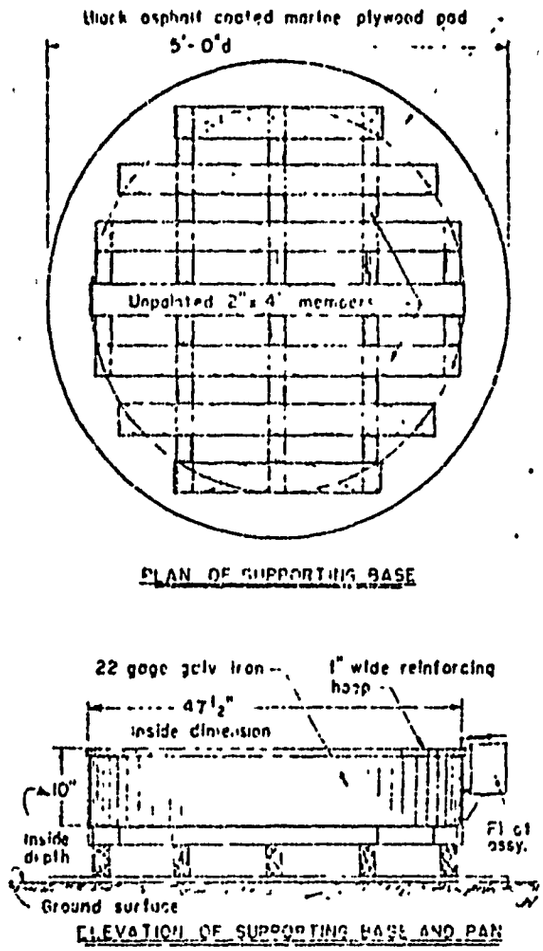

Standardized 4-foot diameter evaporation pan and base.

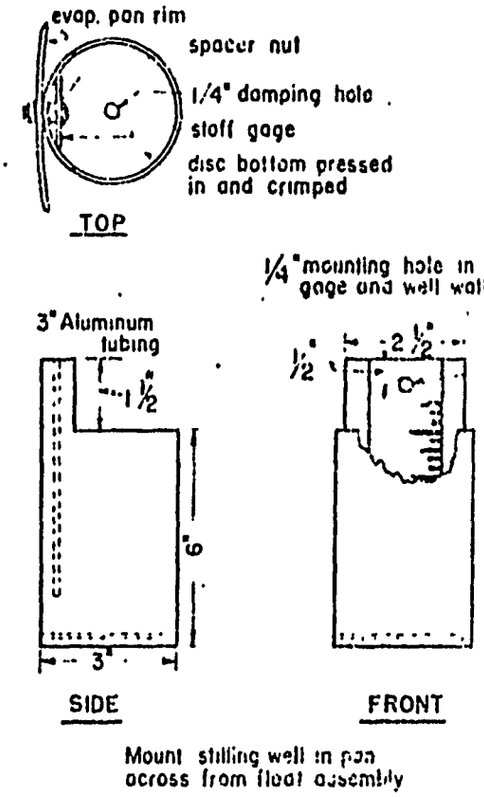

Stilling-well and staff-gage for standardized evaporation pan.

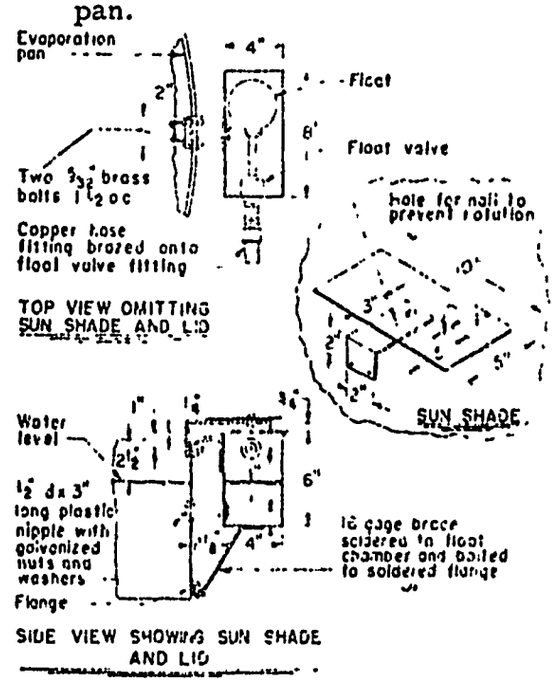

Details of float chamber and float for holding water level in the evaporation pan constant.

Figure 4. Standard United States Environmental Science Services (U.S. Weather Bureau) Class A Evaporation Pan (47)

Evapotranspiration. Evapotranspiration is the sum of water lost by transpiration and evaporation from the soil or from exterior portion of plants where water may have accumulated from rainfall, dew, or exudation from the interior of the plant (26). Potential evapotranspiration, Etp, as used in this thesis, means the evapotranspiration from a short grass turf growing under favorable conditions when moisture content of soil is not a limiting factor. This definition of potential evapotranspiration is similar to Penman's definition. He states that it "is the amount of water transpired in unit time by a short green crop, completely shading the ground, of uniform height and never short of water" (11).

Consumptive Use. Consumptive use is, for all practical purposes, identical with evapotranspiration. Its definition differs by the inclusion of water retained in plant tissues. For most agricultural plants, the amount of water retained by plants is insignificant when compared to evapotranspiration (26). Consumptive use may be defined as: "The sum of the volumes of water used by the vegetative growth of a given area in transpiration and building of plant tissues and that evaporated from adjacent soil, snow, or intercepted precipitation on the area in any specified time, divided by the area." This definition was adopted with minor changes by the Committee on Irrigation of the American Society of Agricultural Engineers in 1939 (3).

Consumptive Water Requirement. The consumptive water requirement is the amount of water potentially required to meet the evapotranspiration need of vegetative areas so that plant production is not limited from lack of water (45).

Peak Period Consumptive Use. Peak period consumptive use is the average daily rate of use of a crop occurring during a period between normal irrigations when such rate of use is at a maximum (45).

Duty of Water. Duty of water is the quantity of irrigation water applied to a given area during the season for the purpose of maturing the crop (3). This term was formerly extensively used but is seldom found in recent literature.

Irrigation Requirement. Irrigation requirement is the quantity of water, exclusive of precipitation, that is required for crop production. It includes surface evaporation and other economically unavoidable wastes (3).

Dependable Precipitation. Dependable precipitation has been defined as that precipitation equaled or exceeded during three years out of four years, or a 75 percent probability. It is determined from a sorting or ranking procedure. Where individual years of data are not available, an approximation may be made by using a relationship developed from mean precipitation and dependable precipitation (18).

Effective Rainfall. Effective rainfall is precipitation falling during the growing period of the crop that is available to meet the consump-

tive water requirements of crops. It does not include the precipitation lost to deep percolation below the root zone nor that lost by surface runoff (45).

Irrigation Efficiency. Irrigation efficiency is the percentage of applied irrigation water that is stored in the soil and made available for consumptive use by the crop. When the water is measured at the headgate, it is called farm irrigation efficiency; when measured at the field, it is called field irrigation efficiency; and when measured at the point of diversion, it may be designated as project efficiency (45).

Net Irrigation Requirement. The actual amount of irrigation water required to meet the crop demands without any deficiencies if it could be applied uniformly without deep percolation or runoff. Same as consumptive use requirement.

Irrigation Water Requirement. Irrigation water requirement is the net irrigation water requirement divided by the irrigation efficiency (45).

Adequacy Percentage. Adequacy percentage is the percentage of years in the precipitation record during which precipitation for any given month equals or exceeds the potential evapotranspiration (18).

Moisture Availability Ratio. Moisture availability ratio is an index of the adequacy of precipitation to supply moisture requirements. It is computed by dividing the dependable precipitation by the potential evapotranspiration (18).

Moisture Deficit. Moisture deficit is the difference between potential evapotranspiration and dependable precipitation (18).

Stream-Flow Depletion. Stream-flow depletion is the amount of water that flows into a valley, or onto a particular land area, minus the amount that flows out of the valley, or off that particular land area (3).

Field Capacity. Field capacity is the moisture percentage on a dry weight basis of a soil after rapid drainage has taken place following an application of water, provided there is no water table within capillary reach of the root zone. This moisture percentage usually is reached two to four days after an irrigation; the time interval depends on the physical characteristics of the soil (45).

Permanent Wilting Point. The permanent wilting point is the moisture percentage on a dry weight basis at which plants can no longer obtain sufficient moisture to satisfy their moisture requirements; they will wilt permanently unless moisture is added to the soil profile (45).

Carryover Soil Moisture. Carryover soil moisture is moisture stored within the root zone depth of a soil during the winter when the crop is dormant, or before the crop is planted. This moisture is available to help meet the consumptive water needs of the crop (45).

Rain. Rain is drops of water falling from visible clouds, and includes drizzle, which is composed of very small and uniformly dis-

persed droplets that may appear to float while following air currents. Unlike fog droplets, however, drizzle falls to the ground (44).

Snow. Snow is white or translucent ice crystals, chiefly in complex hexagonal form. Meteorological conditions for snow are similar to those of rain, but the air temperature must be freezing (32°F) or lower (44).

Dew. Dew is liquid water that condenses upon objects at or near the surface of the earth at temperatures above freezing. Dew occurs on calm, clear nights.

Freeze. Freeze is the condition of lower atmosphere when the temperature of surface objects is 32°F or lower, and it may or may not be accompanied by frost.

Frost. Frost is a deposit of thin ice crystals in the form of scales, needles, feathers, or fans in crystalline form on objects at temperatures of 32°F or lower.

FACTORS AFFECTING EVAPOTRANSPIRATION

Evapotranspiration is generally considered to be a function of:

1. Climatic factors.
2. Soil factors.
3. Plant factors.

Climatic Factors

Temperature. Since evaporation is basically a function of the vapor pressure deficit, which is in turn a function of both temperature and humidity, it can be seen that temperature is a very important climatic factor. The U.S. Soil Conservation Service (45) reports that for a long-term period, temperature is a good measure of the incoming solar radiation.

Humidity. Since evaporation is also a function of the vapor pressure deficit, one can reason that potential evapotranspiration increases with low humidity and decreases with high humidity. Where the average relative humidity is low during the growing season, a greater water use by the plant is expected to occur, provided water is freely available (45).

A number of expressions of humidity are used in formulas for estimating evapotranspiration: vapor pressure, relative humidity, dew point, vapor pressure deficit, and wet-bulb depression (46).

Wind Speed. The literature review by Wiegand and Taylor (46) summarizes the effect of wind speed as follows:

a. Changes in wind speed affect both the turbulent transfer of the water vapor away from the evaporating surface and the temperature of the evaporating surface.

b. The relation between wind speed and turbulence yields a power dependence of evaporation on wind speed.

c. The quantitative dependence of evaporation on wind speed is not independent of the geometry of the system studied.

d. Variation in wind speed does not cause appreciable mass movement of water vapor within a porous drying medium such as a soil or dense vegetative cover. (Some authorities question this conclusion.)

e. Reported correlations between wind speed and evaporation are characterized by low correlation coefficients.

One would expect that evapotranspiration is less influenced by wind speed than by temperature and humidity.

Radiation. The energy supplied for evapotranspiration comes from the sun. The solar constant is about 2.0 calories per square centimeter per minute (cal/cm^2/min), but interference and filtering by the atmosphere, surface slope, and declination of the earth, latitude, and rotation of the earth (hour of the day) all tend to reduce radiation to a maximum value of about 700 cal/cm^2/day. In an arid environment, with no evaporating medium, the solar energy reaching the earth's surface is largely absorbed by the earth's crust, which in turn heats the air in contact with it. The remainder is reflected or radiated back to the sky.

In an evaporating environment, such as a well vegetated area, much of the incoming energy is used in the evaporation process (46), and the remainder is dissipated in heating the earth's crust, the air, and in back radiation. Review of evaporation as a function of radiation shows that:

a. Evapotranspiration is in phase with radiation flux rather than temperature.

b. The transpiration rate increases with intensity of radiation.

c. The effect of radiation on evaporation from soil depends on the content and the distribution of soil moisture (46). Because of the earth's movement and axial inclination, the hours of daylight during the summer are much greater in the higher latitudes than at the equator. This increases evapotranspiration and produces an effect similar to that of lengthening the growing season (45).

Sunshine Percentage. The ratio of hours of sunshine to day length, or percentage of possible sunshine, is also an important factor affecting evapotranspiration, since it affects the solar radiation reaching the earth's surface. This factor is especially important when one uses extraterrestrial radiation as a parameter in formulas for estimating potential evapotranspiration.

Precipitation. The amount and rate of precipitation directly affects the amount of irrigation water needed for plant growth. Even though a light shower may not contribute significantly to the soil moisture supply, it certainly reduces the evapotranspiration and uptake of moisture from the soil by the plants because it generally reduces the temperature and increases the humidity.

Advection. Crops grown in small irrigated areas surrounded by large arid or semi-arid areas receive additional energy for vaporization of water by advection. This is called "oasis effect", and seems to be very significant in most parts of Iran.

Soil Factors

Moisture Distribution and Site of Evaporation. Moisture distribution during drying was studied by Sherwood and co-workers in 1932. They found that moisture distribution is a parabolic function of the distance from the surface during the constant rate period of drying. Evaporation as a function of soil moisture distribution appears to have been neglected by the soil scientists. Staple (46) in 1956 suggested that "computation of evaporation must be a stepwise process involving the calculation, in short time intervals, of both the changing moisture profiles in the drying soil and the resulting evaporation at the surface."

Closely allied with the moisture distribution is the site of evaporation. The observed accumulation of soluble salts at the surface in

arid and irrigated areas is a good evidence that when the profile is moist enough for liquid flow to keep pace with evaporative demand, evaporation occurs mostly at the soil surface (46).

Soil Mulches and Crop Residues. Use of soil mulches has long been recognized as a possible method of suppressing moisture loss by evaporation (46).

Depth of the Water Table. From the review of the literature, it appears that the steady state rate of evaporation from water tables under natural conditions can be predicted from the moisture flow equation and knowledge of the moisture characteristics of soils. The agreement between prediction and experiment suggests that the unsaturated liquid phase flow limits the rate of evaporation. This is particularly true for water tables two feet or more below the soil surface (46).

Plant Factors

Stage of Plant Growth. The stage of plant growth has a very significant influence on the consumptive use rate, assuming that other factors are constant. During the stage of vegetative growth from time of emergence, the water use increases from a low value and reaches a maximum when the growth is at its peak, and then slowly decreases as the plant matures. The surface area of the leaves is also important for the absorption of light energy and the interchange of gases with the environment.

Length of Growing Season. The length of the growing season is considered to be the period between killing frosts. For annual crops, however, it is shorter than the frost-free period because crops are often planted after spring frosts are past and they may mature before the first frosts in the fall. The length of growing season which is tied closely to temperature has major effects on seasonal water use by plants (45).

ESTIMATION OF EVAPOTRANSPIRATION

History

The effect of sunshine and heat in stimulating transpiration was studied in England as early as 1691 (1). Dalton's work in 1798 led to the development of empirical formulas now being used to estimate evaporation and evapotranspiration.

The passage of the Hatch Act in 1887 was responsible for the establishment of agricultural research stations in the United States. These stations provided the first facilities for water-use research (26).

In the western United States during the late 1800s and early 1900s water delivered to the farm was often measured, but measurements of actual consumptive use were seldom made. Later, factors causing and affecting water loss from plants were studied. For the next two decades emphasis was placed on the development of procedures for measuring the actual consumptive use, and in the development of formulas for estimating monthly and seasonal consumptive use of water by using available climatological data (26).

From 1887 on, various investigators carried out research on water use in Colorado, Wyoming, and Utah. Until 1920, the term "duty of water" was used extensively to describe the amount of water being used for irrigation (26).

Widstoe et al. in 1902, Fortier in 1970, and Teele in 1908, established field and plot studies to determine the relation between the quantity of water used and crop returns and losses of water by evaporation (26).

Fitzgerald in 1886, Bigelow in 1910, Himus in 1929, Rohwer in 1931, and Braslavskii and Vikulina in 1963, derived empirical equations by graphical and statistical techniques to equate evaporation to measured meteorological data (33).

Briggs and Shantz early in the beginning of this century indicated close correlation among transpiration and evaporation from free water surfaces, air temperature, solar radiation, and wet bulb depression (34). Hedke in 1924 developed the effective-heat method on the Rio Grande in New Mexico. By this method, consumptive use is estimated from a study of the heat units available to the crops of a particular valley or growing area. Blaney and Israelsen in 1936 used this method to estimate the consumptive use of water in the Mesilla Valley, New Mexico (5). Lowry and Johnson in 1937 developed a similar method that has been used by the U.S. Bureau of Reclamation (31). Blaney-Criddle, and Morin in 1941 developed empirical formulas from long-term climate data of the Pecos River Basin in New Mexico and Texas. The Pecos formula was simplified by Blaney and Criddle in 1945 when they eliminated the humidity factor (6). This Blaney-Criddle formula has been extensively used to estimate monthly water requirements for a large

number of crops. For annual crops, the monthly K factor varies widely during the growing season, and the principal difficulty in using this formula is to properly estimate this K factor. In 1965, J. T. Phelan of the United States Soil Conservation Service modified the Blaney-Criddle formula by making the K factor the product of two factors, $K = K_c K_t$, where K_c is a crop factor and K_t is a temperature factor:

$$K_t = 0.0173t - 0.314.$$

This modified formula was originally applied to lawn turfs but was later adopted to other crops (42).

Hargreaves in 1947, when working for the United States Bureau of Reclamation, suggested a method of calculating consumptive use for the Central Valley of California. This method was based on local records of evaporation, temperature, and humidity (8).

Penman in 1948 in England correlated evaporation and evapotranspiration from grass with meteorological observations and developed an index for estimating evapotranspiration (8).

From 1960 to the present J. E. Christiansen and his associates at Utah State University have developed formulas for estimating the evaporation and potential evapotranspiration from climatic data for many countries, particularly those of Latin America. His objection was to develop a practical procedure for estimating evaporation and/or potential evapotranspiration from the climatological data published by meteorological sources.

The work of other investigators---Bowen in 1926, Cummings and Richardson in 1927, Thornthwaite in 1948, Halkais, Veihmyer and Hendrickson in 1955, Munson in 1960, W. O. Pruitt at Davis since 1959, and many others have contributed to the science of evaporation and evapotranspiration, but they have not developed formulas that could be applied to the problems of estimating potential evapotranspiration for Iran.

Direct Methods of Determining Evapotranspiration

Soil Moisture Depletion. Soil moisture content is determined within the root zone by gravimetric sampling or using a neutron probe. When the moisture is measured before and after irrigations and some between irrigations, a curve is drawn from which monthly and seasonal use can be obtained. This method is more suitable in uniform soil that has no influence on groundwater table within the root zone. Deep percolation must be avoided, and the water used cannot be measured for periods less than one week.

Field Plot Studies. Yield of crops increases as the water use increases up to a point, and then it will decrease. Several investigators have used this as an index for measuring consumptive use. Dr. John A. Widtsoe's work from 1902 to 1911 on fourteen different crops is a good example (2).

Lysimeters. A lysimeter consists of a tank in which a crop is grown under conditions where the evapotranspiration can be measured. There are two basic kinds of lysimeters: weighing and drainage. In order to give reliable results they must be located in a field of like vegetation so that both the radiative and advective energy received by the crop in the lysimeter is the same as for the surrounding area. Pruitt at Davis, California has used a very sensitive 6.1 meter diameter weighing lysimeter for measuring hourly and daily rates of evapotranspiration from grass to obtain potential Etp values (35).

With drainage-type lysimeters the water added and the water drained from the soil is weighed or measured, the difference being the evapotranspiration. Lysimeters of this type are not suitable for short-time determinations, but when properly used they may give reliable results. A major problem is to grow crops in lysimeters such that the height and density of the vegetation in the lysimeter is the same as for the surrounding area. Serious errors may result when the plants in the lysimeter grow more vigorously than those outside the lysimeters, a common occurrence.

Inflow-Outflow. The difference between the inflow and the outflow, both surface and subsurface, plus the algebraic difference between groundwater storage at the beginning and at the end of the period, equals the consumptive use in the given area. It is most suitable for large areas.

The following formula is used to compute the consumptive use with the inflow-outflow method:

$$U = (I + R) + (G_s - G_e) - Q \qquad [1]$$

where

U = consumptive use

I = inflow

R = rainfall

Q = outflow

G_s, G_e = volumes of water in ground stroage at the beginning and at the end of the period (4).

A consistant set of units must be used. Usually all terms are expressed in equivalent depth per unit time, such as mm per month.

Integration. The integration method is the summation of the products of unit consumptive use for each crop times its area, plus the unit consumptive use of native vegetation times its area, plus water surface evaporation times water surface area, plus evaporation from bare land times its area (24). This method is used to estimate the total evapotranspiration from a large area of mixed types of vegetation (including bare areas and water surfaces) where unit values may be estimated with reasonable accuracy. It may be used as a check against the inflow-outflow method.

Groundwater Fluctuations. An analysis of the fluctuations in the elevation of groundwater tables can be used as an index of average

evapotranspiration, provided the area is flat with adequate water supply. This method has been used in Arizona, California, and Utah (36), but it is subject to appreciable error under some conditions.

Measuring Matric Potential. Tensiometers measure energy status of soil water directly, but since the instrument functions only over a part of the available moisture range, its use for measuring the actual evapotranspiration is limited. Tensiometers have to be calibrated for different soils in order to obtain quantitative results.

Micrometeorological Methods of Determining Evapotranspiration

Micrometeorological methods can be used to estimate evapotranspiration over very short periods of time (e.g., a few minutes). They can provide flux measurements (e.g., CO_2 and heat), and can provide environmental information (e.g., humidity, temperature, etc.) (20).

Aerodynamic Equations

Aerodynamic methods, also called profile or mass transport methods (20), are designed to measure or to estimate the rate of water vapor flow from an evaporating surface and particularly as it is affected by turbulence. The validity of this method depends on three propositions for which there is experimental support under fully turbulent to nearly neutral atmosphere conditions. These are:

1. That the mean wind speed varies logarithmically with height.
2. That eddy shear stress is constant with height.

vapor diffusion, particularly that caused by turbulence. The validity of this method depends on three propositions for which there is experimental support under fully turbulent to nearly neutral atmospheric conditions. These are:

1. That the mean wind speed varies logarithmically with height.

2. That eddy shear stress is constant with height.

3. That the eddy diffusivity for water vapor, K_w, is equal to that for momentum, K_m.

A near neutral atmosphere and an open uniform site are also important conditions to be considered (37).

Fluctuation Theory. This technique is theoretically sound, but the instrumentation is only partially developed and quite expensive. The method has been successful only for the evaluation of sensible heat flow (H).

Munn in 1961 listed three points required in the design of instrumentation for this method:

1. The separation between instruments measuring specific humidity and wind speed must be smaller than the smallest eddies contributing to the water vapor flux.

2. The sensing instruments must have the same response time, otherwise spurious covariance will result.

3. The responding time of the sensing elements must be sufficiently short to record the flux contributions of very small eddies (11).

Turbulent Transport Equations. Evapotranspiration can be estimated by using the following formula:

$$Et = -K_w \frac{\partial P\overline{\nu}}{\partial z} \qquad [2]$$

in which

Et = evapotranspiration

K_w = eddy transfer coefficient of water vapor (cm^2/sec)

$P\nu$ = vapor density (absolute humidity) (g/cm^3)

z = distance from evaporating surface.

To evaluate K_w is a difficult task, but it can be approximated by:

$$K_w \approx \frac{k^2 (\overline{u}_2 - \overline{u}_1)(z_1 - z_2)}{(\ln \frac{z_2}{z_1})^2} \Phi \qquad [3]$$

in which

$\overline{u}_2$, $\overline{u}_1$ = average wind speeds at heights z_1 and z_2

Φ = temperature stability correction requiring measurements of changes in wind and temperature

$k^2 = 0.16$ (k = Von Karaman's constant).

The measurements necessary for determining Φ and $(u_2 - u_1)$ are difficult. The basic assumptions are not always met, but this method has given reasonable results under some conditions.

Dalton's Formula. Dalton's formula is the oldest, developed in 1798, to represent the evaporation process from a water surface mathematically as:

$$E_o = (e_s - e)\, f(u) \qquad [4]$$

where

e_s = vapor pressure at the evaporating surface

e = vapor pressure at some height above the surface

$f(u)$ = function of the horizontal wind velocity.

This formula, with a suitable wind function, has been used to estimate evaporation but has not been used for evapotranspiration because of the difficulty in measuring e_s at the plant surface (11).

Thornthwaite and Holzman Equation. Thornthwaite and Holzman derived the first aerodynamic equation in 1939 for evapotranspiration over short vegetation:

$$Et = \frac{k^2 (\bar{u}_2 - \bar{u}_1)(P\bar{v}_1 - P\bar{v}_2)}{(\ln (z_2/z_1))^2} \qquad [5]$$

where

Et = evapotranspiration

k = Von Karman's constant, usually taken as 0.40

u_1, u_2, $P\nu_1$, and $P\nu_2$ are the wind speeds and specific humidities at the height z_1 and z_2, respectively.

Pasquill in 1950 expanded this equation for tall crops in the form:

$$Et = \frac{k^2 \bar{u}_2 \left(1 - \frac{1}{u_2}\right) (P\bar{\nu}_2 - P\bar{\nu}_1)}{\left[\ln \frac{z_2 - d}{z_1 - d}\right]^2} \qquad [6]$$

where d is the zero plane displacement. Its evaluation requires the difficult task of measuring wind profile during the different time periods of plant growth. This method is difficult to apply to field conditions and if the assumptions are not met in actual practice, a correction must be applied to Pasquill's formula as follows:

$$Et = \left[\frac{k \bar{u}_2 \left(1 - \frac{u_1}{u_2}\right) (P\bar{\nu}_2 - P\bar{\nu}_1)}{\left[\ln \frac{z_2 - d}{z_1 - d}\right]^2}\right] \Phi \qquad]$$

where

Φ = 1/1 + 10 Ri if Ri is positive

Φ = (1 - 10 Ri) if Ri is negative

Φ is a function of the Richardson number, Ri, which can be computed by the following formulas:

$$Ri = \frac{g\,(\partial T/\partial z)}{T_a\,(\partial \bar{u}/\partial z)^2} \qquad [8]$$

where

g = 981 cm^2/sec, the acceleration of gravity

T_a = absolute temperature

Richardson's number can also be approximated by:

$$Ri \approx 3.4\,(T_2 - T_1)\,(z_2 - z_1)/(\bar{u}_2 - \bar{u}_1)^2 \qquad [9]$$

as stated by Chang (11) and Rose (37).

Energy Budget Method

The energy budget is based on the law of conservation of energy. Change in stored energy is equal to the difference between incoming and outgoing energy. Evaporation is the residual and therefore subject to considerable error if it is compared to the other terms in the energy budget equation.

The energy budget equation, expressed as calories per square centimeter per day, in a broad general form is:

$$Q_o = Q_s - Q_r + Q_a - Q_{ar} - Q_{bs} + Q_v - Q_w - Q_h - Q_e \qquad [10]$$

where

Q_o = net change in stored energy

Q_s = incoming solar or short-wave radiation

Q_r = reflected short-wave radiation

Q_a = incoming atmospheric or long-wave radiation

Q_{ar} = reflected long-wave radiation

Q_{bs} = back radiation emitted by the water surface

Q_v = net advected energy into the body of water

Q_w = energy advected with the evaporated water

Q_h = energy transferred between the water surface and overlying air as sensible heat

Q_e = energy required to change the evaporated water to the vapor state without a change in temperature.

Conduction of energy through the bottom, heating due to chemical and biological processes, and the transformation of kinetic energy into thermal energy were assumed to be negligible (32). The energy budget equation in the more simplified form generally used is:

$$Rn = G + H + L\,Et + \text{Photosynthesis} + \text{Plant Heating} \qquad [11]$$

where

Rn = net radiation, $cal/cm^2/day$

G = soil heat flow, $cal/cm^2/day$

H = sensible heat flow, $cal/cm^2/day$

L = latent heat of vaporization, usually taken as 585 cal/cm^3

Et = evapotranspiration, cm/day.

Because the values for photosynthesis and plant heating are usually very small, they are usually neglected; therefore, evapotranspiration can be estimated by:

$$Et = (Rn - G - H)/L \qquad [12]$$

Rn can be measured with a radiometer and G with a heat flow plate or calorimetrically. The measurement of H is difficult and usually it is determined aerodynamically.

$$H = -\rho_a C_p Kh \frac{\partial \overline{T}}{\partial z} \qquad [13]$$

where

ρ_a = density of moist air, gm/cm^3

C_p = specific heat of moist air at constant pressure, $cal/gm/^oC$

Kh = eddy transfer coefficient for heat, cm^2/sec

$\frac{\partial \overline{T}}{\partial z}$ = temperature gradient.

Combination Equation

Since the measurement of H is difficult, as has been mentioned above, the energy budget formulas are generally used in combination with aerodynamic formulas in order to estimate evapotranspiration.

Bowen Ratio. Bowen (32) concluded that the process of evaporation and diffusion of water vapor from any water surface into the

overlying body of air is exactly similar to that of conduction of specific heat energy from the water surface into the same body of air. Because of this similarity, the ratio, which bears Bowen's name, of the energy loss by conduction to that by evaporation can be expressed as:

$$\beta = H/(L\ Ev) \qquad [14]$$

and thus evapotranspiration, Et, can be estimated from the equation:

$$Et = (Rn - G)/(L\ (1 + \beta)) \qquad [15]$$

where β is Bowen's ratio, and other terms in the equation are as defined before. If the moisture is not limiting as for potential evapotranspiration, Etp, this method is useful because β is small.

Penman's Method. Penman in 1948 and 1956 (38) combined the aerodynamic and the energy budget approaches to eliminate surface measurement of gradients. His equation requires observation of radiation, temperature, humidity and wind. Penman's equation in a general form is given as:

$$E_o = \frac{\Delta\ HnT/L + \gamma\ Ea}{\Delta + \gamma} \qquad [16]$$

where

E_o = evaporation from open water surface in mm/day

Δ = slope of the saturation vapor pressure versus temperature curve (dea/dt) at the air temperature T in millibars/C°

= the psychrometric constant or the ratio of specific heat of air to the latent heat of evaporation of water

Hnt = net radiation (cal/cm / 24 hrs)

L = latent heat of vaporization (590 cal/ml of water)

$$Hnt = (1 - rw)\,RI - RU \qquad [17]$$

in which

rw = reflection coefficient for water (0.05)

RI = global short-wave radiation

RU = net long-wave radiation

Penman in 1948 gave the values of RI and RU as:

$$RI = (0.18 + 0.55\ n/N)\ Qn \qquad [18]$$

$$RU = \sigma T^4 (0.56 - 0.092\ \sqrt{e_z})\ (0.10 + 0.90\ n/N)$$

$$E_a = 0.35\ (1.0 + 0.54\ Uz)\ (E_z - e_z) \qquad [20]$$

in which

n/N = ratio between actual and possible hours of sunshine

σ = Stefan-Boltzman constant

Qn = theoretical maximum extraterrestrial radiation (cal/cm/24 hrs)

Values of Qn can be obtained from standard tables such as Brunt in 1944 and Smithsonian Meteorological Tables of 1961.

T^4 = theoretical black body radiation at mean absolute air temperature

U_z = wind speed at two meters above the ground surface (m/sec)

e_z = mean vapor pressure of the atmosphere (mm Hg)

E_z = saturation vapor pressure at mean air temperature (mm Hg)

$E_z - e_z$ = vapor pressure deficit of the atmosphere at the shelter height, usually 2 meters.

Penman suggested that when wind measurements (U) are taken at other heights (h, in meters), the wind velocities can be corrected to the 2-meter height by using the following relationship:

$$U_z = U_h \frac{0.8}{\log h + 0.5} \qquad [21]$$

Finally, the formula for free water surface evaporation is then:

$$E_o = \frac{\Delta}{\Delta + \gamma}[(1 - r_w)RI - RU]/L + \frac{\gamma}{\Delta + \gamma}[0.35\,(0.5 + 0.54)\,U_z(E_z - e_z \qquad [22]$$

Potential evapotranspiration can be determined first by calculating E_o then converting it to Et by a factor $F = Et/E_o$ as stated by Penman in 1948 (38).

Although Penman's formula was developed from a theoretical base it contains empirical functions of sunshine, vapor pressure and wind velocity. Its principal disadvantages are its complexity and the fact that the parameters used are seldom measured and reported by meteorological services.

Empirical Equations

A considerable number of empirical equations have been developed to estimate potential evapotranspiration. It is not the objective of this thesis to go into details of these methods other than mentioning them.

The methods used to compute evaporation and potential evapotranspiration in this thesis will be explained fully.

Thornthwaite. Thornthwaite developed a method based on temperature which can be presented by the formula:

$$Etp = 1.6d\ (10\ T_c/I)^a \qquad [23]$$

where

Etp = unadjusted monthly potential evapotranspiration in cm

d = a day length correction factor

T_c = mean monthly temperature in ^oC

I = Thornthwaite's temperature-efficiency index, being equal to the sum of 12 monthly values of heat index, "i"

$$i = (T_c/5)^{1.514} \qquad [24]$$

$$a = 0.000000675I^3 - 0.0000771I^2 + 0.017921I + 0.49239. \qquad [25]$$

This method has been found suitable to humid, well-vegetated areas (13).

As can be noted, this formula depends on only the mean monthly temperature, T_c, and the day length correction factor, d. It neglects such important parameters as wind, humidity, sunshine and/or radiation.

Hamon. Hamon derived an equation for computing potential evapotranspiration based on possible hours of sunshine and the saturated water vapor density at the daily mean temperature (21).

His formula is:

$$Etp = C\ D^2\ Pt/100 \qquad [26]$$

where

C = 0.55

D = possible hours of sunshine

Pt = saturated vapor density (absolute humidity)

Turc. As stated by Hamon (21), Turc has a formula for estimating Etp in mm per day based on solar radiation which can be written:

$$Etp = 0.013\ T_c\ (R_s + 50)/(T_c + 15) \qquad [27]$$

in which

R_s = mean incoming radiation in langleys per day (cal/cm^2/day)

Where data for radiation, R_s, are not available they can be computed by the following equation (14):

$$R_s = R_t\ (0.18 + 0.62\ D_h) \qquad [28]$$

in which

R_t = theoretical radiation

D_h = daylight hours expressed decimally.

Jensen-Haise. Jensen and Haise developed a formula for computing Etp based on mean air temperature and solar radiation (43). Their equation is as follows:

$$Etp = K_c\ (0.025\ T_c + 0.08)\ R_s/L \qquad [29]$$

in which

Etp is expressed in inches per day

K_c = crop factor

T_c = mean air temperature in ^oC

R_s = solar and scattered radiation in inches per day

When solar radiation data are not available, the following formula proposed by Angstrom with constants developed by S. Fritz and J. H. MacDonald can be used:

$$R_s = R_{so} \ (0.35 + 0.615) \qquad [30]$$

in which

R_s = solar radiation

R_{so} = solar radiation on cloudless days

Makkink. Makkink's formula is based on solar radiation measurement weighted according to air temperature (11). He developed his formula in the Netherlands by using the lysimeter measurements of potential evapotranspiration from short grass. His formula is:

$$Etp = 0.61 \ R_s \frac{\Delta}{\Delta + \gamma} - 0.12 \qquad [31]$$

in which

R_s = incoming radiation in mm/day

Δ = the slope of the saturated vapor pressure-temperature curve at the mean air temperature

γ = psychrometeric constant = 0.49 for ^{o}C and mm of mercury, or 0.27 for ^{o}F and mm of mercury.

This formula was developed in 1957 but has not been widely tested.

Blaney-Morin. Blaney and Morin in 1942 derived the following formula from New Mexico and Texas data (11):

$$u = k\, t_f\, P\, (114 - h) \qquad [32]$$

in which

u = monthly consumptive use in inches

k = monthly crop coefficient

T_f = mean monthly air temperatures in ^{o}F

P = monthly percentage of daytime hours in the year

h = mean monthly relative humidity.

Table 8 gives the monthly percentages of daytime hours of the year for latitudes 24° to 50° north of the equator.

Blaney-Criddle. Blaney and Criddle (4) in 1950 simplified the Blaney-Morin formula by dropping the humidity term. Their formulas are:

$$u = k\, P\, T_f/100, \text{ or}$$

$$u = k\, f, \text{ and}$$

$$U = K\, F \qquad [33]$$

where

u = monthly consumptive use in inches

U = consumptive use for the growing season in inches

K = seasonal crop coefficient

F = sum of the monthly consumptive use factors, f, for the growing season

$f = T_f\, P/100.$

Papadakis. Papadakis in Argentina in 1961 computed potential evapotranspiration with his equation that can be written as (13):

Table 8. Monthly Percentages of Daytime Hours of the Year for Latitude 24° to 50° North of the Equator (11)

Month	Latitudes in Degrees North of Equator													
		26	28	30	32	34	36	38	40	42	44	46	48	50
January	7.58	7.49	7.40	7.30	7.20	7.10	6.99	6.87	6.76	6.62	6.49	6.33	6.17	5.98
February	7.17	7.12	7.07	7.03	6.97	6.91	6.86	6.79	6.73	6.65	6.58	6.50	6.42	6.32
March	8.40	8.40	8.39	8.38	8.37	8.36	8.35	8.34	8.33	8.31	8.30	8.29	8.27	8.25
April	8.60	8.64	8.68	8.72	8.75	8.80	8.85	8.90	8.95	9.00	9.05	9.12	9.18	9.25
May	9.30	9.38	9.46	9.53	9.63	9.72	9.81	9.92	10.02	10.14	10.26	10.39	10.53	10.69
June	9.20	9.30	9.38	9.49	9.60	9.70	9.83	9.95	10.08	10.21	10.38	10.54	10.71	10.93
July	9.41	9.49	9.58	9.67	9.77	9.88	9.99	10.10	10.22	10.35	10.49	10.64	10.80	10.99
August	9.05	9.10	9.16	9.22	9.28	9.33	9.40	9.47	9.54	9.62	9.70	9.79	9.89	10.00
September	8.31	8.31	8.32	8.34	8.34	8.36	8.36	8.38	8.38	8.40	8.41	8.42	8.44	8.44
October	8.09	8.06	8.02	7.99	7.93	7.90	7.85	7.80	7.75	7.70	7.63	7.58	7.51	7.42
November	7.43	7.36	7.27	7.19	7.11	7.02	6.92	6.82	6.72	6.62	6.49	6.36	6.22	6.07
December	7.46	7.35	7.25	7.14	7.05	6.92	6.79	6.66	6.52	6.38	6.22	6.04	5.86	5.65
Total	100.	100.	100.	100.	100.	100.	100.	100.	100.	100.	100.	100.	100.	100.

$$Etp = 0.1875\ (e_{am} - e_{dm}) \qquad [34]$$

where

e_{am} = saturation vapor pressure at the average daily maximum temperature of the month in millibars

e_{dm} = saturation vapor pressure at the temperature of dew point, in millibars.

FORMULAS DEVELOPED BY CHRISTIANSEN AND ASSOCIATES AT UTAH STATE UNIVERSITY

Christiansen

Pan evaporation, as measured with a Class A pan under standardized conditions, is a reliable index of climate as it pertains to evapotranspiration. Christiansen (8), (7), and (9) and co-workers at Utah State University first developed a formula for estimating Class A pan evaporation using, as a basis, extraterrestrial radiation, R_t, and climatic data. Christiansen later developed formulas for relating potential evapotranspiration to pan evaporation and to radiation and climatic data. The general form of the equation is

$$E = K R C_x \qquad [35]$$

in which

E = evaporation or evapotranspiration

K = dimensionless constant determined from the analysis of many data

R = extraterrestrial or measured incoming radiation, expressed in the same units of E

C = empirical coefficient, which is the product of any number of subcoefficients each expressing the effect of a given climate or other factors such as temperature, wind speed, sunshine, relative humidity, elevation, and month, thus

$$C = C_T C_W C_S C_H C_E C_M.$$

Each coefficient can be expressed by an equation, generally of the form:

$$C_x = C_o + A (X/X_o) + B (X/X_o)^2 \qquad [36]$$

in which

X = a specific climatic factor

X_o = a standard, approximate mean, value of the factor

$C_o = C_x$ at $X = 0$

$X_o = X$ at $C_x = 1$

A and B are constants, such that $C_o + A + B = 1$

For example, $CT = C_o + A\,(T/T_o) + B\,(T/T_o)^2$.

In the development of the formulas, the considerations and limitations kept in mind can be enumerated as follows:

1. "Only data of the kind that are readily available to the user should be required for application of the procedure, and only such data should be used in the development of formulas.

2. The procedures or formulas should utilize all of the available climatic parameters that are found to significantly affect evaporation or evapotranspiration, but they should permit use of more limited data.

3. The procedures should require a minimum of personal judgment on the part of the user.

4. The formula developed should be dimensionally sound and should be applicable in either English or metric units.

5. The formulas should, insofar as possible, provide the practicing engineer with a working tool that will give reliable results when applied to climatic data from any part of the world" (7).

One of the important advantages of this form of formula is that if any one of the parameters is missing, it can be assumed as unity.

Christiansen's Pan Evaporation Formula. Using extraterrestrial radiation, R_t, as a base, this formula, which is based on data from many countries of the world is:

$$E_v = 0.459\ R_t\ C_T\ C_W\ C_H\ C_S\ C_E\ C_M \qquad [37]$$

where

R_t = extraterrestrial radiation reaching the earth's atmosphere, computed from a solar constant 2 cal/cm^2/min (Tables 9 and 10)

$$C_T = -0.0673 + 0.8976\ (T/T_o) + 0.1722\ (T/T_o)^2 \qquad [37a]$$

if temperature in ^oF for $T_o = 68^o$

$$C_T = 0.393 + 0.559\ (T_c/T_o) + 0.048\ (T_c/T_o)^2 \qquad [37b]$$

if temperature in ^oC for $T_o = 20^o$

$$C_W = 0.708 + 0.328\ (W/W_o) - 0.036\ (W/W_o)^2 \qquad [37c]$$

for W_o = 60 miles/day, or 96.56 kilometers/day (measured at two feet above ground)

$$C_H = 1.250 - 0.348\ (H/H_o) + 0.120\ (H/H_o)^2 - 0.022\ (H/H_o)^4 \qquad [37d]$$

for mean relative humidity at noon, or average humidity for 11 and 17 hours, for H_o = 40 percent, or 0.40. When mean humidity is available, however, the following approximate relation is used:

$$C_{H_m} = 1.255 - 0.242\ (H_m/H_{m_o}) - 0.013\ (H_m/H_{m_o})^6 \qquad [37e]$$

where

TABLE 9. MEAN MONTHLY VALUES OF EXTRATERRESTRIAL RADIATION EXPRESSED AS EQUIVALENT EVAPORATION IN MILLIMETERS PER MONTH AT 20 DEGREES C.

LATITUDE DEGREES NORTH	MONTH JAN.	FEB.	MAR.	APR.	MAY	JUNE	JULY	AUG.	SEP.	OCT.	NOV.	DEC.	ANNUAL
50	121.3	166.9	286.2	390.7	499.8	528.3	526.8	447.5	327.9	221.0	134.3	104.5	3751.0
49	129.1	173.9	293.0	395.1	501.7	528.7	527.8	451.0	329.8	229.6	141.9	112.2	3812.8
48	136.9	180.9	299.8	399.5	503.6	529.0	528.8	454.3	335.5	236.1	149.5	119.9	3874.0
47	144.8	187.9	306.4	403.7	505.3	529.3	529.7	457.6	341.2	243.6	157.1	127.7	3934.5
46	152.7	194.9	313.0	407.9	507.0	529.5	530.6	460.8	346.7	251.0	164.8	135.5	3994.3
45	160.6	201.8	319.5	411.9	508.6	529.6	531.3	463.8	352.2	258.4	172.4	143.4	4053.4
44	168.5	208.7	325.9	415.8	510.0	529.6	531.9	466.8	357.5	265.6	180.0	151.3	4111.7
43	176.4	215.5	332.2	419.6	511.4	529.5	532.4	469.6	362.8	272.8	187.6	159.2	4169.1
42	184.3	222.3	338.3	423.3	512.6	529.3	532.9	472.3	367.9	280.0	195.2	167.2	4225.7
41	192.2	229.1	344.4	426.8	513.8	529.1	533.2	474.9	372.9	287.0	202.8	175.1	4281.3
40	200.1	235.8	350.4	430.2	514.8	528.7	533.4	477.3	377.8	294.0	210.4	183.1	4336.0
39	208.0	242.4	356.3	433.6	515.7	528.2	533.5	479.7	382.6	300.9	217.9	191.1	4389.8
38	215.9	249.0	362.0	436.7	516.4	527.7	533.5	481.8	387.3	307.7	225.4	199.0	4442.5
37	223.7	255.5	367.7	439.8	517.1	527.0	533.4	483.9	391.8	314.4	232.8	207.0	4494.2
36	231.5	262.0	373.2	442.7	517.6	526.2	533.1	485.9	396.3	321.1	240.3	214.9	4544.8
35	239.3	268.3	378.7	445.5	518.0	525.3	532.8	487.7	400.6	327.6	247.6	222.8	4594.3
34	247.0	274.7	384.0	448.2	518.3	524.3	532.3	489.3	404.8	334.1	255.0	230.7	4642.7
33	254.7	280.9	389.2	450.8	518.4	523.2	531.7	490.9	408.9	340.4	262.2	238.6	4689.9
32	262.4	287.1	394.3	453.2	518.5	521.9	530.9	492.3	412.8	346.7	269.5	246.4	4735.9
31	270.0	293.2	399.2	455.5	518.3	520.6	530.1	493.5	416.6	352.9	276.6	254.2	4780.8
30	277.6	299.2	404.1	457.6	518.1	519.1	529.1	494.7	420.3	359.0	283.7	262.0	4824.4
29	285.1	305.2	408.9	459.6	517.7	517.5	528.0	495.7	423.9	364.9	290.8	269.7	4866.8
28	292.6	311.0	413.4	461.5	517.2	515.8	526.7	496.5	427.3	370.8	297.8	277.3	4908.0
27	300.0	316.8	417.8	463.3	516.6	514.0	525.3	497.2	430.6	376.5	304.7	285.0	4947.8
26	307.3	322.5	422.2	464.9	515.8	512.0	523.8	497.8	433.8	382.2	311.5	292.5	4986.4
25	314.6	328.1	426.4	466.4	514.9	509.9	522.2	498.3	436.9	387.7	318.3	300.1	5023.6
24	321.8	333.6	430.5	467.7	513.8	507.7	520.4	498.6	439.8	393.1	325.0	307.5	5059.5
23	328.9	339.1	434.4	468.9	512.6	505.4	518.5	498.7	442.6	398.4	331.6	314.9	5094.1
22	335.9	344.4	438.3	470.0	511.3	502.9	516.5	498.7	445.2	403.6	338.1	322.2	5127.3
21	342.9	349.6	441.9	470.9	509.8	500.4	514.4	498.6	447.7	408.7	344.6	329.5	5159.1

Table 10. Mean Monthly Values of Extraterrestrial Radiation Expressed as Equivalent Evaporation in Inches per Month for Use with Equation (37)

Latitude Degrees	Jan	Feb	Mar	Apr	May	Jun	Jul	Aug	Sep	Oct	Nov	Dec
North												
60	1.73	3.70	8.40	13.35	18.47	20.14	19.83	15.90	10.24	5.59	2.26	1.17
55	3.11	5.10	9.87	14.39	18.98	20.29	20.14	16.74	11.54	7.14	3.67	2.47
50	4.60	6.49	11.26	15.33	19.44	20.43	20.42	17.50	12.75	8.66	5.14	3.92
45	6.15	7.87	12.58	16.17	19.81	20.53	20.64	18.15	13.86	10.13	6.65	5.45
40	7.72	9.21	13.79	16.90	20.08	20.53	20.76	18.70	14.87	11.54	8.15	7.02
35	9.27	10.50	14.91	17.50	20.23	20.44	20.76	19.12	15.77	12.86	9.63	8.59
30	10.79	11.73	15.91	17.98	20.26	20.23	20.65	19.40	16.55	14.10	11.06	10.15
25	12.26	12.87	16.79	18.33	20.16	19.91	20.41	19.56	17.20	15.24	12.43	11.67
20	13.67	13.93	17.54	18.55	19.92	19.46	20.04	19.57	17.72	16.26	13.74	13.14
15	15.00	14.89	18.16	18.63	19.55	18.89	19.55	19.45	18.11	17.17	14.95	14.53
10	16.24	15.75	18.64	18.57	19.05	18.21	18.93	19.18	18.35	17.95	16.07	15.85
5	17.37	16.49	18.98	18.37	18.42	17.41	18.18	18.78	18.46	18.60	17.09	17.07
0	18.40	17.12	19.17	18.04	17.67	16.50	17.32	18.25	18.43	19.11	17.99	18.18

Table 10. (Continued)

Latitude Degrees	Jan	Feb	Mar	Apr	May	Jun	Jul	Aug	Sep	Oct	Nov	Dec
South												
- 5	19.30	17.62	19.22	17.57	16.79	15.49	16.34	17.58	18.26	19.48	18.77	19.18
-10	20.08	18.00	19.13	16.97	15.81	14.39	15.26	16.79	17.95	19.71	19.43	20.07
-15	20.73	18.24	18.89	16.25	14.71	13.19	14.09	15.88	17.51	19.79	19.95	20.82
-20	21.24	18.36	18.50	15.41	13.53	11.93	12.83	14.86	16.93	19.72	20.34	21.45
-25	21.62	18.35	17.98	14.45	12.26	10.60	11.49	13.73	16.22	19.51	20.59	21.94
-30	21.85	18.21	17.32	13.39	10.92	9.22	10.10	12.51	15.39	19.16	20.71	22.30
-35	21.96	17.94	16.52	12.24	9.52	7.80	8.66	11.21	14.44	18.67	20.70	22.53
-40	21.94	17.55	15.61	10.99	8.07	6.38	7.19	9.83	13.38	18.04	20.57	22.63
-45	21.80	17.04	14.57	9.67	6.60	4.95	5.72	8.40	12.23	17.28	20.30	22.63
-50	21.55	16.42	13.43	8.29	5.13	3.56	4.26	6.93	10.98	16.41	19.93	22.53
-55	21.24	15.71	12.18	6.86	3.68	2.25	2.86	5.44	9.64	15.43	19.48	22.37
-60	20.89	14.93	10.84	5.40	2.29	1.07	1.56	3.96	8.24	14.35	18.98	22.21

H_{m_o} = 55%, or 0.55

For mean sunshine percentage, for S_0 = 80 percent, the sunshine coefficient is:

$$C_S = 0.542 + 0.640\,(S/S_o) - 0.499\,(S/S_0) + 0.317\,(S/S_0)^3 \qquad [37f]$$

For elevation the coefficient is:

$$C_E = 0.970 + 0.030\,(E/E_o) \qquad [37g]$$

when E_o = 1000 feet, or 305 meters

The monthly coefficient, C_M, is the mean ratio of the measured pan evaporation to the computed value. This coefficient is often omitted. Coefficients for equation [37] are given in Table 11.

Christiansen's Formulas for Potential Evapotranspiration

Three formulas have been developed using Pruitt's ryegrass lysimeter data from Davis, California.

1. Using Measured Pan Evaporation as a Base. The potential evapotranspiration, Etp, can be expressed by the equation:

$$Etp = 0.755\,E_v\,CT_2\,CW_2\,CH_2\,CS_2 \qquad [38]$$

where

E_v = measured Class A pan evaporation

$$CT_2 = 0.670 + 0.476\,(T_f/68) - 0.146\,(T_f/68)^2 \qquad [38a]$$

$$CT_2 = 0.862 + 0.179\,(T_c/20) - 0.041\,(T_c/20)^2 \qquad [38b]$$

$$CW_2 = 1.189 - 0.240\,(W/W_o) + 0.051\,(W/W_o)^2 \qquad [38c]$$

Table 11. Coefficients for Temperature, Wind, Humidity and Sunshine, for Use with Equation (37)

Mean temperature				Wind velocity at 0.6 meter				Relative humidity				Sunshine		
T_C	T_F	C_T	Log C_T	W_{MD}	W_{kh}	C_W	Log C_W	H_n	H_m	C_H	Log C_H	S	C_S	Log C_S
4	39.2	.507	-.2952	0	.00	.708	-.1500	.20	.33	1.105	.0432	.20	.676	-.1702
5	41.0	.536	-.2710	5	.34	.735	-.1337	.22	.36	1.093	.0386	.22	.687	-.1631
6	42.8	.565	-.2479	10	.67	.762	-.1182	.24	.38	1.082	.0340	.24	.698	-.1564
7	44.6	.595	-.2258	15	1.01	.788	-.1036	.26	.40	1.071	.0296	.26	.708	-.1436
8	46.4	.624	-.2046	20	1.34	.813	-.0897	.28	.43	1.060	.0253	.28	.718	-.1436
9	48.2	.654	-.1842	25	1.68	.838	-.0765	.30	.45	1.050	.0210	.30	.729	-.1376
10	50.0	.684	-.1646	30	2.01	.863	-.0640	.32	.47	1.039	.0168	.32	.738	-.1317
11	51.8	.715	-.1457	35	2.35	.887	-.0520	.34	.49	1.029	.0126	.34	.748	-.1260
12	53.6	.746	-.1274	40	2.68	.911	-.0406	.36	.51	1.020	.0084	.36	.758	-.1204
13	55.4	.777	-.1098	45	3.02	.934	-.0298	.38	.53	1.010	.0042	.38	.767	-.1150
14	57.2	.808	-.0927	50	3.35	.956	-.0194	.40	.55	1.000	.0000	.40	.777	-.1096
15	59.0	.839	-.0761	55	3.69	.978	-.0095	.42	.57	.990	-.0043	.42	.786	-.1044
16	60.8	.871	-.0600	60	4.02	1.000	-.0000	.44	.59	.980	-.0087	.44	.796	-.0992
17	62.6	.903	-.0444	65	4.36	1.021	.0091	.46	.60	.970	-.0132	.46	.805	-.0941
18	64.4	.935	-.0292	70	4.69	1.042	.0177	.48	.62	.960	-.0179	.48	.815	-.0889
19	66.2	.967	-.0144	75	5.03	1.062	.0260	.50	.64	.949	-.0228	.50	.824	-.0838
20	68.0	1.000	-.0000	80	5.37	1.081	.0340	.52	.66	.938	-.0280	.52	.834	-.0787
21	69.8	1.033	.0140	85	5.70	1.100	.0416	.54	.67	.926	-.0335	.54	.844	-.0736
22	71.6	1.066	.0277	90	6.04	1.119	.0488	.56	.69	.913	-.0393	.56	.854	-.0684
23	73.4	1.099	.0411	95	6.37	1.137	.0558	.58	.70	.900	-.0455	.58	.865	-.0632
24	75.2	1.333	.0542	100	6.71	1.155	.0625	.60	.72	.887	-.0523	.60	.875	-.0580
25	77.0	1.167	.0670	105	7.04	1.172	.0688	.62	.74	.872	-.0595	.62	.886	-.0526
26	78.8	1.201	.0795	110	7.38	1.188	.0749	.64	.75	.856	-.0674	.64	.897	-.0472
27	80.6	1.235	.0917	115	7.71	1.204	.0808	.66	.77	.839	-.0760	.66	.908	-.0417
28	82.4	1.270	.1037	120	8.05	1.220	.0864	.68	.78	.821	-.0854	.68	.920	-.0361
29	84.2	1.304	.1154	125	8.38	1.235	.0917	.70	.80	.802	-.0957	.70	.932	-.0304
30	86.0	1.339	.1269	130	8.72	1.250	.0968	.72	.81	.781	-.1071	.72	.945	-.0246
31	87.8	1.375	.1382	135	9.05	1.264	.1017	.74	.83	.759	-.1196	.74	.958	-.0187
32	89.6	1.410	.1493	140	9.39	1.277	.1063	.76	.84	.735	-.1335	.76	.971	-.0126
33	91.4	1.446	.1602	145	9.73	1.290	.1107	.78	.85	.710	-.1490	.78	.985	-.0064
34	93.2	1.482	.1709	150	10.06	1.303	.1149	.80	.87	.682	-.1662	.80	1.000	-.0000
35	95.0	1.518	.1813	155	10.40	1.315	.1190	.82	.88	.652	-.1855	.82	1.015	.0065
36	96.8	1.555	.1917	160	10.73	1.327	.1228	.84	.90	.621	-.2072	.84	1.031	.0132
37	98.6	1.591	.2018	165	11.07	1.338	.1264	.86	.91	.586	-.2318	.86	1.047	.0200
38	100.4	1.628	.2118	170	11.40	1.348	.1298	.88	.92	.550	-.2598	.88	1.064	.0270
39	102.2	1.666	.2216	175	11.74	1.358	.1330	.90	.94	.511	-.2919	.90	1.082	.0341
40	104.0	1.703	12312	180	12.07	1.368	.1361	.92	.95	.469	-.3291	.92	1.100	.0415
41	105.8	1.741	.2407	185	12.41	1.377	.1390	.94	.96	.424	-.3727	.94	1.119	.0490
42	107.6	1.779	.2501	190	12.74	1.386	.1417	.96	.97	.376	-.4247	.96	1.139	.0566
43	109.4	1.817	.2593	195	13.08	1.394	.1442	.98	.99	.325	-.4881	.98	1.160	.0644
44	111.2	1.855	.2684	200	13.41	1.401	.1465	1.00	1.00	.271	-.5676	1.00	1.181	.0724

$$C_{H_2} = 0.499 + 0.620\ (H_m/.60) - 0.119\ (H_m/.60)^2 \qquad [38d]$$

$$C_{S_2} = 0.904 + 0.008\ (S/.80) + 0.088\ (S/.80)^2 \qquad [38e]$$

where

W = mean wind velocity at two meters above ground level in miles/day, or km/hour

W_o = 100 miles/day, or 6.7 Km/hour.

Coefficients for equation [38] are given in Table 12.

2. Using Extraterrestrial Radiation as a Base. The following formula relates potential evapotranspiration to extraterrestrial radiation and other climatic factors.

$$Etp = 0.324\ R_t\ C_{TT}\ C_{WT}\ C_{HT}\ C_{ST}\ C_E \qquad [39]$$

where

$$C_{TT} = 0.174 + 0.428\ (T_f/68) + 0.398\ (T_f/68)^2, \text{ or} \qquad [39a]$$

$$C_{TT} = 0.463 + 0.425\ (T_c/20) + 0.112\ (T_c/20)^2 \qquad [39b]$$

$$C_{WT} = 0.672 + 0.406\ (W/W_o) - 0.078\ (W/W_o)^2 \qquad [39c]$$

$$C_{HT} = 1.035 + 0.240\ (H_m/.60)^2 - 0.275\ (H_m/.60)^3 \qquad [39d]$$

$$C_{ST} = 0.340 + 0.856\ (S/.80) - 0.196\ (S/.80)^2 \qquad [39e]$$

$$C_E = 0.970 + 0.030\ (E/E_o). \qquad [39f]$$

Coefficients for equations [39] and [40] are given in Table 13.

3. Using Measured Incoming Radiation as a Base. The formula is:

$$Etp = 0.492\ R_S\ C_{TT}\ C_{WT}\ C_{HT} \qquad [40]$$

where

Table 12. Coefficients for Temperature, Wind, Humidity and Sunshine, for Use with Equation (38)

Mean temperature				Wind velocity at 2 meters				Relative humidity				Sunshine		
T_C	T_F	C_{T_2}	Log C_{T_2}	W_{MD}	W_{kh}	C_{W_2}	Log C_{W_2}	H_m	H_n	C_{H_2}	Log C_{H_2}	S	C_{S_2}	Log C_{S_2}
4	39.2	.896	-.0476	0	.00	1.189	.0752	.20	.10	.692	-.1596	.20	.911	-.0402
5	41.0	.904	-.0437	10	.67	1.166	.0665	.22	.12	.710	-.1485	.22	.913	-.0396
6	42.8	.912	-.0400	20	1.34	1.143	.0581	.24	.13	.728	-.1379	.24	.914	-.0389
7	44.6	.920	-.0364	30	2.01	1.122	.0498	.26	.14	.745	-.1277	.26	.916	-.0382
8	46.4	.927	-.0329	40	2.68	1.101	.0419	.28	.16	.762	-.1178	.28	.918	-.0374
9	48.2	.934	-.0295	50	3.35	1.082	.0341	.30	.17	.779	-.1083	.30	.919	-.0365
10	50.0	.941	-.0263	60	4.02	1.063	.0267	.32	.19	.796	-.0992	.32	.921	-.0356
11	51.8	.948	-.0232	70	4.69	1.046	.0195	.34	.21	.812	-.0904	.34	.923	-.0347
12	53.6	.955	-.0202	80	5.37	1.030	.0127	.36	.22	.828	-.0819	.36	.925	-.0337
13	55.4	.961	-.0173	90	6.04	1.014	.0062	.38	.24	.844	-.0737	.38	.928	-.0326
14	57.2	.967	-.0145	100	6.71	1.000	.0000	.40	.26	.859	-.0658	.40	.930	-.0315
15	59.0	.973	-.0118	110	7.38	.987	-.0058	.42	.27	.875	-.0581	.42	.932	-.0304
16	60.8	.979	-.0092	120	8.05	.974	-.0112	.44	.29	.890	-.0508	.44	.935	-.0292
17	62.6	.985	-.0068	130	8.72	.963	-.0163	.46	.31	.904	-.0436	.46	.938	-.0279
18	64.4	.990	-.0044	140	9.39	.953	-.0209	.48	.33	.919	-.0368	.48	.940	-.0267
19	66.2	.995	-.0022	150	10.06	.944	-.0251	.50	.35	.933	-.0301	.50	.943	-.0253
20	68.0	1.000	.0000	160	10.73	.936	-.0289	.52	.37	.947	-.0237	.52	.946	-.0239
21	69.8	1.005	.0021	170	11.40	.928	-.0323	.54	.39	.961	-.0175	.54	.949	-.0225
22	71.6	1.009	.0040	180	12.07	.922	-.0352	.56	.41	.974	-.0114	.56	.953	-.0210
23	73.4	1.014	.0059	190	12.74	.917	-.0376	.58	.43	.987	-.0056	.58	.956	-.0195
24	75.2	1.018	.0076	200	13.41	.913	-.0395	.60	.46	1.000	-.0000	.60	.959	-.0180
25	77.0	1.022	.0093	210	14.08	.910	-.0410	.62	.48	1.013	.0054	.62	.963	-.0163
26	78.8	1.025	.0109	220	14.76	.908	-.0420	.64	.50	1.025	.0107	.64	.967	-.0147
27	80.6	1.029	.0124	230	15.43	.907	-.0425	.66	.53	1.037	.0158	.66	.970	-.0130
28	82.4	1.032	.0138	240	16.10	.907	-.0425	.68	55	1.049	.0207	.68	.974	-.0113
29	84.2	1.035	.0151	250	16.77	.906	-.0429	.70	.57	1.060	.0255	.70	.978	-.0095
30	86.0	1.038	.0163	260	17.44	.906	-.0429	.72	.60	1.072	.0300	.72	.982	-.0077
31	87.8	1.041	.0174	270	18.11	.906	-.0429	.74	.62	1.083	.0345	.74	.987	-.0058
32	89.6	1.043	.0185	280	18.78	.906	-.0429	.76	.65	1.093	.0388	.76	.991	-.0039
33	91.4	1.046	.0194	290	19.45	.906	-.0429	.78	.68	1.104	.0429	.78	.995	-.0020
34	93.2	1.048	.0203	300	20.12	.906	-.0429	.80	.70	1.114	.0469	.80	1.000	-.0000
35	95.0	1.050	.0211	310	20.79	.906	-.0429	.82	.73	1.124	.0508	.82	1.005	.0020
36	96.8	1.051	.0218	320	21.46	.906	-.0429	.84	.76	1.134	.0545	.84	1.009	.0041
37	98.6	1.053	.0224	330	22.13	.906	-.0429	.86	.79	1.143	.0581	.86	1.014	.0062
38	100.4	1.054	.0229	340	22.80	.906	-.0429	.88	.82	1.152	.0616	.88	1.019	.0083
39	102.2	1.055	.0233	350	23.47	.906	-.0429	.90	.85	1.161	.0649	.90	1.024	.0105
40	104.0	1.056	.0237	360	24.14	.906	-.0429	.92	.88	1.170	.0681	.92	1.030	.0127
41	105.8	1.057	.0239	370	24.82	.906	-.0429	.94	.91	1.178	.0712	.94	1.035	.0149
42	107.6	1.057	.0241	380	25.49	.906	-.0429	.96	.94	1.186	.0742	.96	1.040	.0172
43	109.4	1.057	.0242	390	26.16	.906	-.0429	.98	.97	1.194	.0771	.98	1.046	.0195
44	111.2	1.057	.0242	400	26.83	.906	-.0429	1.00	1.00	1.202	.0798	1.00	1.051	.0218

Table 13. Coefficients for Temperature, Wind, Humidity and Sunshine, for Use With Equations (3 [illegible]) and (5 [illegible])

Mean temperature				Wind velocity at 2 meters				Relative humidity				Sunshine		
T_C	T_F	C_{TT}	Log C_{TT}	W_{MD}	W_{kh}	C_{WT}	Log C_{WT}	H_m	H_n	C_{HT}	Log C_{HT}	S	C_{ST}	Log C_{ST}
4	39.2	0.552	-.2577	0	.00	.672	-.1726	.20	.10	1.051	.0218	.20	.542	-.2662
	41.0	.576	-.2394	10	.67	.712	-.1476	.22	.12	1.054	.0227	.22	.561	-.2514
6	42.8	.601	-.2214	20	1.34	.750	-.1249	.24	.13	1.056	.0236	.24	.579	-.2372
7	44.6	.625	-.2038	30	2.01	.787	-.1041	.26	.14	1.058	.0244	.26	.597	-.2237
8	46.4	.651	-.1865	40	2.68	.822	-.0852	.28	.16	1.059	.0250	.28	.616	-.2107
9	48.2	.677	-.1695	50	3.35	.855	-.0678	.30	.17	1.061	.0256	.30	.633	-.1983
10	50.0	.703	-.1527	60	4.02	.888	-.0518	.32	.19	1.062	.0259	.32	.651	-.1864
11	51.8	.731	-.1363	70	4.69	.918	-.0372	.34	.21	1.062	.0261	.34	.668	-.1750
12	53.6	.758	-.1201	80	5.37	.947	-.0237	.36	.22	1.062	.0261	.36	.686	-.1640
13	55.4	.787	-.1043	90	6.04	.974	-.0113	.38	.24	1.061	.0259	.38	.702	-.1534
14	57.2	.815	-.0886	100	6.71	1.00	.0000	.40	.26	1.060	.0254	.40	.719	-.1433
15	59.0	.845	-.0733	110	7.38	1.024	.0104	.42	.27	1.058	.0246	.42	.735	-.1335
16	60.8	.875	-.0582	120	8.05	1.047	.0199	.44	.29	1.056	.0235	.44	.752	-.1241
17	62.6	.905	-.0433	130	8.72	1.068	.0286	.46	.31	1.052	.0221	.46	.767	-.1150
18	64.4	.936	-.0286	140	9.39	1.088	.0364	.48	.33	1.048	.0203	.48	.783	-.1062
19	66.2	.968	-.0142	150	10.06	1.105	.0436	.50	.35	1.042	.0181	.50	.798	-.0978
20	68.0	1.000	-.0000	160	10.73	1.122	.0500	.52	.37	1.036	.0155	.52	.814	-.0896
21	69.8	1.033	.0140	170	11.40	1.137	.0557	.54	.39	1.029	.0124	.54	.828	-.0817
22	71.6	1.066	.0278	180	12.07	1.150	.0607	.56	.41	1.020	.0088	.56	.843	-.0741
23	73.4	1.100	.0413	190	12.74	1.162	.0651	.58	.43	1.011	.0047	.58	.858	-.0667
24	75.2	1.134	.0547	200	13.41	1.172	.0689	.60	.46	1.000	.0000	.60	.872	-.0596
25	77.0	1.169	.0679	210	14.08	1.181	.0721	.62	.48	.988	-.0053	.62	.886	-.0527
26	78.8	1.205	.0809	220	14.76	1.188	.0747	.64	.50	.974	-.0113	.64	.899	-.0461
27	80.6	1.241	.0937	230	15.43	1.193	.0767	.66	.53	.959	-.0180	.66	.913	-.0396
28	82.4	1.278	.1064	240	16.10	1.197	.0781	.68	.55	.943	-.0255	.68	.926	-.0334
29	8[illegible].2	1.315	.1188	250	16.77	1.199	.0790	.70	.57	.925	-.0339	.70	.939	-.0274
30	66.0	1.352	.1311	260	17.44	1.200	.0793	.72	.60	.905	-.0432	.72	.952	-.0215
31	87.8	1.391	.1433	270	18.11	1.200	.0790	.74	.62	.884	-.0535	.74	.964	-.0159
32	89.6	1.430	.1553	280	18.78	1.201	.0795	.76	.65	.861	-.0649	.76	.976	-.0104
33	91.4	1.469	.1671	290	19.45	1.201	.0795	.78	.68	.836	-.0776	.78	.988	-.0051
34	93.2	1.509	.1787	300	20.12	1.201	.0795	.80	.70	.810	-.0916	.80	1.000	-.0000
35	95.0	1.550	.1903	310	20.79	1.201	.0795	.82	.73	.781	-.1072	.82	1.011	.0050
36	96.8	1.591	.2016	320	21.46	1.201	.0795	.84	.76	.751	-.1245	.84	1.023	.0098
37	98.6	1.633	.2129	330	22.13	1.201	.0795	.86	.79	.718	-.1437	.86	1.034	.0144
38	100.4	1.675	.2240	340	22.80	1.201	.0795	.88	.82	.684	-.1652	.88	1.044	.0189
39	102.2	1.718	.2349	350	23.47	1.201	.0795	.90	.85	.647	-.1892	.90	1.055	.0232
40	104.0	1.761	.2458	360	24.14	1.201	.0795	.92	.88	.608	-.2162	.92	1.065	.0274
41	105.8	1.805	.2565	370	24.82	1.201	.0795	.94	.91	.567	-.2467	.94	1.075	.0315
42	107.6	1.849	.2670	380	25.49	1.201	.0795	.96	.94	.523	-.2815	.96	1.085	.0354
43	109.4	1.894	.2775	390	26.16	1.201	.0795	.98	.97	.477	-.3215	.98	1.094	.0392
44	111.2	1.940	.2878	400	26.83	1.201	.0795	1.00	1.00	.429	-.3680	1.00	1.104	.0429

R_S = measured incoming solar radiation expressed as equivalent depth of evaporation.

The equations for the coefficients C_{TT}, C_{WT}, and C_{HT} are the same as given in equations [39a], [39b], [39c], and [39d].

The measured incoming solar radiation is generally reported as langleys per day (cal/cm^2/day). The equivalent depth of evaporation per day is obtained by dividing langleys per day, R_{Ly}, by the latent heat of vaporization, L:

$$R_S = R_{Ly}/L \qquad [41]$$

where

$$L = 595.9 - 0.55\ T_c \qquad [42]$$

For temperatures in ^oF:

$$L = 595.9 - 0.305\ (T_f - 32) \qquad [43]$$

From a comparison of equations [39] and [40] developed by Christiansen to estimate potential evapotranspiration, it will be seen that:

$$R_s = 0.660\ R_t\ C_{ST}\ C_E \qquad [44]$$

Hargreaves

Hargreaves proposed the use of Class A pan evaporation as a climatic index and a basis for estimating actual evapotranspiration as early as 1948 (7). His formula developed at Utah State University for computing Class A pan evaporation, E_v, is:

$$E_v = 0.38D\ (1.0 - H_n)\ (T - 32) \qquad [45]$$

where

E_v = Class A pan evaporation in inches per month

D = monthly day time coefficient

H_n = mean monthly relative humidity at noon expressed in decimal form

T = mean monthly temperature in degrees Fahrenheit

Hargreaves' formula expressed in metric units becomes:

$$E_v = 17.4\ DT_c\ (1.0 - H_n) \qquad [46]$$

where evaporation is computed in mm, T_c in Centigrade.

Hargreaves used the above formula to compute evapotranspiration as follows:

$$ET = KE_v \qquad [47]$$

in which K is a crop factor (19). His recent formulas for computing pan evaporation and evapotranspiration used in this study are as follows:

$$EVPH = 0.430 \times RMM \times CTH \times CWH \times CHH \times CSH \times CEH \qquad [48]$$

where

$$CTH = 0.40 + 0.024 \times TM \qquad [48a]$$

$$CWH = 0.68 + 0.04 \times W10 \qquad [48b]$$

$$CHH = 0.05 + 1.58\ (1.0 - HM)^{0.5} \qquad [48c]$$

$$CSH = 0.70 + 0.83 \times S \qquad [48d]$$

$$CEH = 1.00 + 0.04 \times EL/1000 \qquad [48e]$$

where

EVPH = Class A pan evaporation in mm/month

CTH, CWH, CHH, CSH, CEH are the coefficients for temperature, wind, humidity, sunshine, and elevation, respectively. In this formula if the coefficient for sunshine becomes greater than 1.00 it will be used as 1.00 in the computations.

$$ETPH = 0.82 \times EVP \times CHTV \times CWTV \quad [49]$$

where

ETPH = potential evapotranspiration

$$CHTV = 0.55 + 0.75 \times HM \quad [49a]$$

$$CWTV = 1.08 - 0.01 \times W10 \quad [49b]$$

CHTV and CWTV are the coefficients for humidity and wind, respectively and in cases where CHTV becomes greater than 1.03 it will be used as 1.03 in the computations.

PROCEDURE

The following steps were taken during the course of this study to meet the objectives stated in the introduction.

1. Data collection.

2. Estimating additional data.

3. Modifying Christiansen's formulas for estimating Class A pan evaporation and potential evapotranspiration.

4. Comparing formulas.

5. Computing crop factors.

6. Estimating actual evapotranspiration of some crops at Marvdasht Pilot Project.

Data Collection

Climatological data were obtained from the Soil Institute of Iran. These data have been processed by Mr. P. J. Slabbers from meteorological yearbooks and monthly weather bulletins (40), and consist of the following:

1. Wind speed, in meters per second at two-meter level.

2. Mean monthly temperature, in ^{o}C.

3. Mean monthly relative humidity, expressed decimally.

4. Relative duration of sunshine (n/N), expressed decimally, where n = actual hours of sunshine and N = maximum hours of sunshine. Figure 5 shows the relation between relative duration of sunshine (n/N) and degree of cloudiness, md (OKTAS) in Iran (40).

5. Monthly precipitation, in millimeters.

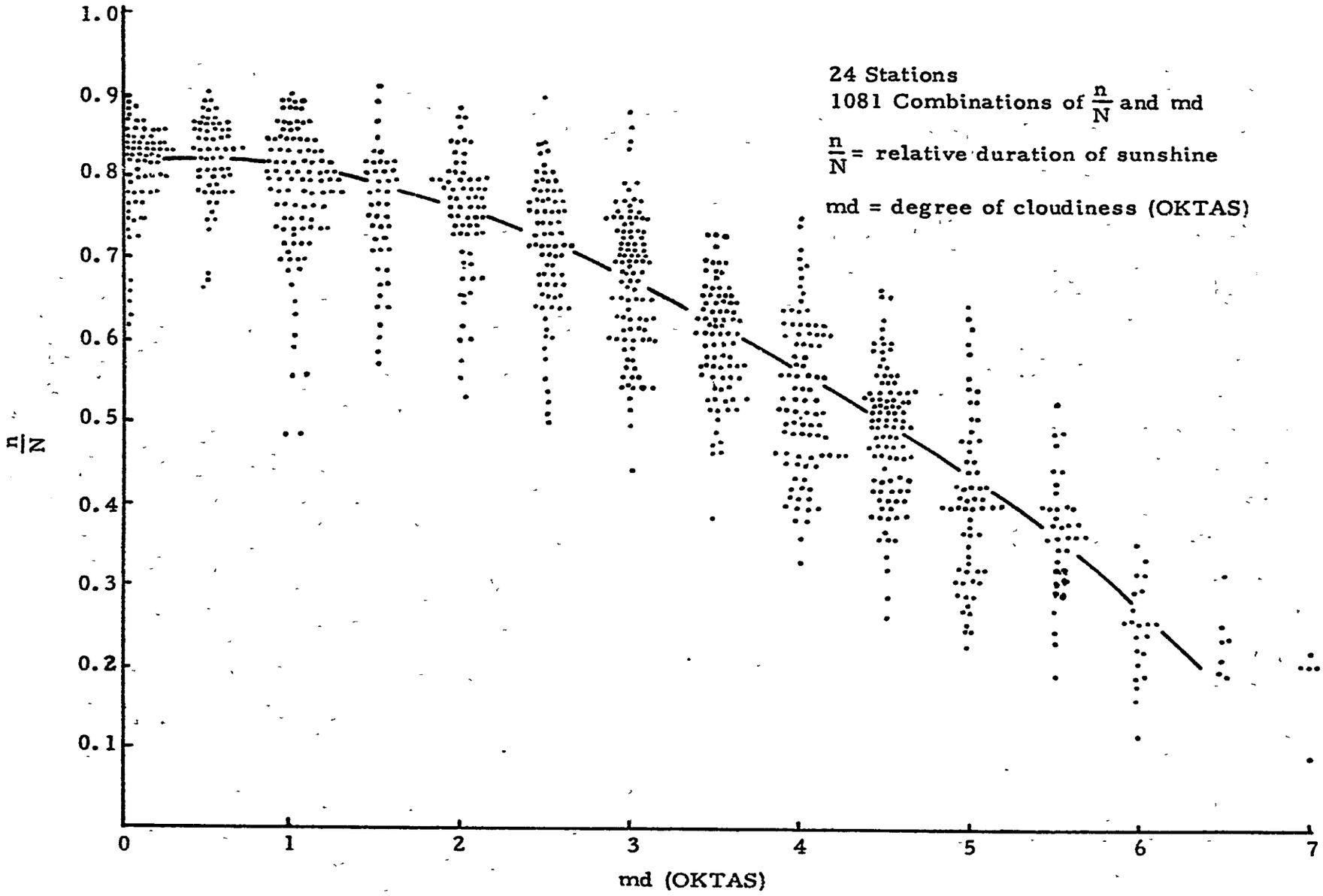

Figure 5. Relation Between Hours of Sunshine and Degree of Cloudiness in Iran

Measured Class A Pan Evaporation. Data were obtained from a publication by the Iranian Ministry of Water and Power (25). In the case of the Marvdasht Pilot Project, the data were collected by the Soil Institute.

Evapotranspiration data measured by lysimeter and field plot experiments for various crops were collected by the writer while working at the Marvdasht Pilot Project. Table 14 gives these values.

Estimating Additional Data

Theoretical Radiation, RMD. Theoretical radiation, RMD, expressed as evaporation in mm/day, was calculated from the equation:

$$RMD = 10\ RLD/(595.9 - 0.55\ TM) \qquad [50]$$

in which

TM = mean temperature in ^{o}C

(595.9 - 0.55 TM) = heat of vaporization, cal/gm at TM ^{o}C

RMD = theoretical radiation expressed as evaporation in mm/day, received at the top of the atmosphere or a unit horizontal area for an average day in the month

RLD = theoretical extra atmospheric radiation in langleys per day (cal/cm^2/day), and is computed by

$$RLD = 120\ (DL \sin (XLA/57.2958) \sin (DER) + 7.6394 \cos (XLA/57.2958) \cos (DER) \sin (OM))/ES \qquad [51]$$

where

$$DL = OM/0.1309 \qquad [51a]$$

DL = daylength in hours (theoretical sunshine)

Table 14. Evapotranspiration Values Measured by Lysimeter and Field Plot Studies at Marvdasht Pilot Project (mm/day)

Month	Alfalfa Sampling	Sunflower Sampling	Sugar Beets Sampling	Mexican Wheat Lysimeter	Roshan Wheat	Barley Lysimeter	Grass Lysimeter	Alfalfa Lysimeter	Sunflower Sampling	Cotton Lysimeter
Dec 67	-	-	-	-	0.5					
Jan 68	-	-	-	-	0.5					
Feb	-	-	-	-	0.8					
Mar	1.3	-	1.3	-	1.6					
Apr	2.2	2.1	2.4	-	4.6					
May	7.7	3.6	5.6	-	5.5					
Jun	10.0	9.9	10.0	-	3.8					
Jul	10.5	11.2	11.0	-	-					
Aug	10.0	4.1	10.0	-	-					
Sep	8.3	-	9.2	-	-					
Oct	4.9	-	6.7	-	-					
Nov	2.7	-	3.3	2.5	-	2.0				
Dec	-	-	-	1.5	-	1.4				
Jan 69				1.1	-	1.2	-	-	-	
Feb				1.7	-	1.6	-	-	-	
Mar				5.0	-	6.0	3.0	-	-	
Apr				9.2	-	8.7	3.5	3.6	2.0	
May				10.0	-	5.6	4.5	5.0	3.5	8.3
Jun				4.6	-	-	5.3	8.8	10.9	15.0
Jul				-	-	-	5.0	10.2	13.7	7.3
Aug					-	-	5.6	9.8	5.4	21.4
Sep					-	-	5.2	8.9	-	18.7
Oct					-	-	6.0	5.4	-	14.0
Nov					-	-	-	-	-	-
Dec							-	-	-	-

$$OM = \text{arc tan } (1 - Z^2/|Z|) \quad [51b]$$

XLA = latitude of the station in degrees

DER - monthly declination of the sun in radians

$$DER = DEC/57.2958 \quad [51c]$$

DEC = monthly declination of the sun in degrees

OM = an angle as used in radiation equation in radians

$$Z = - \tan (XLA/57.2958) \tan (DER) \quad [51d]$$

ES = square of the monthly relative values of the distance from the earth to the sun, dimensionless.

Theoretical Radiation, RMM. Theoretical radiation, RMM, expressed as evaporation, in mm/month, was computed by:

$$RMM = RMD \times DM \quad [52]$$

where

DM = number of days/month.

Modification of Christiansen's Formula

One of Christiansen's formulas for estimating pan evaporation, developed from Venezuelan climatic data, was selected as a base and it was modified to fit better the Iranian data. This formula was given to the writer by Professor Christiansen in the following form:*

$$EVVE = XVCV \times RMM \times CTVV \times CHVV \times CWVV \times CS \times CE \quad [53]$$

where

$$XVCV = 0.43$$

$$CTVV = 0.40 + 0.50 (TM/25) + 0.1 (TM/25)^2 \quad [53a]$$

*Personal communication.

$$CHVV = 1.15 + 0.44\ (HM/0.75) - 0.59\ (HM/0.75)^2 \qquad [53b]$$

$$CWVV = 0.58 + 0.47\ (W_2K/4.5) - 0.05\ (W_2K/4.5)^2 \qquad [53c]$$

$$CS = 0.38 + 0.78\ (S/.5) - 0.16\ (S/.5)^2 \qquad [53d]$$

$$CE = 0.94 + 0.06\ (EL/1000) \qquad [53e]$$

XVCV, CTVV, CHVV, CWVV, CS, and CE are the constant and coefficients for temperature, humidity, wind, sunshine, and elevation coefficients, respectively, as used in the Venezuelan formula.

Computer program K_1 (Table 15) was written to compute the ratio of measured Class A pan evaporation to the computed evaporation. This was done with the data for each month. The average of these ratios was computed for each month of the year. The overall average for the stations was also computed. Formula [37] (page 58) of Christiansen and formula [48] (page 68) of Hargreaves also was used in this program for comparison purposes. The Venezuelan formula, however, was modified to better fit the data.

These computed ratios of EVPM/EVPK were then plotted against the climatic parameters of the stations, and then the new coefficients for parameters were developed by drawing the best fit curve and writing the equation of the curves. The procedure used for finding the coefficients of a parabolic equation as previously used by A. H. Al-Barrak (2) is given in Appendix D.

Six stations (Table 16) with a total of 132 months of data were used in this study. Unfortunately, the limitation of pan evaporation data was

Table 15. Computer Programs Used in the Study and Given in Appendix B

Program No.	Purpose
K_1	To compute Class A pan evaporation for Iran using the modified formula and to compare values with formulas [37] and [48].
K_2	To compute Blaney-Criddle's K factor.
K_3	Comparison of formulas used to compute Class A pan evaporation.
K_4	To compute the ratios of measured potential evapotranspiration to measured pan evaporation and to computed evapotranspiration.
K_5	To compute mean monthly values of extraterrestrial radiation expressed as equivalent evaporation in mm/month at 20°C.
K_6	To compute monthly values of Etp by Penman and Blaney-Criddle formulas.
K_7	To compute Etp by Christiansen, Hargreaves, and Khosravi formulas.
K_8	To compare the Etp values obtained in program K_7 with those computed by program K_6.
K_9	To compute coefficients for computing pan evaporation and potential evapotranspiration from Khosravi's formulas for Iran.

a weak point in the modification process. Description of the codes used for these stations are given in Table 17.

Computer symbols used in all of the programs are listed in Table 27 and are given in Appendix A.

Comparison of Evaporation Formulas

The new modified formula was compared with Christiansen's formula [37] (page 58) and Hargreaves formula [48] (page 68) by using computer program K_1 as mentioned before. Computer program K_3 was used to compare the ratios of measured Class A pan evaporation at each station with the evaporation values for the same stations already computed by Slabbers using Blaney-Criddle, formula [64], and modified Penman, formula [62], in Iran (40). Computer program K_2 was used for determination of mean monthly Blaney-Criddle's K factor, and Table 18 gives these values for the five stations used in program K_3. To make the study and comparison clear it is appropriate to explain in this thesis the procedure used by Slabbers.

Procedure Used by Slabbers. Slabbers used a modified Penman formula developed by Rijtema in Holland (38). Rijtema in 1965 developed a general applicable method for the calculation of the relation between the evaporation from a free water surface, E_o, and the potential evapotranspiration from a crop, E. The formula for free water surface evaporation is:

$$E_o = \frac{\Delta}{\Delta + \gamma} \left\{ (1 - \Gamma_w) H_{s_h} - H_1 \right\} / L + \frac{\gamma}{\Delta + \gamma} \left\{ 0.28\ U\ (e_s - e_a) \right\} \qquad [54]$$

The formula for potential evapotranspiration is:

Table 16. Stations Used for Developing an Evaporation Formula for Iran

No.	Code No.	Name	Lat. in Degrees	Long. in Degrees	Elev. Meters	Years of Data
1	111	Gonbadghabus	37.25	55.17	36	2
2	400	Marvdasht	29.87	52.80	1500	4
3	416	Ahwaz	31.33	48.67	20	2
4	506	Esfahan	32.57	51.50	1610	2
5	508	Shahrood	36.42	54.97	1340	2
6	608	Yazd	31.90	54.42	1233	2

Table 17. Description of Station Codes

Code Number	Zone Name	Description
0-100	Caspian	Lower forest belt - up to approximately 800 meters
100-200	Caspian	Middle and upper forest belts - from 800 to 2700 meter
200-300	Baluchi	Subtropical arid climate
300-400	Sub-desertic	Less than 100 mm annual precipitation
400-500	Steppic	From 100 to 200/230 mm precipitation
500-600	Sub-steppic	From 200/230 to 380/420 mm precipitation
600-700	Xerophilous Forest	More than 380/420 mm precipitation
700-800	Highest Mountain	Above 2700 meters altitude

TABLE 18. COMPUTATION OF BLANEY-CRIDDLE K VALUES

	NYRS	JAN	FEB	MAR	APR	MAY	JUN	JUL	AUG	SEP	OCT	NOV	DEC
STATION	416.	NAME	AHWAZ			LAT.	31 20.		LONG.	48 40.	ELEV.	20.	ANN. HT. 2
B-C F	2	102.3	92.4	142.6	168.0	213.9	234.0	248.0	232.5	186.0	164.3	120.0	105.4
B-C K		.000	.000	.983	1.335	1.850	2.289	2.080	2.163	2.227	1.650	1.159	.987
STATION	400.	NAME	MARVDASHT			LAT.	29 52.		LONG.	52 48.	ELEV.	1500.	ANN. HT. 2
B-C F	4	77.5	72.8	111.6	129.0	164.3	186.0	207.7	195.3	162.0	142.6	96.0	83.7
B-C K		.520	1.096	1.108	1.296	1.651	1.762	1.720	1.627	1.582	1.407	1.087	.753
STATION	506.	NAME	SHAHROOD			LAT.	35 25.		LONG.	54 58.	ELEV.	1340.	ANN. HT. 2
B-C F	1	65.1	67.2	105.4	129.0	173.6	186.0	204.6	189.1	150.0	120.9	81.0	68.2
B-C K		.690	.000	1.010	1.312	1.364	1.781	2.025	2.192	2.141	1.543	1.191	.000
STATION	608.	NAME	YAZD			LAT.	31 54.		LONG.	54 25.	ELEV.	1237.	ANN. HT. 2
B-C F	2	80.6	78.4	124.0	187.0	189.1	207.0	226.3	204.6	162.0	136.4	90.0	77.5
B-C K		.000	.000	.000	1.133	1.241	1.651	1.804	1.839	1.555	.977	1.058	.623
STATION	506.	NAME	ESFAHAN			LAT.	32 34.		LONG.	51 30.	ELEV.	1610.	ANN. HT. 2
B-C F	2	71.3	72.8	111.6	129.0	173.6	189.0	213.9	195.3	156.0	127.1	87.0	71.3
B-C K		.795	.000	1.493	1.393	1.310	1.437	1.422	1.496	1.659	1.495	1.095	.972
AVG K		.668	1.096	1.148	1.294	1.483	1.784	1.810	1.843	1.914	1.415	1.117	.834

$$E = \frac{\Delta}{\Delta + \gamma} \left\{ (1 - \Gamma_c) H_{s_h} - H_l \right\} / L + \frac{\gamma}{\Delta + \gamma} \left\{ F(Z_o, d) U (e_s - e_a) \right\} \qquad [55]$$

where

Δ = slope of the vapor pressure temperature curve, mm Hg/^oC

γ = psychrometer constant, mm Hg/^oC

Γ_w = reflection from water surface, hundreths

H_{s_h} = shortwave radiation, cal/cm/day

H_l = longwave radiation, cal/cm^{2}day

L = latent heat of vaporization, 10^{-1} cal cm^{-3}

U = wind speed at 2 meters, m/sec

e_s = saturated vapor pressure at temperature at 2 meters above ground, mm Hg

e_a = actual vapor pressure at two meters above ground, mm Hg

Γ_c = apparent diffusion resistance of the crop, mm Hg/day/mm

$F(Z_o, d)$ = roughness function, mm H_2O/day/m sec.

Solving equation [55] for H_l and substituting this value in equation [54] yields the following expression:

$$E = E_o - 0.20 \frac{\Delta}{\Delta + \gamma} H_{s_h} / L + \frac{\gamma}{\Delta + \gamma} \left\{ F(Z_o, d) - 0.28 \right\} U (e_s - e_a) \qquad [56]$$

Taking into consideration that potential evapotranspiration is related to free water surface evaporation by:

$$E = F \times E_o \qquad [57]$$

and comparing equations [56] and [57], it appears that the value of

the crop factor (F) depends on the correlation between E_o and both $\frac{\Delta}{\Delta + \gamma} H_{s_h}/L$ and $\frac{\gamma}{\Delta + \gamma} (e_s - e_a) U$. Rijtema in 1965 and 1968, and Slabbers in 1969 found a close relation between these factors for a variety of climates. The equations can be written as:

$$0.20 \frac{\Delta}{\Delta + \gamma} H_{s_h}/L = a E_o + b \qquad [58]$$

$$\frac{\gamma}{\Delta + \gamma} U (e_s - e_a) = c E_o + d \qquad [59]$$

Substitution of both equations in equation [56] gives the following expression for the relation between E and E_o:

$$E = [1 - a + c\{F(Z_o, d) - 0.28\}] E_o + d\{F(Z_o, d) - 0.28\} - b. \qquad [60]$$

An aerodynamically sound expression for the wind function above a surface reads as $F(Z_o, d)$ U. Rijtema in 1965 assumed that the combined effects of wind and crop length on surface roughness can be expressed as:

$$F(Z_o, d) = g(l) \cdot h(U) \qquad [61]$$

where g(l) is a function of crop length with the same dimensions as $F(Z_o, d)$, and h(u) is a dimensionless factor which depends on the windspeed. In the surface roughness expression, Z_o is the roughness length of the evaporating surface, and d is the zero-plane displacement, both in centimeters. An analysis of lysimeter data for grass resulted in the following values of g(l) in relation to crop length and values of h(U) in relation to wind speed at the two-meter height (Table 19).

These relations were tested by Slabbers in 1969 on experimental data of potential water use of crops for different climatological areas. By

Table 19. Values of g(l) in Relation to Crop Length and Values of h(U) in Relation to Wind Speed at Two-meter Height

Crop Length, cm	0.00	2.00	5.00	10.0	20.0	30.0	40.0	50.0	70.0	90.0
g(l)	0.18	0.23	0.47	0.74	1.00	1.12	1.22	1.32	1.42	1.50
Wind Speed, m/sec	0.50	1.00	1.50	2.00	2.50	3.00	4.00	5.00		
h(U)	1.32	1.17	1.05	0.96	0.90	0.86	0.79	0.75		

using potential water use data determined by soil moisture and lysimeter studies in Iran (Marvdasht Pilot Project and Ghazvin), Lebanon, Tunisia, and the Netherlands, values of $F(Z_o, d)$ were calculated as a rest-term in Penman's equation. Full agreement in all cases was obtained with the values in Table 19, using data on sugarbeets, sunflowers, wheat, alfalfa, grass, maize and potatoes. Figure 6 gives the relation between crop length and roughness function (39).

Slabbers, in his study, first calculated the values of E_o and E by using the following formulas:

$$E_o = \frac{\Delta}{(\Delta + \gamma)\, 0.1\, L} \left\{ 0.95\, (0.25 + 0.54\, n/N)\, Q_n - 118.10^{-9}\, (273 + t)^4 \right.$$
$$\left. (0.56 - 0.092\, \sqrt{e_a})\, (0.10 + 0.90\, n/N) \right\} + \frac{\gamma}{\Delta + \gamma}\, (0.50 + 0.54\, U)$$
$$0.35\, (e_s - e_a) \qquad [62]$$

and

$$E = \frac{\Delta}{(\Delta + \gamma)\, 0.1\, L} \left\{ 0.75\, (0.25 + 0.54\, n/N)\, Q_n - 118.10^{-9}\, (273 + t)^4 \right.$$
$$\left. (0.56 - 0.092\, \sqrt{e_a})\, (0.10 + 0.90\, n/N) \right\} + \frac{\gamma}{\Delta + \gamma}\, (1.0 + 0.54U)$$
$$0.35\, (e_s - e_a) \qquad [63]$$

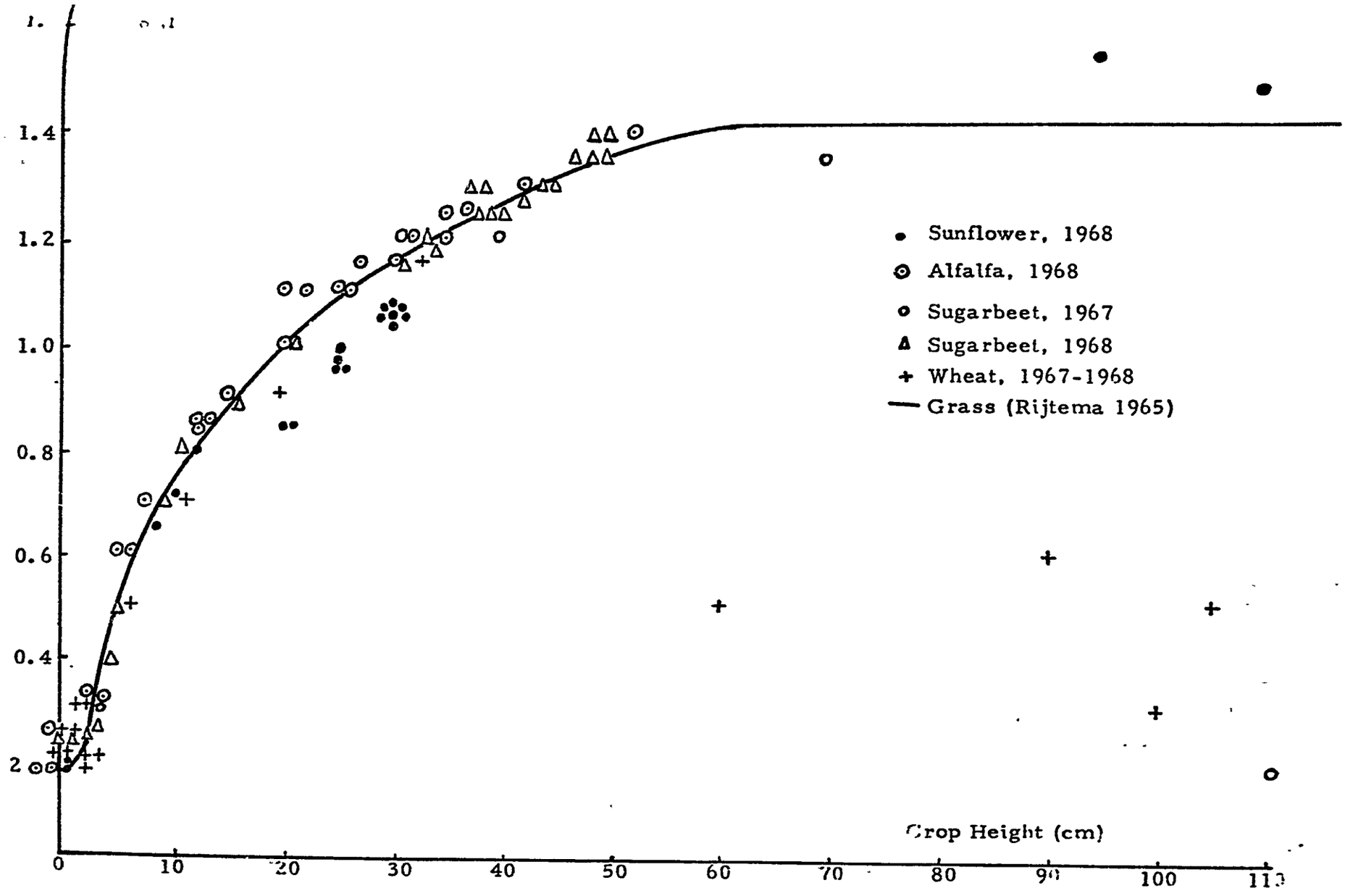

Figure 6. Relation Between Crop Length and Roughness Function

Then he calculated average monthly values of E_o, the meteorological factors, and the values of the factors a, b, c, and d in equations [58] and [59] for 49 synoptical stations in Iran. He used a program written for an IBM 360 computer. In the same program he also computed monthly consumptive use factors with the Blaney-Criddle formula:

$$F = P\,(0.46\,t + 8.13)/30.4 \qquad [64]$$

where

F = consumptive use in mm/day

P = monthly percentage daylight hours of the year

t = air temperature in ^{o}C at two meters above the ground surface.

Computing Crop Factors

Data of consumptive use experiments carried out at Marvdasht Pilot Project in Fars Province were used together with evaporation pan data from the same station to compute the ratio of potential evapotranspiration values, ETP, measured for various crops by lysimeters and field plot studies to measured pan evaporation, EVPM. Two types of simple lysimeters were used, the drum type for alfalfa and grass (Figure 7), and the square type for row crops (Figure 8). These drainage lysimeters were placed in the irrigated field grown to the same crop and care was taken to make the conditions of outside and inside the lysimeters uniform. The moisture content was always

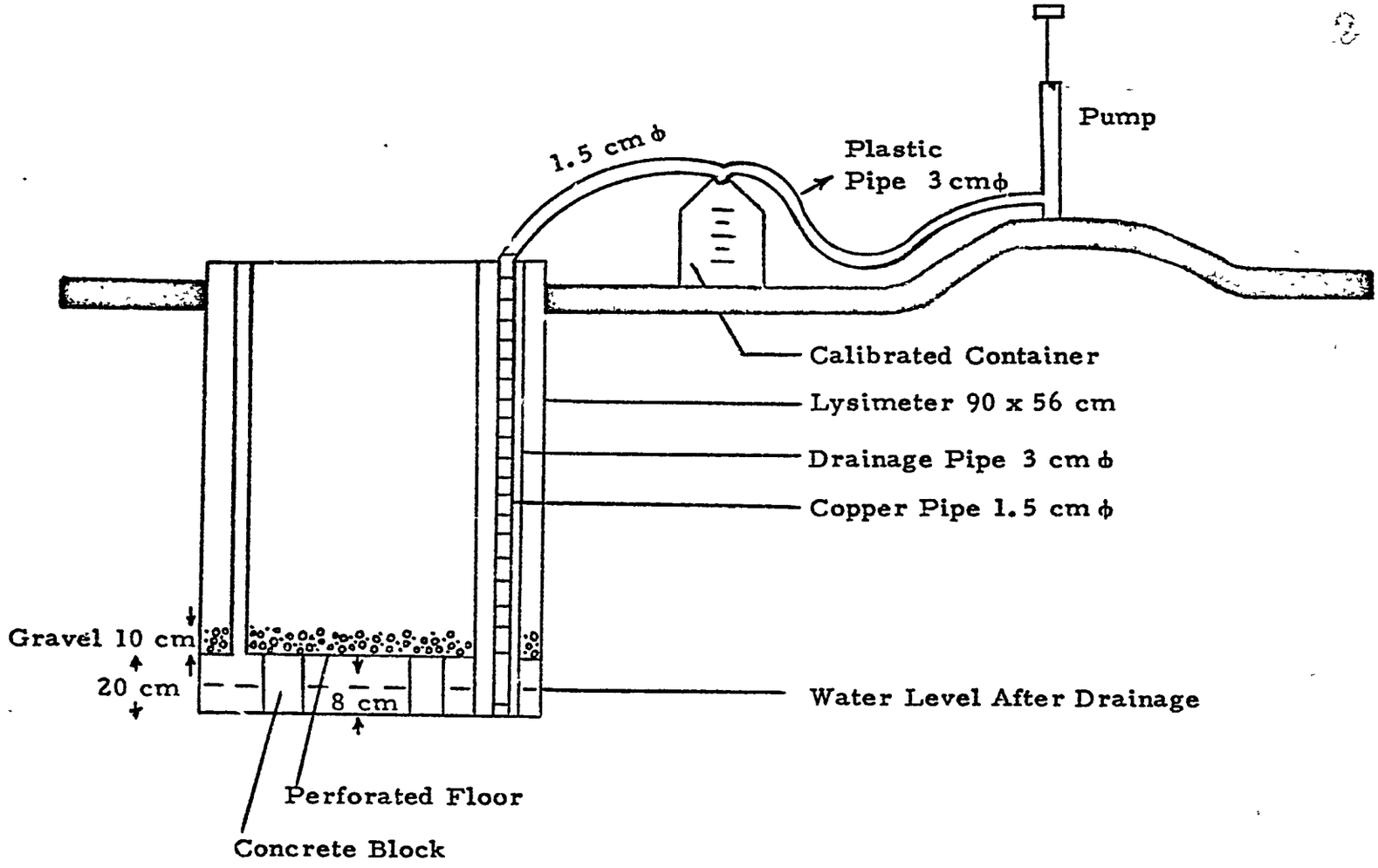

Figure 7. Oil Drum Type Lysimeter Used at Marvdasht Pilot Project

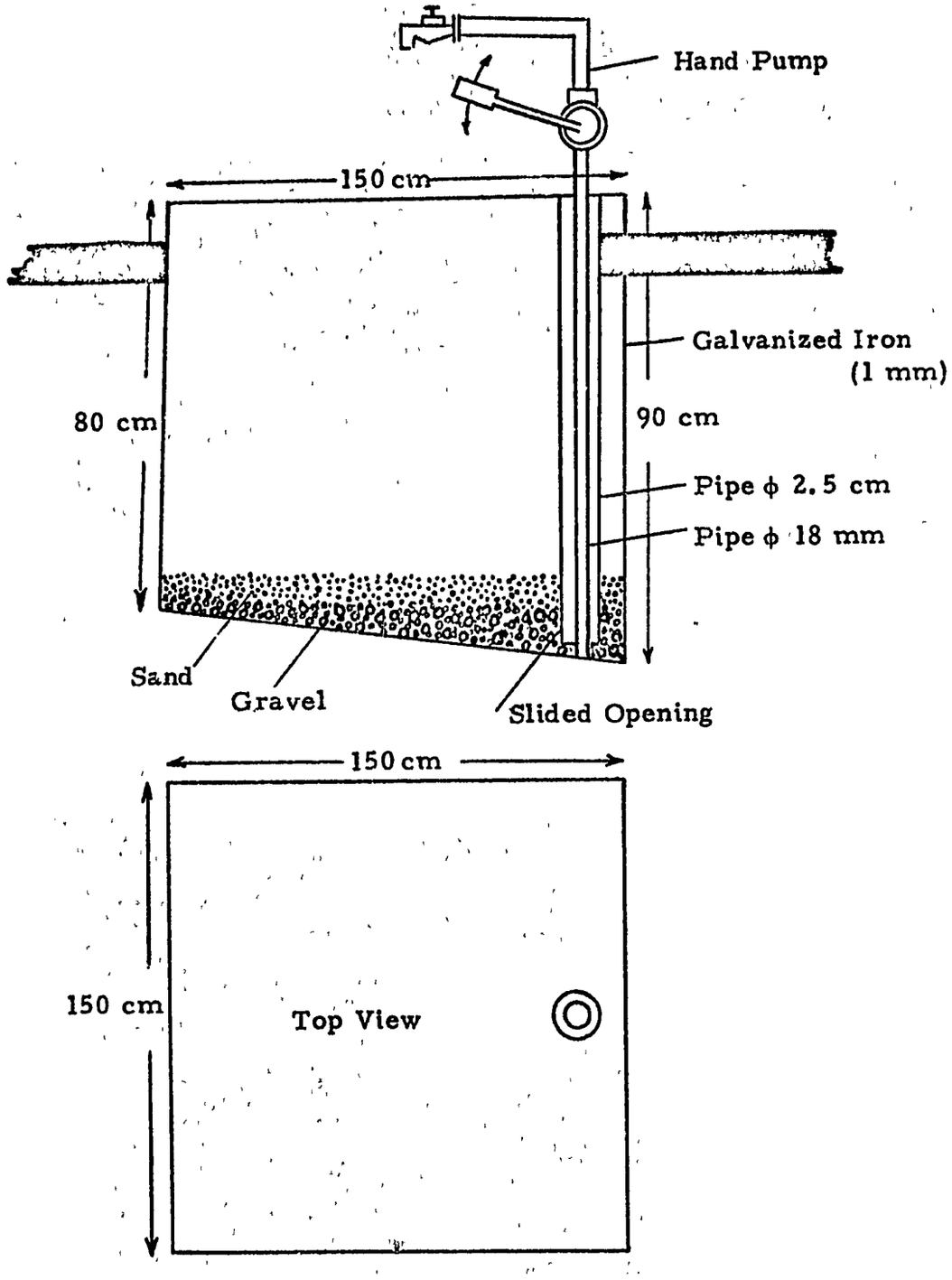

Figure 8. Lysimeter Used for Row Crops at Marvdasht Pilot Project

kept at optimum level, so it was not a limiting factor during the growing season.

Field studies were also conducted in 100 m^2 plots. Irrigation scheduling and determination of water use data was based on soil sampling at 15, 45 and 75 cm depths. At planting and harvest, soil samples were taken up to 135 cm. Water application was regulated by using 3-inch Parshall flumes, one for each replication and based on tables showing the duration of irrigation per plot, depending on depth of the root zone, soil moisture content at irrigation and head of water in the Parshall flume. The moisture tension curve of the soil, classified as clay-loam, was determined by pressure-plate and pressure-membrane apparatus. Values of field capacity were determined separately by soil sampling two days after irrigation, and were found to be 19.4 and 17.8 (percent moisture by weight) for depths of 15 and 45 cm, respectively. Values of permanent wilting point, as determined by sunflower tests, were found to be 10, 10.4 and 13.5 for depths of 15, 45 and 75 cm, respectively. Bulk density was determined to be 1.7 gm/cm^3. Moisture regimes applied were based on values initially selected and plots were irrigated at different soil moisture deficits. Fertilizer was applied at at optimum recommended rate. The water use data collected for various crops from lysimeter and field plot studies was given before in Table 14.

Computer program K_4 (Table 15) was developed to compute the ratios of potential evapotranspiration values measured experimentally;

to measured pan evaporation, EVPM, as explained before. The same program also computed the ratio of evapotranspiration measured by lysimeters and field plot studies to that computed by the formula [65]. The data from plots kept at potential condition is used in this program.

Comparison of Etp Formulas

For the purpose of this comparison, the average daily values of F for the Blaney-Criddle formula, equation [64], and the average daily values of E for the modified Penman formula, equation [63] as computed by Slabbers (40), were used. Program K_6 was used to convert the daily values to monthly values, and the computed F and average monthly K values to potential evapotranspiration values. The average monthly K values for potential evapotranspiration were taken as 80 percent of the previously computed K values for pan evaporation (program K_2). The mean monthly values of ETPP (modified Penman), and ETBC (Blaney-Criddle) are given in Table 20 for the 24 stations in Iran. Table 21 gives the description of the stations and the number of years of data used in this study. The geographical location of these stations is shown in Figure 9.

Computer program K_7 (Table 15) was used to compute potential evapotranspiration by Christiansen's formula [39], Hargreaves' formula [49], using EVPK as the base. Christiansen's formula for Etp, using pan evaporation as the base, equation [38], was modified by the writer

TABLE 20. MEAN MONTHLY VALUES OF ETPP AND ETBC

	NST	JAN	FEB	MAR	APR	MAY	JUN	JUL	AUG	SEP	OCT	NOV	DEC
ETPP	1	27.9	39.2	65.1	96.0	148.8	171.0	192.9	163.3	123.0	77.5	42.0	24.8
ETBC	1	46.4	68.7	105.3	139.8	217.0	279.3	336.7	292.5	243.5	150.9	85.8	57.9
ETPP	3	18.6	30.8	49.6	75.0	120.9	138.0	148.8	130.2	84.0	52.7	30.0	18.6
ETBC	3	43.1	63.8	96.9	130.4	202.3	256.9	314.2	274.2	229.7	143.9	83.1	55.8
ETPP	7	21.7	33.6	55.8	81.0	127.1	147.0	151.2	139.5	102.0	65.1	33.0	18.6
ETBC	7	51.4	66.3	99.6	133.5	206.0	265.5	327.7	283.9	238.9	147.4	85.8	57.9
ETPP	8	21.7	30.8	46.5	66.0	111.6	129.0	148.8	127.1	97.0	58.9	33.0	21.7
ETBC	8	44.7	66.3	96.8	127.3	198.6	256.9	314.2	279.8	229.7	147.4	85.8	57.9
ETPP	103	27.9	50.4	86.8	123.0	179.8	210.0	220.1	204.6	150.0	99.2	54.0	31.0
ETBC	103	36.4	61.4	99.6	136.0	217.0	282.6	318.7	301.7	248.1	147.4	77.7	49.6
ETPP	104	21.7	33.6	62.0	96.0	155.0	189.0	234.6	179.8	126.0	74.4	36.0	18.6
ETBC	104	34.8	56.5	94.0	130.4	202.3	261.2	296.3	274.2	215.9	129.8	69.7	43.4
ETPP	108	24.8	42.0	74.4	108.0	151.9	185.0	231.5	192.9	135.0	66.8	39.0	19.6
ETBC	108	38.1	56.5	94.0	130.4	194.9	256.9	291.8	278.8	225.1	136.9	72.4	45.5
ETPP	201	18.6	28.0	55.8	87.0	136.4	169.0	189.1	170.5	120.0	71.3	30.0	15.5
ETBC	201	29.8	49.1	82.6	114.9	183.9	249.1	339.7	265.1	215.9	126.3	67.0	41.4
ETPP	202	15.5	25.2	55.8	87.0	136.4	174.0	231.5	179.8	126.0	68.2	30.0	15.5
ETBC	202	28.2	44.2	82.6	118.0	191.2	256.9	330.7	283.4	225.1	129.8	67.0	41.4
ETPP	203	15.5	25.2	58.9	93.0	139.5	171.0	192.2	175.7	123.0	68.2	30.0	15.5
ETBC	203	29.8	46.6	85.4	121.1	191.2	252.6	231.8	274.2	220.5	129.8	69.7	43.4
ETPP	214	12.4	28.0	55.8	78.0	133.3	169.0	186.0	167.4	108.0	62.0	27.0	12.4
ETBC	214	29.8	51.6	88.3	121.1	194.9	252.6	231.8	278.8	220.5	129.8	69.7	41.4
ETPP	303	18.6	33.6	65.1	87.0	139.5	174.0	192.2	192.9	126.0	77.5	36.0	18.6
ETBC	303	29.9	49.1	85.4	114.9	180.2	239.8	282.8	269.7	211.3	126.3	67.0	39.3
ETPP	305	24.9	36.4	68.2	96.0	145.7	185.0	237.7	192.2	141.0	89.9	42.0	21.7
ETBC	305	34.8	56.5	91.1	121.1	197.6	252.6	330.7	283.4	225.1	140.4	75.1	47.6
ETPP	314	21.7	33.6	65.1	96.0	145.7	189.0	237.7	185.0	138.0	83.7	42.0	18.6
ETBC	314	31.5	51.6	88.3	124.2	224.3	256.9	335.2	283.4	229.7	136.9	75.1	43.4
ETPP	400	34.1	47.6	80.6	108.0	155.0	195.0	213.9	199.4	153.0	111.6	54.0	37.2
ETBC	400	41.4	63.8	102.5	133.5	194.9	265.5	330.7	288.0	248.1	161.4	85.8	55.8
ETPP	401	40.3	56.0	89.9	120.0	173.6	198.0	234.6	195.3	150.0	111.6	60.0	37.2
ETBC	401	43.1	68.7	105.3	133.5	206.0	269.7	330.7	298.0	229.7	150.9	83.1	55.8
ETPP	509	24.8	50.4	93.0	123.0	170.5	192.0	229.4	210.8	139.0	99.2	45.0	24.8
ETBC	509	34.8	83.5	102.5	142.9	220.7	269.7	323.2	305.2	261.8	140.4	72.4	45.5
ETPP	518	31.0	44.8	83.7	105.0	164.3	195.0	210.8	183.1	144.0	89.9	45.0	24.8
ETBC	518	39.9	61.4	99.6	136.0	213.3	274.0	314.2	292.5	243.5	147.4	77.7	49.6
ETPP	604	37.2	53.2	96.1	126.0	176.7	207.0	213.9	195.3	141.0	108.5	57.0	34.1
ETBC	604	41.4	66.3	108.2	142.9	213.3	274.0	335.2	283.4	234.3	147.4	80.4	51.7
ETPP	605	49.6	70.0	111.6	144.0	186.0	207.0	210.8	195.3	153.0	114.7	69.0	49.6
ETBC	605	44.7	73.7	119.6	149.1	217.0	274.0	330.7	278.8	229.7	150.9	85.8	55.8
ETPP	606	55.8	78.4	124.0	153.0	201.5	222.0	229.4	210.9	158.0	136.4	75.0	55.8
ETBC	606	51.4	83.5	131.0	161.5	239.1	259.7	323.2	305.2	261.8	175.5	99.2	68.2
ETPP	607	43.4	61.6	99.2	129.0	167.4	195.0	234.6	185.0	141.0	105.4	60.0	43.3
ETBC	607	39.8	66.3	105.3	130.6	202.3	261.2	291.8	269.7	225.1	140.4	75.1	49.6
ETPP	701	52.7	67.2	114.7	147.0	201.5	222.0	235.6	223.2	177.0	133.3	78.0	52.7
ETBC	701	58.0	88.4	131.8	167.7	242.7	299.7	332.2	319.9	275.6	185.0	112.6	76.5
ETPP	702	71.3	86.8	130.2	164.0	217.0	237.0	238.7	223.2	192.0	158.1	99.0	71.3
ETBC	702	67.9	100.7	140.0	177.3	253.8	309.3	336.7	329.1	294.0	203.5	126.0	84.8

Table 21. Stations Used for Comparison of Etp Formulas

No.	Code No.	Name	Lat. in Degrees	Long. in Degrees	Elev. Meters	Years of Data	Period	Synoptic Station
1	7	Babolsar	36°43'N	52°39'E	21	11	1956-1966	*
2	606	Pam	29°06'N	58°24'E	1062	11	1956-1966	*
3	702	Bandar Abbas	27°11'N	56°17'E	6	10	1957-1966	*
4	604	Birjand	32°52'N	59°12'E	1455	11	1956-1966	*
5	701	Bushehr	28°59'N	50°50'E	14	11	1956-1966	*
6	1	Gorgan	36°51'N	54°28'E	120	11	1956-1966	*
7	303	Hamedan	34°47'N	48°30'E	1877	11	1956-1966	*
8	108	Karaj	35°47'N	51°00'E	1300	7	1957-1963	
9	607	Kerman	30°15'N	56°58'E	1749	11	1956-1966	*
10	305	Kerman Shah	34°19'N	47°07'E	1322	11	1956-1966	*
11	214	Khoy	38°33'N	44°57'E	1100	9	1958-1966	*
12	104	Mashhad	36°16'N	59°38'E	985	11	1956-1966	*
13	400	Marvdasht	29°87'N	52°80'E	1500	4	1957-1960	*
14	8	Ramsar	36o54'N	50°40'E	20	11	1956-1966	*
15	3	Rasht	37°15'N	49°36'E	0	11	1956-1966	*
16	203	Rezayieh	37°32'N	45°05'E	1332	10	1957-1966	*
17	509	Sabzevar	36°13'N	57°40'E	940	11	1956-1966	*
18	314	Sanandaj	35°20'N	47°00'E	1538	7	1960-1966	*
19	401	Shiraz	29°36'N	52°32'E	1539	11	1956-1965	*
20	202	Tabriz	38°05'N	46°17'E	1362	10	1957-1966	*
21	103	Tehran	35°41'N	51°19'E	1191	11	1956-1966	*
22	518	Varamin	35°19'N	51°39'E	1000	7	1957-1963	*
23	201	Zanjan	36°41'N	48°29'E	1648	11	1956-1966	*
24	605	Zahedan	29°28'N	60°53'E	1370	11	1956-1966	*

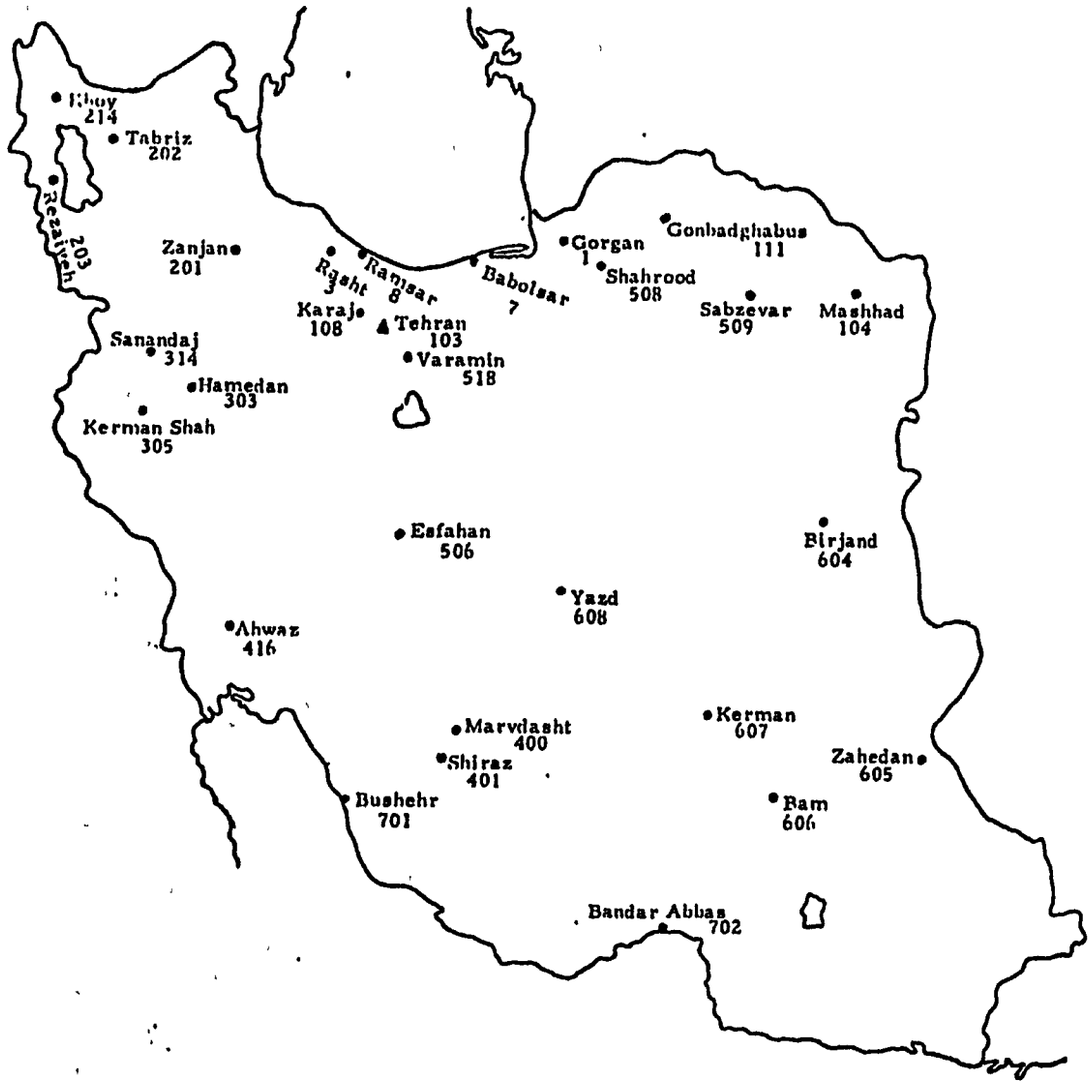

Figure 9. Map Showing the Geographical Location and Code Number of Weather Stations

by using EVPK computed by equation [65] as the base to compute ETPK. This formula is used in the following form:

$$ETPK = 0.755 \times EVPK \times CHVC \times CWVC \times CTVC \times CSVC \quad [65]$$

in which

EVPK = evaporation computed by formula [66]

$$CHVC = 0.499 + 0.620\ (HM/.60) - 0.199\ (HM/.60)^2 \quad [65a]$$

HM = humidity expressed decimally

$$CWVC = 1.189 - 0.240\ (W2K/6.7) + 0.051\ (W2K/6.7)^2 \quad [65b]$$

W2K = wind speed at 2 meters above the ground in Km/Hr

$$CTVC = 0.862 + 0.179\ (TM/20) - 0.041\ (TM/20)^2 \quad [65c]$$

TM = temperature in ^{o}C

$$CSVC = 0.904 + 0.008\ (S/.80) + 0.088\ (S/.80)^2 \quad [65d]$$

S = sunshine expressed decimally.

Computer program K_8 (Table 15) was used to compare the values of potential evapotranspiration formulas obtained from computer programs K_6 and K_7. For this comparison the ratio of the computed Etp to both EVPK and ETPK were calculated. The standard deviation of the computed values of Et from ETPK, in mm, was computed for each station and for the 24 stations.

RESULTS AND DISCUSSION

Evaporation Formula

The final formula developed to estimate Class A pan evaporation, called the Khosravi formula, EVPK, is

$$EVPK = 0.483 \times RMM \times CTK \times CWK \times CHK \times CSK \times CEK \quad [66]$$

where

0.483 is the formula constant

RMM = monthly extraterrestrial radiation reaching the earth's atmosphere, in equivalents of mm of evaporation

$$CTK = 0.50 + 0.35\ (TM/20) + 0.15\ (TM/20)^2 \quad [66a]$$

TM = temperature in ^{o}C

$$CWK = 0.67 + 0.33\ (W2K/5) \quad [66b]$$

W2K = wind speed at 2 meters above ground in Km/Hr

$$CHK = 1.05 - 0.05\ (HM/0.40) \quad [66c]$$

HM = humidity expressed decimally

$$CSK = 0.30 + 0.70\ (S/0.70) \quad [66d]$$

S = sunshine percentage

$$CEK = 0.94 + 0.06\ (EL/1000) \quad [66e]$$

EL = elevation in meters.

CTK, CWK, CHK, CSK, and CEK are temperature, wind, humidity, sunshine, and elevation coefficients, respectively. The values of these coefficients are given in Table 31 (Appendix E), together with the coefficients for the evapotranspiration formula, equation [65].

Comparison of Evaporation Formulas

The average absolute error expressed as a percent was used as a measure of how well the formulas fit the data. A comparison of these in Table 22 indicates that the Khosravi formula has the least error. The overall average absolute error is 8.6 for this formula compared to 11.9, 35.5, 10.6 and 10.6 for Blaney-Criddle, Penman, Hargreaves, and Christiansen formulas, respectively. Tables 29.1 to 29.5 in Appendix C show these comparisons for different stations individually, and Tables 28.1 to 28.6 give the values for the stations from which the new formula was developed.

Since the data used in the modification of Christiansen's formula in program K_1 (Table 15) are from different climatic regions in Iran, it appears that the new modified formula gives the best results when used to estimate Class A pan evaporation for Iran.

Comparison of Evapotranspiration Formulas

Since there were not sufficient experimental data on potential evapotranspiration with which the results from the five formulas could be compared, comparisons were made with the formula developed by the writer, equation [65]. This formula is not necessarily better than some of the others, but it seemed logical to choose this formula rather than any of the others for these comparisons. The results of the computations for the five formulas, designated ETPC (Christiansen), ETPH, (Hargreaves), ETPP (Penman), ETBC (Blaney-Criddle) and ETPK

Table 22. Comparison of Mean Monthly Measured Pan Evaporation and that Computed by Five Formulas (5 stations)

Station	Name	EVPM*	EVPC*	EVPH*	EVPP*	EVBC*	EVPK*
400	Marvdasht	195.1	193.5	198.3	135.0	202.2	201.2
Ratios EVPM/EVC*			1.008	0.984	1.445	0.965	0.969
Mean absolute error, %			6.0	5.9	30.8	7.8	7.4
416	Ahwaz	282.8	244.7	254.6	168.3	247.8	280.8
Ratios EVPM/EVC			1.156	1.111	1.681	1.141	1.007
Mean absolute error, %			14.5	16.1	40.5	14.6	7.2
506	Esfahan	180.8	170.4	175.1	133.4	200.0	178.4
Ratios EVPM/EVC			1.061	1.032	1.355	0.904	1.013
Mean absolute error, %			9.8	9.0	26.2	17.2	9.3
508	Shahrood	201.9	177.3	184.8	120.0	193.2	195.0
Ratios EVPM/EVC			1.139	1.092	1.682	1.045	1.035
Mean absolute error, %			12.2	13.0	40.6	9.8	10.2
608	Yazd	203.3	200.1	208.3	129.3	214.8	205.3
Ratios EVPM/EVC			1.016	0.976	1.572	0.946	0.990
Mean absolute error, %			8.8	12.1	36.4	9.6	9.3
Average EVC		212.8	197.2	204.2	137.2	211.6	212.1
Ratios EVPM/EVC			1.079	1.042	1.551	1.006	1.003
Overall mean absolute error, %			10.6	10.6	35.5	11.9	8.6

*EVC is the value computed by the five formulas
EVPM - measured Class A pan evaporation
EVPC - from Christiansen's formula, equation [37]
EVPH - from Harpreaves' formula, equation [48]
EVPP - from modified Penman's formula, equation [62]
EVBC - from Blaney-Criddle's formula, equation [64]
EVPK - from Khosravi's formula, equation [66]

(Khosravi), are given in Table 23. This table gives the mean monthly values of the computed evapotranspiration for each formula, and the mean ratio of these computed values to EVPK and ETPK, the computed values of pan evaporation and potential evapotranspiration, respectively.

For the four stations in the Caspian zone (Table 17) with the highest mean humidity (HM), the values of EVBC and the ratios are significantly higher than for the other formulas. This is to be expected since the Flaney-Criddle formula does not take into account differences in humidity. For the same four stations, the Hargreaves formula gives the next highest values (ETPH) and ratios, and Christiansen's formula (ETPC) gives the lowest values, with Penman's (ETPP) next. The writer's formula (ETPK) is intermediate for these stations.

The overall averages for the 24 stations is given in Table 24 together with the standard deviations from ETPK. For all stations the mean monthly ETPP from Penman's formula is the lowest, 107.9 mm, with Christiansen's next, 125.0, followed by the writer's, 127.7, Hargreaves', 144.3, and Blaney-Criddle (160.8). The mean average ratios of ETP to computed pan evaporation (EVPK) were 0.521 for Penman's, 0.604 for Christiansen's, 0.616 for the writer's, 0.697 for Hargreaves', and 0.777 for the Blaney-Criddle formula. This latter value is high because the K value for Ei was assumed to be 80 percent of that computed for pan evaporation. This estimated value of K appears to be too high judging from the other values.

TABLE 23. COMPARISON OF EVAPOTRANSPIRATION FORMULAS FOR IRAN

									CHRISTIANSEN FORMULA			HARGREAVES FORMULA			PENMAN FORMULA			BLANEY-CRIDDLE FORMULA			KHOSRAVI FORMULA	
STA.	MOS	HM	SUN	WSK	TM	PREC	RHM	EVPK	ETPC	RECV	RECT	ETPH	REHV	REHT	ETPP	REPV	FREP	ETBC	REPV	REBT	ETPK	REKV
1	120	.69	.59	6.93	18.0	59.9	375.9	166.7	96.5	.580	.850	134.9	.812	1.190	96.9	.583	.854	168.6	1.014	1.486	113.4	.683
3	120	.82	.47	6.85	15.8	108.8	373.3	118.5	57.5	.485	.710	97.1	.819	1.200	74.8	.631	.924	157.8	1.332	1.951	80.9	.683
7	120	.79	.49	6.93	16.8	62.9	376.0	132.8	67.5	.508	.746	107.7	.811	1.191	82.1	.618	.908	163.6	1.232	1.810	90.4	.681
9	120	.83	.47	6.89	16.0	108.1	374.9	115.7	54.2	.468	.685	94.9	.823	1.200	73.5	.635	.930	158.7	1.371	2.008	79.0	.683
103	132	.39	.70	7.85	16.8	16.7	380.6	241.0	147.4	.612	1.108	197.4	.612	1.108	119.7	.497	.900	164.7	.684	1.238	133.0	.552
104	120	.55	.67	6.95	17.8	16.9	377.0	194.2	119.3	.614	1.007	133.9	.689	1.130	99.7	.513	.842	150.7	.776	1.272	118.5	.610
109	80	.50	.74	7.22	19.2	17.3	379.1	210.5	131.3	.624	1.005	147.1	.699	1.126	104.2	.495	.798	151.8	.721	1.162	130.6	.621
201	120	.59	.67	6.91	11.7	25.4	374.6	182.8	115.2	.630	.990	134.5	.736	1.155	90.8	.497	.780	144.1	.788	1.238	116.4	.637
202	120	.56	.63	6.83	12.4	26.9	368.9	180.9	114.6	.634	1.019	128.8	.712	1.145	92.9	.514	.826	147.4	.815	1.310	112.5	.622
203	120	.60	.68	7.17	12.6	27.5	371.2	187.7	115.7	.617	.954	139.3	.743	1.149	92.4	.492	.762	146.3	.780	1.207	121.3	.646
214	80	.67	.65	6.54	12.6	19.0	366.9	168.5	100.5	.597	.884	133.4	.792	1.174	86.5	.514	.761	147.5	.876	1.297	113.7	.675
303	120	.53	.69	7.04	11.8	26.2	387.3	197.0	123.6	.627	1.041	135.9	.690	1.145	95.9	.487	.808	141.3	.717	1.191	118.7	.602
305	120	.50	.69	6.99	14.0	35.1	385.1	206.8	127.5	.616	1.059	136.0	.658	1.131	104.3	.504	.867	151.3	.732	1.258	120.3	.582
314	84	.51	.67	6.71	13.6	34.9	380.9	204.3	123.3	.628	1.057	136.6	.669	1.125	102.3	.501	.842	154.2	.755	1.270	121.4	.594
400	83	.44	.58	5.05	16.0	28.0	402.5	201.2	133.2	.662	1.096	134.3	.669	1.105	115.7	.575	.952	161.9	.804	1.331	121.6	.604
401	120	.40	.77	6.78	17.0	23.6	403.9	249.1	154.9	.627	1.080	157.1	.631	1.095	119.7	.481	.834	161.2	.647	1.124	143.5	.576
403	120	.42	.69	6.97	16.3	12.3	378.2	221.1	136.9	.619	1.081	140.2	.634	1.107	116.7	.528	.921	167.0	.755	1.318	126.7	.573
413	67	.54	.66	6.93	16.0	13.8	381.7	205.8	128.6	.625	.970	150.6	.732	1.135	110.6	.538	.834	162.5	.789	1.225	132.7	.645
604	120	.37	.72	7.06	16.8	13.1	391.8	242.8	151.8	.625	1.113	150.1	.618	1.101	120.5	.496	.983	162.4	.669	1.190	136.4	.562
605	120	.32	.73	7.24	17.9	9.8	404.7	258.7	159.5	.616	1.150	152.8	.590	1.102	130.0	.503	.938	165.0	.638	1.189	138.7	.536
606	120	.36	.77	7.14	22.1	5.4	407.6	294.5	181.9	.618	1.050	186.1	.637	1.075	142.5	.484	.823	183.2	.622	1.057	173.2	.588
607	108	.32	.71	7.11	15.2	13.8	401.9	233.1	145.9	.626	1.184	137.5	.590	1.120	119.4	.512	.972	155.3	.666	1.264	122.8	.527
701	120	.64	.75	7.79	24.2	15.4	409.7	266.9	150.0	.557	.797	217.5	.796	1.129	147.1	.537	.755	191.1	.716	1.015	188.3	.705
702	120	.66	.78	7.27	27.3	13.0	416.0	290.4	158.6	.546	.758	234.7	.808	1.118	157.2	.541	.749	202.5	.697	.965	209.9	.723

TABLE 24. COMPARISON OF EVAPOTRANSPIRATION FORMULAS FOR IRAN

OVERALL AVERAGES FOR 24 STATIONS IN IRAN

								CHRISTIANSEN FORMULA			HARGREAVES FORMULA			PENMAN FORMULA			BLANEY-CRIDDLE FORMULA			KHOSRAVI FORMULA	
MONTHS	HM	SUN	WV	TM	PPEC	PMM	FVPK	ETPC	RECV	RECT	ETPH	PEHV	HEHT	ETPP	REPV	EREP	ETBC	REBV	REBT	ETPK	REKV
2615	.54	.67	6.05	16.2	30.4	385.9	207.1	125.0	.604	.979	144.3	.697	1.130	107.9	.521	.846	160.8	.777	1.260	127.7	.616
STANDARD DEVIATION FROM ETPK, MM.								22.0			17.9			29.7			46.3				

Table 30.1 to 30.24 in Appendix C gives the average monthly values and ratios for each of the 24 stations. The geographical location of these stations was shown in Figure 9 with the code number.

Determination of Actual Evapotranspiration

No attempt was made to compute the actual evapotranspiration because the data of measured potential evapotranspiration was available only for the Marvdasht Pilot Project, and even these data were very limited (only two years). As more experimental data becomes available in the future it will be possible to compute the actual evapotranspiration of various crops for different regions. Table 25 gives the ratios of potential evapotranspiration measured experimentally, to measured Class A pan evaporation. Table 26 shows the ratio of measured potential evapotranspiration to computed values of potential evapotranspiration for Marvdasht Pilot Project from the Hargraves formula. This formula was used because the computations were made before the writer's formula was finalized.

The ratios of the measured evapotranspiration to the measured pan evaporation (Table 25) are very reasonable for all of the field sampling data and for the grass in the lysimeters. For the other lysimeter data, the values are exceptionally high for the tall plants, especially the cotton. Difficulty is usually experienced in obtaining actual values of evapotranspiration with small lysimeters, because the

TABLE 25. COMPARISON OF MEASURED EVAPOTRANSPIRATION TO MEASURED PAN EVAPORATION

CROP - METHOD - YEAR	JAN	FEB	MAR	APR	MAY	JUNE	JULY	AUG	SEPT	OCT	NOV	DEC
GRASS - LYSIMETER 59	.000	.000	.600	.718	.563	.582	.351	.651	.658	.882	.000	.000
ALFALFA - SAMPLING 1968	.000	.000	.232	.398	.939	.855	.991	.926	.965	.860	.871	.000
ALFALFA - LYSIMETER 59	.000	.000	.000	.735	.625	.967	.717	1.140	1.127	.794	.000	.000
COTTON - LYSIMETER 1968	.000	.000	.000	.000	1.037	1.643	.513	2.488	2.367	2.059	.000	.000
MEXICAN WHEAT - LYSIMETER 68-9	.560	.567	.893	1.697	1.720	.393	.000	.000	.000	.000	.806	.783
BARLEY - LYSIMETER 68-69	.000	.573	1.071	1.554	.683	.000	.000	.000	.000	.000	.645	.737
DESHAN WHEAT - SAMPLING 68	.250	.267	.296	.821	.671	.325	.000	.000	.000	.000	.000	.000
SUGAR BEETS - SAMPLING 68	.000	.000	.232	.479	.683	.355	1.038	.926	1.070	1.175	1.065	.000
SUNFLOWERS - SAMPLING 68	.000	.000	.000	.375	.439	.846	1.057	.380	.000	.000	.000	.000
SUNFLOWERS - SAMPLING 69	.000	.000	.000	.409	.438	1.193	.953	.628	.000	.000	.000	.000

TABLE 26. COMPARISON OF MEASURED EVAPOTRANSPIRATION TO COMPUTED POTENTIAL EVAPOTRANSPIRATION

CROP - METHOD - YEAR	JAN	FEB	MAR	APR	MAY	JUNE	JULY	AUG	SEPT	OCT	NOV	DEC
GRASS - LYSIMETER 69	.000	.000	.963	.868	.785	.912	.729	.911	1.077	1.737	.000	.000
ALFALFA - SAMPLING 1968	.000	.000	.394	.448	1.426	1.546	1.549	1.570	1.637	1.475	1.394	.000
ALFALFA - LYSIMETER 69	.000	.000	.010	.993	.872	1.349	1.488	1.594	1.843	1.563	.000	.000
COTTON - LYSIMETER 1968	.000	.000	.000	.000	1.448	2.293	1.065	3.491	3.872	4.052	.000	.000
MEXICAN WHEAT - LYSIMETER 68-9	.842	1.094	1.517	1.874	1.852	.711	.000	.000	.000	.000	1.291	2.004
BARLEY - LYSIMETER 68-69	.919	1.030	1.820	1.772	1.037	.000	.000	.000	.000	.000	1.033	1.871
ROSHAN WHEAT - SAMPLING 69	.393	.515	.485	.937	1.019	.583	.000	.000	.000	.000	.000	.000
SUGAR BEETS - SAMPLING 68	.000	.000	.394	.489	1.037	1.546	1.622	1.570	1.815	2.017	1.704	.000
SUNFLOWERS - SAMPLING 68	.000	.000	.000	.429	.667	1.531	1.652	.644	.000	.000	.000	.000
SUNFLOWERS - SAMPLING 69	.000	.000	.000	.496	.611	1.670	1.999	.878	.000	.000	.000	.000

plants in the lysimeters generally gorw more vigorously and taller than the plants surrounding the lysimeter, and hence receive more radiant and advective energy than the average field plants.

The ratios of measured evapotranspiration to the computed potential evapotranspiration (Table 26) appear to be fairly reasonable except for cotton. These high ratios for cotton also suggest that the lysimeter data for tall crops may not be representative of field crops.

SUMMARY AND CONCLUSIONS

A review of the literature pertaining to evaporation, potential evapotranspiration and information on Iran was undertaken. The literature on these subjects is volumunous; this review included 47 references. Time did not permit a more thorough study.

A formula, equation [66], for estimating pan evaporation was developed from climatic and evaporation data for 6 stations in Iran. This formula was then compared with formulas by Christiansen, equation [37], Hargreaves' equation [48], Penman's equation [62], and Blaney-Criddle, using computed mean monthly k values, equation [64]. This comparison, Table 22, shows that the writer's formula had the lowest overall mean absolute error, 8.6 percent.

A formula for estimating potential evapotranspiration was also developed using the coefficients given by Christiansen's equation [38], but using the computed values of EVPK as the base, since measured pan evaporation was not available for most of the 24 stations included in the study. A comparison of the 5 formulas for evapotranspiration was made by comparing the other 4 with the writer's formula.

Measured evapotranspiration at the Marvadasht Pilot Project, code number 400, was compared with pan evaporation, and with potential evapotranspiration computed from Hargreaves' formula, equation [49]. The ratios of the measured evapotranspiration to measured pan evaporation were very reasonable for the field sampling data and for

grass in the lysimeters, but the ratios appeared somewhat high for tall crops in lysimeters, especially cotton. The same was true for the ratios of measured evapotranspiration to EVPH.

Additional data on both pan evaporation and actual measurements of evapotranspiration would be of great value in a study of this kind. Great care should be exercised in the use of small lysimeters for determining evapotranspiration for all tall crops to see that the density, vigor and growth of the plants in the lysimeters are the same as for those surrounding the lysimeters. Field sampling to determine actual evapotranspiration of most crops, when carefully done, may give more reliable results.