PN-ADI-367

FINAL REPORT

Covering Period: April 1, 2000 to March 31, 2004

Submitted to the U.S. Agency for International Development, Bureau for Economic Growth, Agriculture, and Trade

AIR POLLUTION CONTROL IN COTTONSEED OIL INDUSTRY

Project Number: 151-875 and Grant Number: **TA-MOU-98-CA17-010**

Principal investigator: Prof. Itzhak Shmulevich
Grantee Institution: Technion -Israel Institute of Technology

Co-principal Investigator: Dr. Semion Tabak
Grantee Institution: Technion -Israel Institute of Technology,
Agricultural Engineering Department, Haifa, 32000, Israel
Tel: 972-4-8292622; e-mail: agrtabak@tx.technion.ac.il
tabaksm@yahoo.com

Co-principal Investigator: Prof. Bachtiar A. Askarov
Institution: Architectural-Building Institute of Tashkent
13, Navoi Str. Tashkent, Uzbekistan
Tel: 998-711-482136

Administration Official: Head, R & D
Administration Mr. Felix Naggar
Institutional Affiliation: Technion -Israel Institute of Technology
Address: Technion City, Haifa, 32000, Israel
Telephone Number: +972-4-8292576
FAX Number: +972-4-8326607
E-mail address: fnn@tx.technion.ac.il

Administration Official: Rector
Prof. B. Askarov
Institutional Affiliation: Architectural-Building Institute of Tashkent
Address: 13, Navoi Str. Tashkent, Uzbekistan
Telephone Number: +998-711-482136
FAX Number: +998-712-418000

TABLE OF CONTENTS

Description	Page
B) Table of Contents	2
C) Executive Summary	3
D) Research Objectives	4
E) Method and Results	5
F) Impact, Relevance, and Technology Transfer	34
G) Project Activities/Outputs	34
H) Project Productivity	36
I) Future Work	36
J) Literature Cited	37

Appendix: Reprint of the published paper

Acknowledgments: Israel and Uzbekistan collaborators wish to thank the U.S.-Israel Cooperative Development Research Program, Economic Growth, U.S. Agency for International Development for support in this fruitful international scientific collaboration.

C) Executive Summary: The purpose of the project was to study of principal properties of aerosols under operating conditions at cottonseed oil mill in Uzbekistan. For this reason equipment for personal and stationary air sampling was purchased for Uzbekistan collaborators. The collaborating researchers to became familiar with the research tools visited Israel and got training in Technion-Israel Institute of Technology, in Israel Institute for Occupational Safety and Hygiene, and in Laboratory of Air Pollution in Israel Ministry of Labor. Mass concentration of particles and their size distribution have been studied in hulling - separation department of the Cottonseed Oil Mill in Uzbekistan. The average level of dust concentration have been measured by the stationary personal samplers and by personal samplers attached to the operators. It was found that a major fraction of the cottonseed dust found in the hulling–separation room consisted of respirable particles.

With the purpose of study of properties of the cottonseed packed bed filters used for cleaning of air and catching of valuable dust in processes at cottonseed oil mills an experimental installation was developed and assembled in Technion (Israel). Experiments were carried on to study the parameters that influence the pressure drop and mean velocity for air flow through packing of cottonseed. Dimensionally homogeneous predictionable equation that relates the pressure drop to the airflow rate was proposed. A joint paper with Uzbekistan collaborators "Airflow through Granular Beds packed with Cottonseeds" was published in scientific journal 'Biosystems Engineering'.

Pilot rigs were developed and assembled in Architectural Building Institute of Tashkent and in hulling-separation room at cottonseed oil mill for study of air-cleaning properties of cottonseed packed bed filters. The measured data showed that pressure drop increases with increasing of dust concentration in the air, of airflow rate, and thickness of the bed layer.

Our experiments showed that granular bed filters filled by cottonseeds provide good possibilities for adjustment of dust particle removal and cleaning of air in local exhaust ventilation systems. Inexpensive cottonseed fillers, which were return to the raw material after its filling with dust, made possible unnecessary of additional dust-removing devices. The cottonseed bed filters located in exhaust hoods made practicable development of principal new local exhaust ventilation systems.

D) Research Objectives: The purpose of this research was to study and develop methods and devices that control dust particle emissions in cottonseed oil processing. Another objective pursued in this research is the reduction in the loss of raw materials during particle emissions. Suggested in this research is the cottonseed filled bed filters, placed inside suction hoods of aspiration or local exhaust ventilation systems, which are differentiated from the usual ventilation systems in the mentioned processes and contains the innovative aspects of the project.

This study was undertaken to develop information on the dust levels, and the particle size distribution in the working environment of hulling-separation area during the normal processing operations in high-capacity hulling-separation processes at cottonseed oil mill in Uzbekistan.

The purpose of this study is to obtain general expression for prediction of pressure drop across beds due to resistance caused by the presence of cottonseed particles in the layer, to analyze the mechanism of cotton dust removal by layer packed by cottonseed as well.

E) Method and Results:

Research Performed in Uzbekistan:

Dust-concentration determination.

The "total dust" mass sampling carried out by personal sampler that was used as a roving sampler in workers breathing zone and at stationary locations were placed stationary personal samplers. Stationary personal samplers were used for "area or fixed sampling" (Hinds, 1999). Open face type 37-mm filter holders (SKC, Inc., Catalog No. 225-1) were mounted at breathing zone height on stands (SKC, Inc., Catalog No. 225-503). A three-piece cassette constructed of polystyrene to hold a 37-mm-diameter filter was used. Dust samples were collected on a 37-mm-diameter polyvinylcloride filters with a 5-μm-pore size (SKC, Inc., Catalog No. 225-8-01). The personal air sampler was attached to a AirChek 2000 pump with NiCad battery pack (SKC, Inc., Catalog No. 210-2002).

The IOM inhalable dust samplers (SKC, Inc., Catalog No. 225-70A) we used as roving samplers. It was a reusable filter cassette with a sampling head designed to better measure a worker's exposure to total airborne particulate. The personal dust sampling device has a cylindrical body 37 mm in diameter. One end of the cylinder contains a flat circular cover cap that has a 15 mm circular orifice with a thin lip protruding outwards. When taking a sample with the IOM Inhalable Dust Sampler, the IOM cassette/filter was weighed as a single unit before (pre-weigh) and after (post-weigh) sampling. Therefore, all of the dust both on the filter and on the internal walls of the cassette is contained in the data, including the typically larger dust particles; nothing inside the cassette/filter assembly escapes analysis (Mark and Vincent, 1986). The IOM Sampler used with a reusable filter cassette that holds a 25 mm filter with a 5-μm-pore size. The IOM Pump Kit, includes PCXR4 sample pump, charger, single adjustable low flow holder, etc. (Cat. No.224-PCXR4PKB (230V)).

The flow rate of a personal sampler was 2.0 l/min. By that air flow rate the IOM Sampler effectively traps dust particulates up to 100 μm in size (Mark and Vincent, 1986).

Air samples in each distinct work area at the hulling-separation room were collected at locations which provide representative samples of air to which the worker is exposed (*Fig. 1*). The samplers were cleaned prior to sampling. The samplers were calibrated in the laboratory before they are used in the workshop. The orifices were calibrated by use of a wet test meter. After exposure the cassette with samples were shipped to the analytical laboratory in a suitable container to prevent damage in transit. The filters were faced upward (Wesley et al. 1979, Hughs et al. 1981) to insure that the collected dust didn't lost before laboratory weighing.

An analytical balance that has a sensitivity of 0.01mg (Sartorius, model MC210S) used for weighing of the sample. The balance was located in a dust free air-conditioned room with controlled temperature 24°C plus or minus 1°C and relative humidity (RH) 45%. The filters to equilibrate them were held in this environment for a 24 h before each weighing, i.e. before and after exposure. As it recommended (Hinds, 1999) three blank (control) filters and a reference mass of approximately the same weight as the filters were weighed each time as the filters are weighed. Field blanks were collected and used to correct field sample weights. Dust concentrations were calculated by dividing the corrected weight of dust collected on each filter by the volume of sampled air.

The total dust concentration is expected being measured by two mentioned types of personal samplers simultaneously, attached to the two sides of each operator.

Particle size measurements

Dust samples for particle-size analyses were collected with the same sampling equipment as for dust level measurements (ASHRAE, 1993b; ACGIH, 1983 and 1988; Bernhardt, 1994; Allen, 1990; EPA, 1984; Hinds, 1999).

Allen (1990) wrote that filtration is the simplest method of removing particles from the atmosphere for subsequent analysis. The most efficient filters for this purpose are the membrane filters that consist of cellulose esters. They were used in our experiments. These filters are soluble in acetone, so that was possible to dissolve away the filter and transfer the deposited material to prepared surfaces for further examination. The membrane filter was placed on a dry microscope slide. The slide is inverted over a

watch glass half-filled with acetone, the vapors of which render the filter transparent after two or five minutes. The filter is allowed to dry for two to five minutes and is then ready for analysis.

Dust samples were collected on a 37-mm-diameter mixed cellulose esters (MCE) filters with a 0.45-μm-pore size (SKC, Inc., Catalog No. 225-9). Dust samples collected by the IOM Samplers were on a 25-mm-diameter MCE filters with a 0.8-μm-pore size (SKC, Inc., Catalog No 225-19).

As it recommended (Wesley et al.1979) all samplers we started at the same time and allowed them to run for 30 to 60 min to get an adequate deposit of dust on the filters for particle size measurements. The filters were handled in the same manner as described for filters used for dust-level determinations.

Dust particles were sized with graduated scales, using a standard microscope. The method includes visual determination of particle sizes in which individual particles are observed and measured. The particle size was the projected area diameter in stable orientation in microscopy. The total number of measured particles for one station was about 600.

Results of measurement of particles concentrations and particle size distribution

In this chapter are given the results of measurements of particle concentrations and particle size distribution in air of hulling -separation room at Uzbekistan cottonseed oil mill.

In Table 1 is shown the average mass concentrations of particles at the second floor of hulling - separation room. The weighted average elutriated concentration was 36.11 ± 32.11 mg/m^3 (n=49), where n is the number of filters analyzed. Total mass concentrations measured by the stationary personal samplers in adjacent locations averaged 134.24 ± 112.62 mg/m^3 (n=45). Dust concentration measured by the roving personal samplers averaged 132.94 ± 108.24 mg/m^3 (n=66). The large difference in airborne dust concentrations measured by the total mass samplers and the vertical elutriators resulted mainly from a considerable amount of short non-respirable airborne fibers.

The highest elutriated concentrations were found in between the huller–separator pairs (in locations V1, V3, V6, V7, see Figure 3). The stationary personal samplers (SPSs), however, did not give such distinctive results. Minimum readings by any measurement technique were achieved in the alley

between the two rows of huller–separator pairs (in locations V4, SP7, SP8, and SP9). This finding was predicted based on the huller–separator design and the central feeding of the two-huller rows, causing dust emanation away from the symmetry plane in Figure 3. Similarly, readings of personal samplers attached to operators spending more time near the locations V4, SP7, SP8 and SP9 were much lower (50% or less) than those of workers in other locations (Table 1).

Typical size distributions of cotton dust particulate matter generated during normal operations in the hulling–separation room are listed in Table 2. About 40–60% of the measured particles were <2 μm, and about 75–85% had a diameter <8 μm. That means, a large fraction of the dust emanated during normal operations in the cottonseed oil mill is respirable.

Discussion on dust levels in the hulling–separation department

Our results show a considerable variation in dust levels in the hulling–separation room, with the highest readings obtained in between huller–separator units on the same row.

A major fraction of the cotton dust found in the hulling–separation room consisted of respirable particles (Table 2). For quantifying potential exposure of workers in the hulling–separation department to respirable cotton dust, a correlation between the average concentration of cotton dust at breathing height, as measured by the stationary VEs, and the concentration actually in contact with the workers, as measured by the RPSs, is required.

Non-uniform airborne dust concentrations were found at breathing height in the hulling–separation department of a cottonseed oil mill. A major fraction of the dust (wt %) consisted of particles larger than 15 μm. Differences in readings of the vertical elutriators, stationary personal samplers, and roving personal samplers are statistically significant, and are attributed to the distinct nature of the sampler dynamics during sampling. The obtained in measurements data can be used for estimating the potential occupational exposure to cotton dust of workers in the hulling–separation room of cottonseed oil mills.

Research Performed in Israel

Method and Procedure Facilities. Development of experimental set-up to study the pressure drop across cottonseed filled beds.

To study the pressure drop across beds due to resistance caused by the presence of cottonseed particles in the layer an experimental installation was developed. The experimental set-up is shown in *Fig. 2*. Our experimental set-up is essentially similar to the installation used by (Carman P C, 1997; Dairo O U & Ajibola O O, 1994; Devies C N, 1973; Fuchs N A, 1973; Otany Y et al., 1989; Pagano A M et al., 2000; Tabak S, 1989; Tardos G I, 1997; Tien C, 1989).

Experimental stand included the following elements: the studied granular bed filter (A) filled by cottonseed, diffuser before the filter and contractor after it, a fan (B), ducts (C), damper (D).

The studied filter had a parallelepiped spaced frame constructed with an angle bar. The cross-section of the two opposite sides of the frame exposed to the direction of airflow was 1*1m and the width was of variable value, changed from 50 to 150 mm. A right angle basket including cottonseed filler was placed into the frame. There were three types of baskets. Each had different width 50, 100, and 150 mm. Baskets were built of angle bars and the parallel sides exposed to air flow were covered by grids of wire.

Continuous bulk density of filled cottonseeds 760 kg/m^3 in studied filters was maintained by weighing of filled cottonseed and by keeping even distribution of the loading seeds in the filter.

Calibrated Pitot (E) tube and an orifice flowmeter were used for airflow rate measurements. The orifice flowmeter (F) was built in the round pipe; its diameter was 78 mm. The flowmeter was installed between flanges connecting two pipe sections. Flange pressure tapes penetrate the flange and are at a standard distance of 25.4mm (1 inch) from either side of the orifice. The exact geometry and specification of the orifice followed the ISO 5167-1 (1991), ISO5167-1, Amendment 1 (1998) and ASME (1971) standards.

The pressure drop values were measured at three points: on the filter, i.e. before and after it; by Pitot tube, and by orifice flowmeter. Each of the measurement points were connected to a separate

differential manometer (SHAEVITZ Pressure Sensors, P-3061 Transducer) and a computer data acquisition system (LABTECH, Laboratory Technologies Corporation, Version 6.1.2). Each of the mentioned measurement points were connected parallel to a single U-manometer. The pressure drop values measured on the filter were determined as the difference between the overall pressure drop in air flow through the filled filters and pressure drop through the basket grids only. Each test was made during 10 sec and repeated 100-1[illegible]) times and the average pressure drop in airflow was determined. To get proper values of air densities dry bulb and wet bulb temperatures were measured during the experiments.

Results of measurement of the pressure drop across cottonseed filled beds.

The values of the pressure drop due to the airflow through beds of fuzzy and bare cottonseed particles of different layer thickness, *i.e.*, 50, 100 and 150 mm are presented in *Fig. 3*

The airflow rate per unit area of filter surface perpendicular to the air stream flow was varied from 0.025 ($m^3 s^{-1}$) m^{-2} to 0.22 ($m^3 s^{-1}$) m^{-2}. As the flow rate of air increased, the pressure drop across the filter increased for all of the particles tested. As the airflow rate increased from about 0.025 ($m^3 s^{-1}$) m^{-2} to 0.22 ($m^3 s^{-1}$) m^{-2}, the pressure drop increased from about 14 to 85 Pa for the fuzzy and to 74 Pa for bare cottonseeds in the bed of 50 mm thickness. However, as seen from *Fig.3*, the pressure drop for both the 100 and 150 mm thickness of fuzzy cottonseed beds considerably exceeds the pressure drop for the fuzzy cottonseeds in the bed of 50 mm thickness, with pressure drop from 15 to 182 Pa and from 20 to 257 Pa, respectively.

The measured pressure drop in the bed of 100 and 150 mm thickness of fuzzy cottonseed, considerably exceeds the pressure drop measured in the bare cottonseed beds of the same thickness. The pressure drop increased from approximately 15 to 182 Pa in the 100 mm fuzzy cottonseed bed, and from 13 to 159 Pa in the 100 mm bare cottonseed bed, as the air flow rate increased from about 0.025 ($m^3 s^{-1}$) m^{-2} to 0.22 ($m^3 s^{-1}$) m^{-2}. As the flow rate of air increased the pressure drop increased from about 20 to 257 Pa in 150 mm fuzzy cottonseed bed, and from 20 to 219 Pa in 150 mm bare cottonseed bed.

Increasing of the thickness of the both fuzzy and bare cottonseed bed from 50 to 100 to 150 mm leads to a relatively even increase in the pressure drop due to the airflow through the bed.

Calculations and discussion on the pressure drop across cottonseed filled beds

The expressions, needed to predict the pressure drop across the beds, caused by the resistance from the presence of the particles, was based on Eqn (1) proposed by Carman (Coulson *et al.*, 1991) and equation (2) proposed by Ergun (Coulson *et al.*, 1991).

Carman (Coulson *et al.*, 1991) found that when $R_1/\rho u_1^2$ was plotted against Re_1 using logarithmic coordinates, the data for the flow through randomly packed bed of solid particles could be correlated approximately by a single curve, of general equation:

$$\frac{R_1}{\rho u_1^2} = aRe_1^b + cRe_1^d \qquad (1)$$

where: a, b, c, d are constants.

Ergun (Coulson *et al.*, 1991) has obtained a good semi-empirical correlation for pressure drop as follows:

$$\frac{R_1}{\rho u_1^2} = aRe_1^b + c \qquad (2)$$

The calculations to obtain the best-fit coefficients and the corresponding plots were carried out using Microsoft Excel. Numerical values for the coefficients, where $c=0$ are given below. Coefficient a had values 22.72, 45.13 and 50.06 for bare seed fillers, and 44.07, 55.0 and 58.0 for fuzzy seeds, where thickness of the fillers changed from 50 to 100 and 150 correspondingly. The values of coefficient a for fuzzy seeds exceed values of coefficient a of bar seeds for beds with the same thickness. The possible reasons for this behavior was the presence of short fibers adhered to the cottonseed hull. Moreover, the difference between the coefficients obtained in this research is probably due to the unusual morphology and surface character of the filler particles, including the fuzziness of the cotton seeds in comparison to the smoother and much more spherical shape of the particles used by other investigators (Coulson *et al.*, 1991). The peculiarity of the shape and surface characteristics of the

cottonseed particles also leads to differences in the values of their drag coefficient (Tabak & Wolf, 1998).

Calculated values of exponent *b* were found to vary from -1.11 to -0.91 for studied different cottonseed beds. The values of exponent *b* were very close to the value of -1 obtained by Carman, Kozeny (Coulson *et al.*, 1991) and Ergun (1952) using the analogy between streamline flow through a tube and streamline flow through the pores in a bed of particles.

Conclusions for pressure drop due to airflow across beds filled with cottonseeds.

In this study the cottonseed bed fillers of different fuzziness were used. Therefore the pressure drop due to airflow across beds filled with cottonseeds depends on the airflow rate, the thickness of the bed and the fuzziness of cottonseeds. The pressure drop was found to increase as the flow rate of air increased for beds of all particles studied. The pressure drop increased from about 14 to 85 Pa for fuzzy and from 14 to 74 Pa for bare cottonseed beds both of 50 mm thickness and as the air flow rate was increased from about 0.025 ($m^3 s^{-1}$) m^{-2} to 0.22 ($m^3 s^{-1}$) m^{-2}.

For the same range of airflow rate, the pressure drop was found to increase approximately from 15 to 182 Pa for fuzzy cottonseed beds of 100 mm and from 20 to 257 Pa of 150 mm thickness and from 13 to 159 Pa for a bare cottonseed bed of 100 mm thickness, and from 20 to 219 Pa for a bare cottonseed bed of 150 mm thickness. Thus the pressure drop in 100 and 150 mm fuzzy cottonseed beds considerably exceeds the pressure drop in bare cottonseed beds of the same thickness. An increase in thickness of the bare and fuzzy cottonseed bed from 50 to 150 mm results in a monotonic increase in pressure drop at the same airflow through the bed.

Research Performed in Israel and Uzbekistan

Air Cleaning by Cottonseed Bed Filters

Our experiments showed that granular bed filters, filled by particles of cottonseeds and placed in suction hoods solved many problems in aspiration systems, like carrying out of low particulate concentration in ducts and prevention of duct obstruction. It makes possible of regulating of air cleaning efficiency, the resistance of filter, dust-holding capacity and the like. It leads to unnecessary of additional dust-removing devices and provides of recovering dust particles in raw material. The cottonseed filter fillers are inexpensive, they were returned to the raw material after its filling with dust.

The functioning of granular bed filter may be qualified (ASHRAE, 2000; ASHRAE Standard 52-1) by the following minimum of parameters: effectiveness, pressure drop, dust holding capacity, etc. It is also important to take in account the effect of formation of compressible and incompressible deposits on incompressible partition.

Experimental study on experimental rigs equipped with cottonseed bed filters performed in Technion (Haifa, Israel) and Ventilation laboratory in Tashkent (Uzbekistan). The study included investigation of the next parameters:

1. Aerodynamical characteristics of the clean filters that included study of pressure drop across the filter (its resistance) as a function of airflow rate, type of bed filler, thickness of the bed layer.

2. Efficiency (or arrestance) of filter.

3. Pressure drop versus parameters of dust air mixture and duration of filter function (before the next cleaning and regeneration of fillers).

4. Dust holding capacity (integrated amount of dust held by the filter)

5. The available duration of filter operating without regeneration in economically expedient conditions.

The methods of the investigation are based on the recommendations of (ACGIH, 1983; ASHRAE, 1999; ASHRAE, 2000; ASHRAE, 2001, ASHRAE, Standard 52-1; US EPA (40CFR-Chapter 1-Part

60, Appendix A, Method 5); EPA, ReportNo.EPA-600/4-77-27b, 1984; Tabak S, 1989; Tomany J P, 1975). The data obtained during the experiment was representative of the conditions of technological equipment operation and revealed the characteristics that will be important to the consumer. The experiments were carried out as near as possible to the operating conditions of filter employment.

Efficiency of an air cleaner measures their ability to remove particulate matter from an air stream. The degree to which particulate matter is separated from air stream is known as the efficiency of a collector and the fraction of material escaping collection is the penetration.

The efficiency of a collector is expressed (ASHRAE, 2000) as a percent of the mass flow rate of material entering and exiting the collector:

$$\eta = 100(w_i - w_0)/w_i = 100w_c/w_i,$$

where:

η -efficiency of collector, %;

w_i -mass flow rate of contamination in gases entering collector;

w_0 - mass flow rate of contamination in gases exiting collector;

w_c - mass flow rate of contamination captured by collector.

The efficiency of a collector can be expressed in terms of the concentrations of particulate matter entering and exiting equipment.

Facilities. Development of an experimental installation for study the filter characteristics.

According to our experience in experimental investigations of granular bed filters and the recommendations of literature sources (ASHRAE, Standard 52-1; US EPA Electronic Code of Federal Regulations (40CFR-Chapter 1-Part 60, Appendix A, Method 5); EPA, Report No.EPA-600/4-77-27b, 1984; Tabak S, 1989; Tomany J P, 1975) the experimental installation included the following devices and elements: an intake contractor, ducts, dust feeder device for quispace distribution of experimental dust, diffuser, the studied granular bed filter, contractor, orifice meter for measuring of the air flow rate, choke, a fan, a dust scoop nozzle with chuck.

The investigated filler was placed between two grids of wires. The distance between the grids was able for arranging. The investigation was carried out with filters of 50, 100 and 150 mm thickness bed fillers.

The method of collecting a sample of particulate matter from a gas stream involves collection train for a specific period of time. In order to insure particle size-representative sample (especially for particles larger than 1 micrometer as it is in case of cottonseed dust) from the primary stream. the flow into the probe must be isokinetic, i.e. the speed and direction of the air flow entering the prob must be equal to those of the primary stream. In addition, the leading edge of the prob must be knife-edged to minimize particle impaction losses.

"Apex Instruments" Isokinetic Method 5 Source Sampler, confirmed with the construction design criteria and specifications cited in US EPA Method 5, Code of Federal Regulations (40CFR Part 60) and APTD-0581 Document was used in our experiments.

To carry out the experiment as near as possible to the operating conditions of really filter employment the dust used in the experiment was collected from hulling separation operations at cottonseed oil mill. The quantity of the dust that is going to the filter is determined by weighing the dust which is served by the feeder and is controlled by means of calculating the data received after measuring the concentration of the dust before the filter, the volume of the used air and the duration of the experiment.

The quantity of the dust caught by the filter was determined by calculating the data received after measuring the concentration of the dust in the air in front of and behind the filter and the corresponding volume of the used air and the duration of the experiment. The mass of dust that had not been caught by the filter was calculated as a difference between the served and the caught dust and calculated the residual concentration of the dust.

Results and discussion on pressure drop and effectiveness of dust catching by cottonseed filled bed filters.

The values of the pressure drop and effectiveness of dust catching by cottonseed filled filters of different thickness of 50 and 100 mm, initial concentration of dust of 0.5, 1.0 and 2.0 g m^3 are presented in Table 3 and 4. The initial filtration velocity was 0.2 m^3/s.

It is seen from the Table 3 and 4 as the time of filters using was increased, the pressure drop and effectiveness was found to increase for samples of all dust concentrations. Maximal pressure drop where using of the studied filters could be expedient were 1000-1200 Pa. That is the time when the cottonseed filler in the filter have to be cleaned or changed. These values were accepted basing on our experience of design of local exhaust ventilation systems. In Table 3 is shown that pressure drop of 1263 Pa was reached in 50 mm thickness filter by concentration of dust 0.5 g/m^3 during 55 h after beginning of testing. From Table 4 is seen that at the same conditions for filter of 100 mm thickness pressure drop of 1140 Pa was reached during 90 h of it functioning.

It is seen from the Table 3 and 4 that the pressure drop in air flow with initial concentration in the range 1.0- 2.0 g/m^3 considerably exceeds the pressure drop in air flow whose initial concentration was 0.5 g/m^3. In the Table 3 is shown that for filter of 50 mm thickness by dust concentration of 2 g/m^3 maximal expedient pressure drop of 1181 Pa and effectiveness of 99.9% were reached during 35 h. During 35 h pressure drop reached of 814 Pa and effectiveness 99.2% in the same filter by dust concentrations of 0.5 g/m^3. Maximal expedient pressure drop of 1263 Pa and effectiveness of 99.7% were reached in filter of 50 mm thickness by concentrations of dust 0.5 g/m^3 during 55 h. After 35 h testing the pressure drop reached the maximal expedient value of 1133 Pa and effectiveness of 99.9 % in the 50 mm thickness filter by dust concentration 1.0 g/m^3.

In Table 4 is shown that in filter of 100 mm thickness the maximal expedient pressure drop were reached 1176 Pa during 35 h, 1112 Pa during 60 h, and 1140 Pa after 90 h by initial dust concentrations of 2.0 g/m^3, 1.0 and 0.5 g/m^3correspondingly. The effectiveness of the filters was there 99.90, 99.89 and 98.89 % accordingly.

Influence of the cottonseed filler bed thickness on the pressure drop and effectiveness of the filter was shown in Table 5. There was a comparison between bed 50 and 100 mm filler thickness. At the

beginning of the experiment (0 h) pressure drop of 320 Pa in 100 mm thickness bed about two times larger then pressure drop in 50 mm bed that was 163 Pa. After 20 h running the pressure drops in air flow through the filters m became about equal: 489 Pa in 100 mm thickness bed and 485 Pa in 50 mm thickness bed. Thereupon there was an inverse phenomenon. During 40 h after filter running the pressure drop in 50 mm thickness bed became value of 892 Pa and after 55 h it was 1263 Pa. These values considerable exceeds the appropriate values of 682 Pa and 810 Pa measured at the same period of time at the filter of 100 mm thickness bed. This phenomenon may be explained in the following way. The process of filtration of cottonseed dust particles followed by the deposition of particles in a layer on the frontal surface of the filter and partially by settling of small particles in the pore channels of the cottonseed layer. Then pressure drop in air flow through the filter includes at least two components: pressure drop on cottonseed bed properly (including the resistance of the grid supports the cottonseed in the filtration layer) and the added component formed by layer of deposited particles on frontal surface of the cottonseed bed. During the process of filtration the significance of each of the components permanently changed. At the time of beginning of the process of filtration (0 h) the pressure drop results of the resistance of cottonseed bed only (including the resistance of the grid supports the cottonseed in the filtration layer). So at the beginning of filtration process (0 h) the pressure drop in 100 mm thickness filters about two times larger in all samples then in filters of 50 mm thickness bed. In the process of growing of the deposited particles layer resistance of it became larger then the resistance of cottonseed bed layer.

If the dust concentration is higher and became 1.0 g/m^3, as it is shown in Table 6, there occurs the same phenomenon. But the equality of the pressure drop in case of 50 mm and 100 mm thickness bed happened earlier, during 15 h of running the filtration process. The value of pressure drop for case of 50 mm thickness bed was 504 Pa and for 100 mm thickness bed was 498 Pa. The effectiveness were 99.5% and 99.85% respectively.

By dust concentration of 1.0 g/m3 the maximal expedient pressure drop in case of 50 mm thickness bed had the value of 1133 Pa and the effectiveness of 99.9 % and took place after 35 h of the beginning

of filter test. The values of maximal expedient pressure drop of 1112 Pa and effectiveness of 99.89% for 100 mm thickness bed were occurred during 60 h after beginning of the test.

In opposite to previous cases the filtration process by dust concentration of 2 g/m^3 as it is seen from Table 7, characterized by special properties. As usual, at the beginning of the process (0 h) the pressure drop at the cottonseed bed filter of 100 mm thickness was two times larger then in case of 50 mm thickness. After 20 h of filter performance the values of pressure drop both for 50 and 100 mm thickness beds became about equal. For 50 mm thickness bed the pressure drop was 729 Pa and for 100 mm thickness it was 732 Pa. The effectiveness were 99.8% and 99.58% respectively. Thereafter the pressure drops in both cases had grown approximately in equal manner. The values of maximal expedient pressure drop for 100 mm thickness bed filters was 1176 Pa and for 50 mm thickness bed was 1181 Pa and they took place during equal period of time, 35 h from beginning of the test. The reached effectiveness in both cases was 99.90%.

Results of measurement of pressure drop and effectiveness of filter with thickness 150 mm by initial filtration velocity of 0.2 m/s is shown in Table 8. By dust concentration of 0.5 g/m^3 pressure drop during relatively long period of time of 50 h reached 565 Pa that is sufficient low compared to pressure drop values of 1116 Pa for 50 mm thickness and 764 Pa for 100 mm thickness layers. But at the same conditions the effectiveness of filter with thickness 150 mm remains 98.5% which was low compared to effectiveness of 99.6% and 99.2% for filters with thickness 50 mm and 100 mm correspondingly. By higher initial concentrations of dust in the air of 1.0 and 2.0 g/m^3 the pressure drop and effectiveness of filter with thickness 150 mm increased faster. After short period of time of 25h pressure drop in the filter reached 564 Pa and effectiveness 99.8% by concentration of 1.0 g/m^3. And by concentration of 2.0 g/m^3 the pressure drop achieved 690 Pa and effectiveness 99.9 % during 20 h of the filter testing.

The cottonseed filled bed filters were studied in hulling-separation workshop in real conditions at cottonseed oil mill in Uzbekistan. The significant technological operation is hulling of seeds and the separation of the kernel from its hull. There are aspiration systems that include of suction hoods of suitable construction, dust removing devices and ducts. Suggested in this research is the aspiration or

local exhaust systems from hulling-separation equipment, which are differentiated from the usual systems and contents of cottonseed filled bed filters, placed inside suction hoods of suitable construction. Result of this study is shown in Table 9.

Results of measurement of pressure drop and effectiveness of filter with thickness 50 mm by relatively high initial filtration velocity of 0.5 m/s is shown in Table 8. By different dust concentrations varied from 0.74 to1.89 g/m^3 pressure drop during short period of time of 24 h reached 1440 Pa. The effectiveness of filter increased from 97.11 to 99.43%.

Conclusions of air cleaning processes by cottonseed bed filters

1. The main objective pursued in this research to develop methods and devices which control dust particle emissions was performed. Our experiments showed that granular bed filters filled by cotton seeds provide good possibilities for adjustment of particle removal and air cleaning in local exhaust ventilation systems. The developed cottonseed filled bed filters support maintenance of low dust concentration, possibility of adjustment of air cleaning efficiency up to 99.9%, and the required resistance of filters. It leads to unnecessary additional dust-removing devices. It makes able to return of dust particles to raw material, to obtain an inexpensive filter filler as cottonseed, which was returned to the raw material after its filling with dust. Suggested in this research cottonseed filled bed filters placed in exhaust hoods makes possible development of principal new local exhaust ventilation systems.

2. In our experiments were studied 50, 100 and 150 mm thickness bed filters filled by cottonseed. The cottonseed filled filter by the dust concentration of 0.5 g/m^3 in air flow before filtration can be used during 55 h without changing of the seed fillers for 50 mm thickness bed filters and for 90 h for 100 mm thickness bed filters. The changing of the fillers was performed by maximal expedient pressure drop of 1000-1200 Pa. If the initial concentration of dust was 1.0 g/m^3 the necessity for renovation or changing of the filler took place 35 h after it using for 50 mm thickness bed filters and after 60 h for 100 mm thickness bed filters. For concentration of dust of 2 g/m^3 the duration of filters functioning without changing the filler both for 50 mm thickness and for100 mm bed filters became equal of 35 h. The reached effectiveness in both cases was 99.90%.

3. Study of cottonseed filled filters of 150 mm thickness by dust concentration 0.5 g/m^3 showed that during period of time of 50 h the effectiveness of the filter remains low, compared to the filter layers of 50 mm and 100 mm. By dust concentration of 1.0 g/m^3 the pressure drop in the 150 mm thickness filters increased fast achieving 564 Pa during 25 h, i.e. in relatively short period of time. When dust concentration arise to 2.0 g/m^3 the pressure drop increased during 20 h too fast achieving 690 Pa, i.e. during short period of time as well, compared to filter layers of 50 mm and 100 mm.

The peculiarities of pressure drop and effectiveness of the cottonseed filled bed filters of different thickness are explained by relation between the pressure drop in flow of the air at entry of the filter and in airflow in pores of filter depth of different thickness. The next reason is the relation between the pressure drop in the soft deposit of dust on the surface of the filter and pressure drop strictly in cottonseed filled layer of the filter.

Due to this discussion for practical aim is recommended application of cottonseed filled bed filters with thickness between 50 and 100 mm.

4. The usual aspiration systems possess some disadvantages: the particles of cottonseeds sucked into the hoods were transferred in ducts on relatively long distance, usually they are suspended in the ducts and often obstruct them. The particles of seeds become non-returnable to the raw material. The dust-removing devices i.e. cyclones did not always provide the required catching of dust and cleaning of air.

These shortcomings are eliminated by cottonseed filled bed filters placed immediately in suction hoods. Our experiments showed that granular bed filters, filled by particles of cottonseeds and placed in suction hoods solved many problems in aspiration systems, as maintenance of low particles concentration in ducts and elimination of duct obstruction; possibility of adjustment of air cleaning efficiency, resistance of filter, dust-holding capacity and the like. It makes able unnecessary additional dust-removing devices; removal of cottonseed elements near the technological equipment and providing for the return of dust particles to raw material; inexpensive filter fillers, that can be returned to the raw material after its filling with dust, etc.

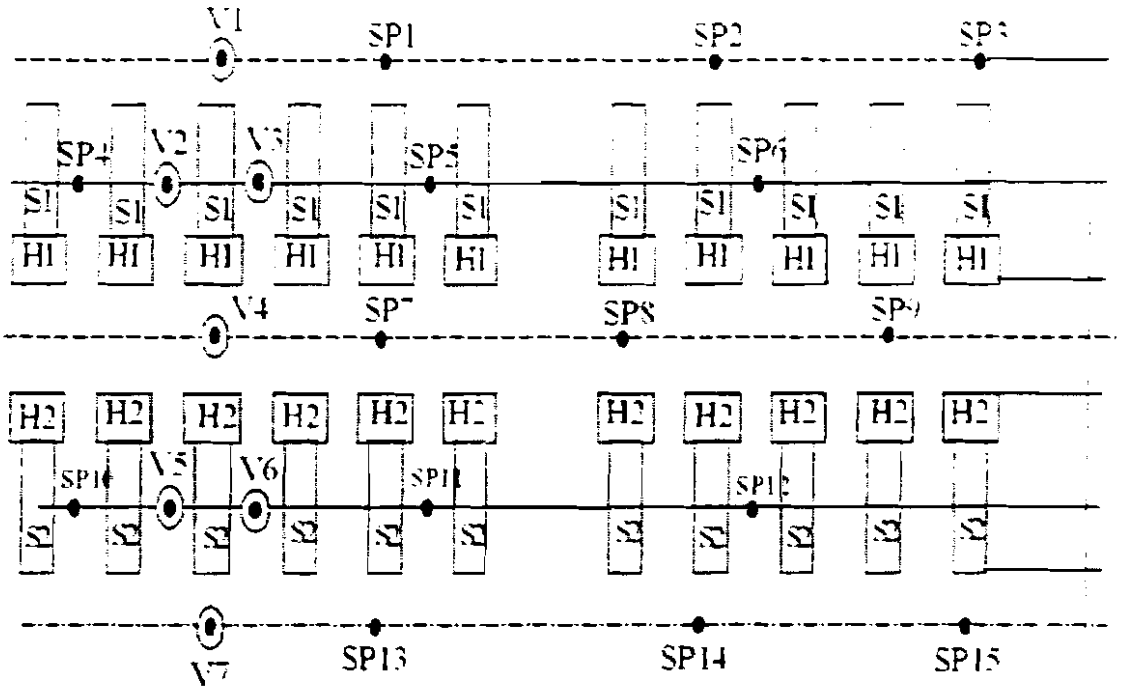

Figure 1. The second floor at the hulling–separation department. H1, H2, S1, and S2 are the first and second hullers and shakers, respectively. V(i) and SP (i) are the sampling locations of the vertical elutriators and the stationary personal samplers, respectively.

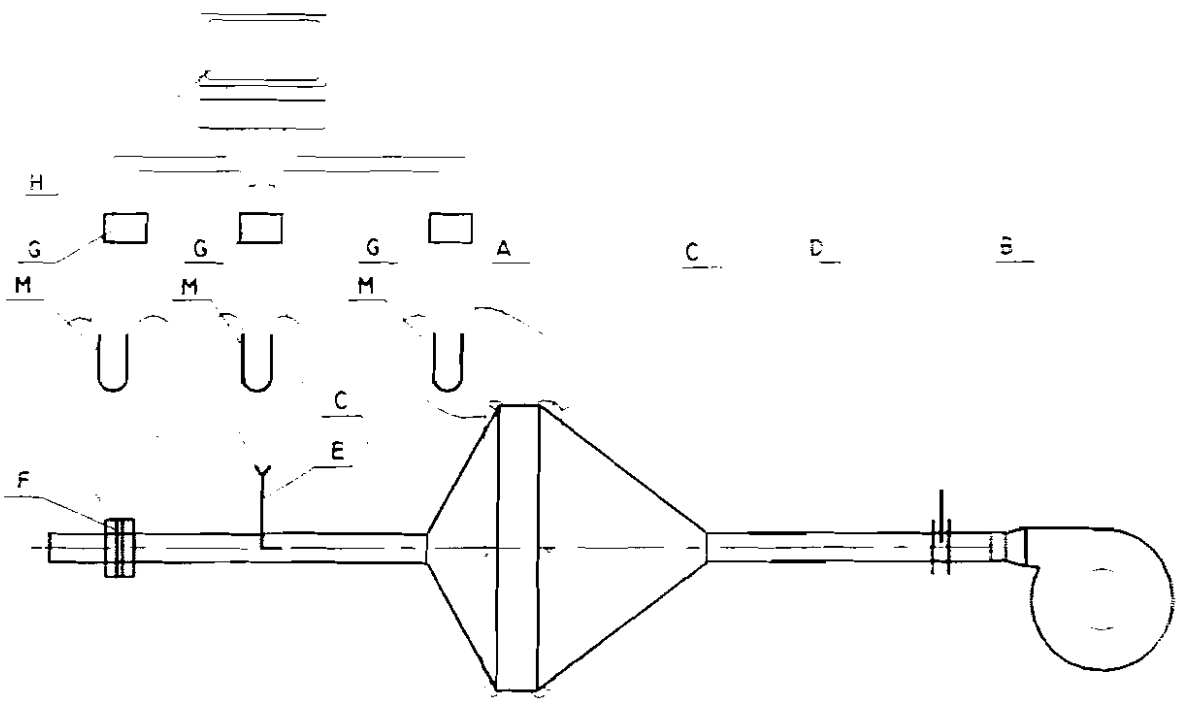

Fig. 2. Experimental installation for study of the pressure drop across granular bed filters filled by cottonseed particles; (A) studied filter; (B) fan; (C) ducts; (D) damper; (E) Pitot tube; (F) orifice flow meter; (G) pressure transducers; (H) computer; (M) U-manometers.

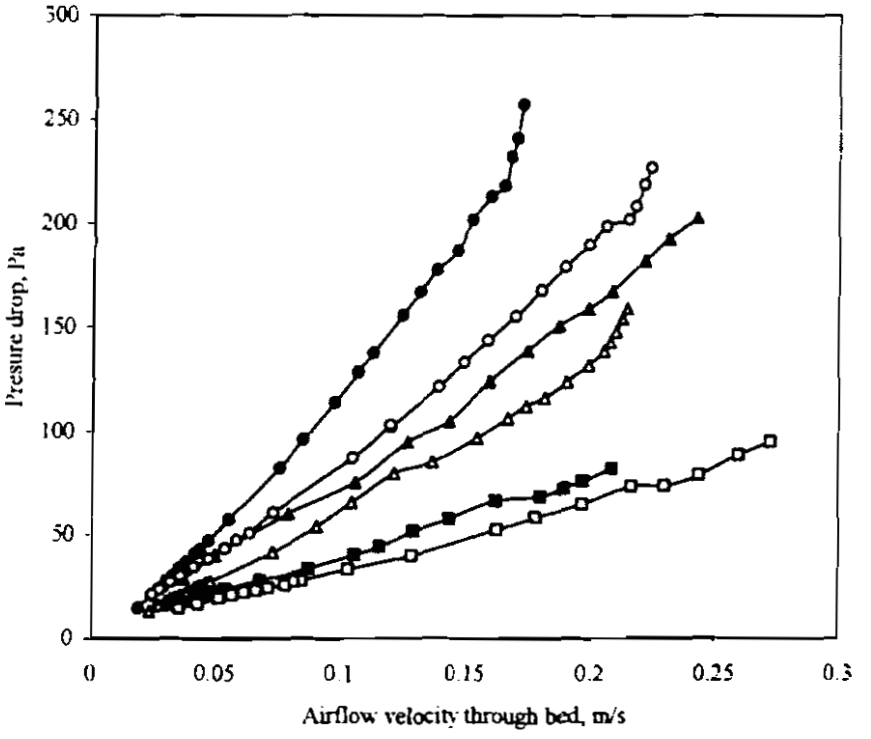

Fig. 3. Pressure drop as a function of the airflow velocity through a bed of fuzzy and bare cottonseed particles of different layer thickness: □, 50 mm layer of bare seed; ■, 50 mm layer of fuzzy seed; △, 100 mm layer of bare seed; ▲, 100 mm layer of fuzzy seed; ○, 150 mm layer of bare seed; ●, 150 mm layer of fuzzy seed

Table 1. Dust concentrations in the hulling–separation department at the sampling locations shown in Figure 1.

	Mass concentration of dust (mg/m^3)				
Sampler type	Vertical elutriator				
Sampler location	# of Samples	Mean	S.D.	Min	Max
V1	6	43,73	39.52	25	80.5
V2	6	28,91	25,34	23	35,3
V3	8	33,42	30,72	17	56,2
V4	7	26,59	24,81	23	33,4
V5	6	33,66	28,65	16	37,9
V6	7	38,64	35,27	14	70,7
V7	9	45,27	42,45	23	78,3
Average	49	36,11	32,11		
Stationary personal sampler					
SP1	3	149,8	146,22	123	172
SP2	3	133,5	130,62	118	143
SP3	3	133,5	130,34	100	150
SP4	3	147,2	142,65	130	170
SP5	3	142,3	140,94	137	166
SP6	3	137,4	134,53	123	143
SP7	3	113,7	109,43	104	135
SP8	3	127,4	125,24	96	145
SP9	3	123,3	120,42	97	156
SP10	3	138,9	136,62	132	141
SP11	3	157,7	155,74	149	168
SP12	3	149,4	147,55	134	163
SP13	3	139,6	137,56	118	157
SP14	3	143,3	141,38	111	171
SP15	3	132,8	129,86	96	149
Average	45	134,24	112,62		

Table 1. Dust concentrations in the hulling–separation department at the sampling locations shown in Figure 1. (Continuation)

Roving personal sampler				
# of Samples	Mass concentration of dust (mg/m^3)			
	Mean	S.D.	Min	Max
3	139,58	137,23	135,3	148,4
3	135,56	129,85	125,7	138,4
3	153,82	148,57	145,2	174,7
3	118,52	114,87	113,5	128,7
3	150,47	147,65	143,8	156,3
3	133,82	131,85	129,4	148,8
3	121,58	118,59	98,3	154,6
3	131,89	127,56	110,5	145,3
3	161,42	158,95	158,3	169,2
3	121,54	118,67	116,5	126,0
3	127,15	124,85	123,8	135,6
3	139,73	136,24	131,3	145,6
3	130,21	128,19	114,8	145,4
3	115,71	112,54	112,8	126,4
3	121,84	118,67	94,28	143,8
3	124,83	122,97	121,7	129,7
3	134,68	131,57	118,4	145,3
3	148,46	145,68	139,5	159,6
3	115,36	112,54	80,39	151,2
3	135,27	132,64	124	147,6
3	151,73	148,39	134,3	172,4
3	111,54	107,96	90,45	129,4
66				

Table 2: Size distribution of cotton dust particles collected by the vertical elutriator. Data are given in terms of frequency [%] and standardized frequency [% μm^{-1}].

Sampling		Bin size								Mean size [µm]
Point		0.5 – 1 [µm]	1 – 2 [µm]	2 – 4 [µm]	4 – 8 [µm]	8 – 16 [µm]	16 – 32 [µm]	32 – 64 [µm]	64 – 128 [µm]	
V1	[%]	25.73	31.73	18.34	11.79	4.50	4.12	3.79		5.27
	[% μm^{-1}]	51,46	31,73	9,17	2,95	0,56	0,26	0,12	0,00	
V2	[%]	18,59	23,07	22,97	19,23	7,47	4,15	3,57	0.95	6.85
	[% μm^{-1}]	37,18	23,07	11,49	4,81	0,93	0,26	0,11	0.01	
V3	[%]	17,82	25,95	22,78	13,32	9,35	6,13	3,62	1.03	7.33
	[% μm^{-1}]	35,64	25,95	11,39	3,33	1,17	0,38	0,11	0.02	
V4	[%]	18,69	28,43	15,68	13,18	11,76	6,82	4,45	0.99	7.96
	[% μm^{-1}]	37,38	28,43	7,84	3,30	1,47	0,43	0,14	0.02	
V5	[%]	23,20	33,15	15,70	9,94	8,84	4,34	3.32	1,51	6.88
	[% μm^{-1}]	46,40	33,15	7,85	2,49	1,11	0,27	0,10	0,02	
V6	[%]	23,15	27,18	16,13	12,83	12,65	5,04	3,02		6.01
	[% μm^{-1}]	46,30	27,18	8,07	3,21	1,58	0,32	0,09	0,00	
V7	[%]	25,80	27,27	16,14	14,90	8.50	4,22	3,17		5.54
	[% μm^{-1}]	51,60	27,27	8,07	3,73	1.06	0,26	0,10	0.00	

Table 3. Pressure drop and effectiveness of filter with thickness 50 mm

Time, h	Pressure drop and effectiveness of filter with thickness 50 mm, initial filtration velocity 0.2 m/s and different dust concentrations in air (included pressure drop of a grid ~105 Pa)					
	Concentration 0.5 g/m3		Concentration 1.0 g/m3		Concentration 2.0 g/m3	
	Pressure drop, Pa	Effective ness, %	Pressure drop, Pa	Effective ness, %	Pressure drop, Pa	Effective ness, %
0	189	96.6	190	98	190	98.8
5	223	96.8	262	99.1	286	99.2
10	294	97.7	376	99.3	395	99.6
15	406	98.2	504	99.5	542	99.8
20	485	98.4	686	99.6	729	99.8
25	592	98.5	831	99.7	855	99.9
30	674	99.1	984	99.8	1023	99.9
35	814	99.2	1133	99.9	1181	99.9
40	892	99.4				
45	1020	99.4				
50	1116	99.6				
55	1263	99.7				

BEST AVAILABLE COPY

Table 4. Pressure drop and effectiveness of filter with thickness 100 mm

Test duration, h	Pressure drop and effectiveness of filter with thickness 100 mm, initial filtration velocity 0.2 m/s and different dust concentrations in air (included pressure drop of a grid ~105 Pa)					
	Concentration 0.5 g/m3		Concentration 1.0 g/m3		Concentration 2.0 g/m3	
	Pressure drop, Pa	Effective ness, %	Pressure drop, Pa	Effective ness, %	Pressure drop, Pa	Effective ness, %
0	320	96.21	322	97.78	322	98.71
5	352	96.31	379	98.09	418	98.84
10	396	97.56	432	98.32	510	98.92
15	448	97.89	498	98.85	621	99.32
20	489	98.35	575	99.16	732	99.58
25	546	98.41	596	99.34	891	99.78
30	586	98.64	721	99.46	1040	99.86
35	634	98.62	762	99.59	1176	99.90
40	682	98.79	798	99.69		
45	728	99.12	876	99.75		
50	764	99.23	954	99.76		
55	810	99.32	1036	99.89		
60	862	99.48	1112	99.89		
65	895	99.53				
70	943	99.72				
75	979	99.81				
80	1032	99.88				
85	1085	99.89				
90	1140	99.89				

Table 5. Pressure drop and effectiveness of filter with thickness 50 mm and 100 mm and initial dust concentration 0.5 g/m3

Test duration, h	Pressure drop and effectiveness of filters by initial filtration velocity 0.2 m/s and dust concentration 0.5 g/m3 (included pressure drop of a grid ~105 Pa)			
	Filler thickness 50 mm		Filler thickness 100 mm	
	Pressure drop, Pa	Effective ness, %	Pressure drop, Pa	Effective ness, %
0	189	96.6	320	96.21
5	223	96.8	352	96.31
10	294	97.7	396	97.56
15	406	98.2	448	97.89
20	485	98.4	489	98.35
25	592	98.5	546	98.41
30	674	99.1	586	98.64
35	814	99.2	634	98.62
40	892	99.4	682	98.79
45	1020	99.4	728	99.12
50	1116	99.6	764	99.23
55	1263	99.7	810	99.32
60			862	99.48
65			895	99.53
70			943	99.72
75			979	99.81
80			1032	99.88
85			1085	99.89
90			1140	99.89

Table 6. Pressure drop and effectiveness of filter with thickness 50 mm and 100 mm and initial dust concentration 1.0 g/m3

Test duration, h	Pressure drop and effectiveness of filters by initial filtration velocity 0.2 m/s and dust concentration 1.0 g/m3 (included pressure drop of a grid ~105 Pa)			
	Filler thickness 50 mm		Filler thickness 100 mm	
	Pressure drop, Pa	Effective ness, %	Pressure drop, Pa	Effective ness, %
0	190	98	322	97.78
5	262	99.1	379	98.09
10	376	99.3	432	98.32
15	504	99.5	498	98.85
20	686	99.6	575	99.16
25	831	99.7	596	99.34
30	984	99.8	721	99.46
35	1133	99.9	762	99.59
40			798	99.69
45			876	99.75
50			954	99.76
55			1036	99.89
60			1112	99.89
65				
70				

Table 7. Pressure drop and effectiveness of filter with thickness 50 mm and 100 mm and initial dust concentration 2.0 g/m3

Test duration, h	Pressure drop and effectiveness of filters by initial filtration velocity 0.2 m/s and dust concentration 2.0 g/m3 (included pressure drop of a grid ~105 Pa)			
	Filler thickness 50 mm		Filler thickness 100 mm	
	Pressure drop, Pa	Effective ness, %	Pressure drop, Pa	Effective ness, %
0	190	98.8	322	98.71
5	286	99.2	418	98.84
10	395	99.6	510	98.92
15	542	99.8	621	99.32
20	729	99.8	732	99.58
25	855	99.9	891	99.78
30	1023	99.9	1040	99.86
35	1181	99.9	1176	99.90
40				
45				

Table 8. Pressure drop and effectiveness of filter with thickness 150 mm

Test duration, h	Pressure drop and effectiveness of filter with thickness 150 mm, initial filtration velocity 0.2 m/s and different dust concentrations in air (included pressure drop of a grid ~105 Pa)					
	Concentration 0.5 g/m3		Concentration 1.0 g/m3		Concentration 2.0 g/m3	
	Pressure drop, Pa	Effective ness, %	Pressure drop, Pa	Effective ness, %	Pressure drop, Pa	Effective ness, %
0	252	96.1	266	95.9	369	96.6
5	372	96.2	406	96.8	505	97.7
10	410	96.4	465	97.4	562	98.6
15	465	96.5	492	98.3	610	99.9
20	485	96.7	543	99.1	690	99.9
25	488	96.9	564	99.8		
30	490	97.1				
35	492	97.4				
40	496	97.8				
45	508	98.2				
50	565	98.5				
55						

Table 9. Pressure drop and effectiveness of filter with thickness 50 mm

Test duration, h	Pressure drop and effectiveness of filter with thickness 50 mm, initial filtration velocity 0.5 m/s and different dust concentrations in air (included pressure drop of a grid ~105 Pa)			
	Pressure drop, Pa	Dust particles concentration, g/m3		Effectiveness, %
		In airflow before the filter	In airflow beyond the filter	
0	212	1.32	0.036	97.11
2	268	1.32	0.034	96.68
4	346	1.89	0.036	98.09
6	520	1.74	0.018	98.31
8	930	0.88	0.012	98.64
10	1050	1.03	0.010	98.83
12	1110	0.74	0.006	99.29
14	1180	1.09	0.006	99.45
16	1260	0.81	0.007	99.14
18	1340	0.86	0.006	99.19
20	1360	1.18	0.008	99.75
22	1440	1.36	0.007	99.48
24	1440	1.42	0.008	99.43

F) Impact, Relevance, and Technology Transfer: An impact was rendered in methods of air contamination control in industrial workshops with scientific and practical aims. The acquired knowledge and experience are very useful in implementation of air pollution control in industrial, civil and agricultural buildings in Uzbekistan. Especially it's related to Cottonseed Oil Mill Industry. The number of population of Uzbekistan is about 24 million. The seed oil industry of Uzbekistan processes about 2 million ton seeds every year. The industry consists of more than 20 large mills with a daily output of 800-1200 ton seed each. The processes of handling of seeds (such as weighing, hulling, separation, preparation for extraction, handling of cottonseed cake and the like) result in large emission of dust particles, both inside the mill and to outside environment.

Joint scientific collaboration in solution of dust removing and air cleaning problems made the Uzbekistan researchers acquainted with modern methods and procedures of experimental and theoretical study of filters for cleaning of air.

Uzbekistan collaborators used the purchased experience and knowledge in teaching and in scientist research work with students. The results of the project were used in training of students in methods of physical and mathematical modeling of dust catching processes in bed filters.

Collaborating on the joint paper published in scientific journal "Biosystems Engineering" added to the Uzbekistan researchers experience for publishing in international scientific journals.

The results of investigation of cottonseed filled bed filters were used in design of ventilation systems for hulling-separation departments of Cottonseed oil mills. The obtained measurement data were used for estimating the potential occupational exposure to cotton dust of workers in the hulling-separation rooms of cottonseed oil mills.

G) Project Activities/Outputs:

1) Dr. Yu. Rashidov, Head of Heating, Vetilation and Air Conditioning Department in Architectural-Building Institute of Tashkent, involved as a senior researcher in the Project, visited in June, 2001 to Technion (Israel), to Israel Oil Seed Mills, to Israel Institute for Occupational Safety and Hygiene, and to Laboratory of Air Pollution in Israel Ministry of Labor.

Co-Principal Investigator Dr. S. Tabak (Technion) in August 2000 visited to Prof. G. Tardos in the laboratory for dust particles measurement and agglomeration tools at City University of New York (NY).

Dr. S. Tabak visited in September, 2002 and 2003 to Distinguished Professor R. Pfeffer in New Jersey Institute of Technology (NJIT), A Public Research University, Department of Chemical Engineering, Chemistry and Environmental Science, New Jersey Institute of Technology, University Heights, NEWARK, NJ 07102-1982.

2) List of training.

According to the Project workplan the Uzbekistan collaborator (Dr. Yu. Rashidov) got training in Technion-Israel Institute of Technology. Also we got an agreement with one of the Oil Seed Mills here in Israel in order to train the Uzbekistan collaborators to use the bought research tools for concentration and particulate size distribution measurements in workshop conditions. We have accomplished the mentioned experiments and training.

We arranged also the training of Uzbekistan collaborators in Israel Institute for Occupational Safety and Hygiene, and in Laboratory of Air Pollution in Israel Ministry of Labor how to use the experimental tools.

Dr. S. Tabak contacted the laboratory for dust particles measurement and agglomeration tools at City University of New York (NY). During the visit to the laboratory (August, 2000) Dr. S. Tabak have been acquainted with the measurement tools and their functioning. We needed according to the workplan of the Project to study of the particles size distribution of dust of cottonseeds and their elements (kernels, hulls, etc).

Dr. S. Tabak visited to Prof. Robert Pfeffer in New Jersey Institute of Technology and got discussion and consultations in mathematical modelling, analysing of the research data, and, especially, advises in preparing of a paper for scientific journal. The paper was published in scientific journal "Biosystem Engineering". We wish to thank Prof. Robert Pfeffer of the New Jersey Institute of Technology, Newark, NJ for many insightful technical discussions during the progress of this research.

3) A joint paper named "Airflow through Granular Beds packed with Cottonseeds" of Israel and Uzbekistan collaborators B. Askarov, U. Rashidov as co-authors was published in scientific journal "Biosystem Engineering", Volume 88, Issue 2, June 2004, Pages 163-173. (Reprint is enclosed).

H) Project Productivity: The project accomplished all of the proposed goals.

I) Future Work: The performed project made an enormous contribution in possible future collaboration between scientists of U.S.A., Israel and Uzbekistan. The implementation of this Project became a fruitful and productive scientific collaboration between Israel and Uzbekistan researchers. The collaboration became useful for both sides, especially for Uzbekistan, which got acquainted with modern and state-of-the art scientific methods and equipment, using new technology for measurement, acquisition, preparation and presentation of scientific data. Continuation of the scientific collaboration is unvalued and desirable by both Uzbekistan and Israel sides. We hope the CDR/CAR Fund will be renewed and will help in continuing of this collaboration.

Acknowledgments: Israel and Uzbekistan collaborators wish to thank the U.S.-Israel Cooperative Development Research Program, Economic Growth, U.S. Agency for International Development for support in this fruitful international scientific collaboration

J) Literature Cited:

ACGIH (1983). Air sampling instruments, 6th ed. American Conference of Governmental Industrial Hygienists, Cincinnati, OH

ACGIH (1988). Advances in air sampling. American Conference of Governmental Industrial Hygienists, Cincinnati, OH.

ASME (1971). Fluid meters: Their theory and application. Edited by H. S. Bean. 6ed. Report of ASME Research Committee on Fluid Meters

ASME (1972). Application of fluid meters, Part II, 6th ed. (Interim Supplement 19.5 on Instruments and Apparatus). Standard PTC 19.5-72. ASME, New York

ASHRAE (2001). Handbook of Fundamentals. Measurement and Instruments. Chapter 14. ASHRAE Inc. Atlanta, GA.

ASHRAE (2000). Air Cleaners for Particulate Contaminants. ASHRAE Handbook 1992, HVAC Systems and Equipment, Chapter 24.

ASHRAE.2000. Industrial Gas Cleaning and Air Pollution Control. ASHRAE Handbook 1992, HVAC Systems and Equipment, Chapter 25.

ASHRAE (1999). Handbook of Applications. Industrial Local Exhaust Systems. Chapter 29. ASHRAE Inc. Atlanta, GA.Chapter 25

ASHRAE (1992). Methods of testing air cleaning devices used in general ventilation for removing particulate matter. ASHRAE Standard 52-1.

Allen T. (1990) Particle Size Measurement. London, New York, Tokyo, Melbourne, Madras: Chapman and Hall,

Anon (1975). Innovative design concepts for greater efficiency used in lint and separating room installation at Sweetwater Cotton Oil. Oil-Mill-Gazetteer 79(9): 16-18.

Bailey A E; Hilditch T P; Longenecker H E; Markley K S (1948). Cottonseed and Cottonseed Products. Interscience Publishers, Inc. New York

Bernhardt C (1994). Particle Size Analysis. London, Glasgow, Weinheim, New York, Tokyo Melbourne, Madras

Boubel R W; Fox D L; Turner D B; Stern A C (1994). Fundamentals of Air Pollution. 3rd edition. Academic Press, San Diego, CA. Godish, Thad.

Bethea R M (1981). Controlling dust in oil mills. Oil-Mill-Gazetteer 86(4): 14-18.

Carman P C (1997). Fluid flow through granular beds. Chemical Engineering Research and Design, Transactions of the Institute of Chemical Engineering, 75 n Suppl Dec 1997, S32-S48

Clark S P (1977). Hulling-separating cottonseed without delintering. Journal of the American Oil Chemists Society, **54**(7), 286-288

Clark S P; Johnson L A (1981). Effects of residual cottonseed linters on hulling- separating and preparation for extraction. Oil-Mill-Gazetteer, **86**(5), 34-37

Coulson J M; Richardson J F; Backhurst J R; Harker J H (1991). Chemical Engineering. Pergamon Press. Oxford, New York, Seoul, Tokyo

Dairo O U; Ajibola O O (1994). Resistance of Airflow of Bulk Sesame Seed. Journal of Agriculture Engineering Research, **58**, 99-105

Dennis R (1976). Handbook on Aerosols. Technical Information Center, Energy Research and Development Administration, Oak Ridge, TN Pub. No. EPA/600/P-95/001bF

Devies C N (1973). Aerosol Filtration. Academic Press, London

Dietz P W (1981). Electrostatic filtration of Inertialess Particles by Granular Beds. J. Aerosol Sci. **12**(1), 27-38

Dorman R G (1974). Dust Control and Air Cleaning. Pergamon Press, New York

EPA (1984). Quality assurance handbook for air pollution measurement systems. Report No. EPA-600/4-77-27b, Environmental Protection Agency, Washington, D.C.

EPA (1996). Environmental Protection Agency: Air Quality Criteria for Particulate Matter, vol. I. EPA Pub. No. EPA/600/P-95/001bF

EPA (2003) Electronic Code of Federal Regulations (40CFR-Chapter 1-Part 60. Appendix A. Method 5)

43 Fed. Reg. 27351. Occupational Safety and Health Administration: occupational exposure to cotton dust; final mandatory occupational safety and health standards. Codified at 29 CFR 1910.1043 (1978), and 50 Fed. Reg. 51120. Occupational Safety and Health Administration: occupational exposure to cotton dust; final rule. Codified at 29 CFR 1910.1043 (1985)

Floyd C W (1977). Environmental dust control in cottonseed oil mills. Oil-Mill-Gazetteer **82**(4): 13-15

Fuchs N A (1973) Mechanics of Aerosols. Pergamon Press. Oxford

Gutfinger C; Pnuebi D; and Fichman M (1988). Effect of Particle Loading on Granualr Bed Filtration- Extension of the CEF Model to Polydisperse Systems, J. Aerosol Sci. **19**(4) 443-450

Grochulska Segal E M; Sozanski M M (1987). Parameters of Filtration Process on Multimedia Filter Beds. J. Environ. Prot. Eng, **13**(2), 27-39

Hinds W C (1999). Aerosol Technology. Properties, Behavior, and Measurement of Airborne Particles. John Wiley & Sons, Inc., New York , NY

Hughs S E; Smith D W and Urquhart N S. (1981). Methodology for cotton gin sampling. Am. Ind. Hyg. Assoc. J. **42** (6): 407-410.

ISO (1991). Measurement of fluid flow by means of pressure differential devices, Part 1: Orifice plates, nozzles, and Venturi tubes inserted in circular cross-section conduits running full. ISO Standards 5167-1:1991(E)

ISO (1998). Measurement of fluid flow by means of pressure differential devices, Part 1: Orifice plates, nozzles, and Venturi tubes inserted in circular cross-section conduits running full. Reference number: ISO Standards 5167-1:1991/Amd.1:1998(E)

Jones R N; Carr J; Glindmeyer H; Diem J and Weill H. (1977). Respiratory health and dust levels in cottonseed oil mills. Thorax 32: 281-286.

Lapple C E (1956) Fluid and Particle Mechanics. Published by University of Delaware.

Lear D H (1985). Controlling dust in cottonseed and soybean mills. Oil-Mill-Gazetteer. **89**(12). 36-40, 42

Mark, D. and Vincent, J.H. "A New Personal Sampler for Airborne Total Dust in Workplaces." Ann. Occup. Hyg. Vol. 30 (1986), pp. 89-102.

Masus M; Malgin A; Morgulis M (1985). Filters for Industrial Dust Removing. Mashinostroenie, Moscow

Matlock S W; Wiederhold L R; Parnel C B (1976). Particle sizing of dust found in cottonseed oil mill. Transactions of the ASAE, **19**(5), 970-976

Mohsenin N N (1986). Physical Properties of Plant and Animal Materials. Gordon and Breach Science Publishers, Inc. New York, London, Paris, Montreux, Tokyo

Morey P R (1981). Bract and leaf in the process stream in cottonseed oil mills. Am. Ind. Hyg. Assoc. J. (**42**) March: 244-246.

OSHA (1985). 50 Fed. Reg. 51120. Occupational Safety and Health Administration: occupational exposure to cotton dust; final rule. Codified at 29 CFR 1910.1043

Otany Y; Kanaoka C; Emi H (1989). Experimental Study of Aerosol Filtration by the Granular Bed over a Wide Range of Reynolds Numbers. Aerosol Science and Technology, **10**(3), 463-474

Pagano A M; Crozza D E; Nolasco S M (2000). Airflow resistance of oat seeds: effect of airflow direction, moisture content and foreign material. Drying Technology,**18**(1&2),457-468

Parnell C B (1980). Design of cyclone collectors to minimize dust emissions. Oil-Mill-Gazetteer 85(4): 16-13

Parnel C B; Gracy J A; Clark C P; Norman B M (1982). Engineering controls to lower dust level in cottonseed oil mills. Transactions of the ASAE, **25**(1), 170-174

Peukert W; Loeffler F (1988). Zur Abscheidung von Staub und Gasfoermigen Schadstoffen in einem Schuettschichtfilter (Simultaneous Removal of Gases and Solids in a Granular Bed Filter). Staub-Reinhaltung der Luft **48**(10): 379-386

Peukert W; Loeffler F (1991). Untersuchungen zum Einsatz von Schuettschichtfiltern in einem Aluminiumunschmelzwerk, Staub-Reinhaltung der Luft **51**(10), 345-351

Rylander R, P. Morrey and R. Bethea. (1983). Endotoxin content in cottonseed oil mill dust. . Am. Ind. Hyg. Assoc. J. 44 (5) March: 330-332.

Shapiro M; Gutfinger C; Laufer G (1988). Electrostatic Mechanisms of Aerosol Collection by Granular Filters. A review, J. Aerosol Sci., **19**(6), 651-677

Sigsgaard T; Pedersen O F; Juul S (1992).Respiratory disorders and atopy in cotton, wool, and other textile mill workers in Denmark. Am. J. Ind. Med. 22, 163–184

Smith K J (1975). Status of cottonseed oil mills compliance with environmental and safety regulations. Oil-Mill-Gazetteer, **79**(11), 36-38

Sporenberg F; Weber E; Goetsh E (1982). Untersuchungen zur Absheidung von Stauben mit Schuttschichtfiltern. Staub-Reinhaltung der Luft, **42** (2): 43-47

Steele, L. D. (1982). Controlling dust in an oil mill. Oil-Mill-Gazetteer 87(6): 10-12.

Streich E; Fissan H (1988). Sand Bed Filtration of Aerosols Contained in the Waste Gas from Iron Oresintering Processes. Staub-Reinhaltung der Luft, **48**(78), 281-287(1988).

Strid, P. (1973). Dust control system and problem. Oil-Mill-Gazetteer 78(2): 38–40.

Strauss W (1976). Industrial Gas Cleaning. Pergaman Press,Oxford

Steele L D (1982). Controlling dust in an oil mill. Oil-Mill-Gazetteer, **87**(6), 10-12

Tabak S (1969). Separation of Bare Cottonseeds Thesis (Ph.D), Polytechnic University, Tashkent

Tabak S (1989a). Fundamentals of Low-Waste Technology for Preparatory Operations in Cottonseed Oil Production. Thesis (Dr. Sc.), All-Union Scientific Institute of Oil Production, Leningrad, USSR

Tabak S; Chernenko T; Glushenkova A (1989). Lipid composition of oil component in dust. J. Chem. Nat. Comp. 3, 142–143

Tabak S; Wolf D (1998). Aerodynamic properties of cottonseed. Journal of Agriculture Engineering Research, **70**(3), 257-265

Tabak S I; Biran A B; Tabak I; Manor G (2002). Airflow induced by falling cottonseed particles. Biosystems Engineering, **81**(4), 395-405, doi:10.1006/bioe.2001.0037

Tabak S I; Askarov B A; Rashidov U; Tabak I; Manor G (2004). Airflow through Granular Beds packed with Cottonseeds. Biosystems Engineering, **88**(2), 163-173, doi:10.1016/biosystemseng.2004.002.003

Tardos G I (1997). Separation of airborn dust in deep-bed filtration. In book: Advances in Aerosol Filtration. Edited by Kvestoslav R. Spurny. Lewis Publishers. Boca Raton, Boston, London. New York, Washington D.C.

Tien C (1989). Granular Filtration of Aerosols and Gidrosols. Butterworth. Boston

Tomany J P (1975). Air pollution: the emissions, the regulations, & the controls. American Elseiver Publishing Company, Inc, New York, London, Amsterdam

Vavilov V; Durov V; Stepanets L Dust Control of Dry Process Kiln Waste Gas by Means of Granular Bed Filters, Cement 1988, **660**(6): 10-11

Whitby K T; Algen A B; Jordan R C (1955). Size distribution and concentration of airborne dust. Heatig, Piping and Air Conditioning **27**,121

Zey J N; Piacitelli G M; Gones W G (1984).Characterization of airborne cotton dust concentrations in the non-textile cotton industry. Am. Ind. Hyg. Assoc. J. 45(8): 538–546

Biosystems Engineering (2004) **88** (2), 163–173
doi:10.1016/j.biosystemseng.2004.02.003
PH—Postharvest Technology

Available online at www.sciencedirect.com
SCIENCE DIRECT®

ELSEVIER

Airflow through Granular Beds packed with Cottonseeds

S. Tabak[1]; B. Askarov[2]; U. Rashidov[2]; I. Tabak[3]; G. Manor[1]; I. Shmulevich[1]

[1]Civil and Environmental Engineering Department, Faculty of Agricultural Engineering, Technion-Israel Institute of Technology, Technion City, Haifa 32000, Israel; e-mail of corresponding author: agritabak@technion.ac.il
[2]Department of Civil Engineering, Tashkent Architectural Building Institute, 13, Navoi Str. Tashkent, 700011, Uzbekistan
[3]RAM Engineering Inc., 261 Route 46 W, Elmwood Park, NJ 07407, USA; e-mail: ilyatabak@yahoo.com

Received 10 June 2003; accepted in revised form 9 February 2004; published online 17 April 2004

The study is concerned with local exhaust ventilation systems for dust control in the hulling-separation process in cottonseed oil mills. Experiments were carried out to study the parameters that influence the pressure drop and mean velocity of airflow through a packed bed of cottonseeds, both bare and fuzzy. The experimental facility included a blower, ducts, and a granular bed filter filled with cottonseeds connected to the ducts. An orifice flowmeter and a Pitot tube were installed in the duct and connected to electronic pressure transducers. A transducer was also used for measurements of the pressure drop across the packed bed filters. The pressure transducers were connected to a computer with data acquisition software. The parameters varied during the experiments were the presence and absence of cottonseed fuzziness, the layer thickness of the packed cottonseeds, and the airflow rate. The measured data showed that pressure drop increases with increasing airflow rate, presence of fuzziness of the cottonseeds and thickness of the bed layer. An equation that relates the pressure drop to the airflow rate is proposed based on the Carman equation and coefficients obtained by regression analysis. Graphs plotted in accordance with this correlation equation compare favourably with most of the measured data.

© 2004 Silsoe Research Institute. All rights reserved
Published by Elsevier Ltd

1. Introduction

In some parts of the world, cottonseed is an essential source of vegetable oil. As well as producing oil for human consumption, cottonseed oil mills produce a number of other by-products: the hulls left over after hulling-separation processes of the cottonseeds, the cottonseed cake, left over after the extraction of oil from cottonseed meats, *etc*. The hulls and the cottonseed cake are used as a feed for livestock. The hulling-separation processes of the cottonseeds are accompanied by considerable dust emanation in the environment. The dust contains fine particles of cottonseed meats and hulls and may pose an occupational hazard (Matlock *et al.*, 1976; Parnel *et al.*, 1982; Tabak, 1989; Tabak *et al.*, 2002b). This study is concerned with dust control in hulling-separation processes in cottonseed mills. Local exhaust ventilation systems (ASHRAE, 1999) are normally the most effective method of controlling air pollutants: capturing pollutants at or near their source is the only way to ensure compliance with threshold limit values (TLVs) in the worker's breathing zone.

In oil production, most cottonseed processing operations, such as storage, drying, cleaning of seeds, and separation of meats from hulls use airflow. Pneumatic conveying of by-products plays an important role in handling and processing of cottonseeds. Cottonseeds used for oil production have different lint contents (0–14%). Accordingly, the cottonseeds may be divided into three groups, namely: bare cottonseeds with lint content of 0–1% by mass; semi-fluffed cottonseeds with lint content of 1–2·5%; and fuzzy cottonseeds with lint content higher than 2·5%.

The bare cottonseeds resemble an ellipsoid of rotation whose cross-sectional diameter reaches a maximum slightly off centre. The bare cottonseed has a body with a smooth surface texture and is able to flow smoothly. Fuzzy cottonseeds tend to adhere together with short staples that essentially affect their aerodynamic properties. Owing to the method of lint removal and residual

 © 2004 Silsoe Research Institute. All rights reserved
Published by Elsevier Ltd

43

Notation

A	total cross-sectional area of the bed, m^2
A_2	orifice area, m^2
a,c	coefficients
B	permeability coefficient for the bed, and depends only on the properties of the bed
b,d	exponents
D_1	pipe diameter, m
D_2	orifice diameter, m
d	diameter of particle, m
d_p	equivalent diameter of particle, m
d_t	diameter of the tube, m
d'_m	equivalent diameter of the pore channels, m
e	fractional voidage of the bed, voidage, or porosity
K	constant depending on the physical properties of the bed and fluid
K_1	correction factor of the orifice flowmeter
K'	dimensionless constant whose value depends on the structure of the bed
K''	Kozeny's constant
l	thickness of the bed, m
l_t	length of the tube, m
l'	length of channel, m
ΔP	pressure difference of across the bed, Pa
$(p_1 - p_2)$	pressure drop in the orifice flowmeter, Pa
Q	discharge flow rate, $m^3 s^{-1}$
Q_a	airflow rate in local exhaust ventilation system, $m^3 s^{-1}$
Q_e	airflow rate induced by falling bulk materials, $m^3 s^{-1}$
Q_h	airflow rate arisen by huller working elements, $m^3 s^{-1}$
Q_s	airflow rate sucked through the technological openings and chinks in housing of enclosure, $m^3 s^{-1}$
R_1	component of the drag force per unit area of particle surface in the direction of motion, N m^{-2}
Re	Reynolds number of particles
Re_1	modified Reynolds number
$S_{s,particle}$	specific surface area of the particles, $m^2 m^{-3}$
$S_{particle}$	surface area of the particles when the particles are packed in the bed, m^2
$S_{s,bed}$	specific surface area of the bed, $m^2 m^{-3}$
S_{bed}	surface area of the bed presented to the fluid, m^2
u	average velocity of flow of the fluid, defined as $(1/A)(dV/dt)$, $m s^{-1}$
u_1	average velocity through the pore channels, $m s^{-1}$
u_t	terminal velocity of particle, $m s^{-1}$
V_{bed}	volume of the bed, m^3
$V_{particle}$	volume of the particles, m^3
V	volume of the fluid flowing in time t, $m^3 s^{-1}$
β	ratio of the orifice diameter D_2 to the pipe diameter D_1
μ	dynamic viscosity of the air, $kg m^{-1} s^{-1}$
ρ	density of air, $kg m^{-3}$

lint content, fuzzy cottonseeds are approximately spherical.

Interaction between airflow and a fuzzy seed is a very complicated process. It is difficult to reduce excess pressure drag or frictional drag because as the airflows through the staples. The drag coefficients of both fuzzy and bare cottonseeds, have been determined in previous experiments (Tabak, 1989; Tabak & Wolf, 1998).

The sizes of cottonseed, cottonseed hull, and meat particles are within the limits of 10^{-3}–10^{-2} m (Tabak & Wolf, 1998) and the Reynolds number Re in pneumatic separation and pneumatic conveying, defined by the following equation, is usually in the range of 10^3–2×10^4:

$$Re = \frac{u_t d_p \rho}{\mu} \tag{1}$$

where: d_p is the equivalent diameter of particle in m; u_t is the terminal velocity of particle in $m s^{-1}$; ρ is the density of air in $kg m^{-3}$; and μ the dynamic viscosity of air in $kg m^{-1} s^{-1}$.

1.1. *Cottonseed oil mill processing and emissions*

The handling and processing of cottonseed at cottonseed oil mills result in particulate matter (PM) emissions. A cottonseed oil mill uses several main processes where dust may pose an occupational hazard (Parnel *et al.*, 1982; Bailey *et al.*, 1948; Lear, 1985; Matlock *et al.*, 1976; Smith, 1975; Tabak, 1989). Cleaning, delinting, hulling of seeds, separation of meats from hulls, and rolling of meats before extraction of oil; and pneumatic conveying of by-products contribute considerably to dust emission. A significant dispersion of cottonseed cake dust into the environment occurs in the processes of handling and displacement.

To prevent occupational exposure leading to byssinosis and other disabling respiratory diseases, the cotton

44

industries are required to comply with the occupational safety and health standards promulgated under the Occupational Safety and Health Act of 1970. In the Act, the National Institute for Occupational Safety and Health (NIOSH) was authorised to develop and establish recommended occupational safety and health standards, and to conduct research and experimental programmes for developing and improving the criteria for occupational safety and health standards. Specific to the cotton industries, employers are required to limit the amount of respirable cotton dust in the air by utilising dust control measures, *i.e.* efficient ventilation, enclosing the process equipment and placing it under negative pressure.

The current Occupational Safety and Health Administration (OSHA) permissible exposure limits (OSHA PEL) for cotton dust (raw) in the cotton industries range from 0·2 to 1 mg m^{-3}. These values represent a time-weighted average (TWA) concentration that must not be exceeded during any 8 h work shift in a 40 h working week. The NIOSH recommended exposure limits (RELs) for cotton dust (raw), representing the highest allowable airborne concentration that is not expected to injure workers, is set at 0·2 mg m^{-3}, based on a TWA for up to 10 h each day during a 40 h week. The American Conference of Governmental Industrial Hygienists (ACGIH) also set the TLV for cotton dust at 0·2 mg m^{-3} (ACGIH, 1988). The TLV represents a cotton dust concentration to which it is believed that workers may be regularly exposed, without developing adverse health effects. Although for cotton dust, of the three indoor occupational exposure limits outlined, only the OSHA PEL has an enforcement power as a legal standard. Therefore, it is noteworthy that although OSHA PELs for cotton dust exist for specific operations and industries, there is as yet no specific exposure limit for cotton dust in cottonseed oil mills.

The problems of dust dispersion and need for air cleaning at cottonseed oil mills are influenced by the machinery, the amount of equipment enclosure, and the characteristics of aspiration and local exhaust ventilation systems (ASHRAE, 1999; Bailey *et al.*, 1948; Tabak, 1989; Clark & Johnson, 1981; Clark, 1977; Steele, 1982; Tabak *et al.*, 2002a).

Smith (1975) showed a high content of fine particles in dust-laden air taken from cottonseed processing equipment in oil mills and discussed the application of air pollution control equipment such as cyclones or even fabric filters.

Steele (1982) reported on theoretical and practical approaches for minimising workplace environmental dust. The dust escaping during the sand and dirt removal processes for the cottonseed was discussed. An engineering solution was proposed for collecting dust in the hulling-separation room, which allowed dust levels to be minimised to 1·8 mg m^{-3}.

Lear (1985) stressed the importance of designing dust control, which includes the following two aspects. First, the operation must be enclosed as much as possible while allowing for all necessary maintenance and observation. Then suction must be applied at the most suitable point and in sufficient quantity to place the entire operation under negative pressure. These measures will prevent the dust from escaping into the working environment.

According to previous works (Matlock *et al.*, 1976; Tabak, 1989), the highest quantity of PM generated inside the mill is in the handling, separation, and delintering areas. In relation to the hulling-separation processes, Parnel *et al.* (1982) noted that the hulling and separation rooms consistently seemed to have high dust concentrations relative to the rest of the mill. Dust content in the air causes two major problems: pollution of the environment and loss of raw material.

1.2. *Dust control in cottonseed mills*

This study is concerned with dust control in hulling-separation processes in cottonseed mills. A local exhaust ventilation system for hulling-separation units with a proper airflow rate is able to prevent dispersion of dust into the inner environment of the workshop. The airflow rate Q_a in m^{3}s^{-1} in local exhaust ventilation systems includes several components (*Fig. 1*). These components are the airflow rate brought up by the working elements of hulling machines Q_h, the airflow rate sucked through the technological openings and chinks in the housing of the enclosure Q_t, and the airflow rate induced by bulk materials falling in chutes Q_{c1} and Q_{c2}. The hulling-separation unit (*Fig. 1*), equipped with a local exhaust or aspiration system, includes the huller (A), separator (B) with upper (C) and lower sieve (D), enclosing hood (E), duct (F), chute for hulls (G), and chute for meats (H). In the local exhaust ventilation system, the hoods were joined by vertical ducts feeding into a long horizontal duct connected to a cyclone, which is connected to a ventilator. This system has some disadvantages, *e.g.* the particles sucked into the hoods are transferred in the ducts for a relatively long distance so that the horizontal ducts are very frequently obstructed by the settled particles. This ultimately leads to the failure of the ventilation system. Another disadvantage is the relatively low collection efficiency of the cyclones.

Tabak (1989) suggested a solution to the aforementioned problems. Instead of cyclones located at the end of the local exhaust ventilation system, cottonseed-filled bed filters were placed in each suction hood. This

45

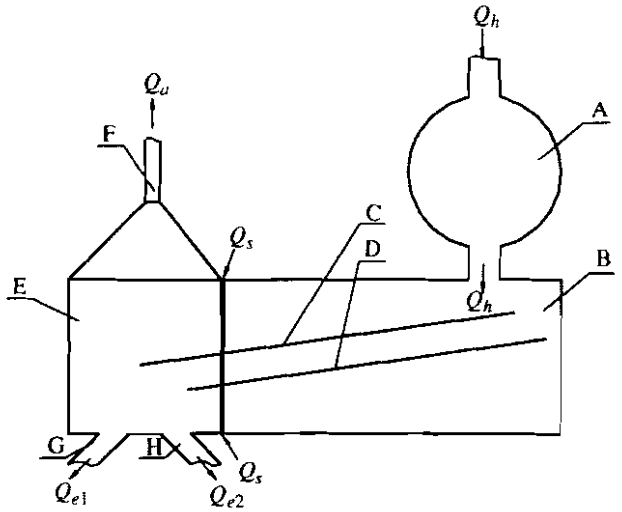

Fig. 1. Local exhaust ventilation system of hulling-separation equipment for cottonseeds: (A) huller; (B) separator; (C) upper sieve; (D) lower sieve; (E) enclosing hood; (F) duct; (G) chute for hull; (H) chute for kernels; Q_a, exhaust capacity of the local exhaust ventilation system; Q_h, air that induced by the huller working elements; Q_s, air that sucked through technological openings and chinks in the housing of the enclosure; Q_{e1} and Q_{e2}, air currents induced by falling bulk materials in chutes which leave the technological equipment

provided an effective means for entrapping the dust particles and so preventing these moving through the duct system. The fillers used in the bed filters were cottonseeds or cottonseed hulls. The effectiveness of the cottonseed bed filters depends on the thickness of the filled layers, bulk density of the filled seeds and air velocity.

The purpose of this study is to obtain a general expression for the prediction of the pressure drop across a granular bed due to the resistance caused by the presence of cottonseed particles in the filter layer, in terms of the voidage and specific surface of the granules. Measurement of pressure drop and air velocity, knowing the cottonseed fuzziness and bulk density, allows for evaluating the external surface area of the cottonseed.

2. Airflow through a granular bed

The airflow through beds composed of seed and grain particles is a frequently used in air pollution control processes (Dairo & Ajibola, 1994; Pagano *et al.*, 2000; Tabak, 1989) and therefore expressions are needed to predict pressure drop across beds due to the resistance caused by the presence of the particles. The drop in pressure for flow through a bed of particles provides a convenient method for obtaining a measure of the external area of particles (Coulson *et al.*, 1991).

2.1. *Darcy's law*

Darcy showed that the average velocity, as measured over the whole area of the bed, was directly proportional to the driving pressure and inversely proportional to the thickness of the bed. This relation is known as Darcy's law (Coulson *et al.*, 1991) and can be written as

$$u = K\frac{(-\Delta P)}{l} \tag{2}$$

where: ΔP is the pressure drop across the bed in Pa; l is the thickness of the bed in m; u is the average velocity of flow of the fluid, defined as $(1/A)(dV/dt)$ in $m\,s^{-1}$; A is the total cross-sectional area of the bed in m^2; V is the volume in m^3 of the fluid flowing in time t in s; and K is a constant depending on the physical properties of the bed and fluid.

The linear relation between the rate of flow and the pressure difference indicates that the flow is streamline. This is expected because the Reynolds number of the flow through the pore spaces in a granular material is low, since both the velocity of the fluid and the width of the channels are normally small. The resistance to flow then arises mainly from viscous drag. Therefore, Eq. (2) can be expressed as:

$$u = K\frac{(-\Delta P)}{l} = B\frac{(-\Delta P)}{\mu l} \tag{3}$$

where: μ is the viscosity of the fluid in $kg\,m^{-1}\,s^{-1}$; and B is termed the permeability coefficient for the bed, and depends only on the properties of the bed (Coulson *et al.*, 1991).

The general structure of a bed of particles can be characterised by the specific surface area of the bed $S_{s,bed}$ and the fractional voidage of the bed, e:

$$S_{s,bed} = \frac{S_{bed}}{V_{bed}} = \frac{1}{l} \tag{4}$$

where: $S_{s,bed}$ is the specific surface area presented to the fluid per unit volume of bed when the particles are packed in a bed, with units in $m^2\,m^{-3}$; S_{bed} is the area of the bed presented to the fluid in m^2; V_{bed} is the volume of the bed in m^3 and l is the thickness of the bed in m. The fraction of the volume of the bed not occupied by solid material, e, is termed the voidage or porosity and is dimensionless. Thus, the fractional volume of the bed occupied by solid material is $(1-e)$.

The specific surface area of the particles, $S_{s,particle}$ in $m^2\,m^{-3}$ is the surface area of the particles divided by its volume:

$$S_{s,particle} = \frac{S_{particle}}{V_{particle}} \tag{5}$$

where: $S_{particle}$ is the surface area of the particles in m^2 when the particles are packed in the bed and $V_{particle}$ is

46

the volume of the particles in m^3. For a sphere of diameter d in m, for example:

$$S_{s,particle} = \frac{\pi d^2}{\pi(d^3/6)} = \frac{6}{d} \quad (6)$$

If point contact occurs between particles so that only a very small fraction of surface area is lost by overlapping (Coulson *et al.*, 1991), *i.e.* $S_{bed} = S_{particle}$, Eqn (5) can be written as

$$S_{s,particle} = \frac{S_{particle}}{V_{particle}} = \frac{S_{bed}}{V_{bed}(1-e)} = \frac{S_{s,bed}}{(1-e)} \quad (7)$$

or

$$S_{s,bed} = S_{s,particle}(1-e) \quad (8)$$

Some values of S and e for different beds of particles have previously been documented (Coulson *et al.*, 1991).

2.2. *General expressions for flow through packed beds in terms of the Carman–Kozeny equation*

The analogy between streamline flow through a tube and streamline flow through the pores in a bed of particles has been used for deriving a general expression (Coulson *et al.*, 1991) for flow through packed beds. The equation for streamline flow through a circular tube is

$$u = \frac{d_t^2}{32\mu}\frac{(-\Delta P)}{l_t} \quad (9)$$

where: u is the average velocity of flow of the fluid in $m\,s^{-1}$; $(-\Delta P)$ is the pressure drop across the bed in Pa; μ is the dynamic viscosity of air in $kg\,m^{-1}\,s^{-1}$; d_t is the diameter of the tube in m; and l_t is the length of the tube in m. If the free space of the bed is assumed to consist of a series of tortuous channels, the equation for flow through a bed may be rewritten as:

$$u_1 = \frac{d_m'^2}{K'\mu}\frac{(-\Delta P)}{l'} \quad (10)$$

where: u_1 is the average velocity through the pore channels in $m\,s^{-1}$; d_m' is some equivalent diameter of the pore channels in m; K' is a dimensionless constant whose value depends on the structure of the bed; and l' is the length of channel in m. It should be noted the u_1 and l' in Eqn (10) now represent conditions in the pores and are not the same as u and l in Eqns (2) and (3), but it is reasonable to assume that l' is directly proportional to l, and that

$$u_1 = \frac{u}{e} \quad (11)$$

For Eqn (10), Kozeny proposed (Coulson *et al.*, 1991) an expression for the equivalent diameter of the pore size d_m' as:

$$d_m' = \frac{e}{S_{s,bed}} = \frac{e}{S_{s,particle}(1-e)} \quad (12)$$

Then, taking $u_1 = u/e$ and $l' \propto l$, Eqn (10) becomes (Coulson *et al.*, 1991):

$$u = \frac{1}{K''}\frac{e^3}{S_{s,bed}^2}\frac{1}{\mu}\frac{(-\Delta P)}{l} = \frac{1}{K''}\frac{e^3}{S_{s,particle}^2(1-e)^2}\frac{1}{\mu}\frac{(-\Delta P)}{l} \quad (13)$$

Kozeny's constant is generally denoted by K'' and is usually taken to be equal to 5. However, K'' is dependent on porosity, particle shape, and other factors. A comparison of Eqn (13) with Eqn (3) shows that the permeability coefficient B is given by

$$B = \frac{1}{K''}\frac{e^3}{S_{s,particle}^2(1-e)^2} \quad (14)$$

Equation (13) applies to streamline flow conditions but Carman and others (Coulson *et al.*, 1991) have extended the analogy with pipe flow to cover both streamline and turbulent flow conditions through packed beds. In this treatment, a modified Reynolds number Re_1 is plotted against a modified friction factor $R_1/\rho u_1^2$.

The modified Reynolds number Re_1 is obtained by taking the same velocity and characteristic linear dimension d_m' as were used in deriving Eqn (13). Thus,

$$Re_1 = \frac{u}{e}\frac{e}{S_{s,particle}(1-e)}\frac{\rho}{\mu} = \frac{u\rho}{S_{s,particle}(1-e)\mu} \quad (15)$$

The friction factor, which is plotted against the modified Reynolds number, is $R_1/\rho u_1^2$, where R_1 is the component of the drag force per unit area of particle surface in the direction of motion in $N\,m^{-2}$ or Pa and can be related to the properties of the bed and pressure gradient as follows. Consider the forces acting on the fluid in a bed of unit cross-sectional area and thickness l. The volume of particles in the bed is $l(1-e)$ and therefore the total surface is $S_{s,particle}l(1-e)$. Thus, the resistance force is given by the expression $R_1 S_{s,particle} l \times (1-e)$. This force on the fluid must be equal to that produced by pressure difference of ΔP across the bed. Then, since the free cross-section of fluid is equal to e

$$(-\Delta P)e = R_1 S_{s,particle} l(1-e)$$

$$R_1 = \frac{e}{S_{s,particle}(1-e)}\frac{(-\Delta P)}{l} \quad (16)$$

Carman found that when $R_1/\rho u_1^2$ was plotted against Re_1 using logarithmic coordinates, his data for the flow through a randomly packed bed of solid particles could be correlated approximately by a single curve, whose

47

general equation was

$$\frac{R_l}{\rho u_l^2} = 5Re_l^{-1} + 0{\cdot}4Re_l^{-0{\cdot}1} \tag{17}$$

From this equation, it can be seen that for values of Re_l less than about 2 (Coulson *et al.*, 1991), and the second term is negligible and can be omitted. Therefore, Eqn (17) becomes

$$\frac{R_l}{\rho u_l^2} = 5Re_l^{-1} \tag{18}$$

Ergun (1952), writing $d = 6/S_{s,particle}$ has obtained a good semi-empirical equation for pressure drop as follows:

$$\frac{R_l}{\rho u_l^2} = 4{\cdot}17Re_l^{-1} + 0{\cdot}29 \tag{19}$$

In Eqn (19) (Coulson *et al.*, 1991), the first term represents viscous drag losses which are more significant at low velocities and the second term represents kinetic energy losses which become more significant at high velocities.

3. Experimental materials and methods

3.1. *Cottonseed samples*

The experiments that form the basis of this paper were carried out in October–March, 2002–2003 at the Technion (Israel). In this study, an average value of the density of air ρ was taken as $1{\cdot}21\,\mathrm{kg\,m^{-3}}$. The deviation of the measured values from the above air density ranged between −3 and +4%.

The research was carried out with fuzzy and bare cottonseeds as the media of the granular bed filters. Fuzzy and bare cottonseed samples in quantities (approximately 400 kg) sufficient for an experiment were prepared in the following way. Four portions, each of 400 kg mass, were randomly taken from different bulk quantities of cottonseed of the same fuzziness. These four portions were mixed together to assure that each sample has the same lint content. The mass of each test sample of the seeds was weighed with an electronic balance, and was evenly supplied into the filter basket.

To ensure the cottonseed and by-product samples had approximately the same moisture content, the samples were placed in thin layers and kept in an air-conditioned room for 24 h before the study. The moisture content of the samples was kept at the 10–12% d.b. this is most frequently encountered as an optimum moisture content in the cottonseed oil production industry. The quantities of seeds in each sample were then carefully mixed with water, allowed to equilibrate for a further 24 h and then dried in an air-drying cabinet, if it was needed, to achieve the requisite seed moisture content. The moisture content of cottonseed samples was determined by using standard methods (ASAE, 1992), at an oven temperature of 103°C, and a heating time of about 4 h.

3.2. *Experimental arrangement*

To study the pressure drop across beds due to resistance caused by the presence of cottonseed particles in the layer an experimental installation was designed and built. The experimental arrangement is shown in *Fig. 2* and is similar to the installation used by other

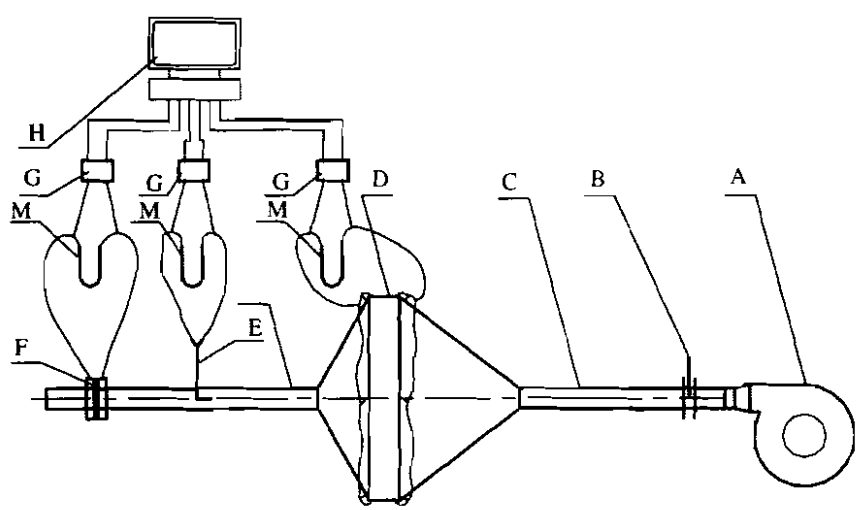

Fig. 2. Experimental installation for study of the pressure drop across granular bed filters filled with cottonseed particles: (A) fan; (B) damper; (C) ducts; (D) filter; (E) Pitot tube; (F) orifice flow meter; (G) pressure transducers; (H) computer; (M) U tube manometers

48

investigators (Carman, 1997; Dairo & Ajibola, 1994; Devies, 1973; Fuchs, 1973; Otany *et al.*, 1989; Pagano *et al.*, 2000; Tabak, 1989; Tardos, 1997; Tien, 1989).

The experimental rig included the following elements: the granular bed filter (D) filled with cottonseed, a diffuser before the filter and a contractor after it, a fan (A), ducts (C), and a damper (B). The filter had a parallelepiped spaced frame constructed with an angle bar. The cross-section of the two opposite sides of the frame exposed to the direction of airflow was 1 m by 1 m and the width was variable, and could be changed from 50 to 150 mm. A right angle basket including cottonseed filler was placed into the frame. There were three types of baskets, each of a different width of 50, 100, and 150 mm, respectively. Baskets were built of angle bars and the parallel sides exposed to airflow were covered by grids of wire. A bulk density of cottonseeds of 760 kg m^{-3} was maintained in the filter by carefully weighing the filled cottonseed and by evenly distributing the seeds in the filter.

A calibrated Pitot tube (E) and an orifice flowmeter (F) were used for the measurement of airflow rate. The orifice flowmeter was 78 mm in diameter and was installed between flanges connecting two pipe sections. Flange pressure taps were located at a standard distance of 25·4 mm from either side of the orifice. The exact geometry and specification of the orifice followed the ISO 5167-1 (ISO, 1991), ISO5167-1, Amendment 1 (ISO, 1998) and ASME (1971) standards. The orifice flowmeter was calibrated by timing a volumetrically measured amount of air. The correction factor K_1 was determined and compared with correction factor values given in ASME Standard PTC 19.5 (ASME, 1972). The contraction coefficient, friction loss coefficient, and approach factor $1/(1-\beta^4)^{0.5}$, where β is the ratio of the orifice diameter D_2 in m, to the pipe diameter D_1 in m, can be combined for the orifice flowmeter into a single constant K_1, which is a function of geometry and Reynolds number. The orifice flow-rate equation recommended by ASHRAE (2001) is

$$Q = K_1 A_2 \sqrt{\frac{2(p_1 - p_2)}{\rho}} \tag{20}$$

where: Q is the discharge flow rate in m^3 s^{-1}; A_2 is the orifice area in m^2; and $(p_1 - p_2)$ is the pressure drop in Pa.

Pressure drop values were measured at three points: before and after the filter; at the Pitot tube; and at the orifice flowmeter. Each of the three measurement points was connected to a separate (G) pressure transducer (SHAEVITZ Pressure Sensors, P-3061 Transducer) and a computer data acquisition system (LABTECH, Laboratory Technologies Corporation, Version 6.1.2). Each of the measurement points was also connected to a U-tube manometer (M). The pressure drop values measured across the filter were determined as the difference between the overall pressure drop due to the airflow through the filled filters and pressure drop through the empty basket grids only. Each measurement was repeated 100–110 times over a 10 s interval and the average pressure drop due to the airflow was determined. Data collected from the U-tube manometers served to check the transducer readings for pressure drop. To obtain correct values of the air density, dry bulb and wet bulb temperatures were also measured during the experiments.

4. Experimental results

The values of the pressure drop due to the airflow through beds of fuzzy and bare cottonseed particles of different layer thickness, *i.e.* 50, 100, and 150 mm are presented in *Fig. 3*.

The airflow rate per unit area of filter surface perpendicular to the air stream flow was varied from 0·025 to 0·22 (m^3 s^{-1}) m^{-2}. As the flow rate of air increased, the pressure drop across the filter increased for all of the particles tested. As the airflow rate increased from about 0·025 to 0·22 (m^3 s^{-1}) m^{-2}, the pressure drop increased from about 14 to 85 Pa for the fuzzy and to 74 Pa for bare cottonseeds in the bed of 50 mm thickness. However, as seen from *Fig 3*, the pressure drop for both the 100 and 150 mm thickness of

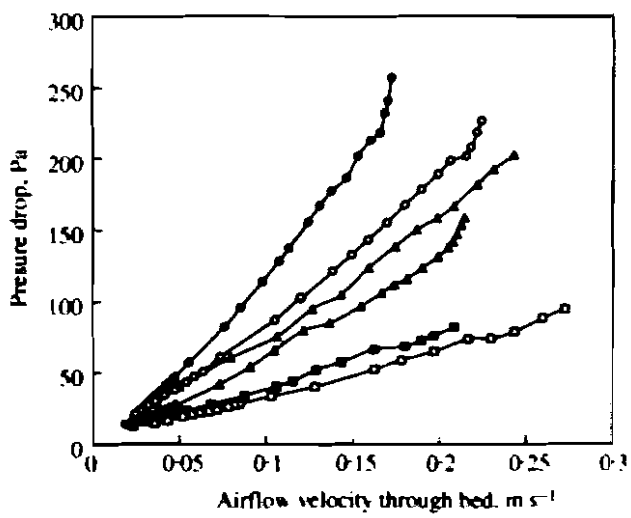

Fig 3. Pressure drop as a function of the airflow velocity through a bed of fuzzy and bare cottonseed particles of different layer thickness: □, 50 mm layer of bare seed; ■, 50 mm layer of fuzzy seed; △, 100 mm layer of bare seed; ▲, 100 mm layer of fuzzy seed; ○, 150 mm layer of bare seed; ●, 150 mm layer of fuzzy seed

49

fuzzy cottonseed beds considerably exceeds the pressure drop for the fuzzy cottonseeds in the bed of 50 mm thickness, with pressure drop from 15 to 182 Pa and from 20 to 257 Pa, respectively.

The measured pressure drop in the bed of 100 and 150 mm thickness of fuzzy cottonseed, considerably exceeds the pressure drop measured in the bare cottonseed beds of the same thickness. The pressure drop increased from approximately 15 to 182 Pa in the 100 mm fuzzy cottonseed bed, and from 13 to 159 Pa in the 100 mm bare cottonseed bed, as the airflow rate increased from about 0·025 to 0·22 $(m^3 s^{-1}) m^{-2}$. As the flow rate of air increased the pressure drop increased from about 20 to 257 Pa in 150 mm fuzzy cottonseed bed, and from 20 to 219 Pa in 150 mm bare cottonseed bed.

Increasing of the thickness of the both fuzzy and bare cottonseed bed from 50 to 100 to 150 mm leads to a relatively even increase in the pressure drop due to the airflow through the bed.

5. Calculations and discussion

The expressions, needed to predict the pressure drop across the beds, caused by the resistance from the presence of the particles, was based on Eqn (17) proposed by Carman (Coulson *et al.*, 1991) and Eqn (19) proposed by Ergun (1952).

Carman (Coulson *et al.*, 1991) found from Eqn (17) that, when $R_1/\rho u_1^2$ was plotted against Re_1 using logarithmic coordinates, the data for the flow through randomly packed bed of solid particles could be correlated approximately by a single curve, of general equation:

$$\frac{R_1}{\rho u_1^2} = a\, Re_1^b + c\, Re_1^d \tag{21}$$

where: a, b, c, d are constants.

Ergun (1952) obtained with Eqn (19) a good semi-empirical correlation for pressure drop as follows:

$$\frac{R_1}{\rho u_1^2} = a\, Re_1^b + c \tag{22}$$

The calculations to obtain the best-fit coefficients and the corresponding plots were carried out using Microsoft Excel; numerical values for the coefficients, where $c = 0$, are given in Table 1.

The table shows the coefficient a had values 22·72, 45·13, and 50·06 for bare seed fillers, and 44·07, 55·0, and 58·0 for fuzzy seeds, where thickness of the fillers changed from 50 to 100 and 150 mm correspondingly. The values of coefficient a for fuzzy seeds exceed values of coefficient a of bare seeds for beds with the same thickness. The possible reasons for this behaviour was the presence of short fibres adhered to the cottonseed hull. Moreover, the difference between the coefficients obtained in our research and the coefficients given by Eqns (18) and (19) is probably due to the unusual morphology and surface character of the filler particles, including the fuzziness of the cottonseeds in comparison to the smoother and much more spherical shape of the particles used by other investigators. The peculiarity of the shape and surface characteristics of the cottonseed particles also leads to differences in the values of their drag coefficient (Tabak & Wolf, 1998).

Calculated values of exponent b were found to vary from −1·11 to −0·91 for studied different cottonseed beds. The values of exponent b were very close to the value of −1 obtained by Carman, Kozeny (Coulson *et al.*, 1991) and Ergun (1952) using the analogy between streamline flow through a tube and streamline flow through the pores in a bed of particles.

Graphs plotted in accordance with Eqn (22) using the coefficients given in Table 1 compared favourably with most of the measured data for both fuzzy and bare (*Figs 4–9*) cottonseed filter beds. The values for the coefficient of determination R^2 varied from 0·9672 to 0·9979.

6. Conclusions

In this paper, the cottonseed bed fillers of different fuzziness were used. Therefore, the pressure drop due to airflow across beds filled with cottonseeds depends on the airflow rate, the thickness of the bed and the fuzziness of cottonseeds. The pressure drop was found

Table 1
Coefficients a and b for Eqn (21) based on the experimental data; R^2, coefficient of determination

Coefficients	*Thickness of bare cottonseed filler, mm*			*Thickness of fuzzy cottonseed filler, mm*		
	50	100	150	50	100	150
a	22·72	45·13	50·06	44·07	55·0	58·0
b	−1·07	−0·99	−1·0	−1·11	−0·91	−1·0
R^2	0·9959	0·9917	0·9971	0·9979	0·9702	0·9672

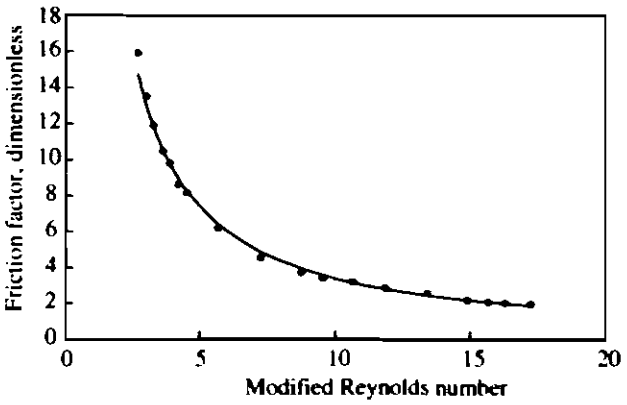

Fig. 4. Comparison between measured (●) and calculated (—) values of the friction factor for a fuzzy cottonseed layer of 50 mm thickness

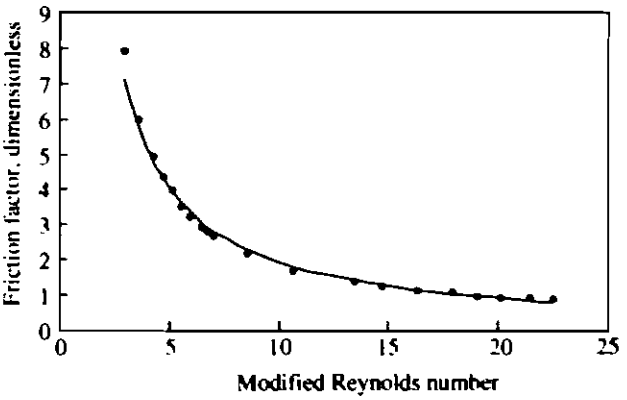

Fig. 5. Comparison between measured (●) and calculated (—) values of the friction factor for a bare cottonseed layer of 50 mm thickness

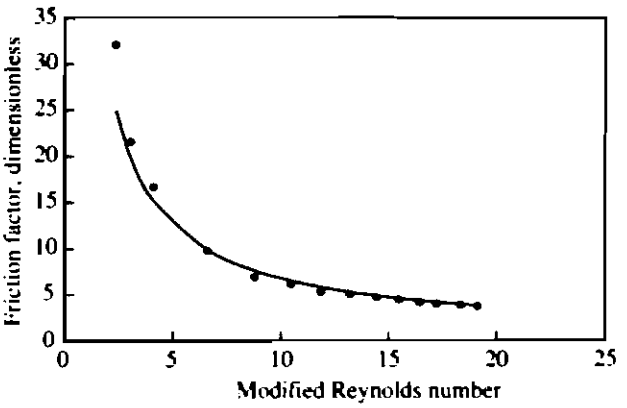

Fig. 6. Comparison between measured (●) and calculated (—) values of the friction factor for a fuzzy cottonseed layer of 100 mm thickness

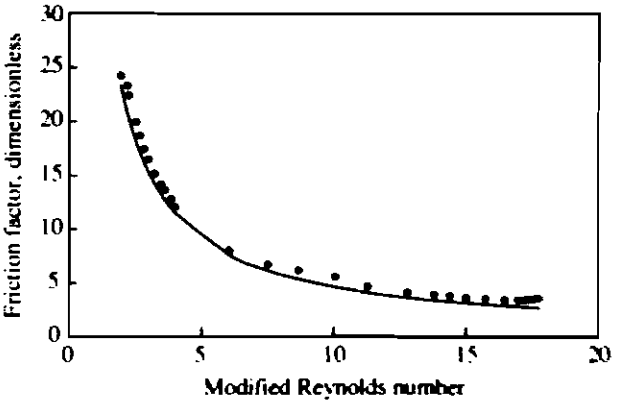

Fig. 7. Comparison between measured (●) and calculated (—) values of the friction factor for a bare cottonseed layer of 100 mm thickness

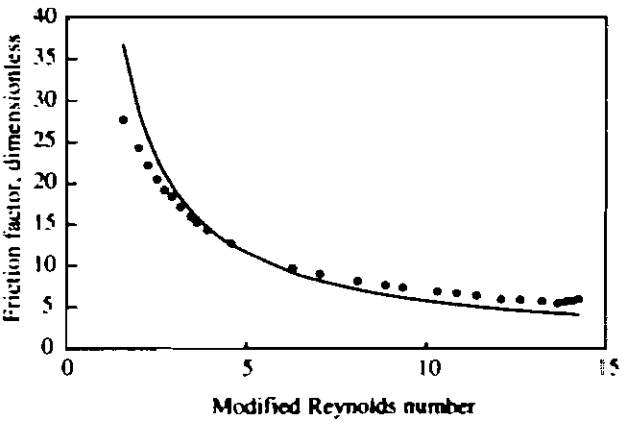

Fig. 8. Comparison between measured (●) and calculated (—) values of the friction factor for a fuzzy cottonseed layer of 150 mm thickness

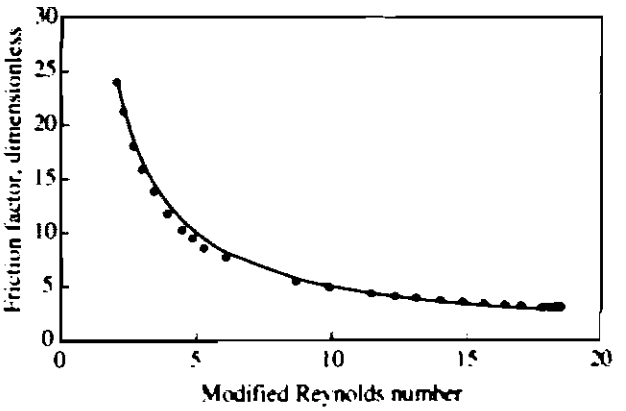

Fig. 9. Comparison between measured (●) and calculated (—) values of the friction factor for a bare cottonseed layer of 150 mm thickness

51

to increase as the flow rate of air increased for beds of all particles studied. The pressure drop increased from about 14 to 85 Pa for fuzzy and from 14 to 74 Pa for bare cottonseed beds both of 50 mm thickness and as the airflow rate was increased from about 0·025 to $0{\cdot}22\,(m^3 s^{-1})\,m^{-2}$.

For the same range of airflow rate, the pressure drop was found to increase approximately from 15 to 182 Pa for fuzzy cottonseed beds of 100 mm and from 20 to 257 Pa of 150 mm thickness and from 13 to 159 Pa for a bare cottonseed bed of 100 mm thickness, and from 20 to 219 Pa for a bare cottonseed bed of 150 mm thickness. Thus, the pressure drop in 100 and 150 mm fuzzy cottonseed beds considerably exceeds the pressure drop in bare cottonseed beds of the same thickness. An increase in thickness of the bare and fuzzy cottonseed bed from 50 to 150 mm results in a monotonic increase in pressure drop at the same airflow through the bed.

Acknowledgements

The authors wish to thank Prof. Robert Pfeffer of the New Jersey Institute of Technology, Newark, NJ for many insightful technical discussions during the progress of this research. Semion Tabak was supported financially by the Center for Absorption in Science, Ministry of Immigrant Absorption, State of Israel. This research was supported in part under Grant No. TA-MOU- 98-CA17-010 U.S.-Israel Cooperative Development Research Program, Economic Growth, U.S. Agency for International Development.

References

ACGIH (1988). Advances in Air Sampling. American Conference of Governmental Industrial Hygienists, Cincinnati, OH

ASAE (1992). Moisture measurement-unground grain and seeds. ASAE Standards S352.2: 1992. St Joseph, MI

ASHRAE (1999). Handbook of Applications. American Society of Heating, Refrigerating and Air-Conditioning Engineers, Inc., Atlanta, GA

ASHRAE (2001). Handbook of Fundamentals. American Society of Heating, Refrigerating and Air-Conditioning Engineers, Inc., Atlanta, GA

ASME (1971). Orifice, Nozzle and Venturi Flow Rate Meters. In. Fluid Meters: Their Theory and Application (Bean H S, ed.), (6th Edn). Report of ASME Research Committee on Fluid Meters. American Society of Mechanical Engineers, New York

ASME (1972). Application of Fluid Meters, Part II, (6th Edn). (Interim Supplement 19.5 on Instruments and Apparatus). Standard PTC 19.5-72. ASME, American Society of Mechanical Engineers, New York

Bailey A E; Hilditch T P; Longenecker H E; Markley K S (1948). Cottonseed and Cottonseed Products. Interscience Publishers, Inc., New York

Carman P C (1997). Fluid flow through granular beds. Chemical Engineering Research and Design. Transactions of the Institute of Chemical Engineering, **75** (Suppl), S32–S48

Clark S P (1977). Hulling-separating cottonseed without delintering. Journal of the American Oil Chemists Society, **54**(7), 286–288

Clark S P; Johnson L A (1981). Effects of residual cottonseed linters on hulling-separating and preparation for extraction. Oil Mill Gazetteer, **86**(5), 34–37

Coulson J M; Richardson J F; Backhurst J R; Harker J H (1991). Chemical Engineering. Pergamon Press, Oxford, New York, Seoul, Tokyo

Dairo O U; Ajibola O O (1994). Resistance of airflow of bulk sesame seed. Journal of Agriculture Engineering Research, **58**, 99–105

Davies C N (1973). Aerosol Filtration. Academic Press, London

Ergun S (1952). Fluid flow through packed columns. Chemical Engineering Progress, **48**, 89–94

Fuchs N A (1973) Mechanics of Aerosols. Pergamon Press, Oxford

ISO (1991). Measurement of Fluid Flow by Means of Pressure Differential Devices, Part 1: Orifice Plates, Nozzles, and Venturi Tubes Inserted in Circular Cross-section Conduits Running Full. ISO Standards 5167-1:1991(E). International Organization for Standardization, Geneva

ISO (1998). Measurement of Fluid Flow by Means of Pressure Differential Devices, Part 1: Orifice Plates, Nozzles, and Venturi Tubes inserted in Circular Cross-section Conduits Running Full. ISO Standards 5167-1:1991 Amd.1: 1998(E). International Organization for Standardization, Geneva.

Lear D H (1985). Controlling dust in cottonseed and soybean mills. Oil Mill Gazetteer, **89**(12), 36–40, 42

Matlock S W; Wiederhold L R; Parnel C B (1976). Particle sizing of dust found in cottonseed oil mill. Transactions of the ASAE, **19**(5), 970–976

Otany Y; Kanaoka C; Emi H (1989). Experimental study of aerosol filtration by the granular bed over a wide range of Reynolds numbers. Aerosol Science and Technology, **10**(3), 463–474

Pagano A M; Crozza D E; Nolasco S M (2000). Airflow resistance of oat seeds: effect of airflow direction, moisture content and foreign material. Drying Technology, **18**(1&2), 457–468

Parnel C B; Gracy J A; Clark C P; Norman B M (1982). Engineering controls to lower dust level in cottonseed oil mills. Transactions of the ASAE, **25**(1), 170–174

Smith K J (1975). Status of cottonseed oil mills compliance with environmental and safety regulations. Oil Mill Gazetteer, **79**(11), 36–38

Steele L D (1982). Controlling dust in an oil mill. Oil Mill Gazetteer, **87**(6), 10–12

Tabak S (1989). Fundamentals of low-waste technology for preparatory operations in cottonseed oil production. Thesis (Dr. Sc.), All-Union Scientific Institute of Oil Production, Leningrad, USSR

Tabak S; Wolf D (1998). Aerodynamic properties of cottonseed. Journal of Agriculture Engineering Research, **70**(3), 257–265

52

Tabak S I; Biran A B; Tabak I; Manor G (2002a). Airflow induced by falling cottonseed particles. Biosystems Engineering, **81**(4), 395–405, doi:10.1006/bioe.2001.0037

Tabak S I; Broday D M; Tabak I; Manor G (2002b). Occupational exposure to cotton dust in cottonseed oil mills. Applied Occupational and Environmental Hygiene, **17**(2), 121–130

Tardos G I (1997). Separation of airborne dust in deep-bed filtration. In: Advances in Aerosol Filtration (Spurny K R, ed.). Lewis Publishers, Boca Raton, Boston, London, New York, Washington DC

Tien C (1989). Granular Filtration of Aerosols and Gidrosols Butterworth, Boston

53