PN-ACY-721

CLIN 7: Reduced Rate of Growth of GHG Emissions from Vehicles

Subtask 7.C *Demo Project Documentation Submitted for Financing*

Greenhouse Gas Pollution Prevention Project - Climate Change Supplement

A Program of the:
United States Agency for International Development / India Mission

Implemented by:
The Louis Berger Group, Inc.
Global Environment Team

TABLE OF CONTENTS

SECTION I: INTRODUCTION AND PROJECT BACKGROUND

Executive Summary

I. Background

a. Selection of Hyderabad as Site for Demonstration Project
b. Vehicle Technology Assessment/Emissions Reduction Technologies

II. The Third Report: Hyderabad Demonstration Project

a. Traffic Management Interventions
b. Vehicle Technology Management
c. Improved Pollution Under Control Systems
d. Emissions Loads in the Demonstration Project Corridor

III. Transport Sector and Health

SECTION II: DEMONSTRATION PROJECT PROPOSAL FOR FINANCING

Executive Summary

I. Introduction

II. Research Project Objectives

III. Anticipated Outcomes

IV. Implementing Organization

V. Project Implementation

a. Emission Data Collection Process
b. Research Project Pilot Area Selection
c. A Systematic Measuring Tool: Data Collection System
d. Location and Infrastructure Facilities

VI. GHG Emission Reduction Aspects

VII. Research Project Financial Structure

a. PUC Centers Equipment Costs
b. Networking System Costs
c. SIAM Management Cost

THE Louis Berger Group, INC.
2300 N Street, NW
Washington, DC 20037 USA

The Louis Berger Group, Inc.
Contract No. 386-C-00-00-00058-00
Sandeep Tandon, CTO

1a

VIII. **Financial Sustainability**

a. ***PUC Center Operators***
b. ***RTA***
c. ***SIAM***
d. ***Financial Analysis***

Annexes

a. ***PUC Certification Process***
b. ***Research Study Implementation Team Structure***
c. ***Task Force***
d. ***Equipment Requirements for PUC Centers***

List of Figures

Figure 1: ***Schematic Diagram of the Various Blocks for Computerized Networking System***

Figure 2: ***Probability of Failure of Vehicles***

SECTION I: INTRODUCTION AND BACKGROUND FOR THE PROJECT

I. Background

The Greenhouse Gas Pollution Prevention Project – Climate Change Supplement (GEP-CCS) was initiated in May 2000. Funded by USAID, the project is being implemented in India by the Louis Berger Group Inc. for USAID/India. The main purpose of the project is to provide technical assistance to build capacity and facilitate demonstration projects that result in reduced greenhouse gas (GHG). The project has six different components. The component addressed in this report is the development of a demonstration project for reduced local and GHG emissions from vehicles in a selected city. Other components of the GEP-CCS project focus on reduction of GHG emissions in industries, the utility sector and municipalities (methane emissions from municipal solid waste).

This fourth report covers the sub-task CLIN 7C deliverable "Demo Project Documentation Submitted for Financing" under the reduction of GHG emissions from the transport sector to be completed per the transportation component of GEP-CCS.

a. Selection of Hyderabad as Site for Demonstration Project

The first report in the series entitled *Selection of a City* (May 2001) was prepared by a GEP-CCS partner, the Society of Indian Automobile Manufacturers (SIAM). The purpose of the report was to identify an optimal city with which GEP-CCS could collaborate for designing and obtaining finance to implement the demonstration project. Hyderabad was selected from a list of six potential candidate cities (Bangalore, Chennai, Hyderabad, Kolkata, Mumbai and Pune). Nine criteria were used and weighted to give importance to key factors. For example, the most important criterion (weighted 5) was the ability and willingness of the local government to support such a demonstration project; the second ranked criteria (2 criteria weighted 3 each) were air quality and the availability of alternative fuels. Total scores were adjusted to enable reporting on a scale of 100. Hyderabad was ranked first, with almost 85 points. Mumbai was second, with almost 82 points.

b. Vehicle Technology Assessment/Emissions Reduction Technologies

The second report in the series entitled *Report on Vehicle Emission Technology Assessment* (VTA) was completed in June 2001[1]. The VTA provided a basis for evaluating vehicle technology, fuel and vehicle management options that could potentially be employed in the demonstration project. The report assessed the type of vehicles in Hyderabad (two & three-wheelers, cars, taxis, buses, etc.) and the emissions per km/person from each. Also, it assessed environmentally sound vehicle technology options, emission levels resulting from using better technology and alternative fuel options (and the relative costs to users), and looked at vehicle management options that would reduce vehicle emissions.

[1] The two reports: a) *Selection of a City*, and b) *Report on Vehicle Emission Technology*, are available from USAID on request.

II. The Third Report: Hyderabad Demonstration Project

The Hyderabad demonstration project is designed to integrate vehicle technologies and traffic management interventions in order to serve as a model for reducing GHG emissions from vehicles and to promote new transportation interventions. The demonstration project will incorporate new applications of existing technologies and transportation management interventions that could be replicated across India.

Over time, USAID suggested that the scope of the demonstration project assignment be refined and limited. USAID re-iterated that the purpose of the TA was to identify a set of options, that is, traffic interventions and technology or vehicle management options, that are or would be available in the short-term, relatively low-cost and that could be managed or implemented by local authorities. *The over-riding project design considerations were the ability of the project to implemented and replicated.* In order to meet these dual goals and to assist project formulation, criteria were developed and applied to ensure that the main factors were considered in the final project design (see Table E-1).

Table E-1: Criteria Considered in Project Design

Criteria	Comments on Implications for Design
Implementation probable within one-two years	Desire for tangible, visible changes in local and GHG emissions reduction in the short-term.
Interventions within the direct control of local implementing authority or private sector agents	Interventions dependent on state or GOI policy or regulatory decisions, such as fuel policy or vehicle retirement, were not included as there is no assurance that policy or regulatory decisions would be approved and permit demonstration within the 1-2 year timeframe.
Relatively low initial capital costs	A key factor for facilitating replication in other municipalities. Major capital-intensive interventions such as mass transit systems, large transportation infrastructure projects, etc., even when supported by donors, are given lower priority as they are not easily replicable - due to short-term resource and capacity constraints of most Indian municipalities. Where possible, interventions with revenue generation potential were prioritized as being more likely to be sustainable and replicable.
Technology and/or fuel availability	The one-two year timeframe dictated that technologies, fuels and other interventions should be available for practical application within this period.
GHG emissions reduction potential	GHG reduction potential was not the priority filter for selecting interventions, as local pollutant reductions are the primary drivers for local decision makers. However, only interventions that have at least an incremental GHG emission reduction potential were considered.
Finance potential	Priority interventions were those with a high degree of finance or funding potential (particularly true of Hyderabad).
Consistency with local transport and development plans	Local authorities were deemed more supportive of interventions that reinforced/supported their current transport or development objectives.

Many different technologies and alternative fuel types were initially identified and considered. Implementation and replication potential was largely viewed as being achievable to the extent that local authorities have sole or primary discretionary authority to implement interventions (and/or in partnership with the private sector). It was decided to drop alternative fuels from further consideration as the policies and regulations affecting their availability and use lie at the central and state government levels rather than the local government level. This is also true for vehicle management options such as vehicle retirement or bans of certain types of vehicles. Also, a number of technologies such as fuel cells were dropped from further consideration on the grounds of cost, availability and suitability factors.

As the lead agency in Hyderabad responsible for traffic management and planning, the Hyderabad Municipal Commission (MCH) partnered with LBG to design the demonstration project. Mindful of past and projected rapid increase in transport vehicle population numbers, the MCH seeks a series of traffic and transport interventions based on sound international practice. The MCH has been very proactive in facilitating transportation sector improvements in the city and has worked closely with the LBG Team to design traffic and transport management interventions that are practical and implementable given local conditions.

The demonstration project has, through a series of iterations, been refined to a series of traffic management interventions and three readily available and relatively low-cost vehicle technology/management interventions:

a. Traffic Management Interventions

The traffic management interventions are designed essentially to reduce traffic congestion and to improve traffic flow. The benefits to urban air quality are derived from the lower combustion of fuel per km travelled and the cleaner combustion of fuel. From the first effect, the total pollution load is reduced; from the second, the types of pollution are changed. The net effects are direct reductions in CO_2, CO, HC, PM and NOX emissions and indirect reductions of NOX pollution generated by the ultra-violet effect on unburned HC in the atmosphere.

Seven interventions are proposed for demonstration:

- Treatment of road cross-sections - segregation of non-compatible vehicle streams to reduce vehicle conflicts;
- Roadway standardization to ensure consistency in lane number and width;
- Improvements of intersections to improve flow and reduce turning movements;
- Improved pedestrian and driver control (separation of vehicle movements from vulnerable road users);
- Enhanced signing and information devices;
- Improved signalization synchronization to reduce traffic delays and idling at intersections; and
- Improved control of parking to reduce traffic flow conflicts.

b. Vehicle Technology/Management

The following three interventions were proposed:

i) **Improved Emissions Checking Systems** Offer significant reductions in vehicle emissions when a good emission check and maintenance system is enforced. This type of innovation is very cost-effective as the preliminary infrastructure is already available. Selected Pollution Under Control (PUC) centers in and in the immediately vicinity of the pilot corridor would be upgraded with new equipment such as 4-gas analyzers, computerized and linked to a central database and fitted with video technology to test and keep track of vehicles examined (to help the local government to track polluting vehicles). Preliminary estimates that such a system and maintenance enforcement would reduce CO_2 emissions by approximately 2,363 tons per year.

ii) **Electric vehicles** (EV) offer the benefit of zero tail pipe emissions. SIAM and several Indian automobile manufacturers are collaborating on developing and mainstreaming EVs, with particular emphasis on three-wheelers, however this invention was not implementable in the short term and it was decided not to include this as part of the pilot demo.

iii) **Retrofit of Ambassador cars** in the MCH fleet with new, lower emission-producing engines. While this intervention seemed to offer a cost-effective solution to aging fleets given the constraints on government purchases of new vehicles, the retro-fits are still very costly per vehicle and retro-fits are not as effective on all models at reducing emissions. The Hyderabad municipality opted not to pursue this intervention.

The main body of this report, (4th report in the vehicle emissions series) thus, is comprised of the project document prepared for the financing for the aspect of the demo pilot which promotes improved checking of vehicular emissions. In November, the Hyderabad Transport Department declared that the PUC centres will be computerized. The funding for the PUC component of the pilot therefore, focuses on the operational aspects of the intervention. Enabling improved testing of vehicular emissions, establishing standardized operational and testing procedures, software design and networking the equipment, upgrading to four-gas analyzers, and training the centre operators, are all key to the effectiveness of the PUC computerization. In addition, the proposed intervention includes the all-important data gathering aspect that will be critical in tracking the results of the interventions, establishing a real-time database on emissions from in-use vehicles, and in aiding policy and planning discussions related to urban health and transport.

The Municipality has already almost completed the physical interventions for the pilot corridor according to the demo project design in preparation for a formal launch of the corridor in 2003. Under the GEP-CCS urban transport initiatives, a set of guidelines for integrating traffic management interventions into urban development plans has been prepared. Designed to assist other Indian cities to adopt transportation interventions to reduce urban air pollution and GHG emissions, these Guidelines for Master Planners are now ready to disseminate in combination with various outreach activities.

C. Improved Pollution Under Control Systems

The performance of any vehicle deteriorates gradually over time but regular inspection and maintenance can improve performance and keep emissions under control.

India already operates an inspection and maintenance program called "Pollution under Control" (or PUC). The process involves vehicle emission testing and certification when standards are met. The process is a low investment and high return intervention. A number of authorities in Andhra Pradesh and Hyderabad, as well as GOI officials have developed policy statements supporting the expanded use of the PUC system as a major tool for reducing vehicular emissions. As is well known, the existing PUC checking system has not, for the most part, operated effectively or thoroughly. This proposed intervention calls for piloting upgraded PUC centers where critical shortcomings of the existing PUC system are overcome. However, the political and policy will must exist to enact stringent enforcement actions to support the effectiveness of any PUC system. With an improved emissions checking system, a greater number of vehicles will be maintained to reduce emissions and improve fuel efficiency.

SIAM has recently conducted inspection and maintenance camps in several Indian cities including Delhi, Mumbai, Bangalore and Hyderabad. Data collected during the camps showed that by improved maintenance, substantial reductions in CO, HC and CO2 emissions could be achieved. For example, in Delhi, CO2 would be reduced by a total of approximately 56,000 tons/year.

i) PUC Certification and Process

Under the PUC certification program, vehicles are checked with the engine idling (for gasoline engines), and with the engine revving in neutral (for diesel engines). When emissions are within the prescribed limit, a PUC certificate is issued for the vehicle, otherwise it would go for repair in order to enable the vehicle to meet the stipulated emission level.

The present process for the PUC check is as follows:

- The vehicle reports for PUC certification at an authorized emission test center;
- The engine is started/ warmed up (if not already so) and a test probe inserted in the tail pipe;
- When the engine is running smoothly, the results are observed on the analyzer;

- When results are not within the stipulated range, minor adjustments are made to the carburetor by the tester; if there are no major problems, the emission values are brought within acceptable limits;
- A PUC certificate and windscreen sticker are generated and handed to the owner.

The PUC system is simple and effective but its potential is not realized because of:
- Malpractice due to human intervention;
- Inadequate procedures due to lack of proper training;
- No audit by independent authority;
- No tracking system or follow up of vehicles failing to meet norms.

The inventions proposed in the Section II document were designed to address the above recognized failings of the current PUC system.

ii) Potential Local Air Quality Benefit and Reduced GHG Emissions

With assistance from the Oak Ridge National Laboratory of the USA, SIAM conducted an I&M program in November/December 1999 with participation by all 2-wheeler manufacturers along with the Indian Oil Company, ATMA, PCRA and TERI in Delhi. The objective of the program was to form a public-private partnership, generate test data and implement an I&M program. Camps were held at 12 locations and 66,000 2-wheelers checked.

All the vehicles were tested for tail pipe emissions and some were also subjected to fuel efficiency, opacity and mass-emission tests. Most vehicles were 1 to 15 years old. Approximately 7% of tested vehicles did not meet the requisite standards but did meet them after maintenance. Under idle, I&M lowered HC emissions by some 40% and CO emissions by about 3% and raised fuel efficiency by 10-20%. On fuel savings alone, if such testing and maintenance were carried out on the entire Delhi fleet, fuel consumption would be reduced by 24 million liters per year and CO2 emissions would be reduced by 56,000 tons/year.

An analysis was also conducted by the Automotive Research Association of India on a total of 34 vehicles including 2-wheelers, 3-wheelers and passenger cars of various ages, whereby simple, inexpensive maintenance such as cleaning, tuning, and adjusting the carburetor and ignition systems achieved a 60% reduction in HC and CO emissions, and a 20% improvement in fuel consumption.

iii) Proposed Demonstration Project

It is proposed to establish seven computerized PUC emission test centers within and near the demonstration area to overcome deficiencies of the present system and enable:
- Networking of the computerized system to enable tracking of vehicles and identify defaulters (presently only 30% of vehicles undergo a periodic emission check);
- Facilitate regular communication with vehicle owners;
- Facilitate compilation, sorting and retrieval of collected data for analysis and policy formulation.

Improved emissions checking through upgrading existing PUC centers is low-cost, easily implementable and replicable, and would form part of an I&M program to ensure that tail-pipe

emissions remain within the specified limits during vehicle operations. Figure 5-1 on the following page shows the basic components of an upgraded PUC center.

iv) Operational Requirements of Upgraded Computerized Test Centers

Equipment:

a. **Gas analyzer:**[4]
   - Upgrade existing equipment to convert from analog to digital signal
   - Set up new four-gas analyzer for petrol vehicles (with a lambda sensor to check new passenger cars with closed loop 3-way catalyst)
   - Opacity meter with temp probe and RPM m
b. **Computer** with suitable software and **printer**
c. **Camera** (a digital web camera to photograph r

Computerized PUC Emissions Test Center Schematic

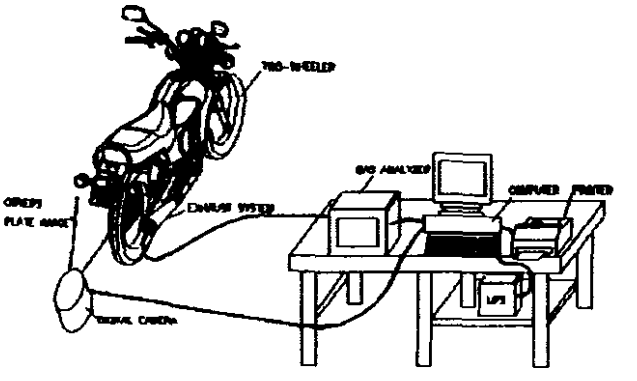

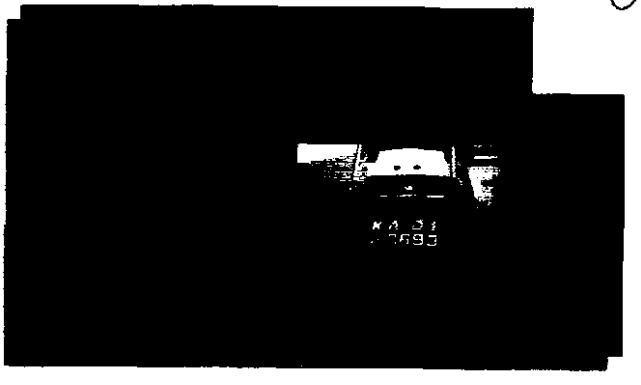

Computerized Test C

View of Emission Test Center in Delhi

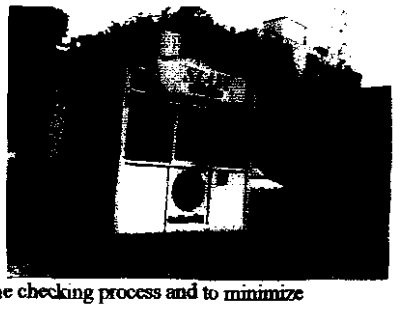

[4] The checking procedure may need modification to enable computerization of the checking process and to minimize erroneous results.

v) PUC Emission Reduction Potential in Hyderabad

Data from an extensive study done by the SIAM on vehicles in Hyderabad and other cities showed that through simple I&M procedures, local pollutants and GHG emissions could be reduced by significant amounts. There were approximately 1.1 million vehicles registered in Hyderabad in 2001. The composition of the vehicle fleet in 1999 (as per Ministry of Road Transport in Hyderabad for all except buses and per the AP Transport Department for buses) was 757,676 2-wheelers, 43,945 3-wheelers, 83,782 cars, 18,067 taxis and 5,996 buses.

Table 5-1 below shows reductions in tons per day resulting from an effective, city-wide PUC system where all vehicles in the city are tested per existing emissions checking regulations. The figures are based on several assumptions: 1) fuel efficiency improvement by doing minor maintenance is about 20% as defined in the VTA, so CO2 reduction is 20%; 2) approximately 20% of all vehicles tested fail and require maintenance; 3) the emissions load factor for each category of vehicle as defined in tons/day the VTA is multiplied by .2 x .2 = .4 to arrive at the emissions reductions shown. For example, the VTA notes the total CO2 emissions reduction for 2-wheelers could be up to 39 tons/day (total emissions from 2-wheelers = 969 tons/day or 969 x .4 = 39)

Table 5-1: Citywide PUC Emissions Reduction Potential in Hyderabad (tons/day)

	2-Wheeler	3-Wheeler	Car	Taxi	Buses
CO	.512	.109	.46	.128	.044
HC	.360	.074	.007	.024	.007
NOx	.007	.003	.006	.011	.073
CO2	3.87	.091	.082	1.29	.970

Source: SIAM

Table 5-2 below illustrates the relative emissions reductions that could accrue to implementation of a 10-station upgraded PUC system. The assumptions are that 10% of the vehicles in Hyderabad are tested and 20% fail and require maintenance. Emission factors from the VTA were utilized for the reduction calculations.

Table 5-2: Emission Reduction Potential from 10-Station PUC System (tons/year)

	2-Wheeler	3-Wheeler	Car	Taxi	Buses	Total
CO	153.6	32.4	13.8	38.4	13.2	**251.4**
HC	108.0	21.6	2.1	7.2	2.4	**141.3**
NOx	2.26	.855	1.87	3.312	22.1	**30.4**
CO2	1162.8	332.5	770	387.60	291.6	**2362.8**

[5] The checking procedure may need modification to enable computerization of the checking process and to minimize erroneous results.

vi) Computerization of Diesel Emission Checking System

Following the development of the emission checking system for petrol engines, equipment manufacturers are working with SIAM to design and implement computerized emissions checking for diesel vehicles. It has been suggested that the equipment manufacturers would formulate the specifications and test procedure for computerized diesel emission checking and give their recommendation to test agencies and the government.

d. *Emissions Loads in the Demonstration Project Corridor*

Comprehensive data on pollution loads in the demonstration corridor of NH 9 and in other areas of the city is being generated over time by the APPCB. The APPCB has set up a series of ambient air quality monitoring stations in the city and has recently completed a study of respiratory drug off-take as a proxy for understanding the relative health impacts of vehicular emissions in target areas of the city. Table 2-2 on the following page depicts shows the ground level concentrations of various pollutants at five monitoring stations. As can be seen, loads at the Panjagutta monitoring station are quite high, especially particulate levels (possibly owing to a high volume of buses and relatively, of transport vehicles). The "PM" figures reflect the relative size of particulate matter measured in microns.

While somewhat difficult to correlate the number of patients reporting to hospitals near the monitoring stations with vehicular emissions causes, data generated by the APPCB indicates that the number of patients reporting to hospitals in the Panjagutta area is at least two times greater than any other area in which monitoring is taking place. In combination with additional data being generated by the APPCB, there is growing evidence that vehicular emissions can be correlated with rising incidences of health problems. One may also assume that the health costs associated with those problems is rising as well, though no data is available to verify this assumption.

Table 2-2: Pollutant Concentrations at Various Monitoring Stations (micro gr/m^3)

Monitoring Location	NO_2	CO	PM	PM	PM	PM
PARADISE	11.68	48.89	97.41	107.72	112.73	122.63
PANJAGUTTA	12.41	51.96	186.0	205.70	215.3	234.2
ABIDS	12.46	52.16	150.9	166.80	174.6	189.9
CHARMINAR	8.34	34.93	60.41	66.80	69.91	76.05
NEHRU PARK	5.19	21.74	26.23	29.00	30.35	33.02

Source: APPCB

As noted previously, globally, the transport sector is estimated to contribute approximately 25% of total GHG emissions, primarily in the form of CO_2. Of greater significance is that worldwide, energy use is increasing faster in the transport sector than in any other sector and fastest of all in developing countries. From 1980 to 1997, transportation energy use and associated GHG emissions increased over 5% per year in Asia (excluding the former Soviet Union), compared to 1% growth in GHGs from all sectors worldwide (Pew Center, 2001)

Growth of GHG emissions from transport in India is considered to mirror the dramatic growth trend noted above. Support for this assumption is found in the recent and projected trends in vehicle ownership in major cities across India, where the populations of two-wheeler, three-wheeler, autos, transport trucks and buses have doubled, tripled, quadrupled or more over the past 10-15 years. Projected future growth rates in vehicle populations are equally as dramatic. Vehicle population growth in the city of Hyderabad, the location selected for implementing the demonstration project, reflects this trend as will be discussed later.

III. Transport Sector and Health

The major pollutants emitted by motor vehicles include CO, NOx, SOx, HC, and suspended particulate matter (SPM). These pollutants have damaging effects on both human health and ecosystem integrity. The human health effects of air pollution vary in the degree of severity, covering a range of minor effects to serious illness, as well as premature death in certain cases. Most of the conventional air pollutants are believed to directly affect the respiratory and cardio-vascular systems. In particular high level of SO_2 and SPM are associated with increased mortality, morbidity & impaired pulmonary function, lead prevents haemoglobin synthesis in red blood cells in bone marrow and impairs lever and kidney function and causes neurological damage.

More than 750,000 people annually in India are estimated to die premature deaths due to increasing air pollution as reported by Center for Science and Environment. In the mid –1990s, health spending amounted to 6% of India's gross domestic product, one of the highest levels in developing nations. A portion of this spending can be attributed to health costs associated with air pollution derived from the transport sector. Table 1-1 below summarizes hazards related to motor vehicle emissions.

Table 1-1: General Health Effects of Vehicular Emissions

Pollutant	Effects
CARBON MONOXIDE (CO)	Can affect the cardiovascular system, exacerbating cardiovascular disease symptoms, particularly angina; may also particularly affect fetuses, sickle cell anemia and young children. Can affect the central nervous system, impairing physical co-ordination, vision and judgment, creating nausea & headaches, reducing worker productivity and increasing discomfort.
NITROGEN OXIDES (NOx)	NO_2 can affect the respiratory system. NO and NO_2 where they play a part in photochemical smog formation, may contribute indirectly to increased susceptibility to infections, pulmonary disease, impairment of lung function & eye nose & throat infection.
SULPHUR OXIDES (SOx)	SO_2 can affect lung function
PARTICULATE MATTER (SPM & RPM10)	Fine particulate matter may be toxic or may carry toxic (including carcinogenic) trace substances, and can alter the immune system. Fine particulates can penetrate deep into the respiratory system irritating lung tissue, causing long-term disorders.
LEAD	Can cause brain damage, encephalopathy in children resulting in lower I.Q., death, hyperactivity & reduced ability to concentrate.

Source: Houghton & Hunter (1994) and The Economic Times (1997)

SECTION II. DEMONSTRATION PROJECT PROPOSAL FOR FINANCING

Executive Summary

Estimates indicate that the growth of GHG emissions from transport in India mirrors the dramatic growth trend in emissions around the world. Support for this assumption is found in the recent trends and future projections for vehicle ownership in major cities across India, where the populations of two-wheeler, three-wheeler, autos, transport trucks and buses have doubled, tripled, quadrupled or more over the past 15 years. To slow the growth rate of GHG emissions in urban areas, it will be necessary, therefore, to explore and employ various interventions for reducing local GHG emissions expected to arise from the dramatic increase in vehicle populations and from the aging of existing vehicles.

One of the major obstacles in understanding and moving towards resolving the problem of high emissions of local pollutants and GHGs is the lack of raw data. To date, there is no study in India that measures CO_2 emissions from in-use vehicles. This lack of data results in the analysis of GHG emissions from vehicles being conducted parametrically with certain broad level assumptions.

As automotive technology progresses, new and innovative means are being developed to reduce harmful pollutants released from vehicle emissions. Globally, emissions controls for in-use vehicles are an integral part of pollution control measures. As new technological controls are adopted, it has become apparent that older/less technologically advanced and/or poorly maintained vehicles are a major source of emissions, particularly in developing countries. It is estimated that old vehicles constitute over 60% of the total on-road vehicle population. While older vehicles in poor mechanical condition pose a particular concern for India, regular inspection and maintenance (I&M) can improve performance levels and keep emissions under control.

The GEP-CCS project being implemented by the Global Environment Team of The Louis Berger Group, Inc. for the USAID/India Mission provides technical assistance to diverse Indian stakeholders to facilitate a shift to a less GHG emission intensive development path. One component of the GEP-CCS project focuses on reducing the rate of growth of GHG emissions from vehicles. As part of this effort, GEP-CCS, SIAM and the Municipality of Hyderabad, in partnership, have initiated a transport sector pilot that incorporates a number of interventions designed to reduce the rate of growth of GHG emissions in both the pilot corridor and the city. These interventions include, among others, the: segregation of non-compatible vehicle streams; synchronization of traffic signals; provision for par-transit parking; rationalization of bus-stops; junction improvement; streamlining of traffic flows by improved signage; improvement of the carriage way; and the provision of slip roads. In addition to these traffic engineering and management interventions; the pilot includes a more efficient vehicle inspection and maintenance system to be implemented through the expansion, upgrade and training of the vehicle inspection system and PUC operators.

The PUC system is expected to monitor emission levels from in-use vehicles and is supported by provisions in the Central Motor Vehicle Rules (CMVR), 1989.

The Society of Indian Automobile Manufacturers (SIAM), with assistance from LBG/GEP-CCS, proposes to undertake a research study in the city of Hyderabad, India for measurement of GHG emissions from in-use vehicles. As part of this study, the SIAM intends to introduce and improve the emissions checking system within a limited area (pilot project area) as a model, using the data gathered from the pilot to assess the impact of the pilot interventions on GHG emissions. As part of the research project, four gases, CO, CO_2, O_2 and HC will be measured. Collection of this data will also aid in the creation of an emissions baseline for the transport sector in India.

SIAM plays a very important role in India promoting sustainable development in the automotive industry by focusing on technology developments which address environmental and safety issues. SIAM also provides a channel of communication for the automotive industry to the Government and national and international organizations.

This study will be implemented by utilizing the seven already existing Pollution Under Control (PUC) checking centers with the assistance of the Transport Department., a computer, a four gas analyzer, a web camera and an internet linkage at the seven centers to collect emission data of tested vehicles. Initially these seven, and progressively all of the remaining PUC checking centers in Hyderabad, would be networked to a centrally located computer under the control of Transport Department. The seven centers will be responsible for collecting the research data measurements for the above gases emitted from the tested vehicles. At the completion of each business day, the collected data would be uploaded and sent to the central computer. The central computer will be responsible for collecting data form the seven centers so that it can be processed/analyzed to generate local pollution estimates and link it to the GHG emissions from the transport sector by estimating the benefits in fuel consumption achieved by maintaining the vehicles reporting at the PUC Centers.

This document was prepared to enable a funding institution to consider grant assistance for the proposed research study, which will collect critical emissions data and examine the correlation between emissions and effect of maintenance for reducing emissions in the transport sector. The document that follows provides a detailed explanation of the intent, methodology, expected results, capital and operating costs, proposed financing pattern necessary to conduct this research project.

I. Introduction

One of the major hurdles in understanding the impact of transport activities is the lack of data on greenhouse gas (GHG) emissions from vehicles. The emission measurement from vehicles is usually carried out from the perspective of the emissions of air pollutants, especially carbon monoxide (CO). While these measurements may currently suffice for local government authorities in controlling the local air quality, the impact of use or increased transport activities on GHG emissions is rarely ever known. A study that is able to take advantage of the PUC system to generate actual data from vehicles of different types and vintages on Indian roads will be extremely useful. A study that is able to take advantage of the PUC system to generate actual data on GHG emissions (primarily CO_2) from vehicles of different types and vintages on Indian roads will be extremely useful in verifying earlier assumptions. This study will fill the critical gap by collecting the raw data necessary to provide both a benchmark on current emissions and information on the efficacy of certain interventions for improving the transportation emissions problems in India.

Data obtained from the study conducted by SIAM on vehicles in Hyderabad can also be utilized to demonstrate the effectiveness of procedures that can be implemented by a systematic, computerized municipal/national inspection and maintenance (I&M) program to reduce emissions. In the proposed computerized PUC certification program (Annex A), vehicles will be checked with the engine idling (for gasoline engines). For vehicles that meet the prescribed emissions requirements, a PUC certificate will be issued. Noncompliant vehicles would be advised on the actions needed in order to meet the stipulated emissions levels. These tests will also be utilized to monitor tailpipe emissions and high fuel consumption.

Improvements in the emission checking procedure through the introduction of a computerized PUC checking system and the utilization of more sophisticated equipment (i.e. the changeover from 2-gas to 4-gas analyzer) will enable the PUC centers to comply with existing as well as future vehicle emission norms and regulations set forth by the concerned regulatory authority. Additionally this project will improve the environmental integrity, credibility and acceptance of the certification process and thereby establish the discipline needed for periodic maintenance and certification of in-use vehicles.

II. Research Project Objectives

The primary objective of this research project is to collect comprehensive emissions data information on GHG air pollutants from vehicles and to generate a database on controlled inspection, systematic and regular maintenance and monitoring of out of compliance vehicles. This data would be analyzed and used as tools for taking necessary policy decisions.

III. Anticipated Outcomes

- Creation of a credible data bank for the emission performance of in-use vehicles.
- Support for policies that promote sustainable urban transportation and effective interventions
- SOPs for PUC centers

IV. Implementing Organization

Society of Indian Automobile Manufacturers (SIAM)

The Society of Indian Automobile Manufacturers (SIAM), a registered society under the Indian Societies Act, was established in 1960 and currently represents 34 leading vehicle and vehicular engine manufacturers. SIAM will be the implementing body for this research project. SIAM's principal focus is on technology development with an emphasis on addressing environmental and safety aspects of its member's products. SIAM plays a proactive role in all issues that promote the sustainable development of the automotive industry. SIAM has an important policy mandate, providing a channel of communication for the automobile industry to the Government, national and international organizations. The dissemination of information, therefore, is an integral part of SIAM's activities. SIAM employs publications, reports, seminars and conferences to deliver information and support its outreach initiatives. Biennially, SIAM organizes the Auto Expo series of Trade Fairs in cooperation with the Confederation of Indian Industry (CII) and Automotive Component Manufacturers Association of India (ACMA). Other initiatives include those focusing on technical, social, economic, and international events related to the automotive industry.

SIAM works proactively and in association with various international bodies and organizations on issues regarding technological improvements of the Indian automobile industry. More specifically, SIAM continuously interacts with various key Indian stakeholders on framing rules and regulations related to the automobile industry. SIAM's major technical focus includes:

- Supporting the development of new technologies in automobile industry.
- Aligning Indian standards with internationally accepted standards, with respect to emission and safety requirements.
- Promoting the use of alternative fuel vehicles.
- Conducting dialogue with the GOI and implementing agencies on plans for introducing advanced technologies.
- Promoting research and development in the Indian automotive industry.
- Managing the emission of in-use vehicles.

SIAM also plays a major role assisting GOI ministries in formulating economic policies related to the automobile sector. In the past, SIAM has worked with the Ministries of Heavy Industries and Public Enterprises, Finance, Commerce and Industry, Environment and Forest, Road Transport and Highways. SIAM has played an important role in providing technical assistance on issues related to direct and indirect tax policy and procedures, trade (EXIM) policy, WTO matters and issues related to auto policy such as vehicle registration and other commercial issues.

As part of SIAM's continuous efforts towards reducing vehicular pollution and improvement of the environment, they have organized a series of free inspection and maintenance camps for two, three and four wheelers in Bangalore, Chennai, Hyderabad, Kolkata, Mumbai and New Delhi in association with the Transport Departments of the respective states. SIAM has also been working with these six state governments to improve the existing emissions testing systems, and has introduced the concept of computerized emission test centers to address some of the deficiencies in the existing manual system.

V. Project Implementation

It is estimated that in Hyderabad more than 80% of on-road vehicles are in use and more than 60% of these vehicles are old and inefficient. Regular inspection and maintenance of these vehicles is instrumental in improving their fuel efficiency, resulting in more efficient fuel consumption, less pollution and the reduction of GHG emissions from the tail pipe. Although internationally, this is a generally accepted premise, there is no India specific scientific data to demonstrate the effectiveness of these interventions in India. With this proposed research pilot project at seven PUC centers in Hyderabad, credible data can be generated on vehicular emissions. This information can then be used demonstrate how GHG emissions from vehicles can be reduced through regular inspection and maintenance as well as through technological improvements in vehicle energy efficiency.

This proposed study would require controlled research conditions and SOPs to be adopted by the management of the PUC centers which are located in the transport pilot corridor. Accordingly, it is envisaged that the seven current PUC centers would be upgraded to adhere to project standards. Under the technical assistance of SIAM PUC centers would be trained, measurements would be conducted, and the collected data would be sent to the networked computer at the RTA where the data would be stored and analyzed.

A. The Emission Data Collection Process

The proposed research project would generate data on vehicular emissions at the seven PUC centers in the project area of Hyderabad. The centers would measure the emissions of four gases CO, HC, Carbon Dioxide (CO_2) and Oxygen (O_2) from the exhaust of vehicles being tested. The seven PUC centers participating in the proposed project would conduct the measurements using the gas analyzers and record the data in their respective computers. Throughout the day, the PUC centers would collect the data and send it through the established network to a main server at the completion of each day. The data protocol at the networked computer at RTA will decode the data and change it to a common database format, so as to store, retrieve, analyze and print the information from different makes of gas analyzers.
In order to save cost of creating a new Internet Protocol address and data space and other related expenses, the server is proposed to be co-located with the Internet Service Provider (ISP). Thus, the system will be capable of recording emissions data from different types of vehicles (two, three and four wheelers, trucks/buses etc.) having different years of manufacture. The database software would then be capable of plotting the emissions data of CO_2 and O_2 against CO and HC emissions This project is envisioned to be conducted for at least six months to a year. thereafter SIAM and the Transport Department will continue with the experiments for longer durations as required to assist researchers in generating various types of data. This data will be used to plotting the CO2 values against the existing local pollutants and the nomographs would be used to estimate CO_2 from other PUC Centers, which do not have a 4-Gas analyzer.

The features of the proposed pilot research project are as follows:

- **Emission Data** - Collected for CO, HC, O_2 & CO_2 at each of the PUC centers.
- **Gas Analyzers and Computers with Requisite Software** - Installed in each of the seven PUC centers.
- **A Centrally Located Networked Computer** - Equipped with necessary database software to enable processing of emissions data would be established at the transport Department office.

- **Vehicle Information** – Logged information, such as make, year of manufacture, cubic capacity and type of engine as mandated by the State Government.
- **The Central Computer System** – Transport Department would gather all data collected form the seven PUCs where it would be decoded based on the make of the gas analyzer and the information would be stored accordingly.
- **Periodic Reports** – RTA would generate reports that would include periodic reports on vehicular emissions and normative charts that would enable other PUC centers or the RTA to gage the emissions of CO_2 from the readings of HC and CO.
- **Operation of the Study** – SIAM would work in conjunction with the Transport Department to develop the project.

B. Research Project Pilot Area Selection

A series of criteria were used to evaluate six cities chosen by SIAM as potentially the most appropriate for the demonstration project. Nine criteria were defined based on SIAM's assumption that these best represent the profile of a city in which the goals of the research project could most successfully be achieved. Important key factors included the ability and willingness of the local government to support such a demonstration project; air quality and the availability of alternative fuels. During the selection process, it was discovered that the vehicle population growth statistics for the city of Hyderabad, were exceedingly concerning. Furthermore, upon discussions with the Municipal Corporation it appeared that Hyderabad was the most proactive and likely to actively support the demonstration project process. Hyderabad emerged as the preferred city for partnering on the demonstration project which would effectively demonstrate the identified interventions. This area covers the following sections of Hyderabad:

- Main traffic corridor between Khairatabad junction and ESI Hospital via Panjagutta and Ameerpet.
- The loop connecting Ameerpet to Panjagutta via Greenlands and Rajiv Statue Junctions.
- Raj Bhavan Road, which links Rajiv Statue Junction with Khairathabad, to the demo area.

The above mentioned pilot project area includes residential, commercial, industrial neighborhoods. The main transport feature is the major arterial, NH 9, which connects Mumbai to the north and Vijayawada in the southeast. The length of NH 9 within the demonstration area is approximately 4.5 km. The Greenlands loop includes the Greenlands and Rajiv Gandhi Statue junctions.

List of Pollution Check Centers Shortlisted for Networking (2 more centers will be included in this list)

1.	Sanath Nagar Service Station	30/98	Neptune	Mr Abhish Kumar 7-2-1813, Erragadda Hyderabad – 500 018 Tel: 23817219
2.	M/s Venkateshwara Motors	19/94	Netel	Mr A K Sharma C/o Ashok Service Station IOC, Erragudda Hyderabad – 500 018 Tel: 27202857/ 27295978 Cell: 9849025320 Office: 27201185/86 – Ext 241
3.	Full Moon Service Station	26/95	Netel	Mr Anand Kumar Naredi 6-3-873, Begumpet Hyderabad – 500 016 Tel: 23412008/ 23402618
4.	RTA Khairatabad, Pollution Checking Centre	002	Manatec	Transport Department RTA, Khairatabad Hyderabad Tel: 23312895
5.	R K S Motor Pvt. Ltd.			Mr Maheshwar Rao 6-3-1119, Nishat Bagh Begumpet Hyderabad – 500 016 Tel: 23412419/ 23416666

C. *A Systematic Measuring Tool: Data Collection System*

The research data collected under this research program will be compiled from seven PUC centers located in the demonstration pilot corridor in Hyderabad. The centers will be linked to a central server located at the Internet Service Provider. Other PUC centers of the city would be brought into the networking system gradually. The data received from the individual PUC center each day would then be stored in the network server. This data would be accessed by a central control station computer located at the Transport Department office where it would be processed and analyzed periodically.

The computerized networking system would be comprised of the following:

- **Data Recording System** - All parameters and video images of the vehicle captured will be stored as record in database in respective computer. This stored data will provide the basis for various reports. This subsystem would also be located at the seven PUC centers.

- **Centralized Database** - The data collected from different PUC centers would be uploaded into the MASTER DATABASE. The proposed Network procedure shall transmit the data from the individual PUC centers to the MASTER DATABASE on a daily basis through Internet connection. This would be located at the hired server space at ISP.

- **Connectivity to the Centralized Database** - The Control stations at the Transport Department would also have access to the centralized database through secure Internet Protocol in order to download, process, generate reports and review the performance of the system periodically. This will help the authorities in preparing suitable policies in future.

Schematic diagram of the various blocks for the proposed Computerized Networking System is shown in Figure 2

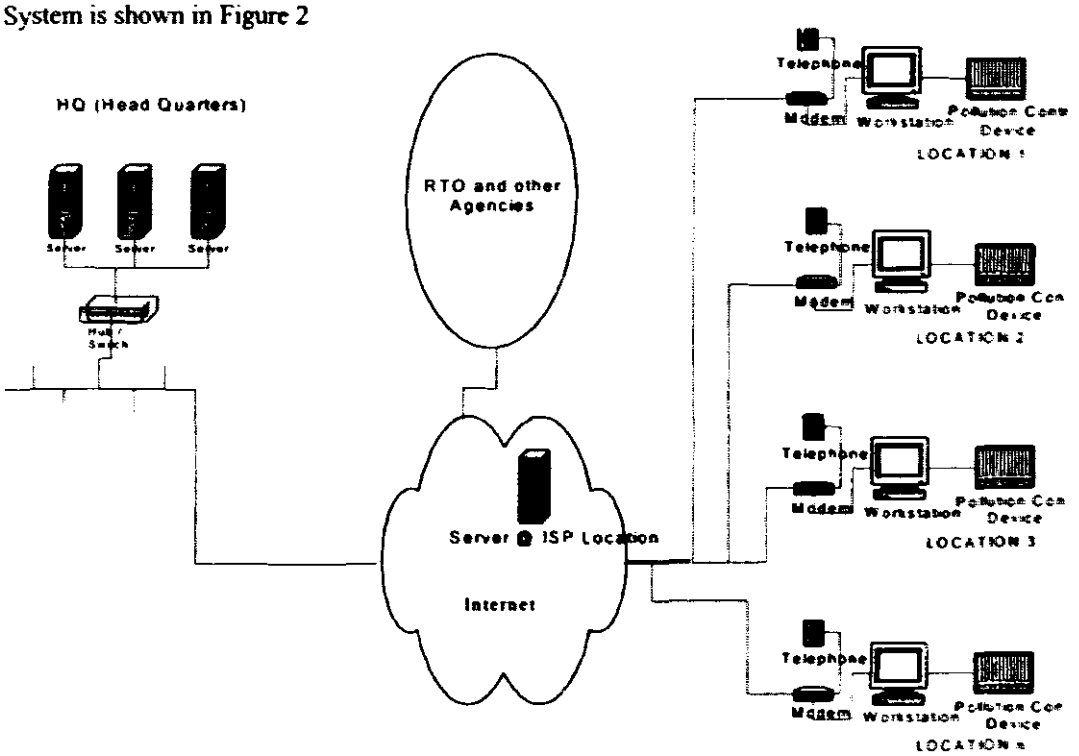

Figure 2: Schematic Diagram of the Various Blocks for Computerized Networking System

D. Location and Infrastructure Facilities

The computerized system at PUC centers would be located at the existing emission test centers authorized by the State Govt. The computerized emission check center would have enough space for maneuvering and parking the vehicles reporting for emission checks.

A cubicle of suitable size is required for the computer hardware including a printer and the gas analyzer. There also shall be sufficient space for a trained operator to move inside the cabin. The cabin would be appropriately designed to protect the systems from heat, dust and water. It will also have the necessary power supply required for operating the gas analyzer and the computer system. Outside the cabin a web camera would be mounted to capture information such as the registration plate.

VI. GHG Emission Reduction Aspects

Transportation is by far the most visible urban activity that leads to emission of both local air pollutants and greenhouse gases (GHG). P. R. Shukla[7] et al identified the transportation sector as one of the seven priority areas for India with 60 Tg/yr CO_2 emissions. It is estimated that the Indian transport sector contributes about 16% of the total GHG emissions. Another concern is that India has the highest vehicle growth rate of 15% as compared to developed countries (0.4% - 4%). GHG emissions from transportation sector are mainly from vehicle tail pipes and mostly comprise carbon dioxide and nitrous oxide. Peculiarly, higher values of CO_2 may in fact indicate complete combustion in the vehicle engine, and it would therefore be more desirable to improve GHG emissions per kilometer. Lesser efficient vehicles indicate lower emissions of CO_2 but higher values of other air pollutants such as carbon monoxide (CO) and un-burnt hydrocarbons (UHC). Worldwide the vehicular pollution control regulations stipulate measurement of these pollutants and the suspended particulate matter (SPM).

The aim of Inspection and Maintenance (I&M) programs is to measure performance of on-road vehicles at regular intervals and suggest maintenance for vehicles failing the tests. Such programs have been introduced in many countries. In the U. S. the Environment Protection Agency (EPA) approves and keeps track of the state I&M programs. The proposed research study is based on expanding the scope of the standard I&M programs at the pilot corridor PUC centers to include the emissions of GHGs. Because it is not currently mandatory to measure emissions of GHGs from exhaust of vehicles, this study proposes to generate valuable data that can inform the policy and planning process to enable cleaner transport in Indian cities.

As discussed earlier, the maintenance of vehicles will help in improving the combustion efficiency thereby giving higher mileage per liter of the fuel. This in turn will reduce the emission of CO and UHC and optimize emission of CO_2. Thus, the conditions inside the engine of the vehicles would decide the emissions of pollutants. It has been observed that the norms for emissions of GHGs are not available in order to judge the performance of vehicles. The proposed study would help in collecting valuable data on these factors to establish a benchmark by which to measure improvement, and as the study continues, and data on the efficacy of the I & M interventions in the pilot corridor. This data will also assist in preparing charts of GHG emissions from different varieties and vintage vehicles.

The exact proportion of vehicles that might fail the tests is not known due to the lack of data. SIAM has conducted few vehicle checking camps in select Indian cities including Hyderabad. Based on these studies it is observed that ~ 20% of the vehicles may fail the tests (i.e. not meet the CO and UHC limits.) According to Harrington and McConnell who studied the Arizona enhanced I&M database, the probability of failure of a vehicle depends on the age and is found to grow from 1.0% for new vehicles to 6.8% for a five-year-old vehicle and 19.8% for a 10-year-old vehicle. (Refer Figure 3).

It is further assumed that the originally failing vehicles will meet the limits after they undergo suggested maintenance. This has been substantiated in the Arizona study, where the probability of a failed vehicle never passing was studied and found to be low. Thus, of the originally tested vehicles, the probability of vehicles that will never pass the test was

[7] Climate Change and India, Issues, Concerns and Opportunities, Ed. P. R. Shukla, Subodh Sharma, P Venkata Ramana, Tata McGraw Hill, October 2002

1.6% (0.01% for new to 5.5% for a ten year old vehicle). Thus, it can be reasonably concluded that the initially failing vehicles will meet the margins post maintenance.

Figure 3: Probability of Failure of Vehicles

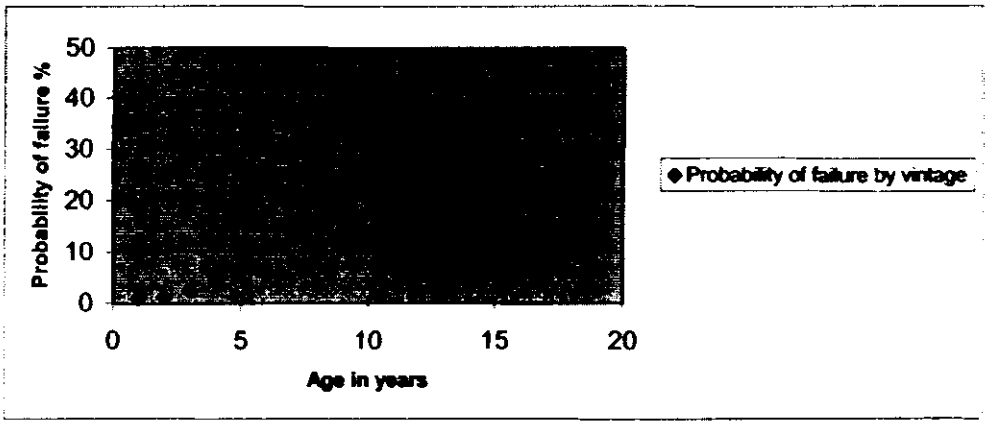

Ref: Harrington, W; McConnell V. D., Cost and Car Repair: Who Should be Responsible for Emissions of Vehicles in Use? From E&M Feature by K. John Holmes and R. J. Cicerone July 2002

With the maintenance of the vehicles, the emission reduction achieved by the vehicle is the real benefit accruing from the I&M program. As discussed earlier, the concentration of pollutants like CO and UHC are proportional to the reciprocal of CO_2 concentrations. During the earlier phase of the transport GHG emission project under GEP-CCS, SIAM conducted a vehicle technology assessment. In this phase, SIAM conducted a literature survey and identified a correlation between concentrations of CO and CO_2. The SIAM study is based on CO_2 emissions from new vehicles and assumes that the relationship between specific fuel consumption (KM/Litre) and CO_2 emissions (gm/Vehicle KM) is linear.

Few studies have been conducted to estimate GHG emissions from transport sector in India. One of these studies was conducted by PEW Center for the city of New Delhi. The estimates of GHG emissions from various categories of vehicles for the year 2000 is as indicated in Table 1 below. Under the above assumptions regarding the proportion of vehicles failing in the inspection and the composition of vehicles of different vintage and type/make, the likely GHG emission reductions with effective implementation of the PUC system in the Hyderabad city was estimated.

Table 1: GHG Emissions for Vehicles and Fuels in Delhi
CO2-equivalent grams/vehicle-kilometer[8]

	2000		
	(km/liter)	(g/vehicle-km)	tCO2/KM
Gasoline Motor Scooter (2-stroke)	38.4	118	0.000118
Gasoline Motor Scooter (4-stroke)	53.8	70	0.000070
Electric Motor Scooter*	N/A	51	0.000051
Gasoline Mini car	24.9	140	0.000140
Gasoline Car	13.6	293	0.000293
Diesel Car	20	172	0.000172
CNG Car	N/A	234	0.000234
Electric Car*	N/A	182	0.000182
Diesel Bus	3.27	963	0.000963
CNG Bus	N/A	1050	0.001050

Though it is not possible to quantify exactly the extent of GHG emission reductions that an effective PUC system intervention may achieve, SIAM conducted a parametric estimation based on the design specifications given by the manufacturers. It may be noted that the emissions of the CO_2 from the exhaust are measured only once, during the road certification by the manufacturer. Based on these figures available from its constituents and the deterioration factor in terms of reducing specific mileage per unit volume of fuel consumption and several assumptions, SIAM calculated the emission reduction possible from the intervention. These are discussed in more detail in the report on the demo project design and reproduced below.

Table 2: Citywide PUC Emissions Reduction Potential in Hyderabad (tons/day)

CO	.512	.109	.46	.128	.044	**1.25**
HC	.360	.074	.007	.024	.007	**.472**
Nox	.007	.003	.006	.011	.073	**.100**
CO_2	3.87	.091	.082	1.29	.970	**6.30**

Table 3: Emission Reduction Potential from 10-Station PUC System (tons/year)

CO	153.6	32.4	13.8	38.4	13.2	**251.4**
HC	108.0	21.6	2.1	7.2	2.4	**141.3**
NOx	2.26	.855	1.87	3.312	22.1	**30.4**
CO_2	1162.8	332.5	770	387.60	291.6	**2362.8**

[8] *Source: Transportation in Developing Countries: Greenhouse Gas Scenarios for Delhi, India Prepared for the Pew Center on Global Climate Change; Ranjan Bose, K.S. Nesamani, Tata Energy Research Institute, Geetam Tiwari, Indian Institute of Technology-Delhi, Daniel Sperling, Mark Delucchi, Lorien Redmond Institute of Transportation Studies, University Of California, Davis, Lee Schipper International Energy Agency May 2001*

It can be seen from the above table, the expected GHG emission reduction from employing a computerized, systematic I&M program would be around 2362 tons each year.

VII. Research Project Financial Structure

The project comprises two main components, one at the PUC test centers and other during the networking of the centers. As discussed earlier, under this research project, data will be collected from the measurement of GHG emissions from the transport sector. This would require additional equipment at the PUC Checking stations for appropriate monitoring and evaluation. The networking system would also store the data centrally and make it available for analytical purposes. The level of confidence of the emissions data would be credible if the collection is carried out for longer periods. Accordingly, it is believed that to reach appropriate level of data collection, the research study should be conducted for at least a one year period. It is expected that once the SOPs, data collection and the management system are developed and perform, additional PUC centers will be upgraded and networked into the central server.

Accordingly, there are two major cost components for the project (i) at the seven PUC test centers and (ii) in the Networking and Data collection/analysis. A few facts are noteworthy.

- The Government of Andhra Pradesh has decided to make it mandatory for the PUC centers in Hyderabad to install computers to record the measurements and issue certificates by November 30, 2002. Presently all the PUC Centers in Hyderabad are computerized and no manual certificates are allowed.

- The RTA has in principle decided to install a networking system to collect data from all over the city that could later be employed to issue notices to the vehicle owners failing to get their vehicle tested.

- The pilot demonstration project area, which was identified under previous GEP-CCS activities, has been the basis for selecting the PUC Centers. The majority of these are located at gas filling stations owned by the oil companies (IOC, BPCL or HPCL). After discussions with some Centers and Transport Department in Hyderabad, it was decided to include seven of these centers in the proposed pilot project. The shortlisted PUC Centers, based on the understanding of the overall project concept, need etc., are given in the previous section.

A. PUC Centers Equipment Costs

The activities under the proposed research study would require the following facilities at each of the seven PUC centers:

- Owned/rented space at the PUC center
- Data acquisition system comprising a Four-Gas Analyzer with necessary hardware and software for recording and preliminary processing of the data
- A data recording system comprising of a desktop computer with desired configuration along with necessary peripherals viz. printer, web camera, UPS, Modem and telephone line and essential software
- Cost of operating the measurement system for a research period of one year

SIAM has been operating local pollution control camps in many cities. Through these it has access to several vendors who supply all these equipment. The estimated cost of the PUC is as follows:

Cubicle	20,000	140,000
Computer	46,500	325,500
Printer	6,000	42,000
Web camera	4,000	28,000
UPS, Modem, Telephone	8,500	59,500
Four gas analyzer	200,000	1,400,000
Total Capital cost	285,000	2,280,000

Thus, the total estimated cost of the PUC component is Rs. 34.14 lacs. The details of the estimates are provided bellow:

- Total area of the

Labor	*4000 X 12 X 7* = 3,36,000
Consumables, Telephone, Internet	3,22,000
AMCs	70,000
Electricity, water etc.	70,000
Rent, Insurance etc.	336,000
Total Op. Cost for Year 1	**1,134,000**
Total Cost	**3,414,000**

Cubicle would be 30 m^2 (25 m^2 open and 5 m^2 cubicle).

- The computer would be at least Pentium III processor with 128 MB RAM, 20 GB HDD, 52X CD ROM Drive, modem for enabling transfer of information through internet to the network computer and a 500 VA Uninterrupted Power Supply system.
- The printer would be an inkjet color printer.
- The web camera would enable inserting the picture of each of the vehicles on the certificate as well as the records of the networking system.
- The gas analyzer would have capability to measure four gases from the vehicle exhaust and record the information in the local computer to enable analysis.

B. Networking System Costs

The data on GHG emissions and other vehicle emissions from the PUC centers would be transmitted via Internet to the networked computer centrally located at the premises of the Regional Transport Authority (RTA). The use of space at an Internet Service Provider at the RTA office requires the necessary equipment:

- Space to house the servers and control stations.
- Two servers (one stand by).

- Test equipment and maintenance tools.
- Standard and customized software for data collection and processing for database.
- Office equipment, communication set up and furniture and fixtures.
- Provision for deposit for hiring server space and Firewall at the ISP.
- Cost of managing/operating the measurement system for a research period of one year.

SIAM has estimated the cost of the proposed networking system by inviting budgetary quotes from few consultants who have carried out similar work. Accordingly the cost of this component is as given below.

Computers and servers	200,000
UPS & Cabling	60,000
Licensed/custom Software	200,000
Deposits for server/ISP	70,000
Sub Total	**5,30,000**
Labor	200,000
Consumables	25,000
AMCs	40,000
Power/water etc	20,000
Rent to ISP	50,000
RTA Official Man hour Cost	110,000
Sub Total Op. Cost for Year 1	445,000
Grand Total	***9,75,000***

The total cost of the Networking component is estimated at Rs. 9.75 lacs. The details of the estimates are provided as follows:

- The space requirement at the facility of RTA is estimated at around 20 m^2.
- The two PCs with Pentium IV 1.9 GHz, 256 MB RAM, 40 GB HDD, would act as servers for this pilot project. As the project grows for catering to the entire city of Hyderabad, a separate high capacity server would have to be procured.
- The software would be customized software that would enable recognizing the type of gas analyzer used by individual PUC Centers, data switching and arranging in the right places, database management and retrieval etc. This would be specifically developed for the research study project and its subsequent operation.

C. *SIAM Management Cost*

As discussed earlier, the research project would be operated by SIAM with the overall guidance of the Task Force for a period of one year. SIAM would facilitate the operation during this period by offering the technical assistance to the RTA staff as well as support to the PUC operators on an as-needed basis. SIAM shall depute its experts for intervals during the first year. The cost to be incurred by SIAM is estimated as follows:

Manpower (40 man days @ Rs.5,000/manday)	200,000
Travel (6 person trip to Hyderabad)	120,000
Lodging Boarding	90,000
Communications	25,000
Inauguration Cost	1,00,000
Total SIAM cost	**5,35,000**

The total cost of project management by SIAM is Rs. 5.35 lacs. Thus, the total cost of the proposed research for a period of one year is estimated at Rs. 49.24 lacs.

VIII. Financial Sustainability

The Proposed Research Study would establish a system for the measurement of local pollutants and would be used for estimating the reduction of CO_2 emissions, from vehicular transport by proper emission checking process. Such dependable and authentic data does not exist today in India. In view of the nature of the study, SIAM requests a grant to assist in the support of the study. The participants in the project would also contribute to the project both in cash and in-kind. This would be a model project with an immense potential of being replicated by all State Governments. The individual contributions of the stakeholders are as follows and elaborated on below.

A.

PUC Center operators	1,869,000	38.0%
RTA	160,000	3.2%
SIAM	125,000	2.5%
Total Promoters' contribution	**2,154,000**	**43.7%**
Grant requested ICICI/USAID	2,770,000	56.3%
Total Funds	4,924,000	100.0%

PUC Center Operators

The PUC center operators would essentially bring in contributions to bear on the cost of the cubicle and computer hardware and will also bear the cost of one-year operation. Thus, out of a total cost of Rs. 34.14 lacs for the PUC component, the operators would bring in Rs. 18.69 lacs (55 %). The contribution of the PUC operators as a percentage of total project cost would be 38 %. It is envisaged that the PUC center operators shall return the existing 2-gas analyzer and set off Rs. 20,000 against the 4-gas analyzer. This is expected to bring in additional inflow of Rs. 1.40 lacs.

B. RTA

As RTA is a Government department, its contribution shall be limited to bearing the operating cost, which would essentially cover providing space, bearing manpower cost earmarked by the department for this activity and other operating costs. Out of the total cost of the Networking component of Rs. 9.75 lacs, RTA's contribution would be Rs. 1.60 lacs (16%). However, as a proportion of the total project cost, RTA's contribution would be about 3.2%.

C. SIAM

SIAM is committed to piloting cleaner automobile technologies and would allocate experts/engineers to Hyderabad for the project. The SIAM management cost for the project is indicated. One of the PUC Centre short- listed for networking has already been using a set of equipment financed by SIAM. It is envisaged that SIAM will bear 50% of the manpower cost and communications cost. Out of total expenses of Rs. 5.35 lacs, SIAM will bring in Rs. 1.25 lacs (23 %), which works out 2.5 % of the overall research project cost.

D. Financial Analysis

It may be noted that the proposed project is a research project to generate data on greenhouse gas emissions from vehicular transport. As such, its profitability need not be estimated. In other words, the measurement of GHG emissions from the vehicle tail pipe would not generate major additional revenue. While traditionally, such research studies are not expected to be "self-sustaining" in the long term, an attempt has been made to examine whether or not gathering this critical data could be self-sustaining on a voluntary basis. While the PUC operators would generate cash from certification of vehicles and would also support the additional cost of networking as part of the normal PUC center activities; these are not incremental benefits comparable to the additional measurement/study of GHG emissions. It is observed that the PUC operators generate earnings from year one and the cash flows from their operations would be sufficient to support the GHG measurement in ensuing years if there was interest in doing so. Similarly, it is observed that the networking operation starts earning from year two onwards. This would help the RTA in justifying the continuation of GHG measurement.

Annexes

Annexes

A	PUC CERTIFICATION PROCESS
B	RESEARCH STUDY IMPLEMENTATION TEAM STRUCTURE
C	TASK PROFILE
D	EQUIPMENT REQUIREMENTS FOR PUC CENTER

ANNEX A:
PUC CERTIFICATION PROCESS

ANNEX A:
PUC CERTIFICATION PROCESS

Under the PUC certification program, vehicles would be examined with the engine idling (for gasoline engines), and with the engine revving in neutral (for diesel engines). If the emissions data is within the prescribed limits (CO 3% v/v for four wheeled petrol vehicles and 4.5% for two wheelers), a PUC certificate is issued. For noncompliant vehicles, proper improvements would be required prior to receiving a PUC certificate.

The computerized PUC system will have the following features:

- Recording of vehicle information
- Emissions checking of the vehicle
- Issuance of PUC certificate

Recording of vehicle information: The PUC center will be equipped with a web camera, a computer along with a printer and a four-gas analyzer. All equipment will be interconnected to facilitate on-line recording of data gathered from the vehicle emission test checking. This equipment will be housed in a suitable cabin (cubicle) except the web camera, which will be located outside the cabin and mounted so that it can capture the photograph of the registration number plate. The basic information of the vehicle such as vehicle owner's name and address, model, make and year of manufacture of the vehicle etc. will be recorded in the computer before undergoing for the emission checking.

Emission checking of the vehicle: Once the recording of vehicle information is complete, the measuring port of the gas analyzer will be fitted to the tail pipe of the vehicle to measure the emission from the vehicle. SIAM would train the PUC operators on a standard operating procedure for enabling correct measurements. Emission will be checked with the engine idling (for gasoline engines), and with the engine revving in neutral (for diesel engines). The gas analyzer and the computer monitor will display the values of the pollutants i.e. CO, HC, CO2 and O2 of a 4-gas analyzer. Once the CO reading is stable the information will be saved in a document along with the registration number plate recorded by the camera

Issuance of PUC certificate: If the vehicle is compliant, a blank pre-printed format of the certificate will be printed generating all the relevant details and will be issued to the owner. If the vehicle is noncompliant, a "*rejection slip*" will be printed and issued without the photograph. The rejection slip will have the details of the vehicle along with the time and date of test. The vehicle failing the emission test will be required to make the necessary improvements before re-checking for emission. Though the computer printer will print the value of the legislated pollutant (CO in this case), all the other data would be stored in the hard disc of the computer.

The eight PUC centers would be uploaded with measurement details of vehicles tested during the day and sent to the network server at the close of business every day where it would be stored and analyzed. SIAM would develop the necessary Internet protocol and the necessary customized software.

ANNEX B:
RESEARCH STUDY IMPLEMENTATION TEAM STRUCTURE

ANNEX B:
RESEARCH STUDY IMPLEMENTATION TEAM STRUCTURE

Implementing Agency: SIAM would implement the data generation study with the PUC center owners and the Transport Department for the computerized networking system respectively. SIAM would bring the perspective of the vehicle manufacturers to I&M system and also will act as a link for outreach initiatives to disseminate the findings of the study nation wide.

Implementation Plan: SIAM will coordinate the project with the PUC centers, ICICI and the RTA. It will also act as a grantee and control the utilization of the grant fund for developing the research study with the PUC centers and the networking component. SIAM will coordinate with Transport Department and Software companies to oversee the project implementation. SIAM will act as a secretariat for the computerized networking system.

It is proposed that RTA would deploy its personnel for operating the networking system. SIAM will hire a private agency, which would supply, install and maintain the software for the entire networking system. SIAM and the private agency would also provide training to the RTA staff and the PUC operators for operating the system and analyzing data/information generated there from.

ANNEX C:
TASK PROFILE

ANNEX C:
TASK PROFILE

The Task to be convened by each of the following agencies:

Transport Department

- Formulate necessary regulations for implementation of the PUC Pilot program (mandating, making changes in Fee Structure, authorizing new PUC Centers if required, etc.)
- Shall allocate manpower to handle the data and prepare reports every month. The officials should be adequately trained to interpret the data and provide policy directions.

PUC Center owners

- Set up the gas analyzers, computers and upload data on a regular basis
- Test vehicles as per the standards laid down by the Government and provide feedback from its operation
- Store the data as per the desired format of the Transport Department
- Agree to run the project for a period as decided

Society of India Automobile Manufacturers (SIAM)

- Management of the project – mainly coordination, organizing outreach events etc. over-viewing Trial runs
- Manage the grant funding to implement the research study in coordination with ICICI Bank
- Oversee procurement of additional hardware wherever required
- Suggest development of appropriate software for operation, data formats required for the new system and provide it to the PUC center owners and
- Technical support for the project

ANNEX D:
EQUIPMENT REQUIREMENTS FOR PUC CENTERS

ANNEX D:
EQUIPMENT REQUIREMENTS FOR PUC CENTERS

- **Gas Analyzer:** - for Petrol Vehicles. A four gas analyzer presently being used would be utilized by the project The demo project would essentially record four-gases viz. CO, HC, CO2 & O2.
- **Computer:** The computer should have a printer to print emission test certificates and a UPS to avoid loss of data. The computer and server would have the following minimum hardware and software:

Hardware Specifications (min):

Computer:

Processor	Intel Celeron700 MHz/Pentium III
CPU/Peripherals	128 MB RAM, 20 GB HDD, 1.44 MB FDD 52x CD ROM, 14" color monitor, Web Camera Color Inkjet Printer 9 pin or equivalent comport for interfacing with Gas analyzer

Equipment at the Networking Facility:

IBM Xeon based server

- 2.4 GHZ
- 512 KB Cache
- 512 GB RAM
- 2 nos ethernet (10/100/1000)
- 2 nos Power supplies
- RAID 1 on board
- 2 nos 36.4 GB HHDD
- 15" Color Monitor
- 20/40 GB DAT Drive
- Oracle 9i Database

Software Requirements:

The Software for the PUC centers will have the following features:

- Whenever a new record is selected for checking a vehicle, the serial number would be *self generated.*
- The front-end screen of the software shall have necessary fields to key in the necessary data as required by the State Govt.
- The front-end screen shall have necessary drop down menu lists against the make and model of the vehicles.
- After entering the required data the user would be able to *start* the test.

- As soon as the user saves the data, the photograph would be saved simultaneously.
- The certificate would appear on the screen and a *print* option would be available for printing the same.
- The saved data would be available along with the photograph for *quick viewing* for at least 7 months. The data saved is *tamperproof.*
- The user would be able to *retrieve the data* as and when required for submission to the Transport Department. The format of the data to be submitted to be finalized by the State Government.
- The software has a "Report Generator" facility, which will be able to generate reports on daily, monthly, and yearly basis.
- A summary – builder would be integrated in the software which will give a report on number of vehicles checked, passed and failed for a given period.
- The Gas Analyzer and the Computer monitor will display the value of all the pollutants i.e. CO, HC, CO_2 and O_2 if it is a 4-Gas Analyzer and CO and HC if it is a 2-Gas Analyzer. Once the CO reading is stable, the operator has to click the save button with the camera focused properly on the registration number plate. If the vehicle passes the test, a blank pre-printed format of the certificate has to be placed in the printer and the certificate should be printed with all the relevant details. If the vehicle fails a *"rejection slip"* will be printed without the photograph.
- The rejection slip will have the details of the vehicle along with the time and date of test.
- The data would be stored in the computer and options to print the required fields as per the requirement of the operator would be provided. Though the computer printer will print the value of the legislated pollutant (CO in this case), all the other data would be stored in the hard disc of the computer.
- The software details and format will be finalized as per the recommendations from State Transport Department.

Software required for the PUC interconnect system shall consist of the following three tier architecture:

- At the top tier there will be a web browser as the user interface. The primary purpose of the browser is data presentation and data entry. The information collected on the basis of emission tests carried out on vehicles will be available at the Personal Computer (PC) at the respective PUC centers. After necessary validation this information will be sent to the central database.
- The second tier will have the web server and the business logic. The web server will handle the requests of the browser and deliver the same over the network. Necessary security will be incorporated to authenticate and authorize the services to the users. The middle tier will authenticate and establish the session between the browser and the web server. The information inputs from the browser are not committed to the

database directly but are validated for consistency and integrity prior to committing to the database.

- The bottom tier is the database tier that stores the information until the system requires it. Proper design of the database will handle different requests for data and reports.