I2
333.91009567
H343
v.4

PN ACS-592 19718

FINAL REPORT VOLUME IV

HYDROLOGICAL SURVEY OF IRAQ

APPENDIX D

ELECTRONIC COMPUTER STUDIES OF IRRIGATION OPERATIONS

A REPORT BY

HARZA ENGINEERING COMPANY
CHICAGO

BINNIE & PARTNERS
(FORMERLY BINNIE, DEACON & GOURLEY)
LONDON

IN ASSOCIATION

PREPARED FOR

THE GOVERNMENT OF IRAQ
MINISTRY OF AGRICULTURE

BAGHDAD, IRAQ JULY 1963

A

GENERAL CONTENTS
VOLUME IV

TABLE OF CONTENTS

APPENDIX D

EXHIBITS

LIST OF VOLUMES

VOLUME I - MAIN REPORT

VOLUME II - APPENDIX A
Hydrologic Network and Data

VOLUME III - APPENDIX B
Flood Potential

APPENDIX C
Flood-Control Operations

VOLUME IV - APPENDIX D
Electronic Computer Studies of
Irrigation Operations

B

COPY

HARZA ENGINEERING COMPANY
CONSULTING ENGINEERS
CHICAGO, ILLINOIS 60606

June 15, 1964

Air Mail

Mr. Kenneth F. Vernon
Chief, Public Works and Industry Branch
NASA/Engr. Bureau of Near East and South Asia
Agency for International Development
Department of State
1901 Pennsylvania Avenue
Washington, D. C.

Subject: Hydrological Survey of Iraq - Final Report

Dear Ken:

Some last minute rearranging of Exhibit B and Table 7.4 of Volume I of the subject report resulted in several errors of tabulated data. These do not affect the remainder of the report in any way. Corrections were made in ink to most of the originally distributed reports.

Replacements for these two pages are enclosed for insertion in the copy of the report we sent you on November 1, 1963.

Very truly yours,

HARZA ENGINEERING COMPANY

V. A. Koelzer

Enc: 2 correction sheets

correction sheets inserted 10/13/64
MRR

C

VOLUME IV - TABLE OF CONTENTS

		Page
APPENDIX D		
Chapter D-1	GENERAL EXPLANATION OF THE ELECTRONIC COMPUTER STUDIES	
	Introduction	D- 1
	History	D- 1
	Formulation of the First Trial Program	D- 2
	Revisions to the First Trial Program	D- 4
	Coding of the First Trial Program	D- 5
	Present Status of the Program	D- 6
Chapter D-2	DETAILED EXPLANATION OF THE ELECTRONIC COMPUTER STUDIES	
	Introduction	D- 8
	Flow Diagrams	D- 9
	Flow Diagram 1, Overall Program	D- 9
	Flow Diagram 2, Monthly Calculations	D-10
	Flow Diagram 3, Derbend-i-Khan Discharge and Contents	D-12
	Flow Diagram 4, Diyala River, Linkage Canals, and Tigris at Samarra with Wadi Tharthar Not in Use	D-15
	Flow Diagram 5, Provisional Discharges from Wadi Tharthar and in Tigris at Samarra	D-16
	Flow Diagram 6, Firm Requirements from Phased Reservoirs	D-17
	Flow Diagram 7, Potential Shortage at Fatha	D-18

VOLUME IV - TABLE OF CONTENTS (cont'd.)

		Page
Chapter D-2	DETAILED EXPLANATION OF THE ELECTRONIC COMPUTER STUDIES (cont'd.)	
	Flow Diagram 8, Evaluation of Coefficients in Phasing Equations and Solution of Phasing Equations	D-19
	Flow Diagram 9, Eski Mosul Discharge and Contents	D-20
	Flow Diagram 10, Bekhme Discharge and Contents	D-20
	Flow Diagram 11, Dokan Discharge and Contents	D-20
	Flow Diagram 12, Fatha Discharge and Contents	D-20
	Flow Diagram 13, Final Discharges from Wadi Tharthar and in Tigris at Samarra	D-21
	Flow Diagram 14, Contents of Wadi Tharthar and Discharges in Tigris below Samarra	D-22
	EXHIBITS	

Chapter D-1

GENERAL EXPLANATION OF THE ELECTRONIC COMPUTER STUDIES

Introduction

1.1 The Tigris irrigation operation studies were worked by electronic computer, using the facilities of International Business Machines United Kingdom, Limited, in London. The IBM program consists of a set of mathematically expressed instructions for the electronic computer, enabling the computer to operate a variable system of reservoirs on a monthly basis.

1.2 This chapter covers the general procedure for the machine operation of the studies. It explains the relationship between the hydrological aspects of the studies, as determined by the engineers, and the mathematical aspects, as interpreted by mathematicians and solved by the computer. Chapter D-1, along with Chapter D-2, is designed to provide information which will minimize the work involved in future studies to test new criteria or conditions.

History

1.3 The use of electronic computers was specifically authorized in the 1955 negotiations for the establishment of the Hydrological Survey of Iraq. Early in the Hydrological Survey program the use of such computers was investigated in some detail by the Chicago office of Harza Engineering Company and the London office of Binnie, Deacon and Gourley. Preliminary irrigation operation studies, which had been worked by hand, were considered in detail to determine their adaptability to electronic computation.

It was decided that an electronic computer would be used and that the studies should be run in London.

1.4 As a result the two companies retained the services of Mr. H. A. Morrice, Irrigation Adviser to the Sudan Government, and Mr. W. M. Allan, Irrigation Consultant to the Sudan Government, who had successfully worked out methods of using the IBM Type 650 electronic computer for a thorough study of the Nile River and its tributaries. It was apparent that the experience of Messrs. Morrice and Allan would effectively reduce the programing time required for the Tigris studies and thus make the use of the electronic computer more practicable. The studies were supervised by the Hydrological Survey with Messrs. Morrice and Allan furnishing technical consultation services in preparing the program for machine computation. Mr. Allan also acted as coordinator between the Hydrological Survey and IBM during the actual machine runs.

Formulation of the First Trial Program

1.5 Discussions were held in London in August 1957 between representatives of the Hydrological Survey and IBM, with the two consultants participating. The purpose of the discussions was to adapt the methods that had been used on the Nile River to the different conditions obtaining on the Tigris River. The arrangement of reservoirs, inflows, offtakes, and connecting canals considered in the irrigation operation studies is shown schematically on Exhibit D-1.

1.6 It was recognized that basically the Tigris problem is twofold. In the first place, Baghdad and other metropolitan areas must be protected against high floods; second, the available water must be utilized for

irrigation and other purposes to as great a degree as possible. The first problem calls for an analysis of flood peaks with a time interval measured in hours; the second, for a long-term analysis in which a calendar month is a suitable time interval. The first problem is covered in Chapters 3 and 4 and Appendices B and C; the second is the subject of Chapters 5, 6, and 7 and this appendix. The dividing line between the two problems can be taken as a set of rule curves. For various dates these curves give the maximum reservoir contents, above which water storage will not normally be allowed to rise.

1.7 The first major decision to emerge from the London discussions was that the operation studies should provide for keeping the various reservoirs in phase, with approximately equal probabilities of refilling, insofar as physical conditions permit. The second decision was that the program should be capable of including Fatha Reservoir in the system. A phasing point was selected from which irrigation requirements would be distributed among upstream storage reservoirs in such a way as to keep them in phase. This phasing point was originally considered to be at Fatha when Fatha Reservoir was included and at Samarra when Fatha Reservoir was not included.

1.8 A decision was made to consider all inflow between the three upstream reservoirs (Dokan, Bekhme, and Eski Mosul) and Fatha to be concentrated at Fatha, so that this inflow would not be considered in meeting irrigation requirements above Fatha. This step simplified the computations and was justified in that irrigation requirements in the Greater Zab and Upper Tigris basins are small in proportion to available flow and in that inflows on the Lesser Zab below Dokan Dam are too flashy for effective use for local irrigation. Similarly all inflow between Fatha and

the mouth of the Diyala River was considered to be concentrated at the mouth of the Adhaim River.

1.9 Several more problems of detail were also settled at the London discussion. Symbols were assigned for various terms used in the computations carried out by the computer. The meaning of these symbols is given in Exhibit D-2. Flow diagrams were developed for each step in the computer operation. These flow diagrams, including revisions, are discussed in detail in Chapter D-2 and are shown on Exhibit D-3. A further refinement arising from the discussions was the introduction of symbols for the percentages of normal irrigation demands to be satisfied in summer and winter. The purpose of this step was to increase the flexibility of the program; its use is demonstrated in Chapter D-2 and Flow Diagram 1 of Exhibit D-3.

1.10 The maximum possible discharge from a reservoir depends upon the content of the reservoir, which in turn varies through the month. To make allowance for this situation a special subroutine was worked out and included in the flow diagrams for each reservoir. It was decided that such a refinement is not justifiable for the calculation of evaporation losses.

1.11 The flow diagrams of Exhibit D-3 are divided into branches whenever necessary to provide for the alternative inclusion or elimination of a reservoir. In general the operations to be performed by the computer will be reduced according to the number of reservoirs eliminated during a particular study.

Revisions to the First Trial Program

1.12 The original trial program was written in September 1957 by the staff in London and contained all refinements and modifications up to

that date. It was later reviewed thoroughly by the staff of the Hydrological Survey of Iraq, and several changes were made to the flow diagrams. The principal changes were as follows:

a. The Gibralter and Damir Kapu reservoirs were eliminated since they provided only temporary detention and would not enter into any irrigation operation studies worked on a monthly basis.

b. The "transmission coefficients" were eliminated to simplify the program. Changes in historical bank losses that would occur owing to river regulation were dealt with by manual adjustments to the results derived from the computer, as described in Chapter 5 of the Main Report.

c. The phasing of upstream reservoirs was all based on Fatha whether or not Fatha Reservoir was included. This approach increased the flexibility of reservoir releases and further reduced the need for distribution coefficients.

d. Provision was made for three levels of summer irrigation deliveries and two levels of winter irrigation deliveries. (In the studies actually run, only one level of summer shortages and no winter shortages were considered.)

e. Provision was made whereby percentage of specified irrigation deliveries for the land served by Dokan and Derbend-i-Khan reservoirs could be made different from the percentages met in other areas. (This provision was never actually used.)

f. The procedure for computing storage withdrawals from Tharthar Reservoir was changed.

g. There were several minor changes and rearrangements in the flow diagrams.

Coding of the First Trial Program

1.13 The revised flow diagrams were coded in London by the IBM staff for use by the electronic computer. When the coding was completed, a member of the Hydrological Survey staff went to London to supervise

the first group of production runs. During his stay the following revisions were made in the program:

a. Provision was made for intermittent flow in the linkage canal system between the Lesser Zab and Diyala rivers to keep Derbend-i-Khan Reservoir more or less in phase with the other upstream reservoirs.

b. Provision was made for meeting navigation requirements below Kut.

Present Status of the Program

1.14 The completed program as documented herein is designated as "1.1." It is very flexible and can therefore be adapted to a wide variety of assumed conditions by proper choice of criteria. A special form, designated Form 20 (see Exhibit D-4), was devised for tabulating the various items that might change from one run to another. Criteria that are not appropriate to a particular run can be eliminated from the computations by inserting proper values in Form 20. Although there are more than 50 values that might change, in actual practice only a small number would vary from one run to another in the same study. As an example, if the same percentage of full irrigation requirements is to be provided for all areas, the following criteria are irrelevant: K_1, K_2, K_3, K_4, K_5, and K_6. If scheduled shortages are to be restricted to one level of summer shortage, the following criteria are irrelevant: x_2, y, $S_{(cc)2}$, and $S_{(cc)3}$. In addition, for any given reservoir combination the changes in remaining criteria would be small.

1.15 Production experience with Program 1.1 revealed the need for certain changes as listed below:

a. The elimination of the cycling experienced at some reservoirs, in particular at Dokan Reservoir,

b. Elimination of the occasional small flows at Kdns resulting from the phasing computations,

c. Revision of the criteria for determining whether or not to schedule summer irrigation shortages.

These changes were incorporated into a revised program in April 1958, designated as Program 1.2; they are shown in Exhibit D-5.

Chapter D-2

DETAILED EXPLANATION OF THE ELECTRONIC COMPUTER STUDIES

Introduction

2.1 This chapter describes in detail the computations as carried out by the electronic computer. It is intended to demonstrate both the strategy and the tactics of the methods adopted, but it is not a line-by-line explanation of the entire computation procedure. Exhibits D-1, D-2, and D-3 contain materials pertinent to the explanations on the following pages.

2.2 The monthly machine computations consist of three major steps as follows:

a. Determination from reservoir content of the percentage of full irrigation demands that will be met,

b. Determination of the sources of the irrigation water supply,

c. Routing of flows through the system.

Step a. is performed by the machine only on the first of June and the first of November. It sets the values to be used through the remainder of the summer and winter season respectively. Computations for this step are outlined in Flow Diagram No. 1 (see Exhibit D-3). The second and third steps are represented schematically in Flow Diagrams Nos. 2-8 and 9-4 respectively (see Exhibit D-3). The remainder of this chapter treats each of these steps by referring to the relevant flow diagrams in turn.

2.3 The other exhibits deal with more particular details and procedures. Exhibit D-6 enumerates the basic data which must be supplied to the computer

8

for each study and indicates those items which may vary from run to run; it also lists the items which comprise the computer's punched output. Exhibit D-7 compiles all the instructions necessary for operating an IBM Type 650 computer and running through the programed study. Exhibit D-8 gives the meansing of the column headings on the printed output sheets that contain the results of the operation studies. Exhibits D-9 and D-10 give, respectively, reservoir evaporation data and rule curve values used in the studies.

Flow Diagrams

Flow Diagram 1, Overall Program

2.4 This flow diagram, giving the overall picture of the computations, represents the hydrological fact that the winter or the summer irrigation requirements or both may be reduced, but that in May full irrigation requirements are satisfied ($p = p_1$). The reason that a full supply is always delivered in May is that this is a month of heavy snowmelt, when in systems with small reservoir capacity the uncontrolled flows frequently exceed the demands. Also, if a forecasting equation is ever incorporated into the program for estimating summer inflows, then June first is a much better forecasting date than May first. The coefficient for a full supply, designated p_1, is not necessarily unity, so proportional increases or decreases in irrigation requirements can be studied without punching additional data cards.

2.5 The deliveries for the months of June through October are dependent on the total reservoir content on June first, while those for November through April are dependent on the November first total reservoir content. The studies presuppose that when reduced supplies are anticipated the area of land to be irrigated will be reduced. In actual practice

reservoir contents and shortages can be foreseen sufficiently in advance of the two key dates with enough accuracy to permit an orderly cropping plan. The program segregates the total reservoir content on June first into three ranges separated by the specified constants $S_{(cc)1}$ and $S_{(cc)2}$. If the total content is in the top range, full requirements will be met ($p = p_1$); if in the middle range, x_1 times full requirements will be met ($p = x_1 p_1$); if in the lower range, x_2 times full requirements will be met ($p = x_2 p_1$). The procedure for determining winter deliveries is similar except that the November first total content is segregated into only two ranges by the constant $S_{(cc)3}$ and that the irrigation requirement that will be met is either p_1 or yp_1. Any or all of these scheduled shortages can be eliminated by proper selection of the various $S_{(cc)}$ values in the input data.

2.6 It was expected that in some studies it might not be possible to deliver as high a proportion of full irrigation requirements to the areas served by Dokan and Derbend-i-Khan reservoirs as to the other irrigated areas. Consequently a provision was introduced into the program whereby the irrigation deliveries from these reservoirs could be reduced further, depending on how much of the water stored in the whole system was stored in Dokan and Derbend-i-Khan.

Flow Diagram 2, Monthly Calculations

2.7 This flow diagram indicates the strategy of the monthly computations. The remaining flow diagrams, the sequence of which is shown in Flow Diagram 2, comprise the tactics and are briefly described in the following paragraphs.

2.8 The monthly computations begin in Flow Diagram 3 with Derbend-i-Khan Reservoir because this is the most nearly independent unit of the system, all other reservoirs depending to a greater degree on conditions in other parts of the system. The actual discharge for the reservoir is computed at this point in the program.

2.9 In Flow Diagram 4 the flows in the linkage canal system are computed and computations of flow required for navigation are made. If Wadi Tharthar is not used for irrigation storage the determination of flows required at and below Samarra is also made at this stage.

2.10 Flow Diagram No. 5 is applicable only when Wadi Tharthar is used for irrigation storage. The outflow from Tharthar and required flow below Samarra are computed here.

2.11 In Flow Diagram 6 the firm local demands on Dokan, Bekhme, and Eski Mosul reservoirs are computed, and in Flow Diagram 7 the potential shortage at Fatha (whether or not Fatha Reservoir is included) is determined (a) for the condition of no releases from upstream reservoirs other than those to meet firm local demands and (b) for the requirement of drawing down Fatha to a target content before releasing water for Fatha from upstream reservoirs. This shortage can be either positive or negative.

2.12 It is desirable that the reservoirs upstream from Fatha be filled to the same degree or "in phase." In order to accomplish this a set of simultaneous equations is formulated in Flow Diagram 8 from computations made in Flow Diagrams 6 and 7. The solution of these equations appears in Flow Diagram 8.

2.13 The computations of water demands are completed in Flow Diagram 8. In Flow Diagrams 9 through 12 the actual operations of Eski Mosul, Bekhme, Dokan, and Fatha reservoirs are determined in that order.

2.14 In Flow Diagram 13 the final discharge from Wadi Tharthar and flow past Samarra are computed, and in Flow Diagram 14 all flows at downstream points are determined.

2.15 The various flow diagrams are explained in detail in the following pages.

Flow Diagram 3, Derbend-i-Khan Discharge and Contents

2.16 This flow diagram starts out with a determination of the flow from the linkage canal system into the Diyala River. The purpose of this part of the flow diagram is to keep Derbend-i-Khan Reservoir roughly in phase with the other reservoirs. This is done by comparing its content with that of Dokan Reservoir, which in turn is phased with other upstream reservoirs. If the content of Derbend-i-Khan Reservoir is greater than a preselected percentage of the content of Dokan Reservoir, the flow from the linkage system is cut off.

2.17 The remainder of the flow diagram is essentially a standard storage reservoir routine. The flow diagrams for Eski Mosul, Bekhme, Dokan, and Fatha reservoirs, Flow Diagrams 9 through 12 respectively, are almost identical; therefore, Flow Diagram 3 will be described fully and the others only briefly.

2.18 The first estimate of the discharge from Derbend-i-Khan, N_{d1}, is that required to satisfy (a) the irrigation demands in reach NG and

(b) the offtake at Diyala Weir plus (c) the specified minimum discharge over that weir, G_{dc}, and (d) G_{it} when negative (as the result of historical diversions). The Adhaim-Diyala Feeder supplies part of these requirements, and so its contribution, G_q, which has previously been determined, is deducted from the demand to give the net figures for N_{d1}.

2.19 It is now necessary to determine whether by supplying this discharge various maximum and minimum criteria for discharges or content would be infringed upon. The first step is to compare N_{d1} with N_{d2}, the specified minimum allowable discharge. The minimum may depend upon hydroelectric power or simple amenity. If N_{d1} is less than N_{d2} it must be increased, giving N_{d3}. The next step is to compare this revised estimate for N_d with N_{d4}, which is the maximum physically possible discharge. The latter will depend upon the size of the outlets and spillways and upon the level of the reservoir. If these data are known, a table can be prepared to show the values of N_{d4} corresponding to the contents, N_c. The machine carries such a table in its memory and uses it to estimate N_{d4}. Alternatively, in the general case it may be necessary to find what size the outlets and spillway should be for a dam not yet designed. In that case, N_{d4} could be made infinite (in practice very large) and sluices and spillways designed in accordance with the tabulated results.

2.20 Since the content of the reservoir almost always changes in the course of the month, the discharge physically possible at the end of the month will often be less than that possible at the beginning. In this case the use of N_{d4} will result in an error. To avoid this, a further revised discharge, N_{d5}, is calculated; this is not greater than the discharge possible at the mean contents during the month. The latter is calculated by successive approximation, using a subroutine which is set out in Flow Diagram 15.

2.21 In the subroutine a first value, N_{ds1}, is taken equal to N_{d3}. Using N_{ds1}, the contents at the end of the month, N^*_{cs}, and hence the mean contents during the month, N_{csav}, are calculated. From the latter is derived a second value of the possible discharge, N_{ds2}. This is then compared with the desired discharge, N_{d3}. If N_{ds2} is the greater, N_{d3} is acceptable as N_{d5}. But if N_{ds2} is less, it is then compared with the first value, N_{ds1}. If the difference between them is greater than five cumens, the computation loops back to the beginning of the subroutine, using the value of N_{ds2} for N_{ds1}; new end-of-month and mean contents and another discharge are computed. This process goes on until the approximate discharges have converged to within the specified limit, thus giving N_{ds2} as an acceptable value for N_{d5}. Of course if N_{d3} is not greater than N_{d4}, N_{d5} equals N_{d3}, and the subroutine is not required. The same form of subroutine is used for other reservoirs, as specified in Flow Diagrams 9 through 12.

2.22 Strictly speaking a similar subroutine should be used for evaporation. It is felt, however, that the error introduced by calculating evaporation losses on the basis of initial contents only would be too small to warrant the extra programing effort.

2.23 Once discharge criteria are satisfied, the reservoir content is determined. The continuity equation indicates whether or not N^*_{c1} exceeds N^*_{cmin} as specified by the lower rule curve (which will normally be dead storage content). If it does not, N_{d6} is calculated to bring the contents just down to the rule curve. N_{d6} must be checked to ensure that it is not negative. If negative, N_d is zero; if positive, N_d is N_{d6}. If N^*_{c1} exceeds N^*_{cmin}, we compare it with N^*_{cmax}. If it is less than N^*_{cmax}, then N_d is N_{d5}. If, however, it exceeds N^*_{cmax}, we calculate

N_{d7} as the discharge necessary to lower the contents to N^*_{cmax}. One further check is necessary, that N_{d7} does not exceed N_{d4}, the maximum possible discharge. If it does not, N_d is N_{d7}. If N_{d7} does exceed N_{d4}, however, it is necessary to go through the subroutine described above for the maximum discharge physically possible.

2.24 The final value of N_d has now been found, and by simple continuity the final contents are determined.

Flow Diagram 4, Diyala River, Linkage Canals, and Tigris at Samarra with Wadi Tharthar not in Use

2.25 The computation proceeds down the Diyala River to Diyala Weir (G). The discharge over Diyala Weir is calculated as Derbend-i-Khan discharge plus the outflow from the link canal minus the irrigation offtakes X_{ng} and X_g plus the torrential inflow G_{it}.

2.26 Proceeding up the Adhaim-Diyala Feeder, the discharge at its head, A_u, is calculated as that at the tail plus irrigation offtakes in between. The discharge at the tail of the Zab-Adhaim Feeder, A_q, is A_u plus the minimum flow down the Adhaim, A_{dc}. The discharge over the Adhaim Weir is derived simply.

2.27 The computations then proceed up the Zab-Adhaim Feeder to calculate its head discharge, L_u, in the same way A_u was calculated. The Makmour Canal supplies a specified discharge, L_q. Finally, the discharge at the head of the Makmour Canal, Z_u, is calculated as tail discharge plus offtakes.

2.28 Strictly speaking the computations have determined demands up the linkages, not actual discharges, and at a later stage the actual discharges should be carried down the linkages. Since, however, the linkages

are among the first supplied by Bekhme and Dokan reservoirs, their requirements will always be met unless the reservoirs are empty. In such a case failure to meet the linkage requirements would be indicated by values of Z_d and L_d less than Z_{dc} and L_{dc} respectively. Since a recomputation of these linkage flows would greatly complicate the IBM program, it was decided that on the rare occasions where such information might be required, the recomputations would be done manually.

2.29 After computing the flow in the linkage canals, Flow Diagram 4 determines the flow needed at Kut to satisfy navigation requirements.

2.30 It is then asked whether or not Wadi Tharthar Reservoir is used for irrigation storage. If not, the requirements from Kut up as far as Samarra are determined, and the computations then go to Flow Diagram 6, bypassing Flow Diagram 5. If Wadi Tharthar Reservoir is used for irrigation storage, the computations go directly to Flow Diagram 5.

Flow Diagram 5, Provisional Discharges from Wadi Tharthar and in Tigris at Samarra

2.31 First it is determined whether or not there will be any flow from above the Diyala confluence, Y, besides the contribution from Tharthar. This is done by adding the resources and demands in reach SY and determining the flow needed at Samarra to meet these or by using the minimum flow at Samarra, whichever flow is greater. By again computing the resources, which now include the tentative flow past Samarra, S_{d1}, and the demands, any excess shows up as a negative value of unsatisfied irrigation demands in reach SY, or X'_{sy2}. These surpluses and surpluses from the Diyala River when applicable are now applied to reduce W_{d1}, which is made to equal the unsatisfied irrigation demand in reach YK. Since the

16

surplus, if any, in reach SY is indicated by a negative value of X'_{sy2}, the term is added to reduce W_{d1}.

2.32 It is next asked whether or not water is available in Tharthar. If it is, the first trial value of Tharthar outflow goes through the appropriate limitation tests, and an outflow, W_{d4}, from Tharthar results. If this outflow is less than the initial trial value, the deficiency is made up by increasing the flow past Samarra.

2.33 In calculating the end-of-the-month contents of Wadi Tharthar Reservoir we apply the continuity equation. In reality this equation should include inflow into the reservoir, which will not be calculated until we reach Flow Diagram 13 of the computation. In order to avoid this complexity, we assume that Wadi Tharthar will supply in any one month only water which is in the reservoir at the beginning of that month. This is fully justified by the fact that the storage in the reservoir is very large in proportion to inflows and outflows. The end-of-month content, W^*_{cp}, calculated in this flow diagram is fictitious. If W^*_{cp} is less than the command content, W_{cc}, then W_{d4} is that discharge which will bring the content down to command content. Otherwise W_{d4} is equal to W_{d3}. In case W_{d4} should be negative, W_{d5} is zero. S_{d2} is then calculated by means of W_{d5}.

Flow Diagram 6, Firm Requirements from Phased Reservoirs

2.34 The three upper reservoirs, in addition to supplying unsatisfied Tigris demands at Fatha, must also supply local demands upstream of Fatha. In this flow diagram are calculated these demands, D_{da}, and M_{da} upon Dokan, Bekhme, and Eski Mosul respectively, or whichever one is in the system. It is first necessary to calculate S_{d3} as the greater of S_{d2} (see Flow Diagram 4 or Flow Diagram 5) and S_{dc}.

2.35 Dokan must supply the irrigation requirements of reach DL, the discharge at the head of the Zab-Adhaim Feeder not met by the tail discharge from Makmour Canal, and also the minimum allowable discharge over the barrage.

2.36 For Bekhme a first estimate of required supply, B_{da1}, is the head discharge of the Makmour Canal, the irrigation requirements of reach ZF, and a fixed portion of those of reach FR. A second estimate, B_{da2}, is the head discharge of Makmour Canal plus the minimum allowable discharge, Z_{dc}, over Makmour Weir. B_{da} is the greater of B_{da1} and B_{da2}.

2.37 Similarly, M_{da}, the firm requirement from Eski Mosul, is the greater of M_{da1} (irrigation requirements in reach MF and a fixed portion of those in FR) and M_{da2} (irrigation requirements in reach MF plus the minimum allowable discharge, F_{ic}, in the Tigris upstream of the Greater Zab confluence).

2.38 All reservoir releases to meet local demands are checked against the minimum releases D_{d2}, B_{d2}, and M_{d2}.

Flow Diagram 7, Potential Shortage at Fatha

2.39 The program first determines whether or not Fatha Reservoir is in the system. If Fatha is included, the summation of demands is carried one reach upstream from Samarra to Fatha by taking into account the irrigation demands in that reach. This step gives R_{d1}, which is compared with R_{d2}, the minimum allowable discharge below Fatha. R_{d3} is the greater of the two values.

2.40 The next computation is to determine what the end-of-month content of Fatha Reservoir would be if there were no discharge reaching

Fatha from the three upstream reservoirs (or reservoir sites) and no upstream irrigation diversions. This potential content, R^*_{cp}, is subtracted from a target content, R^*_{ct}, to get a first value, R_{s1}, of the potential shortage in the reservoir.

2.41 If Fatha is not in the system the potential shortage at Fatha, R_{s1}, is the required discharge past Samarra plus the demands between Fatha and Samarra minus the natural inflows between the damsites and Fatha.

2.42 If one or more of the upper reservoirs is eliminated from the system, then its inflow will reach Fatha and will reduce the shortage while remaining irrigation diversions will increase the shortage. If one or more of the upper reservoirs is included in the system, then the Fatha shortage will be reduced by the amount that the firm reservoir release exceeds local demands. It is of course necessary to check that the shortage is not negative, in which case it is put equal to zero.

Flow Diagram 8, Evaluation of Coefficients in Phasing Equations and Solution of Phasing Equations

2.43 The physical condition which the phased reservoirs must satisfy is that at the end of any one month they should be "equally filled," where the "fullness" is defined as the ratio of contents in excess of the rule curve minimum value for the month to the allowed variation between maximum and minimum content at the end of that month. Mathematically this is expressed by

$$\frac{D^*_{c1} - D^*_{cmin}}{D^*_{cmax} - D^*_{cmin}} = \frac{B^*_{c1} - B^*_{cmin}}{B^*_{cmax} - B^*_{cmin}} = \frac{M^*_{c1} - M^*_{cmin}}{M^*_{cmax} - M^*_{cmin}} \quad (1),(2)$$

2.44 The shortage at Fatha (R_s), which is to be supplied from these reservoirs, has already been determined. The terms d, b, and m are defined as the proportion to be supplied from Dokan, Bekhme, and Eski Mosul respectively, i.e.

$$d + b + m = 1, \tag{3}$$

and

$$D_{dl} = D_{da} + dR_s, \tag{4}$$

$$B_{dl} = B_{da} + bR_s, \tag{5}$$

$$M_{dl} = M_{da} + mR_s. \tag{6}$$

2.45 Then Flow Diagram 8 gives the formal solution of these equations. Positive values of d, b, and m satisfying equations (1) through (6) are found (negative solutions are physically inadmissible), and hence the demand discharges D_{dl}, B_{dl}, and M_{dl} are determined. This apparently elaborate method is adopted to facilitate the exclusion of any reservoir from the system in cases where d, b, or m becomes negative or where it is required to exclude a reservoir for a particular computing run for some other reason.

Flow Diagram 9, Eski Mosul Discharge and Contents
Flow Diagram 10, Bekhme Discharge and Contents
Flow Diagram 11, Dokan Discharge and Contents
Flow Diagram 12, Fatha Discharge and Contents

2.46 With the computation of D_{dl}, B_{dl}, and M_{dl} in Flow Diagram 8, the summation of demands has been completed to the head of the system. The next step is to calculate the actual discharges from the head to the tail of the system. This is the routing referred to in the Introduction to Chapter D-2 as step c. (For the Diyala River and linkage canals steps b. and c. are combined in Flow Diagrams 3 and 4.)

2.47 The standard storage reservoir routine, described in detail for Derbend-i-Khan in Flow Diagram 3, is also applicable to these four reservoirs. If any of these reservoirs is not in the system, its discharge is of course equal to its inflow less any local offtake.

Flow Diagram 13, Final Discharges from Wadi Tharthar and in Tigris at Samarra

2.48 The previous flow diagram carried the routing downstream to Samarra by deducting the diversion in reach RS. This diversion actually is made at Samarra but is considered to be in the reach.

2.49 When Wadi Tharthar is not used for irrigation storage, Flow Diagram 13 is essentially by-passed.

2.50 When Wadi Tharthar is used for irrigation storage, excess flows at Samarra are diverted into it provided that these excess flows do not exceed the inlet channel capacity, in which case the flows are diverted only to the capacity of the channel.

2.51 The computations then proceed downstream to the Wadi Tharthar outlet channel. The discharge to be given from this channel has already been tentatively computed (W_{d5} in Flow Diagram 5), but it was not then known whether or not there would be a surplus discharge from upstream, such as spill from reservoirs. If there is such a surplus, the revised requirements from Wadi Tharthar, W_{d6}, is calculated as the first estimate, W_{d1}, adjusted for the difference between the earlier (X'_{sy2}) and later (Y_{idn1}) figures for the flow of the Tigris River upstream from the Wadi Tharthar outlet. W_{d6} is then checked to make sure that it is neither greater than Wadi Tharthar can supply (W_{d7}) nor negative (W_{d8}). The resulting provisional end-of-month content of Wadi Tharthar, W^*_{c1} is then

checked against the reservoir rule curve, and the final values of S_u and W_d are determined.

Flow Diagram 14, Contents of Wadi Tharthar and Discharges in Tigris below Samarra

2.52 The final content of Wadi Tharthar is computed on the basis of final values of inflow, outflow, and evaporation.

2.53 The next step consists of computing the actual flow at all key points from Samarra to Kut. At a point upstream of the Wadi Tharthar outlet channel the flow is computed both with and without the non-usable "torrential" component, A_{it}.

2.54 The last step is to compute the residual flow at the end of the system both including and excluding the non-usable torrential flows, A_{it} and G_{it}. This step concludes the monthly computations.

Exhibit D-1

DIAGRAM OF CHANNELS AND CONTROL POINTS, INFLOWS AND OFFTAKES, PROGRAMS 1.1 AND 1.2

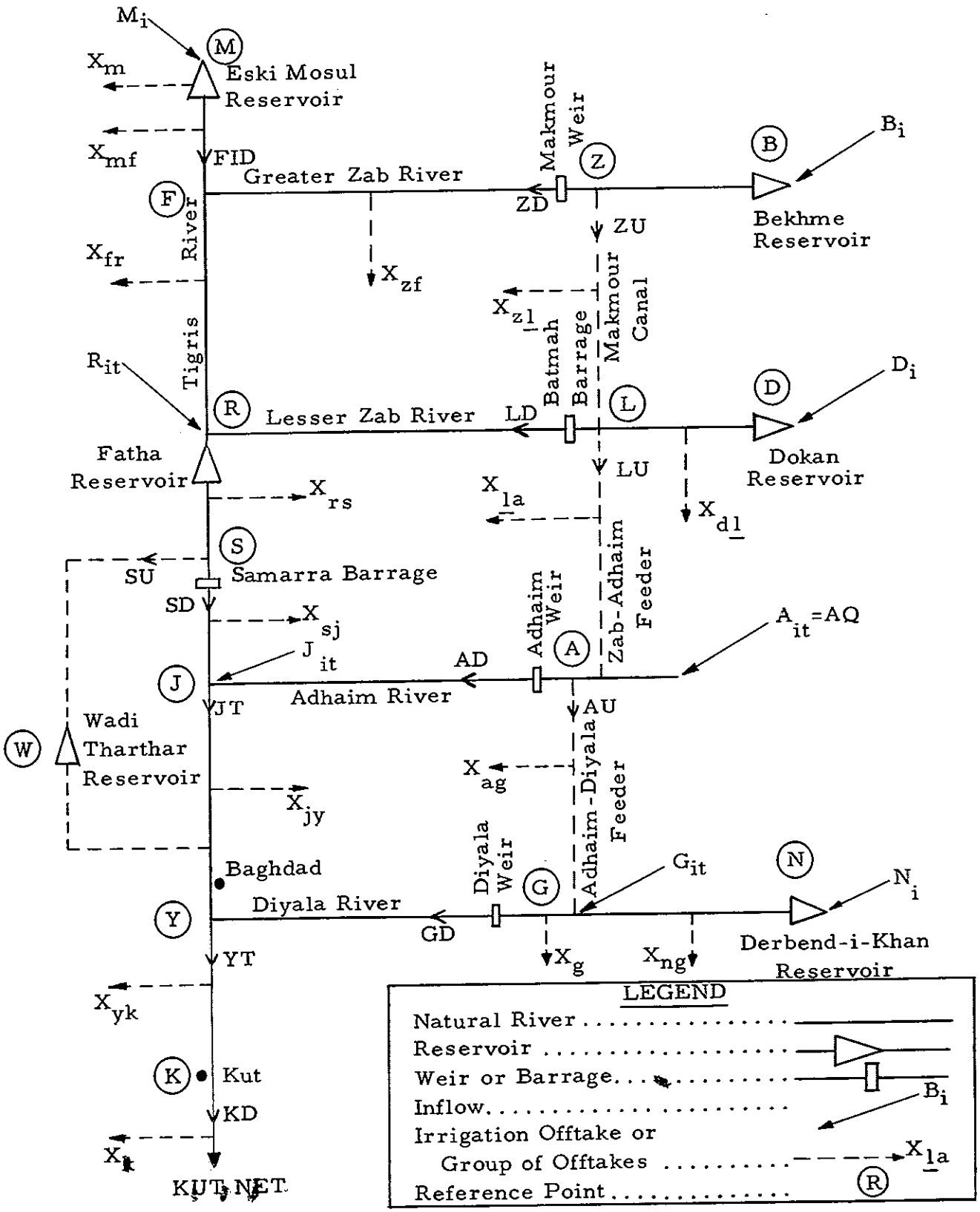

Exhibit D-2

MEANING OF SYMBOLS USED IN COMPUTER STUDIES

A	a	Adhaim Weir
B	b	Bekhme Reservoir
-	b	Bekhme phasing coefficient (not subscript)
-	c	Reservoir content
-	cav	Average contents for month
-	cc	Reservoir command content
-	cp	Provisional reservoir content, omitting controlled inflows
-	cs	Content in a subroutine
-	csav	Average content for month in a subroutine
-	ct	Target reservoir content
D	d	Dokan Reservoir
-	d	Controlled discharge, may be followed by a subscript digit, but is never associated with another subscript letter (except with "s" in a subroutine)
-	d	Dokan phasing coefficient (not subscript)
-	da	Discharge required to satisfy demands on a reservoir for reaches above phasing point
-	dc	Critical discharge (minimum) in river below a "structure"
-	dgs	Gross surplus discharge
-	dns	Net surplus discharge

Meaning of Symbols Used in Computer Studies (continued)

-	ds	Discharge in a subroutine
-	e	Evaporation loss (As a prefix it is used with p as a coefficient to X_{dl}, X_{la}, X_{ag}, X_{ng}, and X_g.)
F	f	Confluence of Great Zab with Tigris
G	g	Diyala Weir
-	i	Natural non-torrential inflow to a storage reservoir or reach
-	ic	Minimum allowable discharge above a confluence (applies only to Tigris above point F)
-	id	Final computed discharge in the Tigris above a confluence or a control point (other than Eski Mosul)
-	idn	Net "id" (minus torrential component)
-	it	Natural torrential inflow to a reservoir or to the Tigris at the point R or to a tributary inflow (+ or -) assumed concentrated at J
J	j	Confluence of Adhaim with Tigris
K	k	Kut Barrage
K_1		A constant to apply to total reservoir content to adjust for dead storage
K_2		A constant to apply to combined contents of Dokan plus Derbend-i-Khan to adjust for dead storage
K_3		June first specified quotient in Flow Diagram 1
K_4		A value of e
K_5		A value of e

Meaning of Symbols Used in Computer Studies (continued)

K_6		November first specified quotient in Flow Diagram 1
K_7		A specified constant to which $\frac{N_c}{D_c}$ is compared
L	l	Head of Zab-Adhaim Linkage Canal and tail of Makmour Canal (The small letter is underlined in typescript to distinguish it from unity.)
M	m	Eski Mosul Reservoir
-	m	Eski Mosul phasing coefficient (not subscript)
N	n	Derbend-i-Khan Reservoir
O	-	Distribution coefficient (It is always defined by three subscript letters, the first denoting the supplying reservoir, the last two denoting the reach supplied. The subscript actually used in the calculations are "mfr" and "bfr." All subscripts with the same two terminal letters must add up to unity.)
-	p	Percentage of total irrigation demands to be supplied
-	q	Discharge at the tail of a linkage canal
R	r	Confluence of Lesser Zab with Tigris (Fatha Reservoir)
S	s	Samarra Barrage
$S_{(c)}$	-	Total contents of Eski Mosul, Bekhme, Dokan, Fatha, Derbend-i-Khan, and Tharthar Reservoirs (For Tharthar $W_c - W_{cc}$ must be positive.)
$S_{(cc)}$	-	Critical value of $S_{(c)}$
-	s	Potential shortage at Fatha, may be followed by a subscript digit, but is never associated with another subscript letter when it has this meaning (If it follows the letter "d" or "c" in a subscript it indicates that the values are in a subroutine.)

Meaning of Symbols Used in Computer Studies (continued)

-	t	Discharge in Tigris below a confluence (The subscript "d" is used when there is a control work on the river, as at Fatha, Samarra, and Kut.)
-	u	Discharge at the head of a distributary whether a linkage canal or the Wadi Tharthar feeder
V		Minimum allowable value of X_k to satisfy navigation requirements below Kut
W	w	Wadi Tharthar Reservoir
X	-	Net irrigation requirement (The point or reach in question is defined by one or two subscript letters.)
X'	-	Unsatisfied irrigation requirement after the net requirement has been partially supplied (It is defined in the same way as "X," but may be applicable to the series of reaches between its subscripts.)
-	x	Percentage of normal irrigation demands to be satisfied from June through October
Y	y	Confluence of Diyala and Tigris
-	y	Percentage of normal irrigation demands to be satisfied from November through April
Z	z	Head of Makmour Canal

Misc: The subscripts "c" and "d" may be followed by the additional letters "max" and "min"; these signify the maximum and minimum values which are allowable. Digits following a subscript "c" or "d" indicate successive trials for the values of the quantity concerned.

Capital letters are never subscript, but small letters always are unless otherwise stated. A capital with subscript "c" may carry a star (*), and it then refers

Meaning of Symbols Used in Computer Studies (continued)

to the end of the month; otherwise the subscript "c" refers to the contents of the reservoir at the beginning of the month. Unless it is included in the above list, a two-letter subscript defines a reach of river.

The unit of time is one month, and quantities of water are measured in cumec-months or cumens. Three hundred and eighty (380) cumens equal about one milliard (10^9) cubic meters.

Flow Diagram 1, Overall Program

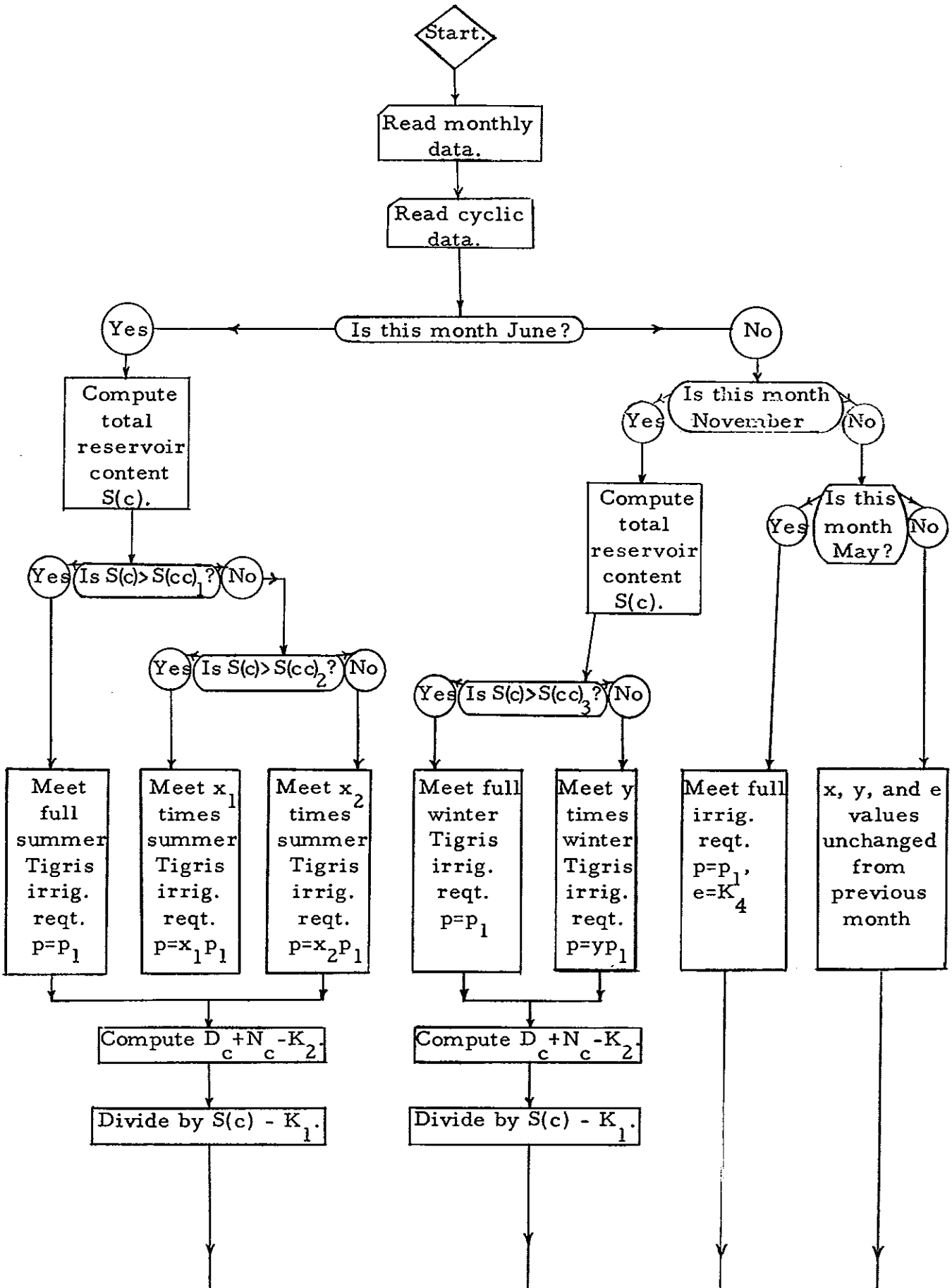

Flow Diagram 1, Overall Program (continued)

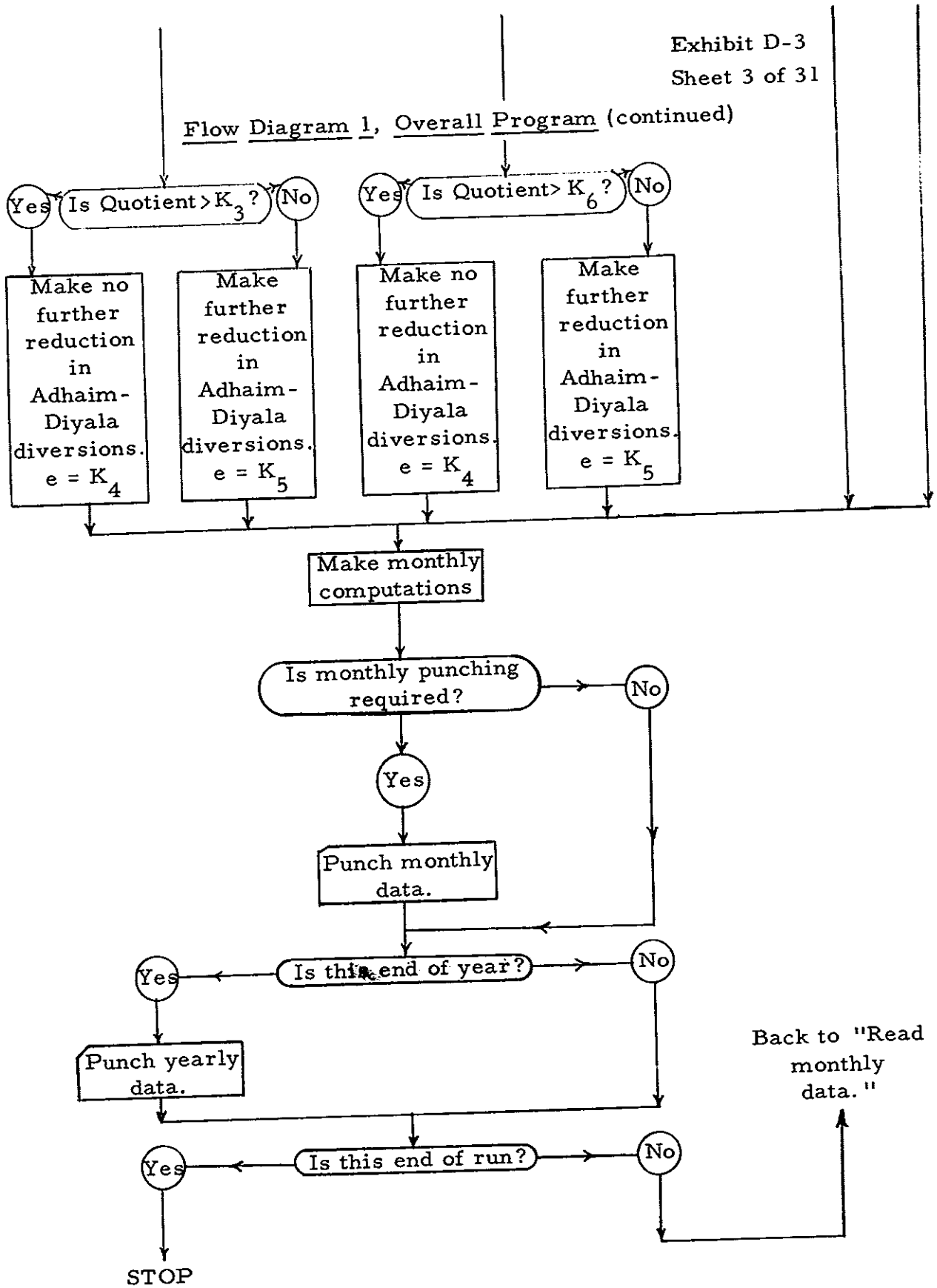

Flow Diagram 2, Monthly Calculations

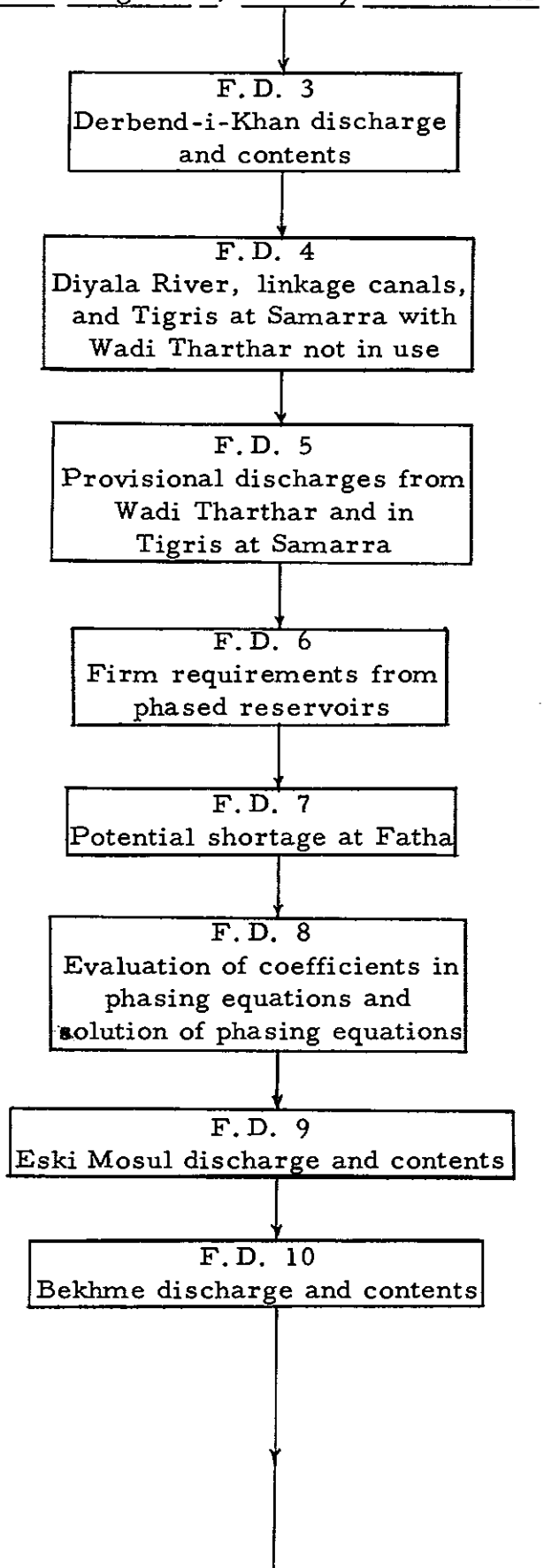

Flow Diagram 2, Monthly Calculations (continued)

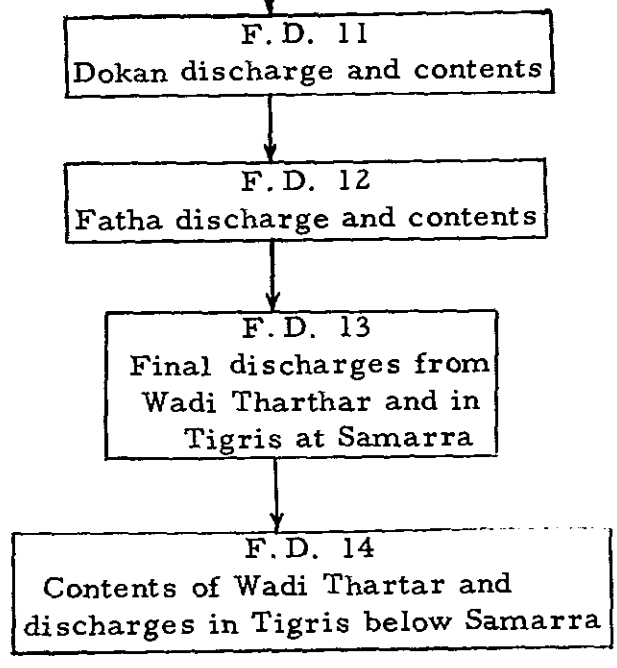

Flow Diagram 3, Derbend-i-Khan Discharge and Contents (continued)

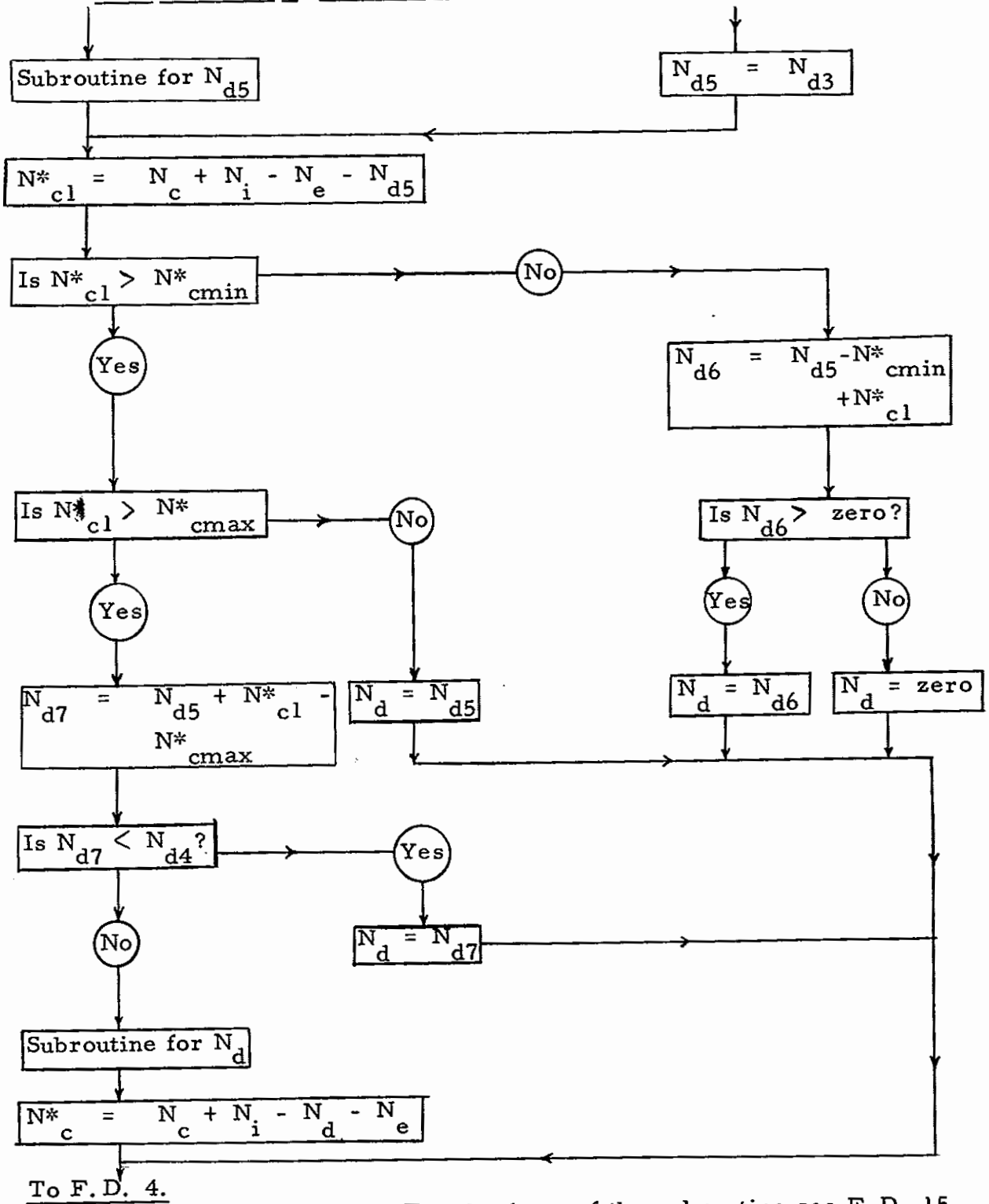

To F.D. 4.

Note: For the form of the subroutine see F.D. 15.

Flow Diagram 4, Diyala River, Linkage Canals, and Tigris at Samarra with Wadi Tharthar not in Use

From F.D. 3.

$G_d = N_d + G_{it} - pe\,(X_{ng} + X_g) + G_q$

$A_u = pe\,X_{ag} + G_q$

$A_q = A_u + A_{dc}$

$A_d = A_{it} + A_q - A_u$

$L_u = A_q + pe\,X_{1a}$

$L_q =$ Specified

$Z_u = L_q + p\,X_{z1}$

$V_1 =$ Minimum value of X_k to satisfy navigation (specified)

$V_2 = p\,X_k$

$V =$ Greater (V_1, V_2)

Flow Diagram 4, Diyala River, Linkage Canals, and Tigris at Samarra with Wadi Tharthar not in Use (continued)

Is Wadi Tharthar to be used for irrigation storage? → Yes → To F.D. 5.

No

$$S_{d1} = p(X_{sj} + X_{jy} + X_{yk}) + V - J_{it} - A_{dc} - G_{dc}$$

$$S_{d2} = S_{d1} - \text{greater}\left[(N_d - N_{d1}), \text{zero}\right]$$

In the case that $(N_d - N_{d1})$ is less than zero, there is a "Warning Stop."

To F.D. 6

Flow Diagram 5, Provisional Discharges from Wadi Tharthar and in Tigris at Samarra

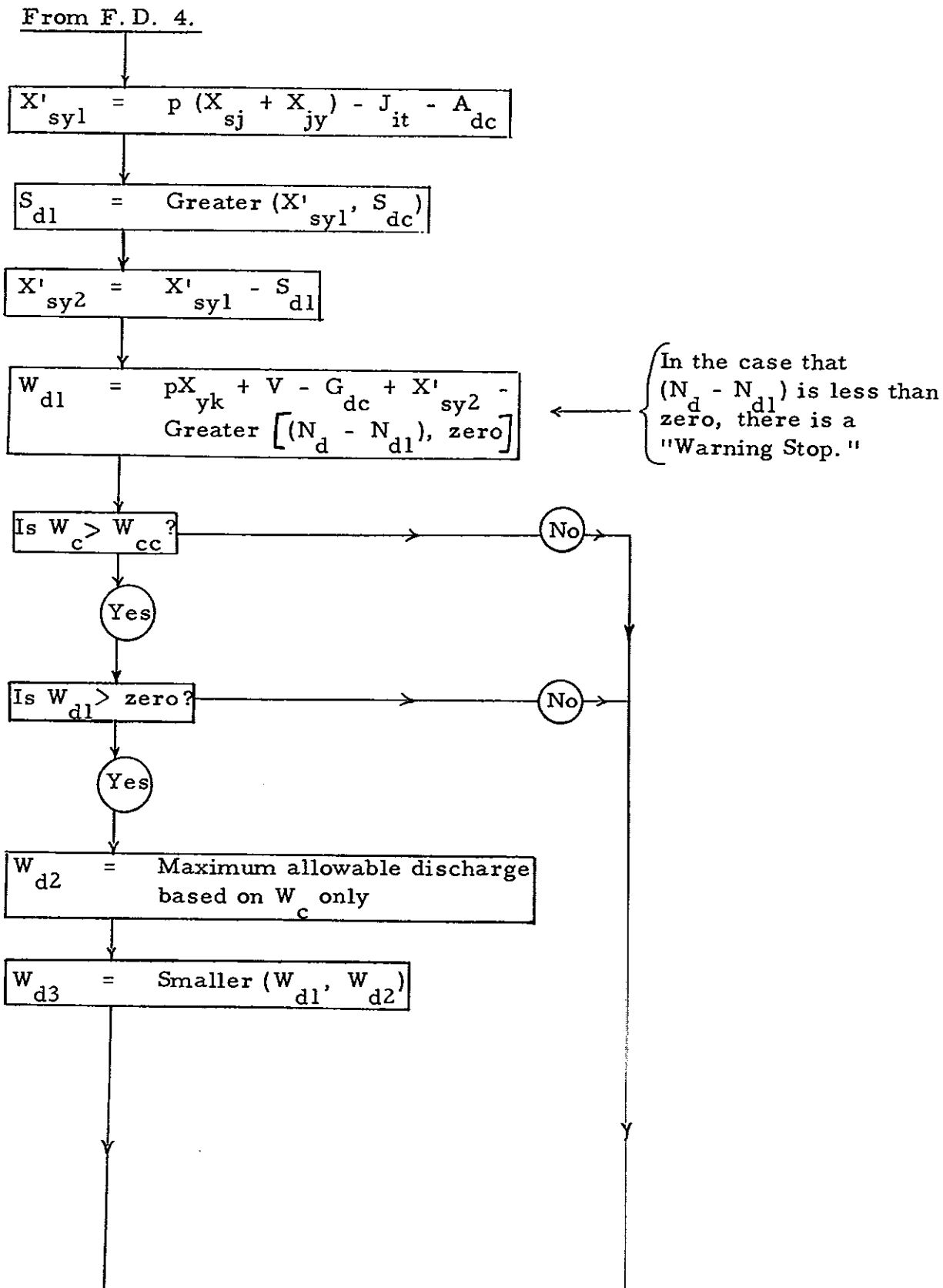

Flow Diagram 5, Provisional Discharge from Wadi Tharthar and in Tigris at Samarra (continued)

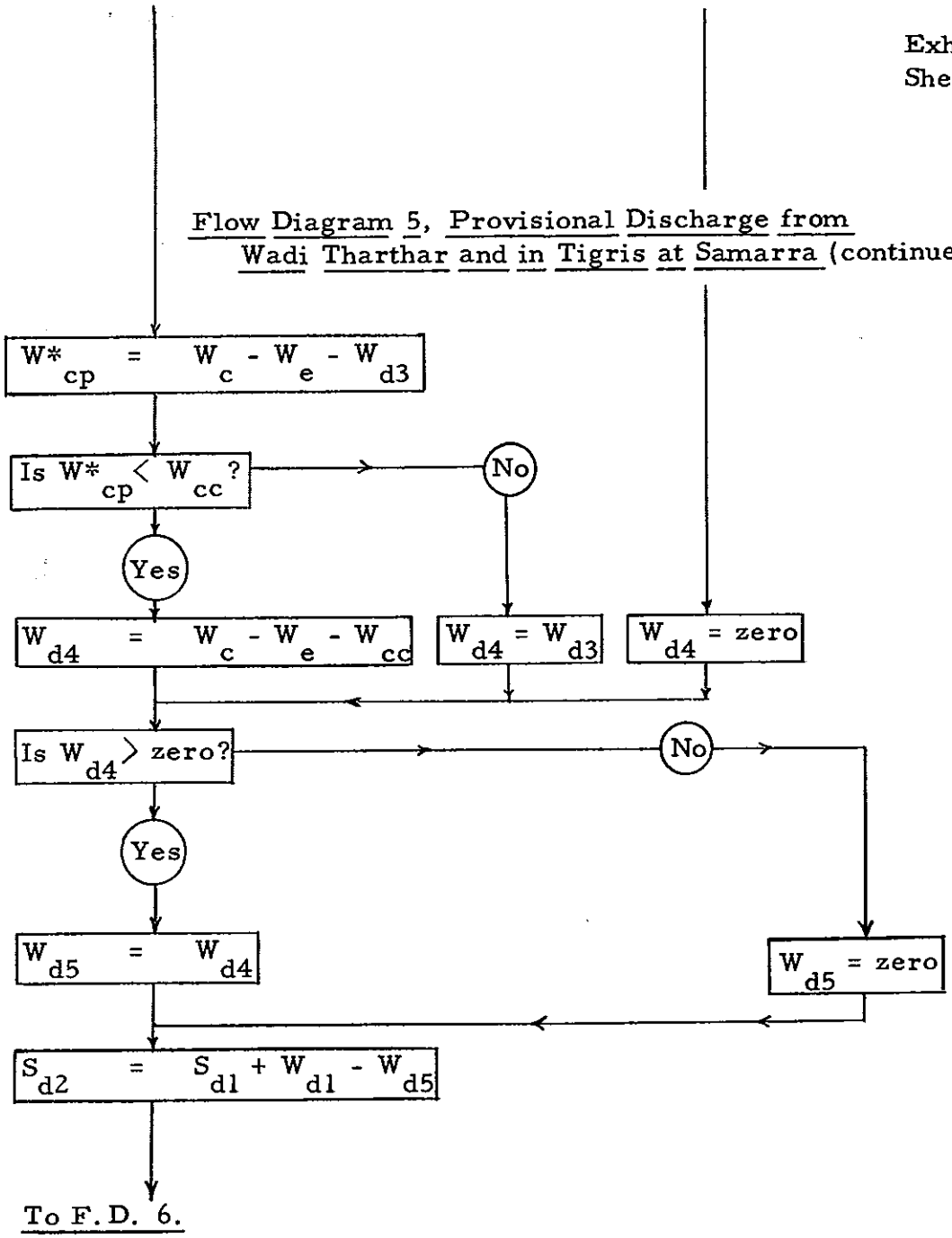

Flow Diagram 6, Firm Requirements from Phased Reservoirs

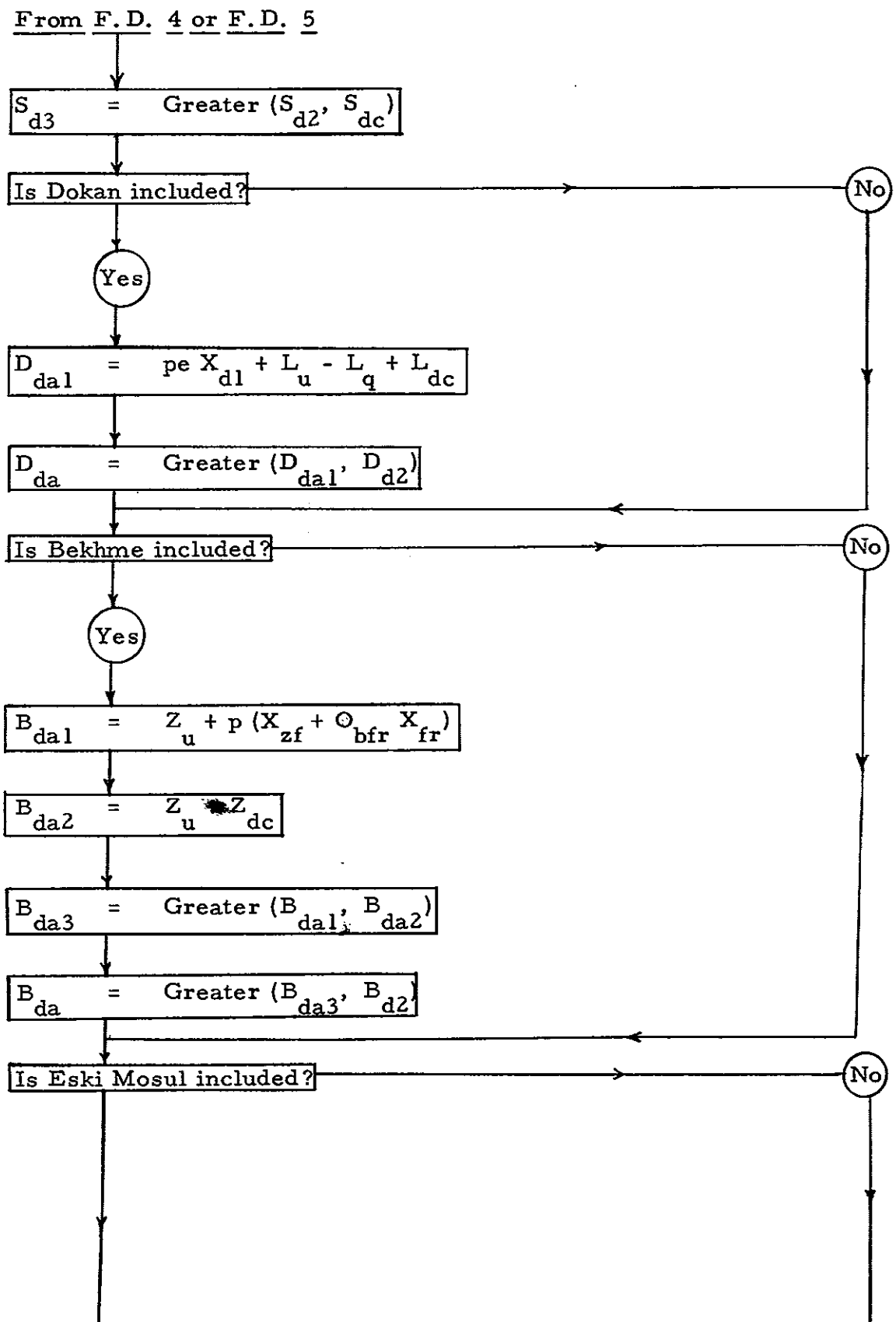

Flow Diagram 6, Firm Requirements from Phased Reservoirs

(continued)

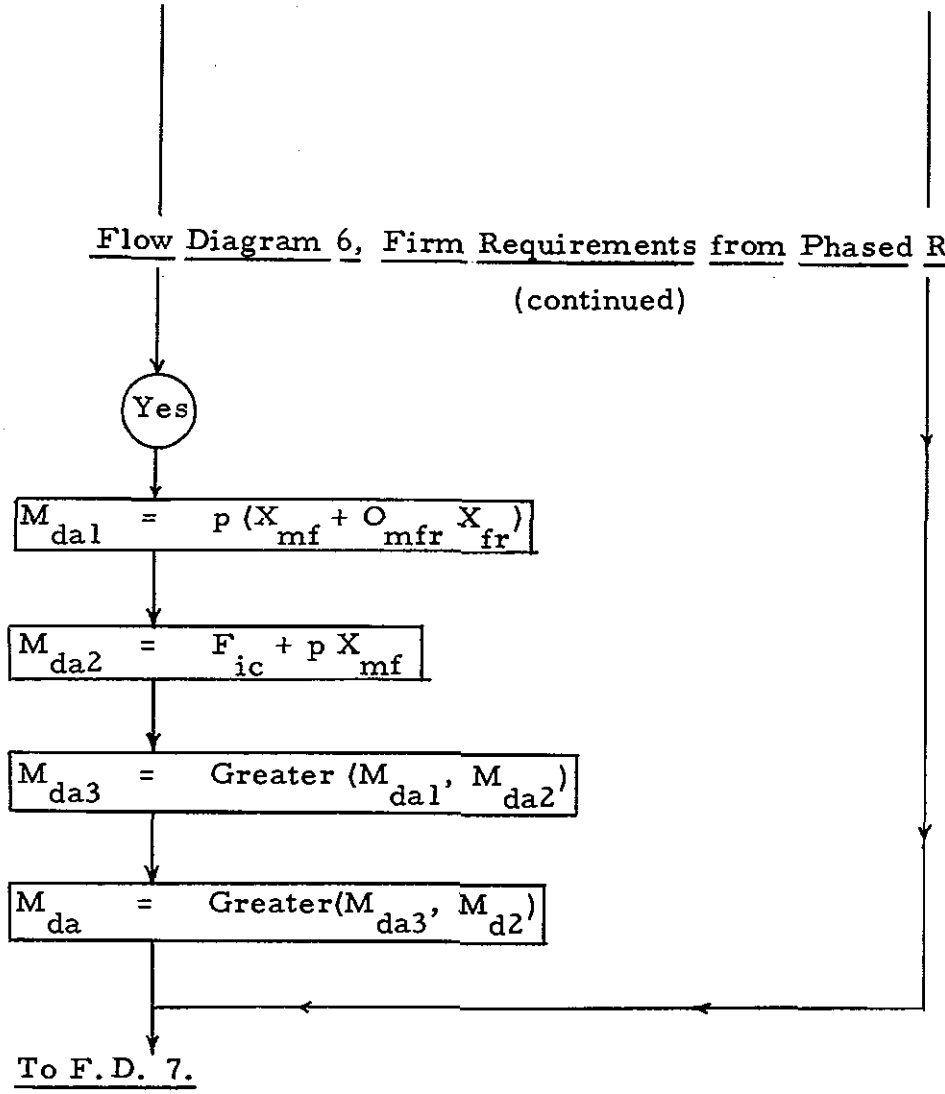

Note:

In this flow diagram, D_{d2}, B_{d2}, and M_{d2} are minimum permissible discharges.

Flow Diagram 7, Potential Shortage at Fatha

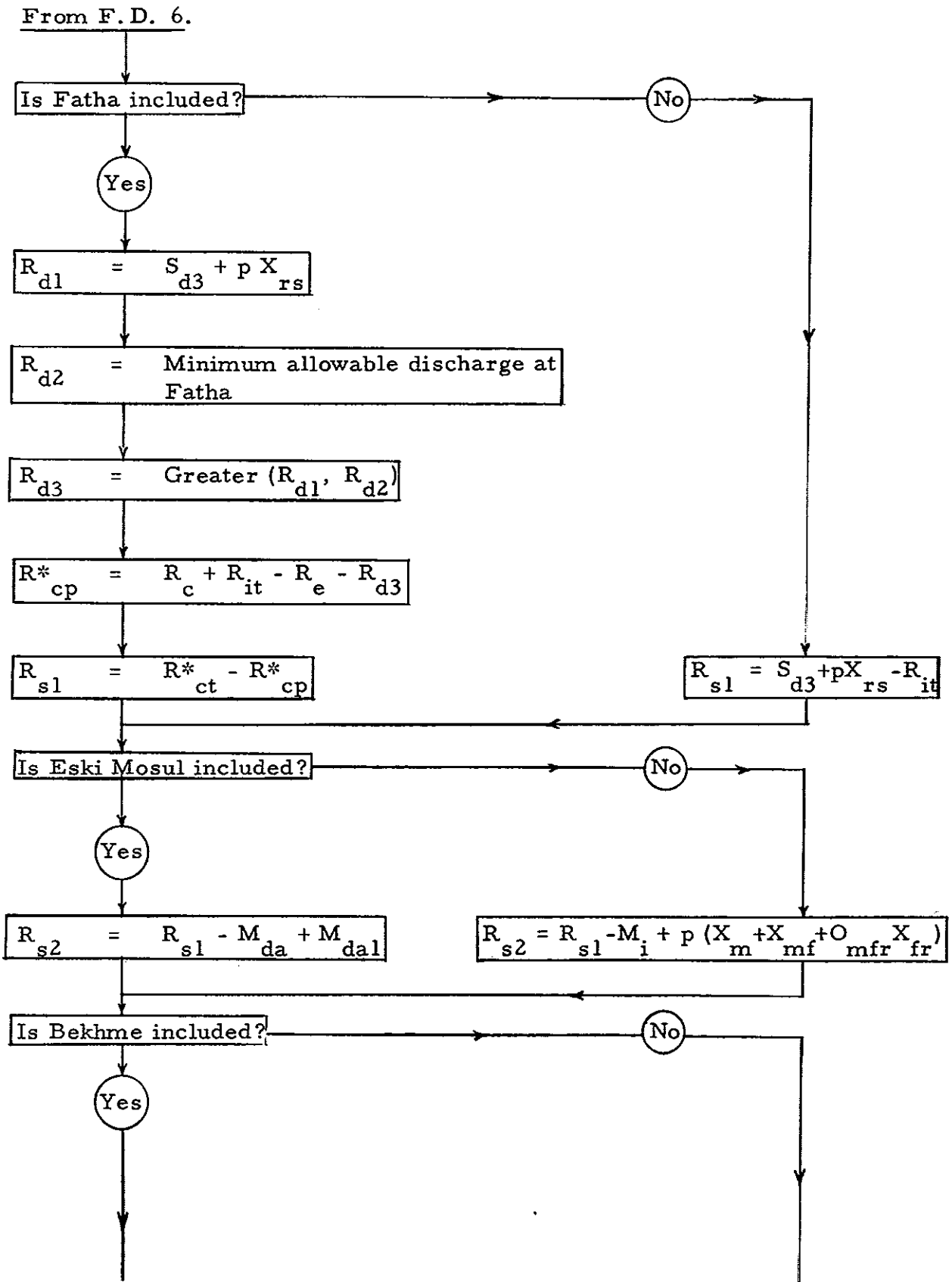

Flow Diagram 7, Potential Shortage at Fatha (continued)

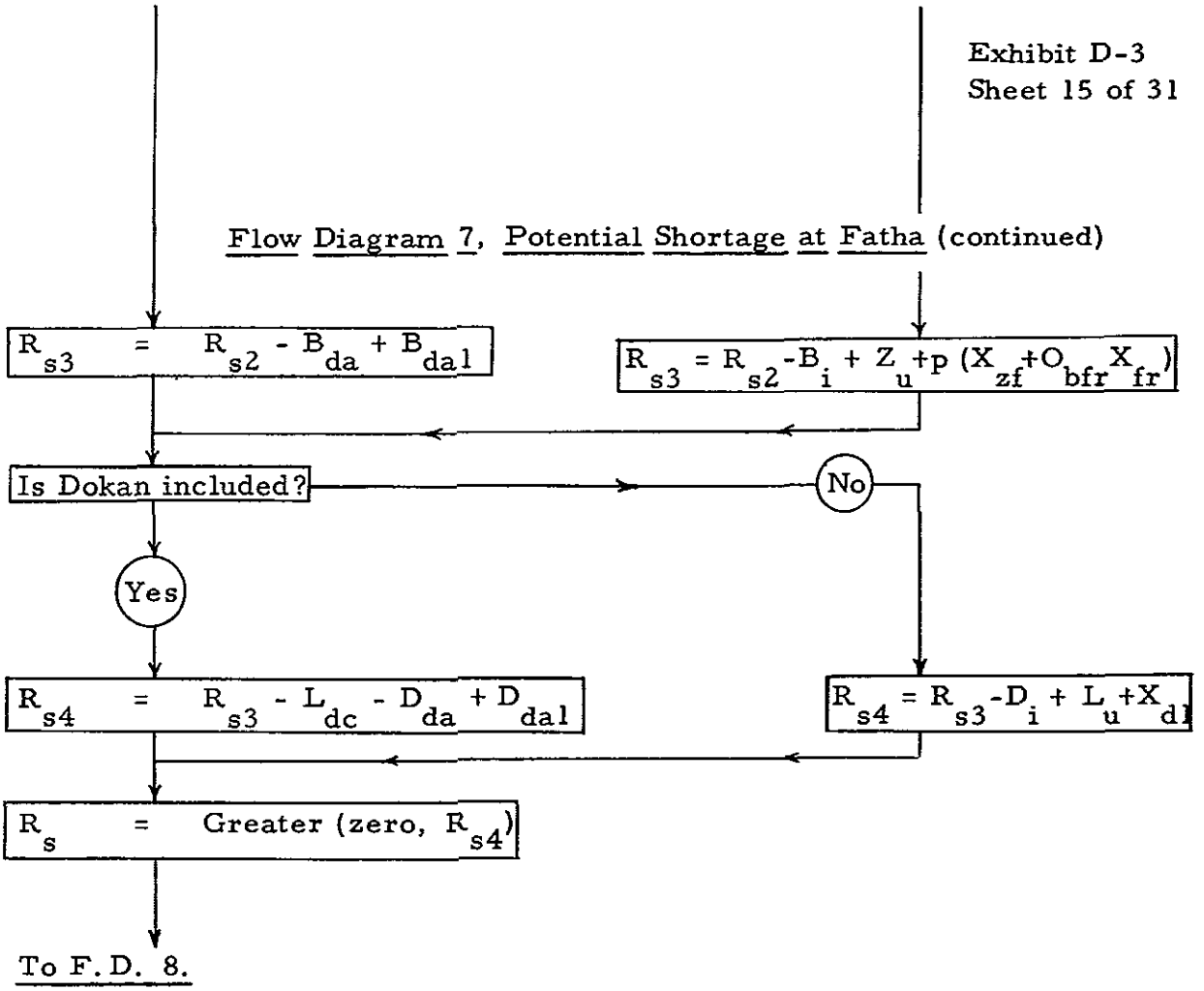

Flow Diagram 8, Evaluation of Coefficients in Phasing Equations and Solution of Phasing Equations

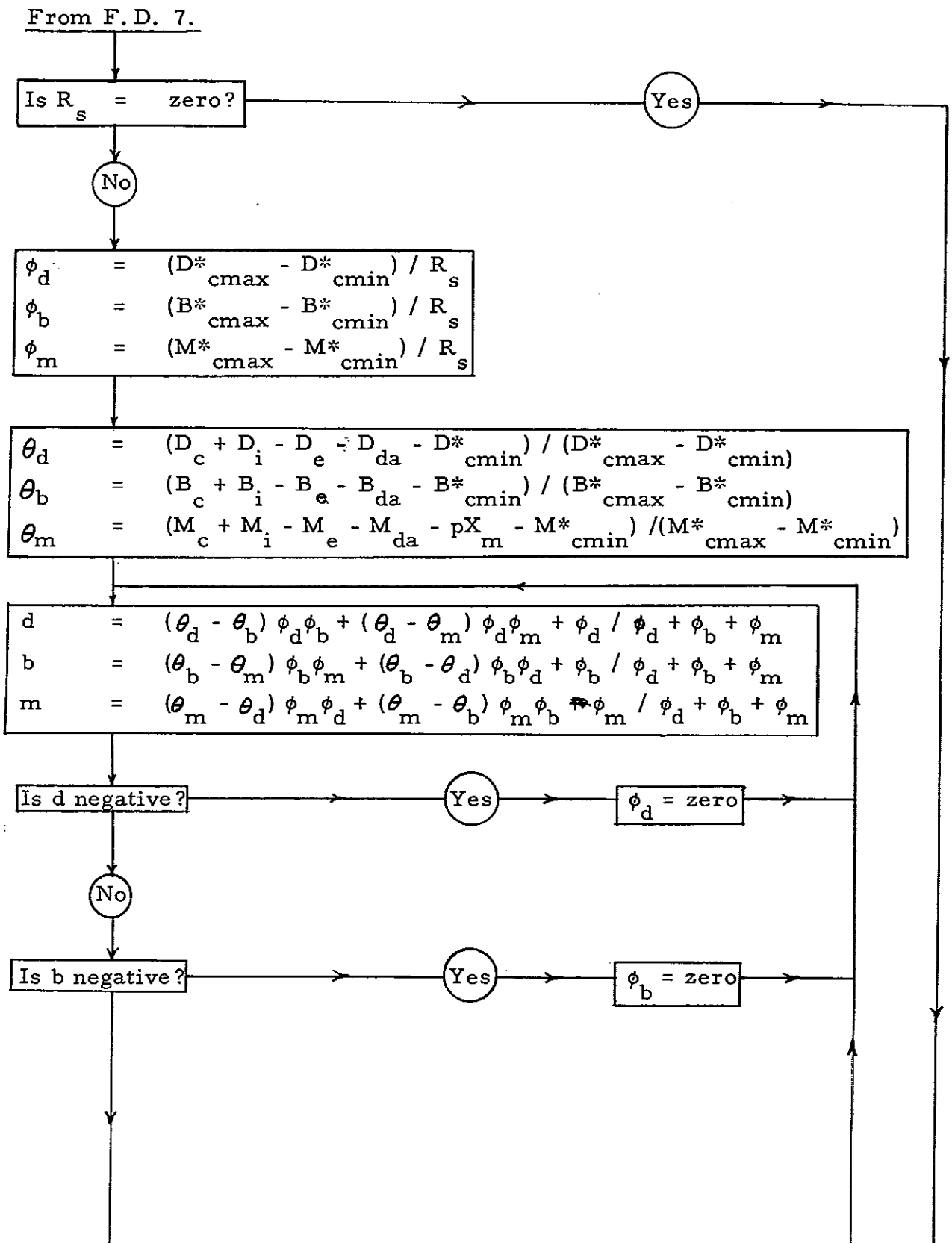

45

Flow Diagram 8, Evaluation of Coefficients in Phasing Equations and Solution of Phasing Equations (continued)

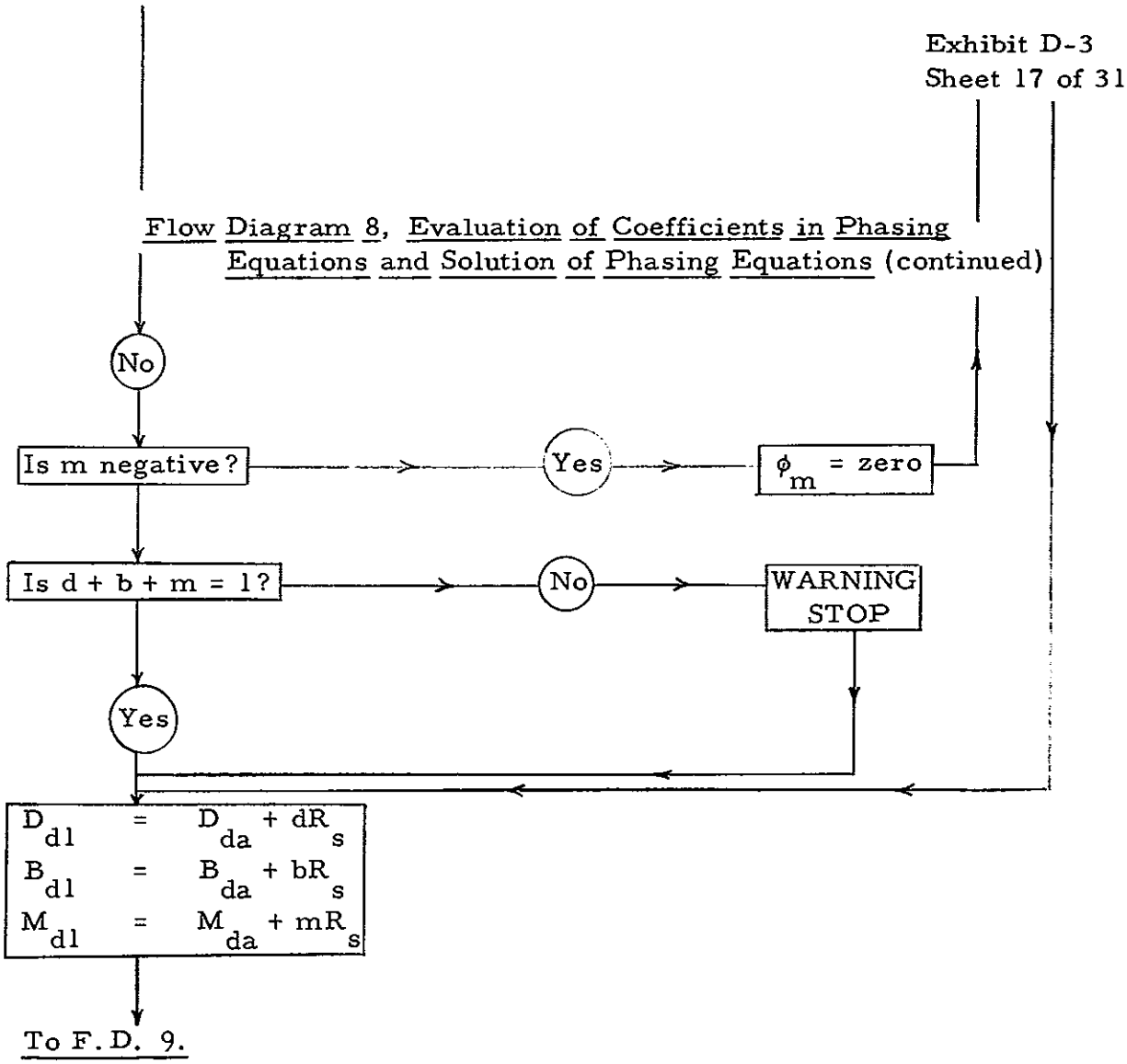

Flow Diagram 9, Eski Mosul Discharge and Contents

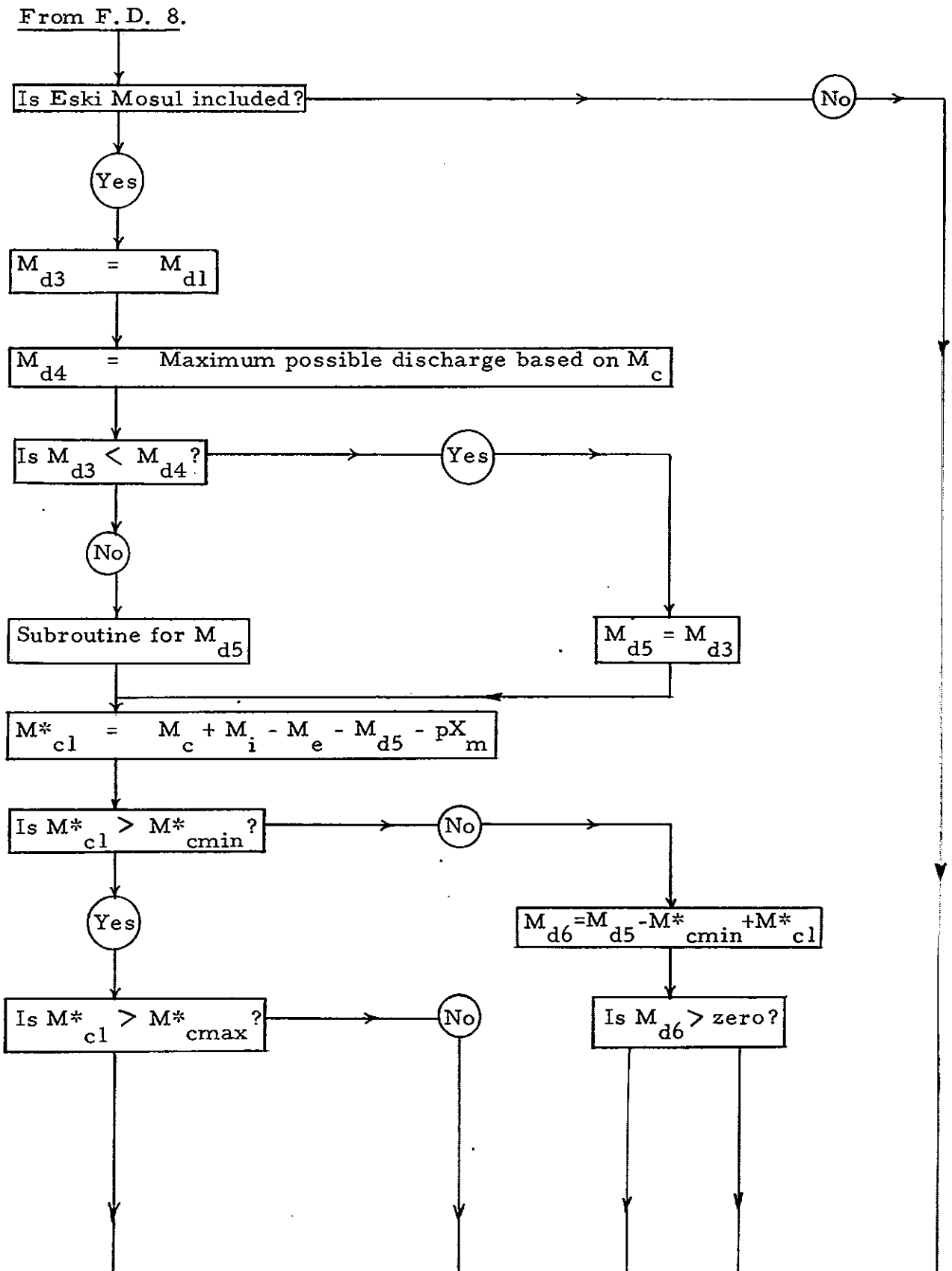

Flow Diagram 9, Eski Mosul Discharge and Contents (continued)

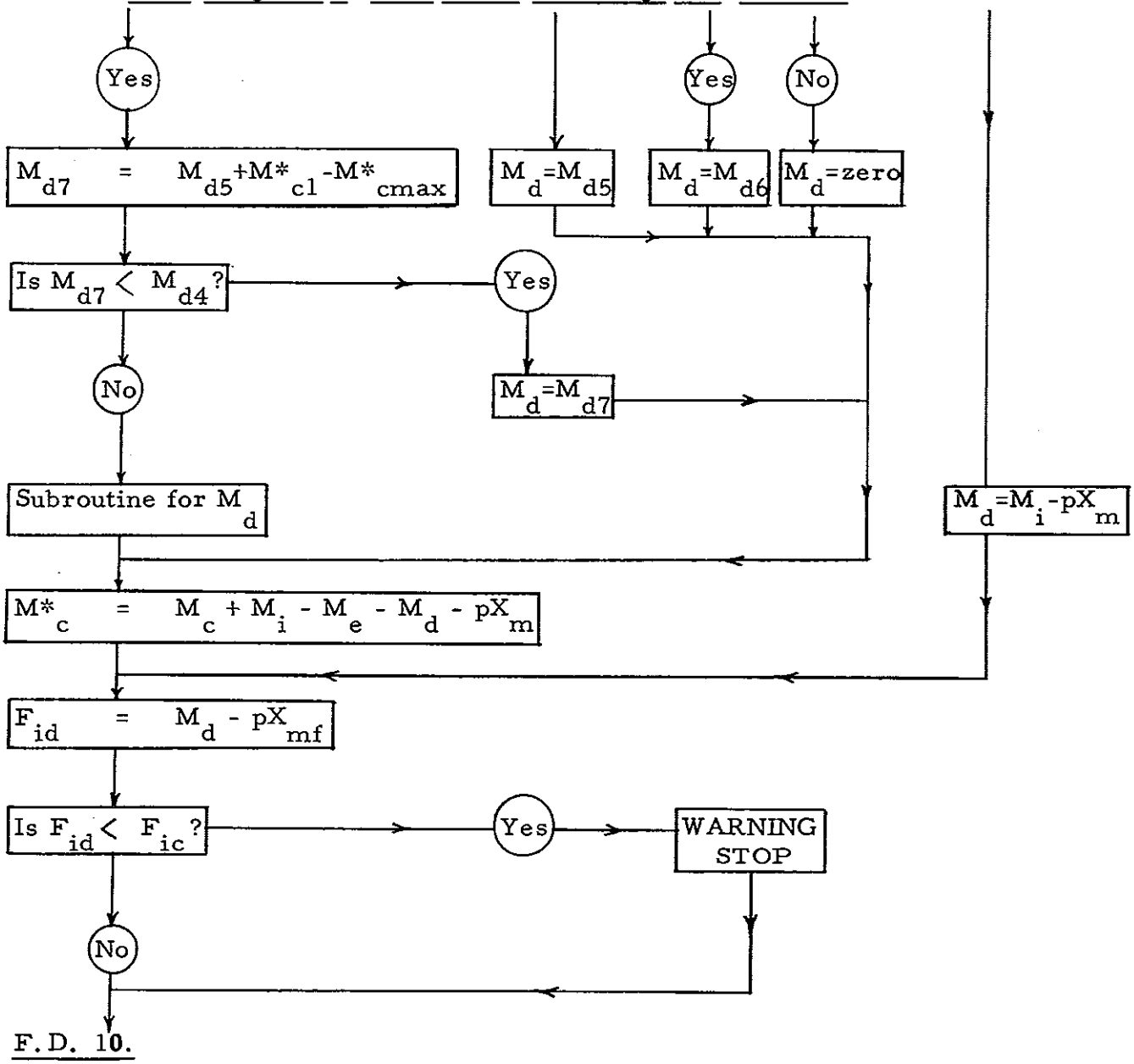

Note:

For the form of the subroutine see F.D. 15.

Flow Diagram 10, Bekhme Discharge and Contents

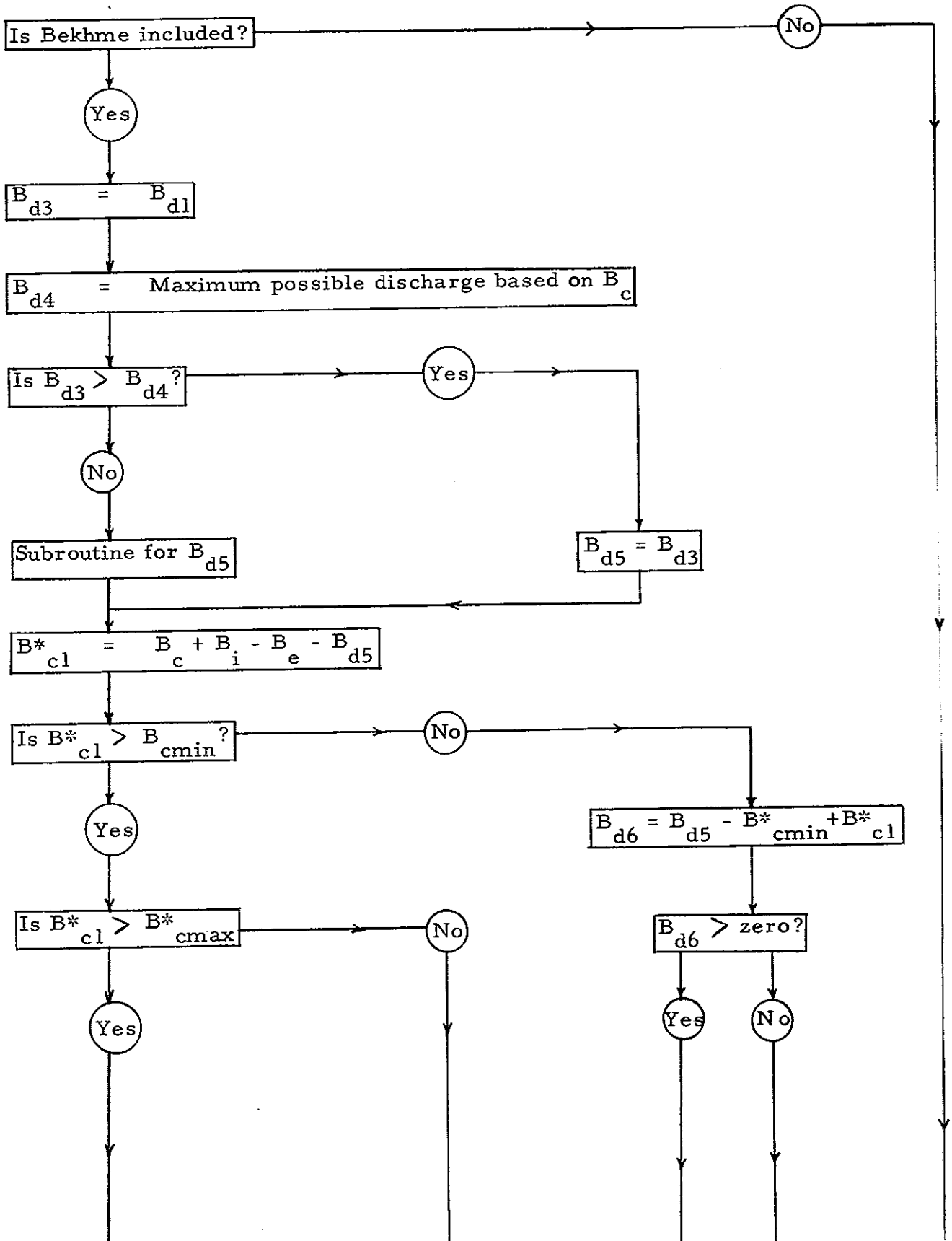

Flow Diagram 10, Bekhme Discharge and Contents (continued)

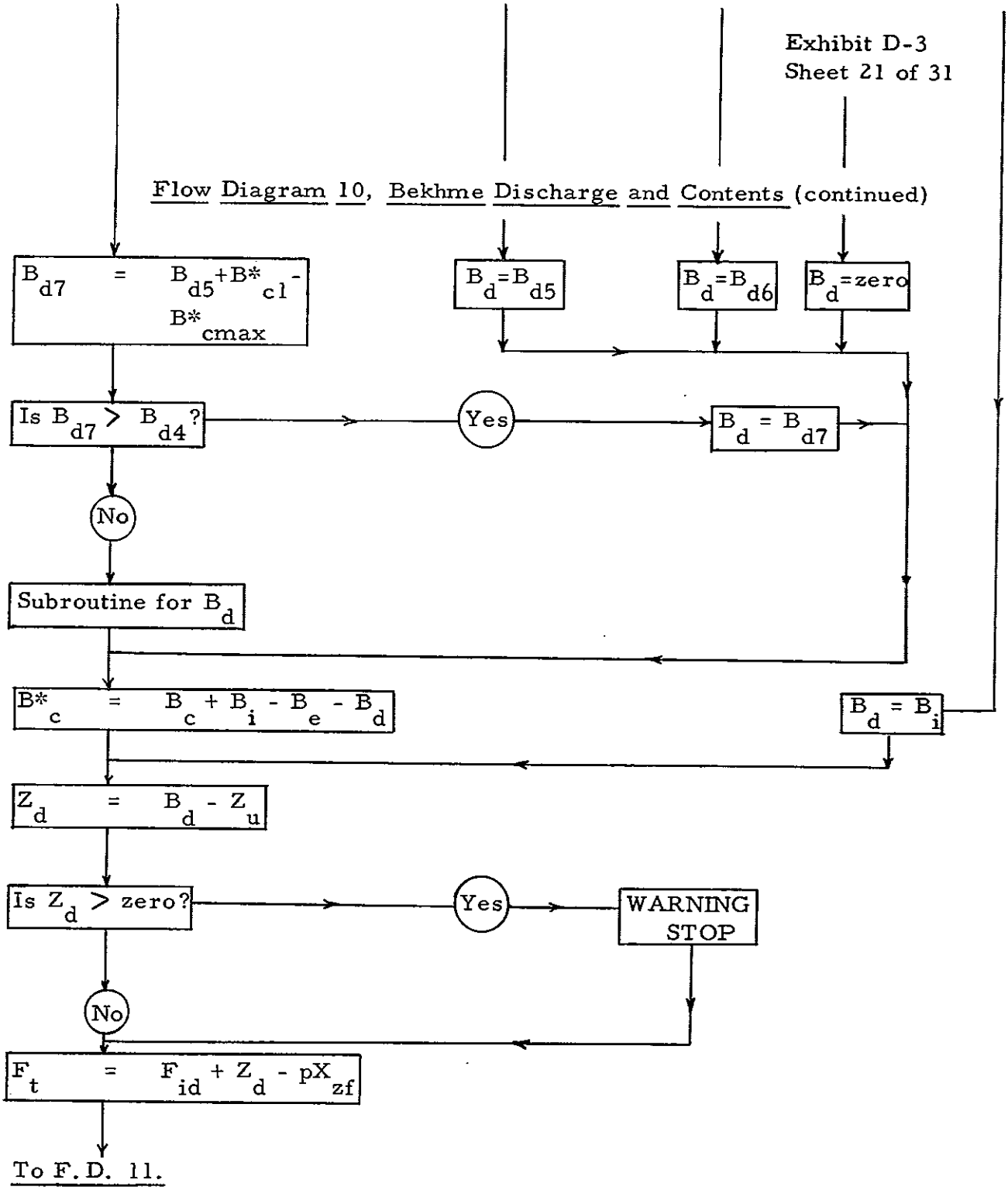

Note:

For the form of the subroutine see F.D. 15.

Flow Diagram 11, Dokan Discharge and Contents

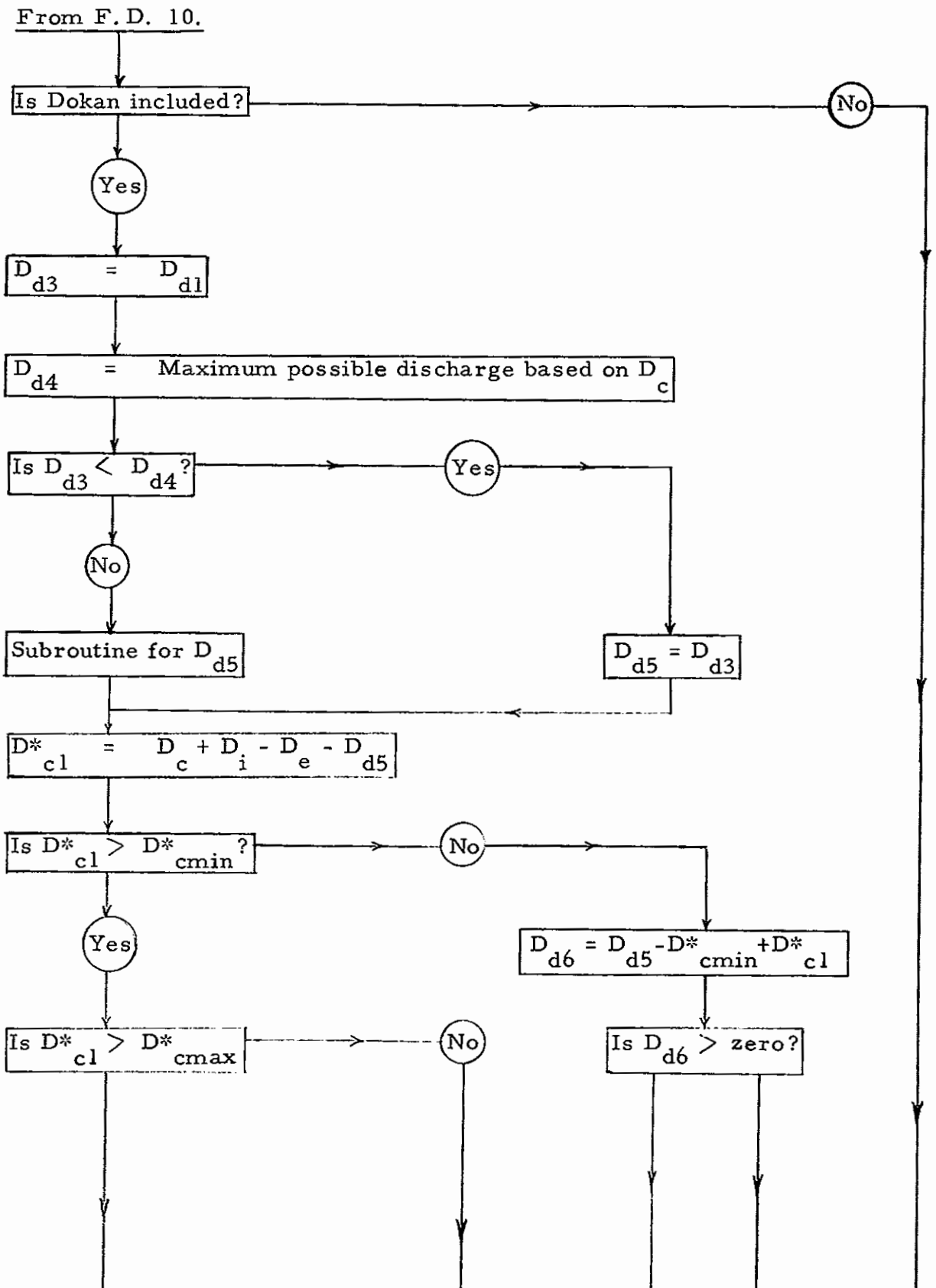

Flow Diagram 11, Dokan Discharge and Contents (continued)

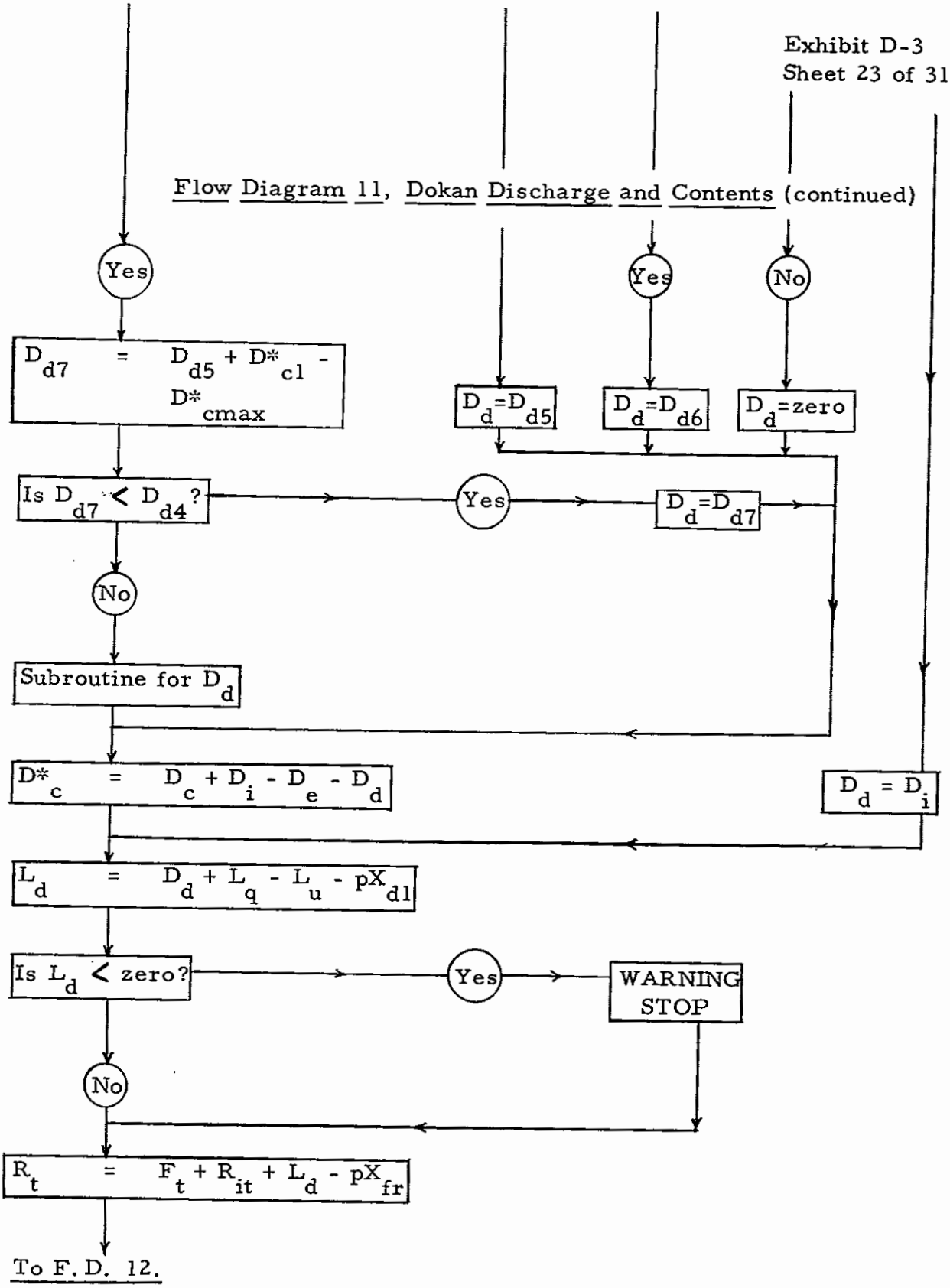

To F.D. 12.

Note:

For the form of the subroutine see F.D. 15.

Flow Diagram 12, Fatha Discharge and Contents

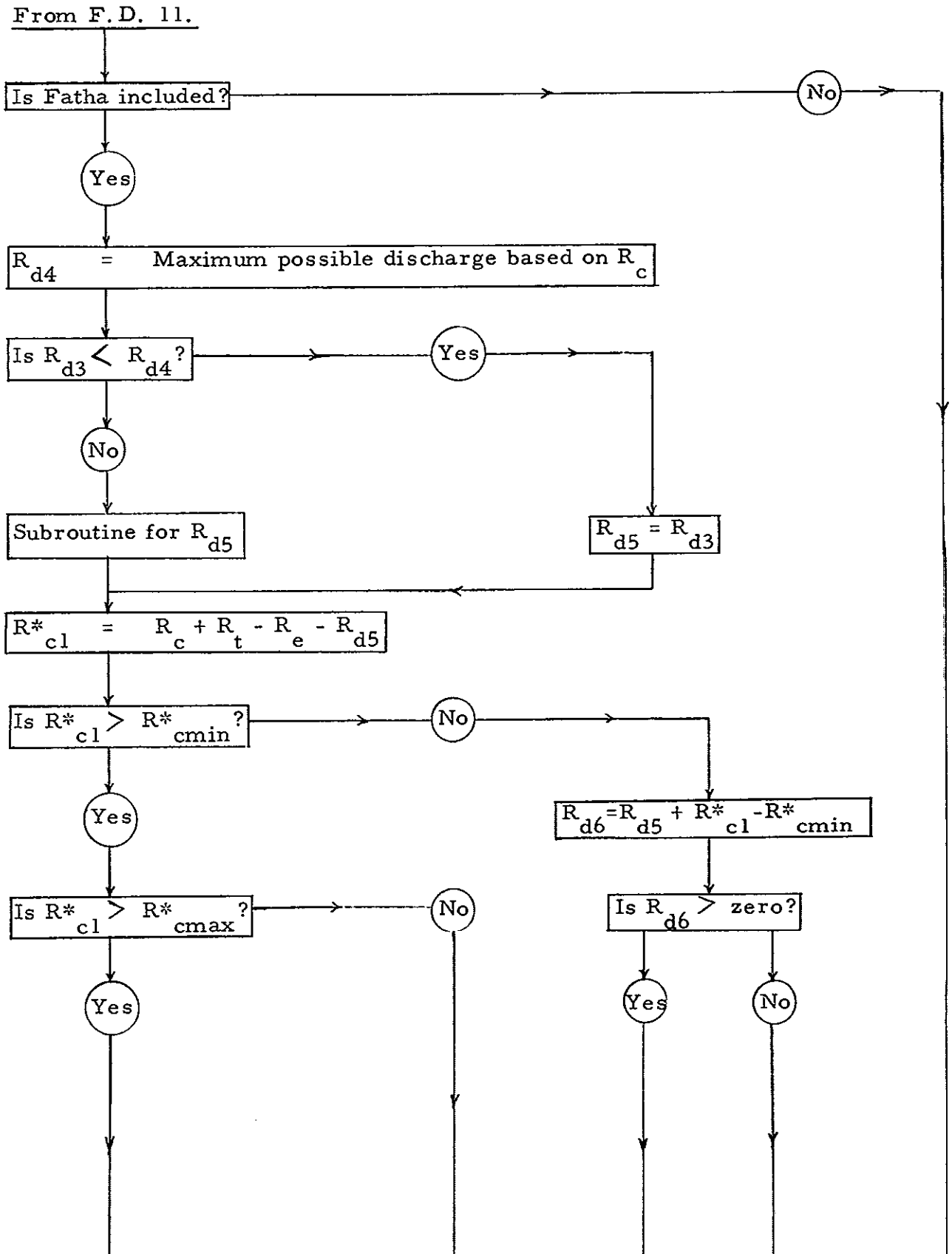

Flow Diagram 12, Fatha Discharge and Contents (continued)

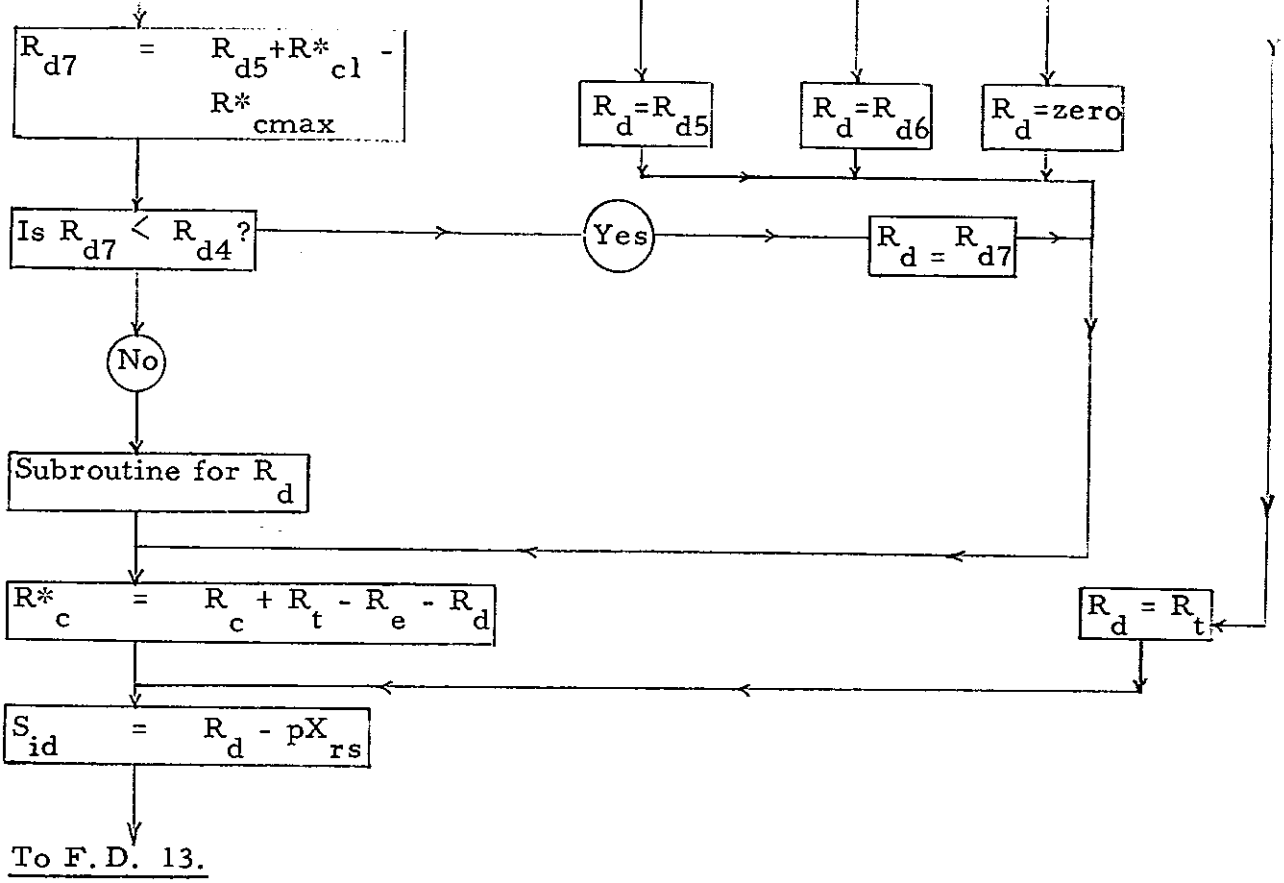

Note:

For the form of the subroutine, see F.D. 15.

Flow Diagram 13, Final Discharge from Wadi Tharthar and in Tigris at Samarra

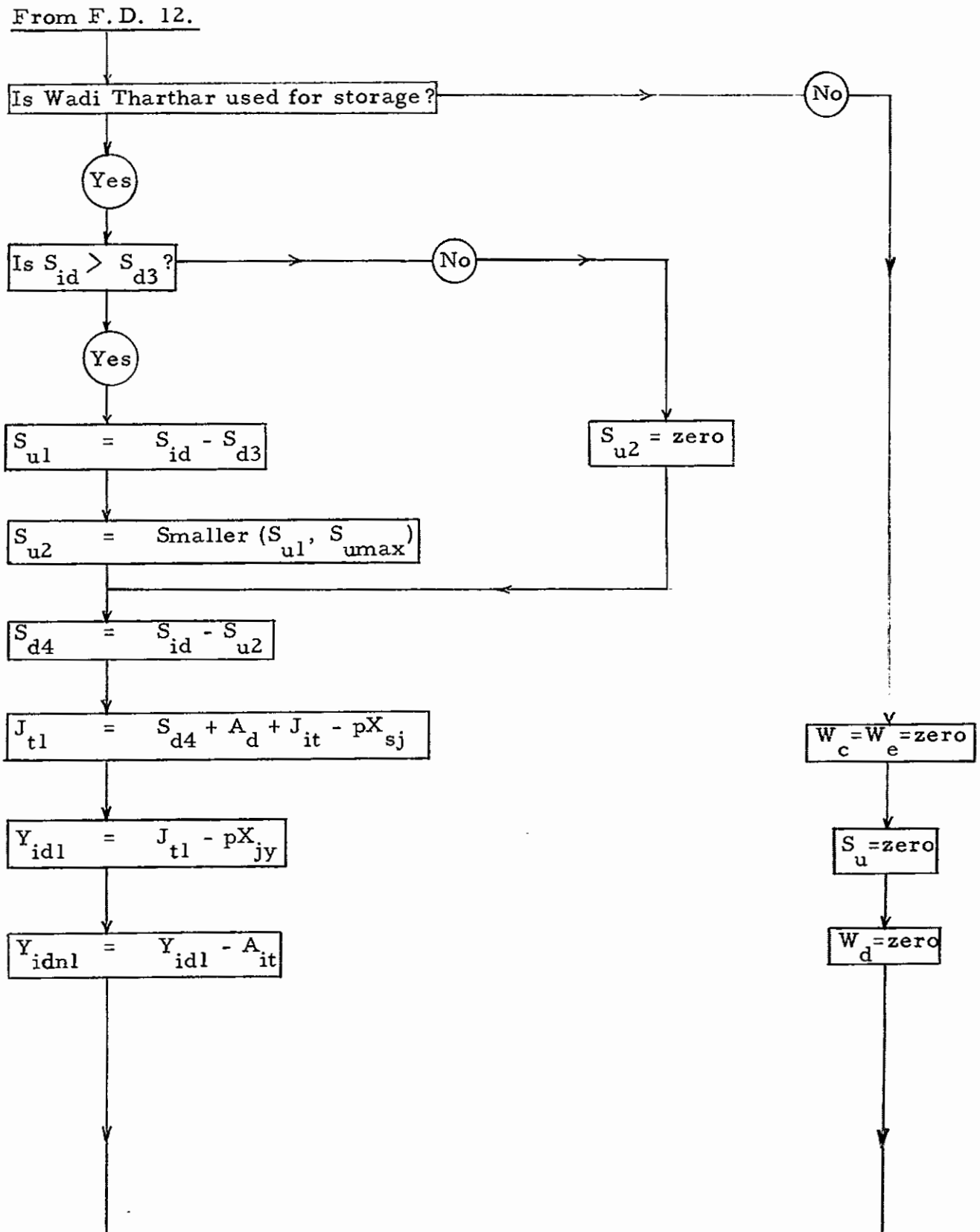

Flow Diagram 13, Final Discharges from Wadi Tharthar and in Tigris at Samarra (continued)

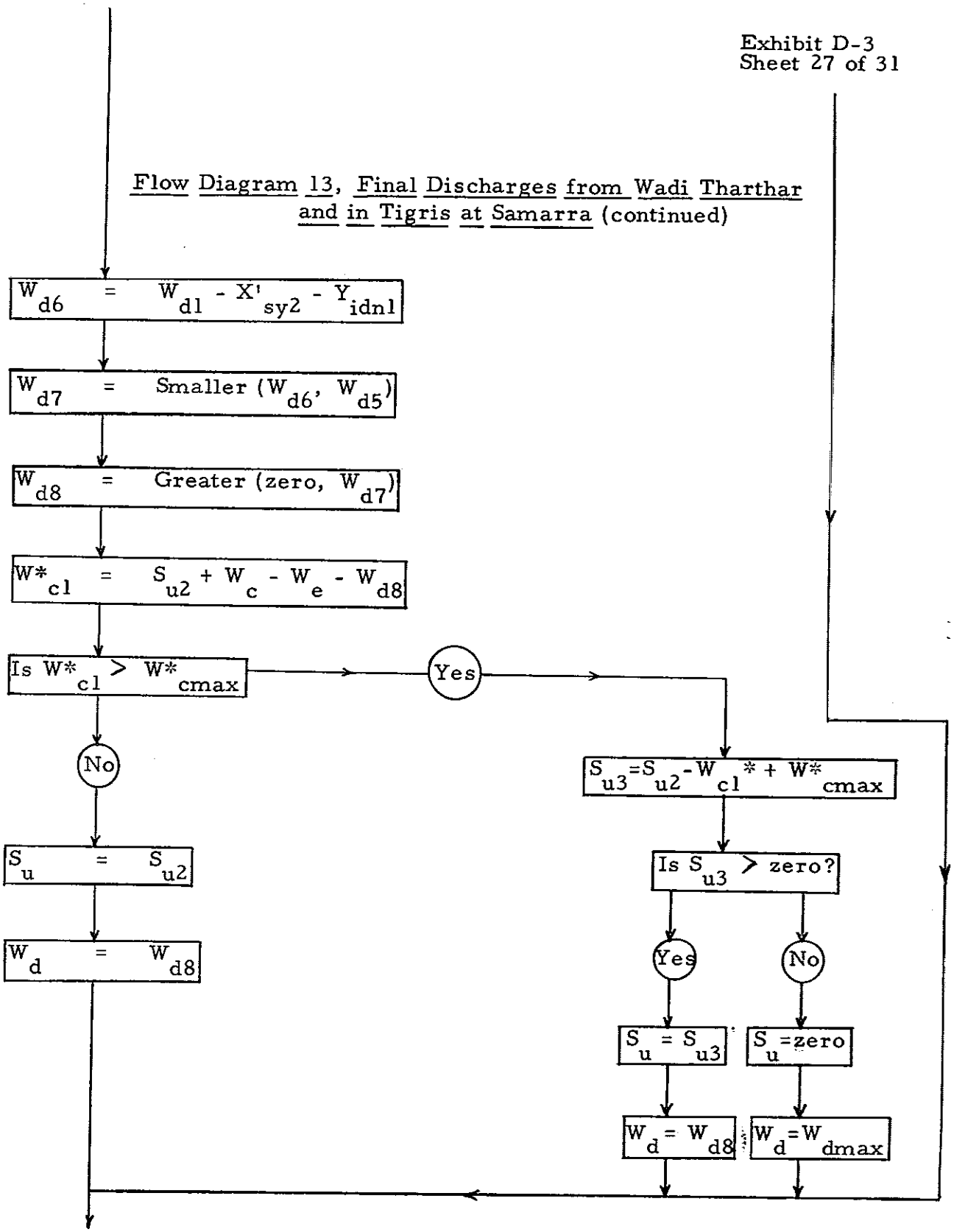

To F.D. 14.

Flow Diagram 14, Contents of Wadi Tharthar and Discharges in Tigris below Samarra

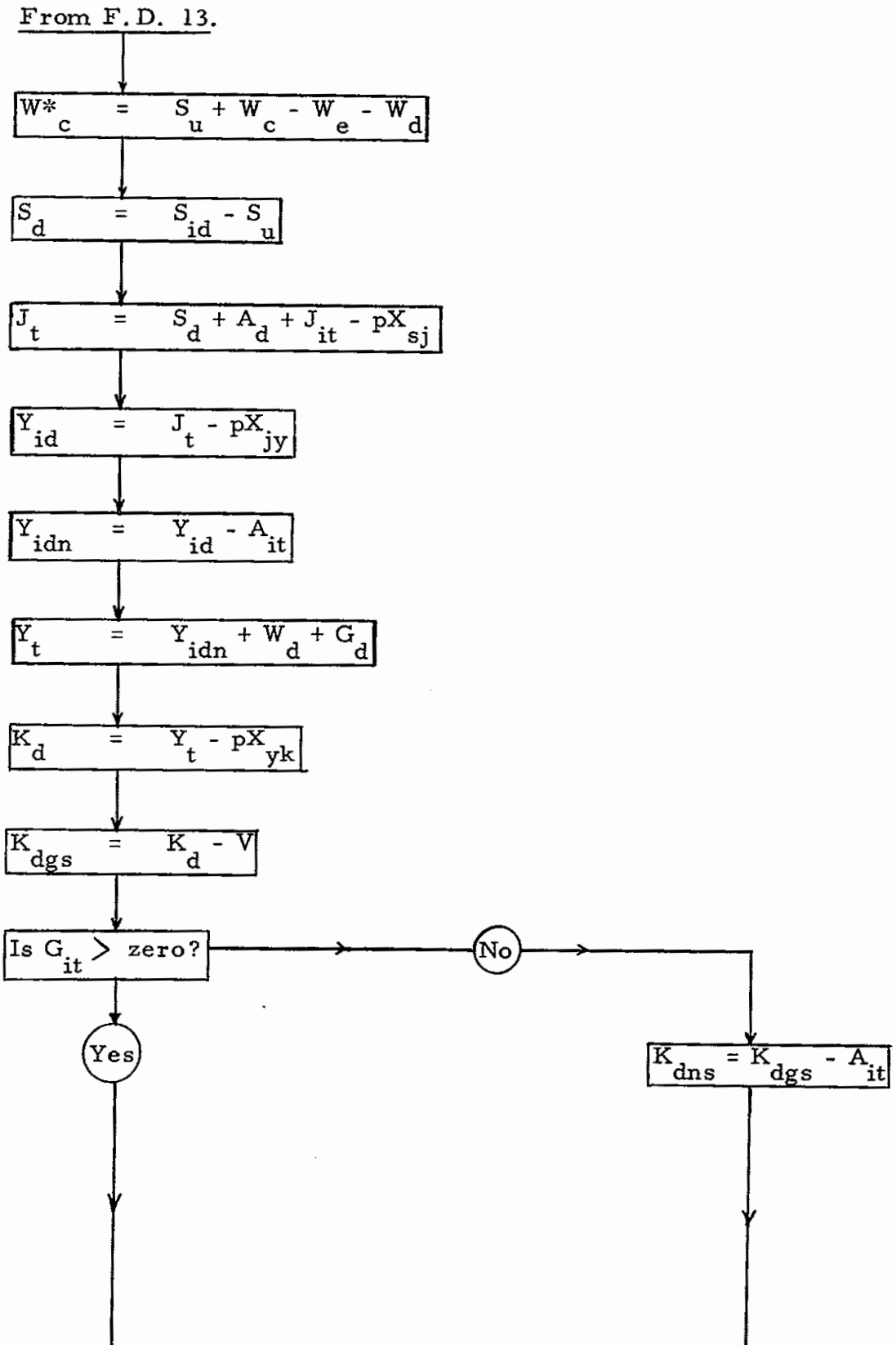

Flow Diagram 14, Contents of Wadi Tharthar and Discharges in Tigris below Samarra (continued)

$$K_{dns} = K_{dgs} - G_{it} - A_{it}$$

End of computation for month

Return to F. D. 1.

Flow Diagram 15, Typical Subroutine for Maximum Mean Discharge Possible from Reservoir

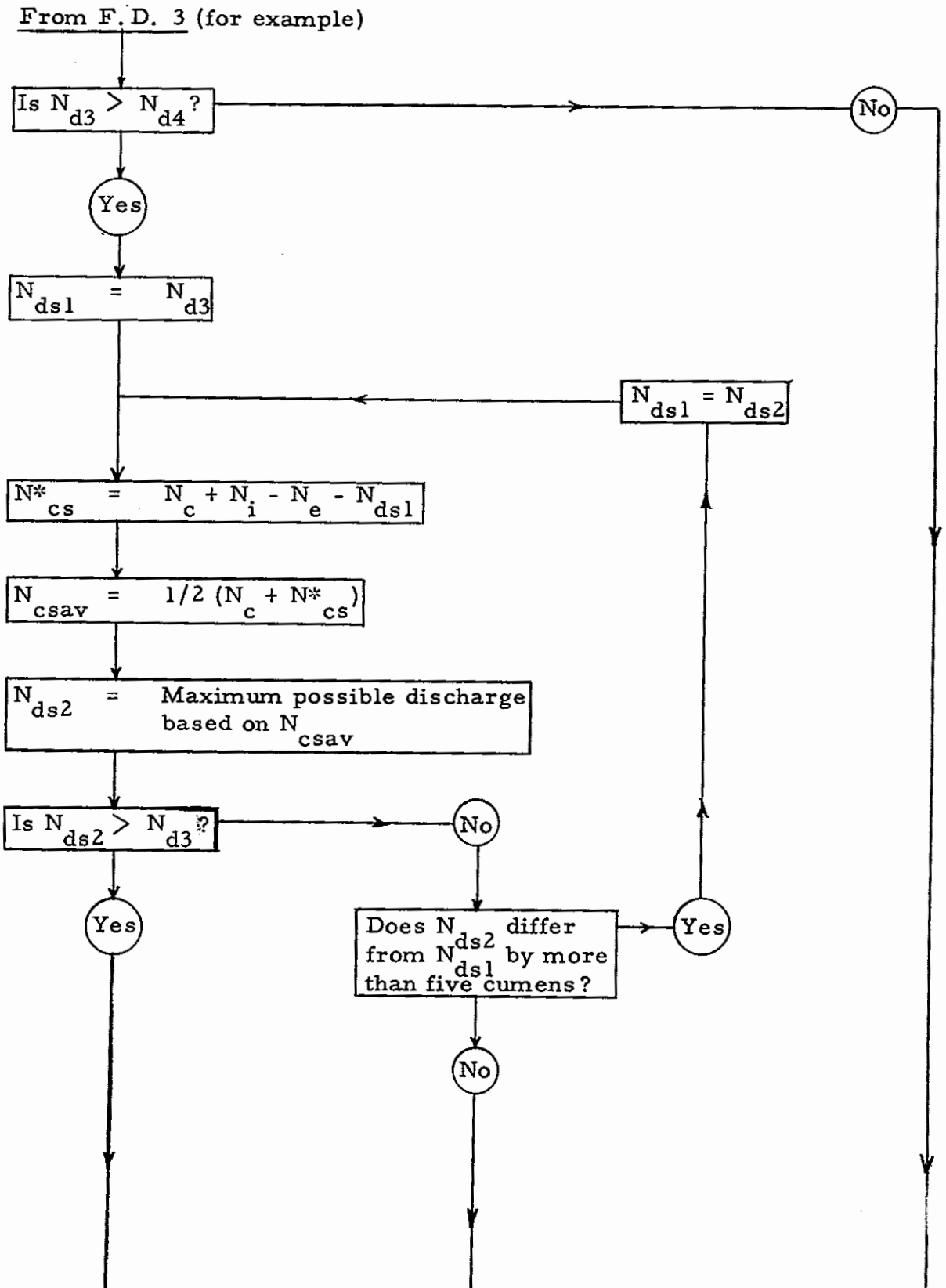

Flow Diagram 15, Typical Subroutine for Maximum Mean Discharge Possible from Reservoir (continued)

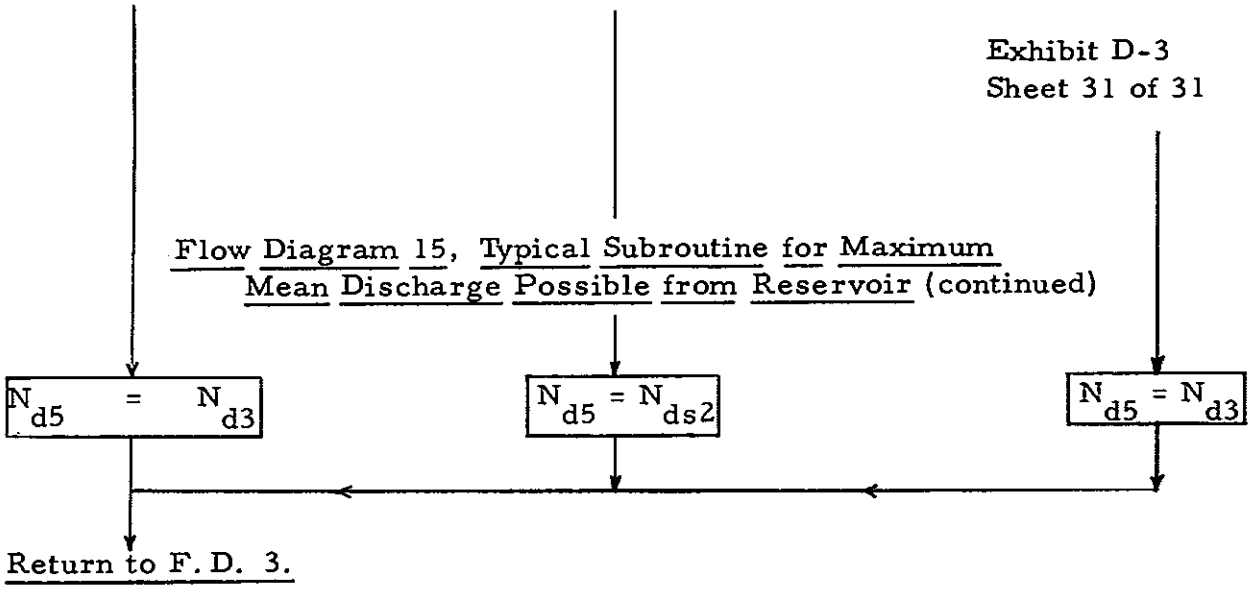

The same form of subroutine applies wherever specified in F. D. 9, F. D. 10, F. D. 11, and F. D. 12.

Exhibit D-4

Study No. .....

Form 20

HYDROLOGICAL SURVEY OF IRAQ

TIGRIS OPERATION STUDIES - PROGRAM NO. ....
RECORD OF SPECIFICATION FOR ~~IBM CO~~MPUTER

Phase____, Date: Formulated____; Sent to London ; Run____; Printed____

General Identification

1. Reservoirs
2. Irrig. Level
3. Kut Req't.
4. Eski Mosul Reqt.
5. R_{it}
6. D_{dmax}
7. W_{dmax}
8.
9.
10.

Irrigation Delivery Constants

11. p_1
12. x_1
13. x_2
14. y
15. K_1
16. K_2
17. K_3
18. K_4
19. K_5
20. K_6
21. $S_{(cc)1}$
22. $S_{(cc)2}$
23. $S_{(cc)3}$
24. K_7
25. V_1
26.

Specified Reservoir Contents

27. N_{cmax}
28. D_{cmax}
29. B_{cmax}
30. M_{cmax}
31. R_{cmax}
32. W_{cmax}
33. N_{cmin}
34. D_{cmin}
35. B_{cmin}
36. M_{cmin}
37. R_{cmin}
38. W_{cc}
39. R_{ct}
40.
41.

Flow Limitations

42. S_{umax}
43. N_{d2}
44. D_{d2}
45. B_{d2}
46. M_{d2}
47. R_{d2}
48. G'_{dc}
49. A'_{dc}
50. L_{dc}
51. Z_{dc}
52. F_{ic}
53. S_{dc}
54. G'_q
55. L_q
56.
57.

Initial Content (if different from c max)

58.
59.
60.

Other

61. 0_{mfr}
62. 0_{bfr}
63.
64.
65.
66.
67.
68.
69.

(See reverse side for comments on purpose and procedure and for remarks).

Purpose:

Procedure:

Remarks:

Exhibit D-5

DETAILS OF DIFFERENCES BETWEEN PROGRAMS 1.1 AND 1.2

Elimination of Cycling

The following subroutine is used for the reservoirs at Dokan, Bekhme, and Derbend-i-Khan. In order to relase the necessary space for storage of the extra instructions in the computer, the discharge capacities of Eski Mosul and Fatha have been made unlimited.

New Discharge Subroutine

ENTRY

I = Monthly inflow (net)
C = Content
D = Discharge

Find portion of discharge on which C lies.

Assume that locally, i.e., between any two nodal points, $D = aC + b$

$$C^* = Ce^{-a} - \frac{I\,(e^{-a} - I)}{a} + b\frac{(e^{-a} - I)}{a}$$

$$D = C + I - C^*$$

EXIT

Elimination of Residual Flows at Kdns

This change consists in revising the last part of Flow Diagram 8 as follows:

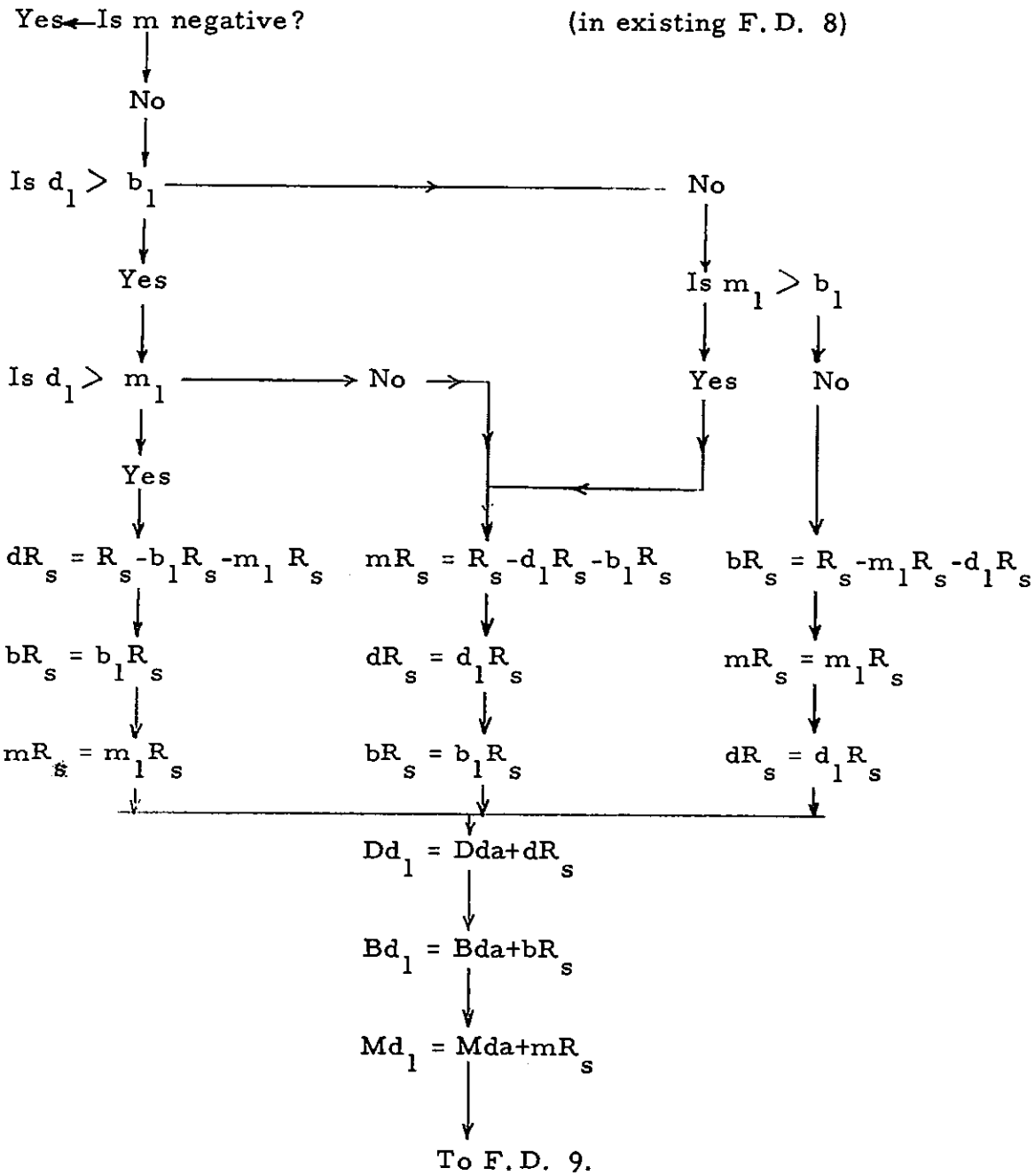

Revision of Criteria to Determine Scheduling of Summer Irrigation

In several of the studies that involve storage at only two or three upstream reservoirs, the draft on storage is so heavy in the summer of 1930 that large shortages in the following winter can be avoided only by selecting an uneconomically low value of irrigation demands (P1). This situation occurs because the June-through-October streamflow for 1930 is the lowest of the entire period studied.

In actual practice this low summer flow could be predicted by June first, since there is a good correlation between May flow and June-through-October flow; the reservoir content criteria S_{cc1} and S_{cc2} could be revised accordingly.

The program has been modified to adjust S_{cc1} and S_{cc2} in accordance with the May streamflow. The most convenient index of May flow would be the sum of the May inflow to the four upstream reservoir sites. This is computed by the machine in May, and the adjusted values of S_{cc1} and S_{cc2} can be expressed by the following equations:

$$S_{cc1'} = S_{cc1} + 0.8\,(3000 - \text{May Inflow})$$

$$S_{cc2'} = S_{cc2} + 0.8\,(3000 - \text{May Inflow}).$$

Exhibit D-6

BASIC DATA, VARIABLES AND UNKNOWNS

Basic Data

Basic data for the Tigris operation studies were furnished by the Hydrological Survey of Iraq. Their values do not change from run to run, but different studies may of course use different combinations of data. Some of the data are subject to revision from time to time as the studies of the various organizations which originally furnished them continue. The basic data are as follows:

1. Inflow. Monthly figures for the period of the analysis.

   A_{it} B_i D_i G_{it} M_i N_i R_{it} J_{it}

2. Reservoir evaporation losses. Average annual losses for different contents and a percentage factor for each month.

   B_e D_e M_e N_e R_e W_e

3. Maximum physically possible discharge from storage reservoirs. Tables of discharge versus contents.

   B_{d4} D_{d4} M_{d4} N_{d4} R_{d4} W_{d2}

4. Net irrigation diversions. Monthly throughout year for each of three stages of development.

   $X_{\underline{m}}$ $X_{\underline{mf}}$ $X_{\underline{zf}}$ X_{fr} X_{rs} X_{sj} X_{jy} X_{yk} X_k

   $X_{\underline{zl}}$ $X_{\underline{dl}}$ X_{la} X_{ag} X_g X_{ng}

   Of these, X_{mf} may have a negative value in some studies. The diversions underlined may be put equal to zero or given different values in the computation when certain reservoirs are eliminated.

Items Which May Vary from Run to Run

These items are specified for each run by the Hydrological Survey of Iraq. For any particular run many of the items are omitted or given values that automatically eliminate them from the computations. In case of a revision of the program there may be slight changes in the list. The items for Programs 1.1 and 1.2 are as follows:

1. Reservoirs. Bekhme, Eski Mosul, Fatha, and Wadi Tharthar Reservoirs may be in or out of the system.

2. Maximum allowable contents of storage reservoirs (Flood control "rule curves"). Monthly values of these contents at end of month for a full year.

   N_{cmax} D_{cmax} B_{cmax} M_{cmax} W_{cmax} R_{cmax}

3. Minimum allowable contents of storage reservoirs. These are usually constant throughout a year, but program can handle different values for each month. The items are:

   N_{cmin} D_{cmin} B_{cmin} M_{cmin} R_{cmin}

4. Minimum content of Wadi Tharthar Reservoir for command. This will be a constant value throughout a particular run.

   W_{cc}

5. Minimum target content of Fatha. This value is usually constant throughout a year, but the program can handle different values for each month.

   R_{ct}

6. Minimum allowable discharge below storage reservoirs. These values are usually constant throughout the year, but the program can handle different values for each month.

   N_{d2} D_{d2} B_{d2} M_{d2} N_{d2} R_{d2}

7. Canal capacities

G_{q1} L_q S_{umax} W_{dmax}

8. Critical total reservoir contents

$S_{(cc)1}$ $S_{(cc)2}$ $S_{(cc)3}$

9. Percentage of full irrigation demands

p_1 x_1 x_2 y e

10. Irrigation delivery constants

K_1 K_2 K_3 K_4 K_5 K_6 K_7

11. Irrigation distribution characteristics

0_{mfr} 0_{bfr}

12. Navigation requirements

V_1

13. Minimum river flow. For "amenities."

G_{dc} A_{dc} L_{dc} Z_{dc} F_{ic} S_{dc}

Results Punched

First Monthly Card

Reservoir discharges:

B_d D_d M_d N_d R_d W_d

Reservoir contents:

B_c D_c M_c N_c R_c W_c.

Flow at Baghdad, $Y_t - G_d$

p, p_e

$S_{(c)}$ at end of month

K_{dns}

Second Monthly Card

Canal head discharges:

Z_u L_u A_u S_u

Key river discharges:

S_d Z_d L_d G_d J_t Y_t K_d

G_q A_d A_q F_{id}

S (irrigation) for month

S (evaporation) for month

Yearly

$S_{(c)}$ at end of May

$S_{(e)}$ at end of May

Annual evaporation for each reservoir:

S (irrigation) for each reservoir

S (K_{dns}) both positive and negative summations

Exhibit D-7

PROGRAM OPERATING INSTRUCTIONS FOR THE ELECTRONIC COMPUTER

Introduction

This exhibit contains all the necessary information to enable a complete run to be made on the IBM Type 650 computer, including preparation of data, operating the machine, program and error stops, and tabulation of results. The wiring diagrams for the 407 control panels are not included.

Preparation of Data

The data for each run are divided into five sections as follows:

1. 1/Card parameter cards. These are defined by the specification record (Form 20) and are read into individual locations along with the program.

2. Monthly inflow data. This consists of one card for each month of the run, these being read by the program as the run progresses.

3. Reservoir limits and irrigation offtake data. This consists of 4 cards for each month of the year giving a total of 48 cards in the complete deck. This deck must be recirculated through the 407 read feed as the run progresses and in practice it is useful to have 2 or 3 copies of the deck in order to save card handling. In this section there are also 8 header cards which are used for the PRE-TOS print out program.

4. Tables of discharge and evaporation. These are loaded 7 per card along with the program.

5. Console setting. This is determined by the particular reservoirs included in the run and also by certain other criteria.

Detailed preparation of data for the individual sections is explained below.

Parameter Cards

The complete list of specification records and items together with the locations into which they are to be loaded follows:

No. on Sp/Rcd	Item	Loc'n.	No. on Sp/Rcd	Item	Loc'n.	No. on Sp/Rcd	Item	Loc'n.
7	W_{dmax}	0344	23	$S_{(cc)3}$	0355	51	Z_{dc}	0178
11	p_1	0096	24	K_7	1594	52	F_{ic}	0612
12	x_1	0137	25	V_1	1863	53	S_{dc}	0268
13	x_2	0088	38	W_{cc}	0072	54	G'_{q1}	0900
14	Y	0216	42	S_{umax}	1843	55	L_q	0162
15	K_1	0146	43	N_{d2}	0275	61	0_{mfr}	0902
16	K_2	0180	44	D_{d2}	1303	62	0_{bfr}	0952
17	K_3	0856	45	B_{d2}	0620		$N_{c\ initial}$	0122
18	K_4	0021	46	M_{d2}	0520		$D_{c\ initial}$	0506
19	K_5	0068	47	R_{d2}	0925		$B_{c\ initial}$	0048
20	K_6	0906	48	G'_{dc}	0853		$M_{c\ initial}$	0014
21	$S_{(cc)1}$	0606	49	A'_{dc}	1053		$R_{c\ initial}$	0130
22	$S_{(cc)2}$	0026	50	L_{dc}	1021		$W_{c\ initial}$	0015

The values of these parameters are obtained from the specification record (Exhibit D-4). The initial contents of the reservoirs will be

obtained from the particular rule curves stated by the specification record in items 27-32. Unless otherwise stated the values taken from the rule curves will be those for the end of May. If the initial contents are different from the rule curves they will be specified by items 58-60.

Each item is loaded by means of a single load card. Thus if, for a particular run, we wish to alter only the value of, say, p_1, we need alter only the relevant card.

The program is normally set to run from 1929 to 1937. If it is required to run for the whole of the 27-year period, an extra card must be put at the end of the parameter cards to load 0000501956 into location 1687.

Monthly Inflow Data

Monthly inflow cards will be one of two decks depending on whether the system is to be run "With Bakurman" or "Without Bakurman" (see Specification Record, item 5). The two decks are marked accordingly.

The format of these cards is as follows:

Card Columns

1 8	9 16	17 24	25 32	33 40	41 48	49 56	57 64	65 72	73 80
0XX0XXXX	A_{it}	B_i	D_i	M_i	N_i	G_{it}	R_{it}	J_{it}	Zeros

XX = Month
XXXX = Year

Signs must be punched over columns 8, 16, 24, 32, 40, 48, 56, 64, 72, and 80. In addition an 11 must be punched in card column 2.

Reservoir Limits and Irrigation Offtake Data

This is the most complicated part of the data, and great care should be taken in the preparation and checking. The deck consists of 48 cards, four for each month of the year, with formats as follows:

Card Columns

1 8	9 16	17 24	25 32	33 40	41 48	49 56	57 64	65 72	73 80
n_1 $1000n_2$	Evapn.%	X_{ng}	X_g	N^*_{cmin}	N^*_{cmax}	X_{ag}	X_{la}	X_{zl}	X_{yk}
n_1 $2000n_2$	X_k	X_{sj}	X_{jy}	X_{rs}	R^*_{ct}	X_{fr}	X_{mf}	X_m	X_{zf}
n_1 $3000n_2$	X_{dl}	D^*_{cmax}	D^*_{cmin}	B^*_{cmax}	B^*_{cmin}	M^*_{cmax}	M^*_{cmin}	X_m	X_{mf}
n_1 $4000n_2$	X_{fr}	R^*_{cmax}	R^*_{cmin}	X_{rs}	X_{sj}	X_{jy}	W^*_{cmax}	X_{yk}	X_k

Signs must be punched over card columns 8, 16, 24, 32, 40, 48, 56, 64, 72, and 80.

The "n_1" in columns 1 and 2 refers to the month and varies from 1 to 12. The "n_2" in columns 7 and 8 is to identify the number of the card in the deck and varies from 1 to 48. The evaporation percentage is the monthly distribution of the annual evaporation and has the following values in order from January to December:

1, 2, 3, 6, 11, 17, 20, 17, 11, 7, 3, 2.

The "X's" refer to the irrigation offtakes. It will be noted that some of them appear on two different data cards in the same month. This is because, owing to the circulation of data, the information on any given card is available for only a limited period; it is thus necessary in some cases to repeat the information.

The actual data used for the irrigation offtakes depend on the irrigation level and Eski Mosul requirement as indicated by the specification record (items 2 and 4).

The reservoir maximum and minimum data and target figures (R_{ct}) are defined either by a rule curve or by a definite figure (e.g., $N_{cmin} = 200$) indicated in the specification record. In the case of a constant figure, it must be on the data card for each month of the year.

The eight header cards which are at the beginning of the 407 data cards consist of the following:

1. A single card punched as follows:

c.c. 2 -	11 punch
c.c. 9 - 11	TOS
c.c. 17 - 19	RUN
c.c. 22 - 24	No. of Run
c.c. 33 - 37	SPECN.
c.c. 41 - 46	RECORD

2. Four cards which are duplicates of the 407 data cards for May (i.e., the last four cards in the main 407 deck).

3. Three blank cards.

Tables of Discharge and Evaporation

These are loaded 7/Card along with the program.

In general all the evaporation and discharge tables can be loaded with all runs, since if a particular reservoir is not included, the program itself will ignore the tables pertaining to that reservoir. The one exception is Dokan Reservoir, for which there are two discharge tables, one using two penstocks and the other using five penstocks. Each of these is on a separate card, and for each run the appropriate one should be included.

Under the current system (Program 1.2) of including the discharge tables, provision is made for up to 12 nodal points per reservoir, the following regions being allocated:

locations	0000-0011	Bekhme	nodal points
locations	0050-0061	Dokan	nodal points
locations	0100-0111	Eski Mosul	nodal points
locations	0150-0161	Fatha	nodal points
locations	0200-0211	Derbend-i-Khan	nodal points
locations	0250-0261	Wadi Tharthar	nodal points

In any given location the content is stored in the more significant half and the corresponding discharge capacity in the less significant half of the location.

The evaporation tables are included for values of the content at intervals of 100 cumens. Storage is allocated as follows:

locations	0400-0432	Bekhme	Evaporation Table
locations	0450-0481	Dokan	Evaporation Table
locations	0550-0597)	Eski Mosul	Evaporation Table
locations	0600-0602)		
locations	0650-0664	Derbend-i-Khan	Evaporation Table
locations	0700-0747)	Fatha	Evaporation Table
locations	0750-0797)		
locations	0800-0828	Wadi Tharthar	Evaporation Table

The data are stored in the locations as in the discharge tables; i. e., the content in the more significant half and the corresponding evaporation in the less significant half.

Console Setting

The console setting for a particular run is determined by the answers to a series of questions regarding that run. Depending on the answers, the console switches are set to either 8 or 9 as follows:

			Yes	No
Position	1	Is Wadi Tharthar included?	8	9
	2	Is Eski Mosul included?	8	9
	3	Is Bekhme included?	8	9
	4	Is Dokan included?	8	9
	5	Is Fatha included?	8	9
	6	Is monthly punching required?	8	9
	7	Is recycling required?	8	9
	8	Is it required to change style of punching on recycling?	8	9

Positions 9 and 10 are not used. Note that by "position 1" the least significant (right hand) position is meant.

Program Operation

The panels used for running Program 1.2 are the Standard DPC panel on the 533 and DPC panel No. 7 on the 407. The switches are initially as follows:

650 Console

Programmed	STOP
Half Cycle	RUN
Control	RUN
Overflow	STOP
Error	STOP
Display	PROGRAM REGISTER

407

Alteration Switch 2 - ON
All others (including end of file) - OFF
407 switched to hook-up operation

It is essential to zero the drum before commencing any run. In addition, should more than one run be made during any spell on the machine, the drum must be zeroed and the program reloaded between each run or partial run.

After the drum has been zeroed, load the 533 read feed with following decks in order:

1. The 1/card parameter cards which have been punched from the specification sheet for that run,

2. PRETOS program deck,

3. Program 1.2 program deck.

Load the 407 feed with the first eight cards (the eight header cards) from the 407 data deck. The first of these header cards should contain the number of the run in card columns 22-24.

Set 70 1951 3000 on the console; press "computer reset" and "program start"; and also press start key on 533. When program stops on "73" instruction, press start button on 407. When program stops on "74" instruction, put 407 End of File switch on and press 407 start button; then remove first deck of cards (parameter cards) from 533 read stacker and put on top of cards in 533 read feed.

When program stops again on "70" instruction with no more cards in 533 read feed, press End of File button to finish off the card reading. Then run cards out and load the read feed with appropriate monthly inflow data deck.

Run out cards from 407 read feed and put End of File switch off. Reload the feed with remainder of 407 data cards. Set the console according to instructions for the run in progress. Transfer control to 0300; press computer reset and start. Whenever the program stops on a "73" instruction, remove the cards which are in the 407 stacker, put in the read feed, and press the start button. Thus the 407 data deck (less eight header cards) is circulated through the 407, the number of times depending upon the length of the run.

Program and Error Stops

Program stops are tabulated as follows:

	Program Register	Cause	Procedure
(a)	01 9999 9999	End of Run	
(b)	01 0363 0363) 01 1514 1514)	$N_d < N_{d1}$	Note L. A. (= $N_{d1} - N_d$). Note Dist. (= N_d). Make a note of card held fast in 533 read stacker. The month concerned is two months later than this. Put PROGRAM RUN and press start.
(c)	01 0979 0979	d + b + m not nearly equal to unity (.98 or less)	Note Dist. (d + b + m). Then as for (b) above.
(d)	01 0374 0374	$F_{id} < F_{ic}$	Note L. A. (F_{id}). Note Dist. (F_{ic}). Then as for (b) above.
(e)	01 0637 0637	$Z_d < Z_{dc}$	Note L. A. (Z_d). Note Dist. (Z_{dc}). Then as for (b) above.
(f)	01 0630 0630	$L_d < L_{dc}$	Note L. A. (L_d). Note Dist. (L_{dc}). Then as for (b) above.

Note that all programed stops have 01 as the most significant digits in the program register.

If the program stops with the distributor error light on and the instruction address of the program register is 0354, one of the data cards is in error.

If the data address of the program register is between 1951 and 1960, it is a 533 data card. Remove the cards still in the read feed and run out the remainder. The error card is the fourth from the back. If there are no cards in the read feed when the error occurs, it can be located by removing all the loose cards in the stacker and then running out the remainder; after taking these steps, the error card is the third from the front.

When the error card has been located and corrected, put it back in its correct place in the deck, and beginning with that card reload the cards into the read feed. Transfer control to 0350.

If on the other hand the data address of the program register is between 1939 and 1948, the error is on a 407 data card. A similar technique is employed to find the card in error. After correction replace in 407 read feed as with 533 error procedure. The restart address depends upon the contents of location 0310, as follows:

If C(0310) is	65 1946 0360,	transfer control to 0304.
If C(0310) is	60 1940 1895,	transfer control to 1103.
If C(0310) is	60 1940 0996,	transfer control to 0860.
If C(0310) is	65 1954 1810,	transfer control to 1390.
If C(0310) is	65 0012 1790,	transfer control to 1490.
If C(0310) is	65 0012 1634,	transfer control to 1545.

Any other error stops are due to possible machine errors.

Note that should the machine run for more than ten seconds without punching (if it is set for monthly punching) or should it run for more than

two minuites without punching (if it is set for yearly punching), it is likely that it is cycling, a condition which may arise from the state of the reservoirs. In this event carry out the following procedure:

1. Stop the 650.

2. Address stop 0914 and press Program Start.

3. Half cycle one step and notice the program register. This will identify the reservoir, as follows:

   If P.R. is 16 0245 0515, reservoir is Derbend-i-Khan
   If P.R. is 16 1013 1718, reservoir is Eski Mosul
   If P.R. is 16 0963 1570, reservoir is Bekhme
   If P.R. is 16 0829 1333, reservoir is Dokan
   If P.R. is 16 1126 1681, reservoir is Fatha

   Also note Lower Accumulator for value.

4. Repeat step 2 above two or three times in order to obtain the values between which the discharge is oscillating.

Listing of Results

Run out the cards from the punch stacker and remove the blank cards from the front and back. Sort the cards on card column 1. This produces three decks of cards except when the machine has been set for yearly punching, in which case there will be only the one deck. The decks are labeled as follows:

A. Monthly cards (1 in card column 1)
B. Monthly cards (2 in card column 1)
C. Yearly cards (3 in card column 1)

Put a blank card at the head of Deck A and list with special tape A and T. O. S. 407 panel 1. Put a blank card at the head of Deck B and list with special tape A and T. O. S. 407 panel 2. Put the three yearly header cards at the head of Deck C and list with special tape B and T. O. S. 407 panel 3.

Exhibit D-8

ABBREVIATIONS USED IN OUTPUT OF COMPUTER STUDIES

Sheet 1

C	End-of-month contents of a reservoir, cumens
D	Average monthly discharge from a reservoir, cumecs
P	Percentage of specified irrigation level to be supplied
PE	Percentage of specified irrigation level to be supplied from Dokan and Derbend-i-Khan Reservoirs
KUT NET	Flow of Tigris River at end of system, cumecs (Significant negative values indicate shortages.)

Sheet 2

ZD	Flow of Greater Zab River downstream of Makmour Canal headworks, cumecs
LD	Flow of Lesser Zab River downstream of Zab-Adhaim Feeder Canal, cumecs
AD	Flow of Adhaim River downstream of Adhaim-Diyala Feeder Canal, cumecs
GD	Flow of Diyala River downstream of Diyala Weir, cumecs
ZU	Flow at upstream end of Makmour Canal, cumecs
LU	Flow at upstream end of Zab-Adhaim Feeder Canal, cumecs
AQ	Natural flow in Adhaim River, cumecs
AU	Flow at upstream end of Adhaim-Diyala Feeder Canal, cumecs

Sheet 2 (continued)

FID	Flow of Tigris River upstream of Greater Zab River, cumecs
SU	Diversion at Samarra Barrage into Wadi Tharthar, cumecs
SD	Flow in Tigris River downstream of Samarra Barrage, cumecs
JT	Flow in Tigris River downstream of Adhaim River, cumecs
YT	Flow in Tigris River downstream of Diyala River, cumecs
KD	Flow in Tigris River downstream of Kut, cumecs
I	Total irrigation requirements, cumens
E	Total reservoir evaporation, cumens

Annual Summary Sheet

IRRIG DELIVERY	Irrigation delivery requirements, cumens
KDNS	Net flow in Tigris River at end of system, cumens
NE	Annual evaporation from Derbend-i-Khan Reservoir, cumens
DE	Annual evaporation from Dokan Reservoir, cumens
BE	Annual evaporation from Bekhme Reservoir, cumens
ME	Annual evaporation from Eski-Mosul Reservoir, cumens

Annual Summary Sheet (continued)

RE	Annual evaporation from Fatha Reservoir, cumens
WE	Annual evaporation from Wadi Tharthar, cumens

Exhibit D-9

RESERVOIR EVAPORATION DATA

Eski Mosul Reservoir

Reservoir Content (Cumens)	Annual Evaporation at Constant Content (cumens)									
	0	10	20	30	40	50	60	70	80	90
0	0	2	4	6	8	10	13	15	17	19
100	21	22	24	26	27	28	30	32	33	34
200	36	37	39	40	41	42	44	45	46	48
300	49	50	51	53	54	55	56	57	59	60
400	61	62	63	64	65	66	68	69	70	71
500	72	73	74	75	76	78	79	80	81	82
600	83	84	85	86	87	88	89	90	91	92
700	93	94	95	96	97	98	99	100	101	102
800	103	104	105	106	107	108	108	109	110	111
900	112	113	114	115	116	116	117	118	119	120
1000	121	122	123	124	125	126	126	127	128	129
1100	130	131	131	132	133	134	134	135	136	136
1200	137	138	138	139	140	140	141	142	143	143
1300	144	145	145	146	147	148	148	149	150	150
1400	151	152	152	153	153	154	155	155	156	156
1500	157	158	158	159	159	160	161	161	162	162
1600	163	164	164	165	165	166	167	167	168	168
1700	169	170	170	171	171	172	173	173	174	174
1800	175	176	176	177	177	178	179	179	180	180
1900	181	182	182	182	183	184	184	184	185	186
2000	186	186	187	188	188	188	189	190	190	190
2100	191	192	192	192	193	194	194	194	195	196
2200	196	196	197	198	198	198	199	200	200	200
2300	201	202	202	202	203	204	204	204	205	206
2400	206	206	207	208	208	208	209	210	210	210
2500	211	212	212	212	213	214	214	214	215	216
2600	216	216	217	217	218	218	218	219	219	220
2700	220	220	221	222	222	222	223	224	224	224
2800	225	226	226	226	227	228	228	228	229	230
2900	230	230	231	231	232	232	232	233	233	234

RESERVOIR EVAPORATION DATA

Eski Mosul Reservoir (continued)

Reservoir Content (Cumens)	Annual Evaporation at Constant Content (cumens)									
	0	10	20	30	40	50	60	70	80	90
3000	234	234	235	236	236	236	237	238	238	238
3100	239	240	240	240	241	242	242	242	243	244
3200	244	244	245	245	246	246	246	247	247	248
3300	248	248	249	250	250	250	251	252	252	252
3400	253	253	254	254	255	255	255	256	256	257
3500	257	258	258	258	259	260	260	260	261	262
3600	262	262	263	263	264	264	264	265	265	266
3700	266	266	267	267	268	268	268	269	269	270
3800	270	270	271	271	272	272	272	273	273	274
3900	274	274	275	275	276	276	276	277	277	278
4000	278	278	279	280	280	280	281	282	282	282
4100	283	283	284	284	285	285	285	286	286	287
4200	287	287	288	288	289	289	289	290	290	291
4300	291	291	292	292	293	293	293	294	294	295
4400	295	295	296	296	297	297	297	298	298	299
4500	299	299	300	300	301	301	301	302	302	303
4600	303	303	304	304	304	304	305	305	305	306
4700	306	306	307	307	308	308	308	309	309	310
4800	310	310	311	311	311	312	312	312	312	313
4900	313	313	314	314	315	315	315	316	316	317
5000	317									

RESERVOIR EVAPORATION DATA

Bekhme Reservoir

Reservoir Content (Cumens)	Annual Evaporation at Constant Content (cumens)									
	0	10	20	30	40	50	60	70	80	90
0	0	1	2	3	4	5	6	7	8	9
100	10	11	11	12	13	14	14	15	16	16
200	17	18	18	19	19	20	21	21	22	22
300	23	24	24	24	25	26	26	26	27	28
400	28	28	29	30	30	30	31	32	32	32
500	33	34	34	34	35	36	36	36	37	38
600	38	38	39	39	40	40	40	41	41	42
700	42	42	43	43	44	44	44	45	45	46
800	46	46	47	47	48	48	48	49	49	50
900	50	50	51	51	52	52	52	53	53	54
1000	54	54	55	55	55	56	56	56	56	57
1100	57	57	58	58	58	58	59	59	59	60
1200	60	60	61	61	61	62	62	62	62	63
1300	63	63	64	64	64	64	65	65	65	66
1400	66	66	66	67	67	67	67	67	68	68
1500	68	68	69	69	69	70	70	70	70	71
1600	71	71	72	72	72	72	73	73	73	74
1700	74	74	74	75	75	75	75	75	76	76
1800	76	76	77	77	77	78	78	78	78	79
1900	79	79	79	80	80	80	80	80	81	81
2000	81	81	82	82	82	82	83	83	83	84
2100	84	84	84	85	85	85	85	85	86	86
2200	86	86	87	87	87	88	88	88	88	89
2300	89	89	89	90	90	90	90	90	91	91
2400	91	91	91	92	92	92	92	92	93	93
2500	93	93	93	94	94	94	94	94	95	95
2600	95	95	95	96	96	96	96	96	97	97
2700	97	97	98	98	98	98	99	99	99	100
2800	100	100	100	101	101	101	101	101	102	102
2900	102	102	102	103	103	103	103	103	104	104
3000	104	104	104	105	105	105	105	105	106	106
3100	106	106	106	107	107	107	107	107	108	108
3200	108									

RESERVOIR EVAPORATION DATA

Dokan Reservoir

Reservoir Content (Cumens)	Annual Evaporation at Constant Content (cumens)									
	0	10	20	30	40	50	60	70	80	90
0	0	1	3	4	6	7	8	10	11	13
100	14	15	17	18	19	20	22	23	24	26
200	27	28	29	31	32	33	34	35	37	38
300	39	40	41	42	43	44	46	47	48	49
400	50	51	52	53	54	55	56	57	58	59
500	60	61	62	63	64	65	66	67	68	69
600	70	71	72	73	74	75	76	77	78	79
700	80	81	82	83	84	84	85	86	87	88
800	89	90	91	92	93	94	94	95	96	97
900	98	99	100	101	102	102	103	104	105	106
1000	107	108	109	110	111	112	112	113	114	115
1100	116	117	118	118	119	120	121	122	122	123
1200	124	125	126	126	127	128	129	130	130	131
1300	132	133	133	134	135	136	136	137	138	138
1400	139	140	140	141	142	142	143	144	145	145
1500	146	147	147	148	149	150	150	151	152	152
1600	153	154	154	155	155	156	157	157	158	158
1700	159	160	160	161	161	162	163	163	164	164
1800	165	166	166	167	167	168	169	169	170	170
1900	171	172	172	173	173	174	175	175	176	176
2000	177	178	178	178	179	180	180	180	181	182
2100	182	182	183	184	184	184	185	186	186	186
2200	187	188	188	188	189	190	190	190	191	192
2300	192	192	193	194	194	194	195	196	196	196
2400	197	198	198	198	199	200	200	200	201	202
2500	202	203	203	204	204	205	206	206	207	207
2600	208	208	209	210	210	210	211	212	212	212
2700	213	214	214	214	215	216	216	216	217	218
2800	218	219	219	220	220	221	222	222	223	223
2900	224	224	225	226	226	226	227	228	228	228
3000	229	230	230	230	231	232	232	232	233	234
3100	234									

RESERVOIR EVAPORATION DATA

Derbend-i-Khan Reservoir

Reservoir Content (Cumens)	Annual Evaporation at Constant Content (cumens)									
	0	10	20	30	40	50	60	70	80	90
0	0	1	2	3	4	6	7	8	9	10
100	11	12	12	13	14	14	15	16	17	17
200	18	18	19	19	20	20	20	21	21	22
300	22	22	23	23	24	24	24	25	25	26
400	26	26	27	28	28	28	29	30	30	30
500	31	32	32	32	33	34	34	34	35	36
600	36	37	37	38	38	39	40	40	41	41
700	42	43	44	44	45	46	47	48	48	49
800	50	51	52	53	54	54	55	56	57	58
900	59	60	61	62	63	64	65	66	67	68
1000	69	70	71	72	73	74	76	77	78	79
1100	80	81	82	84	85	86	87	88	90	91
1200	92	93	94	95	96	98	99	100	101	102
1300	103	104	105	106	107	108	110	111	112	113
1400	114									

RESERVOIR EVAPORATION DATA

Fatha Reservoir

Reservoir Content (Cumens)	Annual Evaporation at Constant Content (cumens)									
	0	10	20	30	40	50	60	70	80	90
0	0	1	2	3	4	5	6	7	8	9
100	10	11	12	13	14	15	16	17	18	19
200	20	22	23	24	26	28	29	30	32	34
300	35	36	38	40	41	43	44	46	47	48
400	50	52	53	54	56	58	59	60	62	65
500	65	66	68	70	71	72	74	76	77	78
600	80	82	83	84	86	88	89	90	92	94
700	95	96	98	100	101	102	104	106	107	108
800	110	112	113	114	116	118	119	120	122	124
900	125	126	128	129	131	132	133	135	136	138
1000	139	140	142	143	145	146	147	149	150	152
1100	153	154	156	157	159	160	161	163	164	166
1200	167	168	170	171	173	174	175	177	178	180
1300	181	182	184	185	187	188	189	191	192	194
1400	195	196	198	200	201	202	204	206	207	208
1500	210	211	213	214	216	217	218	220	221	223
1600	224	226	227	228	230	232	233	234	236	238
1700	239	240	242	243	245	246	247	249	250	252
1800	253	254	256	257	259	260	261	263	264	266
1900	267	268	270	271	273	274	275	277	278	280
2000	281	282	284	285	287	288	289	291	292	294
2100	295	296	298	299	301	302	303	305	306	308
2200	309	310	312	313	314	316	317	318	319	321
2300	322	323	325	326	328	329	330	332	333	335
2400	336	337	339	340	342	343	344	346	347	349
2500	350	351	353	354	355	356	358	359	360	362
2600	363	364	366	367	369	370	371	373	374	376
2700	377	378	380	381	383	384	385	387	388	390
2800	391	392	394	395	397	398	399	401	402	404
2900	405	406	408	409	411	412	413	415	416	418

RESERVOIR EVAPORATION DATA

Fatha Reservoir (continued)

Reservoir Content (Cumens)	Annual Evaporation at Constant Content (cumens)									
	0	10	20	30	40	50	60	70	80	90
3000	419	420	422	423	425	426	427	429	430	432
3100	433	434	436	437	439	440	441	443	444	446
3200	447	448	450	451	453	454	455	457	458	460
3300	461	462	464	465	466	468	469	470	471	473
3400	474	475	477	478	480	481	482	484	485	487
3500	488	489	491	492	494	495	496	498	499	501
3600	502	503	505	506	508	509	510	512	513	515
3700	516	517	519	520	522	523	524	526	527	529
3800	530	531	533	534	535	536	538	539	540	542
3900	543	544	546	547	549	550	551	553	554	556
4000	557	558	560	561	562	564	565	566	567	569
4100	570	571	573	574	576	577	578	580	581	583
4200	584	585	587	588	590	591	592	594	595	597
4300	598	599	601	602	604	605	606	608	609	611
4400	612	613	615	616	618	619	620	622	623	625
4500	626	627	629	630	632	633	634	636	637	639
4600	640	641	643	644	646	647	648	650	651	653
4700	654	655	657	658	660	661	662	664	665	667
4800	668	669	671	672	674	675	676	678	679	681
4900	682	684	685	686	688	690	691	692	694	696
5000	697	698	700	701	703	704	705	707	708	710
5100	711	712	714	716	717	718	720	722	723	724
5200	726	727	729	730	732	733	734	736	737	739
5300	740	741	743	744	746	747	748	750	751	753
5400	754	755	757	758	760	761	762	764	765	767
5500	768	770	771	772	774	776	777	778	780	782
5600	783	784	786	788	789	790	792	794	795	796
5700	798	799	801	802	804	805	806	808	809	811
5800	812	814	815	816	818	820	821	822	824	826
5900	827	828	830	832	833	834	836	838	839	840

RESERVOIR EVAPORATION DATA

Fatha Reservoir (continued)

Reservoir Content (Cumens)	Annual Evaporation at Constant Content (cumens)									
	0	10	20	30	40	50	60	70	80	90
6000	842	844	845	846	848	850	851	852	854	856
6100	857	858	860	862	863	864	866	868	869	870
6200	872	874	875	876	878	880	881	882	884	886
6300	887	888	890	891	893	894	895	897	898	900
6400	901	902	904	906	907	908	910	912	913	914
6500	916	918	919	920	922	924	925	926	928	930
6600	931	932	934	936	937	938	940	942	943	944
6700	946	948	949	950	952	954	955	956	958	960
6800	961	962	964	966	967	968	970	972	973	974
6900	976	978	979	980	982	984	985	986	988	990
7000	991	992	994	996	997	998	1000	1002	1003	1004
7100	1006	1008	1009	1010	1012	1014	1015	1016	1018	1020
7200	1021	1022	1024	1026	1027	1028	1030	1032	1033	1034
7300	1036	1038	1039	1040	1042	1044	1045	1046	1048	1050
7400	1051	1052	1054	1056	1057	1058	1060	1062	1063	1064
7500	1066	1067	1069	1070	1072	1073	1074	1076	1077	1079
7600	1080	1082	1083	1084	1086	1088	1089	1090	1092	1094
7700	1095	1096	1098	1100	1101	1102	1104	1106	1107	1108
7800	1110	1112	1113	1114	1116	1118	1119	1120	1122	1124
7900	1125	1126	1128	1130	1131	1132	1134	1136	1137	1138
8000	1140	1142	1143	1144	1146	1148	1149	1150	1152	1154
8100	1155	1156	1158	1159	1161	1162	1163	1165	1166	1168
8200	1169	1170	1172	1173	1174	1176	1177	1178	1179	1181
8300	1182	1183	1184	1186	1187	1188	1189	1190	1192	1193
8400	1194	1195	1196	1197	1198	1200	1201	1202	1203	1204
8500	1205	1206	1207	1208	1209	1210	1211	1212	1213	1214
8600	1215	1216	1217	1218	1219	1220	1220	1221	1222	1223
8700	1224	1225	1226	1227	1228	1228	1229	1230	1231	1232
8800	1233	1234	1235	1235	1236	1237	1238	1239	1239	1240
8900	1241	1242	1243	1243	1244	1245	1246	1247	1247	1248

RESERVOIR EVAPORATION DATA

Fatha Reservoir (continued)

Reservoir Content (Cumens)	Annual Evaporation at Constant Content (cumens)									
	0	10	20	30	40	50	60	70	80	90
9000	1249	1250	1250	1251	1252	1252	1253	1254	1255	1255
9100	1256	1257	1257	1258	1258	1259	1260	1260	1261	1261
9200	1262	1262	1263	1264	1264	1264	1265	1266	1266	1266
9300	1267	1268	1268	1268	1269	1270	1270	1270	1271	1272
9400	1272	1272	1273	1273	1274	1274	1274	1275	1275	1276
9500	1276	1276	1277	1277	1278	1278	1278	1279	1279	1280
9600	1280	1280	1281	1281	1281	1282	1282	1282	1282	1283
9700	1283	1283	1284	1284	1284	1284	1285	1285	1285	1286
9800	1286	1286	1287	1287	1287	1288	1288	1288	1288	1289
9900	1289									

See corrections on insert sheet following
MAR 12/16/64

NOTE:

After reservoir operation studies, using the above data, had been completed on the computer, errors were discovered in the Haigh Commission Report's capacity curve for Fatha Reservoir, from which the data had been derived. Evaporation losses as given above for Fatha Reservoir should be reduced as follows:

At a capacity of	Reduction in evaporation is
2000 cumens	0 percent
3000 cumens	11 percent
4000 cumens	14 percent
5000 cumens	19 percent
6000 cumens	21 percent
7000 cumens	24 percent
8000 cumens	25 percent
9000 cumens	23 percent

Manual adjustments to allow for these reduced evaporation losses were made to the results derived by the computer.

Provided by letter of Nov. 21, 1963 from V. A. Koelzer of Harza Inserted 10/16/64 MDR

RESERVOIR EVAPORATION DATA

Wadi Tharthar Reservoir

Reservoir Content (Cumens)	Annual Evaporation at Constant Content (cumens)									
	0	100	200	300	400	500	600	700	800	900
0		224	238	252	266	280	294	308	322	336
1000	350	360	370	380	390	400	410	420	430	440
2000	450	457	464	471	478	485	492	499	506	513
3000	520	526	532	538	544	550	556	562	568	574
4000	580	586	592	598	604	610	616	622	628	634
5000	640	646	652	658	664	670	676	682	688	694
6000	700	706	712	718	724	730	736	742	748	754
7000	760	765	770	775	780	785	790	795	800	805
8000	810	815	820	825	830	835	840	845	850	855
9000	860	864	868	872	876	880	884	888	892	896
10000	900	904	908	912	916	920	924	928	932	936
11000	940	944	948	952	956	960	964	968	972	976
12000	980	984	988	992	996	1000	1004	1008	1012	1016
13000	1020	1023	1026	1029	1032	1035	1038	1041	1044	1047
14000	1050	1053	1056	1059	1062	1065	1068	1071	1074	1077
15000	1080	1082	1084	1086	1088	1090	1092	1094	1096	1098
16000	1100	1102	1104	1106	1108	1110	1112	1114	1116	1118
17000	1120	1122	1124	1126	1128	1130	1132	1134	1136	1138
18000	1140	1143	1146	1149	1152	1155	1158	1161	1164	1167
19000	1170	1175	1180	1185	1190	1195	1200	1205	1210	1215
20000	1220	1225	1230	1235	1240	1245	1250	1255	1260	1265
21000	1270	1276	1282	1288	1294	1300	1306	1312	1318	1324
22000	1330	1336	1342	1348	1354	1360	1366	1372	1378	1384
23000	1390	1396	1402	1408	1414	1420	1426	1432	1438	1444
24000	1450	1455	1460	1465	1470	1475	1480	1485	1490	1495
25000	1500	1505	1510	1515	1520	1525	1530	1535	1540	1545
26000	1550	1556	1562	1568	1574	1580	1586	1592	1598	1604
27000	1610	1615	1620	1625	1630	1635	1640	1645	1650	1655
28000	1660									

RESERVOIR EVAPORATION DATA

Monthly Distribution of Evaporation as Determined By the Irrigation Development (Haigh) Commission, 1949

Month	Jan.	Feb.	Mar.	Apr.	May	June	July	Aug.	Sept.	Oct.	Nov.	Dec.
Evaporation (meters)	.03	.04	.07	.12	.22	.34	.40	.34	.22	.14	.05	.03
Percent of annual evaporation	1	2	3	6	11	17	20	17	11	7	3	2

Exhibit D-10

RULE CURVES OF MAXIMUM ALLOWABLE RESERVOIR CONTENT USED IN TIGRIS IRRIGATION OPERATION STUDIES

End-of-Month Content in Cumens

Rule Curve No.	Jan.	Feb.	Mar.	Apr.	May	June	July	Aug.	Sept.	Oct.	Nov.	Dec.
Debend-i-Khan (N_c max)												
1	950	950	950	1,040	1,140	1,140	1,140	1,140	1,140	1,140	1,040	950 1/
Dokan (D_c max)												
1	2,020	2,020	2,230	2,500	2,620	2,620	2,620	2,620	2,270	2,020	2,020	2,020 2/
Bekhme (B_c max)												
1	2,400	2,400	2,400	2,780	3,160	3,160	3,160	3,160	3,010	2,850	2,700	2,550
2	1,440	1,440	1,440	1,820	2,200	2,200	2,200	2,200	2,050	1,890	1,740	1,590
3	370	370	370	750	1,130	1,130	1,130	1,130	980	820	670	520
Eski Mosul (M_c max)												
1	1,854	1,854	1,854	2,377	2,900	2,900	2,900	2,900	2,691	2,482	2,272	2,063 3/
2	3,954	3,954	3,954	4,477	5,000	5,000	5,000	5,000	4,791	4,582	4,372	4,163 4/
3	2,854	2,854	2,854	3,377	3,900	3,900	3,900	3,900	3,691	3,482	3,272	3,036 5/
Fatha (R_c max)												
1	7,230	7,230	7,230	8,180	9,130	9,130	9,130	9,130	8,750	8,370	7,990	7,610 6/
2	7,990	7,990	7,990	8,560	9,130	9,130	9,130	9,130	8,900	8,670	8,450	8,220 7/
3	8,750	8,750	8,750	8,940	9,130	9,130	9,130	9,130	9,050	8,980	8,900	8,830 8/
Fatha												
4	4,940	4,940	4,940	5,890	6,840	6,840	6,840	6,840	6,460	6,080	5,700	5,320 6/
5	5,700	5,700	5,700	6,270	6,840	6,840	6,840	6,840	6,610	6,380	6,160	5,930 7/
6	6,460	6,460	6,460	6,650	6,840	6,840	6,840	6,840	6,760	6,690	6,610	6,540 8/
Fatha												
7	2,580	2,580	2,580	3,530	4,480	4,480	4,480	4,480	4,100	3,720	3,340	2,960 6/
8	3,340	3,340	3,340	3,910	4,480	4,480	4,480	4,480	4,250	4,020	3,800	3,570 7/
9	4,100	4,100	4,100	4,290	4,480	4,480	4,480	4,480	4,400	4,330	4,250	4,180 8/
Wadi Tharthar (W_c max)												
1	21,030	20,460	19,890	22,750	25,600	25,030	24,460	23,890	23,320	22,750	22,170	21,600
Hor es Saniyah (H_c max)												
1	400	400	400	1,200	2,000	2,000	2,000	2,000	1,680	1,360	1,040	720

1/ KTAM report
2/ Report rule curve
3/ Normal pool 320 m.
4/ Normal pool 335 m.
5/ Normal pool 328 m.
6/ No upstream storage except Dokan
7/ 1 additional upstream reservoir
8/ 2 additional upstream reservoirs

97.