USAID/PHILIPPINES
DEVELOPMENT INFORMATION CENTER
PN-ACQ-603

Cleaner Production/Pollution Prevention Risk Reduction Measurement Model Development

Technical Report No. 99/13

November 1999

Submitted by:

Chemonics International, Inc.

Under Contract No. 492-C-00-98-00029-00
Associated Number 492-0444
United States Agency for International Development

BEST AVAILABLE COPY

November 1999

Ms. Priscilla P. Rubio
Cognizant Technical Officer
Office of the Environmental Management
U.S. Agency for International Development
Ramon Magsaysay Building
1680 Roxas Boulevard, Malate 1004
Manila, Philippines

Subject : **Cleaner Production/Pollution Prevention Risk Reduction Measurement Model Development**

Project : **Industrial Initiatives for a Sustainable Environment (IISE) Contract No. 492-C-00-98-00029-00**

Dear Ms. Rubio:

In accordance with the requirements of the subject contracts, we are pleased to submit the Cleaner Production/Pollution Prevention Risk Reduction Measurement Model Development prepared by the IISE Technical Program Consultant, Dale Rice.

This Cleaner Production/Pollution Prevention Risk Reduction Measurement Model Development comprises a portion of the work undertaken by the Project's Technical Program component in conjunction with our efforts to achieve project targets.

If you have any questions regarding this report, please do not hesitate to contact me.

Sincerely,

John Dorr

John A. Dorr, Ph.D.
Chief of Party

Enclosures

Cc: see report distribution list

CEBU OFFICE:
2/F Block A, Mactan Marina Mall
Airport Road, Lapu Lapu City 6015
Mactan, Cebu, Philippines
Tel: (032) 340-8827
Fax: (032) 340-8829

MANILA OFFICE:
G/F Macondray Centre
2263 Pasong Tamo Extension
Makati City 1200, Philippines
Tel: (632) 819-0296 to 98
Fax: (632) 813-3822

DAVAO OFFICE:
4th Floor Philam Building
Rizal Street
Davao City, Philippines
Tel: (082) 224-3810 to 12
Fax: (082) 224-3813

e-mail: info@iise.org
website: http://www.iise.org

IISE is an Initiative of the Republic of the Philippines, funded by the U. S. Agency for International Development (USAID) and managed by Chemonics International, Inc.

REPORT DISTRIBUTION LIST

Funding Agency

US Agency for International Development

Government Partners

Department of Environment and Natural Resources
Department of Trade and Industry
Philippine Coast Guard

Other IISE Intermediate Results Team Members

Academe (AEMC, UP, NEC)
Industry (CCCI, PCCI)
NGO (PPDHRRA, GOLD PHIDDRA)

USAID SO4 Projects

Coastal Resource Management Project
Forest Resource Management Project

Chemonics IISE Team

Chemonics International, Inc.

Subcontractors

ECODIT
Environmental Resource Management, Inc.
EnviroNet, Inc.
Resource Management International, Inc.
R.M. Towill Corporation
Schema Konsult, Inc.
The GREEN Group

Institutional Partner Organizations

Asian Institute of Management
Center for Research and Communication Foundation, Inc.
Development Academy of the Philippines
Joseph Slavin & Associates
Philippine Business for Social Progress
Philippine Business for the Environment
Pollution Control Association of the Philippines

Executive Summary

The model proposed to be used for the measurement of pollution reduction in the Philippines under the Industrial Initiatives for a Sustainable Environment (IISE) project has been developed by Millennium Science & Engineering (MSE). The approach used by the model is based on the relative environmental risk of an industrial process in comparison to alternatives. This ensures that all the environmental pollution pathways are considered, implementing multi-media pollution reduction. The model measures Potential Environmental Impact (PEI) of the output streams of the process.

A fundamental task of the project is to conduct in-plant P2/CP assessments. To accomplish the project's pollution reduction goal, a "baseline" must be established at each facility that documents the current hazardous waste streams. These data and information will be gathered by teams of appropriately trained personnel including those familiar with the processes being evaluated and P2 engineers, at a minimum. After gathering facility information, the P2 engineer will evaluate the data, establish the pollution baseline, and prepare an "alternatives evaluation." Following implementation of P2/CP alternatives, the updated potential risk would be compared to the baseline level.

The model developed for this project is the Risk Reduction Measurement Model (R2M2). The model is based on earlier work performed by the US Environmental Protection Agency (US EPA). This earlier work, the Waste Reduction (WAR) algorithm, examines all the waste streams of a process for targeted chemicals, and quantifies the risk based on the chemicals present and mass loading of each chemical. Risk is quantified for the following categories:

1. Global warming potential,
2. Acid rain potential,
3. Photochemical oxidation potential,
4. Ozone depletion potential,
5. Aquatic toxicity potential,
6. Terrestrial toxicity potential,
7. Human toxicity potential by ingestion, and
8. Human toxicity potential by inhalation or dermal exposure.

One modification made to the WAR algorithm is the inclusion of an additional parameter, β, which introduces the probability to the calculation of potential environmental impact. The parameter β is used to account for the reduction of risk of release of chemicals to the environment. This parameter would be used, for example, where exposure to the worker is reduced by the implementation of the workers wearing PPE or better waste management practices (i.e., an example of implementation of principles of "environmental management systems or EMS) that would lessen the probability of release to an environmental medium.

R2M2 is proposed to be used for the evaluation of processes. In instances where the resources are not available to perform a complete risk reduction approach using R2M2, or the process does not contain targeted chemicals in any of the waste streams, a second model, the Mass Tracking Model (MTM), is proposed for used. This model would simply track reduction in waste stream loading of a gross parameter or a specific chemical.

The following conclusions are presented with respect to P2/CP measurement model development:

1. The IISE Project assumes that environmental risk is an appropriate parameter for measuring P2/CP progress.
2. Reduction of environmental risk can be quantified in a relative sense by comparing baseline risk to the risk determined following implementation of P2 alternatives. The proposed methodology for measurement is based on research conducted by the US EPA.
3. US EPA's "WAR" algorithm is suitable for use in the IISE project and can be enhanced by incorporating a probability factor. The proposed R2M2 algorithm allows the user to insert a coefficient that reduces the calculated potential environmental impact for cases in which probability of environmental impact is reduced.
4. Not all of P2/CP assessments will use the R2M2. Where IISE-targeted chemicals are not present, a waste loading model, MTM, will be used.

The following recommendations are proposed for the next steps in the P2/CP portion of the IISE project:

1. The IISE team should develop consensus with project stakeholders on using the R2M2/MTM approach for the P2/CP assessment task. MSE should be authorized to meet with USEPA within the next month to review MSE's approach and obtain EPA' support.
2. The R2M2 conceptual model should be fully developed into a user-friendly tool that can be used by the P2/CP the IISE team. Specifically, Visual Basic or other commonly available software can be used to write the R2M2 program that walks the user through the P2/CP evaluation process. This task should be authorized by Chemonics International prior to the conduct of further P2/CP training. MSE is prepared to lead the model preparation.
3. MSE should be authorized to further expand the beta table, consulting with the IISE technical team in Cebu.
4. The P2/CP assessment training should be continued by MSE. The training should incorporate general information on P2, R2M2, and MTM. The course should be "hands-on" in the nature allowing participants to walk through the evaluation process for actual IISE project participants.

Table of Contents

page

Executive Summary ..... *i*

Table of Contents ..... *iii*

List of Tables ..... *iv*

List of Figures ..... *iv*

SECTION 1 INTRODUCTION 1-1

1.1 Background 1-1

1.2 Proposed Use of Models 1-1

1.3 Purpose of Report 1-2

1.4 Report Organization 1-2

SECTION 2 RISK REDUCTION MEASUREMENT MODEL 2-1

2.1 Purpose of the Model 2-1

2.2 Description of the WAR Algorithm 2-1

2.3 R2M2 Description 2-3

2.4 R2M2 Inputs 2-4

2.5 Examples of Use of R2M2 2-4

2.5.1 Painting Process 2-4

2.5.2 Kerosene Bath 2-5

SECTION 3 MASS TRACKING MODEL 3-1

3.1 Introduction 3-1

3.2 Description of MTM 3-1

SECTION 4 CONCLUSIONS AND RECOMMENDATIONS 4-1

4.1 Conclusions 4-1

4.2 Recomendations ..... **Error! Bookmark not defined.**

Appendices

A Papers on the WAR Algorithm

B Database Values Used in the WAR Algorithm

C R2M2 Example Calculations

List of Tables

Table		page
1.1	IISE Target Chemicals	1-3
2.1	Description of Parameters Used to Develop Ψ Values	2-7
2.2	Preliminary R2M2 Beta Values	2-8
2.3	Example Calculation: PEI of a Painting Process	2-11
2.4	Example Calculation: PEI of a Kerosene Bath Process	2-12

List of Figures

Figure		page
2.1	Process Flow Diagram	2-6
2.2	R2M2 Logic Diagram	2-9
2.3	R2M2 Baseline Data Collection Flow Sheet	2-10

SECTION 1

INTRODUCTION

1.1 Background

Chemonics was awarded the Municipal Coastal Environmental Initiative (MCEI) contract by the United States Agency for International Development on 24 July 1998. This contract, subsequently renamed IISE (Industrial Initiatives for a Sustainable Environment), will operate in the Visayas and Mindanao regions of the Philippines, with support from the project field headquarters in Manila. To accomplish the objectives of the project, the IISE team will work closely with its partners to create a self-sustaining, multi-stakeholder program that will encourage adoption of environmental management systems and application of pollution prevention / cleaner production (P2/CP) technologies.

A fundamental task of the project is to conduct in-plant P2/CP assessments. The IISE project will result in the conduct of P2/CP assessments at 400 firms and a 20% reduction in pollution. To accomplish this, a "baseline" must be established at each facility that documents the current characteristics and flow of its hazardous waste streams. These data and information will be gathered by teams of appropriately trained personnel including those familiar with the processes being evaluated and P2 engineers, at a minimum. After gathering facility information, the P2 engineer will evaluate the data, establish the pollution baseline, and prepare an "alternatives evaluation." Following implementation of P2/CP alternatives, the updated potential risk would be compared to the baseline level.

1.2 Proposed Use of Models

A proposed method for establishing the baseline and measuring progress was conceptualized. The basic approach is to "measure" the level of potential risk for each chemical appearing in any of a facility's waste streams. Two models are proposed to be utilized. The first model, the Risk Reduction Measurement Model (R2M2), would be used where the waste streams of the process contain IISE-targeted chemicals. All processes would be investigated using the R2M2 unless the waste streams in the process do not contain target chemicals or chemicals likely to be added to the list of targeted compounds. Targeted chemicals are currently those on the Philippines list of 28 chemicals (RP 28) from RA 6969 and the Priority Organic Pollutants (POPs) list. These chemicals are listed in Table 1.1. (Note that tables and figures are located at the end of each section.) Additional chemicals may be added to the target list later as needed to expand the use of the risk reduction model.

8

The second model that is proposed is the Mass Tracking Model (MTM). This model would be used to measure reduction of chemicals contained in waste streams of a process that do not contain targeted chemicals. This model accounts for sheer reduction in mass flow rates of waste streams. The MTM would be used when the process does not contain targeted chemicals in any of the waste streams, or does not contain chemicals likely to be added to the list of targeted chemicals in any of the waste streams.

1.3 Purpose of Report

This report documents how R2M2 will be used as the key P2/CP measurement tool for the IISE project. The algorithm is based on the U.S. Environmental Protection Agency's (EPA) Sustainable Technology Division Office (Cincinnati) research with the Waste Reduction (WAR) algorithm, which is documented in the articles included in Appendix A. Discussions between MSE and the EPA authors, Young and Cabezas, indicated the appropriateness of EPA's WAR algorithm to the IISE project. MSE requested that EPA provide a limited matrix of data used in the WAR algorithm to accommodate the chemicals that will be evaluated in the IISE project. (These data are included in Appendix B).

The R2M2 will be developed by modifying the WAR algorithm to accommodate the objectives of the project. The WAR algorithm includes relative risk values (health and environmental impact categories) for a number of chemicals, including most of the RP 28.

1.4 Report Organization

This report is divided into four sections and appendices. Following this section, Section 2 provides a description of the WAR algorithm and the development of R2M2, along with some examples. A description of the MTM is contained in Section 3. Finally, conclusions and recommendations from this task are included in Section 4.

Appendix A contains copies of articles on the development of the WAR algorithm. Appendix B contains a copy of the database values used to develop the potential environmental impact of each chemical. Appendix C contains calculations used in the examples shown in the report.

Table 1.1—IISE Target Chemicals

Chemical	Category
Aldrin	POPs
Arsenic	RP28
Asbestos	RP28
Benzene	RP28
Beryllium	RP28
Cadmium	RP28
Carbon Tetrachloride	RP28
Chlordane	POPs
Chlorinated Ethers	RP28
Chlorofluorocarbons	RP28
Chloroform	RP28
Chromium	RP28
Cyanide	RP28
DDT	POPs
Dieldrin	POPs
Dioxins	POPs
1,2-Diphenylhydrazine	RP28
Endrin	POPs
Ethylene Dibromide	RP28
Ethylene Oxide	RP28
Furans	POPs
Halons	RP28
Heptachlor	POPs
Hexachlorobenzene	RP28 & POPs
Hexachloroethane	RP28
Lead	RP28
Mercury	RP28
Mirex	RP28 & POPs
Pentachlorophenol	RP28
Phosgene	RP28
Polybrominated Biphenyls	RP28
Polychlorinated Biphenyls (PCBs)	RP28 & POPs
Selenium	RP28
Toxaphene	POPs
Tributyltin	RP28
1,1,1-Trichloroethane	RP28
Vinyl Chloride	RP28

Notes:

RP 28 - Philippines list of 28 chemicals from RA 6969
POPs - Priority Organic Pollutants list

SECTION 2

RISK REDUCTION MEASUREMENT MODEL

2.1 Purpose of the Model

A model is proposed for quantification of pollution-related risk reduction as a function of environmental impact for the chemicals of concern. Use of an algorithm ensures consistent application of the parameters selected for measurement. Given the number of facilities and processes that are to be investigated, consistency in the assignment of relative risk is critical to successful measurement. The model proposed for the IISE P2/CP project is based on the WAR algorithm.2.2 Description of the WAR Algorithm

EPA's WAR algorithm has been designed to evaluate the relationship of competing process alternatives. The WAR algorithm considers input and output streams of a process. Figure 2.1 illustrates typical streams to and from a generic process. For a given process, several input streams (which may be comprised of material in the solid, liquid, or gaseous phase) are used in an effort to generate a product. The process typically also will have several non-product streams (which may be comprised of material in the solid, liquid, or gaseous phase) that result from the process. The portion of the WAR algorithm discussed below deals with the product stream and non-product output streams.

The WAR algorithm was developed primarily for comparison of process alternatives; however, one can apply the concepts of the WAR algorithm to establish an impact baseline and measure improvement over time. The algorithm assumes that each chemical stream entering and exiting a process possesses an inherent property, its so-called "potential environmental impact""PEI". The impact of chemicals found in industrial processes and in their associated waste streams is evaluated for several different impact categories. These include:

1. Global warming potential,
2. Acid rain potential,
3. Photochemical oxidation potential,
4. Ozone depletion potential,
5. Aquatic toxicity potential,
6. Terrestrial toxicity potential,

11

7. Human toxicity potential by ingestion, and
8. Human toxicity potential by inhalation or dermal exposure.

The first four categories represent atmospheric impact categories. The remaining four represent local toxicological impact categories.

The PEIs for input and output streams are evaluated separately. For example, the PEI associated with the output streams of a process is calculated by analyzing each of the waste streams generated from the process. Each of the specific chemicals for each waste stream are evaluated. Based upon the impact category values associated with each chemical, the concentration of the chemical in the waste stream, and the mass flow rate of the waste stream, the PEI is determined for each chemical in each waste stream. The PEI of the process is the sum of the PEI for all the chemicals in all the waste streams of the process.

The PEI for each chemical is based upon a specific score for each of the eight impact categories. Table 2.1 provides the methodology for determining scores for each category. For example, the human toxicity potential by ingestion is based upon the lethal-dose that produced death in 50% of rats by oral ingestion (LD_{50}). The human toxicity potential by inhalation or dermal exposure is based on the time-weighted average of the threshold limit value. Scores for atmospheric categories are based upon the ratio of the chemical's adsorption/release/reaction rate compared to the reaction/release/adsorption rate of a chemical standard.

After the scores for each chemical are determined, they are normalized within each category. Normalization ensures that, on average, the impact potential for different categories will have equivalent values. The normalized values are represented by the parameter Ψ. Ψ is calculated by dividing each chemical score by the average of all the chemical scores within that category. (The database currently contains chemical scores for over 1600 chemicals.) Therefore, it is not the absolute Ψ value for each chemical that is important, but rather, the chemical's Ψ value relative to other chemicals' Ψ values. Without normalization, implicit weighting could be present in the chemical database causing unintentional bias in the calculation of the PEI indexes. Normalizing each category by the average value of entries in that category insures that the average value in that category will be unity. The units of Ψ are potential environmental impact (PEI) per kilogram (kg) of chemical.

The WAR algorithm also allows the user to weigh each of the eight impact categories above in order of importance. This weighting factor, represented by the parameter α, is a value between zero and ten. The parameter α is dimensionless. For purposes of the IISE, α is proposed to have a value of 1 for all categories.

The overall PEI per kg of chemical j, Ψ_j, is calculated using the following equation:

$$\Psi_j = \sum_k \alpha_k \Psi_{jk} \tag{1}$$

where the summation k is taken over all impact categories.

The overall PEI of the process, I_{out}, is given by the following equation:

$$I_{out} = \sum_i I_i^{(out)} = \sum_i \dot{M}_i^{(out)} \sum_j x_{ij} \Psi_j \quad (2)$$

where the summation i and j are taken over all waste streams and chemicals, respectively, $I_i^{(out)}$ is the PEI of waste stream i, $\dot{M}_i^{(out)}$ is the mass flow rate of the waste stream i in units of kg per time, and x_{ij} is the mass fraction of component j in waste stream i. The units of I_{out} are PEI/time. 2.3 R2M2 Description

One of the limitations of the WAR algorithm is that the relative risk or probability of environmental impact is not addressed. For example, consideration is not given between the scenario where a waste stream enters the environment uncontrolled and another where proper waste management practices are in place. The former situation represents a higher risk than the latter. For the IISE project, risk reduction is a key objective for the P2/CP program; progress measurements, therefore, should be a function in terms of risk reduction.

The Risk Reduction Measurement Model is proposed as a useful variation of the WAR algorithm to accommodate the need to account for such risk reduction. A modification to the WAR algorithm for this project incorporates a new parameter accounting for the probability of the waste stream being released to the environment in certain cases. The disposition of the waste stream is important because, for example, the environmental impact of the discharge of a liquid waste stream to the site soil and groundwater is much greater than the impact of the same liquid stream captured in drums and treated in an approved manner or in the future, at an approved treatment facility. Thus, the relative risk posed by PEI in a process can be reduced if a waste stream can be more effectively managed.

The introduction of a risk coefficient, β, is proposed to modify the WAR equation. Incorporation of β modifies the result of the WAR algorithm to yield a term PEI*, which can be called "risk-reduced potential environmental impact." The overall PEI* of a chemical is given by the equation:

$$\Psi_j^* = \sum_k \beta_k \alpha_k \Psi_{jk} \quad (3)$$

The PEI* of the process is calculated using Equation 2. An example of the usefulness of the risk coefficient is illustrated in the case of personnel protective equipment (PPE) that is implemented in a painting process. Appropriate PPE reduces the human toxicity potential by inhalation or dermal exposure; β can be used to distinguish the relative risk of a hazardous solvent and/or metallic pigment in the breathing zone of the worker versus the case where the worker wears PPE. Thus in this case, a β value less than 1 (assumed for PPE usage in that the risk of exposure to the user is reduced) would reduce the net PEI* level. A value of β can be assumed for each relevant environmental impact category.

In general, β would be assigned a value of 1 in the baseline scenario. If a process change (or housekeeping change) is made, the value of β would be adjusted to a value less than 1 as appropriate. The parameter is meant to be more of a "fine tune" adjustment to

PEI*, and is not expected to have as much significance as, for example, those processes where highly toxic chemicals are replaced with those less toxic. Rather, it will serve as a tool to accommodate reduction in risk where changes in housekeeping or disposition of wastes may be the only possible alternatives available at a facility. Preliminary examples of β values are shown in Table 2.2.

The model logic is shown in Figure 2.2. This logic is a necessary preliminary design step prior to construction of the program that will be used to calculate the PEI* of the process. The logic of the model begins by identification of the process. Next, a waste stream and its characteristics, such as mass flow rate and management/disposition of the waste, are identified. The appropriate β value for the disposition/exposure is retrieved. Then, each chemical is identified, and its Ψ values are retrieved. The concentration of the chemical in the waste stream is input, and the PEI* of the chemical is calculated. This is repeated for any additional chemicals. The PEI* value of all chemicals is summed to determine the waste stream PEI*. This procedure is repeated for each waste stream from the process. The PEI* of the waste streams is summed to determine the overall PEI* of the process.

2.4 R2M2 Inputs

PEI* must be calculated for each process in which R2M2 is employed. Each process may be comprised of several waste streams, and several chemicals may be found in each waste stream. Figure 2.3 illustrates the flow logic of identifying all the information inputs required for the algorithm.

After the processes at the facility have been identified and chosen for evaluation in the R2M2, the process must be looked at in detail in an effort to identify all the waste streams in the process and the waste stream flow rates. Each waste stream is then investigated to determine the chemicals in the waste stream and their concentrations. Only chemicals on the target list (or those that are likely to be added to the target list) will be investigated.

2.2 Examples of Use of R2M2

2.2.1 Painting Process

In this first example, a painting process uses a paint containing toluene, 1,2,4-trimethylbenzene, and zinc oxide. All the VOCs in the paint are assumed to act as carriers and volatize to the atmosphere. Output streams for this process are the VOC stream (to the atmosphere) and paint overspray. The amount of paint overspray depends on the efficiency of the paint gun and the experience of the painter. The overspray contains the pigment in the paint.

Table 2.3 shows a summary table of the calculations used in determining the process PEI*. Calculations for determining the percent of each chemical in each of the waste streams is shown in Appendix C. While the concentration of toluene and 1,2,4-trimethylbenzene in the paint is 9 percent and 1 percent, respectfully, the concentrations increase to 19.6 percent and 2.2 percent in the VOC stream. The concentration of zinc

oxide increases from 3 percent in the paint to 5.3 percent in the pigment waste stream.

Similarly, the mass of paint used by the process in a year is 235.8 kg. The mass of the VOC waste stream is 101.4 kg per year, and the mass of the pigment waste stream is 67.2 kg per year. The material applied to the product accounts for the balance of the pigment.

In the baseline case, the values of beta are set to a value of 1. The PEI* of each chemical is calculated, and then the PEI* of all the chemicals in all the waste streams is summed to give the process PEI*. The annual process PEI* for this process is calculated to be 40.

The alternative case utilizes a paint that does not contain any targeted chemicals. Therefore, the PEI* of the alternative is 0, and the PEI* reduction is 100 percent.

2.2.2 Kerosene Bath

Kerosene is often used to keep away insects in furniture manufacturing in the Philippines. Bamboo stock may be submersed in a kerosene bath for preservation. In this example, a 450 gallon bath is used to submerse the bamboo until needed in the process. Currently, the bath is emptied and refilled with kerosene every thirty days. The recommendations to reduce pollution are to cover the bath and ensure it is located out of direct sunlight in effort to reduce evaporative losses. These methods are expected to allow the bath to be emptied and refilled every 40 days. The calculated annual PEI*s of 4,500 and 3,400 for the Baseline and P2 Alternative 1, respectively, are shown in Table 2.4.

The second P2 alternative for this process is for the workers to wear PPE. Wearing of gloves when handling the bath and treated bamboo would reduce the value of β to 0.5. The annual PEI for Alternative 2 is 3,800.

The third alternative is to combine Alternatives 1 and 2. The annual PEI* for Alternative 3 is 2,900. This represents a 36 percent reduction in annual PEI from the baseline case.

Figure 2.1—Process Flow Diagram

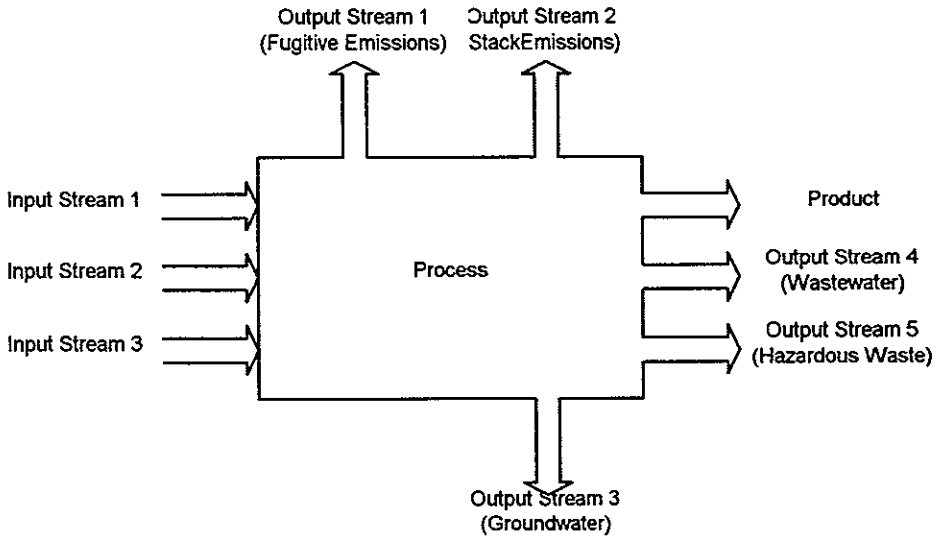

16

Table 2.1—Description of Parameters Used to Develop Ψ Values

Category	Description
Global Warming Potential	Ratio of the extent to which a unit of mass of a chemical adsorbs infrared radiation to the extent that CO_2 adsorbs infrared over a base time frame of 100 years.
Acidification Potential	Ratio of the release of a hydrogen ion in the atmosphere as promoted by a chemical to the rate of release of a hydrogen ion as promoted by SO_2.
Photochemcial Oxidation Potential	Ratio of the rate at which a unit mass of chemical reacts with a hydroxyl radical to the rate at which a unit mass of ethylene reacts with a hydroxyl radical.
Ozone Depletion Potential	Ratio of the rate at which a unit mass of chemical reacts with ozone to form molecular oxygen to the rate at which a unit mass of CFC-11 (trichlorofluoromethane) reacts with ozone to form molecular oxygen. The chemical must contain a chlorine or bromine atom.
Aquatic Toxicity Potential	The inverse of the lethal concentration that produced death in 50% of a representative species of fish.†
Terrestrial Toxicity Potential	The inverse of the lethal-dose that produced death in 50% of rats by oral ingestion.††
Human Toxicity Potential by Ingestion	The inverse of the lethal-dose that produced death in 50% of rats by oral ingestion.††
Human Toxicity Potential by Inhalation or Dermal Exposure	The inverse of the time-weighted average (TWA) of the threshold limit value (TLV).‡

Notes:

† The source of the lethal concentration that produced death in 50% of a representative species of fish, fathead minnows, (LC_{50}) is AQUIRE, ECOSAR, Parger's *Environmental Contaminant Reference Handbook*, 1995, and *Handbook of Environmental Data on Organic Chemicals,* by Karel Verschueren.

†† The source of lethal-dose that produced death in 50% of rats by oral ingestion (LD_{50}) is *Sax's Dangerous Properties of Industrial Materials*, by Richard J. Lewis, 3rd Edition, the *Hazardous Substance Data Bank*, and the *Registry of Toxic Effects of Chemical Substances,* edited by Doris V. Sweet.

‡ The source of the time-weighted average (TWA) of the threshold limit value (TLV) is the Occupational Safety and Health Administration, the American Conference of Governmental Industrial Hygienists, and the National Institute for Occupational Safety and Health.

Table 2.2—Preliminary R2M2 Beta Values

Condition		Impact Category							
		HTPI	HTPE	ATP	TTP	GWP	ODP	PCO	AP
Process Pollution Control									
PPC-1	Replace Paint Booth Water Curtain w/ Dry Filter	1	1	0.5	1	1	1	1	1
PPC-2	Improve Paint Booth Overspray Collection	0.7	0.7	1	0.5	0.9	0.9	0.9	0.9
PPC-3	Combine PPC-1 and PPC-2	0.7	0.7	0.5	0.5	0.9	0.9	0.9	0.9
Waste Management Practices									
WMP-1	Install Secondary Containment	1	0.7	0.5	0.5	1	1	1	1
WMP-2	Install Check Valves on Water Supply System In Vicinity of Process Waste Lines	0.5	0.9	0.9	1	1	1	1	1
WMP-3	Install Pressure Relief Valve on Pressure Vessel	1	0.5	1	1	0.7	0.7	0.7	0.7
Personal Protection Equipment									
PPE-1	Use Appropriate Respirator	1	0.5	1	1	1	1	1	1
PPE-2	Use Appropriate Splash Protection (Boots, Gloves, etc.)	0.7	0.7	1	1	1	1	1	1
General Housekeeping Practices									
GHP-1	Segregate Waste Streams	0.7	0.7	0.7	0.7	0.9	0.9	0.9	0.9
GHP-2	Establish / Implement Waste Handling Procedures	0.9	0.9	0.9	0.9	0.9	0.9	0.9	0.9

otes:

HTPI = Human toxicity potential by ingestion
HTPE = Human toxicity potential by inhalation or demeral exposure
ATP = Aquatic toxicity potential
TTP = Terrestrial toxicity potential (same method as HTPI)
GWP = Global warming potential
ODP = Ozone depletion potential
PCO = Photochemcial oxidation potential
AP = Acid rain potential

Figure 2.2—R2M2 Logic Diagram

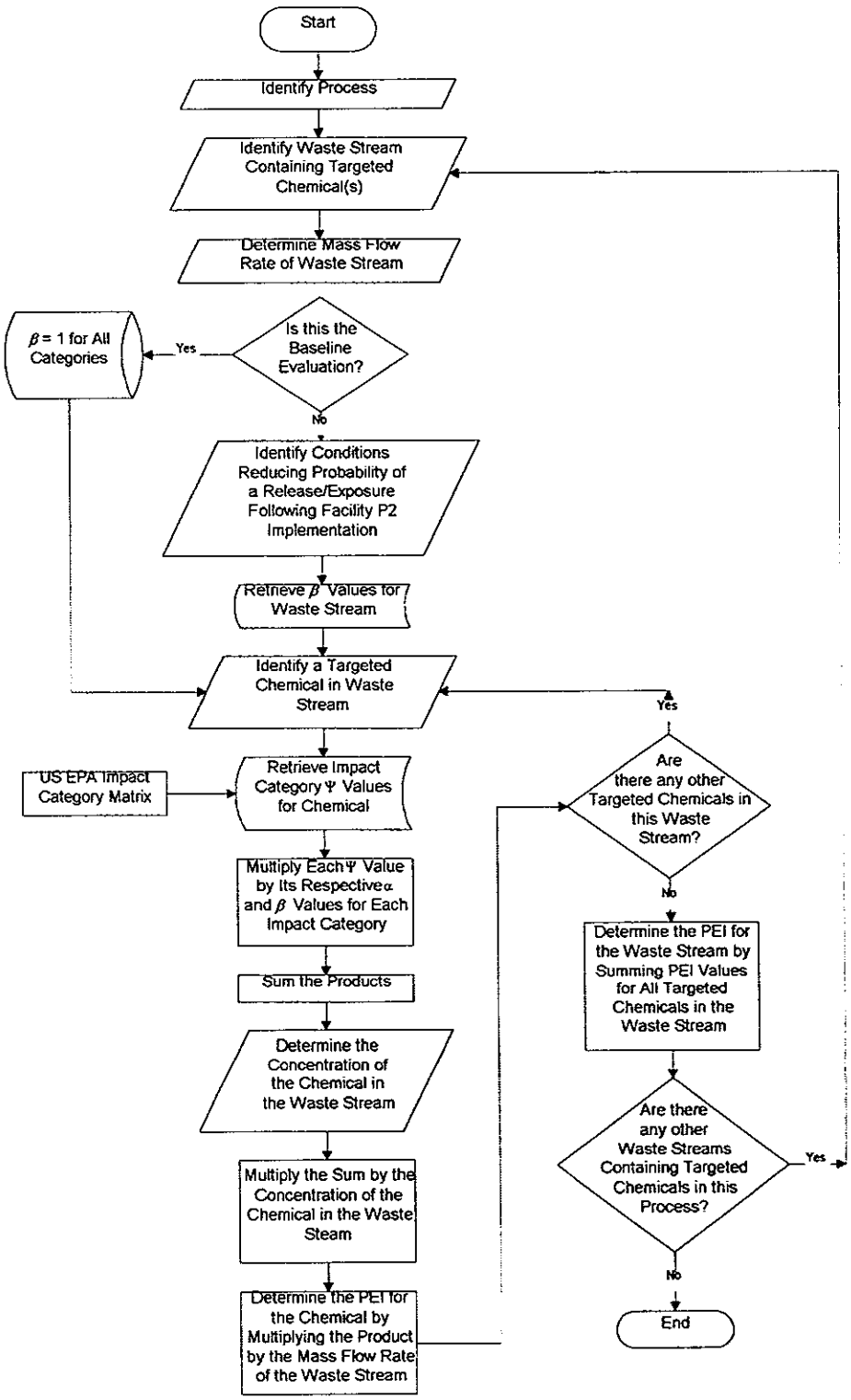

19

Figure 2.3— R2M2 Baseline Data Collection Flow Sheet

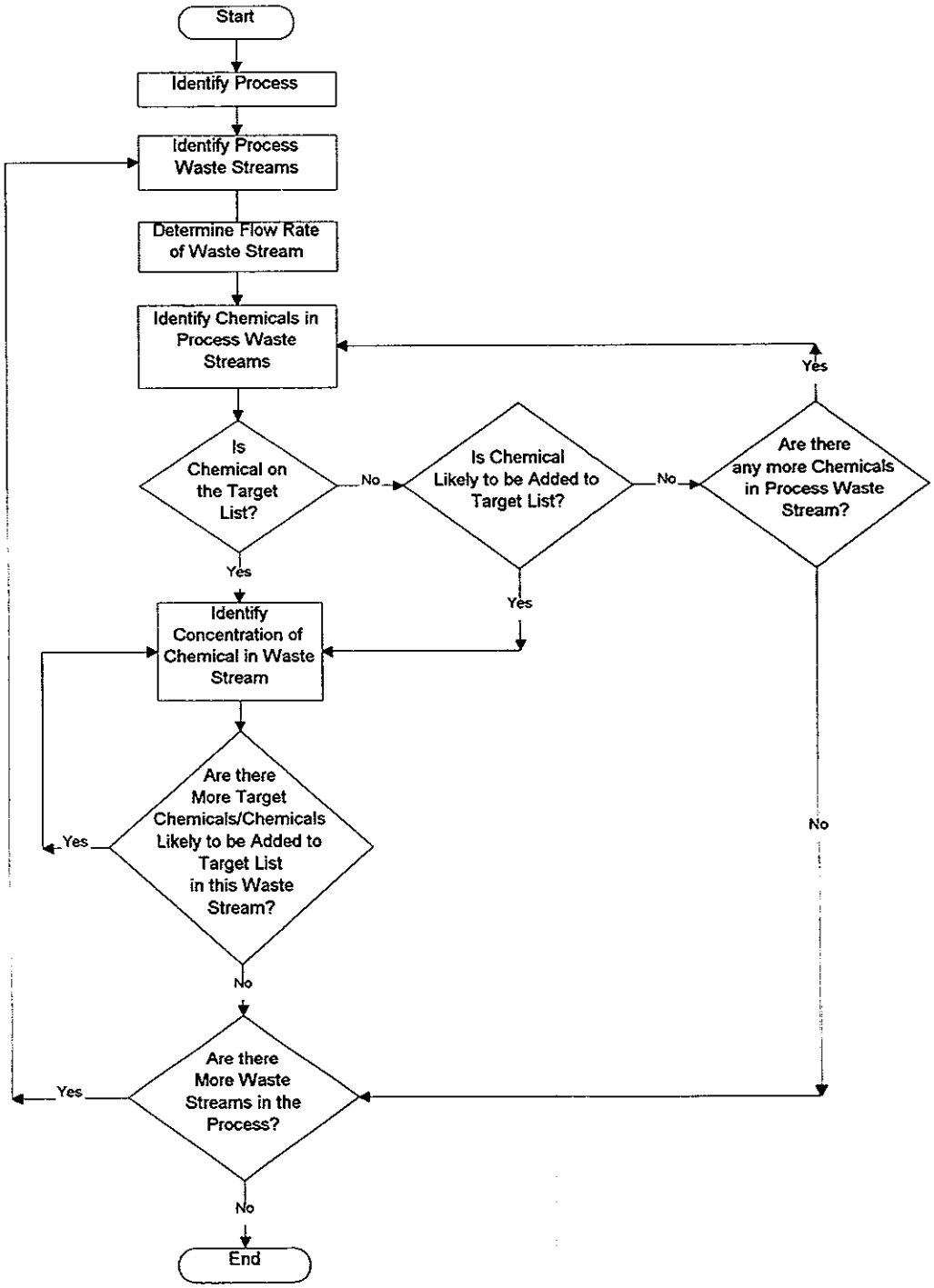

20

Table 2.3—Example Calculation: PEI of a Painting Process

Case	Waste Stream	Chemical	RP28/ POPs	Psi Values (impact/kg chemical) HTPI	HTPE	ATP	TTP	GWP	ODP	PCO	AP	Beta Values (dimensionless) HTPI	HTPE	ATP	TTP	GWP	ODP	PCO	AP	ΣβαΨ (impact/kg chemical	χ (%)	χ ΣβαΨ (impact/kg)	M (kg/year)	PEI (impact/year)
Baseline																								
	VOC	Toluene	n	0.0781	0.0004	0.0645	0.078			1.157		1	1	1	1	1	1	1	1	1.4	19.6%	0.270	101.4	27
	VOC	1,2,4-Trimethylbenzene	n	0.0781	0.0024	0.2863	0.078			2.466		1	1	1	1	1	1	1	1	2.9	2.2%	0.064	101.4	6.5
	Pigment	Zinc Oxide	n	0.7632	0.0591	0.001	0.763					1	1	1	1	1	1	1	1	1.6	5.3%	0.084	67.2	5.6
	Process PEI																							**40**
Alternative: Use of a High Acrylic Coating that does not contain targeted compounds																								
		None																						0
	Process PEI																							0
	PEI Reduction Between Alternative and Baseline																							**100%**

Notes:

HTPI = Human toxicity potential by ingestion
HTPE = Human toxicity potential by inhalation or demeral exposure
ATP = Aquatic toxicity potential
TTP = Terrestrial toxicity potential (same method as HTPI)
GWP = Global warming potential
ODP = Ozone depletion potential
PCO = Photochemcial oxidation potential
AP = Acid rain potential

Table 2.4—Example Calculation: PEI* of a Kerosene Bath Process

Case	Chemical	RP28/ POPs	Psi Values (impact/kg chemical) HTPI	HTPE	ATP	TTP	GWP	ODP	PCO	AP	Beta Values (dimensionless) HTPI	HTPE	ATP	TTP	GWP	ODP	PCO	AP	ΣβαΨ (impact/kg chemical	χ (%)	χ ΣβαΨ (impact/kg)	M (kg/year)	PEI (impact/year)
Baseline																							
	Kerosene	n	0.08	0	0.1	0.08	0	0	0	0	1	1	1	1	1	1	1	1	0.3	99.0%	0.278	16,158	4,499
	Process PEI*																						4,500
Alternative 1: Covering Bath, Moving out of direct Sunlight, extends life of Kerosene and maintains volume such that bath is replaced every 40 days instead of 30 days.																							
	Kerosene	n	0.08	0	0.1	0.08	0	0	0	0	1	1	1	1	1	1	1	1	0.3	99.0%	0.278	12,119	3,374
	Process PEI*																						3,400
Alternative 2: Workers begin wearing PPE (gloves and respirators) when handling material in bath and treated Bamboo stock.																							
	Kerosene	n	0.08	0	0.1	0.08	0	0	0	0	0.5	0.5	1	1	1	1	1	1	0.2	99.0%	0.236	16,158	3,809
	Process PEI*																						3,800
Alternative 3: Combine Alternatives 1 & 2																							
	Kerosene	n	0.08	0	0.1	0.08	0	0	0	0	0.5	0.5	1	1	1	1	1	1	0.2	99.0%	0.236	12,119	2,857
	Process PEI*																						2,900
	PEI Reduction Between Alternative 3 and Baseline																				**PEI Reduction =**		**36%**

Notes:

HTPI = Human toxicity potential by ingestion
HTPE = Human toxicity potential by inhalation or demeral exposure
ATP = Aquatic toxicity potential
TTP = Terrestrial toxicity potential (same method as HTPI)
GWP = Global warming potential
ODP = Ozone depletion potential
PCO = Photochemcial oxidation potential
AP = Acid rain potential

SECTION 3

MASS TRACKING MODEL

3.1 Introduction

The MTM is proposed for tracking pollution reduction for processes where the R2M2 is not used. The MTM can be used to address either a gross parameter, such as biological oxygen demand (BOD), or a specific chemical. As stated in Section 1.2, the MTM would only be used when the process does not contain targeted chemicals in the any of the waste streams, or does not contain any chemicals likely to be added to the list of targeted chemicals in the any of the waste streams. MTM is designed as a less rigorous approach to measuring pollution reduction than R2M2.

3.2 Description of MTM

The MTM is proposed to be used to measure reduction of mass loading of selected a parameter. The concentration of a chemical in the waste stream multiplied by the flow rate would determine the mass loading for that chemical in the wastestream. Summing the mass loading from each waste stream yields the mass loading from the process. Non-chemical specific parameters that could be used for the MTM include BOD, total organic carbon (TOC), and chemical oxygen demand (COD). These chemicals would not generally include IISE-targeted chemicals, since the R2M2 would be utilized for targeted chemicals. Similar to R2M2, a baseline scenario would be established for each process evaluated.

SECTION 4

CONCLUSIONS AND RECOMMENDATIONS

4.1 Conclusions

The following conclusions are presented with respect to P2/CP measurement model development:

1. The IISE Project assumes that environmental risk is an appropriate parameter for measuring P2/CP progress.
2. Reduction of environmental risk can be quantified in a relative sense by comparing baseline risk to the risk determined following implementation of P2 alternatives. The proposed methodology for measurement is based on research conducted by the US EPA.
3. US EPA's "WAR" algorithm is suitable for use in the IISE project and can be enhanced by incorporating a probability factor. The proposed R2M2 algorithm allows the user to insert a coefficient that reduces the calculated potential environmental impact for cases in which probability of environmental impact is reduced.
4. Not all of P2/CP assessments will use the R2M2. Where IISE-targeted chemicals are not present, a waste loading model, MTM, will be used.

4.2 Recommendations

The following recommendations are proposed for the next steps in the P2/CP portion of the IISE project:

[DALE: I CAN'T FIX THE NUMBERS ON THIS AND I'M TOO BURNED OUT (AND NO ONE IS HERE AT THE OFFICE AT THIS HOUR TO HELP). SORRY. DDN

5. The IISE team should develop concensus with project stakeholders on using the R2M2/MTM approach for the P2/CP assessment task. MSE should be authorized to meet with USEPA within the next month to review MSE's approach and obtain EPA'ssupport.
6. The R2M2 conceptual model should be fully developed into a user-friendly tool

that can be used by the P2/CP the IISE team. Specifically, Visual Basic or other commonly available software can be used to write the R2M2 program that walks the user through the P2/CP evaluation process. This task should be authorized by Chemonics International prior to the conduct of further P2/CP training. MSE is prepared to lead the model preparation.

7. MSE should be authorized to further expand the beta table, consulting with the IISE technical team in Cebu.

8. The P2/CP assessment training should be continued by MSE. The training should incorporate general information on P2, R2M2, and MTM. The course should be "hands-on" in the nature allowing participants to walk through the evaluation process for actual IISE project participants.

Appendix A

Using Simulation For Pollution Prevention

Heriberto Cabezas and
Douglas Young
U.S. Environmental
Protection Agency,
Sustainable Technology Div.

The goal is to design or modify chemical processes to minimize their environmental impact

The ability to design or modify chemical processes in a way that minimizes the formation of unwanted byproducts is an going goal for process engineers. o simulation and design methods discussed here: Process Integra- n (PI), developed by El-Halwagi l Manousiouthakis [1] at UCLA, l El-Halwagi [2] at Auburn Univer- ; and the Waste Reduction (WAR) orithm, developed at the U.S. En- onmental Protection Agency ncinnati, Ohio), and made commer- ly available through a Cooperative search and Development Agree- nt (Crada) under the Federal Tech- ogy Transfer Act of 1986.[1]

'I is concerned with improving cess efficiency and keeping tar- ed components from leaving the tem. PI is essentially the practical lication of the mass-exchange net- ks (MEN), as detailed in [1,2], ch try to remove pollutants from duct streams and segregate them concentrated waste streams.

y comparison, the WAR Algorithm concerned with evaluating and re- ing the potential environmental act of a process [3] — a key design sideration. Consider Process A, ch emits 1 ton/h of a given pollu- , and Process B, which emits 2 /h of a different pollutant. When e two processes are compared on basis of pollutant mass alone, one d logically conclude that Process A referable. However, because some utants are more toxic than others, process comparison needs to as- the human-health and environ- tal impacts.

e Process Integration methodology has been ercialized by Matrix Integration, Inc. (Lees- Va.). The initial version of the WAR algorithm ng incorporated into the simulator product CAD IV from Chemstations, Inc. (Houston, The authors' discussion here does not endorse of these commercial products or companies.

For more on simulation, see p. 120

The WAR Algorithm

This methodology assumes that each stream entering and exiting a process possesses an inherent property, its potential environmental impact (PEI). WAR generates four indexes (discussed below), which can be used to compare the environmental impact of various process alternatives. For a steady-state process, one can write a balance equation for PEI:

$$O = \dot{I}_{in} - \dot{I}_{out} + \dot{I}_{gen} \quad (1)$$

where:

$\dot{I}_{in}$ = The rate of PEI input, PEI/h (the impact on the environment if all feed streams were to be released at once)

$\dot{I}_{out}$ = The rate of PEI output, PEI/h, (the impact on the environment if all output streams were to be released)

$\dot{I}_{gen}$ = The rate of PEI generation by the process, PEI/h (the difference between $\dot{I}_{out}$ and $\dot{I}_{in}$; $\dot{I}_{gen}$ can be positive or negative, because a given process can either create or consume PEI)

From Equation 1, one can generate two output indexes and two generation indexes, to compare different process alternatives. The lower the value of these indexes, the better the process's environmental performance.

The *output indexes* include the rate of PEI output, $\dot{I}_{out}$, and the amount of PEI output per kilogram of product, $\hat{I}_{out}$. These indexes allow comparison of the potential impact of various output streams on human health and the environment. $\hat{I}_{out}$ is given by:

$$\hat{I}_{out} = \dot{I}_{out} / \dot{P} \quad (2)$$

where:

$\dot{P}$ = The rate at which the process produces products, kg/h

The *generation indexes* are the rate of PEI generation, $\dot{I}_{gen}$, and the amount of PEI generated per kilogram of product, $\hat{I}_{gen}$. They allow comparison of process alternatives, in terms of the generation of net PEI. $\hat{I}_{gen}$ is given by:

$$\hat{I}_{gen} = \frac{\dot{I}_{out} - \dot{I}_{in}}{\dot{P}} \quad (3)$$

To compute the four indexes for a

NOMENCLATURE

$\dot{I}_{in}$ = The rate of input of PEI, PEI/h

$\dot{I}_{out}$ = The rate of output of PEI, PEI/h

$\dot{I}_{gen}$ = The rate of PEI generation inside the process, PEI/h (i.e., the difference between $\dot{I}_{in}$ and $\dot{I}_{out}$)

$\hat{I}_{out}$ = The amount of PEI output/kg of product

$\dot{P}$ = The rate at which the process produces product, kg/h

$\hat{I}_{gen}$ = The amount of PEI generated/kg of product

$\hat{I}_i^{in}$ = The PEI input per kg of product, for each individual input stream, i

$\dot{I}_i^{in}, \dot{I}_i^{out}$ = The PEI rate of each individual input and output stream, i, PEI/h

$\dot{M}_i^{in}, \dot{M}_i^{out}$ = Mass flowrate of each input and output for each stream, i, kg/h

x_{ij} = The mass fraction of each non-product chemical component, j, in stream i, kg/kg

ψ_j = The overall environmental impact of chemical component, j, PEI/kg

α_k = A weighting factor that allows one to assign relative importance to each of the eight environmental-impact categories, k, used by the WAR Algorithm

ψ_{jk}^{*} = Specific impact of chemical component, j, in impact category, k, PEI/h

given process, the rate of PEI of all the input and output streams, $\dot{I}_{in}$ and $\dot{I}_{out}$, respectively, must be calculated. For the input streams, this is done by calculating the PEI rate of each individual input stream, i ($\dot{I}_i^{(in)}$), and then adding the individual values to get $\dot{I}_{in}$. For the output streams, this is done by calculating the PEI rate of each individual input stream, i ($\dot{I}_i^{(out)}$), and then adding them to get $\dot{I}_{out}$. For each stream, i, the PEI rates of the individual input and output streams are calculated from the following:

- The mass flowrate of each input and output, $\dot{M}_i^{(in)}$ and $\dot{M}_i^{(out)}$, respectively
- The stream composition, in terms of the mass fraction, x_{ij}, of each non-product chemical component (pollutant and undesired byproduct), j
- The overall environmental impact, ψ_j, of chemical component j

The overall environmental impact, ψ_j, is calculated by summing the specific impacts, ψ^s_{jk}, of chemical component j over the various impact category k (discussed below), in units of PEI/kg. This is given by,

$$\dot{I}_{in} = \sum_i \dot{I}_i^{(in)} = \sum_i \dot{M}_i^{(in)} \sum_j x_{ij}\psi_j = \sum_i \dot{M}_i^{(in)} \sum_j x_{ij} \sum_k \alpha_k \psi^s_{jk} \quad (4)$$

$$\dot{I}_{out} = \sum_i \dot{I}_i^{(out)} = \sum_i \dot{M}_i^{(out)} \sum_j x_{ij}\psi_j = \sum_i \dot{M}_i^{(out)} \sum_j x_{ij} \sum_k \alpha_k \psi^s_{jk} \quad (5)$$

where:

α_k = A weighting factor for each impact category k

GOING TO 'WAR' FOR A 'GREENER' ACRYLIC-ACID PROCESS

To illustrate the use of the WAR Algorithm, consider an acrylic-acid-production process designed to produce 50,000 m.t./yr of acrylic acid (Figure 1). The process catalytically oxidizes propylene with air to form acrylic acid, and several byproducts (acetic acid, hydrogen, water and carbon dioxide) [4]. Three alternative design scenarios were considered: a base case (Unit 300) and two alternative designs (Units 301 and 302).

In the base case (Unit 300), the reactor operates at 310°C. The effluent is quenched in an adiabatic flash drum with a substantial recycle stream (98%). The flash-drum vapor effluent is stripped with deionized water to recover any residual acrylic acid.

The vapor effluent from the stripper is delivered to an incinerator. The liquid effluent from the flash drum is mixed with liquid effluent from the stripper; 98% of this mixed stream is recycled to the flash drum for quenching. The non-recycled, liquid effluent is sent to a liquid-liquid extraction unit, where the organics are extracted with a solvent mixture of diisopropyl ether (DIPE; 87 mol%) and water.

The aqueous effluent, which contains small amounts of acetic acid, acrylic acid and DIPE, is distilled to recover pure water, which is considered a waste (since it is not deionized, it cannot be reused in the process). The acids and DIPE are recycled back to the extraction column. The organic effluent from the extraction tower is sent to solvent-recovery column and then to an acrylic-acid distillation column. The final acrylic acid product is 99.9 mol% pure.

In this design, there is no consumption of DIPE. Rather, the initial charge of DIPE is completely recovered within the process.

Acrylic acid is considered the only product in this case study. With the objective of minimizing the potential environmental impact (PEI) of the other three effluent streams and maximizing acrylic acid production, possible improvements were sought. Because the reactor waste gas contains unreacted propylene and byproduct carbon dioxide, the reactor operation was examined.

Seeking improvements

The kinetics of this process are such that lower temperatures favor acrylic acid production. Thus, in the first design alternative, Unit 301, the reactor temperature was reduced by 30°C, to 280°C. This design also incorporated a 54% increase in the reflux ratio of the acrylic acid column. Decreasing the reactor temperature resulted in an equivalent conversion of propylene. However, it produced a greater selectivity toward acrylic acid (from 1.58 to 2.31 mole of acrylic acid per mole of byproduct).

In the second design alternative, Unit 302, the reactor temperature was reduced by another 20°C, to 260°C, and the reactor volume was doubled to maintain an equivalent level of propylene conversion. The reflux ratio in the acrylic acid column was also increased; however, only a 9% increase was required to achieve the same separation as observed in Unit 301.

The four output and generation PEI indexes described above were plotted for the base case and for the the two process modifications. Figure 2 shows the output indexes, $\dot{I}_{out}$ and $\dot{I}_{out,i}$, and the generation indexes, $\dot{I}_{gen}$ and $\dot{I}_{gen,i}$.

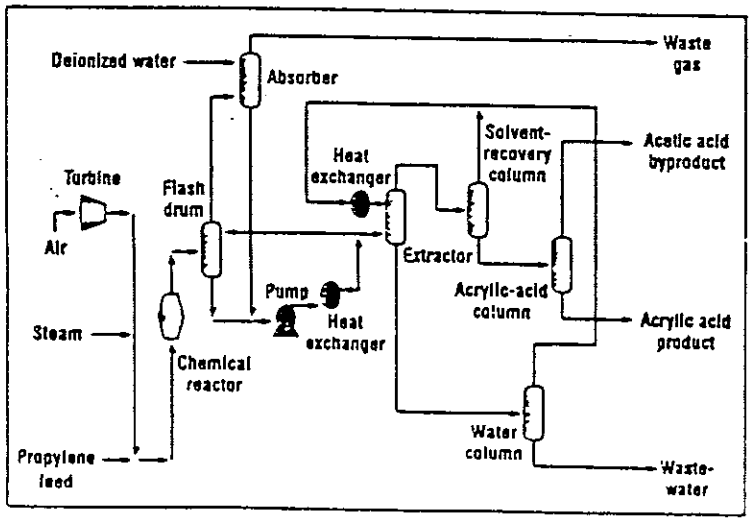

FIGURE 1. The WAR Algorithm was used to identify several waste-

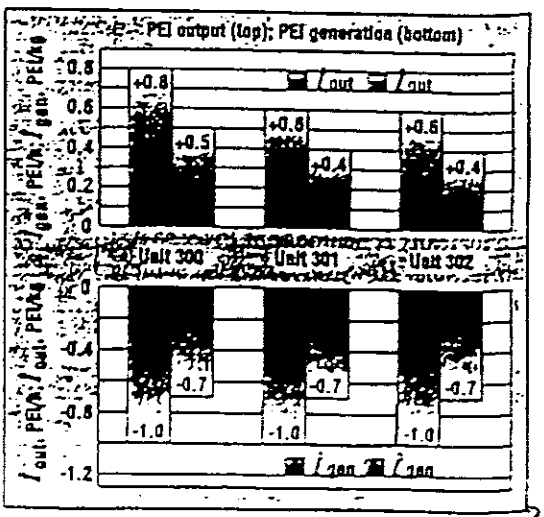

FIGURE 2. The design changes discussed above

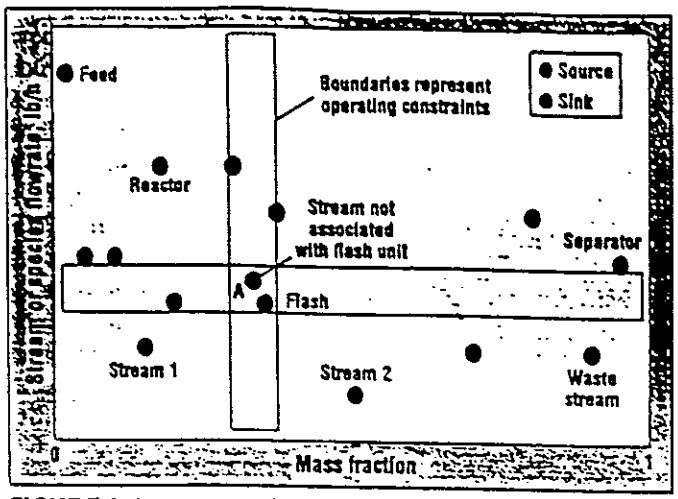

FIGURE 3. In a source-sink diagram, the mass fraction of the target species is plotted against flowrate. As shown, Stream A can be recycled directly back to the flash unit

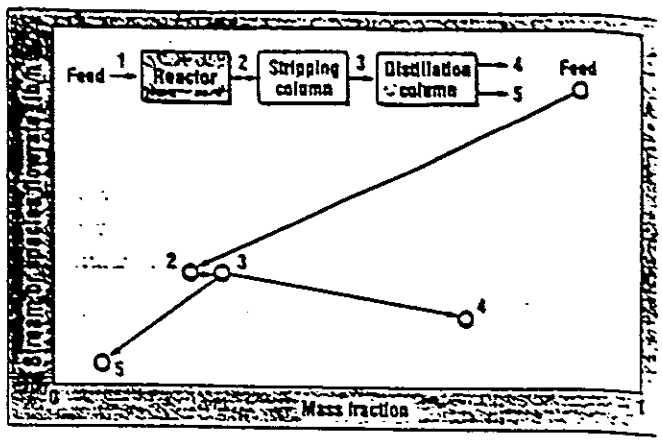

FIGURE 4. As this species-path diagram shows, streams (such as Streams 3 and 4) with a high target-species composi- tion, a high flowrate, or both, are generally the most econom cal candidates for a mass-exchange operation. Stream 2 is al- ready undergoing such an operation (stripping)

The current version of the WAR Algorithm considers eight health- and environmental-impact categories, k: ozone-depletion potential; global-warming potential; acid-rain potential; photochemical-oxidation or smog-formation potential; human-toxicity potential by ingestion; human-toxicity potential by inhalation or dermal exposure; aquatic-toxicity potential; terrestrial-toxicity potential. The weighting factor, α_k, allows us to assign relative importance to each of the eight categories. A default value of 5 for α_k can be assumed, but it can be adjusted between 0 and 10 to better represent the process and locale.

Values for ψ^s_{jk} can be obtained from a database developed by the authors, or from the database within the ChemCAD IV chemical-process simulator. The Box on p. 118 shows how the WAR Algorithm improved an acrylic-acid process.

Process Integration

The PI methodology considers the intricate relationships among flow streams, unit operations, operating parameters, and performance requirements, and then uses these relationships during process design to determine the ideal order of the unit operations and mass and energy streams; to calculate mass and energy balances for proper equipment sizing; and to optimize an existing process, increasing product flow, or reduce energy use and waste generation.

The Mass-Exchange Network (MEN), at the heart of the Process Integration simulation methodology, reduces the amount of waste generated in a process by concentrating the non-useful byproducts into waste streams, and capturing and recycling products and useful byproducts back to appropriate downstream unit operations. A MEN allows a designer to simulate any process design to determine what unit operations, if any, are needed. The analysis or optimization of a series of MENs can be performed numerically or graphically; the graphical technique is demonstrated below.

Components of MENs

In a mass-exchange network, the waste streams are referred to as *sources* and unit operations, including reactors, distillation columns and treatment units, are referred to as *sinks*. In a given process, various output streams, and any waste- or mass-separating agents, can be either emitted, recycled back to a unit operation (sink), recycled to a processing stream, or sent for post-treatment.

The mass-transfer and separation portions of a MEN typically rely on mass-exchange equipment — including absorbers, strippers, liquid-liquid extraction units, adsorbers, ion exchangers and leaching systems — which separate and concentrate the waste streams. Mass-separating agents (MSA) — including solvents used in liquid-liquid extraction or gas absorption, granulated activated carbon, ion-exchange resins, and gases used in stripping operations — are often added to enhance the recovery of the useful components.

MENs also use stream-manage ment techniques, such as recycling t a sink, stream mixing to achieve a de sired flowrate or composition, an stream segregation to avoid mixing c streams that would require furthe treatment downstream. Temperature pressure and flowrate can also be ac justed to enhance performance.

Analysis of MENs

The first step in designing an MEN that will simulate a process is to de fine the problem to be solved — how t increase production rates, reduce po lution emission, reduce utility con sumption (such as cooling water) an so on — and to list any associated con straints, such as product specifica tions, pollutant concentrations c flowrates, and so on. The next step to define the target components - those chemicals that need to be ident fied to address the problem statemen and constraints. For example, wate would be a target component in a sys tem where you are trying to reduc cooling-water consumption; hydroge would be a target component in a de hydrogenation process where the goa is to trim gas emissions. The graphica tools used in the MEN analysis focu around these components.

The *source-sink diagram* (Figur 3) plots the composition of the ta get species (shown as mass frac tion) against flowrate to identify re cycle opportunities. The red circle represent all sources or stream and describe the relationship be tween flowrate and the composition

of the target species in that stream.

The current operating condition of each sink (unit operation) is shown by a blue circle. The values plotted in Figure 3 represent the flowrate through the sink versus the composition of the target species inside that sink. For sinks that have variable concentrations, an average composition is shown. A source-sink diagram can be drawn for each target species.

Each sink has physical constraints that limit the compositions and flowrates within which it can operate. These are shown as box-like boundaries in Figure 3. These constraints limit the feasible operating conditions that may be considered during simulation in a "greener" design alternative. Any source that lies within this box can be recycled back to any sink within the box. While Figure 3 only highlights one sink, such a graphical analysis should be done for each sink.

A source-sink diagram can also be used to identify streams that can be combined and then recycled. For instance, in Figure 3, combining Streams 1 and 2 will increase the flowrate to an appropriate level, and adjust the composition to an acceptable level, allowing the combined stream to be recycled back to the flash unit sink shown within the box.

Similarly, if a source lies to the right of a sink but is still within its flowrate constraints, the stream can be recycled back to that sink — but only after the target-species composition has been reduced to meet the unit's constraints. The composition can be altered by using a stripper, absorber, or other mass-exchange unit.

The distance that a source lies to the right of a sink also provides information as to which units can be used to accomplish the desired degree of separation. A source that lies above a sink must reduce its flowrate before it can be recycled to that sink.

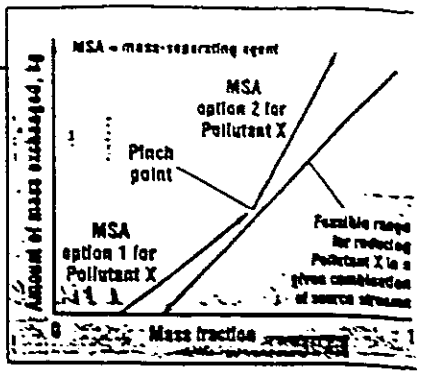

FIGURE 5. In this mass-pinch diagrar the curves on the left show the ability c two different mass-separating agents (MSA) in a given mass-exchange unit tc remove Pollutant X from a given waste stream or streams. The composite curv on the right shows the range of feasibil for removing Pollutant X from a combir tion of streams. The pinch point (where the two curves are closest) shows the best point at which to apply the MSA o tions for removing Pollutant X, from an economic and thermodynamic standpo

Another graphical tool, the *path c agram* (Figure 4), shows the flow of specific component (i.e., a process r actant) through a process. Such a di gram is used to determine where ma exchange could be used to capture tl target species and remove them fro the system.

We Made A Long Story -

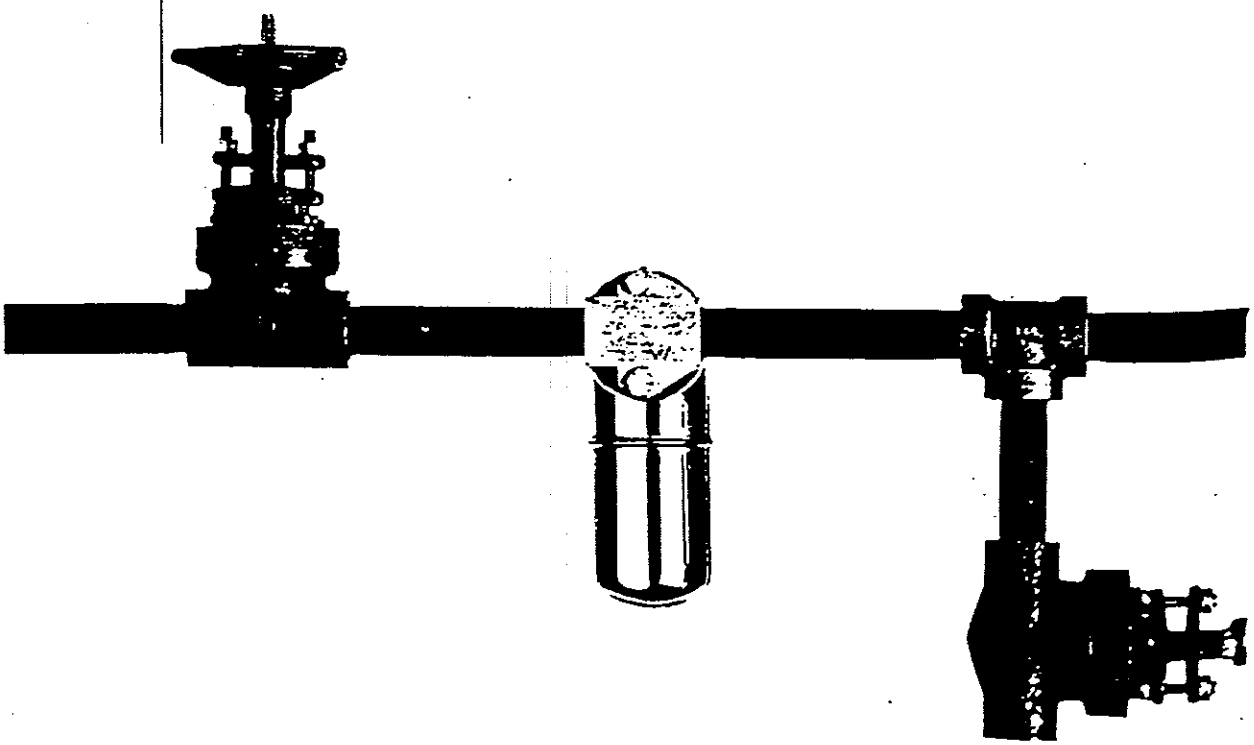

Figure 4 shows a section of a hypothetical process design, and only hows the streams that contain the arget species. The arrows represent he flow. More than one arrow arising rom a single source represents the eparation of the stream into multiple streams, and implies that the target species is in each. Multiple arrows nto a single source means several lows are feeding a mixer or reactor.

In general, streams with higher target-species compositions or higher flowrates — such as Streams 3 and 4 in Figure 4 — are the most-cost-effective candidates for mass exchange or stream-management techniques.

When the goal is to reduce the concentration of a target species (i.e., Pollutant X) from a source (waste) stream or streams using a mass-exchange system, a *mass-pinch diagram* (Figure 5) can be used to evaluate the options. While construction of such a diagram is beyond the scope of this article, a discussion of Figure 5 may be illustrative. In that figure, the curves on the left show the feasibility ranges for two different MSAs (in terms of the amount of Pollutant X each can remove). The curve on the right shows the feasible range over which Pollutant X can be reduced in a given combination of source streams. The pinch point, where the two curves are closest, is the most cost-effective, thermodynamically desirable point at which to apply mass exchange. ■

Edited by Suzanne Shelley

References

1. El-Halwagi, M.M., and Manousiouthakis, V., Synthesis of mass exchange networks, *AIChE Journal*, Vol. 35, pp. 1233-1244, 1989.
2. El-Halwagi, M.M., "Pollution Prevention Through Process Integration," Academic Press, San Diego, Calif., 1997.
3. Cabezas, H., Bare, J.C., and Mallick, S.K., Pollution prevention with chemical process simulators: The generalized Waste Reduction (WAR) Algorithm," *Comp. Che. Eng.*, Vol. 21, pp. S305-S310, 1997.
4. Turton, R., et al., "Analysis, Synthesis, and Design of Chemical Processes," Prentice-Hall, Upper Saddle River, N.J., 1998.

Authors

Heriberto Cabezas is a chemical engineer at the U.S. Environmental Protection Agency, where he leads the Simulation and Design Team at the National Risk Management Research Laboratory in the Sustainable Technology Division (EPA, 26 W. Martin Luther King Dr., Cincinnati, OH 45268; Phone: 513-569-7350; Fax: 513-569-7111; E-mail: cabezas.heriberto@epamail.epa.gov). He holds a Ph.D. from the University of Florida, an M.S. from the University of Florida, and a B.S. from the N.J. Inst. of Technology, all in chemical engineering.

Douglas M. Young is a chemical engineer at the U.S. Environmental Protection Agency. He works at the National Risk Management Research Laboratory in the Sustainable Technology Division (EPA, 26 W. Martin Luther King Dr., Cincinnati, OH 45268; Phone: 513-569-7624; Fax: 513-569-7111; E-mail: young.douglas@epamail.epa.gov). He holds a Ph.D. from the University of Arizona, an M.S. from the University of Notre Dame, and a B.S. from the University of Michigan, all three in chemical engineering.

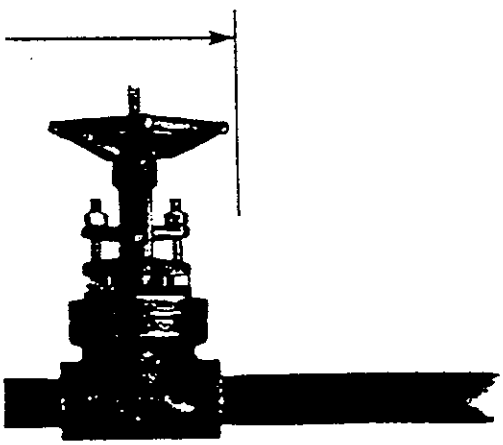

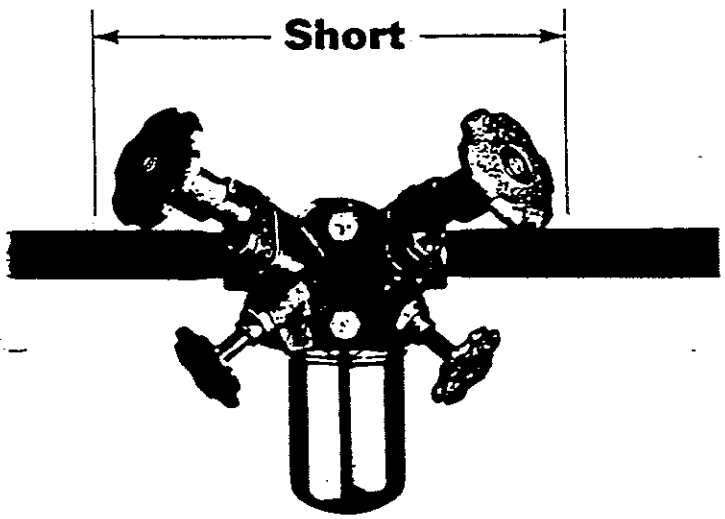

roducing the remarkable stainless steel
ıp Valve Station. It integrates a steam trap
l valves in one simple unit to reduce costs
energy, installation and maintenance. Same
iable inverted bucket...with a few new twists.

it our web site at www.armstrong-intl.com
download the TVS catalog or to learn more
out the complete Armstrong product line.

Armstrong

Armstrong International, Inc.
Three Rivers, Michigan 49093, USA
(616) 273-1415 Fax: (616) 278-6555
Liege, Belgium (04) 2409090 Fax: (04) 2481361
www.armstrong-intl.com

Computers & Chemical Engineering, in press.

Pollution Prevention with Chemical Process Simulators: The Generalized Waste Reduction (WAR) Algorithm-Full Version

Heriberto Cabezas*, Jane C. Bare, and Subir K. Mallick†

U.S. Environmental Protection Agency, National Risk Management Research Laboratory
Sustainable Technology Division, Systems Analysis Branch
26 West Martin Luther King Drive, Cincinnati, Ohio 45268, USA

Abstract - A general theory for the flow and the generation of potential environmental impact through a chemical process has been developed. The theory defines six potential environmental impact indexes that characterize the generation of potential impact within a process, and the output of potential impact from a process. The indexes are used to quantify pollution reduction and to develop pollution reducing changes to process flow sheets using process simulators. The potential environmental impacts are calculated from stream mass flow rates, stream composition, and a relative potential environmental impact score for each chemical present. The chemical impact scores include a comprehensive set of nine effects ranging from ozone depletion potential to human toxicity and ecotoxicity. The resulting Waste Reduction methodology or WAR Algorithm is illustrated with two case studies using the chemical process simulator Chemcad III (Use does not imply USEPA endorsement or approval of Chemcad III).

INTRODUCTION

There is currently a great deal of interest in the development of methods that can be used to prevent or at least minimize the generation of pollution; and there are numerous efforts underway in this area (Lederman and Weber, 1991; El-Halwagi, *et al.* 1992; Fonyo, *et al.*, 1994; Rossiter, 1995; Manousiouthakis and Allen, 1995; Mallick *et al.*, 1996). This interest stems from the belief that pollution prevention is likely to lead to the creation of technologies that have a much more benign impact on human health and the environment. Because this technology is inherently less polluting, it is likely to be more robust and economical than simply adding pollution control devices to conventional designs. In chemical manufacturing, these pollution prevention methods take the form of an effort to design process plants that generate as little pollution as possible. Since chemical process simulators are widely used in the design and operation of chemical manufacturing plants, the development of a pollution prevention methodology for chemical process simulators is likely to have a significant impact on the pollution generated by the chemical industry. At the National Risk Management Research Laboratory, research efforts are underway to develop a methodology for commercial chemical process simulators. The research effort is called the WAste Reduction or WAR Algorithm after Hilaly and Sikdar (1994) who performed some of the early work in this area.

This paper presents a generalization of the WAR Algorithm, discusses the methodology for evaluating potential environmental impacts, and illustrates the use of the method in the design or modification of chemical processes with two case studies.

* Corresponding author; Fax: 513-569-7111; E-mail: cabezas.heriberto@epamail.epa.gov

† Post Doctoral Research Fellow, Oak Ridge Institute for Science and Education; Present Address: Simulation Sciences, Inc., 601 South Valencia Avenue, Area

ENVIRONMENTAL IMPACT THEORY

Potential environmental impact is the unrealized effect or impact that the emission of mass and energy would have on the environment on average. It is, therefore, essentially a probability function for the realization of a potential effect. Thus, the potential environmental impacts of chemical manufacturing processes are generally caused by the energy and material that the process takes from or emits to the environment. Potential environmental impact is a conceptual quantity that can not be directly measured, *i.e.*, there are no potential environmental impact meters. However, one can calculate potential environmental impact from related measurable quantities using functional relations between the two. This situation is common in science and engineering. For example, the energy of a fluid can not be directly measured, but it can be calculated from temperature and pressure by the use of heat capacities and equations of state. Exactly how to perform a calculation for potential environmental impacts will be discussed later in this paper.

Conservation Equation

Traditionally, chemical process design has been based on the creative application of mass and energy balances along with thermodynamics, chemical reaction engineering, and engineering economics. Our methodology proposes to add a conservation relation over potential environmental impact to the aforementioned two balance equations. The conservation equation for impacts is based on an accounting of the flow of potential environmental impact in and out of the processes. This flow of impact is related

to the mass and energy flows but it is not equivalent to them. The impact conservation equation is

$$\frac{dI_{syst}}{dt} = \dot{I}_{in} - \dot{I}_{out} + \dot{I}_{gen} \qquad (1)$$

where I_{syst} is the potential environmental impact content inside a process, $\dot{I}_{in}$ is the input rate of impact, $\dot{I}_{out}$ is the output rate of impact, and $\dot{I}_{gen}$ is the rate at which impact is generated in the system by chemical reactions or other means. Note that processes can also consume potential environmental impact so that $\dot{I}_{gen}$ can, in fact, be negative. For steady state processes, the conservation equation reduces to,

$$0 = \dot{I}_{in} - \dot{I}_{out} + \dot{I}_{gen} \qquad (2)$$

which implies that no potential environmental impact accumulates in the system. Also note that Equations (1) and (2) serve as definitions of the function $\dot{I}_{gen}$.

The significance of potential environmental impacts can be better understood by considering the following definitions. If one were to dump into the environment all of the mass and energy flows entering a process, the resulting impact on the environment would equal to I_{in}; if one were to also dump into the environment all of the mass and energy flows exiting a process the resulting impact on the environment would be equal to I_{out}. However, due to chemical transformations and changes in state conditions (temperature and pressure), I_{in} is never exactly equal to I_{out}, and consequently I_{gen} is never exactly equal to zero for steady state processes.

Chemical Processes

Application of either Equation (1) or (2) to chemical manufacturing processes requires an expression that relates the conceptual potential environmental impact to measurable quantities. Potential environmental impacts are caused by energy and material inputs and outputs to or from the environment. But, as a first approach, this treatment is restricted to potential impacts due to material flows while neglecting any impacts due to energy. Effects due to energy flows can be incorporated into the analysis by extending the boundary over which the impact balance is done to include the energy generation process. Effects due to resource depletion are also neglected mainly because there is no effective methodology for measuring them. This is consistent with the focus of this work which is the chemical process plant rather than a global life-cycle type of analysis. The expression relating potential chemical environmental impacts to measurables is

$$\dot{I}_i = \sum_j \dot{I}_j^{(i)} = \sum_j \dot{M}_j^{(i)} \sum_k x_{kj}\psi_j + \cdots \qquad (3)$$

where the sum over j is taken over the streams of input i or output i, the sum over k is taken over all chemicals k, $\dot{I}_i$ is the rate of potential environmental impact either in (i=in) or out of the process (i=out), $\dot{I}_j^{(i)}$ is the rate of potential environmental impact for stream j which may be an input or an output, $\dot{M}_j^{(i)}$ is the mass flow rate of stream j which may again be either an input or an output, x_{kj} is the mass fraction of chemical k in stream j, and ψ_j is the

Note that Equation (3) is a first order approximation that does not include the synergistic effects that can occur when multiple chemicals are present.

Impact Indexes

For steady state processes one can use Equation (2) to define two categories of indexes for the environmental impact of chemical manufacturing. The first category of indexes measures the generation of potential environmental impact within processes, and the second one measures the potential environmental impact emitted by processes. There are various indexes that can be defined within each category. However, only the six indexes, three from each category, that seem most useful for waste reduction will be treated here.

Following Hilaly and Sikdar (1994), all non-products are considered to be pollutants and the potential environmental impact of all products is set to zero, *i.e.*, ψ_j=0 for all products j. These assumptions are consistent with the objective of this paper which is to present a methodology for waste reduction, *i.e.*, the primary concern is reducing the impact and the amount of the non-products. The broader implications of Equation (1), including other impact indexes for which $\psi_j \neq 0$ for products j and further conjectures on the implications for sustainability, will the subject of future publications.

The first index of the first category of indexes (impact generation) is obtained by solving Equation (2) for $\dot{I}_{gen}$ and adding the superscript NP for Non-Products to give,

$$\dot{I}_{gen}^{NP} = \dot{I}_{out}^{NP} - \dot{I}_{in}^{NP} \qquad (4)$$

where $\dot{I}_{out}^{NP}$ and $\dot{I}_{in}^{NP}$ are the potential environmental impacts due to non-products, *i.e.*, pollutants in the outputs and inputs, respectively. Equation (3) is used to give explicit expressions for $\dot{I}_{out}^{NP}$ and $\dot{I}_{in}^{NP}$ where all components, products and non-products, are included in the summation, but where ψ_j=0 for all products j which effectively removes all products from the summation. The index, $\dot{I}_{gen}^{NP}$, measures the total rate at which the process generates potential environmental impact due to non-products (NP). $\dot{I}_{gen}^{NP}$ has units of potential environmental impact generated per time.

The second index, $\hat{I}_{gen}^{NP}$, of the first category is obtained by dividing Equation (4) by the rate at which the process generates products to give a specific impact generation,

$$\hat{I}_{gen}^{NP} = \frac{\dot{I}_{gen}^{NP}}{\sum_p \dot{P}_p} = \frac{\dot{I}_{out}^{NP} - \dot{I}_{in}^{NP}}{\sum_p \dot{P}_p} \qquad (5)$$

where the sum over p is taken over all the products p, and $\dot{P}_p$ is the mass flowrate of product p. $\hat{I}_{gen}^{NP}$ measures the potential impact created by all non-products in manufacturing a unit mass of all the products p. The index, $\hat{I}_{gen}^{NP}$, has units of potential environmental impact per mass of products.

The third index of the first category, $\tilde{M}_{gen}^{NP}$, is obtained from Equation (5) by setting the potential environmental impact (ψ_j) of all products to zero and that of all non-products to one. This has the effect of assigning the same potential environmental impact to all non-products. The

process, *i.e.*, it gives the ratio of mass converted to an undesirable form to mass converted to a desirable form. The expression for $\hat{M}_{gen}^{NP}$ is

$$\hat{M}_{gen}^{NP} = \frac{\sum_j \dot{M}_j^{(out)} \sum_k x_{kj}^{NP} - \sum_j \dot{M}_j^{(in)} \sum_k x_{kj}^{NP}}{\sum_p \dot{P}_p} \quad (6)$$

where the summation over $\dot{M}_j^{(out)}$ is taken only over output streams, the summation over $\dot{M}_j^{(in)}$ is taken only over input streams, and the summation over x_{kj}^{NP} is taken only over all non-products k in stream j. The units of $\hat{M}_{gen}^{NP}$ are mass of non-products per mass of products.

The first index of the second category of indexes (impact emission) $\dot{I}_{out}^{NP}$ is simply the total rate of potential environmental impact output due to non-products. $\dot{I}_{out}^{NP}$ is calculated from Equation (3) subject to ψ_j=0 for all products j. The index, $\dot{I}_{out}^{NP}$, is a measure of the rate at which the process emits potential environmental impact, and it has units of potential environmental impact per time.

The second index of the second category, $\hat{I}_{out}^{NP}$, is obtained by dividing the rate of potential environmental impact output due to non-products by the output rate of products to give,

$$\hat{I}_{out}^{NP} = \dot{I}_{out}^{NP} \Big/ \sum_p \dot{P}_p \quad (7)$$

The index, $\hat{I}_{out}^{NP}$, has units of potential environmental impact per mass of products. This expression gives the pollution index Φ of Mallick *et al.* (1996) which measures the potential environmental impact emitted in manufacturing a unit mass of products.

The third index of the second category, $\hat{M}_{out}^{NP}$, is obtained from Equation (7) by setting the potential environmental impact (ψ_j) of all products to zero and that of all non-products to one. The resulting expression is,

$$\hat{M}_{out}^{NP} = \frac{\sum_j \dot{M}_j^{(out)} \sum_k x_{kj}^{NP}}{\sum_p \dot{P}_p} \quad (8)$$

which is related to the pollution index ϕ_n of Hilaly and Sikdar (1994) by,

$$\hat{M}_{out}^{NP} = \sum_n \phi_n \quad (9)$$

where the summation is taken over all products n. $\hat{M}_{out}^{NP}$ measures the amount of non-product or pollutant mass emitted in manufacturing a unit mass of products, and it has units of non-product mass per mass of products. It is also a mass inefficiency measure.

Significance of Impact Indexes

The first category of indexes, *e.g.*, $\dot{I}_{gen}^{NP}$, $\hat{I}_{gen}^{NP}$, and $\hat{M}_{gen}^{NP}$, characterize some aspects of the generation of potential environmental impact within a manufacturing process. They are most useful in addressing questions related to the internal environmental efficiency of the process plant, *i.e.*, the ability of the plant to produce desired products while new potential environmental impact is created, resources such as potentially costly remediation efforts will likely be required to prevent the potential impact from being realized. Obviously, the smaller the values of $\dot{I}_{gen}^{NP}$, $\hat{I}_{gen}^{NP}$, and $\hat{M}_{gen}^{NP}$ the more environmentally efficient the process, and, all others factors such as economics being equal, the more desirable. $\dot{I}_{gen}^{NP}$ would be useful in comparing different designs on an absolute basis, while $\hat{I}_{gen}^{NP}$ and $\hat{M}_{gen}^{NP}$ would be useful in comparing different designs independently of manufacturing plant size.

The second category of indexes, *e.g.*, $\dot{I}_{out}^{NP}$, $\hat{I}_{out}^{NP}$, and $\hat{M}_{out}^{NP}$ characterize some aspects of the emission of potential environmental impact from a manufacturing process. Their principal use is in addressing questions related to the external environmental efficiency of the process plant, *i.e.*, the ability of the plant to produce desired products while inflicting on the environment a minimum of undesired potential environmental impact. It is again obvious that the smaller the values of $\dot{I}_{out}^{NP}$, $\hat{I}_{out}^{NP}$, and $\hat{M}_{out}^{NP}$ the more environmentally efficient the process, and all other factors such as economics being equal, the more desirable it is. Since $\dot{I}_{out}^{NP}$ is a total rate of impact output, it could be useful in deciding whether a given plant is compatible with a particular site. For example, it would be unwise to locate a plant with a high $\dot{I}_{out}^{NP}$ in an ecologically sensitive area. $\dot{I}_{out}^{NP}$ could also be used in matching the size of a plant to the capacity of the surrounding environment to dissipate environmental impact. $\hat{I}_{out}^{NP}$ and $\hat{M}_{out}^{NP}$ are more useful in comparing the potential environmental impact of alternative processes independently of plant size.

CHEMICAL ENVIRONMENTAL IMPACT

Application of the methodology so far developed requires that the potential environmental impacts of chemicals be estimated. Further, it is required that a relative impact number ψ_j be given for each chemical j over a wide range of different chemical environmental impacts. This is, unfortunately, not a trivial matter because chemical impacts are measured on different relative scales that can not be simply added without some form of normalization.

Chemical Impact Expression

To apply the WAR methodology to chemical processes, the following expression for ψ_j has been developed (Mallick *et al.*, 1996),

$$\psi_j = \sum_l \alpha_l \psi_{j,l}^s \quad (10)$$

where the sum is taken over categories of potential chemical environmental impacts, e.g., ozone depletion potential, human health, etc. listed below under *Classification of Impacts*. α_l is a relative weighting factor for impact of type l independent of chemical j, and $\psi_{j,l}^s$ is the specific potential environmental impact of chemical j for an impact of type l. α_l has units of potential environmental impact per mass.

The relative weighting factor α_l allows Equation (10) to be customized to specific or local conditions. The suggested procedure is to initially set all the α_l's to same value of say one, and to allow users to vary individual

Please note that for a relative comparison, the absolute value is not critical. For example, photochemical oxidation potential would be weighted more heavily than other impacts in an area that suffers from smog. There is an effort underway in our research group to develop more sophisticated methods of determining values for the α_j's. The values for the $\psi^s_{j,i}$ were obtained from the relative rankings or scores for chemicals by normalizing according to,

$$\psi^s_{i,j} = \frac{(Score)_{i,j}}{\langle (Score)_i \rangle_j + 2\sigma_j} \qquad (11)$$

where $(Score)_{i,j}$ is the relative score of chemical i on some arbitrary scale within impact category j, $\langle (Score)_i \rangle_j$ is the arithmetic average of the scores of all chemicals i within impact category j, and σ_j is the standard deviation of all the chemical scores in impact category j. The normalizing factor $\langle (Score)_i \rangle_j + 2\sigma_j$ assures that about 75% of the normalized chemical score numbers $\psi^s_{j,i}$ will be between 0 and 1 irrespective of the statistical distribution of the initial scores as expected from Chebyshev's theorem (Lapin, 1975). If the chemical scores happen to follow a normal distribution, then the normalization range extends to approximately 95% of the scores.

Classification of Impacts

The classification of chemical environmental impacts and the values for the $(Score)_{i,j}$ were adopted from the study of Heijungs *et al.* (1992)* and normalized according to Equation (11) to obtain the $\psi^s_{j,i}$'s. In the calculation of $\langle (Score)_i \rangle_j$ and σ_j, the chemical scores for dioxin, chromium VI, and vinyl chloride were excluded. The reason is that the score numbers for these three chemicals were several orders of magnitude higher that those for all other chemicals, and including them in the normalization process would have made the normalization meaningless. Therefore, the normalized $\psi^s_{j,i}$ for these three chemicals would appear as outliers which they, in fact, are.

Table 1: Normalized Chemical Impact Scores

	H2	MEK	SBA	H2O
$\psi^s_{j,i}$	0	0.42	4.1E-4	0
	N2	Ar	CH4	NH3
$\psi^s_{j,i}$	0	0	7.4E-3	0.93

There are nine different impact categories. These can be subdivided into four environmental physical potential effects (acidification, greenhouse enhancement, ozone depletion, and photochemical oxidant formation), three human toxicity effects (air, water, and soil), and two ecotoxicity effects (aquatic and terrestrial).

The normalized chemical scores used in the two case studies presented in the next sections are given in Table 1 above where H2 is hydrogen, MEK is methyl ethyl ketone, SBA is secondary butyl alcohol, H2O is water, N2 is molecular nitrogen, Ar is argon, CH4 is methane, and NH3 is ammonia. These acronyms will be used throughout the rest of the paper.

CASE STUDY #1: MEK PRODUCTION

To illustrate the use of the generalized WAR Algorithm, a case study from the production of methyl ethyl ketone (MEK) from secondary butyl alcohol (SBA) is presented. The case study was adopted from the Chemcad III (Chemstations, Inc.) chemical process simulator, and all the material and energy balances were performed using Chemcad III. However, any commercial process simulator could have been used. This case study presents a typical chemical engineering process for the production of a commodity chemical that involves several unit processes such as reactors, separators, mixers, dividers, and heat exchangers. It is, therefore, sufficiently complex to illustrate the WAR Algorithm but still treatable within the space of this paper. Essentially, the chemical process consists of a SBA dehydrogenation reactor followed by a MEK purification train and associated equipment.

Base Flowsheet

Figure 1 shows the base process flow diagram for the production of MEK from SBA. SBA is fed to a hydrogen scrubber where the feed SBA scrubs residual MEK from the hydrogen stream. The SBA feed is then pumped up to reaction pressure and heated to reaction temperature with a heat exchanger and a heater. The heated SBA is fed to the reactor where the chemical transformation occurs. The

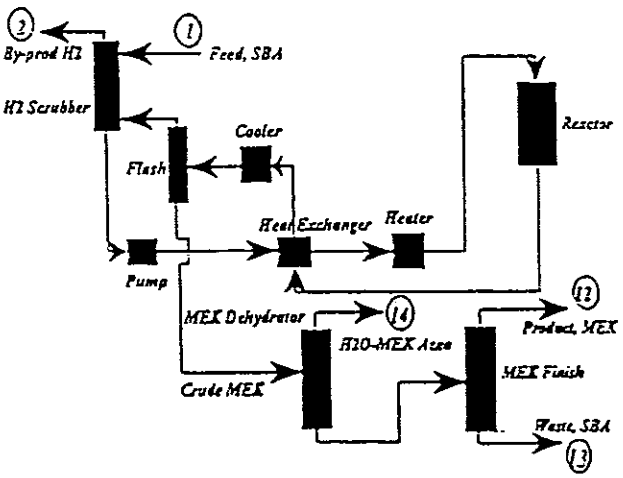

Figure 1. Base process flow diagram for the production of methyl ethyl ketone from secondary butyl alcohol.

Table 2: MEK Production Flow Summary (kg/hr)
Input & Output: Base Process

Stream (State)	# 1 (L)	# 2 (G)	# 12 (L)	# 13 (L)	# 14 (G)
SBA	3362	19	3	2670	1
MEK	0	0	567	13	71
H2O	8	0	0	0	8

reactor output stream is sent to a heat exchanger where it is partially condensed. The mixture of MEK, hydrogen, and unconverted SBA is cooled further and sent to a separator where the hydrogen is flashed off. The hydrogen is then scrubbed and the liquid phase fed to a MEK purification system. The mass flow rates and the state of the various input and output streams as calculated by Chemcad III are listed in Table 2 above.

Modified Flowsheet

Examination of the base process indicates that waste stream 13 contains large amounts of unreacted SBA and small amounts of MEK. It is, therefore, logical to try to recover the SBA and MEK as the first step in a waste reduction strategy. Consequently, the process flow diagram was modified by the addition of a recycle from

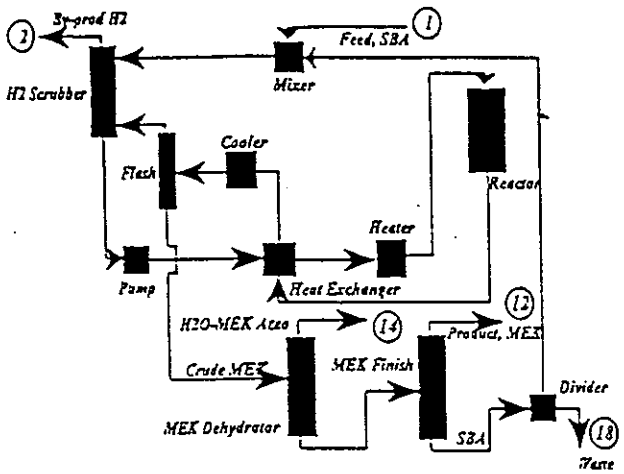

Figure 2. Modified process flow diagram for the production of methyl ethyl ketone from secondary butyl alcohol.

stream 13 to the feed, stream 1. Two cases were studied with this modification, recycling 50% and 100% of stream 13. Recycling 100% of stream 13, *i.e.*, closing off stream 18, is appropriate for this illustration. But, it is clearly not practical because stream 18 is the only liquid waste stream in the modified process and the only means of purging the system of liquid impurities. Without this purge, impurities would build up inside the process causing it to eventually cease to function. Figure 2 above shows the flow diagram for the modified process. The mass flow rates and the state of the various input and output streams for the modified process with 50% recycle are listed in Table 3

Table 3: MEK Production Flow Summary (kg/hr)
Input & Output: Modified Process (50% Recycle)

Stream (State)	# 1 (L)	# 2 (G)	# 12 (L)	# 14 (G)	# 18 (L)
SBA	3362	168	5	1	2124
MEK	0	1	980	64	10
H2O	8	2	0	6	0
H2	0	29	0	0	0

The process modification increased the amount of product by approximately 73% while reducing the amount of waste SBA in stream 18 by about 20%.

It is important to note that an examination of Tables 2, 3, and 4 will indicate that waste was generally reduced, and that environmental impact was probably also reduced. However, the information so far considered is not sufficient to allow a quantitative comparison of the overall waste and environmental impact reduction associated with each of the three cases studied here. For this comparison one must calculate the impact indexes already described. For the modified process with 100% recycle, the mass flow rates and the state of the various input and output streams are listed in Table 4 below. Note that increasing the recycle increased the amount of product by 269% while simultaneously reducing the amount of waste SBA in stream 13 to zero.

Table 4: MEK Production Flow Summary (kg/hr)
Input & Output: Modified Process (100% Recycle)

Stream (State)	# 1 (L)	# 2 (G)	# 12 (L)	# 14 (G)
SBA	3362	1117	11	1
MEK	0	11	2094	59
H2O	8	3	0	5
H2	0	60	0	0

Impact Index Calculations

Six different impact indexes were calculated for the base case and the two modified processes each. The indexes were obtained using Equations (3) to (8), the flow rates from Tables 2, 3, and 4, Equation (10), and the normalized chemical impact scores of Table 1. The relative weighting factors, α_i, were all set to one for these calculations.

The first category indexes, *i.e.*, the impact generation indexes, $\dot{I}_{gen}^{NP}$, $\hat{I}_{gen}^{NP}$, and $\hat{M}_{gen}^{NP}$, are shown on Figure 3 below. It should be noted that $\hat{M}_{gen}^{NP}$ is a negative number since some of the input mass is always converted to product, and the products are not included in the summation of the outputs. The specific indexes, $\hat{I}_{gen}^{NP}$ and $\hat{M}_{gen}^{NP}$, were multiplied by a factor of 100 so that they could be shown on the same scale as the rate index $\dot{I}_{gen}^{NP}$.

The second category indexes, *i.e.*, the impact output indexes $\dot{I}_{out}^{NP}$, $\hat{I}_{out}^{NP}$, and $\hat{M}_{out}^{NP}$, are shown in Figure 4. The specific index $\hat{I}_{out}^{NP}$ was multiplied by a factor of 1000, and the specific index $\hat{M}_{out}^{NP}$ was multiplied by a factor of 10 so that they could both be shown on the same scale as $\dot{I}_{out}^{NP}$.

The largest source of uncertainty in the calculation of the impact indexes is the environmental impact scores. These measurements are probably accurate to no more than one significant figure or an order of magnitude. It is, therefore, prudent to assume that impact index calculations are also accurate to no more than one significant figure. Two significant figures are used in Figures 3 and 4 in order to help the readers to reproduce

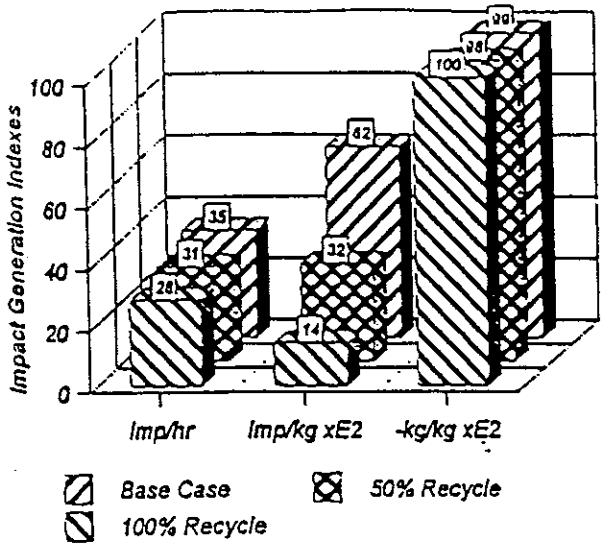

Figure 3. Impact generation indexes for the production of methyl ethyl ketone from secondary butyl alcohol: $\dot{I}_{gen}^{NP}$ in impact units per hour, $\hat{I}_{gen}^{NP}$ in impact units per kilogram of product, and $-\hat{M}_{gen}^{NP}$ in kilograms of pollutants per kilogram of product.

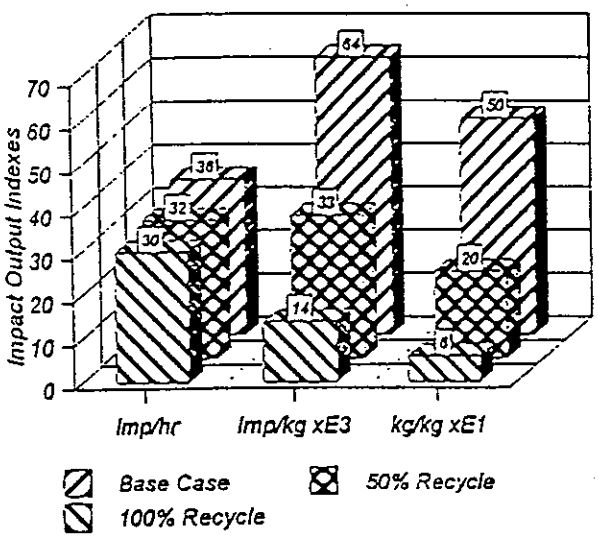

Figure 4. Impact output indexes for the production of methyl ethyl ketone from secondary butyl alcohol: $\dot{I}_{out}^{NP}$ in impact units of pollutants per hour, $\hat{I}_{out}^{NP}$ in impact units of pollutants per kilogram of products, and $\hat{M}_{out}^{NP}$ in kilograms of pollutants per kilogram of products.

DISCUSSION OF CASE STUDY #1

The impact generation indexes of Figure 3 show that: (1) the rate of impact generation by non-products decreases by 13% for 50% recycle and by 20% for 100% recycle, (2) the impact generated by non-products per kilogram of product decreases by 48% for 50% recycle and by 77% for 100% recycle, and (3) the kilograms of non-products generated per kilogram of product remains nearly constant at -100. The most significant index in this case is the impact generated per kilogram of product. The decrease of this index reflects the increase in the productivity of the plant, *i.e.*, the increase in product flow rate.

The impact output indexes of Figure 4 show that: (1) the rate of impact output from non-products decreases by 11% impact output from non-products per kilogram of product decreases by 48% for 50% recycle and by 78% for 100% recycle, and (3) the output of kilograms of non-product per kilogram of product decreases by 60% for 50% recycle and by 88% for 100% recycle. It is worth noting that the output of impact and waste decreased as measured by all the indexes. The most significant index in this case is the impact output per kilogram of product. The decrease in this index is consistent with the decrease in the impact generation per mass of product index discussed in the paragraph above. This decrease is also a reflection of the increased productivity of the plant.

The decreases in the indexes are sufficiently large such that they represent significant reductions in pollution. The consistent decrease in the impact generation per mass of product (48% to 77%) and the impact output per mass of product (48% to 78%), simply means that the modified plant can meet the needs of a much larger market without increasing its generation or its output of potential environmental impact. It also means that a modified plant that is 48% to 77% smaller than the base case can meet the needs of the same market that the base plant was designed for.

CASE STUDY#2: AMMONIA PRODUCTION

To further illustrate the use of the generalized WAR Algorithm, a second case study from the production of ammonia from synthesis gas is presented. The case study was also adopted from the Chemcad III (Chemstations, Inc.) chemical process simulator, and all the material and energy balances were performed using Chemcad III. However, any commercial process simulator could again have been used. Just as Case Study #1, this case study also presents a typical chemical engineering process that involves several unit processes such as reactors, separators, mixers, dividers, and heat exchangers. It is also sufficiently complex to illustrate the WAR algorithm but still treatable within the space of this paper.

Base Flowsheet

Figure 5 shows the base process flow diagram for the process. Essentially, the overall process is based on the reaction of nitrogen and hydrogen to produce ammonia. The mixture of hydrogen and nitrogen is compressed and

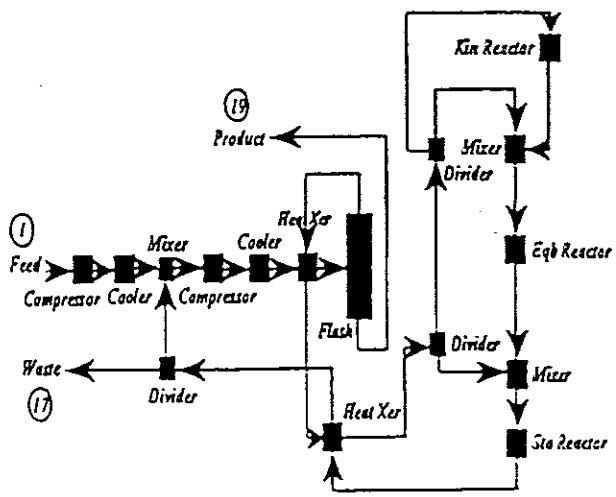

Figure 5. Base process flow diagram for the production

cooled and feed to a series of three reactors through a flash drum. Several reactors are normally used the to maximize the conversion of feed to products which for this process is difficult to do. This flash drum also serves to separate the ammonia product from the unreacted gases which are feed back into the system. The ammonia is recovered as an anhydrous liquid under modest pressure. The mass flow rates and the state of the input and output streams as calculated by Chemcad III are all listed in Table 5.

Table 5: Ammonia Production Flow Summary (kg/hr)
Input & Output: Base Process (Purge Ratio = 0.1)

Stream (State)	# 1 (G)	#17 (G)	# 19 (L)
N2	33,334	5060	187
Ar	603	428	176
H2	7196	1120	13
CH4	805	700	112
NH3	0	3696	30453

Modified Flowsheet

Examination of the base process indicates that waste stream 17 contains ammonia and some unreacted feed. It is, therefore, logical to try to recover the ammonia and the unreacted feed as an obvious first step in a waste reduction strategy. Consequently, the process flow diagram was modified in two ways. First, the purge ratio was reduced five fold from 0.1 to 0.02, *i.e.*, the flow of stream 17 was reduced five fold. Second, in addition to reducing the purge, a flash drum was added with stream 17 as the feed to recover some of the ammonia.

Table 6: Ammonia Production Flow Summary (kg/hr)
Input & Output: Modified Process (Purge Ratio = 0.02)

Stream (State)	# 1 (G)	#17 (G)	# 19 (L)
N2	33,334	1162	217
Ar	603	199	404
H2	7196	281	16
CH4	805	446	351
NH3	0	856	38001

Figure 5 shows the configuration of the flow diagram for the reduced purge modified process which is identical to that of the base process. The mass flow rates and the state of the input and output streams for the reduced purge modified process are listed in Table 6. The process modification increased the amount of product by approximately 25% while reducing the amount of waste ammonia in stream 17 by about 77%. It is worth noting present in the product stream. This changed from about 2% impurities in the base case to 3% for the reduced purge modified case.

Figure 6 shows the flow diagram for the modified process with reduced purge and addition of a flash drum with stream 17 as the feed. Under this configuration, stream 25 is used to purge impurities from the system. Without this purge, impurities would again build up inside the process, and it would eventually cease to function. Stream 24 which consists of essentially pure ammonia is mixed with stream 19 to form a new product stream, stream 26.

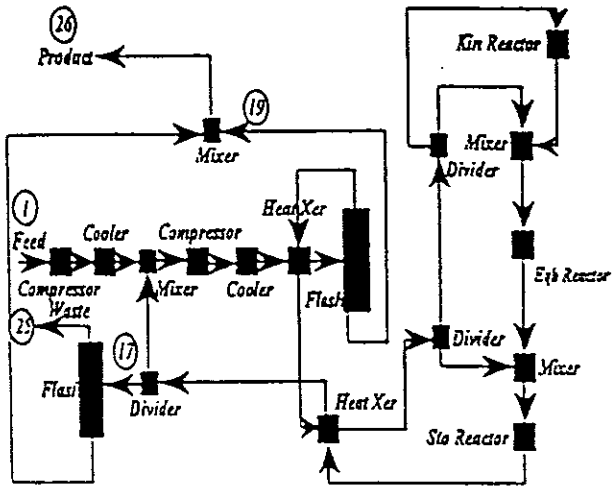

Figure 6. Modified process flow diagram for the production of ammonia from synthesis gas with reduced purge ratio and added flash drum.

The mass flow rates and the state of the various input and output streams are listed in Table 7. Note that adding the flash drum in addition to reducing the purge five fold increased the amount of product by 26% as compared to the base case. This is very close to the 25% increase in product that was obtained by simply reducing the purge. However, the amount of waste ammonia in stream 25 was reduced by 91%, and the amount of total waste in stream 25 was reduced by 78%, both compared to the base case. As compared to the reduced purge process, the addition of the flash drum increased the amount of product by a meager 1%, but it reduced the amount of waste ammonia by 61% and total amount of waste by 18%, both in stream 25. Therefore, the principal effect of adding the flash drum was the reduction of waste.

Table 7: Ammonia Production Flow Summary (kg/hr)
Input & Output: Modified Process
(Purge Ratio = 0.02 & Flash Drum)

Stream (State)	# 1 (G)	#25 (G)	# 26 (L)
N2	33,334	1162	217
Ar	603	199	404
H2	7196	281	16
CH4	805	447	351
NH3	0	335	38,521

An examination of Tables 5, 6, and 7 will again show that waste was generally reduced, that the amount of product made was increased, and that environmental impact of the process was probably also reduced. However, one finds that it is not sufficient to allow a quantitative comparison of the overall waste and environmental impact associated with each of the three cases. In a simple example such this one the task is confusing, but for complex chemical process it can become impossible. For this comparison one must calculate the impact indexes.

Impact Index Calculations

Again, six different impact indexes were calculated for the base and the two modified processes. The indexes were also obtained using Equations (3) to (8), the flow rates from Tables 5, 6, and 7, Equation (10), and the normalized chemical impact scores of Table 1. The relative weighting factors α_i were all set to one for these calculations.

The first category indexes, *i.e.*, the impact generation indexes, $\dot{I}_{gen}^{NP}$, $\hat{I}_{gen}^{NP}$, and $\hat{M}_{gen}^{NP}$, are shown on Figure 7. It should be noted that $\hat{M}_{gen}^{NP}$ is a negative number since some of the input mass is always converted to product, and the products are not included in the summation of the outputs. The specific index, $\hat{I}_{gen}^{NP}$, was multiplied by a factor of 10,000, and the index, $\hat{M}_{gen}^{NP}$, was multiplied by a factor of 1,000 so that they could both be shown on the same scale as the rate index $\dot{I}_{gen}^{NP}$.

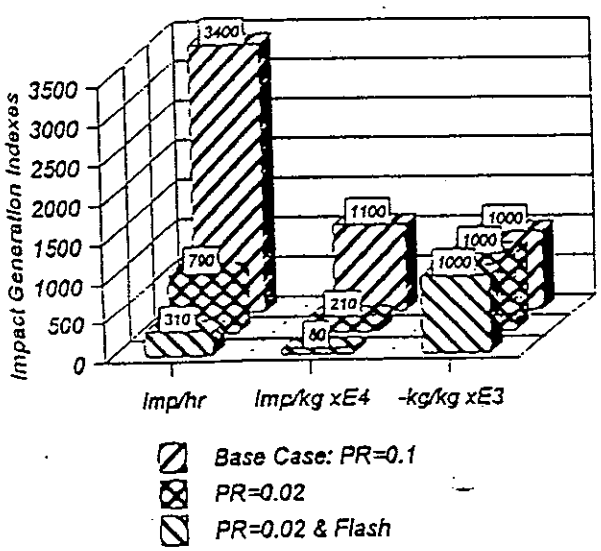

Figure 7. Impact generation indexes for the production of ammonia from synthesis gas: $\dot{I}_{gen}^{NP}$ in impact units per hour, $\hat{I}_{gen}^{NP}$ in impact units per kilogram of product, and $-\hat{M}_{gen}^{NP}$ in kilograms of pollutants per kilogram of product. PR is the purge ratio.

The second category indexes, *i.e.*, the impact output indexes, $\dot{I}_{out}^{NP}$, $\hat{I}_{out}^{NP}$, and $\hat{M}_{out}^{NP}$, are shown in Figure 8. The specific index $\hat{I}_{out}^{NP}$ and the specific index $\hat{M}_{out}^{NP}$ were both multiplied by a factor of 10,000 so that they could be shown on the same scale as $\dot{I}_{out}^{NP}$.

The largest source of uncertainty in the calculation of the impact indexes are again the environmental impact scores. These measurements are probably accurate to no more than one significant figure or an order of magnitude, and calculations are also accurate to no more than one significant figure. Two significant figures are presented in Figures 7 and 8 in order to allow readers to reproduce the calculations if necessary.

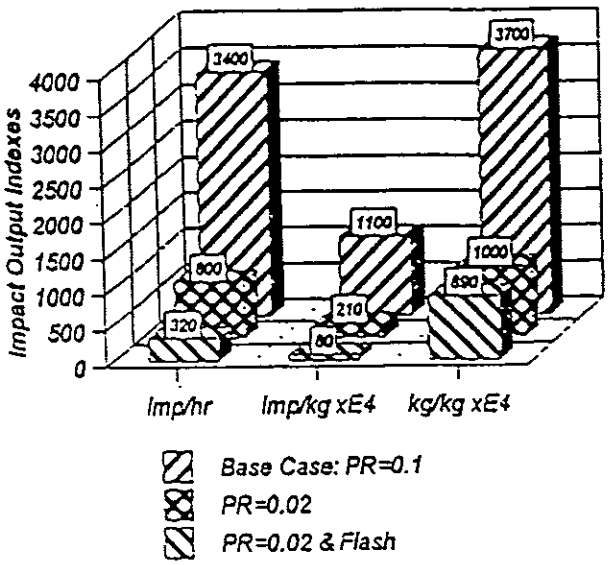

Figure 8. Impact output indexes for the production of ammonia from synthesis gas: $\dot{I}_{out}^{NP}$ in impact units of pollutants per hour, $\hat{I}_{out}^{NP}$ in impact units of pollutants per kilogram of products, and $\hat{M}_{out}^{NP}$ in kilograms of pollutants per kilogram of products. PR is the purge ratio.

DISCUSSION OF CASE STUDY #2

The impact generation indexes of Figure 7 show that: (1) the rate of impact generation by non-products decreases by 77% when the purge ratio is decreased from 0.1 to 0.02 and by 91% when the purge ratio is decreased as above and a flash drum is added to recover waste ammonia, (2) the impact generated by non-products per kilogram of product decreases by 81% when the purge ratio is reduced from 0.1 to 0.05 and by 93% when the purge ratio is decreased as above and a flash drum is added, and (3) the kilograms of non-products generated per kilogram of product remained nearly constant at -1 for all cases. The most significant index in this case is the impact generated per kilogram of product. The decrease of this index reflects primarily the recovery of the waste product and to a smaller extent the increase in the productivity of the plant, *i.e.*, the increase in product flow rate.

The impact output indexes of Figure 8 show that: (1) the rate of impact output from non-products decreases by 76% when the purge ratio is decreased from 0.1 to 0.02 and by 91% when the purge ratio is decreased as above and a flash drum is added to recover waste ammonia, (2) the impact output from non-products per kilogram of product decreases by 81% when the purge ratio is reduced from 0.1 to 0.05 and by 93% when the purge ratio is decreased as above and a flash drum is added, and (3) the output of kilograms of non-product per kilogram of product decreases by 73% when the purge ratio is reduced from 0.1 to 0.05 and by 76% when the purge ratio is decreased as above and a flash drum is added. It is again worth

in this case is the impact output per kilogram of product. The decrease in this index was the same as that for the equivalent generation index. This is a reflection of the change in the index being primarily driven by the recovery of waste product rather than increased productivity.

The decreases in the indexes are again sufficiently large that they represent significant reductions in pollution. The consistent decrease in the impact generation per mass of product and impact output per mass of product (81% to 93%) implies that the modified plant can meet the needs of a moderately larger market with much less impact on the environment. The decrease in the rate of impact generation and impact output (76% to 91%) means that the modified process has an environmental impact that is roughly one tenth that of the base plant. Lastly, the decrease in the output of waste mass per mass of product indicates that the modified plant will lose less valuable material in its operation.

FUTURE WORK

In addition to the topics already mentioned, there are two other issues that need to be further mentioned in relation to the WAR Algorithm: Engineering Economics and Computer Aided Process Design. However, both of these are beyond the scope of this paper which is to present the basic generalized waste reduction or WAR Algorithm and to illustrate its use. Engineering Economics and Computer Aided Process Design are the subject of present and future research, and they are included here only for completeness and to aid interested readers applying the method and furthering the work.

Engineering Economics

Whenever a process is modified to reduce waste, there is a consequent change in the economics associated with it. Economic changes are generally due to: (1) the addition or removal of capital equipment, (2) an increase or decrease in energy consumption, (3) a change in the rate of consumption of feed material, and (4) a change in the rate of product generation. When a process is modified, all of the above are frequently affected. There are well established methods for estimating the economics of chemical processes either manually (Peters and Timmerhous, 1968; Richardson Engineering Services, 1997) or with the aid of a computer (ICARUS, 1997; Aspen Technology, 1997).

Modification of a chemical process using the WAR Algorithm needs to be done along with an evaluation of the economic consequences of any proposed process modifications, *i.e.*, one needs to simultaneously compare both the potential environmental impact and the cost of alternate process flowsheets. The reason is that the ultimate objective is always that of developing cost effective reductions in pollution. Unfortunately, there are no consensus criteria for cost effective waste reduction. Although one possibility, consistent with traditional process design procedures, is to require that the sum of the capital and operating costs should not increase with proposed process modifications from the base configuration. This can be expressed as,

where C_o is the operating cost and C_c is the capital cost that can be estimated by one of the aforementioned methods or some another proprietary method. Equation (12) can then be used jointly with Equations (4) to (8) to evaluate alternative process flowsheets.

Computer Aided Process Design

While it is often possible to devise pollution reducing modifications from an inspection of the process flowsheet, there are many situations where a more systematic approach such as computer aided process design and optimization may be required. This is particularly important with very complex processes that are difficult to analyze by inspection. The WAR Algorithm can be used in computer aided process design and optimization. This can be done by employing the indexes of Equations (4) to (8) as objective functions in a mathematical optimization subject to a cost constraint such as Equation (12). For example, one could minimize the output of potential environmental impact per mass of product given by Equation (7) subject to keeping the total cost from increasing. This can be expressed as,

$$Minimize\ \hat{I}_{out}^{NP} = \hat{I}_{out}^{NP}(\dot{\underline{M}}^{(out)}, \underline{x}_1^{NP}, \underline{x}_2^{NP}, \ldots, \underline{x}_n^{NP}, \dot{\underline{P}}) \quad (13)$$

subject to Equation (12) where $\dot{\underline{M}}^{out}$ is the vector of mass flowrates for all the output streams, $\underline{x}_i^{NP}$ is the vector of mass fractions for non-product component i in all output streams, and $\dot{\underline{P}}$ is the vector of mass flowrates for all products. The optimization could involve the variation of operating variables and modification of the flowsheet configuration both. In this way one can systematically reduce the pollution indexes even in very complex processes. There are several robust algorithms such as simulated annealing (Kirkpatrick *et al.*, 1983; van Laarhoven and Aarts, 1987) that can be successfully used along with mixed integer programing (Grossmann, 1985; Grossmann, 1990) here.

CONCLUSIONS

A general theory and a methodology for incorporating pollution reduction into chemical process design has been presented. The work is still at an early stage of development particularly with respect to its application. However, the fundamental bases along which future work will proceed have been established.

When used in conjunction with chemical process simulators, the WAR Algorithm offers a powerful methodology for evaluating the potential environmental impact of alternative process flow sheets. Although, the WAR Algorithm is intended for use as part of a good faith effort to reduce the environmental foot print of process plants, and it does not obviate the need to make judicious engineering and environmental decisions. For example, there is no completely unambiguous way of setting values for the impact weighting factors or α_i's. The reason is that the α_i's represent the value that society places on particular types of environmental impacts, and this will vary across locations, cultures, and even time. One should point out, however, that engineering design practice has always used human judgement in determining

therefore, this dilemma is not new.

Never the less, there is a need to further improve the methodology for estimating potential environmental impacts and the weighting factors, there is a need to incorporate economics into the analysis, and there is a need to include computer aided process design and optimization. Future work will address these issues. The case studies, however, do illustrate that even in its present state the methodology is a useful process design tool.

ACKNOWLEDGMENTS

The authors wish to acknowledge the support of Chemstations, Inc., Houston, Texas under a Cooperative Research and Development Agreement with the U.S. Environmental Protection Agency. The authors also thank Dr. Douglas Young at the U.S. Environmental Protection Agency for critiquing the manuscript.

LIST OF SYMBOLS

C_c Capital costs associated with a chemical process, monetary

C_o Operating costs associated with a chemical process, monetary

I_{syst} Potential environmental impact content of system, impact

$\dot{I}_{in}$ Potential environmental impact input rate, impact/hour

$\dot{I}_{out}$ Potential environmental impact output rate, impact/hour

$\dot{I}_{gen}$ Potential environmental impact generation rate, impact/hour

$\dot{I}_{in}^{(i)}$ Potential environmental impact flow of stream j input (i=*in*) or output (i=*out*), impact/hour

$\dot{I}_{gen}^{NP}$ Potential environmental impact generation rate by non-products, impact/hour

$\dot{I}_{out}^{NP}$ Potential environmental impact output rate due to non-products, impact/hour

$\dot{I}_{in}^{NP}$ Potential environmental impact input rate due to non-products, impact/hour

$\hat{I}_{gen}^{NP}$ Specific potential environmental impact generation from non-products, impact/ kilogram

$\hat{I}_{out}^{NP}$ Specific output of potential environmental impact due to non-products, impact/kilogram

$\dot{M}_j^{(i)}$ Mass flow rate of stream j, input (i=*in*) or output (i=*out*), kilograms/hour

$\underline{\dot{M}}^{out}$ Vector of mass flowrates for all output streams, kilograms/r hour

$\hat{M}_{gen}^{NP}$ Specific generation of non-product mass, kilograms/kilogram

$\hat{M}_{out}^{NP}$ Specific output of non-product mass, kilograms/kilogram

$\dot{P}_p$ Mass output rate of product p, kilograms/hour

$\underline{\dot{P}}$ Vector of mass flowrates for all products, kilograms/hour

x_{kj} Mass fraction of chemical k in stream j

x_{kj}^{NP} Mass fraction of non-product k in stream j

$\underline{x}_i^{NP}$ Vector of mass fractions for non-product component i in all output streams, kilograms/kilograms

α_l Chemical independent relative weighting factor for impact of type l, impact/kilogram

Φ_j Pollution index, kilograms/kilogram

σ_j Standard deviation of all chemical scores in impact category j, no units

ψ_j Overall potential environmental impact of chemical j, impact/kilogram

$\psi_{j,l}^s$ Specific (s) potential environmental impact of chemical j for impact of type l, impact/kilogram

$(Score)_{j,j}$ Relative potential impact score of chemical i for impact of type j, no unit

$\langle (Score)_{j,j} \rangle_j$ Arithmetic average of the scores for all chemicals i in impact category j, no units

REFERENCES

Aspen Technology, 1997, *Aspen Plus*. Aspen Technology, Inc.;Cambridge, Massachusetts.

Chemstations, 1997, *Chemcad III, Ver. 3.2*. Chemstations, Inc.; Houston, Texas.

El-Halwagi, M. M.; El-Halwagi, A. M.; Manousiouthakis, V., 1992, Optimal Design of Dephenolization Networks for Petroleum-Refinery Wastes. *Trans.I.Chem.E.* 70b, 131.

Fonyo, Z.; Kurum, S.; Rippin, D. W. T., 1994, Process Development for Waste Minimization: The Retrofitting Problem. *Computers Chem. Eng.* 18, S591.

Grossmann, I.E., 1985, Mixed-Integer Programming Approach for the Synthesis of Integrated Process Flowsheets, *Comp. Chem. Eng.* 9, 463.

Grossmann, I.E., 1990, Mixed-Integer Non-Linear Programming Techniques for the Synthesis of Engineering Systems, *Res. Eng. Des.* 1, 205.

Heijungs, R. (Final Ed.); Guinée, J.B.; Huppes, G.; Lankreijer, R.M.; Udo de Haes, H.A.; Wegener Sleeswijk, A., 1992, *Environmental Life Cycle Assessment of Products Guide - October 1992*, Centre of Environmental Science, Leiden.

Hilaly, A.K.; Sikdar, S.K., 1994, Pollution Balance: New Methodology for Minimizing Waste Production in Manufacturing Processes. *J. Air & Waste Manage. Assoc.* 44, 1303.

ICARUS Corporation, 1997, *ICARUS Software*. ICARUS Corporation; Rockville, Maryland.

Lapin, L.L., 1975, *Statistics - Meaning and Method*. Harcourt-Brace-Jovanovich; New York.

Kirkpatrick, S.; Gelatt, C.; Vecchi, M., 1983, Optimization by Simulated Annealing. *Science*, 220, 670.

Lederman, P. B.; Weaver, J., 1991, Pollution Prevention Through Process Modification: The Challenge of the Decade. AIChE Annual Meeting, LA, Paper 244a.

Mallick, S.K.; Cabezas H.; Bare J.C.; Sikdar, S.K., 1996, A Pollution Reduction Methodology for Chemical Process Simulators. *Ind. Eng. Chem. Res.*, 35, 4128.

Manousiouthakis, V.; Allen, D., 1995, Process Synthesis for Waste Minimization. AIChE Symp. Ser. *304*, 72.

Peters, M.S.; Timmerhous, K.D., 1968, *Plant Design and Economics for Chemical Engineers*. McGraw-Hill; New York.

Richardson Engineering Services, 1997, *Process Plant Construction Estimating Standards*. Richardson Engineering Services, Inc.; Mesa, Arizona.

Rossiter, A.P., 1995, *Waste Minimization Through Process Design*. McGraw-Hill; New York.

Van Laarhoven, P.J.M.; Aarts, E.H.L., 1987, *Simulated Annealing: Theory and Applications*. Reidel Publishing Co.; Holland.

Appendix B

WAR Database

Chemical Name	CAS #	Class	Category Score						
			HTPI,TTP	HTPE	ATP	GWP	OD	PCO	AP
ALDRIN	309-00-2	halogenated/ket	9.020696	1.180252	32.23567				
ARSENIC	7440-38-2	metal	0.512107	59.06063	0.223263				
ASBESTOS	1332-21-4			2.950631					
BENZENE	71-43-2	hydrocarbon/aro	0.11819	9.23E-02	8.98E-02			0.388376947	
CARBON TETRACHLORIDE	56-23-5	halogenated	0.166271	0.008203	0.053389	0.412686	0.452695		
CHLORDANE	57-74-9	halogenated/hyd	1.759036	0.590126	9.210192				
CHLOROFORM	67-66-3	halogenated	0.430327	0.00123	0.017134	0.007936			
DDT	50-29-3	halogenated/aro	4.04376	0.295063	47.5052				
DICHLOROMETHANE	75-09-2	halogenated	0.244211	0.006711	0.00713	0.004762		0.020549045	
DIELDRIN	60-57-1	halogenated/eth	9.185565	1.180252	37.60828				
1,2-DIPHENYLHYDRAZINE	122-66-7	amine/aromatic	1.168794		0.031944				
ENDRIN	72-20-8	halogenated/eth	117.269	2.950631	722.0791				
ETHYLBENZENE	100-41-4	hydrocarbon/aro	0.111639	0.000679	0.048685			1.218558356	
ETHYLENE DIBROMIDE	106-93-4	halogenated	3.257473	0.001967	0.004986				
ETHYLENE OXIDE	75-21-8	epoxide	5.426908	0.328115	0.026313				
HEPTACHLOR	76-44-8	halogenated/hyd	8.795178	0.590126	22.56497				
HEXACHLOROBENZENE	118-74-1	halogenated	0.039074	1.18E+01	1.00E-01				
HEXACHLOROETHANE	67-72-1	halogenated	0.087609	0.02953	1.444641				
KEROSENE (*MW estimated a	8008-20-6	hydrocarbon	0.083325	0.002951	0.111657				
METHANOL	67-56-1	alcohol	0.069427	0.001136	7.52E-05			0.252753251	
METHYL ETHYL KETONE	78-93-3	ketone	0.142761	0.000501	0.000686			0.971969819	
METHYL ISOBUTYL KETONE	108-10-1	ketone	0.187855	0.00072	0.00421				
MIREX	2385-85-5	halogenated	1.497052		3.950281				
m-XYLENE	108-38-3	hydrocarbon/aro	0.078147	0.000679	0.138144			2.040520148	
o-XYLENE	95-47-6	hydrocarbon/aro	0.174351	0.000679	0.134774			1.368566383	
PENTACHLOROPHENOL	87-86-5	halogenated	13.02989	0.590126	3.808434				
PHOSGENE	75-44-5	halogenated/acid	0.520476	0.738258	0.002233				
POTASSIUM CYANIDE	151-50-8	salt	78.14747	0.023624	6.500884				
p-XYLENE	106-42-3	hydrocarbon/aro	0.078147	0.000679	0.076217			1.824755177	
SELENIUM	7782-49-2	metal	0.052509	1.475315	0.902599				
STYRENE	100-42-5	hydrocarbon/aro	0.078147	0.00069	0.054983				
TOLUENE	108-88-3	hydrocarbon/aro	0.078147	0.000394	0.064497			1.156911222	
TOXAPHENE	8001-35-2	halogenated	7.036142	0.590126	90.25988				
1,1,1-TRICHLOROETHANE	71-55-6	halogenated	0.037936	0.000155	0.041862	0.031745	0.050299	0.002054904	
1,2,4-TRIMETHYLBENZENE	95-63-6	hydrocarbon/aro	0.078147	0.002401	0.286308			2.465885375	
VINYL CHLORIDE	75-01-4	halogenated	0.781475	0.227156	0.003914				
ZINC OXIDE	1314-13-2	inorganic	0.763159	0.059061	0.000984				

HTPI = Human toxicity potential by ingestion
HTPE = Human toxicity potential by inhalation or demeral exposure
ATP = Aquatic toxicity potential
TTP = Terrestrial toxicity potential (same method as HTPI)
GWP = Global warming potential
ODP = Ozone depletion potential
PCO = Photochemcial oxidatio all values taken from OSHA unless otherwise stated
AP = Acid rain potential

Appendix C

Paint 21-Y104A - Yellow Primer

	Zinc Oxide	3% by wt.
VOC -	Toluene	9%
VOC -	Lig coin	16%
VOC -	N-Butanol	2%
VOC -	N-Butyl Acetate	1%
VOC -	Aliphatic Naphtha	12%
VOC -	1,2,4-Trimethyl benzene	1%
VOC -	Aromatic Naphtha	2%
		46%

VOC MAKE UP = 43%

Assume 55 gallons used in 1 year (208 L)

$55\,gal \cdot 9.45\,\frac{lb}{gal} = 519.75\,lb/year$ (235.8 kg/year)

VOC make-up: $519.75\,lb/year \cdot 43\% = 223.5\,lb/yr$ (101.4 kg/year)

Percent of VOC in VOC Wastestream: 100%

Mass of VOC wastestream: $223.5\,lb/yr \cdot 100\% = 223.5\,lb/yr$ (101.4 kg/yr)

Composition of VOC wastestream:

Toluene $\frac{9}{46} = 19.6\%$

1,2,4-Trimethylbenzene $= \frac{1}{46} = 2.2\%$

Mass of Paint Pigment Waste stream:

assume 50% overspray $(519.75 - 223.5)\,\frac{lb}{yr} \cdot 50\% = 148.125\,lb/yr$ (67.2 kg/yr)

Composition of Pigment Waste stream:

Zinc oxide: $\frac{3}{(100-43)} = 5.3\%$

Use of Kerosene as insect repellant

assume 20' long bath, 1' deep, 3' wide

$= 60\ cf \cdot 7.48 \frac{gal}{cf} = 448.8\ gal$

assume changed once per month

$\rightarrow$ mass flow rate $= 448.8\ gal \cdot 12 \frac{volumes}{year} = 5{,}386\ gal/year$

Density $= 0.8 \cdot \frac{1g}{cm^3} \cdot \frac{1000\ cm}{1\ L} \cdot \frac{L}{0.2642\ gal} = 3\ Kg/gal$

$5.386 \frac{gal}{year} \cdot 3 \frac{kg}{gal} = 16{,}158\ kg/year$