PN-ACQ-193

ECO

Energy Conservation and Commercialization Project

A Program of USAID, Ministry of Power and ICICI

Report on Technical Potential of Cogeneration of the non-sugar industry

December 2000

MILESTONE 6A

Prepared for: United States Agency for International Development (USAID), American Embassy, Chanakya Puri, New Delhi 110 021. Contract No. LAG-I-00-98-0000

USAID Contract Number: LAG-I-809-98-00006-00

23865-809.0017

Implemented by:

Nexant Inc., *ID II Parkwood Estate, Rao Tula Ram Marg, New Delhi 110 022.*
Tel: +91 11 6188816, +91 11 6181376. Fax: +91 11 6190022. email:nexant@vsnl.com

Nexant Inc., *408 Dalamal Tower, Nariman Point, Mumbai 400 021*
Tel: +91 22 2884554, +91 22 2825869. Fax: +91 22 2884555. email:nexantm@vsnl.net

Preface

This report is a part of the deliverable for Milestone 6A, to submit a detailed market assessment of the technical potential of cogeneration in the non-sugar industry. Activity 6, 'Non-Sugar Cogeneration Market Development' is intended to examine and validate the concept of selling excess co-generated power to utilities using commercial principles in the pricing and negotiation of power sales. The objective of the milestone 6A is to conduct a national survey of industrial plants to establish the technical and economic potential for non-sugar cogeneration, and using this survey to develop a program plan for the activity.

Background

The Government of India ('GOI') and the US Agency for International Development ('USAID'), signed a joint project agreement on 28 January 2000, for the implementation of the Energy Conservation and Commercialization Project ('ECO'). The ECO is a 4-year program that targets the reduction of greenhouse gas ('GHG') emissions per unit of electricity generated and consumed in India.

ECO aims to promote widespread commercialization of energy efficiency technologies and services in India, thereby contributing to the reduction in growth of GHG emissions. However, assistance will be provided for developing a market-oriented policy environment for commercialization of energy conservation, and enhancing the capabilities of the private and financial sectors for deploying market-based mechanisms for energy efficiency investments. The ECO project supports USAID's Climate Change Strategy and will contribute to USAID/India's Strategic Objective for increased environmental protection in energy, industries and cities.

ECO will facilitate the commercialization of energy services and technologies through a two-pronged strategy: (1) Energy Efficiency Market Development and Financing (Markets Component), and (2) Energy Efficiency Policy and Institutional Reforms (Policy Component).

The Markets Component includes the following major activities:

- Technical and project structuring services for sponsors;
- Development of financial incentives for credit enhancement/risk mitigation;
- Support to energy efficiency services industry;
- Efficient technology promotion;
- Market conditioning and promotion; and
- Non-sugar co-generation market development.

The Policy Component covers policy, regulatory and institutional reform issues at the central and state levels including the following major activities:

- Energy efficiency policy and institutional support;
- Energy efficiency standards for labeling for consumer appliances;
- Energy efficiency improvement in Government facilities and private buildings;
- Electric Utility DSM/energy efficiency capacity building;
- Development of State energy efficiency financing schemes; and
- DSM/energy efficiency within privatized distribution utilities.

Technical assistance ('TA') and training will be provided to various government agencies to assist them creating a market-oriented policy environment conducive to investment in efficiency. TA and training will be provided to the private and financial sector to design and implement energy conservation projects. The Ministry of Power (and the subsequent Bureau of Energy Efficiency) will be the partner agency for the ECO project. State-level activities under the Policy Component will be coordinated with the State Regulatory Commission and State Electricity Boards (including its functionally unbundled entities) of the focus-state.

1.0. Executive Summary

1.1. Project objective

India's power sector is passing through a transition stage and various challenges before them are the pressures to add new generation capacities to meet rapidly growing demands, Tariff reforms and environmental issues arising out of rapid development of power projects. All these challenges reemphasize the need to consider innovative and appropriate technologies. This study was conceived against this background and looks critically at industrial cogeneration (non-sugar) as an option for generation of electricity in an economically and environmentally sound manner.

1.2. Energy and Power sector scenario

1.2.1. Energy consumption and Emission

A brief over view of the energy and power sector are presented in this section. Of all the commercial energy consumed in the country, coal forms 55% of the total energy. The total quantum of coal consumed annually is 307 Mt and the power sector accounts for a consumption of 206 Mt. The carbon dioxide emission from the power sector is estimated to be around 420 Mt. The process of economic reforms initiated in 1991 has resulted in an average economic growth rate of 6% to 6.5 %. With policies of further liberalization, the economic growth rate is expected to increase further. The Energy-GDP elasticity is estimated to be 0.97 and a shift in growth rate means higher energy demand.

1.2.2. Power Sector

A. The Economic growth has also resulted in higher demand for the electricity which is growing the rate of 9 %. The total installed generating capacity is 96,000 MW and a the break up of various sources of the electricity is given in the following table.

Sl. No.	Source	Capacity (MW)	% Contribution
1	Thermal	69474.76	72.17
2	Hydro	23527.28	24.44
3	Nuclear	2240	2.33
4	Diesel and Wind	1024	1.06
	Total	96266.04	100

(Source: Annual report, 1999-2000, Ministry of power, New Delhi.)

B. The total amount of electricity generated during the year 1999-2000 was 469 Twh. The energy accounting for the year 1998-1999 have been as under

- Total energy generated 421Twh
- Energy available to the gird 394 Twh
- Energy sold 297 Twh
- Total energy losses 24.79 %

The Average plant load factor (PLF) during this period was 66.1%

C. The demand pattern for the electricity had also been under going a change with the share of industry reducing and share of agriculture registering a constant rise. The sector wise sale of power is furnished the following figure.

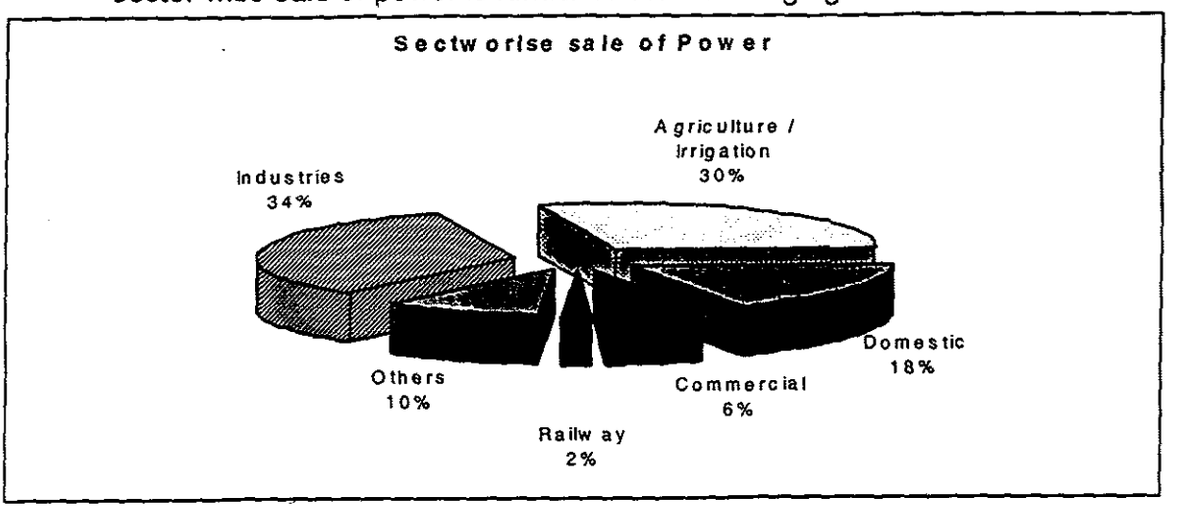

D. The number of major category of industries having a load of 1 MW and above is 1685 and these industries consume about 33% of the industrial consumption of 104 Twh. These major industries include aluminum, caustic soda, pulp & paper, iron & steel, etc and these industries also resort to self generation. The ratio of captive generation : grid power in case of large industries is 53:47 and the details of installed capacity and generation from these captive plant is furnished below.

Table 6: KW/Kwh for Ratio Selected Industries having Installed Captive Capacity of 1 MW & above

Type of Plants	Installed Capacity (In MW)	Generation (In MU)	Kwh/KW Ratio
Steam	6628.87	30683.70	4628.80
Diesel	4958.13	7463.62	1505.33
Gas	1330.44	5775.66	4341.16
Wind	65.74	48.81	742.47

About 67 % industrial consumption is by the industries having load below 1 MW. Although no authentic information is available on the captive plants available in this sector , data collected shows that these plants have DG sets as a source of stand by power and the estimated capacity of such installations is 11,000 MW.

In general industries in general large once opt for self generations to ensure reliability and quality power.

E. The demand and supply gap of electricity is constantly growing and the capacity planned for the next 12 years is above 1,20, 000 MW which still leaves a gap of 22,000 MW peak shortage. Also the poor financial state of the state electricity boards well encouraged them to look for private investments to meet the huge investment requirements.

F. The government of India had been actively pursuing for the unbundling and privatization of the state electricity boards and a number of SEB'S have commenced this process. One of the main objectives of the process is rationalization of tariffs and the immediate development is the upward revision of tariffs for all categories of consumers. The power purchase from the IPP's is likely to push the power cost higher and solution to this lies in improving the energy efficiency and adaptation of cogeneration technologies.

It can be concluded from fore going that more industries will opt for self-generation in view of the increasing tariffs and poor quality of power. The power-starved scenario is likely to continue unless huge investments are mobilized for the massive growth in the power sector. Coal will be the dominant fuel with associated problems of emissions and ash disposal. Considering these factors industrial cogeneration appears to be the appropriate technology to tide over the crisis and the available options are discussed in the next section.

1.3. Technical potential for cogeneration in non sugar industry

1.3.1. Sector selection and analyses

Cogeneration can be defined, as the simultaneous generation of heat & power and the vital advantage of the cogeneration system is its ability to save on energy requirements for a specified demand of heat & power. In order to estimate the technical cogeneration potential, 24 numbers of sectors were analyzed and the following were the consideration while selecting the sectors.

- The sector should be energy intensive
- The industry should be a continuous process one
- Batch process units can be considered if the sector is a large one
- The individual plants should have a power demand of at least 1 MW.

Depending on the heat and power demand, topping /bottoming cycles were analyzed to select the appropriate cycle for the sector. The cogeneration configurations considered were boiler – turbine, gas turbine-waste heat boiler, DG set-waste heat boiler, power recovery from waste heat. A boiler pressure of 100Kg /Sq.m was considered as the maximum for steam cycles. From the technical analysis, a total of 17 sectors having potential for cogeneration were short listed and 9 sectors having export potential were selected for financial analysis.

1.3.2. Technical cogeneration potential in Indian industries (non sugar)

The technical cogeneration potential available in the Indian industries, the most suitable cogeneration configuration, captive use and the export potential are listed in the following table.

SECTOR	COGENERATION SYSTEM	TECHNICAL COGENERATION POTENTIAL, MW	CAPTIVE USE, MW	EXPORT POTENTIAL, MW	EXISTING COGEN CAPACITY
1. Caustic soda	Furnace oil fired generators with waste heat recovery boilers and turbines	800	740	60	0
2. Cement	Waste heat recovery – Bottoming system	750	750	0	0
3. Fabric wash-soaps and detergents	Gas Turbine	85	85	0	0
4. Fertilizers	Gas Turbine	210(810)	210	0	610
5. Distillery	Steam Turbine with back pressure turbine or Gas turbine with waste heat boiler	43(58)	43	0	15
6. Chemical-Sulphuric acid	Steam turbine with back pressure cum condensing turbine	65(100)	15	85	35
7. Pulp and paper	Steam turbine	350 (600)	480	120	250*

8. Pharmaceuticals	Diesel Engines with waste heat recovery boiler	60(80)	60	20	20
9. Refineries	Gas Turbine based combined cycle	300(1050)	200	100	750
10. Soda ash	Steam turbine	97(132)	42	55	35
11. Iron and Steel	Bottoming System	530(1900)	530	0	1377
12. Textiles – Cotton	Steam turbine	810	810	0	0
13. Textiles - VSF,VFY	Steam turbine	1180	490	690	-*
14. Tyres	Steam turbine	110(155)	110	0	45
15. Hotels	DG sets with waste feat recovery boiler	85	85	0	0
16. Sponge Iron	Bottoming system with waste heat boiler and condensing turbine	160(180)	60	120	20
17. Carbon Black	Bottoming system with waste heat boiler and condensing turbine	27	15	12	0

The overall available technical cogeneration potential in the Indian Industries (non Sugar) may be summarized as follows.

The total technical cogeneration potential	: 8759 MW
Cogeneration potential already tapped	: 3157 MW
Technical potential left to be tapped	: 5602 MW
Export potential available	: 1262 MW

Export potential: The export potential through cogeneration is available in the following sectors.

SECTOR	EXPORT POTENTIAL, MW
Caustic soda	60
Chemical-Sulfuric Acid	85
Pulp and Paper	120
Pharmaceuticals	20
Refineries	100
Soda Ash	55

Sponge Iron	120
Chemical-Carbon Black	12
Textiles – VSF & VFY	690
Total	**1262**

Apart from the export potential the cogeneration potential for captive use is about 4665 MW in these industries

1.4 Advancing co generation

The out come of the review carried out on policy, technical, commercial and financial issues are summarized in this section.

1.4.1. Technical issues

1.4.1.1 In plant issues

- The steam power ratio of the plant primarily dictates the configuration of the co generation plant. However the availability and the pricing of the prime fuel several times dictates the prime mover chosen.
- There is some suspects still about the reliability of the gas turbines and the experience had been that their maintenance is expensive.
- Large capacitive steam turbines are still imported
- The focus of the individual plants is about their core manufacture and a constant apprehension exists that cogeneration plant failure can have significant impact on the core business
- Lack of expertise on the operation of cogeneration pl ant

1..4.1.2. Utility issues

- The evacuation voltage and the proximity of the substation has significant role to play on the cost of cogeneration plant. In general at the distribution voltage level, the system is unreliable and for exporting power at transmission voltage, the protective systems have to be lot more stringent. Also managing number of co generation plants at transmission voltage level is an issue to be addressed in detail, as the impact of disturbances can be severe on the utility.
- Till now utilities have not taken into consideration the capacity available cogeneration in the planning process.
- The quality of power of the utility grid in terms of frequency and voltage is another important issue to be addressed on parallel operation with the utility

1.5. Commercial issues

1.5.1. The following conclusions are drawn after reviewing the various commercial issues like tariffs and the willingness of the clients and the utility for power export

- The electricity pricing policies will have a crucial role in the advancing non-sugar co-generation.
- Many of the large industries may opt for co-generation to ensure stability of operations and also because of rising power costs. The response from the industry with regard to export of power is mixed one and at present it appears that the utilities are not keen to promote industrial co-generation, with export of surplus power.
- The industry is not convinced about timely settlement of power sales accounts by the utilities, although some exceptions have been noted.

1.5.2. The trend in various sectors was analyzed to decide about the priority sectors for promoting cogeneration.

- Implementation of cogeneration in fertilizer, refineries and iron & steel industries requires substantial process modification also. The heat power balance is frozen at the design stage and lot more investments is required in the process area also. Usually cogeneration may form a part of the overall modernization plan of the industries in these sectors.
- The paper industry is stagnant at present. However the power cost is crucial in the viability of paper industry and cogeneration will be vital for many small paper plants.
- Similar situation as paper exists in sponge iron units also. The advantage of this sector is the availability of waste gas for cogeneration rendering a near zero fuel cost.
- The textile industry is considered as a stable one.
- Since surplus capacity exists the soda ash sector large expansions or creation of new capacity is unlikely. This sector is keen on co generation in order to reduce the power costs.

1.6. Government policies

The following comments on the government policies on cogeneration

- There is no directive rule that every state should encourage Cogeneration.
- The SEB has given full freedom in setting up the cogeneration units.
- The policy does not say about incentives / financial assistance given by the Central / State, in setting up cogeneration plants.
- The policy does not speak about the environmental aspects of the industry / industries, which go in for cogeneration. (GHG Emissions)

- No common grid voltage has been specified for parallel operation of the cogeneration units.
- The purchase of power from cogeneration power is optional by the SEB's and this prevents the promoter from planning for surplus generation under the power maximization mode.
- The policy is silent on wheeling and banking and third party sales by the cogeneration plants.
- No minimum tariff is set by the Central Govt. policy, which may result in discouraging the cogeneration producers.

1.7. Financial aspects

A financial viability of cogeneration plant in the 9 sectors selected was carried out and the summary is presented in the following table.
Project cost estimates are provided in the annexure to the executive summary.

Summary of Project IRR & DSCR

	Based on Total Funds	
SECTOR	**DSCR**	**IRR**
Sulphuric acid	3.85	36%
Textiles - VSF,VFY	4.36	41%
Pulp and paper	5.05	47%
Soda ash	4.39	41%
Refineries	2.32	19%
Caustic soda	1.75	12%
Pharmaceuticals	1.04	1%
Sponge Iron	4.17	39%
Carbon Black	4.57	43%

1.8. Conclusions

Industrial cogeneration is suggested in the following sectors

1. Pulp & paper
2. Sponge Iron
3. Textile
4. Soda ash

Number of issues like tariff, fuel availability and pricing have to be considered in detail prior to promoting cogeneration in these sectors.

CHAPTER -2
THE CASE FOR COGENERATION IN INDUSTRIAL SECTOR

2.1 . PROJECT OBJECTIVE

India's power sector is passing through a transition stage and various challenges before them are the pressures to add new generation capacities to meet rapidly growing demands, Tariff reforms and environmental issues arising out of rapid development of power projects. All these challenges reemphasize the need to consider innovative and appropriate technologies. This study was conceived against this background and looks critically at industrial cogeneration (non-sugar)
as an option for generation of electricity in an economically and environmentally sound manner.

2.1.National energy consumption

2.1.1. Coal and Lignite:

Presently, India ranks third amongst the coal producing countries of the world. The Coal India Limited (CIL) and its subsidiaries are the major producers of coal, contributing to approximately 88% of the coal produced in India. The total production of coal in 1997/98 has been 307 Mt and the major consumption of coal is in the thermal power plants which is about 206 million tons . The sector wise consumption of coal in 1997/98 is given below.

Table-1: Sector wise consumption of Coal, 1997-98

SECTOR	CONSUMPTION, in million tons
Steel and Washery	39.8
Railways	0.1
Electricity	205.5
Cement	10.1
Cotton	1.3
Paper	3.4
Brick	1.6
Other Industries	
Colliery Consumption	3.1
Total	307.1

Source: Coal Directory of India, Calcutta, Coal controllers Organisation, Ministry of Coal.

2.1.2 Oil and Gas

The overall consumption of petroleum products in 1997/98 was about 85 million tons and the consumption of natural gas was about 19500 million cubic meters. The off-take of natural gas by the industry for energy purposes was about 10700 million cubic meters and the rest was for the non energy purposes.

2.1.3. Energy consumption in Industrial sector:

The Industrial sector in India accounts for about 50% of the total commercial energy . During 1996/97 the total industrial energy consumption , including non energy uses, was 113.1 MTOE (million tons of oil equivalent). Of the commercial sources of energy, the contribution of different sources are as follows:

Table-2: Contribution of different sources energy in the total industrial energy consumption:

SOURCE	PERCENTAGE SHARE
Coal and Lignite	57
Oil and Natural gas	33
Hydro Electric Power	3
Nuclear power	2
Others	5

Source:
All India Statistics, CEA, New Delhi
Coal Directory of India, Coal controller Organisation, Ministry of Coal
Indian Petroleum and Natural Gas Statistics, Economic and Statistics division, Ministry of petroleum and natural gas, New Delhi
Fertilizer statistics, The fertilizer Association of India, New Delhi.

2.2. POWER SECTOR

2.2.1.Background
Ever since India attained independence, development of the electricity sector has primarily been the responsibility of the Government. The need for restructuring of the sector to rationalize its growth all over the country led to the enactment of the electricity (supply) Act in 1948. And thus State Electricity Boards (SEBs) were formed which were administered by the Central Government, and were responsible for power generation, distribution and development of the sector, in their respective States. With the advent of Five-year plans, a significant step was taken in developing the power supply industry in a systematic manner leading to setting up power stations with significant increase in power generation.

The Central government participation in power generation area started with setting up of National Thermal Power Corporation and National Hydro Power Corporation in 1975. They have entered the area of power generation in a big way, owning 22% of total installed capacity, giving a boost to the power sector. The setting up of Nuclear Power Corporation and Power Grid Corporation of India has further strengthened the Center's commitment towards power sector.

The total installed capacity as on 31.01.2000 is 96266 MW and the anticipated energy generation for the year 1999-2000 is 469 Twh. (Ref: Annual Report, 1999-2000, Ministry of Power, New Delhi)

The process of economic reforms initiated in 1991 has resulted in an average economic growth rate of 6% to 6.5 %. With policies of further liberalization, the economic growth rate is expected to increase further. The Energy-GDP elasticity is estimated to be 0.97 and a shift in growth rate means higher energy demand.

2.2.2. Emissions from the sector

Coal is the dominant fuel for the power sector and this sector accounts for 66% of the total of 300 Mt of coal consumed in the country. The carbon di-oxide emissions in India were estimated to be 630 million tonnes for the year 1993-94 and the power sector accounts for about 65 % of the total carbon di oxide emission (420 million tons)*. Considering the economic growth, the GHG emission in the country, particularly from the power sector, is expected to increase substantially. The Government of India has been emphasizing on reducing emission in the country through various measures and promotion of Energy Efficiency is one of the significant policy interventions.

2.2.3. Current status
2.2.4. A) Power generation

In India, the demand for Electricity is growing at a compounded rate of over 9 percent, which is among the highest in the world. The development of power sector had therefore, been receiving special emphasis in the economic development of the country. The following paragraphs summarize the power scenario in the country.

The primary resources for power generation in the country are water, coal, lignite, oil, natural gas and nuclear power. Although hydro resources was considered most suitable two decades back, it is now been replaced by coal, lignite, oil, natural gas and nuclear resources. The installed generating capacity (Jan 2000) was over 96,000 MW. The breakup of installed capacity source-wise is given in table-3.

Source: Estimated from data in: A.P.Mitra, ed., "Greenhouse Gas Emissions in India: 1996 Update" Centre for Global Change, National Physical Laboratory, New Delhi, 1996

Table-3: Source wise installed generating capacity, Jan, 2000

Sl. No.	Source	Capacity (MW)	% Contribution
1	Thermal	69474.76	72.17
2	Hydro	23527.28	24.44
3	Nuclear	2240	2.33
4	Diesel and Wind	1024	1.06
	Total	96266.04	100

(Source: Annual report, 1999-2000, Ministry of power, New Delhi.)

There was a progressive increase in the share of Hydro for power generation up to the mid sixties (45 % in 1966) and since then, it has been declining steadily (24.44% in January 2000). The possible reasons for this trend could be high gestation period required compared to other available sources like coal/oil based thermal power stations. The Hydro development is also been lagging behind owing to interstate disputes on water sharing, inadequate funding, environmental considerations etc.

In recent years, non -conventional energy sources like bio-gas, wind, solar, small hydro power and ocean energy are being considered for power generation. Of these, wind energy based power stations have been setup at a faster rate, as a result of considerable encouragement both from the Government and private investors.

B) Sector wise sale of power

Even though the per capita consumption of electricity in India is still low (336 kWh in 1996/97), the demand for electricity has been increasing at a rapid rate. The sector wise sale of power is presented in figure-1.

Fig-1: Sector wise sale of power

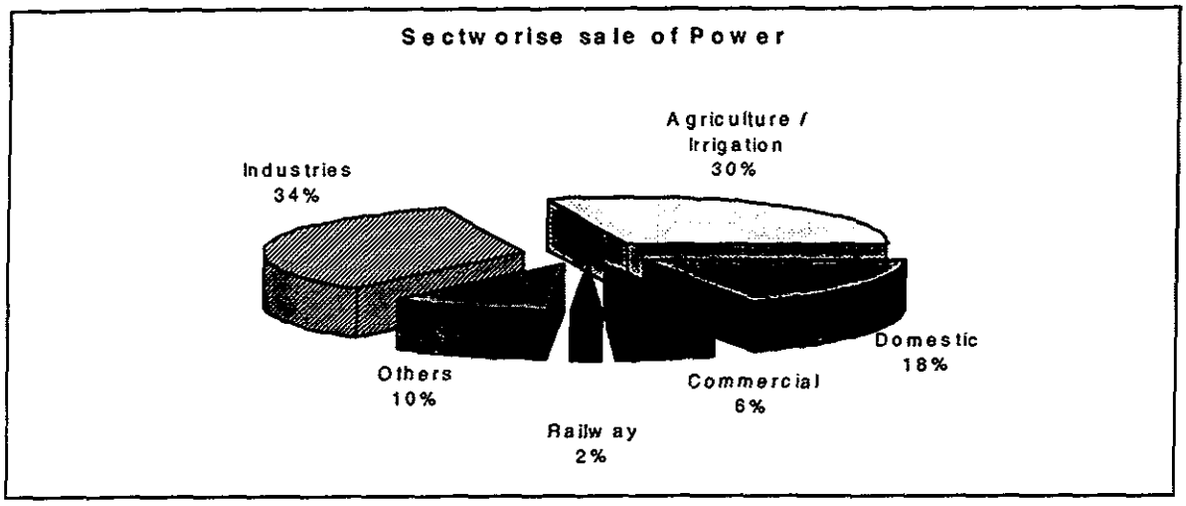

The pattern of consumption has also undergone some significant changes during the past four decades. The most significant of them, is the increased consumption in the agricultural and the domestic sectors. The trends in various sectors are discussed in the following paragraphs.

a) The industrial sector still accounts for the major share in the consumption of electrical energy, although its share has registered a decline from 70.6 % in 1965/66 to 34% in 1998/99. A large number of industries are increasingly relying on captive power because of increasing power shortages, poor quality and high cost of power. The recent development in this sector is the setting up of industries in the areas of information technology, electronics (networking, telecom, internet service providers, consumer electronics and related services). The major requirement of these industries is the availability of reliable power supply with no barrier for costs at which it is available.

b) The consumption in the agricultural sector has recorded the maximum increase than any other sector- from a mere 3.9 % in 1950/51 to 30 % during 1998/99. This increase in consumption could be attributed to the implementation of rural electrification programme by the Government. This has led to large-scale installation of electric pump sets (from 1.6 million in 1950/51 to 11.9 million in 1997/98). The yield in return from this sector is not commensurate with the mechanization achieved, which is possibly because of improper use of electrical energy.

c) The domestic sector consumption at 18% in 1998/99, has grown at a compounded rate of more than 10 % in past few years, which infers a doubling in its share of consumption within a short period. Increased urbanization and increased use of domestic electric appliances are possible reasons for this trend.

d) The commercial sector, consisting of shops, offices, institutions, hotels etc., have maintained a constant share of about 6 % of total consumption.

C) Power demand and supply position :

The total power supplied during the year 1997-98 was 394Twh and the energy sold was 297 Twh, the balance of 0.97 TWH being the losses. The overall generation has increased from 422Twh to 469 Twh between the years 1997-98 and 1999-2000. The details of generation, T&D losses and energy deficits for the year 1998-99 is presented in the Table-4

Energy Generated , Purchase, Sold & Energy losses (All india Utilities)

Table-4

Sl.No.	Item	Energy in Gwh	% of Item 1
1	Energy Generated Gross(Utilities)	421747.28	100
2	Energy used in power station Auxiliaries	30684.2	7.28
3	Energy Generated (net) at bus bar	391063.08	92.72

			% of Item 6
4	Energy generated from non Utilities	2541.51	0.64
5	Energy Import from other countries	1384.66	0.35
6	Energy available for supply	394989.25	100
7	Energy sold to ultimate consumers	296748.92	75.13
8	Energy sold to other countries	321.43	0.08
9	Total energy sold	297070.35	75.21
10	Energy lost in transformation transmission & distribution & unaccounted for	97918.9	24.79

The power supply in India is characterized by both peak and energy deficits. The demand supply gap (shortage) had been widening over the years. Two significant factors which contribute for the energy deficits are the low Plant load factor , high T&D losses, which were 66.1% &24.4% respectively for the year 1997-98.

At the national level the additional capacity planned for the period 1999-2012 works out to 120,232 MW and in spite of this capacity addition, the peaking shortage will still be 22,600 MW which is an indication of insufficiency of identified power plants.(Power on demand by 2012, Perspective plan studies, Govt. of India, CEA, July 1999).To sustain the level of growth rate in electricity consumption large investments in electricity infrastructure has to be made. The capacity additions are divided between the SEB'S and private companies. The SEB's are in a state of poor financial health which is limiting their ability to mobilise investment in new infrastructure. Possibly the Indian Government is counting upon private investment and industrial cogeneration can play a important role in this regard. The merits of industrial cogeneration are the relatively lower investment , low gestation period and cheaper Power in majority of cases. Considering the significant role industrial cogeneration can play, this report analyzes the potential for the same in the country- particularly in the non- sugar sector.

2.2.5. Electricity Consumption Scenario in Industries:

The consumption of electricity in industries in 1997-98 is about 104Twh, which includes HV, MV, AND LV industries and the total connected load is 62937 MW. This yields a generation of 1652 kwh/ kw /year. Industries having a connected load of 1MW and above consume 33% of the industrial consumption and share of the major industrial sectors is furnished below(Table -5)

Table 5: Consumption by Selected Industries having Installed Captive Capacity of 1 MW & above

Sl No.	Name of Industry	Energy purchased from Utilities (In MU)	% of Total
1	Aluminium (Primary)	352.41	0.34
2	Aluminium (Secondary)	142.27	0.14
3	Automobiles	581.18	0.55
4	Cement (Primary)	4395.59	4.19
5	Cement (Secondary)	269.37	0.26
6	Chemical	3239.08	3.09
7	Collieries	1095.67	1.04
8	Electrical Engg.	517.44	0.49
9	Fertilizers	2778.35	2.65
10	Food Products	336.69	0.32
11	Heavy Engineering	836.83	0.80
12	Iron & Steel (Primary)	5386.57	5.13
13	Iron & Steel (Secondary)	1282.2	1.22
14	Jute	790.98	0.75
15	Light Engineering	720.17	0.69
16	Mineral Oil & Petroleum	174.82	0.17
17	Mining & Quarrying	466.46	0.44
18	Non-Ferrous	1711.39	1.63
19	Paper	934.46	0.89
20	Plastic	0	0.00
21	Rubber	394.58	0.38
22	Sugar	356.12	0.34
23	Textiles	5790.96	5.52

Textiles, Iron & Steel and chemical industries top the list of major electricity consumers. It is worth while noting that industries having connected load of less than 1MW consume about 67% of electricity.

Besides buying power from utilities, number of producers of primary materials such as Aluminium, Cement, Fertilizers, Iron and Steel, paper, Sugar, etc. have their own captive power plants either to supplement the electricity purchased from the utilities or

for emergency use . The split up between self generation and purchased electricity in these select industries with greater than 1MW demand is 53:47 .

2.3. Captive Power in Industries:

Power intensive industries such as cement, caustic soda, textiles and fertilizers started setting up captive power projects mainly as a back-up source of power to protect themselves against unreliable grid power. Some of the sectors do have captive power plants operate on cogeneration mode and in few cases, export of power to the grid is also resorted to. The details of the installed capacities of the captive power plants in major industrial sectors, the electricity generation, consumption and energy sold to the utilities and the overall electricity consumption are given in Tables- 7,8,9and 10. As per 1997-98 statistics, there were 1685 selected industrial units (having installed plant capacity of 1 MW and above) having total installed capacity of 13000 MW and the electricity generated was 44 Twh from these captive plants. These captive generation plants comprise steam turbines Gas turbines, DG sets and wind mills. The installed captive generation capacity will be far higher if the DG sets below 1MW rating is also taken into consideration. The Power generated from each of these sources is as under Table -6

Table 6: KW/Kwh for Ratio Selected Industries having Installed Captive Capacity of 1 MW & above

Type of Plants	Installed Capacity (In MW)	Generation (In MU)	Kwh/KW Ratio
Steam	6628.87	30683.70	4628.80
Diesel	4958.13	7463.62	1505.33
Gas	1330.44	5775.66	4341.16
Wind	65.74	48.81	742.47

The generation from steam based plants is 4628 kwh/kw/year indicating a overall utilization of 52% for these plants On the contrary the Installed capacity of the diesel generating sets is about 4950 MW. and the power generation from these DG sets is only 7463 GWH per annum, yielding a capacity utilization of about 17%.This indicates that the DG sets are mostly used as standby to take care of the emergencies. It is to be noted that the installed capacity of the DG sets will be far higher if industries with connected load below 1MW are taken into consideration. Although no reliable statistics is available in this regard an estimate had been made taking into account the connected load details. Taking into account a 60% multiplier for the actual load utilization and installation of DG sets in 30 % of the locations, the installed capacity of DG sets is estimated to be 11000MW.

With increasing instability of grid power, some industries started using captive power as a total source of power. Captive power proved to be more reliable and over a longer run, even cheaper than the power cost from the SEB, in select cases.

Table-7: INDUSTRYWISE INSTALLED CAPACITY OF CAPTIVE POWER PLANTS IN SELECTED INDUSTRIES DURING 1997 – 1998 (HAVING INSTALLED PLANT CAPACITY OF 1MW AND ABOVE)

Name of Industry	**No. of Factories Covered**	**Installed capacity as on 31.03.98 MW**					
		Hydro	Steam	Diesel	Gas	Wind	Total
Aluminium (Primary)	4	0	1669.5	0	0	0	1669.5
Aluminium (Secondary)	8	0	62	8.82	0	0	70.824
Automobiles	32	0	0	138.53	60	0	198.533
Cement (Primary)	96	0	353.2	928.55	0	0	1281.751
Cement (Secondary)	15	0	0	47.27	0	0	47.275
Chemicals	170	0	508.67	469.45	68.56	24.45	1071.1.35
Collieries	8	0	95.4	8.28	0	0	103.680
Electrical Egg.	68	0	15	159.72	6	0	180.724
Fertilizer	41	0	616.75	93.76	407.56	0	1118.079
Food products	56	0	1.6	105.42	2.8	2.025	111.854
Heavy Engineering	42	0	0	176.18	0	13.40	189.587
Iron & Steel (Primary)	20	0	1377	77.47	24	0	1478.476
Iron & Steel (Secondary)	60	0	6	165.46	30	0.900	202.361
Jute	64	0	0	166.53	0	0	166.537
Light Engineering	92	0	1.5	223.69	0	0	225.196
Mineral Oil & Petroleum	20	0	331.15	43.28	352.82	15.31	742.568
Mining & Quarrying	7	0	8.6	28.571	0	0	38.171
Miscellaneous	109	17250	35.3	275.05	317.3	0	644.899
Non-Ferrous	27	0	116.8	266.68	20	0	403.486
Paper	55	0	480.84	114.89	0	0	595.738
Plastic	1	0	0	0	12.5	0	12.500
Rubber	28	0	13.1	113.65	0	0	126.757
Sugar	218	0	681.48	117.1	0	0	798.552
Textile	444	3500	254.97	1228.73	28.9	9.650	1525.746
Total	**1685**	**20750**	**6628.8**	**4958.12**	**1330.4**	**65.74**	**13003.92**

Note: In certain States/Category of industries the figures of installed plant capacity are inconsistent due to wrong reporting/not reporting at all by the industry.

Table-8: INDUSTRYWISE INSTALLED CAPACITY ELECTRICITY GENERATION AND IN SELECTED INDUSTRIES DURING 1997 – 1998 (HAVING INSTALLED PLANT CAPACITY OF 1MW AND ABOVE)

Name of Industry	**Energy Generated**					
Aluminium (Primary)	0.00	10423.1	0.00	0.00	0.00	10423.1
Aluminium (Secondary)	0.00	287.25	4.77	0.00	0.00	292.02
Automobiles	0.00	0.00	88.25	248.00	0.00	336.25
Cement (Primary)	0.00	1293.48	1743.98	0.00	0.00	3037.46
Cement (Secondary)	0.00	0.00	40.45	0.00	0.00	40.45
Chemicals	0.00	1990.85	875.11	105.41	17.91	2989.28
Collieries	0.00	226.41	2.70	0.00	0.00	229.11
Electrical Engg.	0.00	15.13	122.50	42.12	0.00	179.84
Fertilizer	0.00	2704.48	318.79	1309.82	0.00	4333.07
Food products	0.00	1.61	59.93	2.91	2.96	67.01
Heavy Engineering	0.00	0.00	115.27	0.00	16.63	131.90
Iron & Steel (Primary)	0.00	7232.74	8.59	0.00	0.00	7241.33
Iron & Steel (Secondary)	0.00	37.37	133.19	233.61	0.69	404.86
Jute	0.00	0.00	122.83	0.00	0.00	122.83
Light Engineering	0.00	1.02	140.05	0.00	0.00	141.07
Mineral Oil & Petroleum	0.00	1402.47	141.42	1840.60	0.00	3384.49
Mining & Quarrying	0.00	6.34	14.29	0.00	0.00	20.63
Miscellaneous	50.00	90.08	279.06	1747.75	0.00	2166.89
Non-Ferrous	0.00	394.28	633.37	27.00	0.00	1054.65
Paper	0.00	1970.18	248.80	0.00	0.00	2218.98
Plastic	0.00	0.00	0.00	37.88	0.00	37.88
Rubber	0.00	17.90	185.57	0.00	0.00	203.47
Sugar	0.00	1585.81	214.87	0.00	0.00	1800.68
Textile	28.84	1003.16	1969.74	180.96	10.62	3193.32
Total	**78.84**	**30683.7**	**7463.62**	**5775.66**	**48.81**	**44050.6**

Table-9: INDUSTRYWISE GENERATION AND SALE OF POWER TO THE UTILITIES IN SELECTED INDUSTRIES DURING 1997 – 1998 (HAVING INSTALLED PLANT CAPACITY OF 1MW AND ABOVE)

Name of Industry	ELECTRICITY GENERATION AND SALE TO UTILITIES, GWH		
	Energy used In station Auxiliaries	Net energy Generation (14-15)	Energy sold to Utilities
	16	17	18
Aluminium (Primary)	1081.04	9842.15	1100.32
Aluminium (Secondary)	83.24	208.78	0.00
Automobiles	2.98	333.27	92.83
Cement (Primary)	222.46	2815.00	0.00
Cement (Secondary)	0.91	39.54	0.00
Chemicals	275.01	2714.27	0.00
Collieries	24.96	204.15	0.00
Electrical Engg.	12.09	167.75	0.00
Fertilizer	334.64	3998.43	189.97
Food products	1.61	65.40	0.00
Heavy Engineering	3.58	128.32	0.00
Iron & Steel (Primary)	1203.19	6038.14	371.63
Iron & Steel (Secondary)	13.53	391.33	0.00
Jute	3.98	118.85	0.00
Light Engineering	2.77	138.30	0.00
Mineral Oil & Petroleum	197.69	3186.80	104.30
Mining & Quarrying	0.56	20.07	0.00
Miscellaneous	49.68	2117.21	375.68
Non-Ferrous	61.58	993.07	174.74
Paper	212.93	2006.05	0.00
Plastic	1.89	35.99	0.00
Rubber	8.84	194.53	0.00
Sugar	108.06	1692.62	92.04
Textile	159.45	3033.87	40.00
Total	**4066.64**	**39983.99**	**2541.51**

Table-10: INDUSTRYWISE ELECTRICITY GENERATION AND CONSUMPTION IN SELECTED INDUSTRIES DURING 1997 – 1998 (HAVING INSTALLED PLANT CAPACITY OF 1MW AND ABOVE)

Name of Industry	**ENERGY GENERATION AND PURCHASED FROM UTILITIES, GWH**		
	Energy used in the industry out of self generation (16-17)	**Energy purchased from utilities**	**Energy consumed in the industry (18+19)**
	18	19	20
Aluminium (Primary)	8241.83	352.41	8594.24
Aluminium (Secondary)	208.78	142.27	351.05
Automobiles	240.44	581.18	821.62
Cement (Primary)	2815.00	4395.59	7210.59
Cement (Secondary)	39.54	269.37	308.91
Chemicals	2744.27	3239.08	5953.35
Collieries	204.15	1095.67	1299.82
Electrical Engg.	167.75	517.44	685.19
Fertilizer	3808.46	2778.35	6586.81
Food products	65.40	336.69	402.09
Heavy Engineering	128.32	836.83	965.15
Iron & Steel (Primary)	5666.51	5386.57	11053.08
Iron & Steel (Secondary)	391.33	1282.20	1678.58
Jute	118.85	790.98	909.83
Light Engineering	138.30	720.17	858.47
Mineral Oil & Petroleum	3082.50	174.82	3257.32
Mining & Quarrying	20.07	466.46	486.53
Miscellaneous	1741.53	34.81	1776.34
Non-Ferrous	818.33	1711.39	2529.72
Paper	2006.05	834.46	2940.51
Plastic	35.99	0.00	35.99
Rubber	194.63	394.58	589.21
Sugar	1600.58	356.12	1956.70
Textile	2993.87	5790.96	8784.83
Total	**37442.48**	**32588.40**	**70030.88**

Source: Central Electricity Authority, General Review, 1999-2000

2.4.Reforms and restructuring in power sector

The government of india had been actively pursuing for the unbundling and privatization of the state electricity boards and a number of SEB'S have commenced this process. One of the main objectives of the process is rationalization of tariffs and the immediate development is the upward revision of tariffs for all categories of consumers.The power purchase from the IPP's is likely to push the power cost higher and solution to this lies in improving the energy efficiency and adaptation of cogeneration technologies.

2.5.CONCLUSIONS

- From the facts presented in the earlier sections it can be concluded that with the present development plans the gap between the supply and demand of electricity is likely to widen in the near future unless the fast track power plants come on line.
- Because of investment constraints the Government will be looking for private investment and a lot of commercial barriers have to be overcome to encourage large scale private participation.
- Coal will the main energy source for power generation and the environmental impacts of using low grade coals have to be carefully evaluated.
- Some industries like paper can be of the grid through cogeneration and attention has to be paid for such industries

Considering the above issues, Energy efficiency and cogeneration are the suggested tools for overcoming the crisis at least in coming years. Also the Dg sets are under utilized and can be used for cogeneration in a favorable fuel price scenario.

3.0 CO-GENERATION

3.1. INTRODUCTION

Cogeneration denotes any form of simultaneous production of electrical or mechanical energy and useful thermal energy. Cogeneration systems include dual-purpose power plants, waste heat utilization systems and total energy systems.

The fundamental difference between a conventional energy system and a Cogeneration system is that the conventional system produces either electricity or thermal energy and the cogeneration system produces both. In most market sectors, thermal energy is produced through the operation of equipment such as boilers and furnaces and electricity is purchased from a utility(conventional systems).The cogeneration system aims to maximize the power generation by utilizing the energy at the highest possible temperature in a turbine or engine.. By recapturing and using some of the low grade thermal energy that is normally discharged from an engine/turbine, a cogeneration system can reduce system fuel requirements by 10 to 30 percent. Co-generation thus offers significant energy saving potential and hence mitigation of equivalent quantity of GHG emissions.

3.2. Basic cogeneration Concepts:

Technically, there are two fundamental types of cogeneration system, differentiated on the basis of whether electrical or thermal energy is produced first. In a topping system, electricity is produced first and the thermal energy exhausted is captured for further use. In a bottoming system, usable thermal energy is extracted from a waste stream (after it has been used in a process) to produce power, usually for driving a turbine to generate electricity. Both types of systems vary in size and hardware depending on the specific electrical and thermal needs of the user application.

1. Topping system: In a topping system, thermal energy exhausted in the production of electrical or mechanical energy is used in industrial processes. The equipment used to generate the thermal to electrical conversion is a heat engine and the three types of commonly used engines are steam turbines, gas turbines and diesel engine. Topping devices being considered for future cogeneration installations include Stirling engines, fuel cells and thermionic devices.

The fuel flexibility of a heat engine or its ability to operate efficiently using alternate fuels has become increasingly important in recent years as the availability of clean burning fuels such as light oils and natural gas is less certain. One widely used heat engine, the steam turbine has substantial fuel flexibility.

The boiler in a steam turbine system which generates steam through the combustion of fuel can be fired by oil, natural gas, coal, wood, etc. Mechanical energy is produced as the high pressure steam drives a turbine. Through the use of a generator, this mechanical energy is then converted to electricity. The low pressure exhaust from the

turbine can be used for industrial process applications. Figure-3 presents the components of a typical topping cycle .

Instead of generating steam to drive a turbine as a means of producing electricity, the gas turbine and diesel engine both burn fuel directly and use the combustion gases to produce mechanical shaft power which is then used to drive a generator to produce electricity. Currently, these heat engines require oil or natural gas for operation. Dependence on these premium fuels has limited the widespread application of cogeneration systems using gas turbines and diesel engines.

The exhaust from the gas turbines or diesel engine systems can be used for a variety of purposes ranging from process heat to the production of low pressure steam. To generate steam, the hot exhaust gases are passed through a waste heat recovery boiler, where the thermal energy is transferred to water. The gases effectively serve as energy source for the boiler.
The heat recovery system can also be designed to produce high pressure steam from the boiler and can be used to drive a steam turbine producing additional electrical energy. This process is often called a combined cycle.

2. Bottoming system: In a bottoming system, the process is reversed. Fuel is consumed to produce the high temperature thermal energy needed in such applications as a steel reheat furnace, a glass kiln or an Aluminium remelt furnace. Heat is extracted from the hot exhaust waste stream and transferred to a fluid, which is then vaporized. The vapor is used to drive a turbine, which produces electrical or mechanical energy. The closed loop operation is completed when the heat carrier stream is liquefied and pumped back to the waste heat recovery boiler where the sequence is repeated.

Two types of fluid have been used in bottoming systems: water or an organic fluid such as toluene, fluorinol or freon 11. Organic fluids provide greater flexibility because their properties permit operation at temperatures lower than those at which water vaporizes. Moreover they operate with greater efficiency at high temperatures. Figure –2 is a presentation of a typical bottoming cycle.

Fig 2 - Sketch of Typical Bottoming Cycle

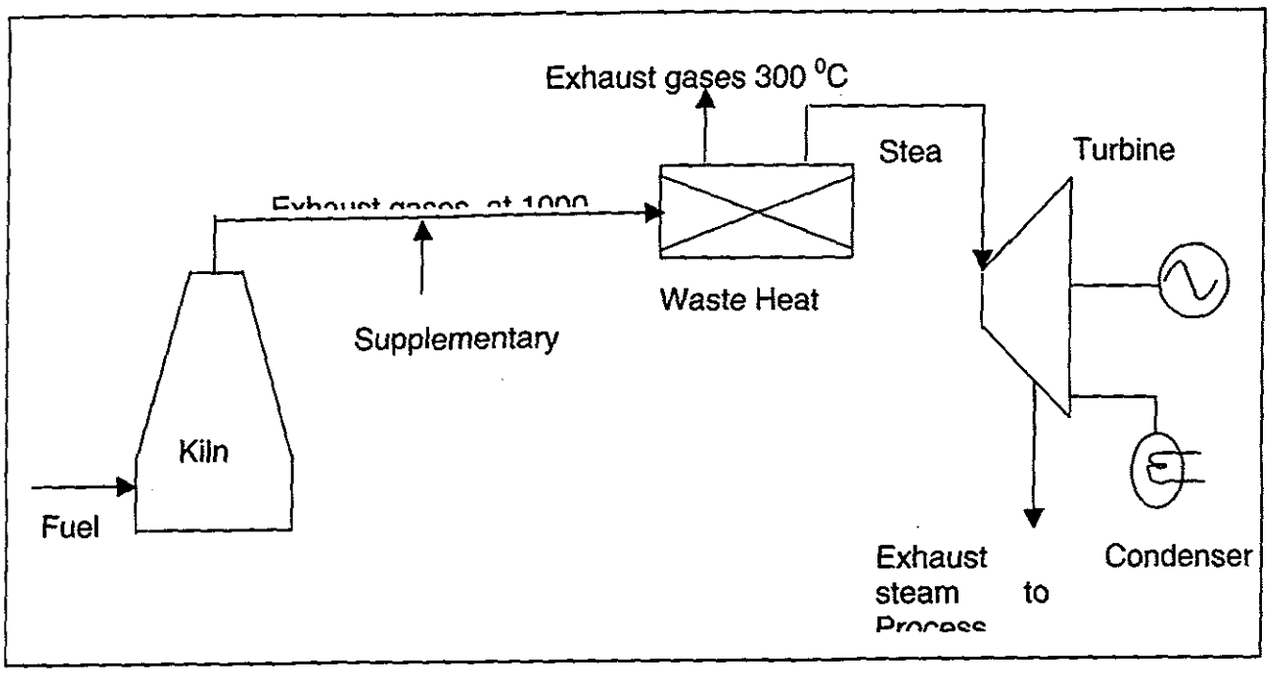

3.3. Co-Generation Processes:

3.3.1.Steam Turbine Cycle:

- Utilization of steam turbine schemes for CHP purposes has been dominating due to the accessibility of inexpensive fuels and the fact that steam has an outstanding energy density and good thermal transmission properties .
- In a steam turbine scheme water is evaporated in a boiler at a high pressure. and the water hereby absorbs energy at a high temperature level. In the turbine the steam pressure is let down yielding mechanical work and the steam is condensed in the following heat exchanger (condenser).The larger the difference between the steam temperature and the condenser temperature the higher will be the power output.

From the energy utilization point of view there is in reality two relevant forms of operation for cogeneration plants using steam cycles and they are

- Back pressure operation
- Extraction / condensation operation

Back pressure operation will be optimal if the pressure of steam from the turbine steam just equals the process demand. Use of back pressure turbines yields the highest overall thermal efficiency . But in this mode, the electrical power production dictates the

heat production and when the heat demand varies e.g., caused by climate conditions or demands for process heat, back pressure operation will not be economically beneficial.

In the extraction/condensation mode of operation, 40% energy utilization is obtained by pure condensation operation and by pure extraction operation approx. 85% of input energy may be utilized. With this type of plant the ratio between electrical and thermal production can be varied continuously with respect to the demands. The system thermal efficiency also varies depending on this ratio.

3.3.2 Gas Turbine based Cogeneration systems
In this system Air is the working fluid for the power generation. Fuel is fired into a stream of compressed air and this stream at a temperature of 900 deg C and the stream passes through the turbine generating power. The heat from the turbine exhaust gas is recovered using a waste heat boiler and steam thus generated is utilized for the process. Without heat recovery gas turbine systems are highly inefficient.

33.3 Diesel Generator systems
In this system also working fluid air is compressed to the high pressures and fuel is fired in the same cylinder in to the stream. The expansion of this high temperature and pressure air produces motive power for generation of electricity. Heat recovery from the exhaust gas can provide process heat.

3.4. Energy Utilisation by Cogeneration:

Co-generation – combined heat and power production – is also designated as CHP (Combined Heat and Power). A typical Power station based on steam without utilization of excess heat – a condensing power station – utilizes 40% of the energy content of the fuel as a maximum, the remaining 60% being lost to the atmosphere . The energy balance for such an operation is presented in figure-3.

Fig-3: Condensing Power Plant

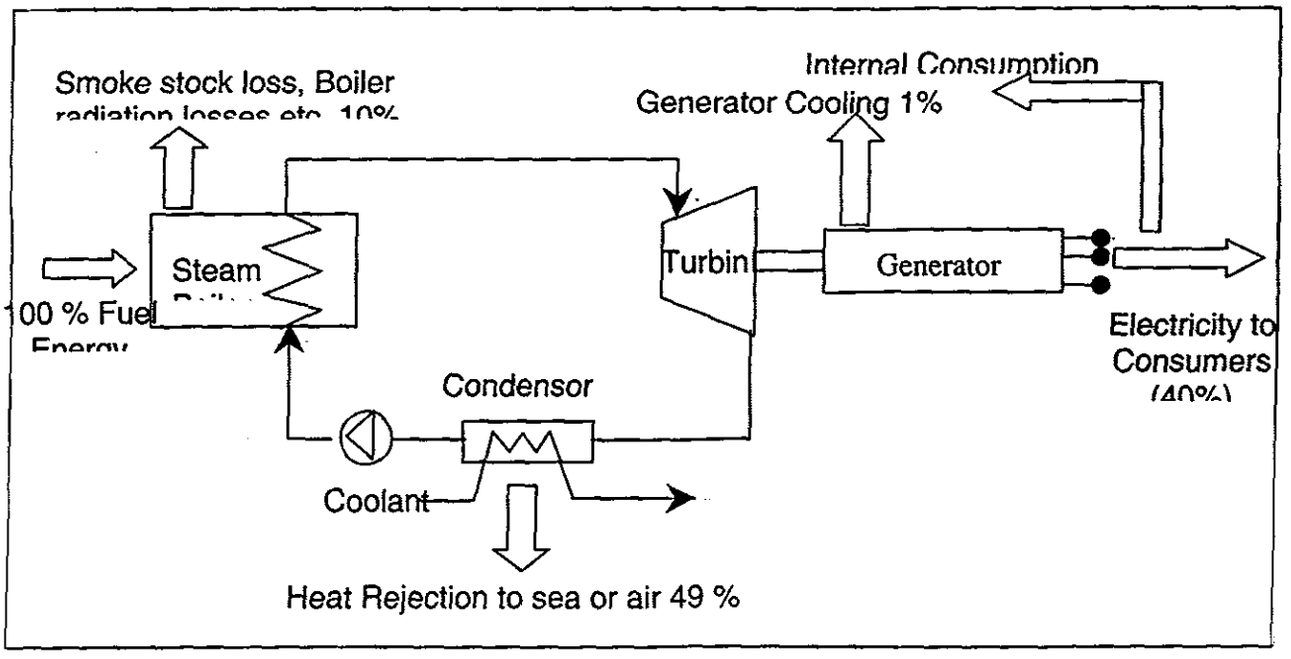

The main reason for the low efficiency is that in a power plant there is no user for the low grade excess heat coming out of the turbine

Where it is possible to utilize the excess heat, like a process industry, the turbine configuration could be a combination of extraction and condensing, as shown in figure-4. With this type of power plant that it is possible to maintain full electricity production when there is no simultaneous heat consumption The energy exploitation here varies between 40% and 70% depending on the quantity of excess heat utilized. The type of co-generation system selected depends on the -heat to power-ratio and also on the load profile of the industry.

Fig-4: Condensing power plant with extraction steam turbine

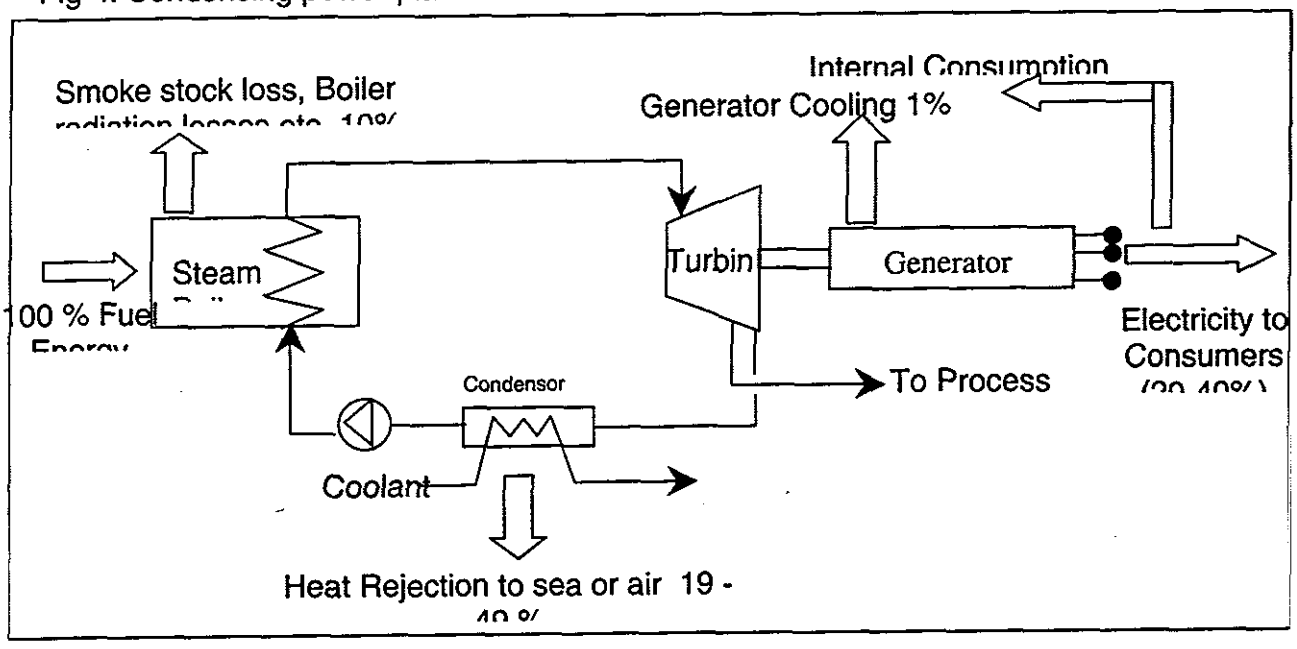

The single largest advantage of the cogeneration plant is its ability to conserve the overall energy requirements, for a specified heat and power demand. The following is an illustration to project the benefit of a hypothetical cogeneration system:

Base case: Without co-generation
Table-11

Plant	Demand Thermal units	Efficiency	Fuel consumption Thermal Units
Heat	100	90%	111
Electricity	60	40%	150

Total fuel consumption: 261 thermal units
Total output: 160 thermal units
Overall efficiency: 61%

Case-2
With Co-generation:

With co-generation the heat plant in the base case is converted into a combined heat and power plant producing both heat and electricity. This modification raises the plant efficiency to 74% and the resultant fuel consumption reduction is about 18%

Table-12

Plant	Demand Thermal units	Efficiency	Fuel consumption Thermal Units
Co-generation Heat Electricity	100 } 40	85%	165
Power plant	20	40%	50

Total fuel consumption: 215 thermal units
Total output: 160 thermal units
Overall efficiency: 74%

3.5. Potential Areas:

Co-generation schemes can most effectively be installed a certain demand of both electricity and heat exists and where an economic evaluation indicates that such an installation will be profitable, i.e., that an economic balance or even a surplus can be achieved with 5 –10 years .Generally cogeneration plants are appropriate for continuous process operations and in small DG based systems batch type industries also adapt co-generation. The cogeneration system configuration largely depends on the steam power ratio .

Typical industries and establishments, which frequently meet these conditions may be:
- Sugar refineries
- Textile factories
- Chemical and pharmaceutical industries
- Paper industry
- Refineries
- Fertilizers

Steam based cogeneration plants are in quite a few of the above industries. Gas turbine based and Diesel engine based cogeneration systems have a recent origin in the industries but are expected to take- off well considering equipment and fuel availability and changing energy prices.

3.6. Thermal Efficiency of Various Co-generation Cycles:

The efficiency of a cogeneration system depends on number of factors and in general larger plants have higher equipment efficiencies . The system efficiency largely depends on the cycle chosen, load profiles, fuel quality and equipment efficiencies. The indicative thermal efficiencies of the most common types of processes are listed below:

1. Steam turbine cycles:

a. Condensing	40%
b. Extraction condensing	75-85%
c. Back pressure turbine	75-85%

2. Diesel engine plants:

a. Only Power production	30-45%
b. Combined heat and power production	70-80%

3. Gas engine plants:

a. Only power production	30%
b. Combined heat and power production	75-85%
c. Dual – fuel engines	35%

4. Gas turbine cycles:

a. Only power production	25-35%
b. Combined heat and power Production, simple cycle	75-85%
c. Combined heat and power Production, combined cycle	90%

4.0 TECHNICAL POTENTIAL FOR CO-GENERATION IN INDIAN NON-SUGAR INDUSTRIES

4.1. Methodology:

4.1.1.The methodology adopted in the evaluation of the technical potential for co-generation in Indian non-sugar industries are as follows.

- Almost all the energy intensive industrial sectors in the organized sector are considered for the evaluation of the technical potential for cogeneration.
- The technical potential has been evaluated based on the general process adopted by most of the units in that particular sector.
- The steam consumption and the electricity consumption are drawn based on the average figures available in the literature.
- In most of the cases the energy norms utilized for the evaluation has been cross checked with the actual study made by 3EC and other consultants in the recent past in some of the typical units of the sector.
- The technical potential is for the entire sector and not on the basis of individual units.
- In few sectors, the evaluation is limited to installed capacities beyond certain basic levels.
- All the possible configurations for the cogeneration has been considered and the evaluation has been arrived at with the most suitable configuration suitable for the sector.
- The final projection of the technical cogeneration potential is based on the overall installed capacity and the present capacity utilization factors.
- In case of steam turbine route, a maximum boiler pressure of 100 Kg per Sq.Cm has been considered. Where it is necessary, boilers with pressures of 60,40 27 and 12 Kg per Sq.Cm were also considered.
- The technical cogeneration potential evaluation has been limited to the continuous process industries. However, in some cases the batch process industrial sectors were also included which has considerable cogeneration potential.

4.1.2.The potential for cogeneration estimated is the maximum possible power generation potential from the given sector. The main basis for the estimate is to make the industry independent of the grid supply. In certain class of industries, the power generation from the process heat-steam or waste gas- could exceed its captive consumption and in such cases the maximum power generation from process heat is taken as the potential.(e.g. pulp and paper) In cases where sufficient power cannot be generated from process heat alone, the captive consumption of the sector is taken as potential and system is designed with provision for power generation in excess of that attainable from process heat.(e.g.tyre).

4.1.3 The sectors for the analysis has been chosen on the following basis:

- Energy intensity of sector has to be high
- The industry should be a continuous process industry

- The cogeneration system should be replicable and easy to implement
- Demand / Availability of sufficient process heat

While estimating the cogeneration potential average specific energy consumption are considered for the industries.

4.2. Sectors considered for evaluation of technical cogeneration potential:

The sectors which are considered for the evaluation of the technical cogeneration potential is given in Table-8.

Table-8: Industrial sectors considered for the evaluation of technical potential for cogeneration:

1. Aluminium	2. Agrochemicals	3. Caustic Soda
4. Cement	5. Dairy	6. Dyestuffs
7. Edible oils	8. Fabric wash – Soaps and detergents	9. Fertilizers
10. Distillery	11. Food processing	12. Organic chemicals
13. Pulp and Paper	14. Pharmaceuticals	15. Refineries
16. Soda ash	17. Iron and Steel	18. Textiles Cotton
19. Chemical – Sulphuric Acid.	20. Tyres	21. Viscose Staple fibre and Viscose filament Yarn
22. Hotels	23. Sponge Iron	24. Chemical-Carbon Black

4.2.1 Analysis of the Industries considered:

A brief description of all the industries considered and the analysis carried out in the evaluation of the technical cogeneration potential and the potential availability is given in the following paragraphs. The discussion of the industrial sectors is based on the potential for the technical cogeneration in the particular sector and the sectors are grouped as follows.

A. Industrial sectors which display cogeneration potential and have exportable power surplus: Under this category, the following sectors are discussed.

1. Pulp and Paper
2. Sponge Iron
3. Refineries
4. Pharmaceuticals
5. Caustic Soda
6. Soda ash
7. Sulphuric acid
8. Carbon black
9. Textiles-VSF & VFY

B. Industrial sectors which display cogeneration potential but do not have exportable power surplus: Under this category, the following sectors are discussed:

1. Cement
2. Textiles – Cotton
3. Iron and Steel
4. Fertilizers
5. Tyre
6. Fabric wash
7. Hotels
8. Distillery

C. Industrial sectors which display cogeneration potential but is difficult to estimate in general or difficult to exploit the potential: Under this category, the following industrial sectors were considered.

1. Aluminium
2. Dyestuff
3. Petrochemicals
4. Diary

The details of the above industrial sectors are discussed in the following paragraphs.

4.3. Pulp and Paper

Introduction: The domestic demand for paper and paperboard is expected to increase from 3.05 million ton in FY98 to 3.6 million ton in FY2001 at a CAGR of 6%. Among the various sub-segments, paperboards are expected to grow above the industry average growth rate, leading to an increase in its share within the paper industry. The domestic demand for newsprint is expected to increase from 0.71 million tpa in FY98 to 0.86 million tpa by FY2001 at a CAGR of 6.5%. The production capacity, no. of units, manufacturing process, major players in this sector, energy consumption scenario, technical cogeneration potential, etc, are discussed in detail in Annexure-1

Cogeneration potential: The technical potential for cogeneration was evaluated and the results are provided in the following table.

Table-8: Technical cogeneration potential according to plant capacity:

PLANT SIZE	CO-GEN POTENTIAL, MW	INTERNAL CONSUMPTION, MW	EXPORT POTENTIAL
300 TPD	22	17.5	4.5
200 TPD	16	12.5	3.5
60 TPD	0.8	1.125	0

There are about 10 plants with about 300 TPD capacity, 20 plants with 200 TPD capacity and about 60 plants with about 60 TPD capacity in India. With this, the total technical potential for cogeneration in the Indian paper sector is estimated as about 600 MW. The internal consumption will be about 480 MW and the export potential is about 120 MW. The existing cogeneration capacity is about 250 MW on the basis of the utilization and hence the effective technical cogeneration potential is about 350 MW.

Conclusion: The installed capacity of the cogeneration system in the paper industry is about 480 MW. The generation through the DG sets is reported to be about 72 MW. It is estimated that the cogeneration potential in the paper mills of more than 60 TPD capacity is about 600 MW with an export potential of about 120 MW. This clearly indicates that the existing cogeneration systems are not optimal and still there is a potential for cogeneration.

4.4. Sponge Iron

Introduction: During the early 90s, sponge iron industry had been specially promoted so as to provide an alternative to steel melting scrap which was increasingly becoming scarce. The production of sponge iron (Direct Reduced Iron - DRI) during the period 1997-98 has been 5.35 million tons. During the last 2 years alone, sponge iron production went up by over 1.1 million ton. Today, India is the second largest producer of sponge iron in the world. The production of sponge iron in the country has also resulted in providing an alternative feed material to steel melting scrap which was hitherto imported in large quantities by the Electric Arc Furnace Unit and the Induction Furnace unit. This has resulted in considerable saving in foreign exchange.

The major players in this sector, production details, energy consumption scenario, technical cogeneration details are given in detail in Annexure-2

Cogeneration potential: It is estimated that about 70000 Nm3 per hour of hot flue gases are let out to the atmosphere from a typical 0.1 million TPA capacity sponge iron plant. It is technically possible to install a waste heat boiler having a pressure of 40 Kg per Sq.Cm and generate steam which can be passed through a straight condensing turbine to generate electricity to an extent of about 8 MW.

On this basis, the total cogeneration potential in the sponge iron plants which are based on coal is about 200 MW and after considering the auxiliary power consumption, the net power generation potential will be about 180 MW. The requirement of the sponge iron mills in this category is about 60 MW and hence there is a potential for export to an extent of about 120 MW.

The existing cogeneration capacity in this sector is very low and only few units have started implementing such schemes recently. The existing cogeneration in this sector may be of the order of about 20 MW.

4.5. Refineries

Introduction: As of October 99, there are a total of 17 Refineries in the country comprising 15 in the public sector, one in the joint sector and one in the private sector. The total capacity of all the refineries is 109.04 million tons.

Keeping in view the need of enhancing the refining capacity to meet the growing demand of petroleum products, a number of grass root refineries as well as the expansion of the existing refineries are at various stages of implementation. As per the latest outlook, the refining capacity is expected to be about 129 million tons by the end of 9th plan and about 167 million tons by the end of 10th plan. The details of the installed capacity, production, major players in this sector, energy consumption scenario, and the technical cogeneration potential are given in Annexure-3.

Cogeneration potential: Most of the refineries produce power through cogeneration and the total installed capacity in this sector is about 750 MW, of which the contribution through steam and gas is about 630 MW and the rest is from DG sets. The net export from this sector is reported to be about 45 Gwh per year.

Though the cogeneration potential has already been tapped in this sector to some extent, there is good potential available to improve the existing efficiency as well as to add on trough the Gas turbine based cogeneration system and the estimated potential is about 300 MW in addition to the existing capacity of 700 MW. However, it is necessary to establish the cogeneration potential with more data from the individual units. The export potential from the cogeneration system will be about 100 MW in addition to the existing export of 104 GWH per annum in 1998.

4.6. Sulphuric Acid:

Introduction: Sulfuric acid is one of the important inorganic acids which is used as raw material in the production of various end products. The total installed capacity of Sulfuric acid is about 5 million tons per annum. Steam as well as electricity is used in the process. The specific steam consumption is about 1.3 tons per ton of Sulfuric acid and the specific electricity consumption is about 23 Kwh per ton of Sulfuric acid. Steam is normally produced from the inherent waste heat available from the process. The

production process, installed capacity, energy consumption pattern, etc. are discussed in detail in Annexure-4.

Cogeneration potential: There is a technical potential to produce steam at a pressure of about 25/40 Kg per Sq.Cm and use it in a back pressure cum condensing steam turbine to meet the steam demand as well as to produce electricity. For the existing installed capacity, there is a potential to generate about 107 MW power as well as to meet the process steam demand by means of a back pressure cum condensing turbine. The net electricity generation will be about 100 MW. The internal consumption will be about 15 MW and the export potential is of the order of 85 MW.

Already many of the units are having the cogeneration system and the present system capacity is only about 35 MW, thus making the technical cogeneration potential at about 65 MW.

4.7. Caustic Soda

Introduction: The total domestic capacity of caustic soda is around 2.408 million tons. Currently, there are around 45 units of which only 10 account for almost two-thirds of the production. Gujarat Alkali Chemicals Ltd is the industry leader. More than 45% of the capacity is located in the western region. The capacity and the production of major producers for the FY 98, manufacturing process, energy consumption scenario, technical cogeneration potential, etc. are given in detail in Annexure-5

The electricity requirement of the sector is estimated to be about 6.500 Gwh and the annual steam requirement is about 0.52 million tons. The electricity requirement works out to an installed capacity of about 740 MW (Assuming 330 days of operation and a capacity utilisation of about 90%). The installed capacity of various units are in the range of 20,000 tons per annum to about 200,000 tons per annum.

Cogeneration potential: On the production capacity basis, these units may require power plants of capacity 8 MW to 80 MW. To meet this requirement in the individual units, furnace oil based generators with waste heat recovery boilers are most suitable and such a system will meet the entire electricity and steam demand of the plant. In addition, in plants with a capacity of more than 50000 TPA, there is a potential for additional steam generation of about 20 TPH at about 12 Kg per Sq.Cm which can be used to produce additional electricity using a condensing turbine. There is a potential to use Gas turbine based combined cycle in the places where gas is available.

On the above basis, the total technical power generation potential is in the range of about 800 MW in the entire sector with a potential to export about 60 MW of power to the grid.

4.8. Soda Ash

Introduction: The total domestic capacity stood at 1.86mn tpa in FY98. Against this the production was around 1.63mn tpa indicating a capacity utilization of 87%. In value terms, the industry stands at Rs1.4bn. The Domestic soda ash sector consists of six major players. Tata Chemicals is the largest among them followed by Gujarart Heavy Chemicals.

The details of the installed capacity, production process, major players in the sector, energy consumption scenario, cogeneration potential are given in Annexure-6

Cogeneration potential: The system considered for the cogeneration is the steam turbine route with an extraction cum condensing turbine. 15% of the total steam require is considered as produced additionally which is allowed to be condensed in the turbine to meet the fluctuations in the energy demand. The total cogeneration potential in this sector is estimated to be about 132 MW. The internal consumption will be about 77 MW, 7 MW being the auxiliary consumption of the cogeneration plant. There is an export potential to the extent of about 55 MW. Already most of the plants are having the cogeneration systems and the capacity of the existing plants is about 35 MW.

Conclusion: There is a good chance of technical cogeneration potential in the Soda ash industries in India. Though they are equipped with the cogeneration systems, it is possible to improve the system efficiency and thereby to produce about 132 MW instead of the existing 35 MW power and export to the grid to the extent of 55 MW.

4.9. Pharmaceuticals

Introduction: Over 20,000 registered pharmaceutical manufacturers exist in the country. The market share of MNCs has fallen from 75% in 1971 to around 35% in the Indian pharmaceuticals market, while the share of Indian companies has increased from 20% in 1971 to nearly 65%. PSUs have almost lost out completely. The details of installed capacity, production process, energy consumption pattern, etc. are discussed in Annexure-7.

Energy consumption pattern: The steam to power ratio varies widely in the manufacture of bulk drugs as well as in the production of antibiotics, sulpha drugs, and other formulations. The variation is from 0.95 to about 13 on the industry to industry basis.

Cogeneration Potential: Due to the wide variation in the process conditions of different pharmaceutical products, the cogeneration configuration is not the same for the entire sector. The two possible cogeneration systems are the steam turbine based one and the furnace oil fired generators with waste heat boilers. In some cases it may be necessary to go in for secondary firing to meet the steam demand where the cogeneration system is based in furnace oil based generators.

The technical cogeneration potential in the pharmaceutical sector in India is estimated to be about 80 MW. The total internal consumption will be of the order of about 60 MW and there is a potential for export to the extent of 20 MW.

4.10. Carbon Black

Introduction: The outstanding black pigment is the versatile product known as carbon black. Carbon black is one of the most important industrial chemical products. Carbon black is considered a petrochemical because it is made from natural gas or petroleum residues. There are several processes involving either incomplete combustion (burning off the hydrogen of a hydrocarbon, such as methane, and leaving the carbon) or by externally applied heat in a furnace, splitting the hydrocarbon into hydrogen and carbon. The details of manufacturing process, major players in the field and the cogeneration potential are discussed in Annuxure-8.

Cogeneration potential: The tail gases released at the end of the process contains considerable heating value and these gases could be used as a fuel in the waste heat recovery boiler and steam may be generated at a pressure of about 27 Kg. per Sq. Cm. The steam could be passed through a straight condensing turbine and the power could be generated.

The power generation potential in a typical 50,000 TPA plant is estimated to be about 7 Mw. The overall technical cogeneration potential in the entire sector is about 30 MW, and the net capacity is 27 MW. The internal consumption will be about 15 MW and the export potential to the grid will be about 12 MW.

4.11. Textiles - Cotton

Introduction: The textile industry may be classified as Spinning Units (production of yarn), Manufacturing Units (Production of Grey cloth) and Composite Mills (Production of Processed cloths).1788 cotton textile industries in India are engaged, producing yarns (Pure & Blended). The Pure Yarns include Cotton, Viscose & others. The Blended Yarns include Polyester–cotton, Polyester – viscose, Cotton – viscose, Cotton – other fibres & others.

The total production capacity of this industrial sector is reported to be about 2.86 million tones during the year 1998. Out of the arrived figure, 2.23 million tones of pure yarns and 0.63 million tones of blended yarns have been produced. The production details, the manufacturing process, the major players in the sector, energy consumption scenario and the technical cogeneration potential are given in detail in Annexure-9

Cogeneration potential: There exists a potential of about 390 MW in the larger capacity mills. Their requirement is nearly 400 MW and hence the cogeneration will meet their own requirement without having any opportunity to export to the grid.

In the case of medium size mills, the technical cogeneration potential is about 230 MW and in the case of other mills the estimated potential is about 190 MW. In total, the technical cogeneration potential in this sector is about 810 MW and there is no potential for the export to the grid.

4.12. Cement

Introduction: India is the largest cement producing country in the world. In spite of the rapid growth in this industry, the per capita consumption of cement in india is still lowest in the world. In India there are 119 cement companies with a production capacity of 107 million tonnes. The Indian scenario presents a view of the complementary role being played by old technological process and the present day mini cement plants as against the energy efficient dry process plants. The Indian cement industry comprises 115 large rotary kiln cement plants and another 300 kilns in the mini cement plants category.The cogeneration potential is assessed only for the larger units The details of the total installed capacity, manufacturing process, major players in this sector, energy consumption scenario, technical cogeneration potential, etc. are presented in Annexure-10

Cogeneration potential: It is estimated that about 2.5 KW generation capacity per TPD installed capacity of the cement plant is possible by the cogeneration. The cogeneration system will fall under the bottoming cycle and the suitable system configuration for the cement sector is presented in the above Annexure.

The overall production of the cement sector is reported to be about 107 million tons, which corresponds to an installed capacity of 300,000 TPD. On this basis, the available technical potential for cogeneration in the Indian cement mills is about 750 MW. However with the present trend of electricity consumption in the cement sector, it requires about 1500 MW installed capacity to meet its own requirement. Hence, there will not be any cogeneration power available for export to the grid.

Conclusion: The installed capacity of captive power in the Cement sector is reported to be about 850 MW. Of the total, diesel and wind forms about 550 MW and the steam based power capacity is about 298 MW. Most of the cement mills are yet to make an attempt to generate power through cogeneration using the waste heat available in the plant. The potential is also more. Though there is no export potential available, the cogeneration system in the Cement industries is expected to reduce the burden of the utilities to some extent.

4.13. Textiles - Viscose Staple fibre and Viscose filament Yarn

Introduction: India is the largest producer of VFY (rayon yarn) and the domestic industry is dominated by the Birla Group. There are seven companies manufacturing VFY in India.

Domestic demand for VSF and VFY have been in tandem with production (details in table below). Demand for VSF and VFY in FY98 was 199,000 ton and 54,000 ton and production in the same year of VSF and VFY was 188,000 ton and 57,000 ton respectively. The details of the production over few years, manufacturing process, major players in this sector, energy consumption pattern, etc. are discussed in detail in Annexure-11.

Cogeneration potential: The total steam requirement for the entire sector is about 4550 TPH and the power requirement is about 490 MW. With the suitable high pressure boiler and the extraction condensing turbine, there is a potential to generate about 1180 MW power from all the units in this sector. The power requirement of this sector is 490 MW and hence there is a potential of about 690 MW for export to the grid. At present some of the units are having the cogeneration systems, but none of the units have fully exploited the cogeneration potential. The details of the individual units need to be studied before arriving at the exact potential in this sector.

4.14. Iron and Steel

Introduction: India is the 10th largest steel producing country in the world. This sector represents around Rs. 90,000 crores of capital and directly provides employment to over 5 lakh of people. The Indian steel sector was the first core sector to be completely freed from the licensing regime and the pricing and distribution controls. This was done primarily because of the inherent strengths and capabilities demonstrated by the Indian iron and steel industry. During 1996-97, finished steel production shot up to a record 22.72 million tonnes with a growth rate of 6.2% while in 1997-98 the finished steel production increased to 23.37 million tonnes, which was 2.8% more than the previous year. The details of the industry profile, production, major players in the sector, production process, energy consumption scenario, self generation , technical cogeneration potential, etc. are given in Annexure- 12.

Cogeneration potential: There is a potential for an integrated steel plant to produce all its power and steam requirements, by utilising only one source of primary energy, namely, coking coal. The system considered for the cogeneration is detailed in the above Annexure.

There is a technical potential of about 300 Kwh per ton of finished steel in an integrated steel plant. The production capacity of the integrated steel mills is about 14.16 million tons per annum. Hence the overall cogeneration potential in the integrated steel mills is about 530 MW. The power requirement of the integrated steel mills work out to about the same and hence the suitable cogeneration system in the integrated steel mills will make them self sufficient thus avoiding their dependency on the grid power

There are few steel plants which have already installed cogeneration systems which are in general sub optimal. As per the available information, the installed capacity of the cogeneration systems in the entire sector is about 1377 MW as of 1997-98. However, the self generation is only to the extent of 7230 Gwh in the year 1997-98, which shows

a capacity utilization of just 65%. The estimated potential in the integrated iron and steel plants need to be verified with the existing systems in the plants under argument.

4.15. Fertilizers

Introduction: Agriculture accounts for a third of India's national income. It provides employment to over 70% of the population. Fertilizers play a key role in improving the crop yield and hence are integral to modern farming.

At present, there are 64 large sized fertilizer units in the country. Of these, 39 units produce urea and 18 manufacture DAP among other fertilizers. Besides the large units, there are 79 medium and small scale manufacturers. The country is self-sufficient to the extent of 92% in case of nitrogen nutrients. Therefore, the government decided to stall any additional capacity in urea.

As of FY2000, the installed capacity of nitrogen (N) nutrients was about 11 mn tons and that of phosphate (P) nutrients was 3.6 mn tons, making India the third largest producer in the world. Production of N&P was 10 mtpa and 3 mtpa respectively while urea production (contains 46% nitrogen) was 18.4 mtpa which is 3.8% higher compared to last year. DAP production declined marginally, by 1%. The overall fertilizer production for the said period increased by 5.3% . Urea being the most affordable fertilizer, dominates the nitrogenous fertilizers, constituting more than 80% of consumption. The details of the installed capacity, major players in the field, manufacturing process and the potential for cogeneration are discussed in Annexure-13.

Cogeneration potential: Technical cogeneration potential is available in the case of naptha based fertiliser units, using the reforming process. Almost all the fertiliser plants commissioned after 1988 have the gas turbine based cogeneration plants which is more efficient when compared with the old systems. The difference in the design generation of power between the two systems is about 0.3 MW per TPD of ammonia. The total capacity of naptha based ammonia plants is about 28400 TPD, of which 11,500 TPD capacity is established after 1988. Therefore, cogeneration potential of 0.3 MW per TPD of ammonia is available in the case of naptha based ammonia plants of capacity 16900 TPD. On this basis, the technical cogeneration potential in the fertiliser sector is about 210 MW.

Conclusion: The installed captive power capacity in the fertiliser sector is about 935 MW. Of the total installed capacity, Gas based power generation forms about 230 Mw and the diesel based power generation is nearly 95 MW. The steam based cogeneration is about 610 MW. This sector still depends on the grid power to the extent of about 2700 Gwh per year which forms about 45% of the total energy consumed in the sector. The additional cogeneration potential of about 210 MW will help this sector to avoid the dependency of the grid power to some extent. However, there is no export potential for power from this sector.

4.16. Tyres

Introduction: The Indian tyre industry is worth about Rs90bn in terms of value in FY2000. In terms of volumes, the industry produced 42.14mn units of tyres in FY2000, at a CAGR of 9.2% in the last decade. The major players in this sector, the manufacturing process and the energy consumption pattern, etc. are given in detail in Annexure - 14

Cogeneration potential: The power requirement of a typical 11.5 lakh number per annum plant capacity is about 7 MW and a generation of 6 MW through cogeneration is appropriate for this plant. The banbury mixer of the tyre plant will take a load of about 1 MW and this load can not be met through the cogeneration system. The cogeneration system considered is a boiler of pressure 60 Kg. per Sq.Cm, with a steam generation capacity of 53 TPH and a back pressure cum condensing turbine.

The estimated net technical cogeneration potential is about 5.5 MW in a 11.5 lakh number per annum capacity plant. On this basis, the total cogeneration potential in this sector is about 110 MW. This estimation is arrived at taking into account the smaller producers and factories which are already having the cogeneration system. The cogeneration potential already tapped is to the extent of about 45 MW. The power generation will be mainly for internal consumption and there will not be any opportunity for export.

4.17. Fabric wash – Soaps and Detergents

Introduction: The fabric wash comprising of laundry soaps, synthetic detergents bars and powder is estimated to be 2.8mn tpa valued at Rs37.5bn (Rs45bn at MRP). This comprises of laundry soaps 0.6mn ton (Rs6bn) and synthetic detergent market of 2.2mn tpa valued at Rs31bn consisting of bars and powders.

Laundry soap market is declining at the rate 5-6% pa, Bars have been growing at 5-6% pa, while the synthetic detergent market is growing at 10-12% pa. As products have same end application, there is cross elasticity in demand for bar and powders. Demand growth for powders will record higher growth with rising urbanization, growing standards of living and greater proliferation of washing machines. The bar will grow on the back of higher rural demand. Concentrate detergent sales are also expected to increase as consumers upgrade in the value chain.

The main raw material for the manufacture of detergents is linear alkyl Benzene and the details of the production capacity, manufacturing process, major players in the sector, energy consumption scenario, technical cogeneration potential, etc. are discussed in detail in Annexure-15.

Cogeneration potential: In the existing LAB manufacturing units, there is a potential to introduce Gas based cogeneration system. The total available technical potential is about 85 MW and there will not be any potential for export.

4.18. *Hotels*

Introduction: Indian Hotels Company Ltd (IHCL) operating under the Taj brand, is the largest hotel chain in the country. EIH operating under the Oberoi brand is the second largest hotel chain followed by ITC Hotels (ITCH). Asian Hotels (AHL), Bharat Hotels (BHL), Oriental Hotels as well as Hotel Leela Venture (HLV) are other major hotels.

Presently, the total 5 & 4-star room capacity in the four metro cities is close to 13,000 rooms. Mumbai and Delhi account for the bulk of the total room availability. In Mumbai room availability is expected to increase by another 3,100 rooms in the next 2-3 years.

The details of the energy requirements, present energy consumption scenario and the technical cogeneration potential in this sector is discussed in detail in Annexure-16

Cogeneration potential: As mentioned earlier, in India there are 13000 rooms in the 5 and 4 star category hotels. The total power requirement of these hotels will be about 85 MW and the entire demand can be met by the furnace oil fired diesel generators with waste heat boilers for the generation of steam. This arrangement will meet the entire electricity demand and the steam demand. However, there will not be any potential for the export of power to the grid.

4.19. Distilleries:

Introduction: The total production capacity of ethyl alcohol is about 11,050 KL per annum. In this industry, biogas is generated from the effluent and the same is used to as fuel in the boiler to generate steam. In about 60% of the units. The steam is generated at 10 Kg. per Sq.Cm and used in the back pressure turbine to generate about 100 KW of power in a typical 40000 liter per annum plant. The details of the production process, installed capacity, major players in the field, etc are discussed in Annexure-17.

Cogeneration potential: A more efficient system is feasible to fully utilize the biogas to meet the steam demand and the electricity demand. The suitable cogeneration system will be a boiler to generate steam at a pressure of 20 Kg. per Sq. Cm. and 2 stage back pressure turbine. The steam pressure from the turbine will be at 1.5 to 2 Kg. per Sq.Cm. In this configuration the power generation potential in a typical 40000 lit. per annum plant is about 214 KW. Thus the overall cogeneration potential in this sector is about 58MW and the estimated capacity existing is about 15MW.

Recently a few distilleries have installed Biogas based cogeneration systems of 1MW capacity and technically their performance and utilization of additional power have to be monitored to conclude on the viability.

4.20. Aluminium

Introduction: The consumption pattern of aluminum in India is different from the global consumption pattern. The demand for the aluminum industry has been predominantly from the electrical sector. This sector is the largest end user of aluminum in India accounting for 36 % of the total aluminum demand. The transport sector contributes to another 22 % of the total demand while the consumer durable and packaging sectors consume 12 % each. The construction sector consumes 7% of the total aluminum demand. Total domestic consumption was about 0.55mn ton in FY98.

On an average Indian smelters consumes 15,000 KWH to 16,500 KWH per ton of aluminum as against 14,000 to 14,500 KWH per ton consumed by global smelters. Nalco is the most efficient producer in terms of power consumption. with a consumption of 15,840 KWH per ton On the other hand, the power consumption of Hindalco is to the tune of 16,503 KWH per ton of aluminum.

The details of the production, manufacturing process, major players in the sector, energy consumption scenario, etc. in the sector is given in Annexure-18

Cogeneration potential: The Indian Aluminium sector is already having captive power plants and the total installed capacity of steam based captive system is about 1408.5 MW and the net energy generation is about 9250 Gwh per annum. The sector as a whole purchase only about 330 Gwh per year and this constitutes about 4% of the total electricity consumed in the sector. On the other hand, the energy exported to the grid is about 1330 Gwh per year.

Conclusion: Since the captive power generation is already established in this sector, there is very little scope for the cogeneration potential. Therefore this sector is not considered in the evaluation of the total cogeneration potential in the Indian Industries (non sugar).

4.21. Dyestuffs

Introduction: The dye and dye intermediaries industry is an important segment of the chemical industry that provides inputs to a large number of industries. This industry which caters to both domestic and global demand is practically self sufficient in terms of inputs. Dyestuffs represent highest development in chemical technology and form a crucial link in the chain of chemical and allied industries.

The production capacity for dyestuffs in India stood at around 80000 tonnes in 1999-2000 (compared to the global capacity of 12.0-13.0mn tonnes). India accounts for around 5 percent of the global output. In terms of numbers there were initially more than one thousand units with 950 units in the small scale sector. Currently there are about 40-50 units in the organized sector and 500-600 in the unorganized after taking into account the closure of many units in this sector due to stricter pollution control laws. The organized sector accounts for around 55,000 tonnes of the total capacity. Thus

organized sector contributes 65 percent while small scale sector (SSI) contributes 35 percent to overall dyestuff production in the country. In terms of location nearly 90 percent of the units are concentrated in Gujarat and Maharashtra. The details of the production capacity, manufacturing process, major players in the field, etc are discussed in Annexure-19.

Technical potential for cogeneration: In this sector, although, simultaneous use of steam and power is employed, the operation is not continuous which will result in the technical problems for the cogeneration systems. Due to the nature of operation of the industries in this sector, the cogeneration will be technically too difficult to be implemented.

4.22. Petrochemicals

Introduction: Domestic demand for petrochemicals has witnessed high growth rates. Demand for polymers (Polyethylene (PE), Polypropylene (PP) and Polyvinyl chloride (PVC)) and polyesters (Polyester filament yarn (PFY) and Polyester staple fibre(PSF)) grew by 21% and 26% respectively in FY98. The installed capacity, major players in the field, production process, etc. are given in Annexure-20.

Cogeneration potential: Most of the petrochemical manufacturing plants are having the cogeneration plants and the major players in this field manufacture diverse products. It will be very difficult to segregate the specific petrochemicals alone and analyze the cogeneration potential. As of now most of the units are having the cogeneration potential and the option available is to identify the efficiency of such systems and analyze the possible technical cogeneration potential on a case to case basis.

4.23. Dairy

Introduction: Indian market size for milk (sold in loose/ packaged form) is estimated to be 33m tons valued at Rs429bn. The market is currently growing at round 4-5% pa in volume terms. It is one of the single largest segments amongst food products.

Milk production is largely concentrated in few states namely Uttar Pradesh, Gujarat, Punjab, Rajasthan and Haryana. Milk production grew by a mere 1% pa between 1947 and 1970. Since the early 70's, under *Operation Flood*, production growth increased significantly averaging over 5% pa.

About 75% of milk which is consumed at the household level is not a part of commercial dairy industry. Milk demand in four large metros is estimated to be 6million liters per day, about 40% of which is supplied by 10 public sector/ cooperative dairy plants. The bulk of the remainder is supplied by the traditional unorganized sector. Loose milk has a larger market in India as it is perceived to be fresh by most consumers. The details of the production, manufacturing process, etc, is given in Annexure-21.

Technical potential for cogeneration: In this sector, simultaneous use of steam and power is employed. However, the operation is not continuous which will result in the technical problems for the cogeneration systems. Due to the nature of operation of the industries in this sector, the cogeneration will be technically too difficult to be implemented.

4.24. Technical cogeneration potential in Indian industries (non sugar)

The technical cogeneration potential available in the Indian industries, the most suitable cogeneration configuration, captive use and the export potential are listed in the following table.

SECTOR	COGENERATI-ON SYSTEM	TECHNICAL COGENERATION POTENTIAL, MW	CAPTIVE USE, MW	EXPORT POTENTIAL, MW	EXISTING COGEN CAPACITY
1. Caustic soda	Furnace oil fired generators with waste heat recovery boilers and turbines	800	740	60	0
2. Cement	Waste heat recovery – Bottoming system	750	750	0	0
3. Fabric wash- soaps and detergents	Gas Turbine	85	85	0	0
4. Fertilizers	Gas Turbine	210(810)	210	0	610
5. Distillery	Steam Turbine with back pressure turbine or Gas turbine with waste heat boiler	43(58)	43	0	15

6. Chemical-Sulphuric acid	Steam turbine with back pressure cum condensing turbine	65(100)	15	85	35
7. Pulp and paper	Steam turbine	350 (600)	480	120	250*
8. Pharmaceuticals	Diesel Engines with waste heat recovery boiler	60(80)	60	20	20
9. Refineries	Gas Turbine based combined cycle	300(1050)	200	100	750
10. Soda ash	Steam turbine	97(132)	42	55	35
11. Iron and Steel	Bottoming System	530(1900)	530	0	1377
12. Textiles – Cotton	Steam turbine	810	810	0	0
13. Textiles - VSF,VFY	Steam turbine	1180	490	690	-*
14. Tyres	Steam turbine	110(155)	110	0	45
15. Hotels	DG sets with waste feat recovery boiler	85	85	0	0
16. Sponge Iron	Bottoming system with waste heat boiler and condensing turbine	160(180)	60	120	20
17. Carbon Black	Bottoming system with waste heat boiler and condensing turbine	27	15	12	0

The overall available technical cogeneration potential in the Indian Industries (non Sugar) may be summarized as follows.

The total technical cogeneration potential : 8759 MW

Cogeneration potential already tapped : 3157 MW

Technical potential left to be tapped : 5602 MW

Export potential available : 1262 MW

Export potential: The export potential through cogeneration is available in the following sectors.

SECTOR	EXPORT POTENTIAL, MW
Caustic soda	60
Chemical-Sulfuric Acid	85
Pulp and Paper	120
Pharmaceuticals	20
Refineries	100
Soda Ash	55
Sponge Iron	120
Chemical-Carbon Black	12
Textiles – VSF & VFY	690
Total	**1262**

Apart from the export potential the cogeneration potential for captive use is about 4665 MW.

Annexure -1

SECTOR: PULP AND PAPER

Introduction

Indian paper industry is broadly classified into paper, paperboards, and newsprint. The paper and paperboard segment constitutes of cultural paper, industrial paper, and special paper.

The mills of earlier period generally had lower scale of operation. The average size increased from 8870 tpa in 1955 to 16000 tpa in 1960. The industry at present is well developed. In 1950 there were 17 mills which increased to 75 in 1975 with an installed capacity of 1.0 million tonnes and by 1995 the number of mills increased to 380 with an installed capacity of 3.9 million tonnes. However about 1.0 MT capacity is idle due to environmental pressures and other constraints like raw materials shortage inability to compete in the open market. Until 1970 the industry was dominated by integrated large paper mills based on forest- based raw materials (viz. Bamboo, hard wood, eucalyptus and reed), and a few small mills using waste paper and imported pulp.

Domestic paper demand has increased from 2.8 million tpa in 1995-96 to 3.05 million tpa in 1997-98 at a CAGR of 4.4%.

The domestic demand for paper and paperboard is expected to increase from 3.05 million ton in FY98 to 3.6 million ton in FY2001 at a CAGR of 6%. Among the various sub-segments, paperboards are expected to grow above the industry average growth rate, leading to an increase in its share within the paper industry.

The domestic demand for newsprint is expected to increase from 0.71 million tpa in FY98 to 0.86 million tpa by FY2001 at a CAGR of 6.5%.

Production Capacity of the sector

Paper industry in India has a long history with the first mill being commissioned in 1832. The number of paper mills in the past with average capacity is as given in Table A.1.1.

Table-A.1.1: Number of paper mills and the installed capacity

Year	No. of Mills	Installed capacity million ton	Avg capacity (ton)
1950-51	17	0.137	8,050
1970-71	55	0.768	13,500
1980-81	137	1.816	11,500
1990-91	325	3.304	10,000

Manufacturing Process

The production of paper is a two –step process

- Fibrous raw material is converted into paper
- The pulp is converted into paper.

Three types of pulp & paper plants

- Pulp mills – which produce pulp as an end product for shipment to other paper – producing plants;
- Paper mills – which produce paper and board from purchased pulp and some times from recycled waste paper: or
- Integrated pulp and paper mills-which combines the features of both the above types.

Typical common unit process in all integrated plants are as follows.

- Fibrous raw material preparation
- Pulping
- Chemical recovery
- *Bleaching*
- Stock preparation
- Paper-making
- Paper machine
- Finishing and converting plant
- *Utilities*
    - *Boilers*
    - Captive power generation
    - *Cogeneration power plants*
- Other sections
    - Lime reburning
- Effluent treatment plant
    - Pre-treatment
    - Primary treatment
    - Secondary treatment
        - Lagoons
        - Activated sludge ponds
    - Tertiary treatment

Energy Consumption Scenario

Paper industry is energy intensive one due to running of large machines and movement of large quantity of fibrous raw material. The major sources of energy for paper production are steam (thermal energy) accounting for 75 to 80 % of total energy requirements with the rest coming from electric power.

Steam requirement is sourced from coal-fired boilers and chemical recycling facilities. Nearly 80% of paper industry's power requirement is met from power grid with the rest coming from DG sets, co-generation facility and other captive sources.
One ton of paper production requires 7.5 to 13 million KiloCalorie of energy. The process usually makes use of around 10-15 ton of steam and 1250-1550 kWH of power for producing one ton of paper.

The exact mix of the two sources of energy for a particular manufacturer depends on factors like type of pulping process (mechanical or chemical process), type of paper produced, type of cellulose raw material used, pulping facility, layout, size of plant etc.

The approximate break up of energy usage at different stages of paper production is given in the table-A.1.2 . The energy consumption pattern differs for small and large paper mills.

Table-A.1.2: Energy usage at different stages of paper production.

Process stage	% of total energy consumption (range)
Chipping	4-6
Pulping	21-30
Stock making	20-25
Recycling chemicals	0-12
Paper making	40-42

The energy usage of small paper mills usually differs (on a higher side) from large mills because of factors like non-usage of chemical recycling facility and lack of wood pulping facility.

The efficiency of Indian paper mills is very low compared to international average. The wastage of energy in Indian paper mills is at a high level of 40% of total energy requirement in comparison to international average of around 20%, due to reasons like poor quality of available coal, lack of recycling facility at small mills, obsolete plant & machinery, etc. Therefore, for each ton of paper produced Indian manufacturers use more total energy compared to international average.

As paper plant location is primarily decided based on proximity to fibrous raw material (eg. wood availability), compromise is made on power cost. The power cost varies from unit to unit as power tariffs differ from state to state. The specific energy consumption norms for different process are given in Table-A.1.3

Table-A.1.3: Specific energy consumption norms.

Particulars	Type of mill: Writing &Printing			Kraft			Boards			Newsprint
	Writing & Printing	A-Based	W-paper	W - based	A-Based	W-paper	W – based	A-Based	W-paper	Large integrated mills
Purchased energy Gcal/ton	9	8.7	4.65	8.3	5.5	3.73	7.5	3.9	4.28	9.5 for w-based 7.5 for Bagasse
Steam t/t	9	5.75	2.8	8.6	4.1	2.3	7	2.2	2.4	4.72
Power kWh/ton	1400	1200	700	1280	650	550	1175	615	685	2000
Water m3/ton	225	200	25	200	40	20	200	60	65	160

Source: CII Report (1991)

Cogeneration

In a large integrated paper mill, large quantities of medium (10kg/cm2) and low-pressure (3.5kg/cm2) steam besides electric power are required. In fact these mills can be 100% self sufficient in power by installing appropriate boilers and turbo generators. Presently the mills have multiple boilers and TG's operating at different steam conditions leading to sub-optimal configuration. On the other hand, the small paper mills do not have cogeneration at all as they do not employ power boilers. Further, most of these boilers are old ones designed for higher grade coal and thus are running at lower efficiencies and capabilities. A number of stoker-fired boilers have been retrofitted with fluidized bed combustion system, which can efficiently burn low-grade coals besides enhancing their capabilities.

These conversions do not help in increasing the steam generating pressure and temperature and thus the potential to generate more power can not be realized. Further, it will require replacing the existing turbo generator by another suitable one. In fact, the optimization of a cogeneration system for self sufficiency in power must be preceded by modernization, upgradation and expansion of pulp and paper making facilities, otherwise any configuration would be only sub-optimal one.

Potential for cogeneration:
Assumptions made in the evaluation of the cogeneration potential:

The assumptions made in the evaluation of the cogeneration potential in the pulp and paper sector is as follows.

- Less than 60 TPD paper plants are not considered due to their low requirement of steam when compared to the electricity requirement

- The paper plants of capacity more than 60 TPD are grouped in to 3 categories as 60 TPD, 200 TPD and 300 TPD.
- The steam consumption and the power requirement for the above 3 categories are assumed as given under Table – A.1.4.

Table-A.1.4: Steam and electricity consumption for different installed capacity mills.

ITEM	PRODUCTION CAPACITY		
	300 TPD	**200 TPD**	**60 TPD**
Steam consumption, Tons per Ton	10	11	3.6
Power Consumption, Kwh per Ton	1400	1500	450
Steam Production, TPH	125	92	9
Power Required, MW	17.5	12.5	1.125

- The cogeneration configuration considered in all the cases are the steam cycle with 100 Kg per Sq.Cm boilers for 200 TPD and 300 TPD plants and 40 Kg per Sq. Cm for the 60 TPD plants. Extraction cum condensing turbine were considered with two extractions at 10 KG per Sq.Cm and 4 Kg per Sq.Cm pressures for the 200 and 300 TPD plants and a back pressure turbine with a back pressure of 4 Kg per Sq. Cm was considered for the 60 TPD plants.
- The considered cogeneration configurations are represented in figures A.1.1 to A.1.3

Technical Potential For Cogeneration

Based on the above assumptions, the technical potential for cogeneration was evaluated and the results are provided in the following Table A1.5.

Table - A1.5

PLANT SIZE	CO-GEN POTENTIAL, MW	INTERNAL CONSUMPTION, MW	EXPORT POTENTIAL
300 TPD	22	17.5	4.5
200 TPD	16	12.5	3.5
60 TPD	0.8	1.125	0

There are about 10 plants with about 300 TPD capacity, 20 plants with 200 TPD capacity and about 60 plants with about 60 TPD plants in India. With this, the total technical potential for cogeneration in the Indian paper sector is about 600 MW. The internal consumption will be about 480 MW and the export potential is about 120 MW.

Fig : A.1.1Cogeneration configuration for a typical 300 TPD Pulp & Paper Plant

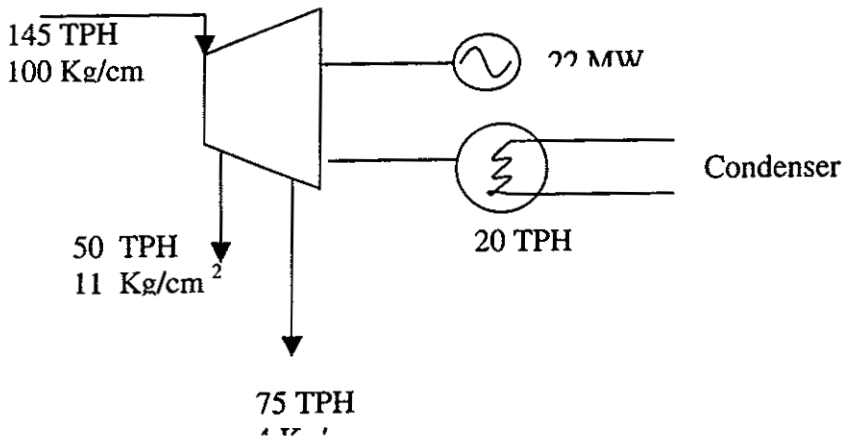

Fig : A.1.2

Cogeneration configuration for a typical 200 TPD Pulp & Paper Plant

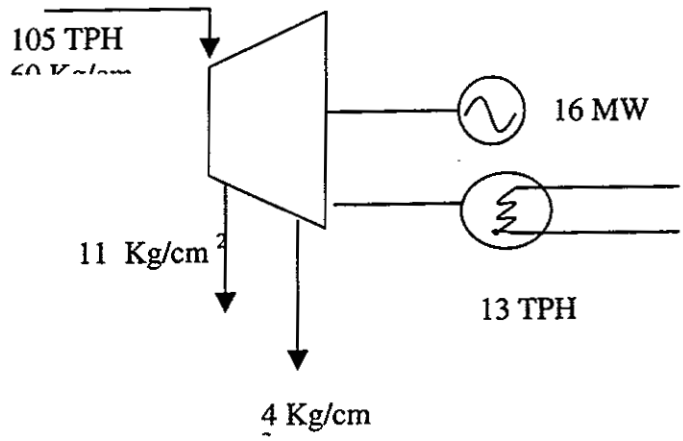

Fig: A.1.3

Cogeneration configuration for a typical 60 TPD Pulp & Paper

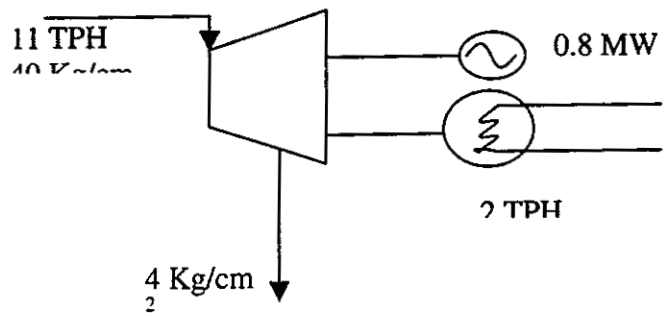

Fig-A.1.4: PROCESS FLOW

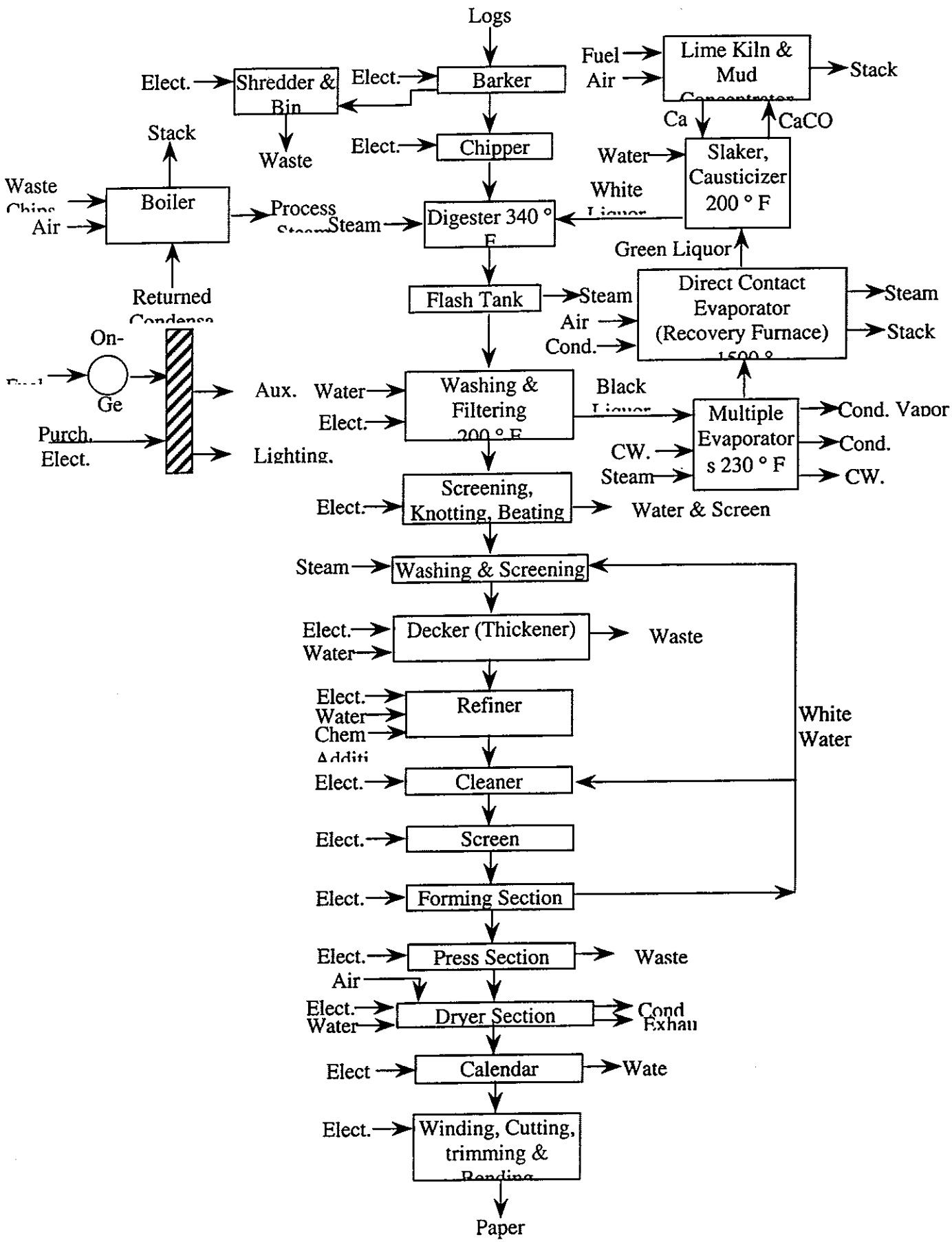

Fig-A.1.5: PULP MILLS – PROCESS FLOW

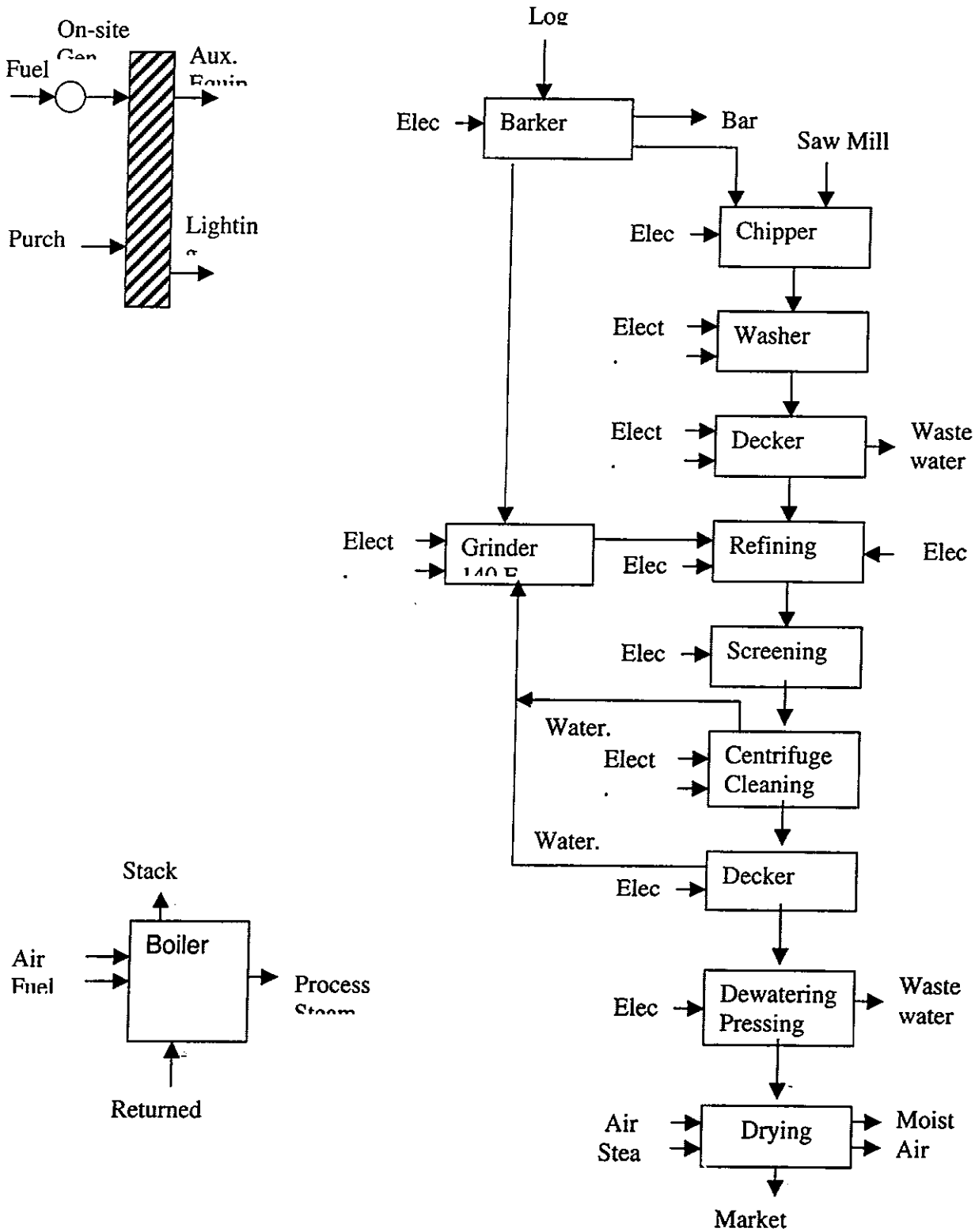

SECTOR: SPONGE IRON

Introduction

During the early 90s, sponge iron industry had been specially promoted so as to provide an alternative to steel melting scrap, which was increasingly becoming scarce. At present there are 23 units in India with a total installed capacity of about 6 million tons. Of the total number of units, 20 are coal based with a production capacity of 2.5 million tons and 3 are gas based with a production capacity of 3.5 million tons. The typical size of the medium units are in the range of 1 to 3 lakh tons per annum. The large units have a capacity of 1 to 2 million tons per annum.

Production

The production of sponge iron (Direct Reduced Iron - DRI) during the period 1991-92 to the present was as in Table - A2.1

Table - A2.1: Production of Sponge Iron:
(Quantity in million tonnes)

Year	Production	% Increase
1991-92	1.31	-
1992-93	1.44	9.9
1993-94	2.40	66.7
1994-95	3.39	41.3
1995-96	4.40	29.8
1996-97	5.01	13.8
1997-98	5.35	6.78
1998-99 (Apr-Dec)	3.85	-

During the last 2 years alone, sponge iron production went up by over 1.1 million tonne. Today, India is the second largest producer of sponge iron in the world. The production of sponge iron in the country has also resulted in providing an alternative feed material to steel melting scrap which was hitherto imported in large quantities by the Electric Arc Furnace Unit and the Induction Furnace unit. This has resulted in considerable saving in foreign exchange.

Energy consumption Scenario

Electricity is consumed to the extent of about 150 Kwh per ton of sponge iron production. In addition coal is used to meet the thermal energy requirements of the coal based sponge iron units and gas is used in the gas based plants. The flue gases from the kiln is let out at a temperature of about 900 to 1050 deg.c in most of the coal based sponge iron units. In the case of most of the gas based sponge iron plants, the flue

gases are utilised for power generation using waste heat boiler and suitable steam turbines.

The overall requirement of electricity in the case of coal based sponge iron units is about 50 MW.

Cogeneration Potential

Assumptions made in the evaluation of the technical cogeneration potential:

The following assumptions were made while evaluating the technical potential for cogeneration.

- The coal based sponge iron units only were considered in the evaluation of the cogeneration potential in this sector.
- The hot gases from the kiln are generally let in to the atmosphere at a temperature of about 1000 deg. C.
- The cogeneration configuration considered is a bottoming system with a waste heat boiler and a suitable steam turbine to generate electricity. The waste heat boiler will utilise the waste heat available from the kiln. The schematics of the considered cogeneration system for a 0.1 million TPA capacity sponge Iron plant is represented in Fig : A.2.1.

Fig : A2.1 Co-generation configuration for a typical 0.1 millions TPD Sponge Iron mill

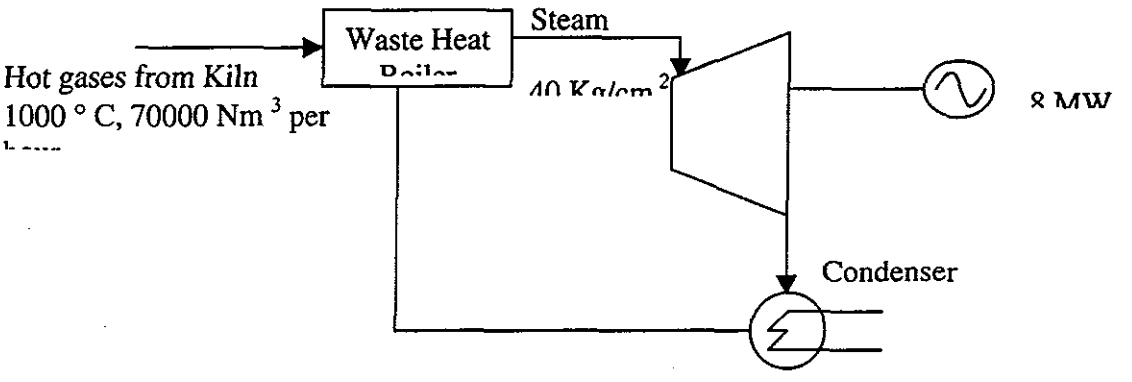

Technical Cogeneration Potential

It is estimated that about 70000 Nm3 per hour of hot flue gases are let out to the atmosphere from a typical 0.1 million TPA capacity sponge iron plant. It is technically possible to install a waste heat boiler having a pressure of 40 Kg per Sq.Cm and generate steam which can be passed through a straight condensing turbine to generate electricity to an extent of about 8 MW.

On this basis the total cogeneration potential in the sponge iron plants which are based on coal is about 200 MW and after considering the auxiliary power consumption, the net power generation potential will be about 180 MW. The requirement of the sponge iron mills in this category is about 60 MW and hence there is a potential for export to about 120 MW.

The existing cogeneration potential is very low and only few units have started implementing such schemes recently. The existing cogeneration in this sector may be of the order of about 20 MW.

Conclusion

There is a good potential for cogeneration in the Indian sponge iron sector which are based on the coal and the technical potential, internal consumption and the export potential are as listed below.

Technical cogeneration potential (net)	: 180 MW
Internal consumption	: 60 MW
Export potential	: 120 MW

Annexure-3

SECTOR: REFINERIES

Introduction

The Indian hydrocarbon sector is now undergoing a transformation from operating under administered prices to a market driven pricing mechanism. This change has come about when the global refinery outlook is not very optimistic. Given the economic slowdown, even demand growth in India has slowed down. As of October 99, there are a total of 17 Refineries in the country comprising 15 in the public sector, one in the joint sector and one in the private sector. The total capacity of all the refineries is 109.04 million tons. The company wise locations and capacity of the refineries as on 1.10.99 are summarized In Table A3.1.

Table A.3.1

Sl. No.	Name of the company	Location	Capacity, million tons per annum
1	Indian Oil Corporation Ltd. (IOC)	Guwahati	1
2		Barauni	4.2
3		Koyali	12.5
4		Haldia	3.75
5		Mathura	7.5
6		Digboi	0.065
7		Panipat	6
8	Hindustan Petroleum Corporation Ltd. (HPCL)	Mumbai	5.5
9		Visakh	4.5
10	Bharat Petroleum Corporation Ltd. (BPCL)	Mumbai	6.9
11	Madras Refineries Ltd. (MRL)	Chennai	6.5
12	Cochin Refineries Ltd. (CRL)	Cochin	7.5
13	Bongaigaon Refinery and Petrochemicals Ltd. (BRPL)	Bongaigaon	2.35
14	Crude Distillation unit of MRL	Narimanam	0.5
15	Numaligarh Refineries Ltd. (NRL)	Numaligarh	3
16	Mangalore Refineries and Petrochemicals Ltd. (MRPL)	Mangalore	9.69
17	Reliance Petroleum Ltd. (RPL)	Jam nagar	27
Total			109.04

Keeping in view the need of enhancing the refining capacity to meet the growing demand of petroleum products, a number of grass root refineries as well as the expansion of the existing refineries are at various stages of implementation. As per the latest outlook, the refining capacity is expected to be about 129 million tons by the end of 9th plan and about 167 million tons by the end of 10th plan.

The Refining Process and Technologies

Crude oil is a mix of hydrocarbons, and refining process involves the breaking up of crude oil into a number of products with varying arrangements of atoms of hydrogen and carbon. The refinery process can be bifurcated as under.

- Primary processing
- Secondary processing

Primary Processing

The components of crude oil, which have to be broken up, have different boiling temperatures. Primary processing involves heating of crude oil up to a maximum of about 430º C and subsequent vaporizing of each of the components. The main part of the primary processing unit is the fractionating tower/ crude distillation unit, which is a tall and a cylindrical column through which a mixture of hot vapor and liquid crude is allowed to pass. The lighter compounds/ fractions are collected at the top of the tower and the heavier components are pushed down. The fractionating tower consists of a number of trays filled with special contacting devices and each of the fractions with varying boiling temperatures flow down the respective trays through a cooling process. The compounds, which are normally fractionated from distillation, are Gas & LPG, Naphtha, SKO and HSD. All products except SKO & HSD would require further treatment. The liquid that is not vaporized flows down as atmospheric residue.
The atmospheric residue, which flows out of the fractionating column, is then heated in the range of 400ºC-600ºC and passed into a High Vacuum Column (HVU). The atmospheric residue is broken up to VGO (Vacuum Gas Oil) and VAC residue (also known as Short residue). VGO is the feed for secondary processing and VAC residue is used for manufacture of FO, LSHS and Bitumen.
The typical boiling ranges of each of the fractions of crude oil are given in Table A3.2.

Boiling Ranges of Each of The Fraction of Crude Oil
Table A-3.2

Fraction	Boiling Range(º C)
LPG	Up to 30
LAN	30-100
HAN	70-170
SKO	140-260
HSD	180-380
VGO	350-600
VAC Residue	550+

Secondary processing

As stated earlier, some of the products separated through distillation do not match product standards and further processing is required to render the product marketable. This is done through product specific processes like Catalytic Reforming, Amine Treating, Hydro treating, Alkalization etc.
In addition, the VGO produced by HVU needs further processing to manufacture more value-added products. This is done through either addition of Hydrogen or through carbon rejection.
"Cracking" is a process, by which the larger molecules of heavier products are broken into smaller molecules, thereby proportionately increasing the lighter fractions. Hydro-cracking, Catalytic cracking and Thermal cracking are more popular and widely used than other processing methods though the actual method would depend on the quality of crude and the required yield pattern.
Vis-breaking (Viscosity Breaking or VB) is an important application of Thermal Cracking used to produce FO of lower viscosity while increasing the proportion of light products. The VAC residue needs further processing either through Vis-breaking to produce FO of acceptable quality or can be hardened to be sold as Bitumen.
In India, secondary processing facilities are available in 7 refineries, of which IOC Koyali only uses both the Hydro-cracking and the Catalytic cracking method. All other refineries use the carbon rejection process.

Table A.3.3 Refinery crude throughput and production (thousand tonnes) of petroleum products

Parameter	1993/94	1994/95	1995/96	1996/97	1997/98
Crude throughput	54296	56534	58741	62870	65166
Production	51084	52927	55081	59005	61308
Refinery losses	3212	3607	3660	3865	3858
Losses(%)	5.9	6.4	6.2	6.1	5.9
Refinery capacity utilization (%)	102.9	105.9	104.2	104.1	105.9

The Refining capacity as of 1998-99 was 62.2 million tons, actual crude through put was 68.5 million tons and the capacity utilization was 110.1%.

Energy Utilisation

Steam consumption for refineries varies from 0.225 to 0.250 tons/ton of crude handled for indigenous crude. For other crude the ratio is 0.75. Power consumption varies from 10 to 25 kwh/ton of crude handled for indigenous crude. For other crude the ratio is about 50 kwh/ton.

A Model Total Energy Scheme for Refinery is as follows

Capacity of the Refinery	:	2.5 million Tons
Total Power requirement	:	126 million units
Total Steam requirement	:	1.8 million Tons

CoGeneration Potential

The refinery operations are quite complex and the product mix, crude utilized varies significantly between installations. Also the plant design and power generation configuration changes significantly between different units. Hence it is difficult to project a general module for all the refineries. Recent designs incorporate gas turbines for Power generation. The general data collected indicates export potential 100 MW however this potential will be confirmed with plant visits during phase – 2.

Annexure-4

SECTOR: SULPHURICACID

Introduction

Sulphuric acid is very important industrially, and has many uses including the production of potassium phosphate, calcium superphosphate etc.,these fertilizers provide plants with one of the important elements of nitrogen, phosphorous, or potassium (NPK). In the making of artificial silks like rayon, Sulphuric acid is used whereby the fine threads in the alkaline cellulose solution are neutralized by passing them through a bath of Sulphuric acid. Sulphuric acid is also used in the manufacture of non-soapy detergents, modern detergents are organic compounds 'sulphonated' with concentrated Sulphuric acid.

Sulphuric acid is also to remove the surface metal oxide e.g. iron (III) oxide. This process is called pickling and it is important in preparing articled for electroplating. Sulphuric acid is also used as an electrolyte inside car batteries, most car batteries are made up of lead plates in a Sulphuric acid electrolyte, occasionally, the electrolyte needs to be "topped up" with distilled water; this is because small amounts of hydrogen and oxygen gases are given off by chemical changes inside the battery, and thus the Sulphuric acid loses water and becomes too concentrated.
Besides the above mentioned, Sulphuric acid is also used in the manufacture off drugs, paints, dyes and many other chemicals.

The Selected Produces And Production Capacity Of Sulphuric Acid Is Given in Table-4.1

Table-4.1

Company	Production (th MT) 1997-98
Dharamsi Morarji	436.4
Hindustan Zinc	241.0
Hindusthan Copper	89.5
MTZ(India)	35.5
Aarti Industries	50.0
Nirma	78.2
National Rayon/NRC	51.5
Oriental carbon	29.4
Century textiles	51.1
SFL Industries	52.2
Variender agro chemicals	58.8
Indian link chain	NA
Shree acids	53.9
Gujarat state fertilizers	101.6

Manufacturing Process

1. Combustion of Sulphur

Sulphur is obtained from natural deposits or from the desulphurisation of natural gas or crude oil. Before combustion it must be melted by heating to 135°C. Combustion is carried out in one-stage or two-stage Sulphur combustion units at between 900 and 1800°C. The combustion unit consists of a combustion chamber followed by a process gas cooler. The SO_2 content of the combustion gases is generally around 18% by volume and the O_2 content is low (but higher than 3%).
The gases are generally diluted to 9-12% SO_2 before entering the conversion process. The SO_2 content of the gases is very stable with time.

2 Roasting of pyrites

Many kinds of furnaces are used for the roasting of pyrites (iron Sulphide), such as multiple-hearth furnace, rotary kiln, fluid bed roaster, etc.
The SO_2 content of gases is generally about 15% and the O_2 content is zero but the SO_2 content in the gases may vary with time due to the heterogeneous character of the raw material. Normally, pyrites is homogeneous with respect to Sulphur and moisture content and the granular composition is very stable.
The gases are always treated in a high efficiency dust collector (often an electro-static dust collector) and diluted to 8-10% SO_2 before entering the conversion process.

Metal Sulphide (other than pyrites) roasting

Many metal Sulphides other than pyrites, produce gases containing SO_2 when roasted during metallurgical processes. The Table-4.2 gives data for the principal metal Sulphides.

Table-4.2

Production of Sulphuric Acid	Raw Gases		Process Gases
	SO_2 %	O_2 %	SO_2 %
ZnS containing ores	6-10	6-11	6-10
CuS containing ores	1-20	8-15	1-13
PbS containing ores	2-6	15	2-6
Sintering	7-20	15	7-1
Other smelters	0.5-1.5	15	0.5-1.5
MoS containing ores	variable	variable	Variable

4. Single contact process (single absorption)

The contact process without intermediate absorption is nowadays only used in new plants to process gases with low and widely varying SO_2 contents. The SO_2-containing gases, which have been carefully cleaned and dried, are oxidised to sulphur trioxide in the presence of catalysts containing alkali and vanadium oxides. The SO_3 is absorbed in sulphuric acid in absorbers where it is converted to sulphuric acid by the water in the absorbing acid. The absorbing acid is kept at the desired concentration of approx. 99%wt by the addition of water or dilute sulphuric acid. Figure 4.2 shows the flow diagram of a typical single-contact process plant.

The single contact process is generally used with SO_2 content inlet gases of 6-10%. In new plants, the conversion efficiency is about 98.5% as a daily average. In existing plants, it is difficult to obtain better than 98.0% conversion, although in some plants, a conversion efficiency of 98.5% can be achieved. 99.1% is reputed to be the absolute maximum performance. The conversion rate is 97.5-98.5% for feed gases with only 3-6% SO_2.

5. Double contact process (double absorption)

A primary conversion efficiency of 80%-93% is obtained in the double contact process, depending on the arrangement of the contact beds and the contact time in the primary contact stage of a converter preceding the intermediate absorber. The gases are cooled to approx. 190°C in a heat exchanger and the SO_3 already formed is absorbed in sulphuric acid with a concentration of 98.5-99.5%wt in the intermediate absorber. The intermediate absorber is preceded by an oleum absorber if required. The absorption of SO_3 produces a considerable shift in the reaction equilibrium towards the formation of SO_3, resulting in considerably higher overall conversion efficiencies when the residual gas is passed through one or two secondary contact beds. The SO_3 formed in the secondary stage is absorbed in the final absorber. Feed gases containing 9-12% of SO_2 are generally used for this process. The conversion efficiency is about 99.6% as a daily average, based on sulphur burning. Figure 4.3 shows the scheme of a sulphuric acid plant (double catalysis) based on sulphur combustion.

6. Pressure contact processes

Pressure Contact Processes have been developed in which the sulphur combustion, SO_2 conversion and SO_3 absorption stages are all carried out at elevated pressure because the oxidation of SO_2 is favoured by pressure. The concept of operating a contact process under pressure is not new but so far, it has only been embodied in one industrial double-absorption plant in France with a capacity of 550-575t/d H_2SO_4. The maximum pressure in this plant is 5bar and it first came into operation in 1972.

Two special advantages have been claimed for the pressure contact process compared to the conventional double-absorption process

1) The position of the chemical equilibrium in the SO_2 oxidation reaction is more favourable, allowing a higher conversion efficiency to be attained with a reduced amount of catalyst. The plant is reported to have achieved 99.8-99.85% conversion. The tail gas SO_2 content is reported to be reduced to about 200-250ppmv. However, the high temperatures in the sulphur furnace increase the rate of nitrogen oxide formation.
2) Smaller equipment can be used on account of the lower operating volumes of the converter gases. This reduces materials and site area requirements and raises the capacity limit on shop-fabricated equipment. The resulting capital cost savings are said to be about 10-17% in comparison with the current double-absorption plants. However, in some countries these savings would be nullified by the cost of conforming with the requirements for extra wall thickness and higher-grade materials of construction laid down in the safety regulations relating to pressure vessels.
The principal disadvantages of the pressure contact process in comparison to the conventional double-absorption process are that it consumes more power and produces less steam.

7. Wet contact process (WCP)

This process is not sensitive to the water balance and has been used to treat off-gas from a molybdenum smelter as well as being installed in two plants. An earlier version of the WCP technology was used to treat lean hydrogen sulphide gases. The sulphurous components in all the gas feeds are converted to acid without the need to dry the gas first.
The off-gas is cleaned in a standard purification system and then fed through a blower, which provides the pressure necessary to overcome the pressure-drop across the system. The gas is pre-heated initially in the tower and secondly in a heat exchanger. It is next fed to a converter, where SO_2 is oxidised over a catalyst to SO_3. A cooled reactor or an adiabatic reactor is used, depending on the conditions.
SO_3-containing gas is then cooled in a gas-gas heat exchanger where part of the SO_3 reacts with the water vapour in the gas to form sulphuric acid vapour. , the sulphuric acid vapour is condensed and concentrated, without acid mist formation, in a multi-tube falling-film condenser. The cooling is provided by the cold feed-gas supplied to the shell side.
The only utilities required are cooling water for the acid coolers, electricity for the blower and fuel to enable autothermal operation if the feed gas contains below about 1.5-2.0% SO_2.
The Wet Contact Process is used with feed-gases containing 0,05-7% SO_2 and the conversion efficiency is around 95-98% as a daily average.
Figure 4.4 shows one possible technical form of use of the Wet Contact Process for producing 96% sulphuric acid from the incineration of H_2S gases.

8. Process based on NOx

The Modified Lead Chamber Process (MLCP) is able to treat gases with a low content of SO_2 from 0.5-8%, as well as gases containing a mixture of SO_2 and NOx. The process is a development of lead chamber technology in which oxides are used to promote sulphuric acid production directly from sulphur dioxide, through the formation of the intermediate, nitrosyl sulphuric acid. This process which was widely used in the early 1900s has been largely superseded by the Contact Process but modifications introduced at the end of the 1970s mean it is now under consideration for cleaning the off-gases from power plants or ore roasting plants.
The SO_2 containing gas is fed through a de-nitrification system after dust removal and purification. There are two elements in the process, the Glover tower and the de-nitrification system or stripper. The purified gas containing the sulphur dioxide is used as the stripping gas to remove the nitrogen oxides from the sulphuric acid. The sulphuric acid is fed into the Glover tower where the bulk of the nitrogen oxides are removed from the acid and then into the stripper where the final traces are removed. The sulphur dioxide gas passes first through the stripper and then through the Glover tower. Sulphur dioxide is absorbed from the gas stream in 59-66% sulphuric acid in a packed tower. The gas flow is counter-current to the liquid flow in both the Glover and absorption towers.

Cogeneration Potential

The Cogeneration potential is as shown in the Fig - 4.1

Fig 4.1 Sulphuric Acid - Cogeneration Option

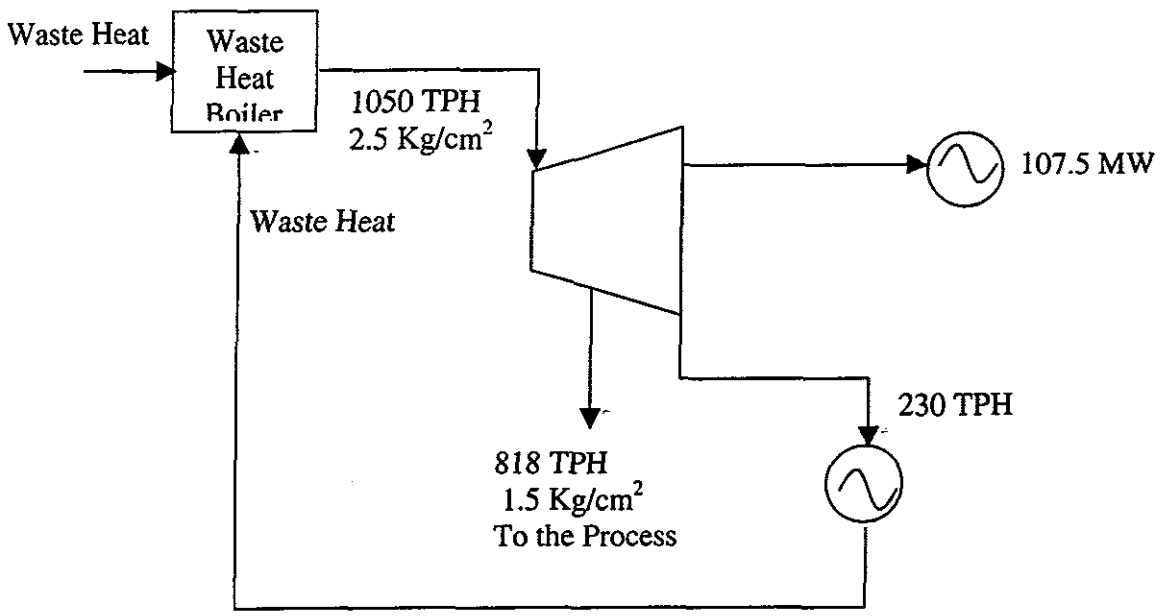

Fig -4.2 Sulphuric Acid Plant – Single Absorption Based On Roasting.

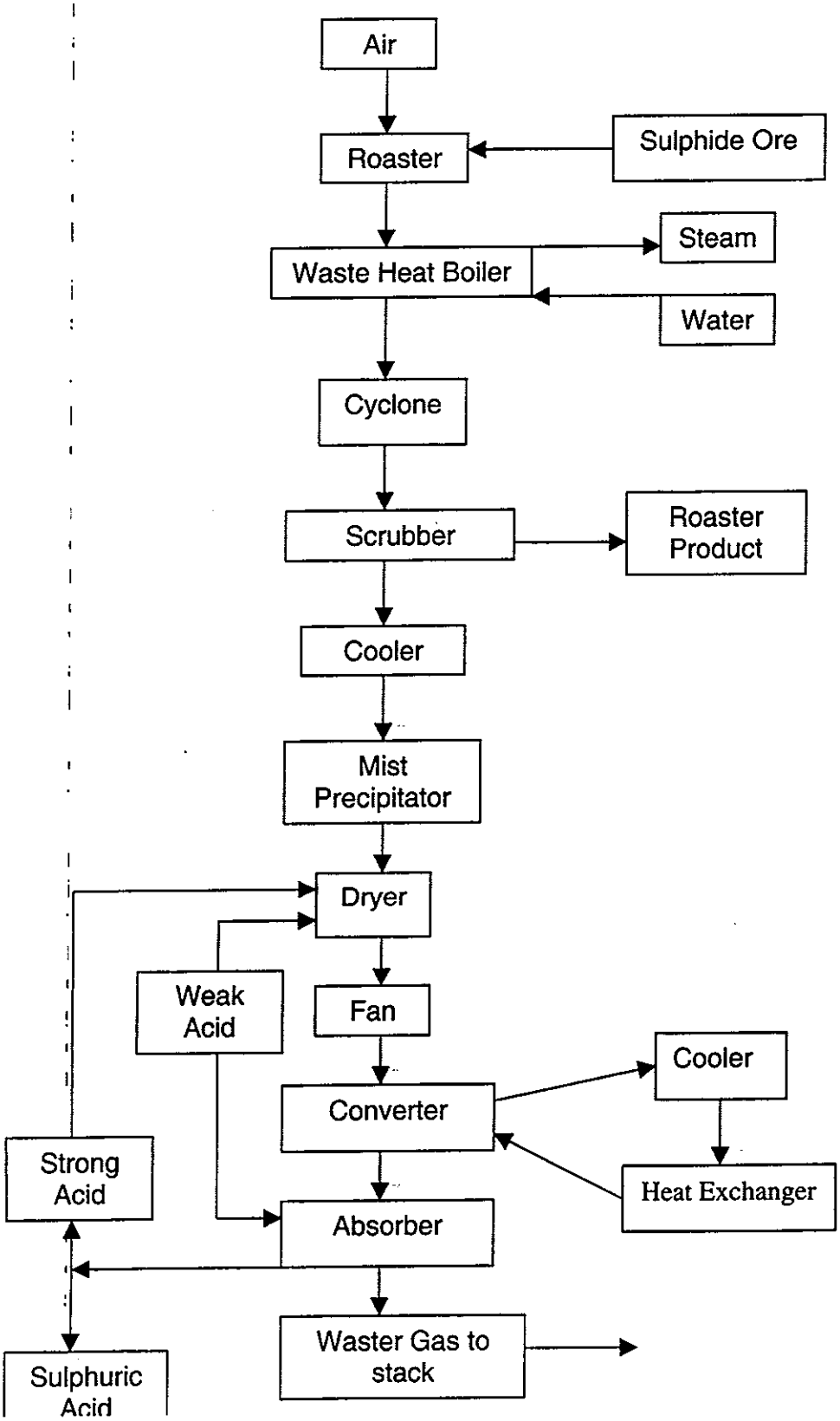

Fig- 4.3 Sulphuric acid plant – double absorption.

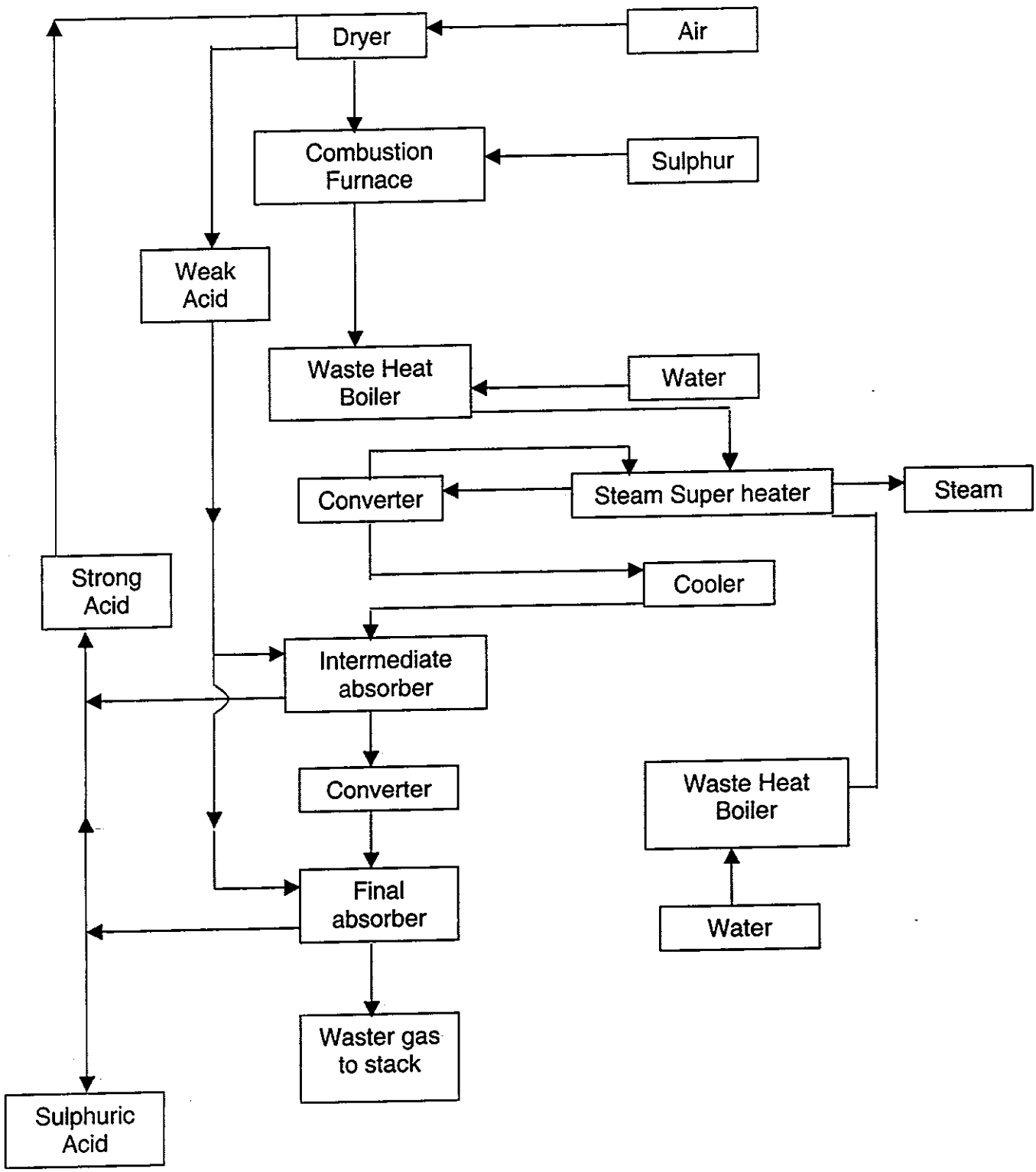

Fig- 4.4 Sulphuric Acid – Plant Single Absorption.

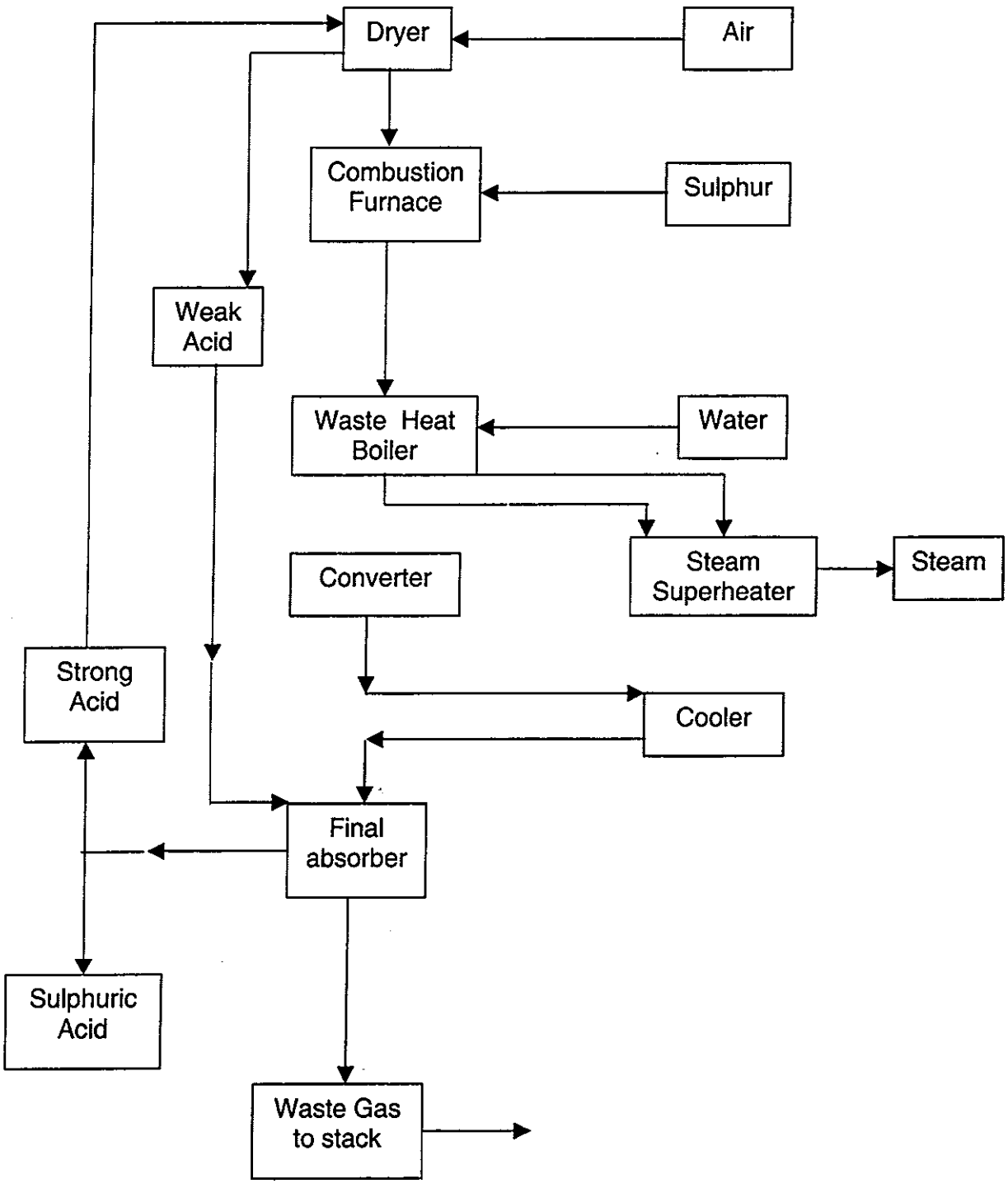

Annexure -5

SECTOR: CAUSTIC SODA

Introduction

Caustic soda and chlorine are co-products, which are generated in the ratio of 1:0.88. Caustic soda is produced by electrolysis of salt. Power and salt form the key inputs. Caustic soda is generated in liquid form. It is then dried to obtain solid form.
Uses of chlorine are completely different from uses of caustic soda, thus user industries of these two commodities differ in a major way. Paper & pulp industry is the largest single user sector of caustic soda in India. Caustic soda is also used In manmade fiber industry and in the manufacturing of soap. Apart from these industries it is also used in other industries such as chemical, water treatment, etc.

Industry Profile

The total domestic capacity of caustic soda is around 2.408mn ton. Currently, there are around 45 units of which only 10 account for almost two-thirds of the production. GACL is the industry leader. More than 45% of the capacity is located in the western region. The capacity and the production of major producers for the FY 98 is given in Table-A.5.1.

Table-A5.1: Capacity and production of major producers(FY98)

Company	Location	Capacity	Production
		('000tpa)	('000ton)
GACL	Gujarat	170	146.9
Grasim industries	MP	198	129.7
Modi Alkalies	Rajasthan	84	70.65
Punjab Alkalies	Punjab	84	73.76
DCW	Tamil Nadu	60	58.75
Bihar Caustic	Bihar	33	39
Chemfab Alkalies	Tamil Nadu	31	19
Sree Rayalaseema	AP	53	61
Kanoria Chemicals	U.P.	33	50
DCM Shriram		NA	76.3
Ballarpur Industries		NA	55.1
Southern Petrochemical		NA	54.1
Chemplast Sanmar		NA	38.3
Andhra Sugars		NA	47.1
Hukumchand Jute		NA	35.1
Jayshree chemicals		NA	20.4
National Rayon		NA	25.9
Century Textiles		NA	28.6

Source: CIER's Industrial data book, 2000-01

The process wise installed capacity of the Caustic soda plants and their relative shares in the total installed capacity as of FY 98 is given in the Table-A.5.2.

Table-A.5.2: Installed capacity of Caustic soda plants according to the process (thousand tons) 1997-98

PROCESS	CAPACITY	PERCENTAGE SHARE
Mercury cell	939	39
Membrane	1350	56
Diaphragm cell	99	4.1
Chemical	20	0.9
Total	2408	100

Source: Alkali Manufacturer's association of India

Manufacturing Process

Caustic soda is mainly produced by the electrolysis of sodium chloride (Common salt). In the electrolysis process, three types of cells are in use – diaphragm cell, mercury cell and membrane cell. In India, the Caustic soda industry began with the diaphragm electrolytic cells. The overall energy cost is high and the quality of the product is inferior. However, there is no serious pollution problem using diaphragm cells. Mercury cells are widely used as they consume less power and produce almost 50% concentrated caustic liquor, which is sold as it is. Heavy metal pollution due to the presence of mercury in the effluents is a hazard. The membrane cell process is more energy efficient than the other two production processes.

Energy consumption Pattern

In the caustic soda industries, energy accounts for 50 to 65% of the total production cost. The consumption of various forms of energy for manufacturing caustic soda is given in the following Table –A.5.3.

Table-A.5.3: Energy consumption pattern in the production of Caustic Soda:

Energy	Process		
	Diaphragm	Mercury	Membrane
Electricity, Kwh	3125	3422	2807
Steam, tons	1.35	0.15	0.22

Source: Bureau of industrial costs and prices, Report on the Caustic Soda industry, Ministry of industry, New Delhi.

Use of DG sets for electricity generation is a common feature in many of the Indian Caustic Soda plants. In the existing conditions, many plants have DG sets of capacity

ranging from 180 KVA to 12600 KVA. In some cases, the DG power is used on a continuous basis and a few plants have already installed waste heat boilers to generate steam at about 5 Kg per Sq.Cm pressure. In most of the plants the DG sets are used as a standby.

Assumptions made for evaluation of cogeneration potential

The following assumptions were made while evaluating the cogeneration potential in the Caustic Soda industrial sector.

- The total annual production capacity is 2.408 million tons.
- The process wise production share and the electricity and steam requirement are as indicated in tables A.5.2 & A.5.3.
- Combined cycle is considered in the plants with an annual production capacity of more than 50,000 tons.
- In the other plants, captive power with meeting the steam demand is only considered.
- The cogeneration configuration which is most suitable for this sector is considered to be furnace oil fired generators with waste heat boiler and suitable condensing turbines.
- The cogeneration configuration considered is schematically represented in Fig: A.5.1, A.5.2, A.5.3.

Technical cogeneration potential

The electricity requirement of the sector is estimated to be about 6500 million units and the annual steam requirement is about 0.52 million tons. The electricity requirement works out to an installed capacity of about 740 MW. The installed capacity of various units are in the range of 20,000 tons per annum to about 200,000 tons per annum.

On the production capacity basis, these units may require power units of capacity 8 MW to 80 MW. To meet this requirement in the individual units furnace oil based generators with waste heat recovery boilers are most suitable and such a system will meet the entire electricity and steam demand of the plant. In addition, in plants with a capacity of more than 50000 TPA, there is a potential for additional steam generation of about 20 TPH at about 12 Kg per Sq.Cm which can be used to produce additional electricity using a condensing turbine. In places like Gujarat where the gas availability is there, Gas based combined cycle also has been considered and found technically suitable for plants with capacity more than 100,000 TPA.

On the above basis, the total technical power generation potential is in the range of about 800 MW in the entire sector with a potential to export about 60 MW of power to the grid.

Conclusion: There exists a technical potential for cogeneration in the Caustic Soda industrial sector. The total cogeneration potential is about 800 MW and the export potential is about 60 MW.

Fig : A 5.1 COGENERATION CONFIGURATION FOR THE CAUSTIC SODA INDUSTRIAL SECTOR:

Cogeneration System for plants with less than 50,000 TPA capacity
(Typical System of a 20,000 TPA Plant)

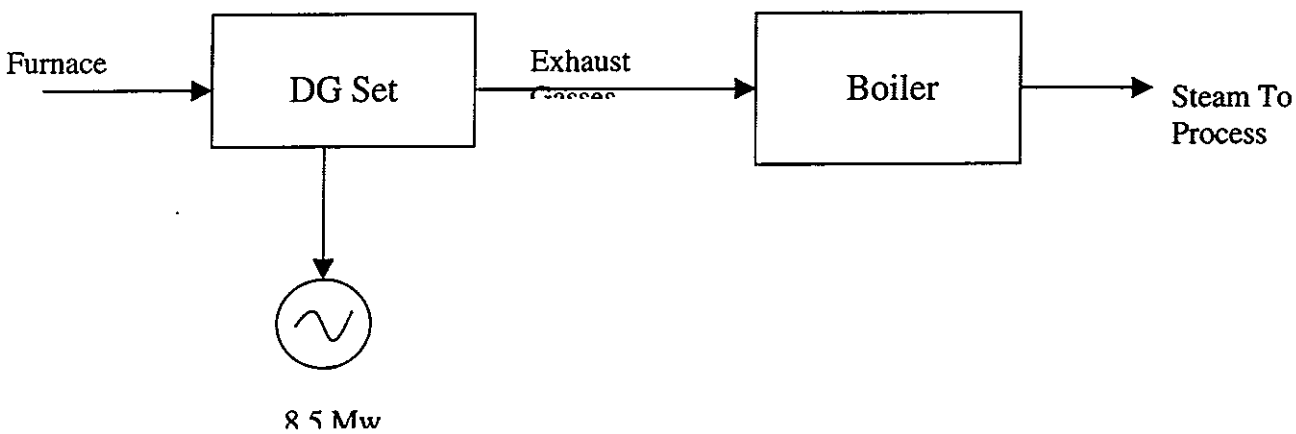

Fig: A 5.2 Cogeneration System for plants with more than 50,000 TPA capacity (Typical System of a 92,000 TPA Capacity)

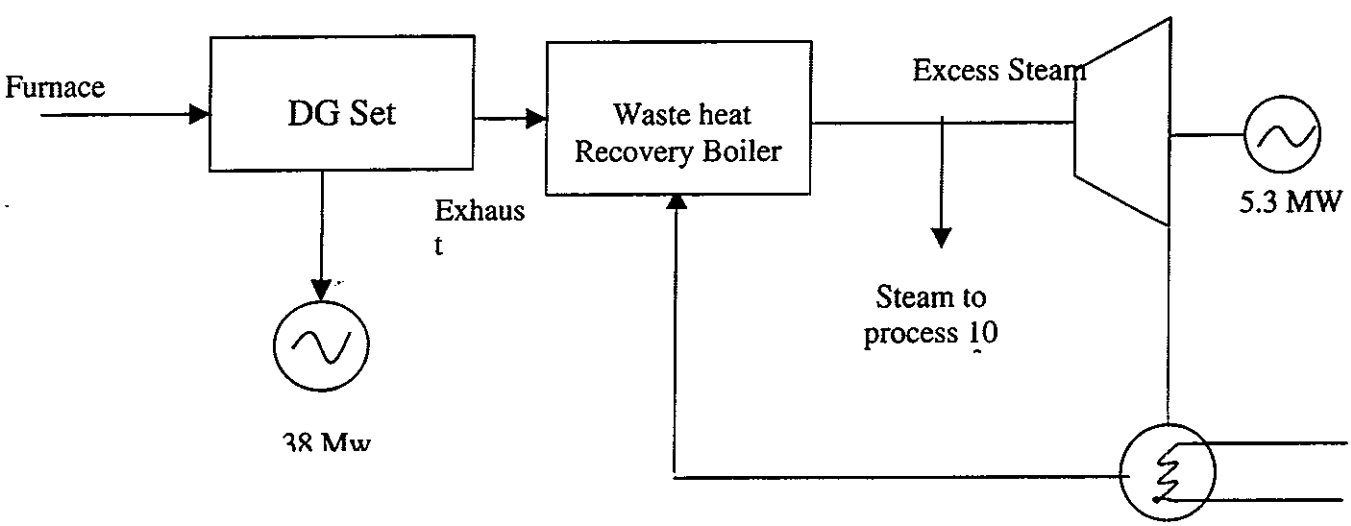

Fig: A5.3 Cogeneration System for more than 50000 TPA Plant as an alternative
(Typical Plant of a 198000 TPA Capacity)

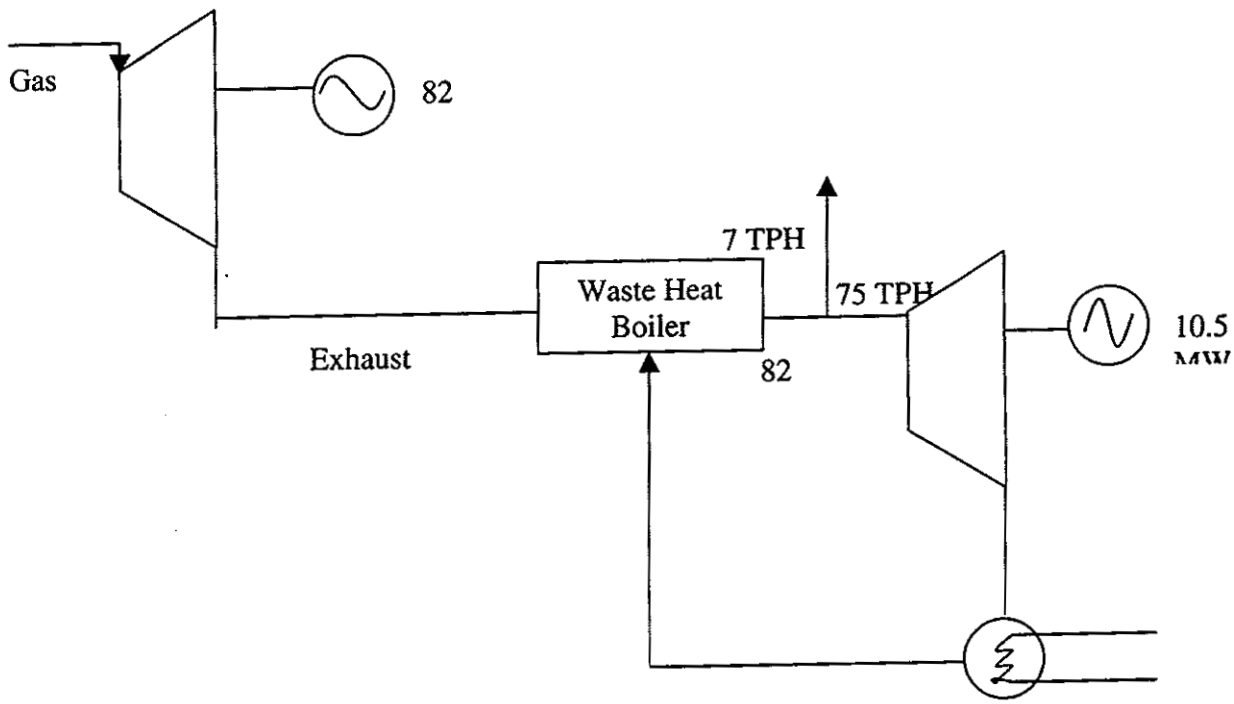

SECTOR: SODA ASH

Introduction

This is chemically known as sodium carbonate. It finds its usage in a wide range of applications including soaps, detergents, glass & silicates and in the manufacture of chemicals. This is a commodity product with very little price elasticity. Nearly 3-4 % of the production is exported.

The total domestic capacity stood at 1.86mn tpa in FY98. Against this the production was around 1.63mn tpa indicating a capacity utilization of 87%. In value terms, the industry stands at Rs1.4bn.

The Domestic soda ash sector consists of six major players. Tata Chemicals is the largest among them followed by Gujarat Heavy Chemicals.

Large capacities are located on the west coast, mainly Saurashtra region of Gujarat, due to easy availability of salt and limestone - the key inputs for production of soda ash. This region accounts for more than 90% of the total capacity.

Easy availability of key inputs (power, limestone and salt) at low cost, becomes critical to sustain margins. Power accounts for 30% of the total cost of input. Such a high cost acts as a deterrent in the competitiveness of the domestic players.

Production Process

The production process for Soda ash is given in Figure-A.6.3

There are two ways to obtain soda ash:

- Conversion of common salt.
- Naturally occurring deposits.

Since these deposits are not available in sufficient quantities here in India, soda ash is produced by conversion of common salt, whereas in USA, it is primarily produced from natural deposits.

Soda ash is generated in hydrated form, which is called washing soda. It is further dried to remove water. The dehydrated form is called soda ash. There are four varieties of soda ash -

- Light form - used as a solvent.
- Dense form - used in the manufacture of furnace based products.
- Medium form - used in the manufacture of paper, dyes, soaps, and detergents.
- Granular form - used as a substitute for the dense variety.

Industry Structure

The industry is concentrated in Gujarat due to abundant availability of salt and limestone - key raw materials required for the production of soda ash, but this area is prone to periodical cyclones and droughts, this affects production.

The industry is highly concentrated in terms of the total producers. There are six major producers of soda ash in India. These are Tata Chemicals, Gujarat Alkalis, VXL Limited, DCW Limited, Tuticorin Alkalis and Punjab National Fertilizers.
The high concentration is mainly due to the scale sensitivity and high capital costs. The minimum economic size is 1000 tpa and involves a cost of Rs8.2bn.
The capacities, along with the unit-wise production is given in the Table A.6.1.

Table-A6.1: Capacities And Production (FY98)

Producers	Capacity ('000 ton)	Production ('000 ton)
DCW Ltd	96	82
Tata Chemicals	875	797
Saurashtra Chemicals	335	300
Tuticoran Alkalies & Chemicals	73	70
Punjab National Fertilisers & Chemicals	66	45
Gujarat Heavy Chemicals	420	402

Energy consumption Scenario

All the Soda ash plants in India employs the SOLVAY process, In which the electricity consumption is about 300 Kwh per tonne of Soda ash. Thermal energy is used for the lime stone calcination, salt purification, calcination of sodium bi carbonate, Crystalisation, drying and purification, ammonia recovery and for other general requirements. The total thermal energy utilisation is about 3.8 Gcals per tonne of Soda Ash. Of the total thermal energy utilised in the Soda ash industries, nearly about 2 Gcals per tonne of Soda ash is for the steam generation and this works out to about 3.3 tonnes of steam per tonne of soda ash and the steam requirement is at a pressure of about 8 Kg per Sq.Cm.

The total power requirement of the Soda ash plants is about 70 MW and nearly 35 MW is produced through the cogeneration route at present.

Technical Cogeneration Potential

Assumptions made in the evaluation of the technical cogeneration potential:

- For the plants with the installed capacity less than 100000 TPA, a boiler with a pressure of 41 Kg per Sq. cm is considered.

- For the plants with more than 100,000 TPA, a boiler of pressure 100 Kg per Sq. cm is considered.
- In all the cases, 15% steam is considered to be produced more to take care of the steam and electricity demand fluctuations.
- Steam turbine route with extraction cum condensing turbine is considered as the cogeneration system.

Cogeneration potential

The system considered for the cogeneration is the steam turbine route with an extraction cum condensing turbine. 15% of the total steam required is considered as produced additionally which is allowed to be condensed in the turbine to meet the fluctuations in the energy demand. The cogeneration system considered for the various capacities is represented pictorially below Fig : A.6.1, A.6.2.

The total cogeneration potential in this sector is about 132 MW. The internal consumption will be about 77 MW, 7 MW being the auxiliary consumption of the cogeneration plant. There is an export potential to the extent of about 55 MW. Already most of the plants are having the cogeneration systems and the capacity of the existing plants is about 35 MW.

Conclusion

There is a good chance of technical cogeneration potential in the Soda ash industries in India. Though they are equipped with the cogeneration systems, it is possible to improve the system efficiency and thereby to produce about 132 MW power with an export to the grid to the extent of 55 MW.

Total technical cogeneration potential in Soda ash sector	: 132 MW
Internal consumption	: 77 MW
Export potential	: 55 MW

Fig : A.6.1

Cogeneration system for Plants with Capacities less than 100,000 TPA
(for a typical 96000 TPA Plant)

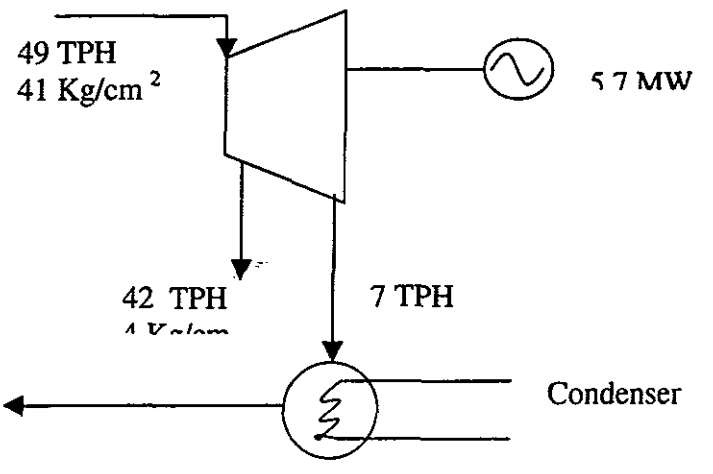

Fig : A.6.2

Cogeneration system for Plants with Capacities more than 100,000 TPA (for a typical 4,20,000 TPA Plant

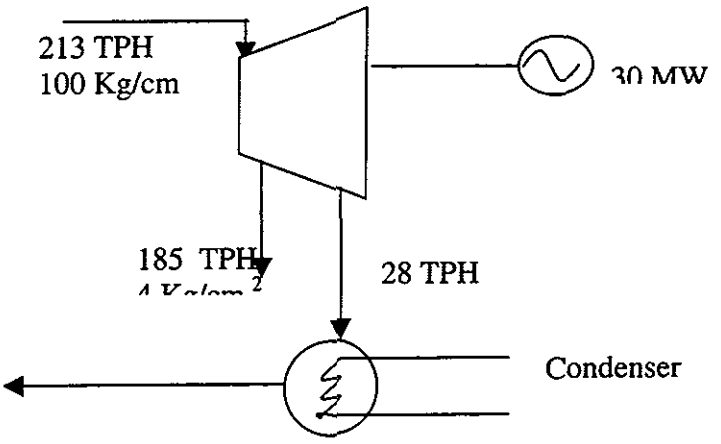

Fig : A.6.3

Alkaline & Chlorine (Soda Ash)

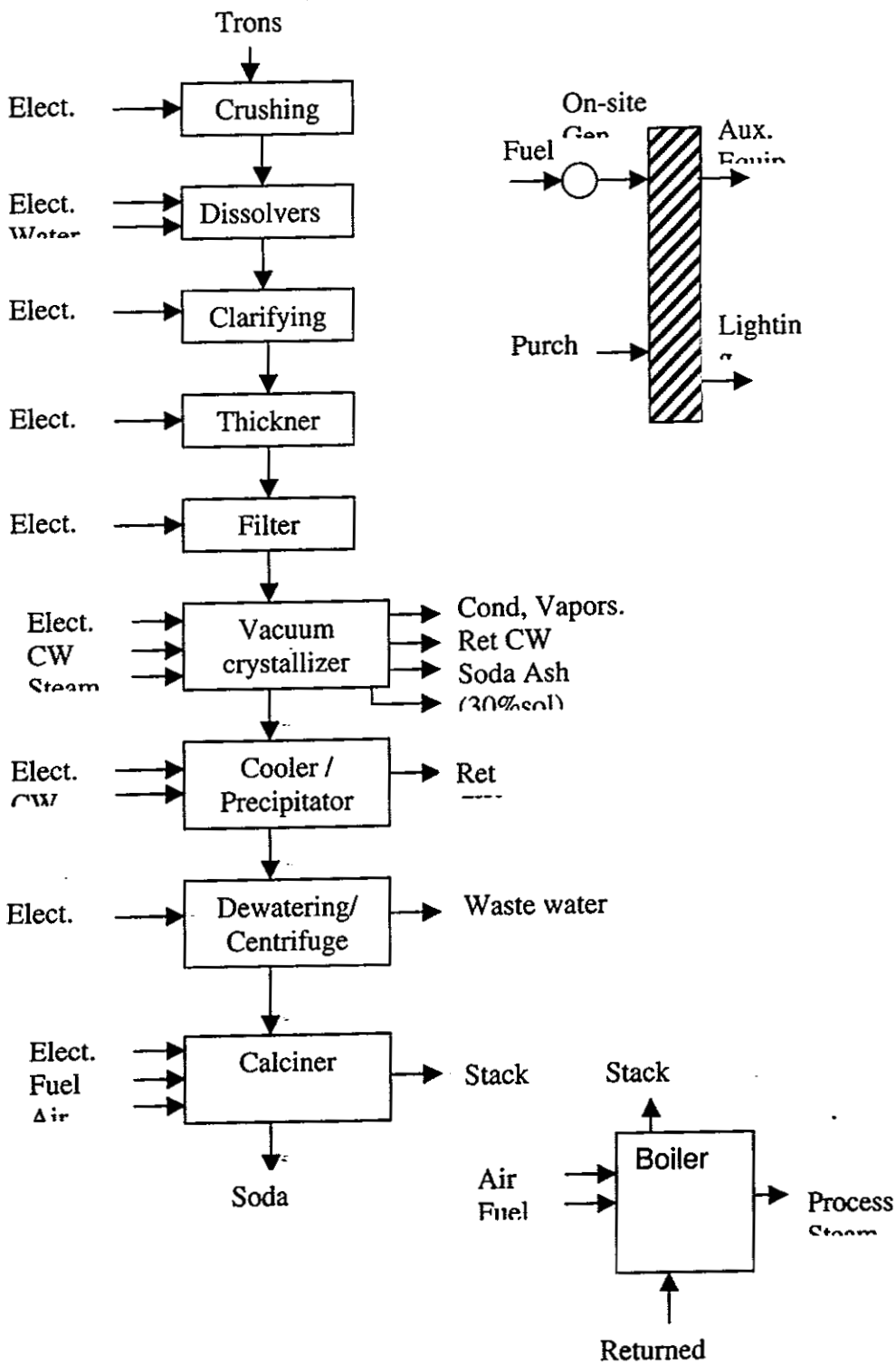

Annexure - 7

SECTOR: PHARMACEUTICALS

Introduction

Pharmaceuticals are medicinally effective chemicals, which are converted to dosage forms suitable for patients to imbibe. In its basic chemical form, pharmaceuticals are called bulk drugs and the final dosage forms are known as formulations.
Usage of pharmaceuticals is governed by the underlying medical science. The four primary medical sciences are as under.

- Allopathy or modern medicine has gained global popularity.
- Ayurveda, an ancient Indian science, mainly uses herbal remedies.
- Unani, having Chinese origin, is prevalent in South East Asia.
- Homeopathy, founded by a German physician, was fairly popular in the early 19th century.

World-over, the pharmaceuticals industry is focussed on Allopathy, the most modern medical science. Other modes of medical treatment such as Homeopathy, Ayurveda and Unani are more prevalent in third world countries

Background

In the 50 years since independence, the Indian pharmaceuticals industry has evolved significantly. Initially, the MNCs had a near monopoly. They imported and marketed formulations in India, mainly low cost generics for the masses and also a few specialities, life saving, high priced products. With the Government increasing pressure against imports of finished products, the MNCs set up formulating units and continued importing the bulk drugs. In the '60s, the Indian Government laid the foundation of the domestic pharmaceuticals industry by promoting Hindustan Antibiotics Ltd (HAL) and Indian Drugs and Pharmaceuticals Ltd (IDPL) for manufacture of bulk drugs. However, MNCs maintained a lead due to the backing of their global R&D. High cost for basic research deterred local players (in the private sector).

Present Scenario

Over 20,000 registered pharmaceutical manufacturers exist in the country. The market share of MNCs has fallen from 75% in 1971 to around 35% in the Indian pharmaceuticals market, while the share of Indian companies has increased from 20% in 1971 to nearly 65%. PSUs have almost lost out completely.
The sector has undergone several policy as well as attitudinal changes over the past two years. It was one of the major beneficiaries from the budget proposals.

Some of the positive steps taken were :

- Pharmaceutical industry is recognized as knowledge based industry. The government has plans to increase the investment in research and development.
- Rationalization of excise duty and reduction in interest rates in export financing.
- Additional deductions under Income Tax laws for R&D expenses.
- Foreign direct investments permit upto 74% through automatic route.
- Setting up two high levels committees to review the drug policy for strengthening R&D capabilities and reducing the price control regime.

Besides, the Indian Parliament has enacted the required changes in the Indian Patent Act 1970 (IPR) regarding mailbox arrangement and exclusive marketing rights (EMR).

Selected Produces of Drugs and Pharmaceuticals are as show in Table - 7.1

Table A 7.1 Sales(Rs cr.)

Company	**1996-97**	**1997-98**
Indian Drugs & Pharmaceuticals	43.5	3.8
Hindustan Antibiotics	134.9	105.9
Glaxo India	699.9	757.8
Ranbaxy	1119.8	1376.5
Lupin Labs	620.7	514.3
Cipla	451.9	514.4
Nicholas Piramal	319.3	346.2
Cadila Healthcare	255.5	255.5
Knoll Pharamaceuticals	220.8	229.8
Ambalai Sarabhai	235.8	251.0
Hoechst Marion	382.7	533.0
Wockhardt	203.0	276.2
Dr. Ready's Lab	245.0	321.8
Smithkline Beecham	246.0	319.1
Orchid	192.5	240.4
Alembic Chemicals works	282.4	310.5
Paam Pharmaceuticals	234.7	N/A
IPCA Labs	251.2	273.1
Pfizer	228.2	235.7
Kopran	322.0	243.6
Torrent Pharmaceuticals	258.9	347.5

Manufacturing Process

Bulk drugs are prepared by appropriate chemical reactions of natural/ synthetic intermediates under controlled conditions. Formulations manufacture is a batch mixing process. Right dosage of the bulk drug (active ingredient) is compounded with compatible substances, to make the formulation palatable. Packed as per the physical form - bottles (for liquids), blister strips (for tablets/ capsules) or ampoules (for powders), each formulation pack has the expiry date and storage instructions printed on it. Stringent quality control is exercised at all stages. The detail Manufacturing process is show in Fig 7.1

Cogeneration Potential

Due to the wide variation in the process conditions of different pharmaceutical products, the cogeneration configuration is not the same for the entire sector. The two possible cogeneration systems are the steam turbine based one and the furnace oil fired generators with waste heat boilers. In some cases it may be necessary to go in for secondary firing to meet the steam demand where the cogeneration system is based in furnace oil based generators.

Conclusion

The technical cogeneration potential in the pharmaceutical sector in India is estimated to be about 80 MW. The total internal consumption will be of the order of about 60 MW and there is a potential for export to the extent of 20 MW.

Fig 7.1 PHARMACEUTICAL PREPARATIONS
PROCESS FLOW

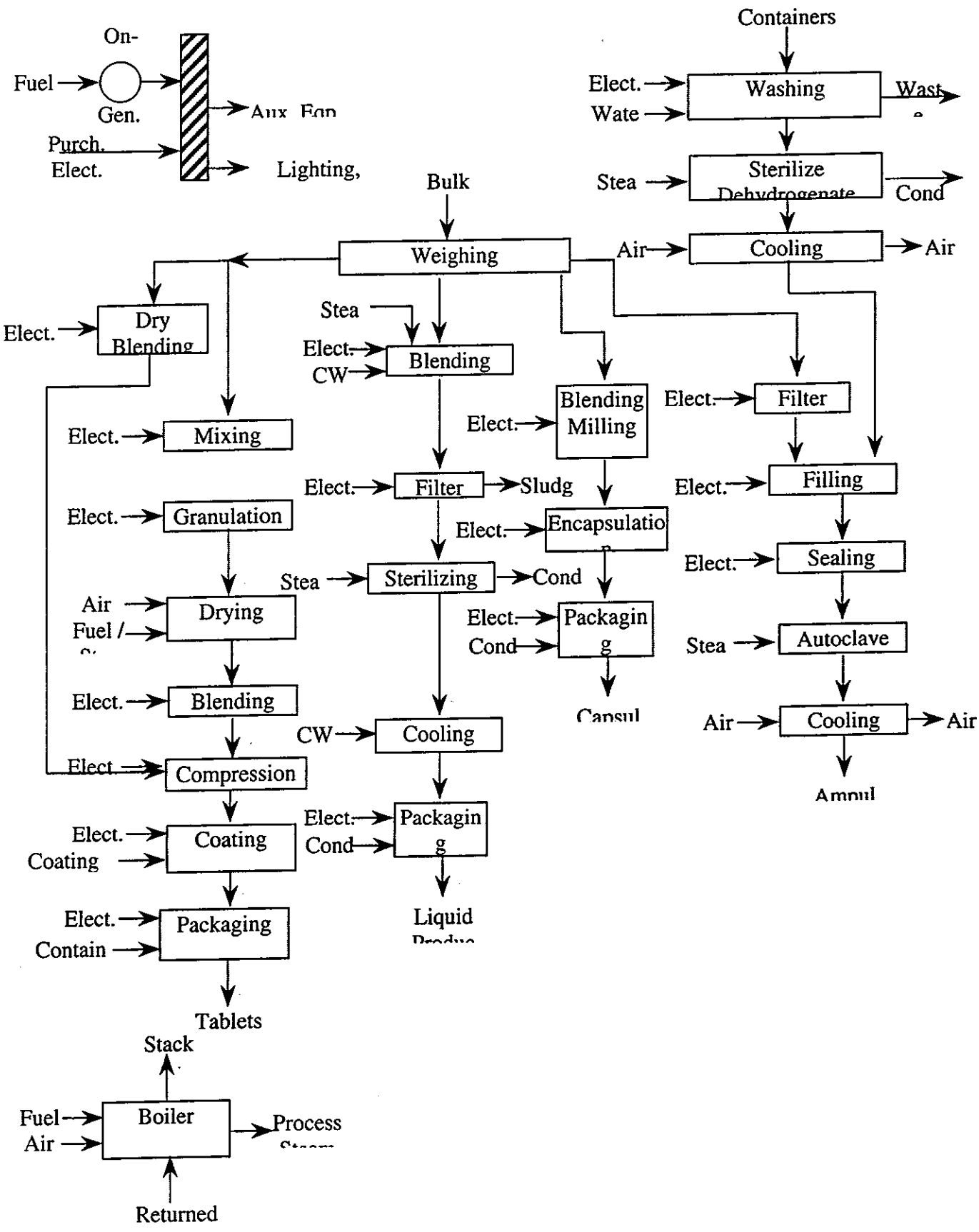

SECTOR: CARBON BLACK

Introduction

The outstanding black pigment is the versatile product known as carbon black. Carbon black is one of the most important industrial chemical products. Carbon black is considered a petrochemical because it is made from natural gas or petroleum residues. There are several processes involving either incomplete combustion (burning off the hydrogen of a hydrocarbon, such as methane, and leaving the carbon) or by externally applied heat in a furnace, splitting the hydrocarbon into hydrogen and carbon.

The most important of all the uses of carbon black is in compounding rubber to be used in tires. An average tire of a passenger automobile contains about four pounds of carbon black. Carbon black is not only used as a pigment but also is employed in printing ink, an ink being little different from an applied coating. Carbon black creates the principal difficulty in recycling newsprint because no practical way has been found to destroy the black ink. A specialized use of carbon black is as an additive to phonograph records. A special form of carbon black, derived from acetylene, has its principal use in electrochemical dry cells.

Industry Profile

There are mainly 3 players in the manufacture of carbon black. The approximate production details are as follows.

Name of the company	Production Capacity, Million tons	Percentage Share
Philips carbon	1.74	60%
Cabat carbon	0.87	30%
Goa carbon	0.29	10%

The total annual production of carbon black is about 2.9 million tons in 1997-98.

Energy consumption scenario

The basic raw material is the aromatic feed stock and part of this raw material acts as the fuel. The gases from the furnace is passed through a recuperater where, some heat is recovered and the combustion air is preheated. The gas then passes through a waste heat boiler where, the steam necessary for the process is produced using the heat available in the gases. Carbon is filtered in the bag filter and the gas leaving the bag filter contains about 21% of carbon monoxide, 10% of hydrogen and some amount of

sulfur and the gas mixture is quite rich in the heating value which is at present let out into the atmosphere.

Cogeneration potential

The tail gases released at the end of the process contains considerable heating value and these gases could be used as a fuel in the waste heat recovery boiler and steam may be generated at a pressure of about 27 Kg. per Sq. Cm. The steam could be passed through a straight condensing turbine and the power could be generated.

The power generation potential in a typical 50,000 TPA plant is estimated to be about 7 Mw. The overall technical cogeneration potential in the entire sector is about 30 MW, and the net capasity is 27 MW. The internal consumption will be about 15 MW and the export potential to the grid will be about 12 MW. The proposed cogeneration system in the carbon black sector is represented in Figure-A.8.1.

Fig: A.8.1 Typical Cogeneration System for a 50,000 TPA Capacity

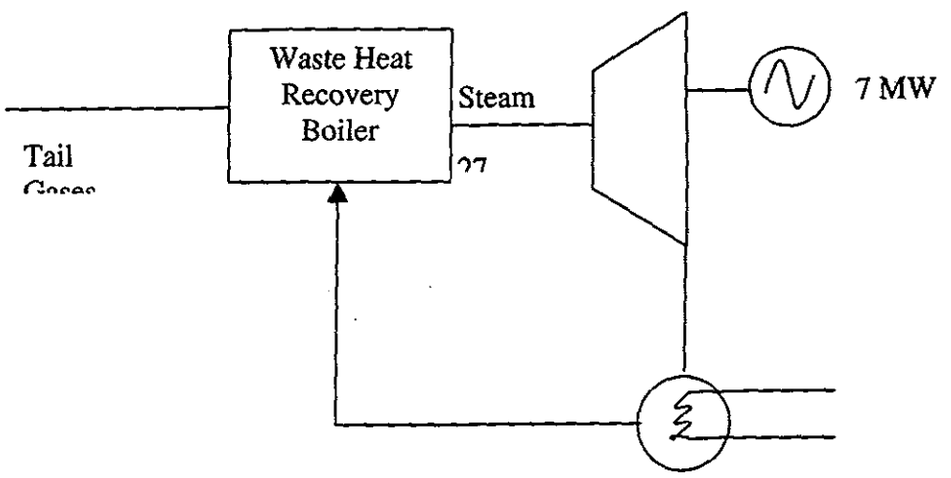

SECTOR: TEXTILE-COTTON

Introduction

The Indian textile industry enjoys major strengths in the global market. It is largely self-sufficient as regards raw material, with India's cotton crop being the third largest in the world. Moreover, its spread allows spinning of different counts of yarn. However, though the acreage is one of the largest in the world, yield of cotton is low. The potential for increase in the overall crop size is enormous. India has achieved self-sufficiency in synthetic raw material as well as mainstream products like polyester staple fiber, polyester filament yarn, acrylic fiber and viscose fiber though certain specialty polyester fiber and yarn are still imported.

The export potential of the Indian cotton textile sector is also promising. India's penetration in the international commodity markets (for basic yarns and gray fabrics) is increasing due to its cost competitiveness. India has emerged as one of the most cost competitive locations for production of textile wear such as casual and leisure garments that thrive on variety, flexibility and the running small batches.

Industry Profile

The textile industry may be classified as Spinning Units (production of yarn), Manufacturing Units (Production of Grey cloth) and Composite Mills (Production of Processed cloths).1788 cotton textile industries in India are engaged, producing yarns (Pure & Blended). The Pure Yarns include Cotton, Viscose & others. The Blended Yarns include Polyester–cotton, Polyester – viscose, Cotton – viscose, Cotton – other fibres & others.

The spinners are the primary producers followed by the weavers/knitters (intermediate producers), the finishers who produce finished fabrics for retail sales or sales to garment converters and converters or manufacturers of garments/bed linen.

Finished fabrics include:

a. Apparel - outer and inner wear.
b. Household fabrics - furnishings, bed linen etc.
c. Accessories- bags, belts, handkerchiefs, etc.
d. Industrial fabrics - filter cloth, parachute cloth etc.

Of these, apparel and household fabrics are major segments for the cotton textile industry since they mainly use cotton in addition to polyester and different types of viscose or blends thereof.

Units in the cotton textile industry are segmented by the degree of integration achieved and the technology used. Thus, they may not convert all the yarn produced into gray fabrics or all the gray fabrics produced internally into finished fabrics.

Production

The total production capacity of this industrial sector is reported to be about 2.86 million tones during the year 1998. Out of the arrived figure, 2.23 million tones of pure yarns and 0.63 million tones of blended yarns have been produced.

Energy Requirements & Consumption Norms

The prime energy inputs in textile manufacture are steam and power. The requirements of steam and power vary with respect to the following,

- Yarn counts
- Type of fabric (product mix)
- Extent of wet processing (Dyeing, Printing and Dyeing-printing)

Cotton Textiles have wide variations in their steam and power demand. However, steam in general is required at two pressure levels namely 8.5 Kg per Sq.Cm and 3.5 Kg.per Sq.Cm respectively.

The approximate norms available for steam and electricity consumption for textile manufacturing processes are tabulated in Table - A9.1, A9.2

Table-A.9.1: Steam Consumption

Cloth/Fabric	Steam Consumption (kg/Kg of cloth)	Heat Energy required (Kcal/m of cloth)
Pure Yarns	06 -14 kgs	1800
Blended Yarns	18 – 25 kgs	3000

Table-A.9.2: Power Consumption

Counts	Kkh/Kg of yarn produced
10^s	0.74
20^s	1.17 to 1.34
40^s	2.31 to 2.45
100^s	7.09 to 7.12
120^s	8.75

Facility Description

Only a few mills have cogeneration facilities to meet some of their demand. Most of the mills have the boilers which are very old and designed for their process conditions. More over, the cotton textiles in most cases operate as batch type units and the steam and power demand varies widely with respect to time.

It gives an opportunity to introduce cogeneration system in the cotton textiles with a pre condition that the operation should be made systematic and the scheduling should be in such a way that there should not be great variations in the process conditions frequently.

Textile Manufacturing Process

The basic flow diagram for the manufacture is given in Figure-A.9.4. The cotton textile industry predominantly uses cotton and also synthetic fibers in staple lengths not exceeding 51 millimeter. It does not use wool and continuous filament yarns. The cotton textile industry converts staple fiber into finished textile products through four manufacturing stages.

- Spinning: conversion of staple fiber into yarn.
- Weaving & knitting: conversion of yarn into gray fabrics.
- Wet processing: conversion of gray fabrics into finished fabrics.
- Garment making: conversion of finished fabrics into garments.

Thus the spinners are the primary producers followed by the weavers/knitters (intermediate producers), the finishers who produce finished fabrics for retail sales or sales to garment converters and converters or manufacturers of garments/bed linen.
Finished fabrics include:

e. Apparel - outer and inner wear.
f. Household fabrics - furnishings, bed linen etc.
g. Accessories- bags, belts, handkerchiefs, etc.
h. Industrial fabrics - filter cloth, parachute cloth etc.

Of these, apparel and household fabrics are major segments for the cotton textile industry since they mainly use cotton in addition to polyester and different types of viscose or blends thereof.
Units in the cotton textile industry are segmented by the degree of integration achieved and the technology used. Thus, they may not convert all the yarn produced into gray fabrics or all the gray fabrics produced internally into finished fabrics.

Cogeneration Potential

Assumptions made in the evaluation of the technical potential:

- The evaluation of the cogeneration potential is based on the overall production capacity of the sector.
- The average electricity consumption is based on the count size. It is assumed as 2.5 Kwh per Kg of yarn as more than 80% of the production of the yarn is below 40 counts.
- The average steam consumption is assumed as 10 Kg per kg for pure yarns and 22 kg per kg in the case of blended yarn.

- The total electricity requirement of the sector is about 7150 million units per year and this works out to an installed capacity of about 1000 MW assuming 300 working days in a year.
- The total steam requirement is about 36 million tons per year or about 5000 tons per hour assuming 300 working days in a year.
- 40% of the steam is assumed to be used at a pressure of 8 Kg per Sq.Cm and the balance 60% is assumed to be used at a pressure of 3.5 kg per sq.cm.
- 40% of the total production capacity is assumed to be from mills of larger capacity were it is possible to install a boiler with a pressure condition of 100 kg per Sq. Cm.
- 30% of the total production capacity is assumed to be from mills of medium capacity were it is possible to install a boiler with a pressure condition of 60 kg per Sq. Cm
- 30% of the total production capacity is assumed to be from mills of capacity were it is possible to install a boiler with a pressure condition of 40 kg per Sq. Cm
- The cogeneration configuration of all the above cases are pictorially represented in Fig: A9.1, A9.2, A9.3.

Technical Cogeneration Potential

There exists a potential of about 390 MW in the larger capacity mills. Their requirement is nearly 400 MW and hence the cogeneration will meet their own requirement without having any opportunity to export to the grid.

In the case of medium size mills, the technical cogeneration potential is about 230 MW and in the case of other mills the estimated potential is about 190 MW. In total, the technical cogeneration potential in this sector is about 810 MW and there is no potential for the export to the grid.

Fig: A9.1

Large Capacity Mills

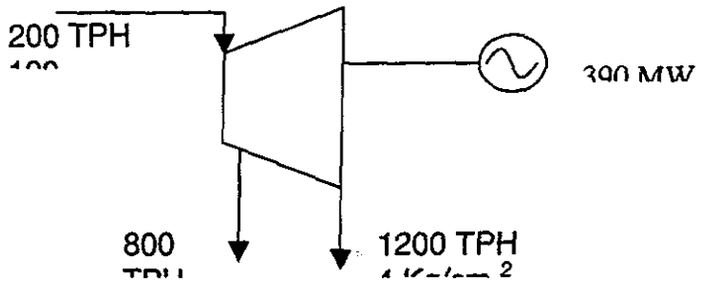

Fig : A9.2

Medium Capacity Mills

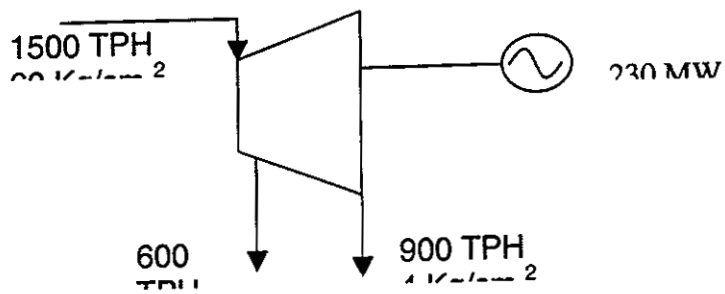

Fig: A9.3

Other Mills

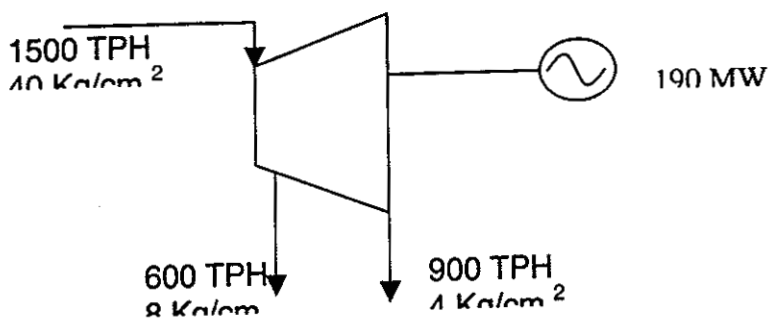

Fig : A9.4

WEAVING MILLS , MAN-MADE FIBER

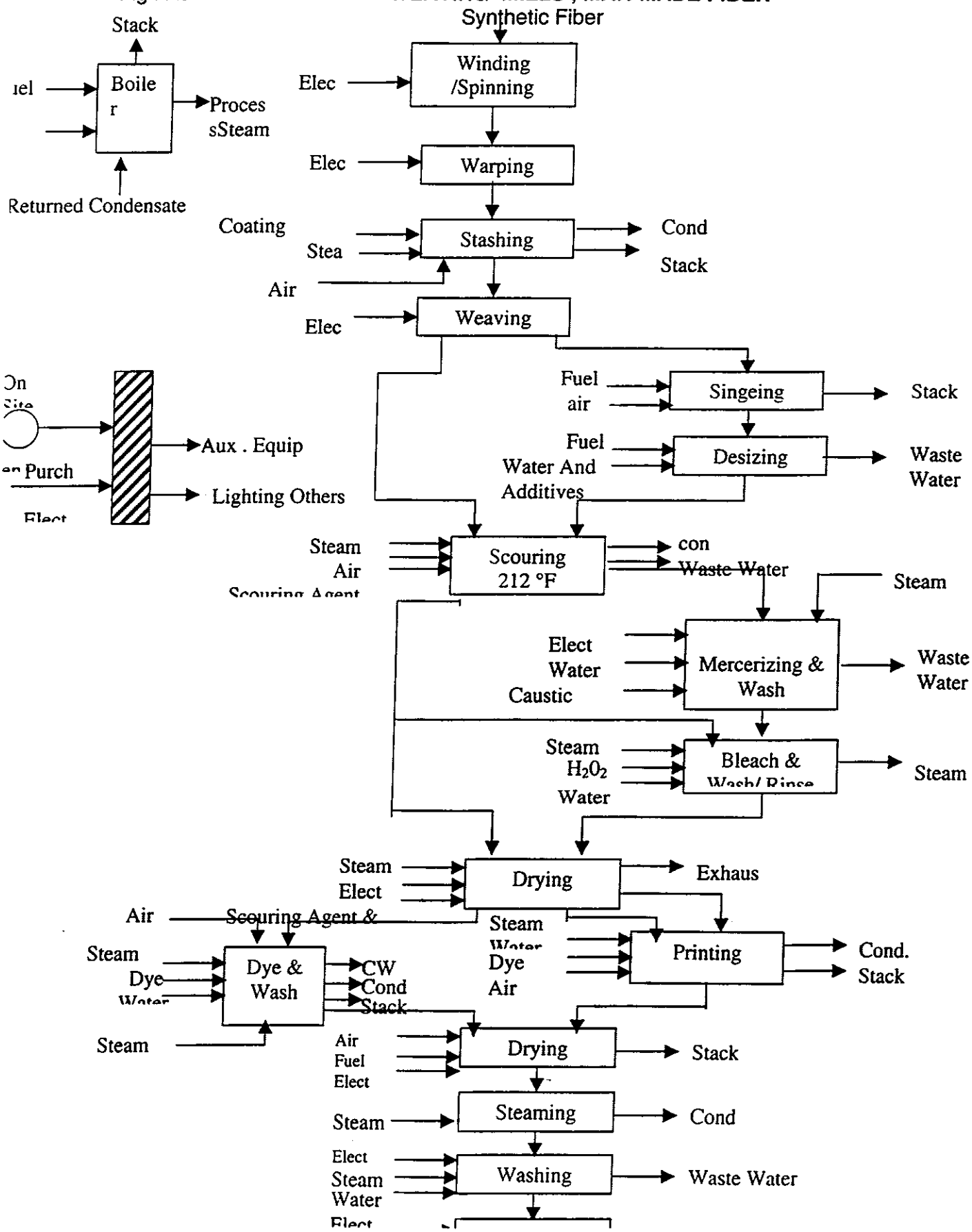

SECTOR: CEMENT INDUSTRY

Introduction

India is the largest cement producing country in the world. In spite of the rapid growth in this industry, the per capita consumption of cement in india is still among the lowest in the world. In India there are 119 cement companies with a production capacity of 107 million tonnes. The per capita consumption in India is 57 kg, while that of the Organization for Economic Cooperation and development countries is 465kg.

The Indian scenario presents a view of the complementary role being played by old technological process and the present day mini cement plants as against the energy efficient dry process plants. The Indian cement industry comprises 115 large rotary kiln cement plants and another 300 kilns in the mini cement plants category.

Product description

Cement is a mixture of limestone, clay, silica and gypsum. It is a fine powder which when mixed with water sets to a hard mass as a result of hydration of the constituent compounds. It is the most commonly used construction material.

There are different varieties of cement based on different compositions according to specific end uses namely Ordinary Portland Cement, Portland Pozolona Cement, Portland Blast Furnace Slag Cement, White Cement and Specialized Cement. The basic difference lies in the percentage of clinker used.

- **Ordinary Portland Cement (OPC)**

OPC, popularly known as grey cement, has 95% clinker and 5% of gypsum and other materials. It accounts for 70% of the total consumption. White cement is a variation of OPC and is used for decorative purposes like rendering of walls, flooring etc. It contains a very low proportion of iron oxide.

- **Portland Pozolona Cement (PPC)**

PPC has 80% clinker, 15% pozolona and 5% gypsum and accounts for 18% of the total cement consumption. Pozolona has siliceous and aluminous materials that do not possess cementing properties but develop these properties in the presence of water. It is cheaply manufactured because it uses flyash/burnt clay/coal waste as the main ingredient. It has a lower heat of hydration, which helps in preventing cracks where large volumes are being cast.

- **Portland Blast Furnace Slag Cement (PBFSC)**

PBFSC consists of 45% clinker, 50% blast furnace slag and 5% gypsum and accounts for 10% of the total cement consumed. It has a heat of hydration even lower than PPC and is generally used in construction of dams and similar massive constructions.

- **White Cement**

Basically, it is OPC: clinker using fuel oil (instead of coal) and with iron oxide content below 0.4% to ensure whiteness. Special cooling technique is used. It is used to enhance aesthetic value, in tiles and for flooring. White cement is much more expensive than grey cement.

- **Specialized Cement:**

⇒ **Oil Well Cement:** is made from clinker with special additives to prevent any porosity.

⇒ **Rapid Hardening Portland Cement:** It is similar to OPC, except that it is ground much finer, so that on casting, the compressible strength increases rapidly.

⇒ **Water Proof Cement:** OPC, with small portion of calcium stearate or non-saponifibale oil to impart waterproofing properties.

MANUFACTURING PROCESS

The basic raw material for cement manufacturing is limestone. Depending on the type of cement produced, other materials like clay, laterite, blast furnace slag, silica, sand, fly ash, sea shells, etc. are added in proportions. The process broadly envisages preparation of raw meal consisting of limestone and other additives, conversion of raw meal into clinker by calcining and sintering and finally conversion of clinker into cement by grinding. The process is schematically shown in Fig: A.10.2.

There are basically two process followed in the cement manufacturing:

- Wet process
- Dry process

Wet process: this process is evolved on the principle that grinding and blending are easier in a wet medium than in a dry medium. The raw materials are crushed, made into slurry by addition of around 30 % of water and then ground in the grinding mill. The ground slurry is directly fed into the kiln for calcining and sintering.

Dry Process: The process avoids use of moisture in grinding and blending. After crushing, the raw materials are dried before mixing and grinding. The ground raw mix is fed to the kiln for calcining and sintering.

In our country, about 65% of the plants work on Dry or Semi dry process.

Energy Consumption Pattern

The energy consumption in a cement plant is normally expressed in terms of thermal energy in kcal/kg. Of clinker and electrical energy in terms of kWh/MT of cement. The average consumption figures for Indian cement plants and the energy consumption of some of the plants are as given Table A.10.1.

Table-A.10.1: Average energy consumption norms in Indian Cement plants.

	Wet		Dry	
Description	**Actual**	**Indian Avgs.**	**Actual**	**Indian Avgs.**
Heat Consumption kcal/kg clinker	1500 -1880	1480	900 - 1200	900
Power consumption kWh/t cement	108 - 138	110	138 – 167	135

Co-Generation Potential

Assumptions made: While evaluating the technical cogeneration potential the following assumptions are made.

- The cogeneration potential evaluation is based on the kiln preheater exhaust and the kiln cooler exhaust.
- Though the DG exhaust also could be considered, it is not taken into account due to the lack of data on the installed capacity of DG sets in the Cement plants and their operation levels.
- The Kalina cycle, which is based upon ammonia-water binary working fluid is considered as against the Rankine gaseous waste heat system and the Organic Rankine waste heat systems.
- The kiln preheater exhaust temperature is assumed to be about 400 deg. C and the clinker cooler exhaust temperature is assumed to be about 230 deg. C.

Technical cogeneration potential: On the above assumptions, it is estimated that about 2.5 KW generation capacity per TPD installed capacity of the cement plant is possible. The cogeneration system will fall under the bottoming system and the suitable system configuration for the cement sector is presented in the Fig : A.10.1.

The overall production of the cement sector is reported to be about 107 million tons, which corresponds to an installed capacity of 300,000 TPD. On this basis, the available technical potential for cogeneration in the Indian cement mills is about 750 MW. However with the present trend of electricity consumption in the cement sector, it requires about 1500 MW installed capacity to meet its own requirement. Hence, there will not be any cogeneration power available for export to the grid.

Fig: A10.1 Cogeneration system for cement industries based on the Kalina cycle

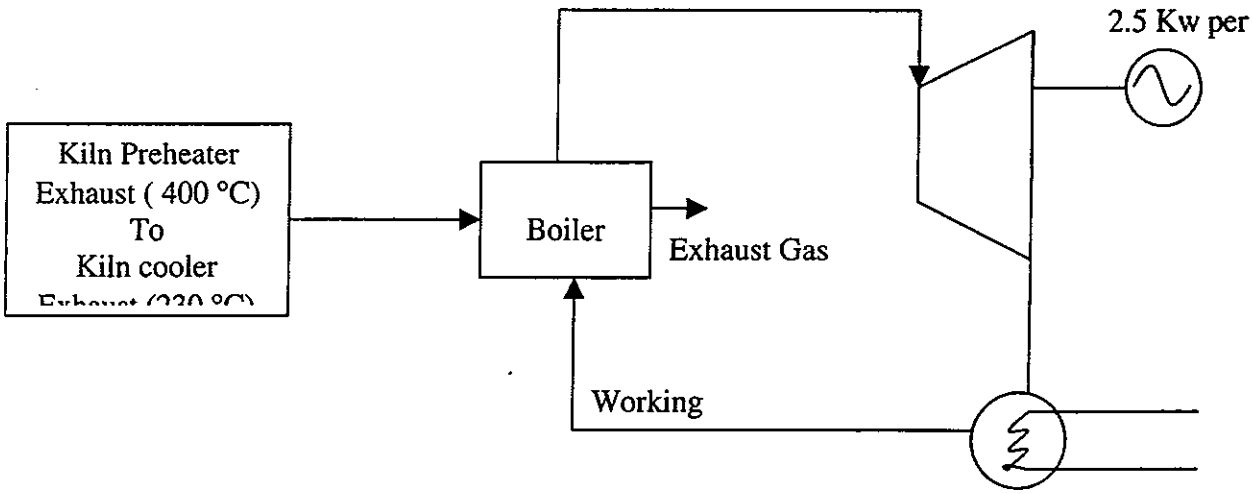

Fig :A.10.2

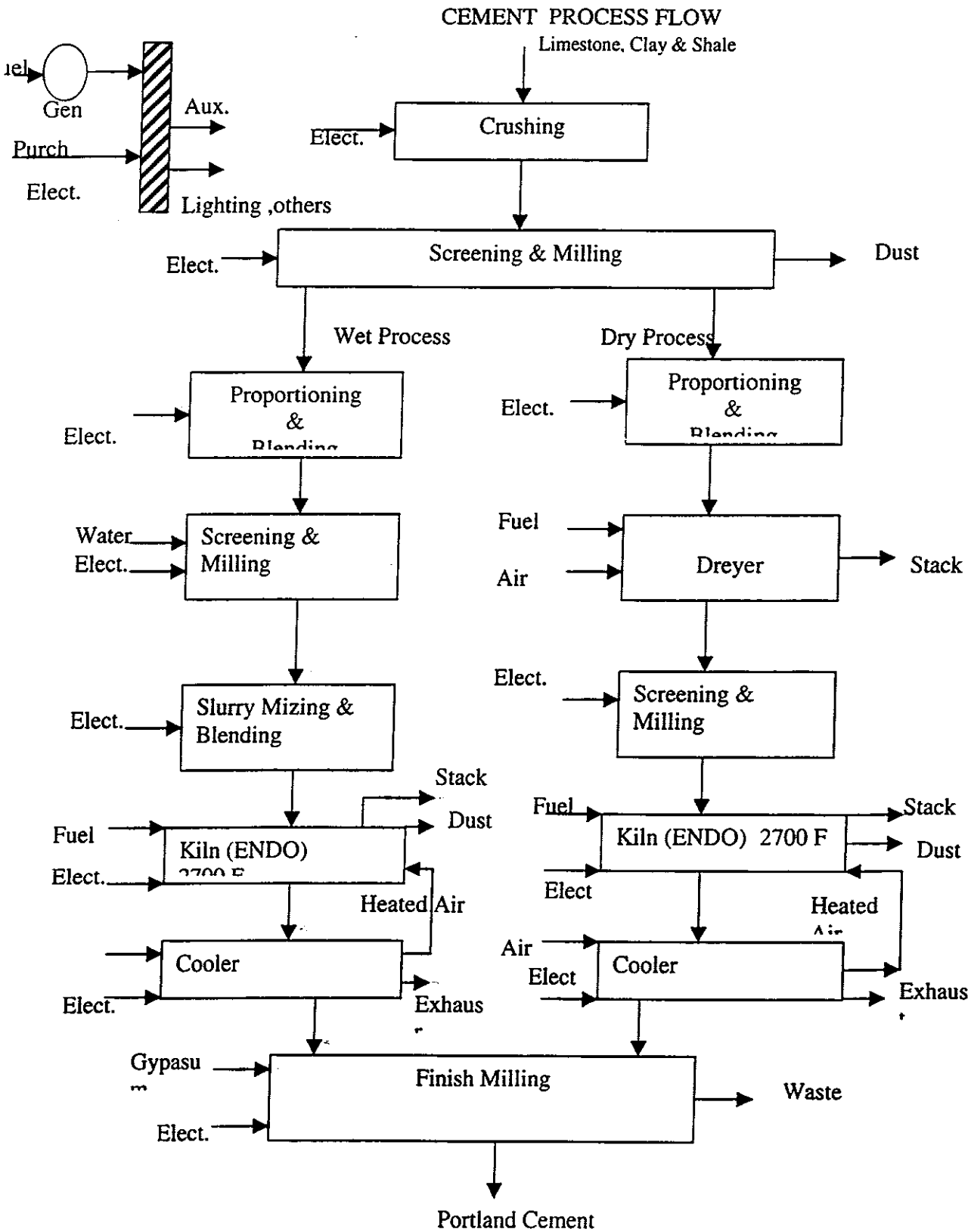
CEMENT PROCESS FLOW
Limestone, Clay & Shale
Gen
Aux.
Purch
Elect.
Lighting ,others
Elect.
Crushing
Elect.
Screening & Milling
Dust
Wet Process
Dry Process
Proportioning & Blending
Elect.
Elect.
Proportioning & Blending
Water
Elect.
Screening & Milling
Fuel
Air
Dreyer
Stack
Elect.
Slurry Mizing & Blending
Elect.
Screening & Milling
Stack
Dust
Fuel
Kiln (ENDO) 2700 F
Elect.
Fuel
Kiln (ENDO) 2700 F
Stack
Dust
Elect
Heated Air
Heated
Air
Cooler
Elect.
Exhaus
Air
Elect
Cooler
Exhaus
Gypasu
Elect.
Finish Milling
Waste
Portland Cement

SECTOR: TEXTILES: VISCOSE STAPLE FIBRE AND VISCOSE FILAMENT YARN

Introduction

There are two types of cellulosic fibre/yarn, Viscose Staple Fibre (VSF) and Viscose Filament Yarn (VFY). VSF is a close substitute for cotton and is used in the manufacture of fabric and yarn. VFY, popularly known as art (artificial) silk, is mainly used as substitute for silk in the domestic market. India is one of the largest viscose producers in world.

India is the largest producer of VFY (rayon yarn) and the domestic industry is dominated by the Birla Group. There are seven companies manufacturing VFY in India.

Indian Demand and Supply Scenario

Domestic demand for VSF and VFY have been in tandem with production (details in Table A11.1, A11.2). Demand for VSF and VFY in FY98 was 199,000 ton and 54,000 ton and production in the same year of VSF and VFY was 188,000 ton and 57,000 ton respectively.

Table-A.11.1: Production Of VFY And VSF (000 ton)

Financial Year	VFY	VSF
1993-94	53	183
1994-95	59	175
1995-96	61	195
1996-97	57	179
1997-98	57	188
1998-99 (First Half)	31	95

Table-A.11.2: Consumption Of VFY And VSF (000 ton)

Financial Year	VFY	VSF
1993-94	53	183
1994-95	57	206
1995-96	53	206
1996-97	53	190
1997-98	54	199
1998-99 (First Half)	29	96

Indian Supply Scenario

Indian industry is around 11% of the global cellulosic industry. The importance of India is bound to increase, on account of a continuously declining production in developed countries.

VSF is a duopolistic industry. Grasim and SIV Industries are the two companies manufacturing VSF. Grasim has 85% of the market share.
(Details in Table- A.11.3, A.11.4)

Table-A.11.3: Installed Capacity And Production of VSF Producers (000 ton)

Company	Capacity	Production
Grasim Industries	217	174
SIV Industries	39	14

Table-A11.4: Installed Capacity And Production of VFY Producers (000 ton)

Company	Capacity	Production
Century Textiles	19.2	12.3
Indian Rayon	15.0	14.3
Kesoram	6.5	6.7
Baroda Rayon	4.5	3.9
SIV	7.5	3.1
NRC Ltd	16.0	12.7
Travancore Rayon	4.2	2.6

Cogeneration Potential

Assumptions made in the evaluation of the technical potential for cogeneration in the viscose filament yarn and staple fibre industrial sector is as follows.

- The installed capacity of the VSF and VFY are taken as 199,000 tons and 54,000 respectively.
- Though the steam consumption and the electricity consumption varies widely, on the industry basis due to the production of some other products like paper, etc, for the purpose of the technical evaluation, the general norm of steam and power consumption has been considered. Accordingly, the specific steam consumption and the electricity consumption are taken as 130 tons per ton of yarn and 14000 Kwh per ton of yarn respectively.
- It is, in general assumed that the units need steam at two pressure levels, namely 8 Kg per Sq. Cm and at 3.5 Kg per Sq.Cm.
- The requirement of 8 Kg per Sq.Cm steam is taken as 10% and that of 3.5 Kg per Sq. Cm is taken as 90%.
- The variations in the installed capacity is from 14 TPD to about 200 TPD. For the purpose of the evaluation of the technical potential, it is assumed that a 100 Kg per Sq.Cm boiler can be installed in all the units irrespective of the size.

- Some of the units already have the cogeneration system. It is assumed that the existing systems are sub-optimal and there is a better opportunity for the technical cogeneration potential.
- Condensation to the extent of 15% is assumed to take care of the fluctuations in the steam and the electricity consumption.

Technical cogeneration potential

The total steam requirement for the entire sector is about 4550 TPH and the power requirement is about 490 MW. With the suitable high pressure boiler and the extraction condensing turbine, there is a potential to generate about 1180 MW power from all the units in this sector. The cogeneration system considered suitable is represented in Figure-A.11.1. The power requirement of this sector is 490 MW and hence there is a potential of about 690 MW for export to the grid. At present some of the units are having the cogeneration systems, but non of the unit has fully exploited the cogeneration potential. The details of the individual units need to be studied before arriving at the exact potential in this sector.

Fig: A-11.1

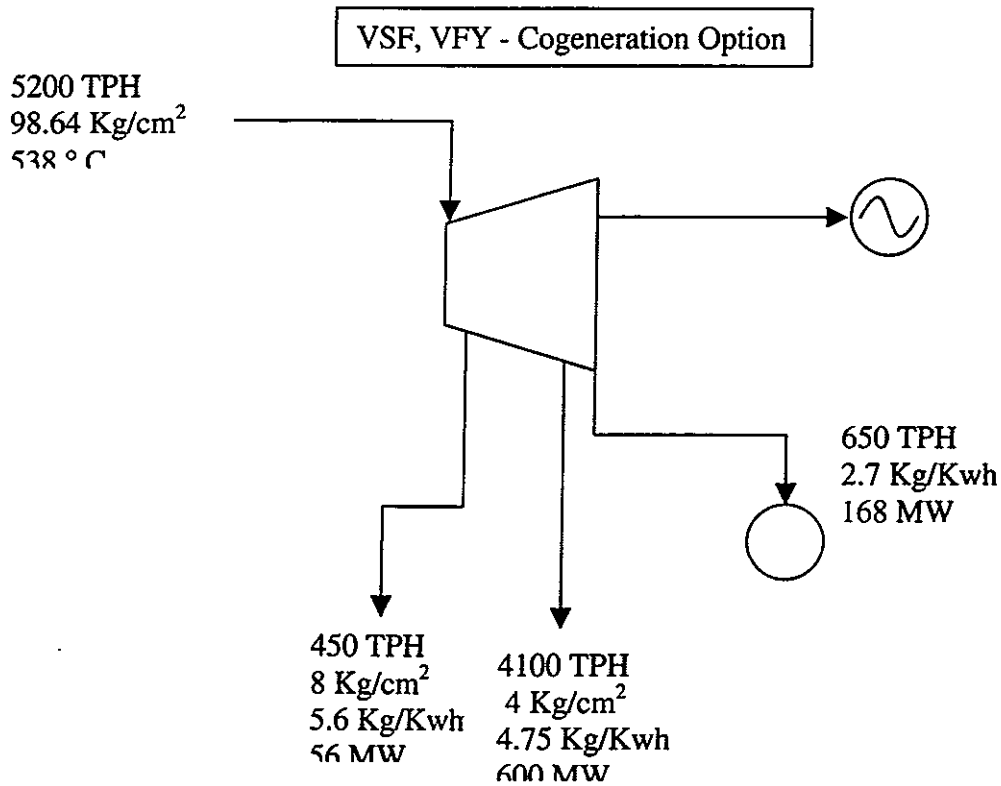

SECTOR: IRON AND STEEL INDUSTRY

Introduction

Steel is crucial to the development of any modern economy and is considered to be the backbone of the human civilisation. The level of per capita consumption of steel is treated as one of the important indicators of socio-economic development and living standard of the people in any country. It is a product of a large and technologically complex industry having strong forward and backward linkages in terms of material flow and income generation. All major industrial economies are characterised by the existence of a strong steel industry and the growth of many of these economies has been largely shaped by the strength of their steel industries in their initial stages of development.

Historical Perspective

The finished steel production in India has grown from a mere 1.1 million tonnes in 1951 to 23.372 million tonnes in 1997-98. During the first two decades of planned economic development, i.e. 1950-60 and 1960-70 the average annual growth rate of steel production exceeded 8%. However, this growth rate could not be maintained in the decades to follow. During 1970-80, the growth rate in steel production came down to 5.7% per annum and picked up marginally to 6.4% per annum during 1980-90.

The Indian Steel Sector

Finished Carbon Steel: India is the 10th largest steel producing country in the world. This sector represents around Rs. 90,000 crores of capital and directly provides employment to over 5 lakh of people. The Indian steel sector was the first core sector to be completely freed from the licencing regime and the pricing and distribution controls. This was done primarily because of the inherent strengths and capabilities demonstrated by the Indian iron and steel industry. During 1996-97, finished steel production shot up to a record 22.72 million tonnes with a growth rate of 6.2% while in 1997-98 the finished steel production increased to 23.37 million tonnes, which was 2.8% more than the previous year. The total production of finished steel and the share of main and secondary producers during 90's and upto the present are given in Table – A.12.1:

Table-A.12.1: Production of finished Steel in India

(In million tonnes)

Year	Main Producers	Secondary Producers	Total
1991-92	7.96 (55%)	6.37 (45%)	14.33
1992-93	8.41 (55%)	6.79 (45%)	15.20
1993-94	8.77 (57.6%)	6.43 (42.4%)	15.20
1994-95	9.57 (53.8)	8.25 (46.2%)	17.82
1996-96	10.59 (49.5%)	10.81 (50.5%)	21.40
1996-97	10.54 (46.4%)	12.18 (53.6%)	22.72
1997-98	10.44 (44.6%)	12.93 (55.4%)	23.37

Long Term Demand-Availability Projections of Finished Steel

In order to have a long term perspective and planning, a Working Group for IXth Five Year Plan was constituted for iron and steel sector under the aegis of Planning Commission. The Working Group deliberated upon all aspects including supply-demand projections for finished steel during the terminal years of VIIIth and IXth Five Year Plans i.e. 1996-97 and 2001-02, taking a GDP growth rate of 5% during the VIIIth Plan and 6% thereafter and a GDP elasticity of demand for steel of 1.33. The Working Group also suggested various strategies for an integrated and harmonious growth of the steel sector during IXth Plan period and thereafter.

The Ministry of Steel (9th Plan Working Group) has estimated that the demand for finished steel (including demand for exports) in 2001-02 would touch 38.68 million tonnes. The domestic availability of finished steel from all sources for 1997-98 was about 23.37 million tonnes. It is expected that by 2001-02, it would be 38.01 million tonnes. The projected availability is almost adequate to meet the domestic demand and also export potential of 6 million tonnes as identified by the Working Group during 9th Five-Year Plan period. The installed capacity is expected to reach 43.606 million tonnes by the end of the Ninth Five-Year Plan. Similarly, by 2006-07 the demand for finished steel is estimated to be of the order of 48.80 million tonnes, whereas production in the country would be 57.80 million tonnes, providing adequate surplus for meeting the projected export potential of 9 million tonnes.

The major public sector integrated steel plants of SAIL including IISCO and RINL, would be able to contribute about 11.449 million tonnes and 2.41 million tonnes respectively.

Energy Consumption Scenario

The conversion of iron ores into rolled steel products is a highly energy intensive process. Coking coal is the main source of energy in steel works. Typically, 1000 Kg. Coking coal blend is carbonised to produce 630 Kg. of hard coke, which is adequate to produce 900 Kg. of hot metal. In an integrated steel works, the coke ovens and the blast furnaces are net producers of energy in the form of coke oven and blast furnace gases.

The coke oven gases are surplus after meeting the internal requirements of the coke ovens, sinter plants and blast furnaces.

A modern integrated steel plant needs around 1000 to 1300 Kg. of steam and about 400 to 500 Kwh of electricity in addition to the coking coal, for supplying its total energy requirements per ton of steel produced. The existiong material and energy flow in Indian integrated steel mills is represented in Fig : A.12.1

Fig: A12.1

Material and Energy flow in Indian Steel

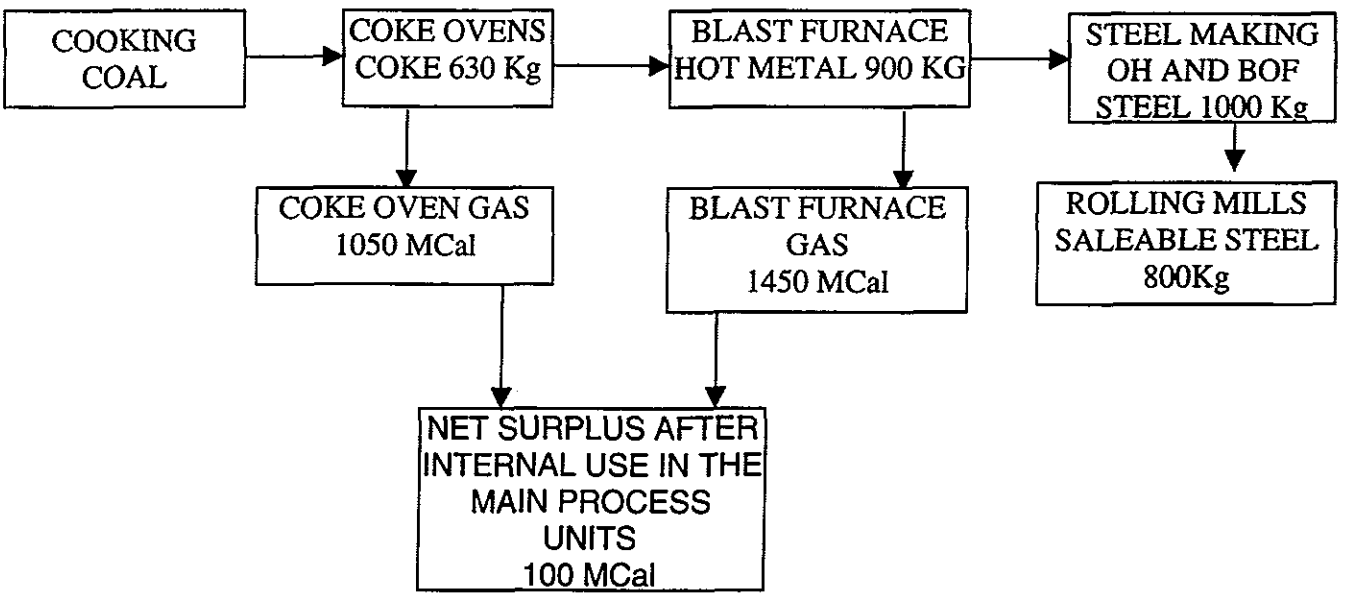

Cogeneration Potential

Assumptions made in evaluating the cogeneration potential:

The following assumptions are made in the evaluation of the technical potential for cogeneration in the iron and steel sector.

- Only the integrated steel mills are considered in the evaluation of the technical cogeneration potential in the iron and steel sector.
- The bottoming system of cogeneration with a waste heat boiler with a suitable steam turbine is considered as the most suitable cogeneration system in the iron and steel sector.

Technical cogeneration potential:

An integrated steel plant has the potential to produce all its power and steam requirements, by utilising only one source of primary energy, namely, coking coal. The

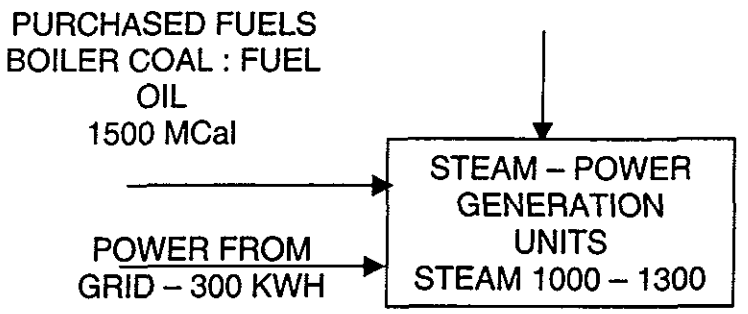

flow chart of the material and energy balance of an integrated power and steam system is represented in Figure A.12.2.

Fig : A12.2

COMBINED CYCLE STEAM – POWER SYSTEM

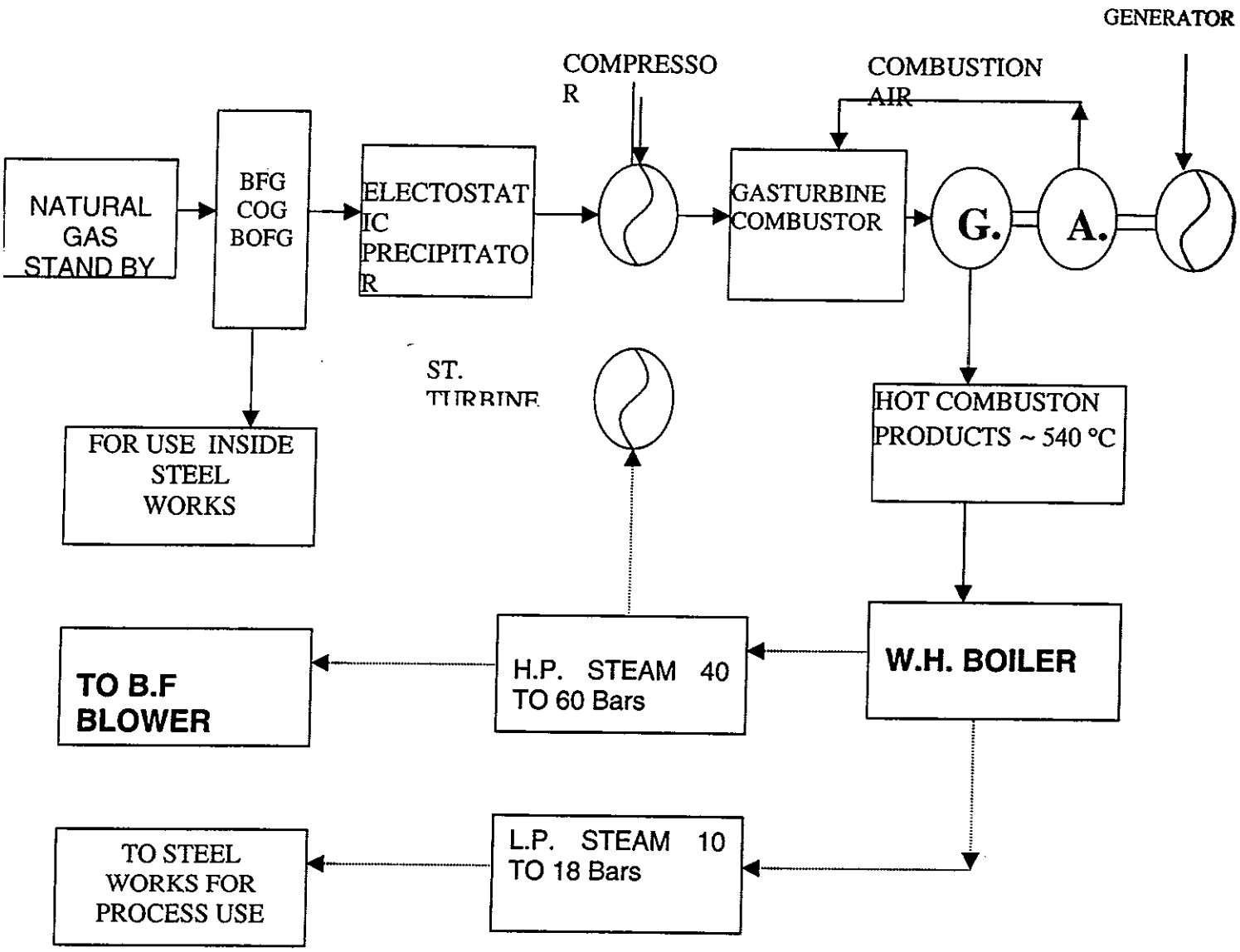

There exists a potential of about 300 Kwh per tonne of finished steel in an integrated steel plant. The production capacity of the integrated steel mills is about 14.16 million tons per annum. Hence the overall cogeneration potential in the integrated steel mills is about 530 MW. The power requirement of the integrated steel mills work out to about the same and hence the suitable cogeneration system in the integrated steel mills will make them self sufficient thus avoiding their dependency on the grid power

There are few steel plants which have already installed cogeneration systems which are in general sub optimal. As per the available information, the installed capacity of the cogeneration systems in the entire sector is about 1377 MW as of 1997-98. However, the self generation is only to the extent of 7230 Gwh in the year 1997-98, which shows a capacity utilisation of just 65%. The estimated potential in the integrated iron and steel plants need to be cross checked with the existing systems in the plants under argument.

Conclusion

There is scope for the technical cogeneration potential in the Indian integrated iron and steel mills. The total technical potential, internal consumption and the export potential are given as under.

Total technical cogeneration potential	: 530 MW
Internal consumption	: 530 MW
Export potential	: Nil

Fig : A12.3

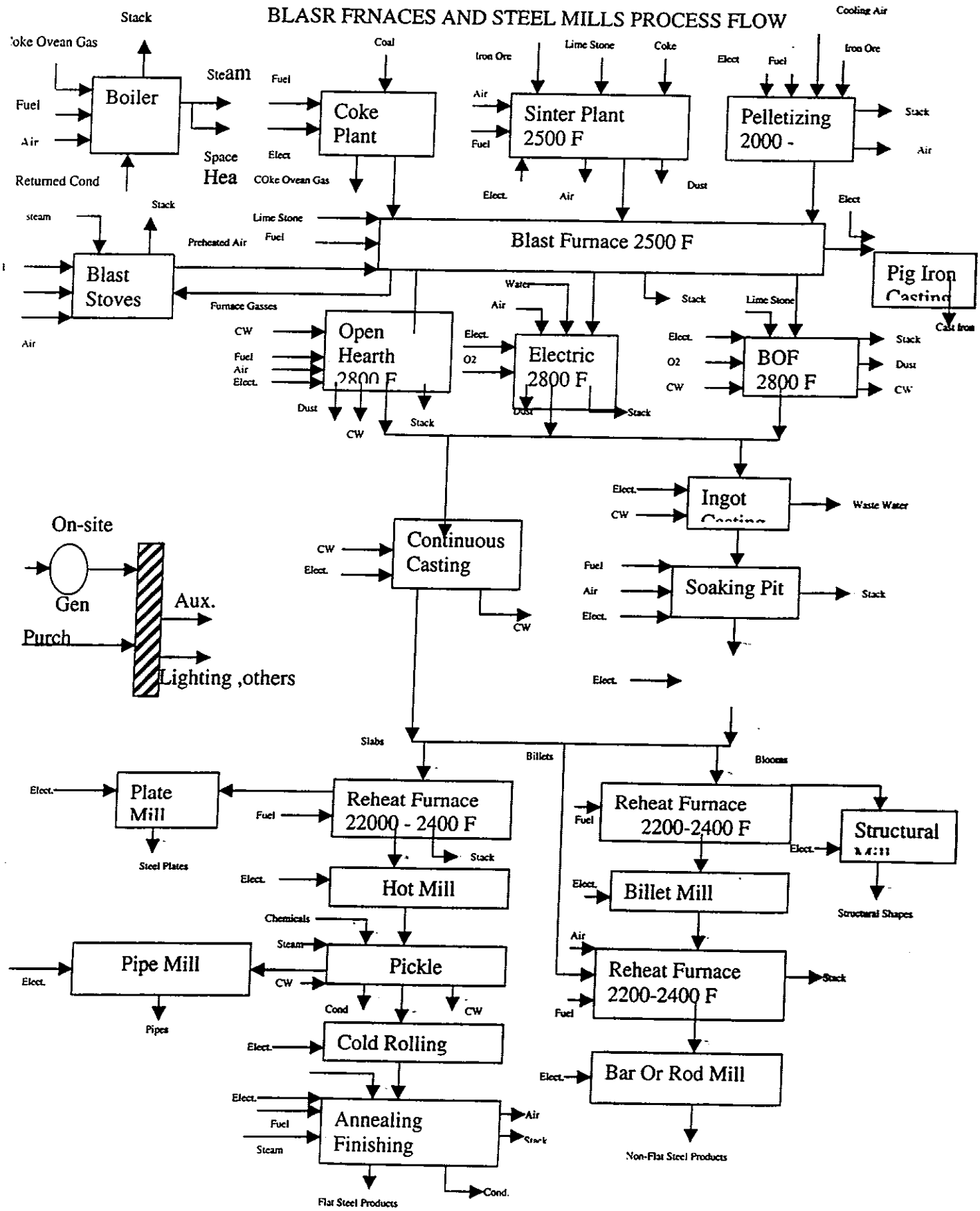
BLASR FRNACES AND STEEL MILLS PROCESS FLOW
Stack
Coke Ovean Gas
Boiler
Fuel
Air
Returned Cond
Steam
Space
Hea
Coke Plant
Coal
Fuel
Elect
COke Ovean Gas
Iron Ore
Lime Stone
Coke
Sinter Plant 2500 F
Air
Fuel
Elect.
Air
Dust
Elect
Fuel
Iron Ore
Cooling Air
Pelletizing 2000 -
Stack
Air
Elect
steam
Stack
Blast Stoves
Air
Lime Stone
Preheated Air
Fuel
Blast Furnace 2500 F
Pig Iron Casting
Cast Iron
Furnace Gasses
Water
Air
Stack
Lime Stone
CW
Open Hearth 2800 F
Fuel
Air
Elect.
Dust
CW
Stack
Elect.
O2
Electric 2800 F
Dust
Stack
Elect.
O2
CW
BOF 2800 F
Stack
Dust
CW
Elect.
CW
Ingot Casting
Waste Water
On-site
Gen
Purch
Aux.
Lighting ,others
CW
Elect.
Continuous Casting
CW
Fuel
Air
Elect.
Soaking Pit
Stack
Elect.
Slabs
Billets
Blooms
Elect.
Plate Mill
Steel Plates
Fuel
Reheat Furnace 22000 - 2400 F
Stack
Elect.
Hot Mill
Chemicals
Steam
Pickle
Cond
CW
Elect.
Pipe Mill
Pipes
CW
Elect.
Cold Rolling
Elect.
Fuel
Steam
Annealing Finishing
Air
Stack
Cond.
Flat Steel Products
Fuel
Reheat Furnace 2200-2400 F
Elect.
Structural Mill
Structural Shapes
Elect.
Billet Mill
Air
Reheat Furnace 2200-2400 F
Stack
Fuel
Elect.
Bar Or Rod Mill
Non-Flat Steel Products

Fig: A.12.4

IRON AND STEEL FORGING
PROCESS FLOW

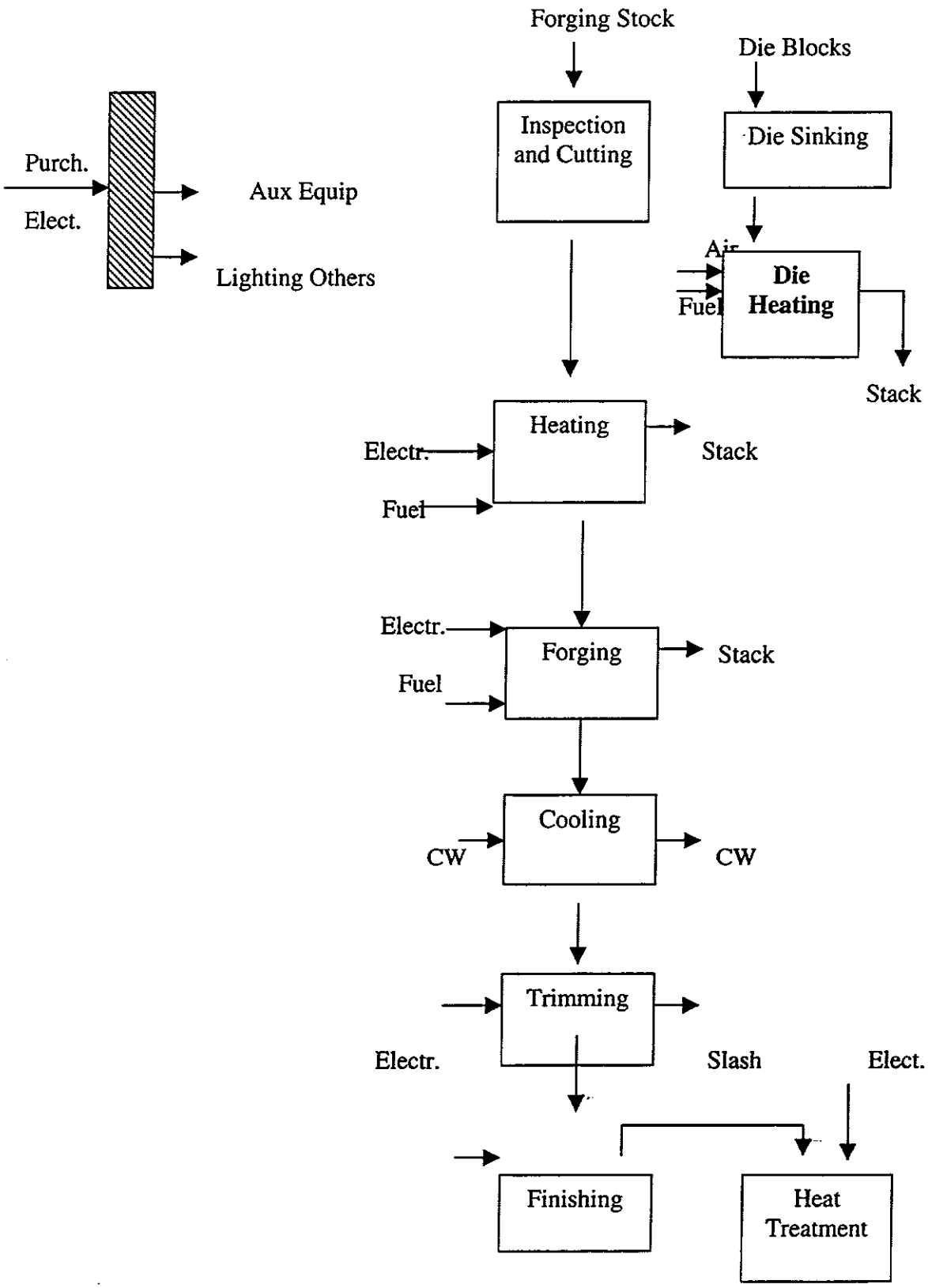

Fig: A12.5

GRAY IRON FOUNDRIES
PROCESS FLOW

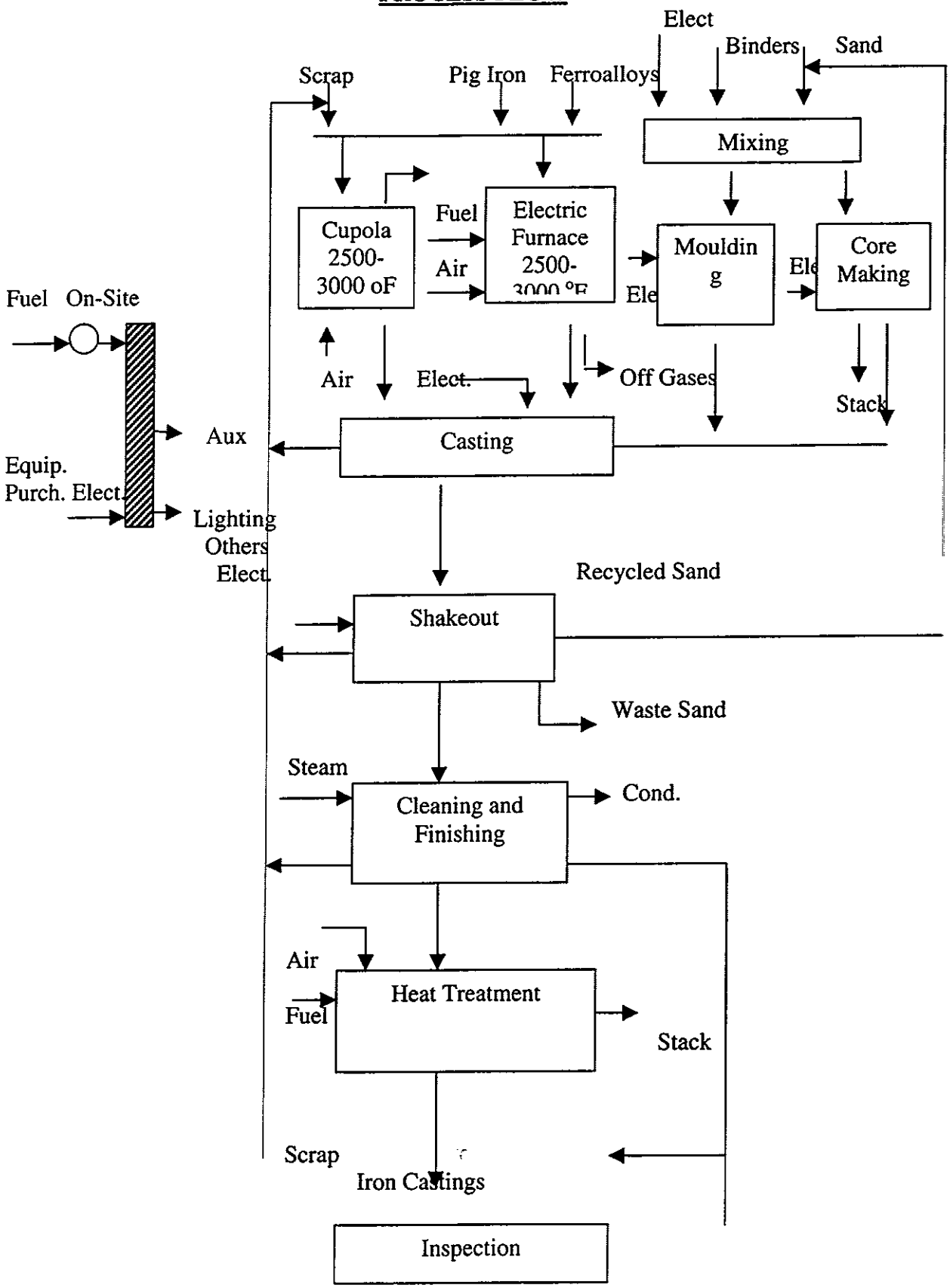

SECTOR: FERTILIZER

Introduction

Agriculture accounts for a third of India's national income. It provides employment to over 70% of the population. Fertilizers play a key role in improving the crop yield and hence are integral to modern farming.

Types of Fertilizers

The main nutrients that deplete with successive cropping are nitrogen (N), phosphorus (P) and potassium (K). Fertilizers supplement the natural deficiency as well as the depletion of nutrients. Organic manure (such as cow dung) fulfils a small part of total nutrient requirement.

For optimum yield, a combination of fertilizers depending on the state of soil, seed, crop, climatic conditions, etc is used. Excessive and/ or imbalanced use of fertilizers can adversely affect soil. Indian farmers, who are generally uneducated, are not able to take a scientific decision on the fertilizer mix from a long-term point of view. They use the cheapest mix. This has resulted in damage of soil quality due to excessive use of urea, which is cheaper than P or K fertilizers. The key fertilizers used in India are:

Urea, which supplies around 83% of the total nitrogen requirements. It is manufactured from ammonia in an energy intensive process. Natural gas is the preferred feedstock as it results in low variable cost compared to naphtha. At present, only 50% of the total domestic capacity is gas-based, about 30% is based on naphtha and rest on fuel oil and coal.

Single super phosphate supplies 19% of the total phosphatic nutrients. It is manufactured by treating rock phosphate with sulphuric acid and calcium. Both rock phosphate and sulphur are imported.

Di-ammonium phosphate meets 50% of phosphatic and 8% of nitrogenous nutrients. Rock phosphate is the main feedstock. Phosphoric acid is manufactured by treating rock phosphate with sulphuric acid. It is then reacted with ammonia to manufacture DAP. The integrated manufacturers have their own ammonia, phosphoric acid and sulphuric acid plants, while sulphur and rock phosphate are imported. Potassium fertilizers are not manufactured in India due to the non-availability of the basic feedstock. Muriate of potash (MOP) is imported from countries like Canada, Jordan and Germany.

The domestic fertilizer demand was met largely by imports till the mid-1970s. To reduce import dependence, the government implemented a Retention Pricing Scheme (RPS) in 1977 to encourage domestic capacity creation. Earlier, all fertilizers were under

government control. However, in 1992-93, potassium and phosphatic fertilizers were deregulated.

Industry

At present, there are 64 large sized fertilizer units in the country. Of these, 39 units produce urea and 18 manufacture DAP among other fertilizers. Besides the large units, there are 79 medium and small scale manufacturers. The country is self-sufficient to the extent of 92% in case of nitrogen nutrients. Therefore, the government decided to stall any additional capacity in urea.

As of FY2000, the installed capacity of nitrogen (N) nutrients was about 11 mn tons and that of phosphate (P) nutrients was 3.6 mn tons, making India the third largest producer in the world. Production of N&P was 10 mtpa and 3 mtpa respectively while urea production (contains 46% nitrogen) was 18.4 mtpa. DAP production declined marginally, by 1%. The overall fertilizer production for the said period increased by 5.3% yoy.

Urea being the most affordable fertilizer, dominates the nitrogenous fertilizers, constituting more than 80% of consumption. DAP is the dominant phosphatic fertilizer accounting for 58% of consumption, followed by SSP with a 20% share. As mentioned earlier, potashic fertilizers are not manufactured in the country and are completely imported. During the year, the NPK ratio deteriorated to 8.5:3.1:1 from 7.9:2.9:1 in FY99. The trend in the consumption is given in Table-A.13.1.

Table-A.13.1: Trends in consumption (In Million Tonnes)

	Nitogen	Phosphate	Potash	Total
1960-61	0.2	0.1		0.3
1970-71	1.5	0.5	0.2	2.2
1980-81	3.7	1.2	0.6	5.5
1990-91	8	3.2	1.3	12.5
1995-96	9.8	2.8	1.1	13.7
1996-97	10.3	2.9	1.0	14.2
1997-98	11.1	3.9	1.3	16.3
1998-99	11.3	4.0	1.3	16.6

Source : FAI, GoI

The production and the consumption pattern is given in the table-A.13.2

Table-A.13.2: Production and Imports of NPK fertilizers:

Year	Production, 000 mt		Imports
	Nitrogen	Phosphate	N+P+K
1960-61	98	52	419
1970-71	830	229	629
1980-81	2164	841	2759
1990-91	6993	2052	2758
1995-96	8777	2558	4008
1996-97	8599	2556	2014
1997-98	10086	2976	3246
1998-99	10477	3169	1594

Source: GoI

Against an all-India average consumption of 90 kg/hectare, states like Punjab and Andhra Pradesh consume over 135 kg/ hectare, while economically underdeveloped states like Madhya Pradesh and Orissa consume about 30 kg/hectare.

Cogeneration potential: Technical cogeneration potential is available in the case of naptha based fertiliser units. Almost all the fertiliser plants commissioned after 1988 have the gas turbine based cogeneration plants which is more efficient when compared with the old systems. The difference in the design generation of power between the two systems is about 0.3 MW per TPD of ammonia. The total capacity of naptha based ammonia plants is about 28400 TPD, of which 11,500 TPD capacity is established after 1988. Therefore, cogeneration potential of 0.3 MW per TPD of ammonia is available in the case of naptha based ammonia plants of capacity 16900 TPD. On this basis, the technical cogeneration potential in the fertiliser sector is about 210 MW. The existing cogeneration scheme is shown in Figure-A.13.1 and the one considered is given in Figure- A.13.2.

Conclusion: The installed captive power capacity in the fertiliser sector is about 935 MW. Of the total installed capacity, Gas based power generation forms about 230 MW and the diesel based power generation is nearly 95 MW. The steam based cogeneration is about 610 MW. This sector still depends on the grid power to the extent of about 2700 Gwh per year which forms about 45% of the total energy consumed in the sector. The additional cogeneration potential of about 210 MW will help this sector to avoid the dependency of the grid power to some extent. However, there is no export potential for power from this sector.

Fig-A.13.1: Existing scheme of cogeneration system

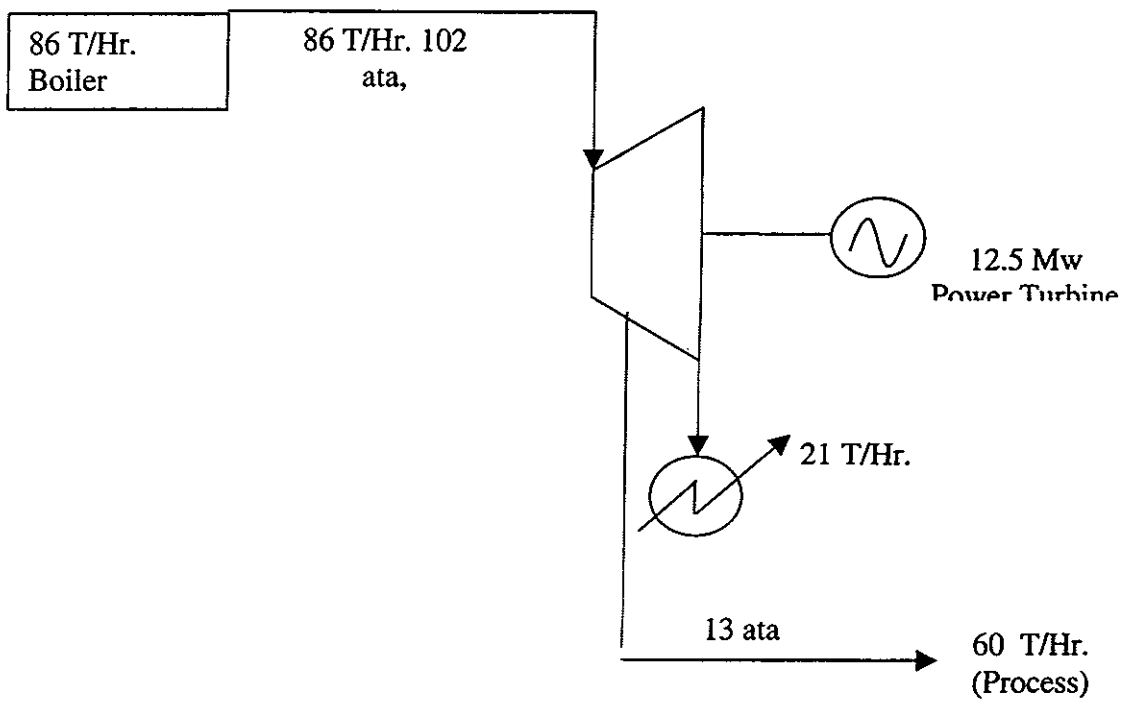

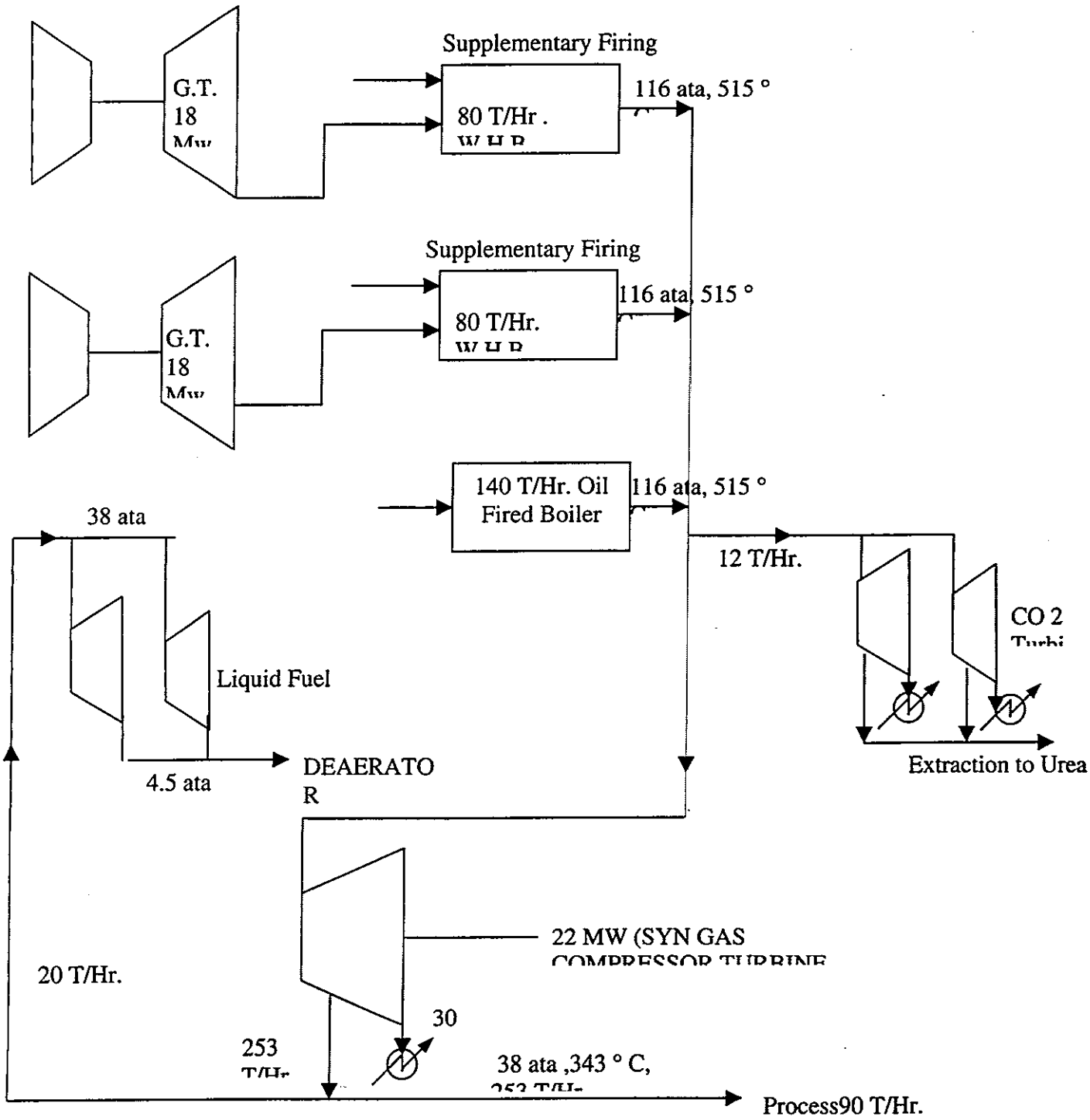
Supplementary Firing
G.T.
18
80 T/Hr .
116 ata, 515 °
Supplementary Firing
G.T.
18
80 T/Hr.
116 ata, 515 °
140 T/Hr. Oil
Fired Boiler
116 ata, 515 °
38 ata
12 T/Hr.
CO 2
Liquid Fuel
4.5 ata
DEAERATO
R
Extraction to Urea
22 MW (SYN GAS
20 T/Hr.
30
253
38 ata ,343 ° C,
Process90 T/Hr.

Fig-A13.2: Proposed scheme of cogeneration system.

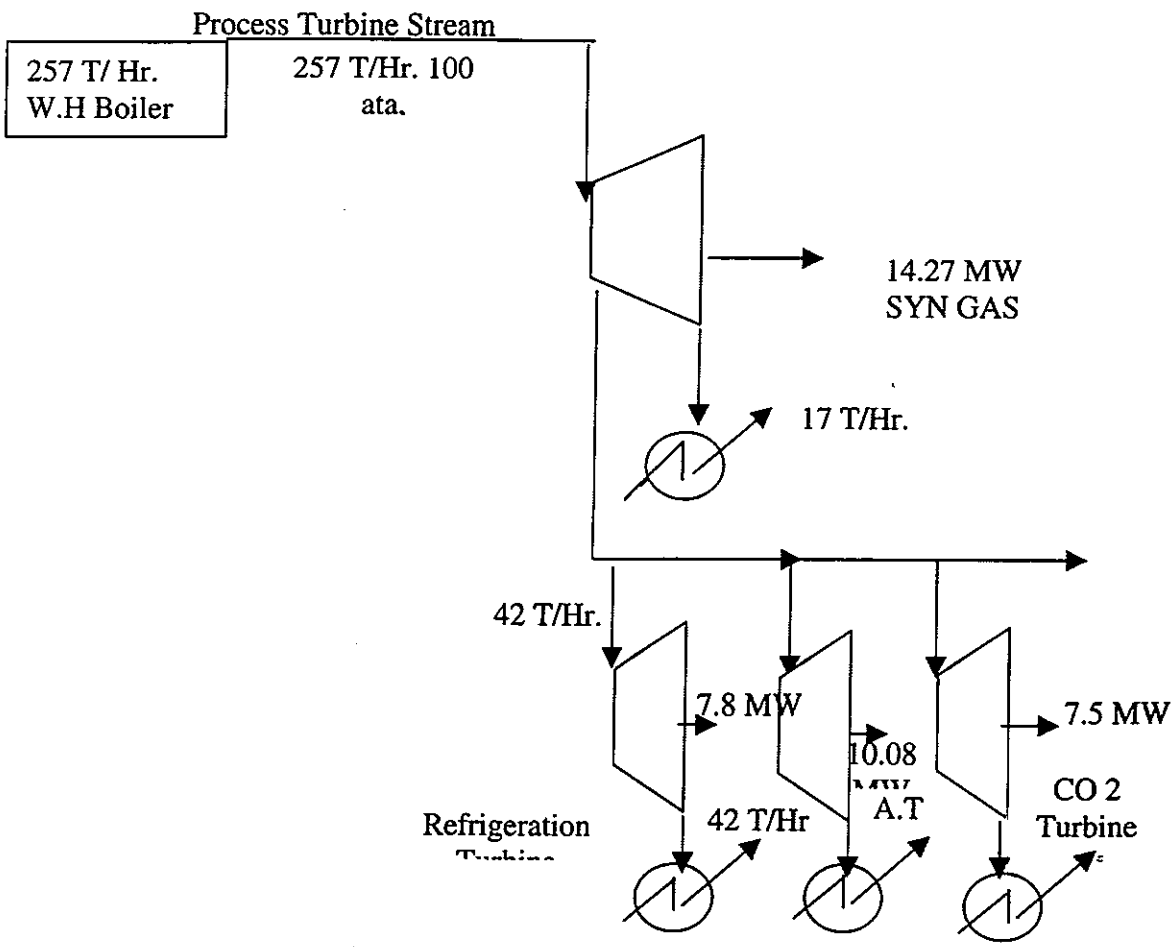

NITROGENEOUS FERTILIZERS (AMMONIA) – PROCESS FLOW

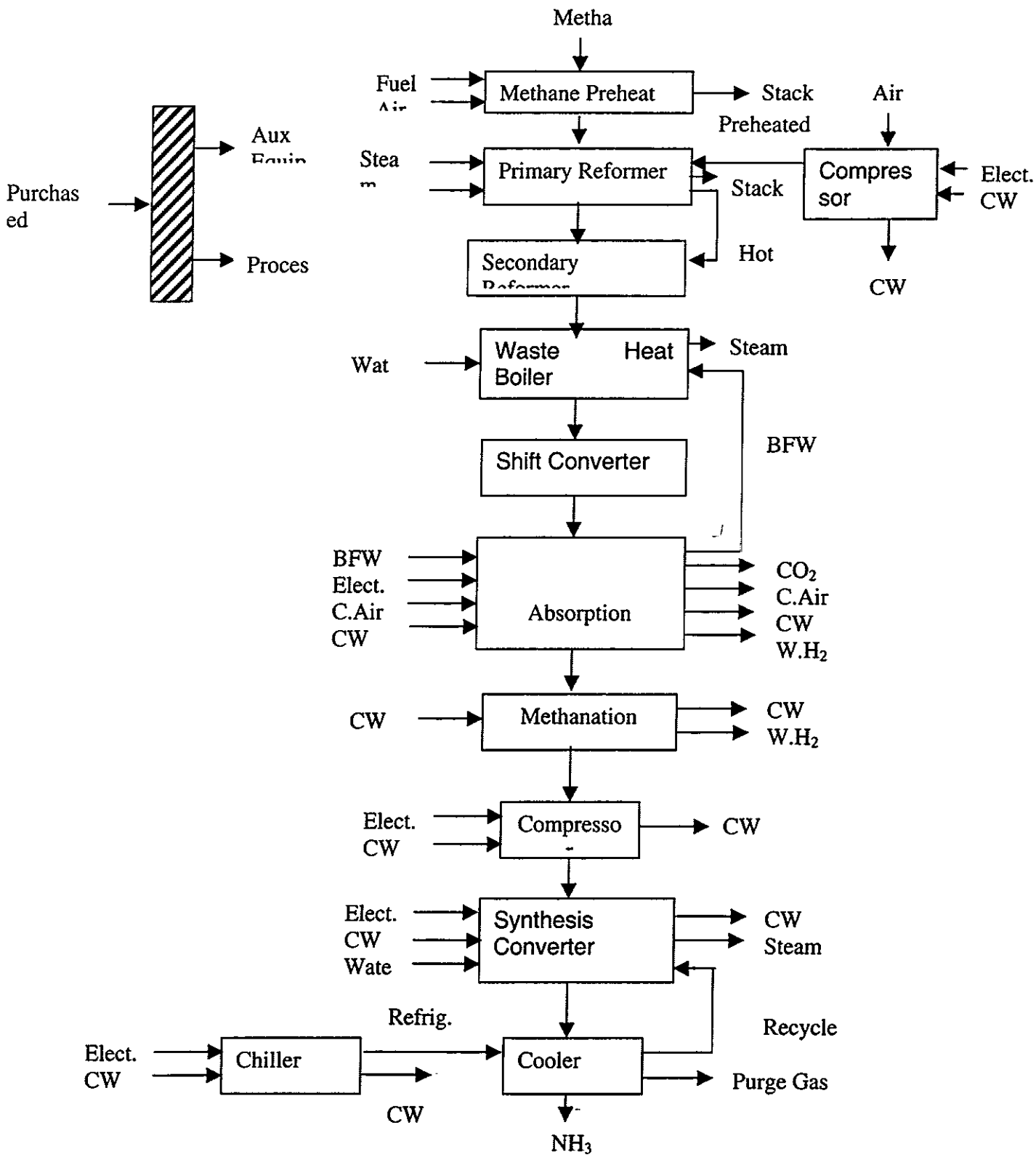

SECTOR: TYRE INDUSTRY

Introduction

In India, the tyre industry was born in 1926 with the establishment of the first tyre company – Dunlop Rubber Company. As the automobile sector began to take roots in the country, the tyre industry saw the entry of many players and concurrently grew until the late 70s. With waves of liberalization sweeping the land in 1992, the industry saw the entry of many players as part of joint ventures.
The last decade saw an average annual growth rate of 9.2%. However, in 98 production grew by just 4%. The Indian tyre industry went back on the growth path in 2000. Aided by a robust growth in most segments of the Indian automobile sector, tyre production grew by 7% during the year.

Market Size, Segment and Growth

The Indian tyre industry is worth about Rs90bn in terms of value in FY2000. In terms of volumes, the industry produced 42.14 mn units of tyres in FY2000, at a CAGR of 9.2% in the last decade. Table- A14.1 indicates the production figures for the tyre industry vis a vis the production trend in the automobile industry.

Table - A14.1: Production Volumes

Year	Tyres (mn nos)	Auto (mn nos)
FY90	17.44	2.281
FY91	18.05	2.412
FY92	17.89	2.172
FY93	19.95	2.047
FY94	24.27	2.386
FY95	28.49	2.996
FY96	30.42	3.686
FY97	32.80	4.206
FY98	34.20	4.260
FY99	37.56	4.477
FY2000	42.14	5.098
CAGR	9.2%	8.4%

Source: SIAM and ATMA

Major Players

There are several players in the manufacture of tyre. The details of various manufacturers and the segment wise market share of those players for the financial year 2000 is given in table-A.14.2

Table-A.14.2:Segmentwise Market Share Of Major Players (%) Q1 FY 2000

Company	T&B	LCV	Cars	Jeeps	Motor Cycles	Scooters	Tractor (rear)	Tractor (front)	Tractor (trailer)	Moped
Apollo	17	6	2	4	0	3	11	7	7	0
Birla	9	9	2	2	0	0	3	6	0	0
Ceat	14	16	17	30	11	20	18	20	18	0
MRF	19	23	30	30	36	37	25	26	25	0
Goodyear	5	5	21	4	0	0	21	16	1	0
JK Tyres	22	24	18	17	0	0	14	13	5	0
Modi	14	10	5	9	3	3	9	10	10	0
TCIL	1	0	0	1	0	0	0	0	0	0
Balkrishna	0	7	0	2	0	4	0	2	31	3
Metro	0	0	0	0	0	0	0	0	0	0
Falcon	0	0	0	0	22	17	0	0	0	0
Srichakra	0	0	0	0	29	15	0	0	0	97

Source: ATMA / Note: ATMA has stopped giving company-wise figures since June 1999.

Manufacturing Process

The tyre manufacturing process is represented in the flow chart in Fig-A.14.2

Energy Consumption Pattern

In a typical 11.5 lakh numbers per annum production plant, the total electricity demand is about 7 MW, of which, the banbury mixer accounts for about 1 MW of power. The specific steam consumption is about 7.5 ton per ton of tyre. Some of the tyre plants are having the cogeneration system with which the steam demand of the plant and some electricity demand is met.

Cogeneration Potential

The power requirement of a typical 11.5 lakh number per annum plant capacity is about 7 MW and a production capacity of 6 MW through cogeneration is considered. The banbury mixer of the tyre plant will take a load of about 1 MW and this load can not be met through the cogeneration system. The cogeneration system considered is a boiler of pressure 60 Kg. per Sq.Cm, with a steam generation capacity of 53 TPH and a back pressure cum condensing turbine. The cogeneration system considered is represented in Figure-A.14.1

Technical Cogeneration Potential

The *estimated net technical cogeneration potential is about 5.5 MW in a 11.5 lakh* number per annum capacity plant. On this basis, the total cogeneration potential in this sector is about 110 MW. This estimation is arrived at taking into account the smaller producers and factories which are already having the cogeneration system. The cogeneration potential already tapped is to the extent of about 45 MW. The power generation will be mainly for internal consumption and there will not be any opportunity for export.

Fig: A.14.1: Cogeneration system configuration in a typical 11.5 lakh numbers tyre per annum production plant

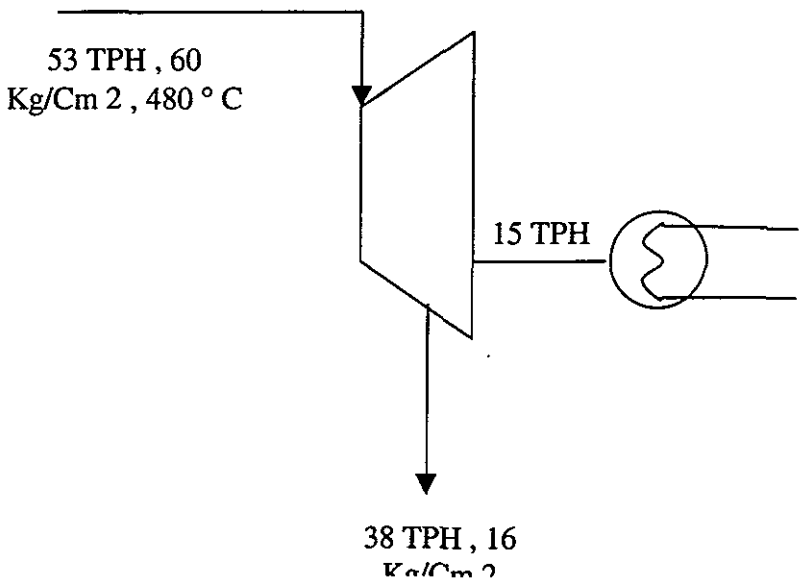

Fig: A.14.2: Flow chart for the manufacture of Tyre

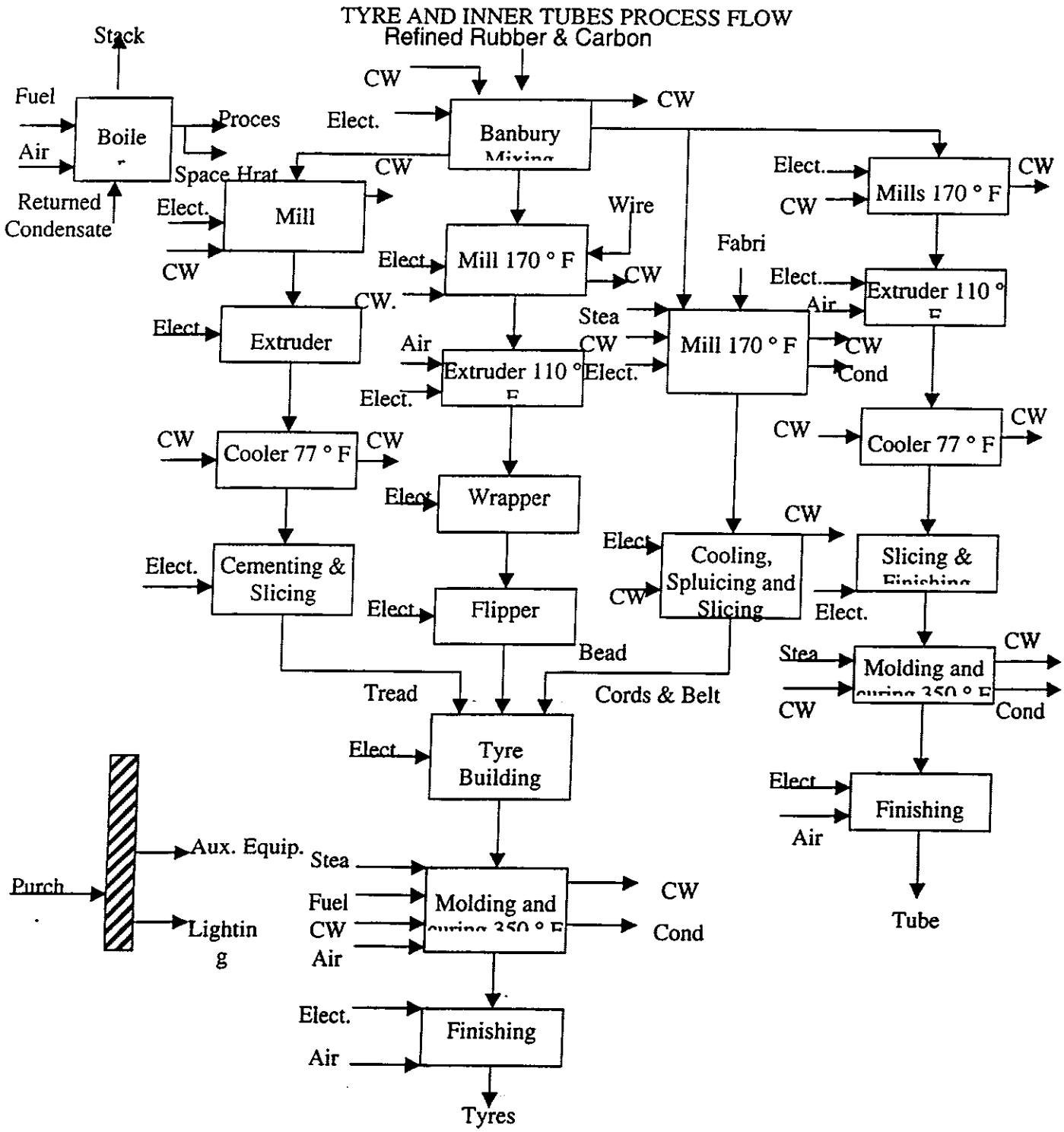

SECTOR: FABRIC WASH

Background

Major products in the fabric care category can be segmented as follows

Pre-Wash

Synthetic detergents
- Bars or cakes
- Powder
- Liquids

Laundry soap (oil-based)

Oil based laundry soaps, which were being used as washing medium for more than a century throughout the world, are being phased out. Synthetic detergents offer better value for money and incorporate modern technology that is just 3-4 decades old. Synthetic detergents are available in concentrate and ordinary powder form.

Post-Wash

Products in post-wash category include
- Fabric whitener/ Blue
- Fabric softener
- Starch

Other fabric care products like bleach, stain removers and color fixing agents have small niche markets.

Market Size and Growth

The fabric wash comprising of laundry soaps, synthetic detergents bars and powder is estimated to be 2.8mn tpa valued at Rs37.5bn (Rs45bn at MRP). This comprises of laundry soaps 0.6mn ton (Rs6bn) and synthetic detergent market of 2.2mn tpa valued at Rs31bn consisting of bars and powders.

Laundry soap market is declining at the rate 5-6% pa, Bars have been growing at 5-6% pa, while the synthetic detergent market is growing at 10-12% pa.

As products have same end application, there is cross elasticity in demand for bar and powders. Demand growth for powders will record higher growth with rising urbanization, growing standards of living and greater proliferation of washing machines. The bar will

grow on the back of higher rural demand. Concentrate detergent sales are also expected to increase as consumers upgrade in the value chain.

Rural market has been growing at a faster pace on the lower base than urban markets, as major players make aggressive efforts to penetrate the rural areas.

Manufacturing Process and Economics

The major ingredients in detergents are

- Active detergents (LABSA-Linear Alkyl Benzene Sulphonic Acid or AOS- Alpha Olefin Sulphonates) which do the cleaning of the clothes.
- Builder - Sodium Tripolyphosphates, soda ash.
- Fillers - Calcide Dolomite soap stone which just adds to the volumes.
- Flow aids such as silica.

Some of the premium detergents have fluorescers with anti-depository characteristic (SCMC) which prevents re-deposition of particles after washing. Some detergents also have bleach and enzymes. Enzymes are of different types like Protease, which removes protein stains and lipase which removes fat stains.

Detergent powder manufacturing involves sulphonation, neutralization and drying. Linear alkyl benzene (LAB) is sulphonated with the help of sulphuric acid/ oleum which results into LAB sulphonic acid in the form of slurry. The converted product is diluted with water to remove acid mix, which is separated by gravity and sulphonic acid is used for various products. This slurry, when neutralized with caustic soda which gives active paste. The active paste is mixed with builders, solid suspending agents and other adhesives and spray dried to produce synthetic detergent. This powder is cooled and necessary perfume is added. The resultant product is packed for dispatch.

Detergent cake is produced by mixing the various detergent raw-materials like sulphonic acid, sodium silicate, caustic lye, soda ash etc in a mixture. The mix is plodded and converted into bars, cut to required size, stamped, wrapped and packed.

Cogeneration Potential:

In the existing fabric wash manufacturing units, there is a potential to introduce Gas based cogeneration system. The total available technical potential is about 85 MW and there will not be any potential for export.

SECTOR: HOTELS

Introduction

Indian Hotels Company Ltd (IHCL) operating under the Taj brand, is the largest hotel chain in the country. EIH operating under the Oberoi brand is the second largest hotel chain followed by ITC Hotels (ITCH). Asian Hotels (AHL), Bharat Hotels (BHL), Oriental Hotels as well as Hotel Leela Venture (HLV) are other major hotels.

While the 5-star and 5-star deluxe and to some extent the 4-star hotels are the domain of renowned hotel companies, an unorganized market exists for hotels operating below these ratings. Hotel companies such as EIH and ITCH as well as international hotel chains are aggressively entering into the mid-budget hotel segment.

Average room rate (ARR) and occupancy are the two most critical factors that determine the profitability, since most of the marginal revenue gets added to the bottom-line. ARR in turn depends upon location, brand image, star rating, quality of facilities and services offered and the seasonal factor.

Demand

Demand for hotels in cities like Mumbai and Delhi are the highest. In fact at present, out of the total of 19,000 5-star and 5-star deluxe rooms in the country, 50% are accounted for by these two cites. These cities along with Bangalore and Chennai serve as gateway to important tourist destinations.

Presently, the total 5 & 4-star room capacity in the four metro cities is close to 13,000rooms. Mumbai and Delhi account for the bulk of the total room availability. In Mumbai room availability is expected to increase by another 3,100 rooms in the next 2-3 years.

Chain hotels like IHCL, EIH and ITCH are better placed than single locations hotels like BHL, AHL. Though the latter have hotels at strategic location (Delhi) the risk associated with single location hotel is always higher.

Growth Rate

In the long-term the hotel industry in India has latent potential for growth. This is because India is an ideal destination for tourists as its is the only country with the most diverse topography. At present India attracts approximately 2.5mn tourists every year which is just 0.4% of the world tourist arrivals.

Energy consumption Scenario

The major sources of energy for the Hotel sector is the electricity, furnace oil, high speed diesel oil and LPG. While furnace oil is generally used to meet the steam demand for the laundry and other services, diesel oil is used for the power generation in the diesel generating sets during power failure periods. In some hotels self generation through DG sets is adopted to ensure the quality power during the business hours. Energy cost in the hotel sector is reported to be about Rs. 300 to 400 per room per day on an average. This is mainly due to the high electricity cost.

Technical Cogeneration Potential

Power interruptions in the hotel sector is not a likable one and many of the hotels are interested in having the uninterrupted, quality power supply to meet their customers demand. Also there exists a demand for the steam to meet the thermal energy needs and the excess steam capacity in some cases is used for the vapour absorption refrigeration.

In a typical 5 star hotel, the power requirement is about 1 MW per every 150 rooms and the steam requirement is roughly about 0.75 to 1 ton per hour. There is a technical potential to meet both the demand at a economical way and also to ensure the quality of the power made available to their customers. The system most suited is a furnace oil fired generator with a waste heat boiler. A one MW generator set is capable of producing about 0.75 ton of steam from the waste flue gases.

Conclusion

As mentioned earlier, in India there are 13000 rooms in the 5 and 4 star category hotels. The total power requirement of these hotels will be about 85 MW and the entire demand can be met by the furnace oil fired generators with waste heat boilers for the generation of steam. However, there will not be any potential for the export of power to the grid.

Technical potential for cogeneration in the Hotel industry	: 85 MW
Internal consumption	: 85 MW
Export potential	: Nil

Fig : A.16.1 Typical Cogeneration System for a 150 Room 5 Star Hotel

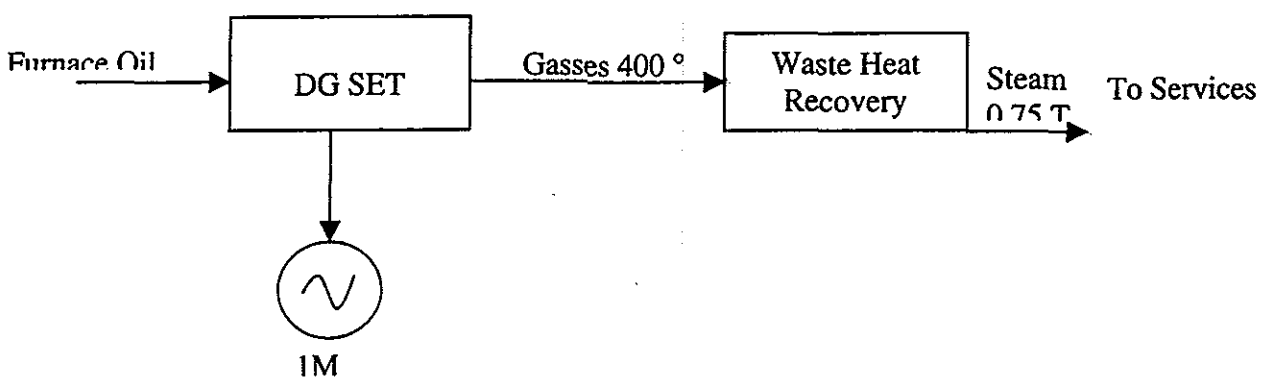

SECTOR: BREWERIES & DISTILLERIES

Introduction

The Indian liquor and beer Industries share common characteristics arising from a similar policy framework. Country liquor, Indian Made Foreign Liquor (IMFL) and beer are state subjects with each state controlling the duty structure and distribution. The incidence of import and export duties result in high cost for inter state movements. This has resulted in each state having the attributes of a separate market.

The country liquor segment. at more than 150 million cases (12 bottles of 750 ml) p.a. has distinct characteristics of its own and forms the largest component of this industry. This unbranded, highly potent alcohol drink is produced by distilleries - though sold through separate distribution channels. There also exists a thriving market for illicitly made country liquor. A major portion of state revenues from this industry accrue from the country liquor segment.

Ethanol

This is a downstream product of the sugar industry and the basic building block for a host of alco-chemicals.

Ethanol is of two types-

- Potable alcohol
- Industrial alcohol

Industrial alcohol is used as a feedstock for organic chemicals. There are 250 distilleries operating in the country with Maharashtra accounting for 20% and UP accounting for 15% of the total capacity. These two states along with Andhra Pradesh and Karnataka account for 80% of the total capacity. This is basically used as the building block for acetaldehyde, ethylene, glycol etc.

Manufacturing Process

1. Activation unit: At this phase, the raw materials will be transferred to bactches and diluted with water and then mixed with the salt of Aluminum Sulfate. They will sterilize as substrate. At this time, microorganism in powder form will be added to the solution. The temperature of the solution should be suitable for microorganism to increase. At this time, the activation process will be started. The adequate pressure, PH, and sufficient air, are also needed. After transferring the solution to the Bio-reactor, the second phase of Increasing will be started. Our solution, at this time, should be 108 cell in millimeter.

2-Propackation: At this step, exactly like the previous processes as mentioned above, will be carried out with controlled pressure, temperature, and PH. Each Bio-reactors should contain 18.000 Liter of 108 cell in millimeter solution.

3- Fermentation
The aforesaid solution will be vacumized. At the end 7% to 8% of Ethanol will be produced.
4- Distillation
By the use of converters, Distillation towers will distillate the solution, and at the end the produced Ethanol will be separated and concentrated.

Note
The production process will be semi continuos in Fermentation process, and continuos in Distillation process.

The Production of Alcohol in selected states and the end use pattern for Ethanol is given in Table 17.1 and Table 17.2 respectively.

Table - 17.1 (Lakh or 0.1 mn litres)

State	1995-96	1996-97	1997-98
Andhra Pradesh	1,267	1,535	1,545
Gujarat	575	620	615
Haryana	265	320	315
Karnataka	1,090	1,250	1,310
Maharashtra	4,350	5,275	5,350
Punjab	417	525	535
Uttar Pradesh	16,498	20,000	20,870

Table - 17.2 End Use Pattern for Ethanol

Users	% share
Formaldehyde	36
DMT	22
Pesticides	4
Pharma	11
Dyes and inter	6
Methylamines	4
Thinners	7
Others	10

Co-Generation Potential

The Three different configurations considered for cogeneration are shown in figures Fig -17.1 to 17.3.

Case 1: Single Stage Turbine

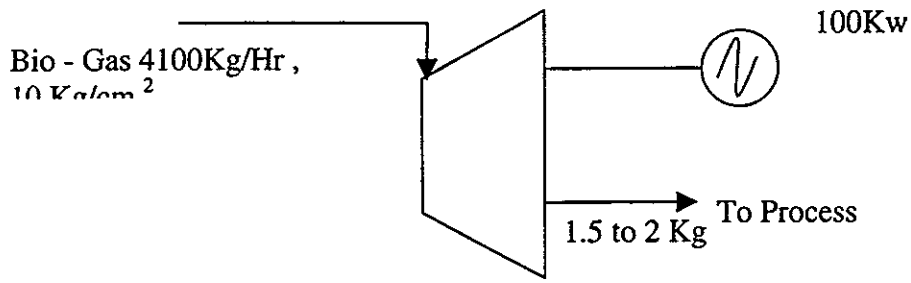

Case 2: Two Stage Turbine

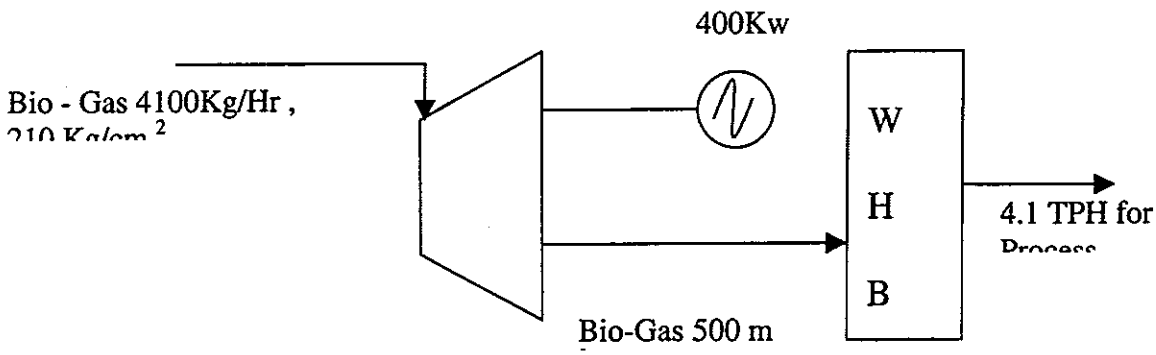

Case 3: Gas Turbine Route

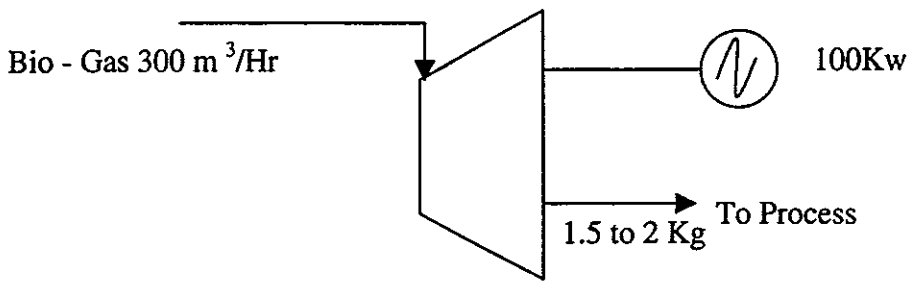

Sector: ALUMINIUM

Introduction

Aluminum production in India commenced in 1938 with the commissioning of Aluminum Corporation of India's (Indal) plant in technical and financial collaboration with Alcan, Canada having a capacity of 2,500 ton per annum. The plant started with sheet production using imported aluminum ingots.

In the 1970s, the government regulated and controlled the aluminum industry through price distribution controls and barriers to entry. The 1970 Aluminum Control Order compelled the Indian companies to sell 50 % of the aluminum produced for electrical purposes.

The demand for aluminum grew 6 % in the 1980. Aluminum demand post liberalization registered a growth rate of 12%. This coupled with the increase in the global aluminum prices ($1800/ ton in 1994) led to increased investments in this sector.

The downstream capacity in the aluminum industry spurted due to sufficient duty differential between aluminum ingots or primary metal and value added downstream products. In March 1993 while the duty on aluminum ingots was 25% the duty on downstream products was 70%. However with the change in the tariff structure undertaken in the 1997 budget, duty on semi-fabricated metal was lowered to 25%. This change adversely affected the fortunes of the downstream producers.

Demand

The consumption pattern of aluminum in India is different from the global consumption pattern. The demand for the aluminum industry has been predominantly from the electrical sector. This sector is the largest end user of aluminum in India accounting for 36 % of the total aluminum demand. The transport sector contributes to another 22 % of the total demand while the consumer durable and packaging sectors consume 12 % each. The construction sector consumes 7% of the total aluminum demand. Total domestic consumption was about 0.55Million ton in FY98.

Table A.18.1 Trends In Capacity (000 ton)

Year	Hindalco	Nalco	Balco	Indal	Malco	Total
1990-91	150	218	100	117	25	610
1991-92	150	218	100	117	25	610
1992-93	150	218	100	117	25	610
1993-94	150	218	100	117	25	610
1994-95	150	218	100	117	25	610
1995-96	210	218	100	117	25	610
1996-97	210	218	100	117	25	610
1997-98	242	230	100	117	25	654

Technology and Manufacturing process

There are six aluminum-manufacturing processes. These are the

- Hall-Herault Process
- Alcoa Smelting Process
- Toth Process
- Direct Reduction Process
- Carbo-Thermic Process
- Sub Halide Process.

These processes are described briefly in following paragraphs:

1. In the **Hall-Herault process** aluminum is manufactured in three stages involving bauxite mining, alumina refining, aluminum smelting.

   Bauxite mining is the first stage in the manufacturing process. This is conducted in benches through a share and dumper combination, which feeds the material to the crusher, where bauxite is crushed for conversion into alumina. Approximately 25 ton of bauxite yields 1 ton of alumina. Plant design is influenced by bauxite composition. The key variables are alumina silica content and mineralogical form of occurrence. Alumina refining is the second stage in a vertically integrated aluminum plant. Bauxite is converted into alumina through Bayer Process, the most economical and popular process used in alumina refining. Under the Bayer Process mineral impurities such as iron oxide and silica are removed from bauxite to ensure higher yield of alumina.

   Smelting, the final stage in the manufacture of aluminum metal, is an energy intensive process, the energy consumption varying from about 16,000Kwh to 18,000 Kwh per ton. Aluminum is conventionally produced by electrolysis using the Herault Process where calcined alumina is dissolved in molten cryolite at a temperature of 900 degree C. The process also requires an uninterrupted supply of power.

   Aluminum production is directly proportional to the current flowing through the electrolysis cells. The electrolytic cells have cathodes and anodes while the

electrolytic bath consists of aluminum fluoride and cryolite. The anode is made of calcined petroleum coke.

2. ***Alcoa Smelting Process*** consists of chlorinating of alumina or bauxite in the presence of carbon to produce aluminum chloride and then electrolysis of molten aluminum chloride with the recovery of chlorine. With this process power consumption can be reduced by 30 %.

3. The ***Toth Process*** *consists of exchange relation between aluminum chloride* and manganese. Bauxite mixed with carbon is chlorinated through fractional condensation and purification to form aluminum chloride. The aluminum chloride reacts with manganese to produce aluminum.

4. **Direct Reduction Process** *adopts the blast furnace route to reduce clay/bauxite* with coke and produce 70 % aluminum and 30 % silicon alloy-Alusil. The main advantage of the process is the substitution of expensive electricity by cheaper thermal energy.

5. **Carbo-Thermic Process** for the production of *aluminum may either use bauxite or* alumina. In the case of bauxite the material is reduced in an electrical arc furnace whereby fused alumina is produced and impurities are removed. The fused alumina is then reduced in another furnace in the presence of pure carbon where aluminum is produced. The process consumes lower energy as compared to the Hall and Herault Process.

6. ***Sub Halide Process*** developed by Alcan consists of making the aluminum alloy by smelting a mixture of bauxite and carbon in an electric arc furnace and then treating the alloy with aluminum chloride vapor at high temperature

Energy Consumption Scenario

On an average Indian smelters consumes 15,000 Kwh to 16,500 Kwh per ton of aluminum as against 14,000 to 14,500 Kwh per ton consumed by global smelters. Nalco is the most efficient producer in terms of power consumption. With a consumption of 15,840 Kwh per ton on the other hand, the power consumption of Hindalco is to the tune of 16,503 Kwh per ton of aluminum. The energy consumption scenario for major players in the industries is given in table A.18.2

Table - A.18.2: Electricity Consumed by Major Producers in Kwh/Ton

Electricity(Kwh/ton)	1996	1997	1998
Hindalco	16,503	16,203	16,197
Nalco	15,804	15,639	15.514
Indal	17,125	16,978	17,461
Balco	17,761	17,711	17,836

Cogeneration potential: The Indian Aluminium sector is already having captive power plants and the total installed capacity of steam based captive system is about 1408.5 MW and the net energy generation is about 9250 Gwh per annum. The sector as a whole purchase only about 330 Gwh per year and this constitutes about 4% of the total electricity consumed in the sector. On the other hand, the energy exported to the grid is about 1330 Gwh per year.

Conclusion: Since the captive power generation is already established in this sector, there is very little scope for the cogeneration potential. Therefore this sector is not considered in the evaluation of the total cogeneration potential in the Indian Industries (non sugar).

Fig: A.18.1

PRIMARY ALUMINUM PROCESS FLOW

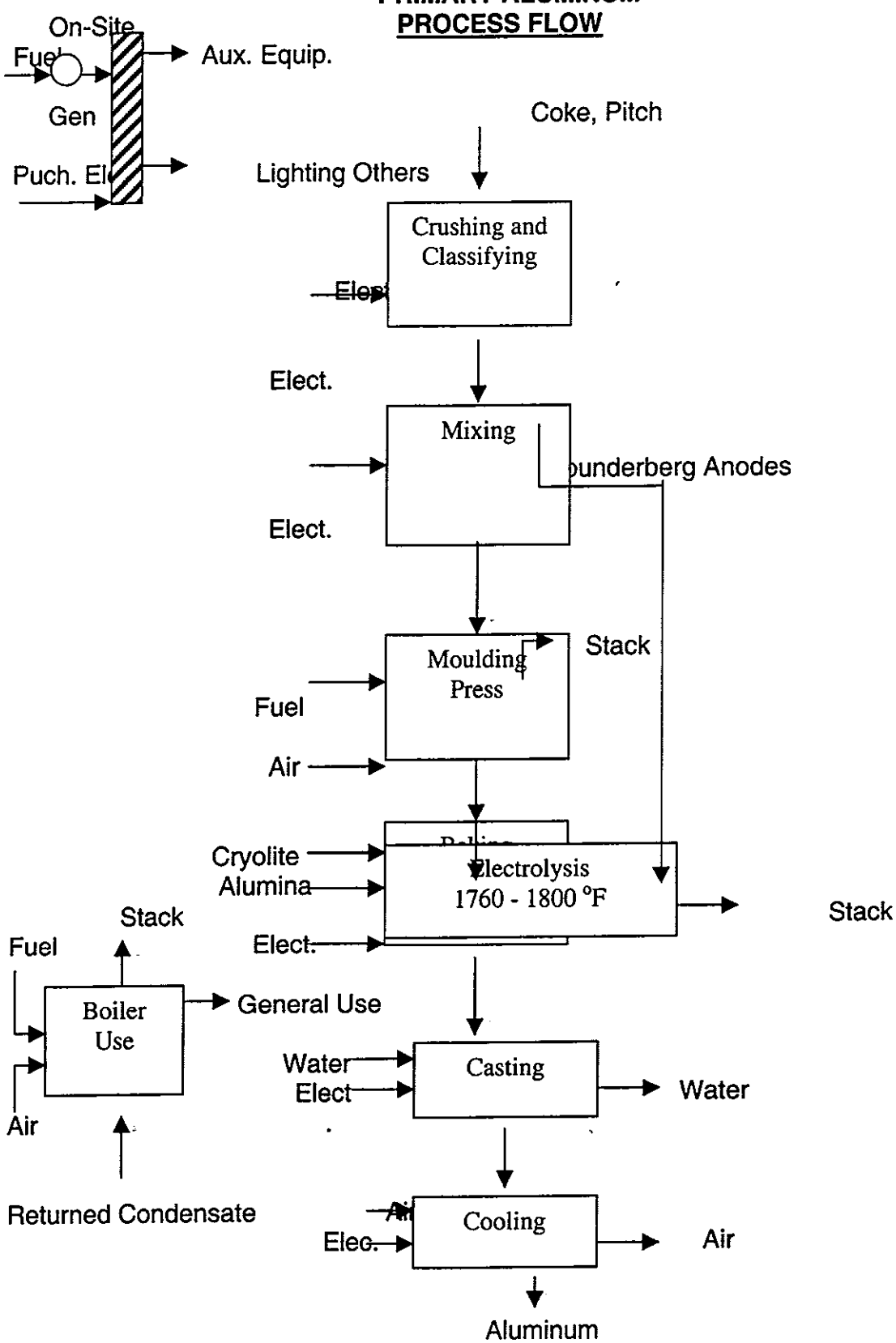

Fig : A.18.2 **SECONDARY NON-FERROUS METALS**
(Aluminum)
Process Flow

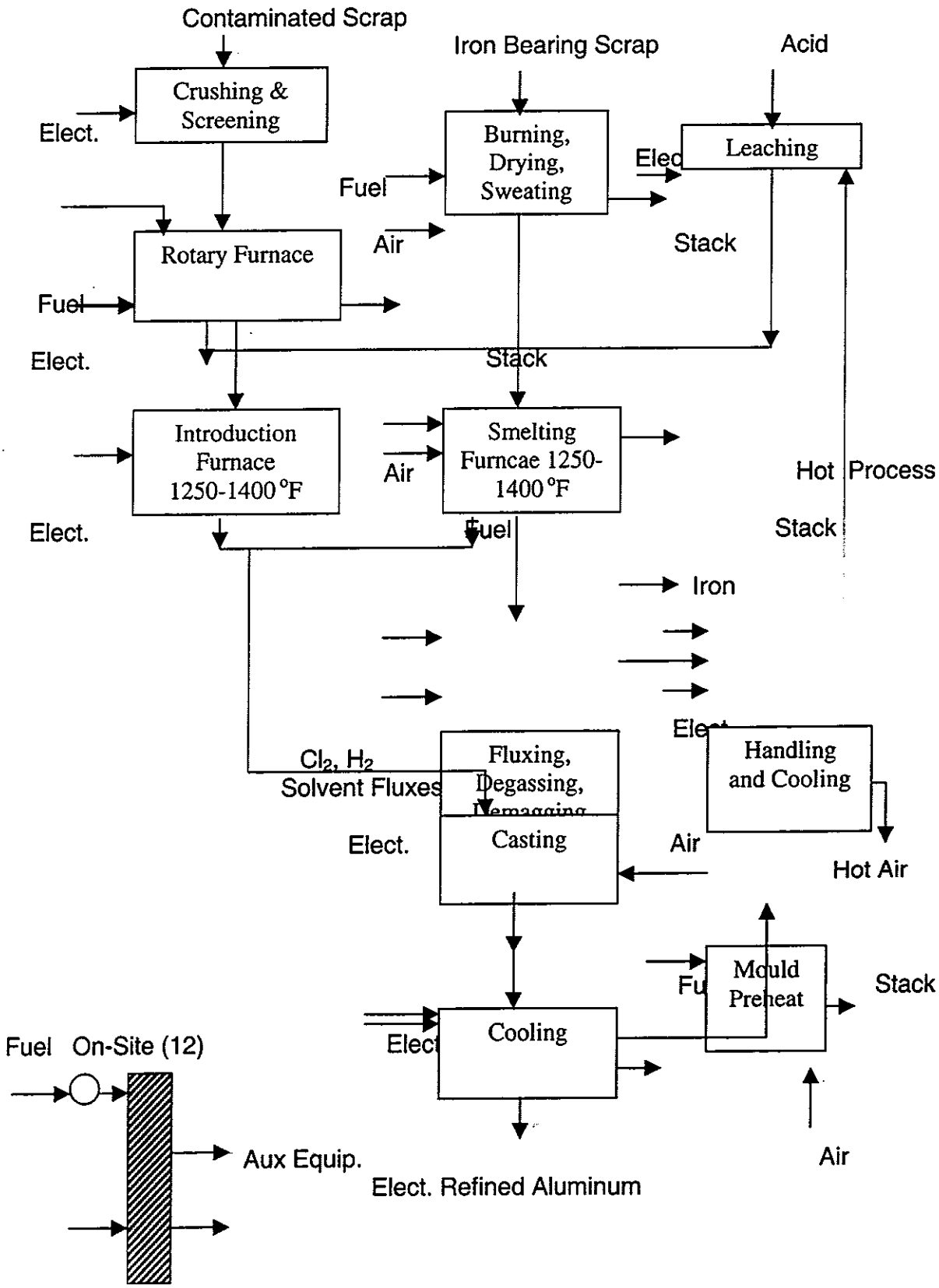

ANNEXURE-19

SECTOR: DYESTUFF INDUSTRIES

Introduction

The dye and dye intermediaries industry is an important segment of the chemical industry that provides inputs to a large number of industries. This industry which caters to both domestic and global demand is practically self sufficient in terms of inputs. Dyestuffs represent highest development in chemical technology and form a crucial link in the chain of chemical and allied industries.

History of Dyes

This industry started as an ancillary to the textile industry. The origin of the industry can be traced to forties when only a few natural dyes were manufactured indigenously by small scale units. Subsequently with the establishment of Atul products and Sandoz in 1947, large scale manufacturing of dyes commenced. Other medium and large scale units followed in quick succession. The fifties and sixties witnessed establishment of number of companies like Amar Dyechem, Colour Chem, Indian Dyestuff Industries, Sudarshan Chemicals and Chemiquip in the organized sector. Around this time, multinational companies like Hoechst, Bayer and ICI gained a foothold in the Indian market, through technical and financial collaboration with Indian companies. The mid-seventies and mid-eighties witnessed rapid growth in the dyestuff industry due to establishment of large number of small-scale units that were granted excise duty concessions. Today the country is almost self-sufficient in the dyestuff requirement with 95 percent of domestic demand met by local production.

Domestic Industry Structure

Production

The production capacity for dyestuffs in India stood at around 80000 tonnes in 1999-2000 (compared to the global capacity of 12.0-13.0mn tonnes). India accounts for around 5 percent of the global output. In terms of numbers there were initially more than one thousand units with 950 units in the small scale sector. Currently there are about 40-50 units in the organized sector and 500-600 in the unorganized after taking into account the closure of many units in this sector due to stricter pollution control laws. The organized sector accounts for around 55,000 tonnes of the total capacity. Thus organized sector contributes 65 percent while small scale sector (SSI) contributes 35 percent to overall dyestuff production in the country. In terms of location nearly 90 percent of the units are concentrated in Gujarat and Maharashtra.

Today the country is almost self-sufficient in dyestuffs requirement with nearly 95 percent of the domestic demand met by local production. In the last 52 years the industry has made considerable progress as importers of all dyes have turned exporters across all countries in the world.

Within India, the major players are:

Atul Products
Indian Dyestuff Industries
Jaysynth Dyechem
Sudarshan Chemicals
Colour Chem, and
Clariant India

The extent of concentration among the organized players in the industry has been increasing in recent times in favour of top players. For instance the combined turnover of top 20 companies, in the organized sector has grown from Rs.9.2bn in 1992-93 to Rs18.96bn in 1997-98. Whereas the market share of top 10 companies has increased from around 53.6 percent in 1992-93 to around 56.6 percent in 1997-98. The table A.19.1 gives below the company-wise trends in production for top 10 players in the country

Table A.19.1: Company wise trends in production

('000 Metric tonnes)

Companies	1992-93	1993-94	1994-95	1995-96	1996-97	1997-98
Atul Industries	5.9	6.3	6.5	9.8	9.2	8.4
Indian Dyestuff Industries	8.7	8.3	9.0	9.3	7.9	6.9
Jaysynth Dyestuff	N/A	6.7	7.1	6.7	8.4	9.5
Sudarshan Chemicals	6.8	7.2	8.3	8.2	8.1	9.5
Colour-Chem	3.9	4.5	5.2	5.0	4.9	6.1
Metrochem Industries	4.3	6.2	9.1	4.9	5.1	7.5
Ciba-Specialty Chemicals	N/A	N/A	N/A	N/A	0.6	0.4
Clariant (India)	0.6	0.7	0.7	0.7	0.7	1.0
Pidilite Industries	1.3	1.5	1.4	2.0	1.3	1.6

Source: Industry

Domination of Indian and smaller companies

Domestic companies dominate the Indian dyestuff market accounting for nearly 80% while the share of the multinationals has increased from 13-15 percent in 1992-93 to 18-20 percent in 1998-99.

In India, except for vat dyes, where there are just a few manufacturing companies because of the high investment needed, smaller companies contribute as much as 70 percent of production in the dyes business.

Similar trends are also visible in the global market. The concentration is still high in global market, with 8 to 10 companies controlling 60-70 percent of the total output. In the international arena, MNCs are rapidly consolidating their current market share. If

this trend continues, there will be ultimately two or three global players with a combined market share of over 60 percent.

Production and Consumption

The following table A.19.2 highlights production of dyes in the country in terms of organized and unorganized sectors.

Table A.19.2: Production of dyes in the organised and unorganised sector.

	Production			
Year	Organized	SSI sector	**Total production**	% share of organized players
1994-95	48000	30000	78000	61.5
1995-96	50000	25000	75000	66.7
1996-97	37430	37530	75000	50.9
1997-98	35470	NA	58530	60.6
1998-99	29690	NA	49230	60.3
1999-2000 (Est)	28500	NA	43850	65.0

Est: Estimated
Source: Chemical Industry digest May- June 99 data from 1994-95 till 96-97 and thereafter Annual report of Department of Chemicals and Petrochemicals for the years 1997-98 to 1999-2000.

Growth Rate

The dye stuff production has declined from around 58530 tons in 1994-95 to around 43850 tonnes in1999-00 mainly on account of the decline in the production in the organized sector which has declined by 19.7 percent to 28500 tonnes.

Currently, prices have been under pressure and unless there is a near match between capacity and demand this trend is bound to continue.
The following table A.19.3 lists out the production of different categories of dyestuff in the organized sector

Table A.19.3: Production of dyestuff in the organised sector:

Quantity ('000 Metric tonnes)

Categories of dyestuff	Installed capacity	Production			
		1996-97	1997-98 (P)	1998-99	1999-2000(Est)
Azo dyes	7.9	2.3	3.7	2.8	2.8
Acid direct dyes (non-azo)	1.0	0.9	0.3	0.3	0.1
Disperse dyes	3.4	3.8	4.3	3.3	2.5
Fast colour bases	1.2	0.3	0.2	0.05	0.04
Ingrain dyes	0.3	0.3	0.04	0.07	0.2
Optical whitening agents	1.4	1.0	0.9	0.4	0.5
Organic pigment colours	13.0	8.8	8.7	7.9	8.0
Pigment emulsion	6.3	4.0	3.9	3.5	3.0
Reactive dyes	7.5	4.4	6.4	5.2	5.0
Sulphur dyes	4.2	3.0	2.7	1.8	1.4
VAT dyes	2.5	2.3	2.3	2.5	2.4
Solubilised VAT dyes	0.3	0.08	0.07	0.03	0.04
Food colours	0.1	0.05	0.03	NA	NA
Napthols	1.9	0.8	0.8	0.2	0.6
Other dyes	7.0	5.3	7.3	1.3	1.5

P: Provisional
EST: Estimated
Source: Department of Chemicals and Petrochemicals, Annual Report

Cogeneration Potential

The dyestuff sector is one with varying type of products as indicated above and the production process is mainly a batch operation. Though, steam and power requirements are there in the production process, the production process does not allow the cogeneration in this sector. Due to the inherent technical problem, this sector is not considered for the technical cogeneration potential.

SECTOR: PETROCHEMICALS

Introduction

Domestic demand for petrochemicals has witnessed high growth rates. Demand for polymers (Polyethylene (PE), Polypropylene (PP) and Polyvinyl chloride (PVC)) and polyesters (Polyester filament yarn (PFY) and Polyester staple fibre(PSF)) grew by 21% and 26% respectively in FY98. The consumption of petrochemicals is given Table – A.20.1 which indicates the steady growth of the sector.

Table-A.20.1: Consumption of petrochemicals ('000 tons)

Financial Year	LDPE/LLDPE	HDPE	PP	PVC
1994-95	330	410	295	445
1995-96	370	450	330	500
1996-97	400	490	430	560
1997-98	460	490	590	630

On the basis of their peculiar features and end use, petrochemicals can be classified as polymers (plastics), synthetic fibre, synthetic rubber or industrial chemicals. Amongst these groups, polymers (HDPE, LLDPE, LDPE, PP) are the most important ones as they constitute 70% of petrochemicals consumed.

Industry Profile

Most of the plants set up till 1980 were alcohol based ethylene plants with small capacities. NOCIL was the first and only private company in the 60's, allowed to set up an integrated naphtha based petrochemical plant.

In 70's, state owned IPCL commissioned the first large scale fully integrated plant in Vadodra (Gujarat). Gradually, IPCL kept on expanding its capacities and upgrading its infrastructure. Till the early 90's, petrochemical industry was state controlled and dominated by state owned IPCL. The only other integrated player, that too in the private sector, was NOCIL with a very small capacity. Most of the other players had small, uneconomic size plants which were operated on molasses and alcohol.

With the liberalization process in the 90's, gates of the petrochemical sector were opened out to private enterprises for building up new capacities. In the private sector, Reliance Industries was quick enough to take advantage. It started expanding and building up existing and new capacities in a mega way.

In the post-liberalization era, Reliance Industries and IPCL have started building up world size fully integrated plants. Two more companies are entering the sector. One of the plants promoted by GAIL has recently initiated its operations. The other one Haldia

Petrochemical Complex (HPC) is being jointly promoted by three parties- West Bengal Govt., Tata Group, and Soros Chatterjee Group (USA).

Even the existing companies, Reliance Industries and IPCL, are under the process of implementing their expansion programs. Other small companies in the industry are Supreme Petrochemicals, Oswal Agro, Finolex, Bindal Agro, Bombay Dyeing, and Polychem.

Product Profile

The petrochemical products can be classified in five groups (Table – A.20.2), on the basis of peculiar features and end use. Polymers (Plastics), Synthetic Fibre, Synthetic Rubber, Synthetic Detergents and Industrial Chemicals are the five

Table-A.20.2: major products of petrochemicals.

GROUP	PETRO PRODUCTS	END PRODUCTS	USER SECTORS
POLYMERS (PLASTICS)	LDPE/ LLDPE/ PP/PVC/PS	PLASTICFILM /SHEET/ CALENDAR/ MOLDING PIPE	AGRICULTURE/PACKAGING/ AUTOMOBILE/DURABLES/ TELECOMMUNICATION
SYNTHETIC FIBRE	PSF/PFY/ ACN/AF	POLYESTER/ ACRYLC/NYLON YARN	TEXTILES
SYNTHETIC RUBBER	PBR/SBR	SYNTHETIC RUBBER	TRANSPORT / CONVEYOR BELT/ FOOTWEAR
SYNTHETIC DETERGENTS	LAB	DETERGENTS	HEALTH/HYGIENE
INDUSTRIAL CHEMICALS	EO/ BENZENE/ TOLUENE / PAN / MAN	SOLVENTS /GLYCOL'S	DYESTUFF/ PHARMACEUTICAL/ PAINTS/INDUSTRIAL USE

Manufacturing Process

Petrochemicals are derived from chemical compounds, mainly hydrocarbons obtained during the production of petroleum. The feedstocks (natural gas or naphtha) are chemically reacted in a cracker. The process of cracking (i.e. breaking larger molecules in smaller ones) produces base chemicals which are also known as 'Building Blocks'.

There are two types of plants producing base chemicals, olefin plants and aromatic reformers. Olefin cracker produces base chemicals ethylene, propylene and butadiene. Aromatic reformers produce benzene, toluene and xylenes.

For the olefin cracker, feedstock preferred is varying on the product mix required. Naphtha is generally used for a wider range of output products. If polyolefins output is to be maximized, natural gas is preferred as it yields a higher proportion of ethylene.

Aromatic reformers require feed stock which contain high aromatic contents. Therefore, naphtha, which is rich in aromatics compared to natural gas is preferred in aromatic reformers. Other factors taken into consideration while selecting the feedstocks are energy cost, availability, price, and grade of feed stock. Feedstock (naphtha and gas) prices have a positive correlation with prices of crude oil.

Amongst the olefins, ethylene is one of the most important building blocks. Most of the plant capacities are measured in terms of ethylene output. Ethylene is used to manufacture polymers, which constitute 70% of the demand of petrochemicals. Ethylene is the basic building block for PE, PVC and ethylene glycol's. Capacity of ethylene in India, by FY2000, is expected to be at 2.4mn tpa. (HPC is assumed to come on stream by FY2000).

Benzene and toluene are the basic aromatic chemicals. They are manufactured in three different ways. Both of them can be manufactured either in reformers, refineries or in steel plants. Benzene is widely used in caprolactum, lab, styrene, etc. Toluene is used in solvents and thinners, pesticides and drugs, chemicals and chlorinated derivatives and other sectors.

The base chemicals are further reacted in downstream units to get intermediates. Intermediates are then processed in processors and chemical units to get the end products.

Building Blocks

The basic petrochemical products or building blocks from a cracker complexe are olefins - ethylene, propylene and butadiene. Building blocks from reformers are aromatics - benzene, toluene and xylenes.

Ethylene is the most important building block since it is used to manufacture key polymers - PVC, LL/LLDPE, HDPE etc., which drive 70% of the petrochemicals demand. More than 60% of ethylene consumed in India is for PE and around 18% for PVC.

Ethylene output in general is taken as the capacity of the cracker. Most of the complexes try to maximize the output of ethylene. Capacities of other products are dependant on the capacity of ethylene.

Ethylene in India is produced in two alternate ways. Small capacity plants manufacture ethylene by the use of molasses or alcohol. Earlier, when prices of industrial alcohol were administered and it was available at low prices, it was economical to operate alcohol based plants. Later on, the large complexes set up were either naphtha based

or natural gas based plants. The installed capacities of Ethylene is provided in Table-A.20.3.

Table-A.20.3: Installed capacities of Ethylene in India:

Installed Capacities of Ethylene in India ('000 ton) Company	1997-98	1999-2000 (E)
IPCL	430	830
Reliance Industries	750	750
Nocil	75	75
GAIL		300
Haldia Petro Chemicals		420
Oswal Agro	23	23
Total	1,278	2,398

Benzene, a basic aromatic chemical is produced from three sources. In petrochemical plants from a reformer, a refinery product at most refineries and in steel plants, as a recovery product from coke oven gas obtained during the carbonization of coal.

Most of the reformers produce Benzene using naphtha as the feedstock, as the aromatic content is higher in naphtha as compared to natural gas.

Benzene is used in manufacturing caprolactum (more than 30%), Linear Alkyl Benzene (LAB -more than 20%), styrene (more than 25%), nitrobenzene and chlorobenzenes and pesticides.

Cogeneration Potential

Most of the petrochemical manufacturing plants are having the cogeneration plants and the major players in this field manufacture diverse products. It will be very difficult to segregate the petrochemicals alone and analyse the cogeneration potential. As of now most of the units are having the cogeneration potential and the option available is to identify the efficiency of such systems and analyse the possible technical cogeneration potential.

SECTOR: DAIRY

Introduction

India with 57million cows and 39million buffaloes, has the largest population of cattle in the world. Milk production gives employment to 70 million dairy farmers. In terms of total production, India ranks 2nd to USA with a production of 71million tons in 1997-98. Milk production is expected to cross 74million tons in 1998-99, making India the No1 milk producing nation in the world.

Production

Market size for milk (sold in loose/ packaged form) is estimated to be 33m tons valued at Rs429bn. The market is currently growing at around 4-5% pa in volume terms. It is one of the single largest segments amongst food products.

Milk production is largely concentrated in few states namely Uttar Pradesh, Gujarat, Punjab, Rajasthan and Haryana. Milk production grew by a mere 1% pa between 1947 and 1970. Since the early 70's, under *Operation Flood*, production growth increased significantly averaging over 5% pa.

About 75% of milk is consumed at the household level which is not a part of commercial dairy industry. Milk demand in four large metros is estimated to be 6million liters per day, about 40% of which is supplied by 10 public sector/ cooperative dairy plants. The bulk of the remainder is supplied by the traditional unorganised sector. Loose milk has a larger market in India as it is perceived to be fresh by most consumers

Operational Details / Manufacturing Process

The manufacturing process is represented in figure-A.21.1. Milk is pasteurized by treating it at high temperature for a short time. The main aim in treating milk with high temperature is to destroy the disease causing pathogens and to improve quality.

Separation machine is typically a high powered centrifuge. The centrifugal force makes milk fat globules and emerges as cream from the separator bowl. Separation of cream produces skim milk from which several dairy products are made.

Technical Potential for Cogeneration

In this sector, simultaneous use of steam and power is employed. However, the operation is not continuous which will result in the technical problems for the cogeneration systems. Due to the nature of operation of the industries in this sector, the cogeneration will be technically too difficult to be implemented.

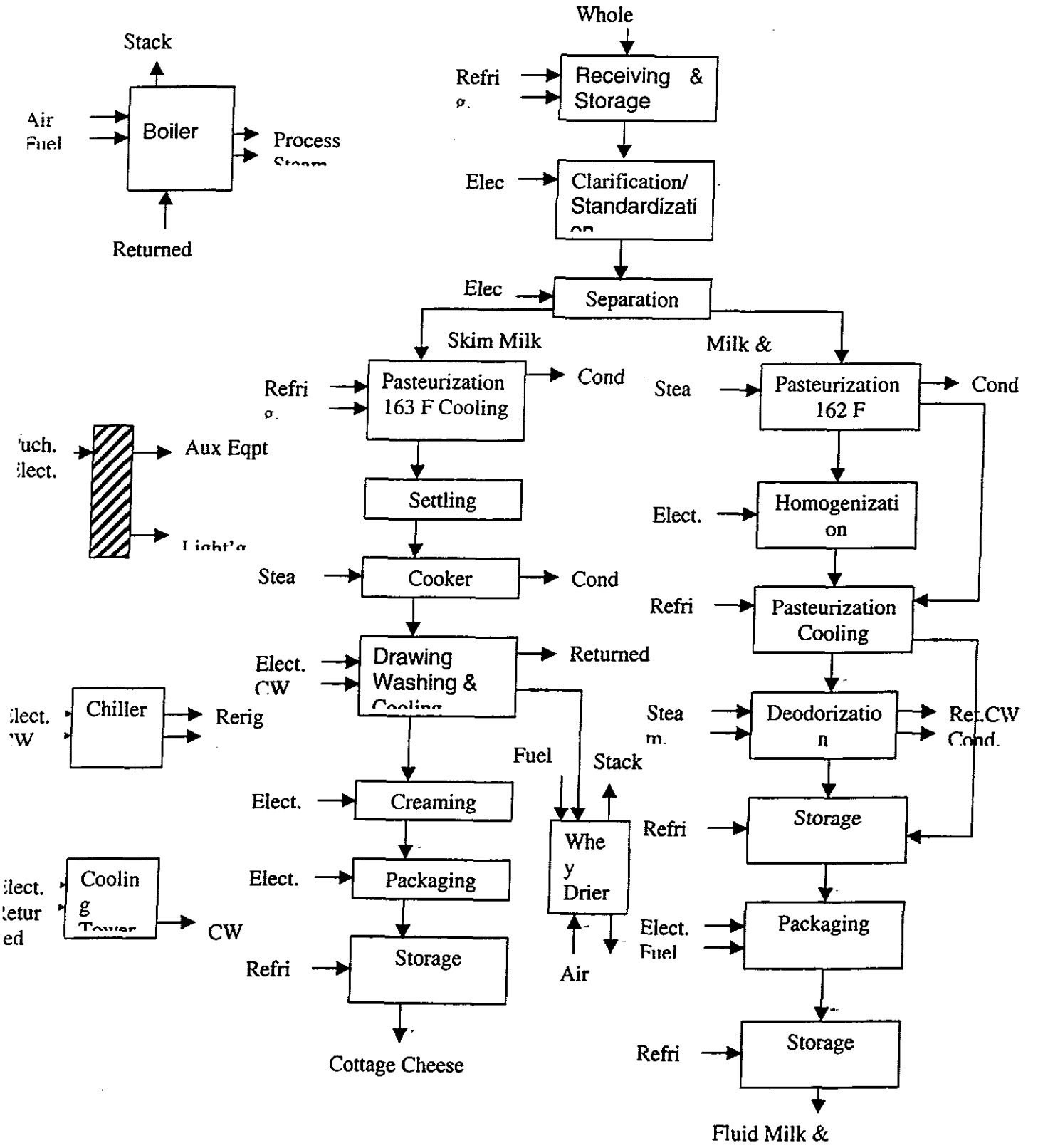

Fig : A21.1 Manufacturing Process Dairy Industry