PN-ACP-437
114449

U.S. Agency for International Development
Bureau for Global Programs, Field Support and Research
Center for Environment
Office of Energy, Environment and Technology and,
USAID/Mexico

in collaboration with Petróleos Mexicanos

Design, Installation, and Tests of a Cleaner Combustion Technology at a PEMEX Refinery

...a Public–Private Sector Partnership in Mexico

December 2001

Prepared by:

Prime Contractor: Nexant Inc
Subcontractor: Electric Power Technologies, Inc.
Contract Number: LAG-00-98-00006, Task Order 5

23865-105-0004

A

Contents

Section		Page
Summary		i
Background		1
REACH Technology Description		3
Project Objectives		4
REACH Equipment Design, Fabrication, & Field Service		4
Pre-REACH Baseline Emissions Tests		16
Installation & Startup of REACH-Modified Burners		21
REACH Emissions Tests		24
Madero MP-B4 Operating Recommendations		34
Technical Summary		40
Conclusion		42
Appendix A	IIE Pre-REACH Baseline Emissions Test Report	A1
Appendix B	IIE REACH Emissions Test Report	B1
Appendix C	EPT Boiler Data Sheets – Pre-REACH Baseline Emissions Tests	C1
Appendix D	EPT Boiler Data Sheets – REACH Emissions Tests	D1
Appendix E	Fuel Analyses	E1
Appendix F	Fuel Flow Versus Pressure – Gas-REACH	F1
Appendix G	Fuel Flow Versus Pressure – Oil-REACH Atomizers	G1
Appendix H	Oil Flow Control Valve Specification	H1

B

Summary

PEMEX, recognizing the need to assess the operational efficiencies of their refineries, and USAID, as part of its mandate to assist in mitigating greenhouse gas emissions, have joined forces with EPT to offer an economical solution to improving efficiency, reducing costs, and, perhaps more importantly, significantly reducing greenhouse gas emissions.

A USAID cost-sharing project to retrofit a steam and electric power generating boiler at PEMEX's Francisco I. Madero Refinery near Tampico, Mexico recently achieved significant reductions in unburned carbon particulate matter, nitrogen oxide, carbon monoxide, and greenhouse gas emissions. Through improved efficiency the costs of the innovative technology will be repaid in approximately one year. Even greater reductions in particulates and carbon monoxide are expected as additional heavy-oil fired boilers at PEMEX's other facilities are equipped with the innovative Reduced Emissions and Advanced Combustion Hardware (REACH) technology.

The increase in efficiency for just *one* boiler with the REACH technology is equal to an annual reduction of CO_2 emissions by approximately 4,700 tons, NO_x by 162 tons, and unburned carbon by 196 tons. Similar reductions can be achieved should all 40 power-generating boilers within PEMEX's operations be equipped with the technology. The estimated CO_2 savings, for example, would be approximately 200,000 tons per year. Stated differently, a mature forest covering the landmass of Cincinnati (50,000 acres) would be needed to gain a comparable reduction in CO_2. In addition, the second phase of testing with all equipment fully optimized is expected to substantiate even greater reductions in emissions.

USAID Leverages US Funds to Reduce Greenhouse Gases

USAID spearheads the U.S. Government's efforts to assist in developing strategies to tap private capital and talent to meet the growing environmental challenges of host countries. At the heart of USAID programs is the recognition that a sustainable economy requires a market-based approach. In pursuit of this strategy, USAID collaborates with the U.S. and host-country private sectors, international financial

institutions, and host-country agencies to leverage resources and encourage private sector participation through financing and partnerships.

To act on its mandate to mitigate greenhouse gas emissions in Mexico, USAID developed a collaborative partnership emphasizing the importance of private sector participation. USAID's Center for Environment, USAID/Mexico, Petroleos Mexicanos (PEMEX – Mexico's state-owned oil, gas, refining, and petrochemicals company), the Instituto de Investigaciones Electricas (IIE – Mexico's research institute for the state-owned electric utility), and Electric Power Technologies (EPT– a California technology firm), working together for over two years, initiated a project designed to accelerate the transfer of environmental control technologies by demonstrating them in real-world conditions.

Recognizing that economic development can not take place without being strongly integrated into the market place through the mechanism of profit, USAID sought partners in Mexico with the necessary resources and commitment to pollution reduction. PEMEX was undergoing a significant modernization program and was seeking technologies that could improve operations and reduce emissions. USAID and PEMEX worked closely together to uncover the most applicable technology. PEMEX and EPT covered about 70 percent of the $750,000 cost of the project; USAID provided the remaining 30 percent.

The U.S.-developed technology used for this cost-sharing approach to reducing harmful gases was selected because it can be retrofitted on all 40 boilers at PEMEX's six refinery sites. When operational on all 40 boilers, approximately 200,000 tons of CO_2 and 6,700 tons of unburned carbon per year will no longer spew into the atmosphere.

Not only will this technology benefit the environment, but also the estimated annual cost saving of $530,000 for one boiler will multiply to an annual savings in excess of $10,000,000 when it is implemented throughout the PEMEX system.

Environmental Concerns in Mexico

Air pollution is a serious problem in Mexico. PEMEX has taken a concerted effort to mitigate air emissions – unburned carbon particulate matter, nitrogen oxide, carbon monoxide, and greenhouse gases are examples.

Globally Mexico ranks 12th in the production of greenhouse gases and the rate of increase in these gases was 235% between 1990-1997. Mitigating stack emissions at all of PEMEX's operations will have a significant impact on the environment.

The twin goals of USAID's continuing efforts to protect the environment are to:

1. Reduce long-term threats to the global environment particularly the loss of biodiversity and by mitigating greenhouse gas emissions; and
2. Promote sustainable economic growth by addressing environmental constraints that impede development.

To meet these goals, objectives of USAID projects include promoting the implementation of energy efficient technologies, and introducing cleaner energy systems through the private sector and public/private partnerships.

PEMEX's 40 power-generating boilers located at refineries scattered throughout Mexico have a combined maximum steam generating capacity of about 7,000 t/h. These boilers are fired primarily with Mexican heavy fuel oil, supplemented by both natural gas and refinery gas. As part of its modernization program, PEMEX was looking for a technology to upgrade its outdated fuel burners. The existing burners produced high levels of unburned carbon and particulate matter. To improve carbon burnout, PEMEX treated the fuel oil with an additive that is about 10 percent effective in reducing unburned carbon but also reduces boiler efficiency. The annual cost for a single boiler for this additive is approximately $300,000.

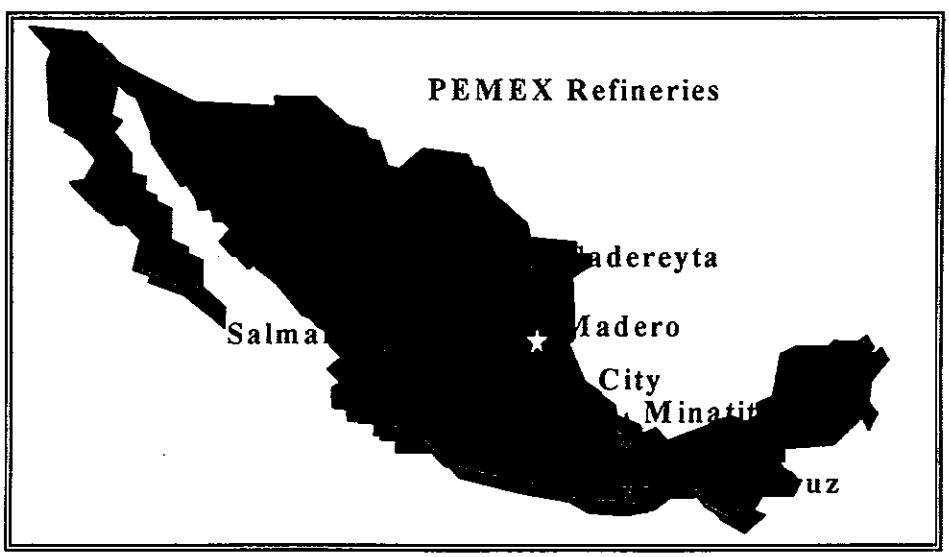

Although PEMEX had procured newer Verloop burners to replace its older burners, they had never been installed and had been stored for several years prior to this project. PEMEX requested that the initial demonstration use the Verloop burners because the results would be directly transferable to many of the boilers at Madero and other PEMEX refineries. If the demonstration proved successful for the initial test at Madero, USAID and PEMEX agreed that the technology would be applied at other PEMEX sites to reduce emissions.

Partnerships Benefit Private Sector Companies

The U.S.-based partner, EPT, is an innovative company that has significant experience in applying low cost, effective solutions to improve combustion efficiency. Combined with PEMEX's and IIE's technical and operational capabilities, USAID initiated a program to develop a strategy to reduce emissions and pollution. Following a screening study to determine the most appropriate applications, USAID and PEMEX selected a modified REACH technology for the demonstration. The REACH components were designed and manufactured by EPT. Installation was supervised by EPT. To fully equip all its burners with the new technology, it is anticipated that PEMEX will purchase significant engineering, construction, and related services from EPT and other U.S. companies.

In the first phase of the retrofit study, these EPT-developed burners produced a net decrease in carbon and greenhouse gas emissions due to improved combustion efficiency, as less oil was required to generate similar amounts of steam and electricity. PEMEX has more than 2,000 MW equivalent steam generation at its refineries that are primarily run on heavy fuel oil, improving plant efficiency though burner enhancement technology will greatly reduce greenhouse gas emissions and other polluting air emissions.

In addition to the other engineering improvements in the REACH oil burners, the technology included compatible Gas-REACH for burning natural and refinery gases that are periodically used in this type of facility. The patented gas fuel injector design works by creating a low No_x flame. The combustion equipment supplied by EPT consisted of new oil guns, oil gun coupling blocks, oil gun guide tubes, Gas-REACH injectors, Oil-REACH atomizers and swirlers, gas supply hoses, pressure gauges for oil and atomizing steam, upgraded flame detectors, larger oil flow control valve, and burner mounting plates. EPT

also supervised the pre-REACH baseline emissions tests, equipment installation, startup, combustion optimization tests, and post-REACH emissions acceptance tests. Equipment and services were supplied by EPT under a subcontract to Nexant Inc. of San Francisco, California. Emissions testing services and test equipment were furnished by Instituto de Investigaciones Eléctricas (IIE) of Cuernavaca, Mexico.

Results

Table 1.

REACH Emission Reductions (Phase 1)

Firing Configuration	Emission Reduction
100% Oil Firing	PM: 75% NO_X: 25-30%
Oil/Gas Cofiring (67% oil; 33% gas)	PM: 80% NO_X: 15-20%
100% Gas Firing	NO_X: 30-35%

Estimates of the contributions to increased boiler efficiency with REACH are about 1.8% included reduced atomizing steam consumption (0.647%), reduced excess air (0.070%), elimination of PEP-99 emulsion (0.809%), and reduced unburned carbon emissions (0.171%). The particulate emissions and excess air requirements for REACH are estimates based on tests conducted at Madero with new V-Jet atomizers (wider spray angle) that showed significant reductions in particulate emissions and excess air compared to the V-Jet atomizers supplied originally with a 80 degree spray angle.

Phase I tests were conducted from September 2000 to July 2001; Phase II tests with the equipment optimized for the best combination of particulate and NO_X emissions were conducted in September.

This collaborative program has yielded significant results. The combination of distant, collective resources, at times, represented different views. But, it was this collective difference that initially brought each of the participants together and ultimately provided the strength of our team. Overall, the combined contributions of the team provided timely,

effective resolution of issues that are inevitable in such an undertaking. Moreover, each participant provided significant cost sharing.

We are hopeful PEMEX and the private sector will build upon this success. The path appears to be straight. The technology, albeit in place for a relatively short time, has met and perhaps exceeded expectations. The economics support the switch to cleaner combustion technology. The end result can be significantly reduced emissions including unburned carbon and greenhouse gases.

The following sections of the report provide the technical details of this public-private partnership:

Background
REACH Technology Description
Project Objectives
REACH Equipment Design, Fabrication, & Field Service
Pre-REACH Baseline Emissions Tests
Installation & Startup of REACH-Modified Burners
REACH Emissions Tests
Madero MP-B4 Operating Recommendations
Technical Summary
Conclusion

Background

The United States Agency for International Development (USAID) worked in partnership with Petroleos Mexicanos (PEMEX -- Mexico's state-owned petroleum utility), the Instituto de Investigaciones Electricas (IIE), and Electric Power Technologies (EPT) to accelerate the transfer of environmental control technologies by demonstrating innovative combustion technology at PEMEX's Madero Refinery. To achieve both environmental beneficiation and greenhouse gas mitigation, USAID leveraged private and public sector funds, established a Mexican and U.S. government partnership and a public-private partnership, and introduced technologies that foster sustainable development. The total cost of this program is estimated at $750,000; USAID's portion was about 30%.

The goal of all the partners in this project was to develop a response to reducing greenhouse gas emissions that would be sustained by PEMEX and the private sector once USAID disengaged. Initially one of PEMEX's 40 power-generating boilers was equipped with advanced technology to reduce emissions. If the demonstration successfully met pre-established criteria, PEMEX agreed to retrofit its remaining 39 boilers, providing U.S. companies significant benefits for engineering, construction, and related services.

During 2000-1, USAID, PEMEX, and EPT conducted a jointly funded project to demonstrate the operational and environmental benefits of EPT's Reduced Emissions and Advanced Combustion Hardware (REACH) for a heavy fuel oil and gas fired power and steam generating boiler at PEMEX's Francisco I. Madero Refinery. This refinery is located near Tampico, Mexico on the Gulf of Mexico. Site specifics were assessed; REACH components were designed, manufactured, and installed at one boiler at the Madero refinery. Pre- and post-emissions tests were performed by IIE. The benefits of REACH include lower NO_X and PM emissions, higher boiler efficiency, longer life of burner components, and elimination of PEP-99 emulsion to obtain acceptable combustion. A second post-emissions test was performed to determine the specific benefits of an alternate REACH atomizer subsequently installed. The alternate REACH technology is expected to provide an even greater reduction in emissions.

The Madero refinery has six boilers with a combined maximum steam generating capacity of approximately 900 t/h. The boilers are fired primarily with Mexican heavy fuel oil. Supplemental fuels include natural gas and refinery gas. PEMEX is currently

undergoing a substantial modernization program and is seeking technologies that can improve operations and reduce emissions at all its refineries. In this regard, PEMEX had an interest in upgrading Verloop burners that are installed in the majority of the boilers at its six refineries. Verloop burners produce high levels of unburned carbon and, therefore, high particulate matter (PM) emissions. To improve carbon burnout, PEMEX treats the fuel oil with PEP-99, which is a 10 percent water emulsion that is effective in reducing unburned carbon. However, PEP-99 can have a detrimental effect on boiler efficiency, and the cost is substantial at approximately $0.53 (US) per barrel (159 liters). For a single 160 t/h steam boiler, the annual cost for PEP-99 is approximately $300,000 (US).

Boiler MP-B4 at the Madero refinery is a Cerrey VU-60 single-wall-fired boiler with a maximum steam generation rating of 160 t/h. The boiler has two burner elevations and three burners per elevation (six burners total). In normal operations, PEP-99 emulsion was added to the fuel oil to improve combustion and reduce unburned carbon. Although PEP-99 improved combustion performance, particulate matter (PM) emissions reported by the plant were still high, i.e., from 250 to 500 mg/Nm^{3,} depending upon the specific operating condition.

Normal operation of Boiler MP-B4 involves simultaneous firing of gas and oil (i.e., gas/oil cofiring). Typically, at high boiler load, two burners are operated on gas while the other burners are operated on oil, although the actual number of burners firing gas depends on gas availability from the refinery. The selection of burners for gas firing is at the discretion of boiler operators.

Boiler MP-B4 was initially equipped with Peabody gas and oil burners. However, PEMEX requested that REACH be retrofit to Verloop TTL/30 burners that had been procured previously to replace the Peabody burners, but were never installed and had been stored at the Madero Refinery for several years prior to this project. PEMEX requested this approach because the results would be directly transferable to boilers equipped with Verloop burners at Madero and other PEMEX refineries.

REACH Technology Description

The REACH technologies implemented at Boiler MP-B4 were low NO_X REACH (LN-REACH) for oil combustion, and Gas-REACH for burning natural and refinery gases.

LN-REACH for Oil Combustion

LN-REACH consists of Low NO_X oil atomizers and flame stabilizers. The REACH atomizers are internal-mix (I-mix) steam atomized and are designed to operate at constant steam-to-oil differential pressure over the load range. For purposes of reduced NO_X and particulate matter emissions, EPT supplied patented V-jet atomizers that operate at constant steam-to-oil differential pressure of approximately 1 kg/cm^2 (14 psid) and a steam-to-oil mass ratio at full load of approximately 10 percent. EPT also supplied a set of conventional I-mix atomizers in the event that PEMEX preferred lower PM emissions without a large reduction in NO_X emissions. New oil guns were also supplied.

The diffusers supplied with the existing Peabody burners for flame stabilization were bluff bodies with radial slots intended to minimize overheating and excessive coke formation on the bluff-body surface. The diffusers had several undesirable features that adversely impacted combustion performance. These included excessive pressure drop, deficiency of combustion air flow into the primary flame zone, absence of swirl in the combustion air, and overheating and subsequent shortened life of the stabilizers. EPT replaced the bluff body diffusers with compound-curve-blade swirlers equipped with a cone hub for additional cooling. The design of the EPT flame stabilizers (swirlers) was matched to the design of the atomizers (i.e., spray angle, flow rate, and number of exit holes) to achieve minimum NO_X and PM emissions. The stabilizers were constructed of 310 stainless steel and have an expected life of at least three years.

Gas-REACH Technology

Gas-REACH is a retrofittable low NO_X burner technology that consists of novel gas fuel injectors to control local air-fuel ratios and mixing (i.e., combustion staging) within the flame. The primary component of Gas-REACH is the patented fuel injector design, which injects the gas fuel into the base of the flame at the burner throat. Each burner contains four Gas-REACH fuel injectors, which produce a non-uniform injection of gas around the periphery of the REACH flame stabilizer. The resulting gas jets in combination with the aerodynamic flame patterns and air-fuel mixing produced by the flame stabilizer create an internally staged, low NO_X flame. Gas-REACH was designed

such that the same flame stabilizer used for oil combustion would be compatible with, and optimized for, low NO_X emissions when firing gas fuel.

Project Objectives

The project objectives were to retrofit Oil and Gas-REACH to the Verloop TTL/30 burners that had been purchased some years ago by PEMEX for installation at Boiler MP-B4 of the Madero refinery. The REACH-modified burners were then installed in place of the existing Peabody burners. The REACH technology was designed for oil and gas firing to increase boiler efficiency and achieve the objectives below.

Oil Firing	Gas Firing
1. PM emissions <150 mg/Nm^3 for all loads up to 160 t/h without PEP-99 emulsion. 2. NO_X emissions reduced 40% compared to pre-REACH baseline emissions at the same PM emissions level.	1. NO_X emissions reduced 25% compared to pre-REACH baseline emissions 2. CO emissions <150 ppmv

REACH Equipment Design, Fabrication, & Field Service

Retrofit of REACH was complex because the design of Verloop burners is quite unlike conventional oil/gas burners installed in wall-fired boilers, and the burners were oversized for installation in the Madero MP-B4 windbox. The most unusual characteristic of Verloop burners is the use of large quantities of low pressure air for oil atomization. The primary component of the burner is a cylinder assembly ("bullet") consisting of coaxial pipes that supply (1) atomizing air to the oil atomizer assembly, and (2) natural gas or refinery gas to the gas injectors. There is a small multiblade flame stabilizer attached to the end of the bullet assembly. The burners are also equipped with a sliding sleeve air register.

The combustion equipment supplied by EPT consisted of new oil guns, oil gun coupling blocks, oil gun guide tubes, Gas-REACH injectors, Oil-REACH atomizers and swirlers, gas hoses, pressure gauges for oil and atomizing steam, upgraded flame detectors, larger oil flow control valve, and burner mounting plates. EPT also supervised the pre-REACH baseline emissions tests, equipment installation, startup, combustion

optimization tests, and post-REACH emissions acceptance tests. The equipment and services were supplied by EPT of Menlo Park, California under a subcontract to Nexant Inc. of San Francisco, California. Emissions testing services and test equipment were furnished by Instituto de Investigaciones Eléctricas (IIE) of Cuernavaca, Mexico. The REACH retrofit included the major activities described below.

Engineering

A sketch of the existing Peabody burners is shown in **Figure 1**. The burner was equipped with conical air registers with swirl vanes, a diffuser for flame stabilization, and a gas ring. Internal-mix steam atomizers were used with a parallel-tube oil gun. The depth of the windbox from the water wall tubes to the windbox wall was 42 inches (1,067 mm), which was considerably shorter than required for installation of the Verloop TTL/30 burners.

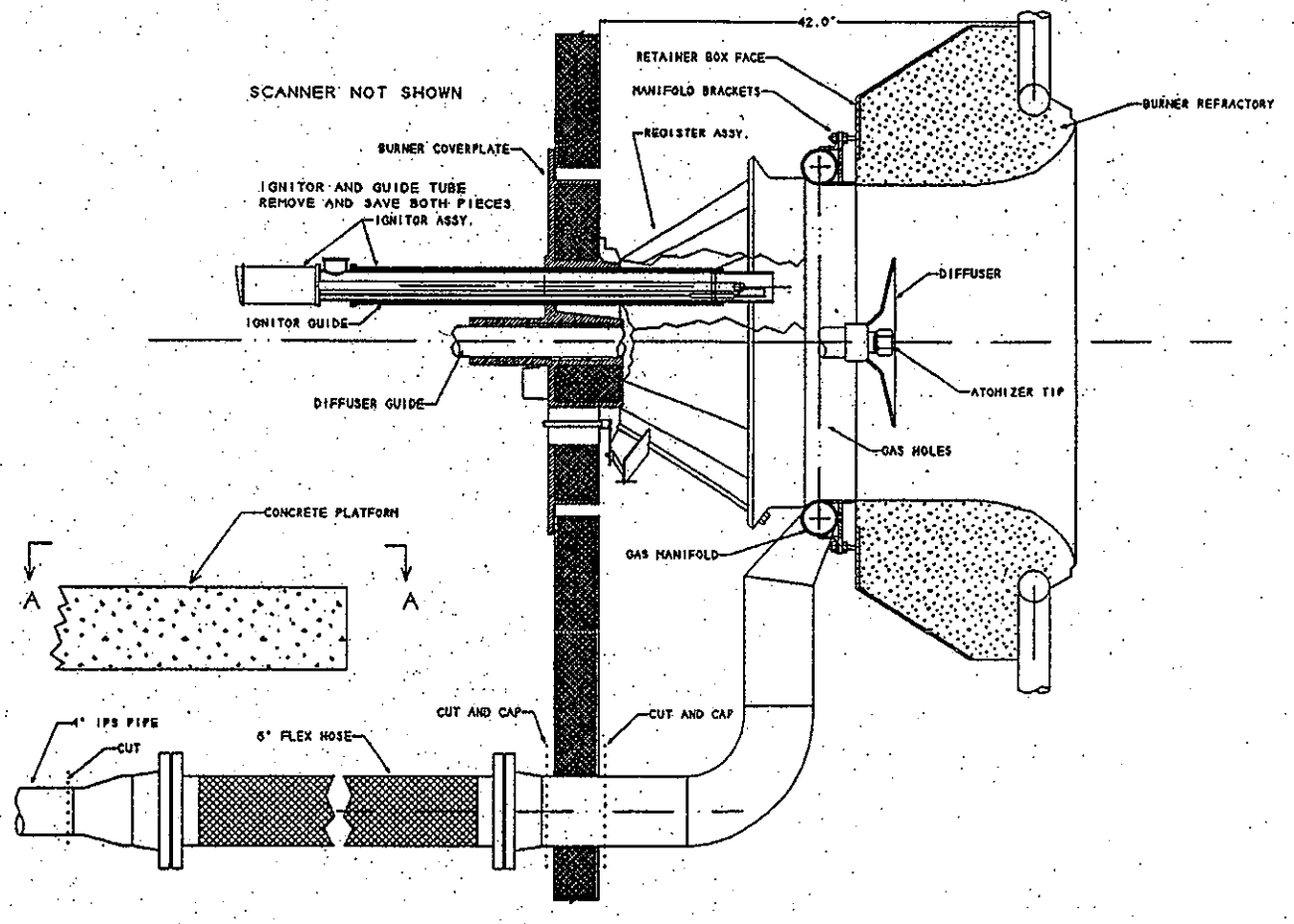

Figure 1. Sketch of original Peabody burner at Madero MP-B4.

Figure 2 is a sketch of the Verloop TTL/30 burners supplied for Madero MP-B4. The diameter of the bullet assembly was 12.75 inches (outside diameter), and the length was 96 inches (2,438 mm). The Verloop burners were designed to be installed in a windbox with a depth of 7.5-feet (2,286 mm). The depth of the windbox at Boiler MP-B4 was only 42 inches (1,067 mm). Therefore, it was necessary to shorten the "bullet" assemblies by approximately 53 inches (1,346 mm) before retrofitting the REACH components. **Figure 3** shows where the cut was made in the bullet assembly. It was also necessary to reduce the length of the air registers by 7.5 inches (190.5 mm). Installation of the modified burners was also challenging because of the very confined space in the windbox, i.e., the REACH-modified Verloop burners barely fit in the 42-inch (1,067 mm) spacing between the windbox and furnace walls. **Figure 4** is a sketch of the final modified burner equipped with Oil and Gas-REACH installed in the windbox at Madero MP-B4. **Figure 5a** presents photographs of the original Peabody burner and **Figure 5b** shows the REACH-modified Verloop burner as viewed from the furnace.

EPT coordinated all engineering with PEMEX for equipment that required relocation (e.g. steam, oil, gas piping, shutoff valves, etc.) for proper "fit up" and interface with the modified Verloop burners. The existing Burner Management System was unchanged. Engineering performed by EPT is summarized below.

1. Review of the natural gas supply, oil supply, and steam atomization systems (including P&I drawings) to determine design criteria for the Oil-REACH and Gas-REACH hardware.
2. Inspection of Boiler MP-B4 to measure all relevant dimensions for the retrofit.
3. Detailed inspection of the Verloop burners procured by PEMEX for Boiler MP-B4.
4. Design modifications for the Verloop burner assemblies (and air registers) including procedures to shorten the burners to fit inside the windbox and cleaning of the burners to remove corrosion from being stored outside for several years. The length of the Verloop assembly was shortened by 53 inches (1,346 mm) to fit inside the windbox. Similarly, the length of the air register was reduced from 19.5 inches (495 mm) to 12 inches (305 mm) to fit inside the windbox. This modification permitted the REACH-modified Verloop burners to be installed without moving the windbox wall. Also, design of new oil gun guide pipes, oil gun coupling blocks, gas injectors, burner cover plate, and burner supports for the Verloop burners.

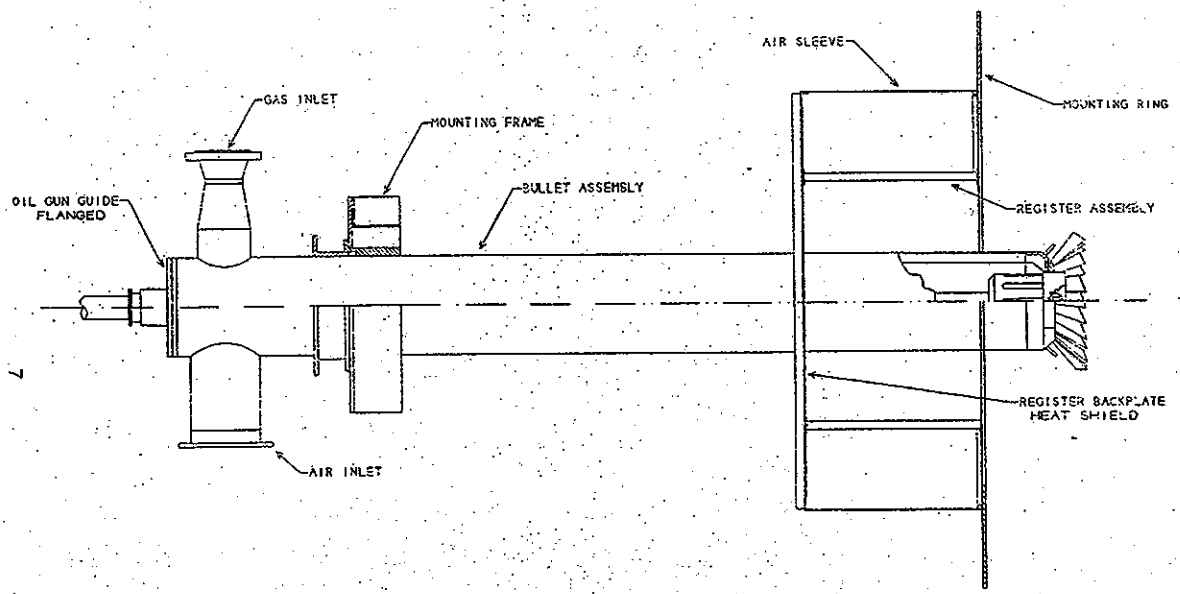

Figure 2. Sketch of the Verloop TTL/30 burner supplied for Madero MP-B4.

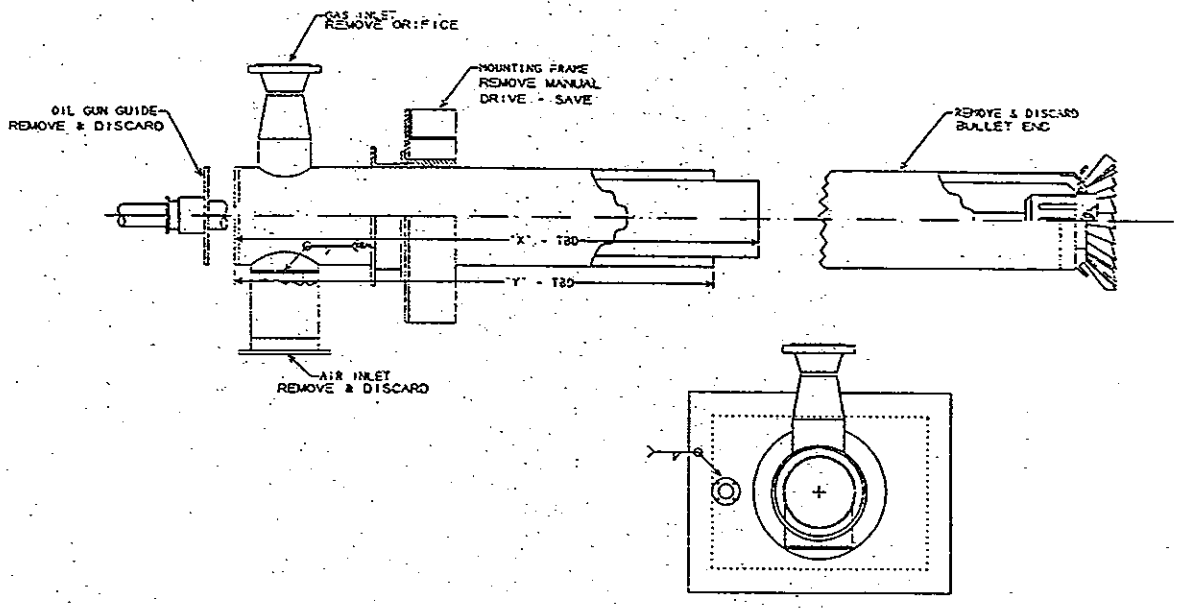

Figure 3. Sketch of the Verloop TTL/30 burner showing "cut" of the bullet assembly.

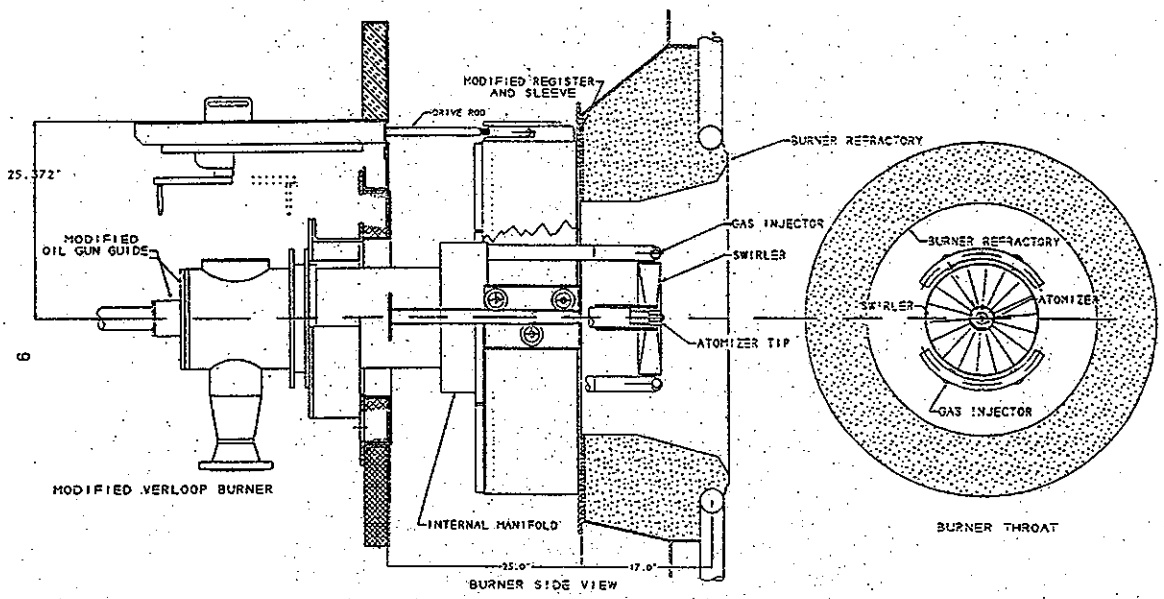

Figure 4. Sketch of the REACH-modified burner installed at Madero MP-B4.

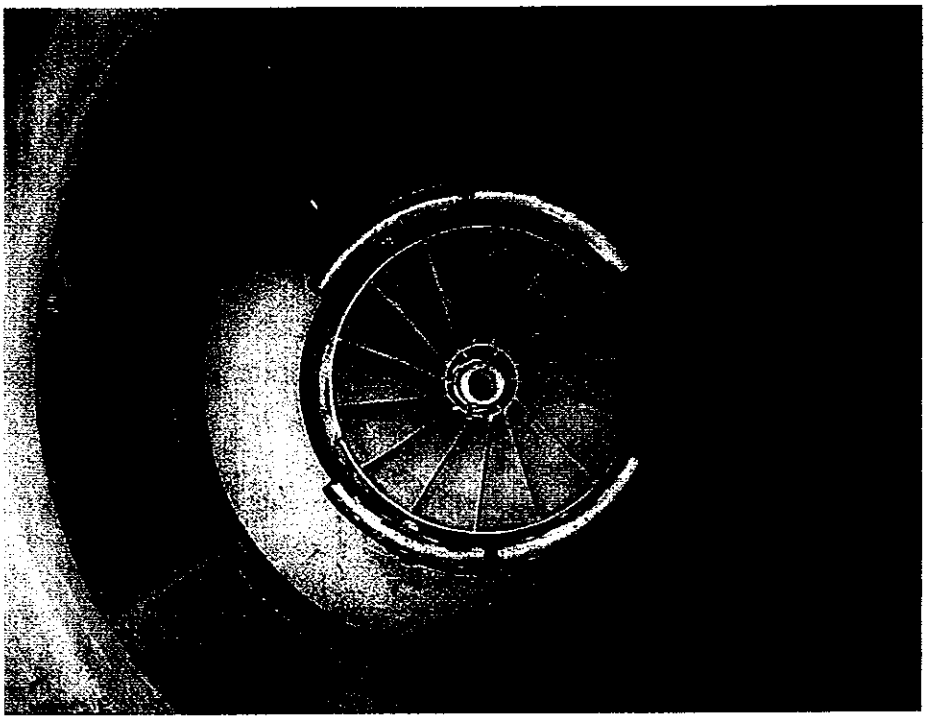

Figure 5b. Photograph of the REACH-modified burner

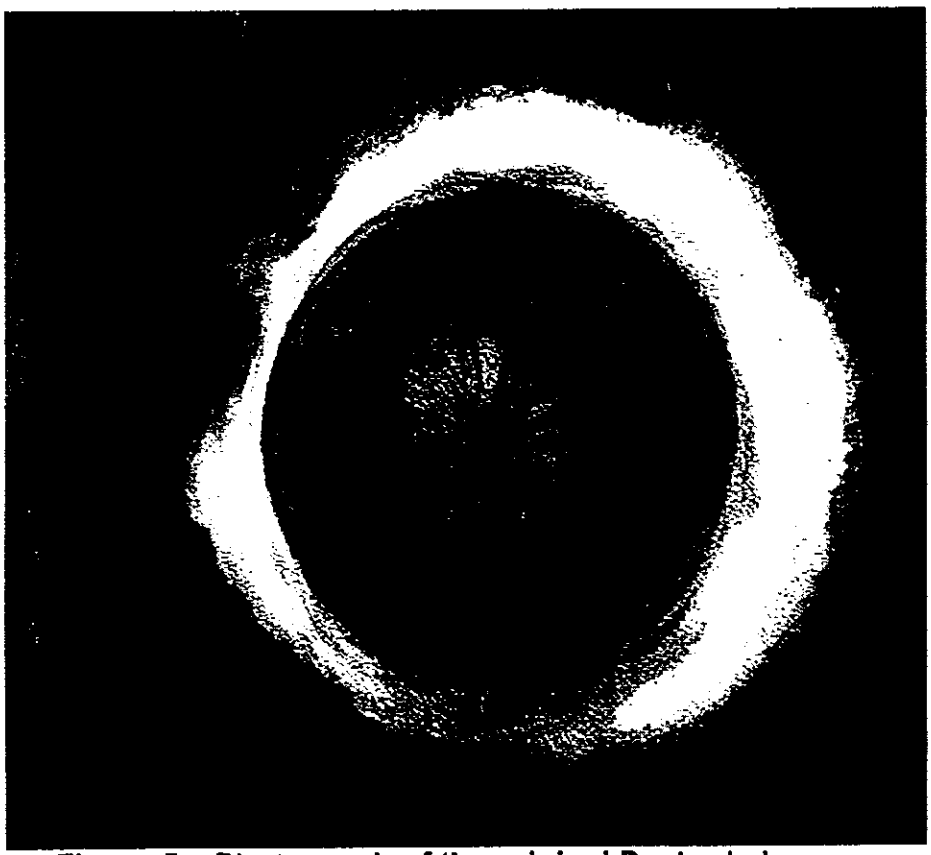

Figure 5a. Photograph of the original Peabody burner

5. Review of detailed engineering by PEMEX to relocate burner equipment on the burner front as needed to accommodate the modified Verloop burners.

6. Design new concentric-tube (i.e., coaxial) oil guns specifically for the REACH V-jet atomizers. To eliminate the potential of oil leakage from the gun and atomizer assemblies, the new EPT oil guns and V-jet atomizers were designed to operate with the atomizing steam in the outer annulus of the oil gun and oil in the inner tube.

7. Design new oil gun coupling blocks.

8. Design for converting the oil gun guide seal system from atomizing steam to compressed air.

9. Design of a new, internal mix, steam atomized LN-REACH atomizer assembly (i.e., V-jet atomizer). A prototype of the design was tested in the flow laboratory using water and air as the working fluids to characterize the spray pattern, flow-pressure relationship, and spray quality as measured by the Sauter Mean Diameter. Conventional I-mix atomizers were also designed.

10. Design of new compound-curved-vane swirlers with a cone hub for improved flame stabilization and combustion. As part of the design, an aerodynamic analysis of the burner was conducted to determine the swirled-to-total air flow (i.e., air flow through the swirler compared to the total air flow), and the swirl number (i.e., amount of swirl imparted to the combustion air) of the stabilizer. EPT also provided dimensioned engineering drawings of the new burner throat contour to PEMEX engineers.

11. Design of Gas-REACH injectors and a gas distributor for attachment to the Verloop burner assembly. EPT prepared design specifications, performed design engineering, and prepared fabrication drawings for the Gas-REACH retrofit hardware.

12. Design of modifications for the Verloop sliding sleeve air registers (dampers) to eliminate "binding" caused by off-center actuation by the burner manual drives. In the closed position, stops were installed to allow for sufficient air to flow through the burner air register for cooling.

13. Design of a new burner cover plate for attachment to the windbox wall in the same location as the existing Peabody cover plate.

14. Preparation of the following drawings and printed instructions:

- Field modification of the Verloop burner assemblies to cut and shorten the burner and install new oil gun guide tubes, Gas-REACH injectors, Oil-REACH swirlers, and gas distributor welded to the Verloop burner.
- Modification of the burner throat contour and installation of new burner supports.
- Installation drawings with instructions for the sliding air dampers.
- Demolition drawings with instructions.
- Fabrication drawing of a new burner cover plate.

15. Project management and coordination of activities, including preparation of a project schedule, communications between EPT, USAID, and PEMEX personnel, subcontractor management, and participation in project-related meetings.

Materials

EPT fabricated and performed quality control tests on the following materials. All materials were designed to be assembled in the field or at shops in Mexico.

1. Six new oil gun guide pipes for the Verloop burner assemblies. Each guide pipe was fabricated of carbon steel with a 304 SS section at the swirler end. The guide pipe was equipped with an air seal aspiration injector, not steam as used on the existing oil guns.
2. Six oil gun coupling blocks.
3. Twenty-four Gas-REACH gas injectors, four per burner. The gas injectors were equipped with an internal manifold and mounting hardware that was welded to the shortened Verloop burner assembly.
4. Eight concentric-tube (coaxial) oil guns (includes two spares).
5. Twenty-four LN-REACH, V-jet atomizer assemblies (included one set of spares) with 80 degree spray angle. Twelve of the atomizer assemblies were suitable for full load operation with PEP-99 emulsion (which required 10 percent higher flow rate), and twelve were suitable for full load operation without PEP-99 emulsion. For test purposes, six V-jet atomizer spray plates with 90 degree spray angle, and six V-jet atomizer assemblies with 100 degree spray angle were supplied. Also, for test purposes, six I-mix atomizer spray plates with 90 degree spray angle and six

spray plates with 100 degree spray angle were supplied. Each atomizer assembly consisted of a spray plate, distributor plug, and retaining nut. The material of construction for the spray plate and back plate was H13 tool steel hardened to Rockwell 53-56, whereas the retaining nuts were fabricated from 440C stainless steel.

6. Eight REACH compound-curved-vane swirlers with a cone-hub design (included two spares). The swirlers were constructed from 310 stainless steel.
7. Six primary air blank flanges. The one-fourth-inch thick carbon steel flanges covered the existing primary air duct on the Verloop burners.
8. Six burner cover plates fabricated of carbon steel.
9. Six 6-inch gas hoses for connection of the REACH-modified Verloop burners to the gas supply header for each burner.
10. Six Durag D-LE 601 UA 45 flame detector heads to replace the original flame detector heads that were not designed for gas/oil operation.
11. Ten pressure gauges for atomizing steam and fuel oil at the burners.
12. Fisher Controls pneumatic oil flow control valve to replace the existing valve (which had excessive pressure drop).

Field Services

EPT performed the following field services to assure proper installation, commissioning, and operation of the new LN-REACH and Gas-REACH combustion hardware at the Francisco I. Madero Refinery of PEMEX.

1. Support for demolition of the existing burner and installation of the LN-REACH and Gas-REACH hardware. EPT performed an internal windbox and furnace inspection immediately after the unit was removed from service to insure that the REACH-modified burners fit with minimal field modifications. For required modifications, EPT worked with the PEMEX installation contractor for the necessary changes.
2. Internal boiler inspection and mechanical checkout of the new hardware prior to returning Boiler MP-B4 to service. Following the boiler inspection, EPT met with the PEMEX engineers to discuss changes and adjustments to the equipment required.
3. In cooperation with PEMEX personnel, EPT supported boiler startup with the new LN-REACH and Gas-REACH hardware.

4. Following boiler startup, EPT conducted combustion optimization tests on oil and gas. For oil, it was necessary to evaluate a number of different atomizer spray angles to determine the best atomizer spray plate for minimal PM emissions. Tests when firing oil were conducted without PEP-99 emulsion.
5. Using the optimum burner settings and atomizer spray angle to minimize PM and NO_X emissions, acceptance tests were conducted to demonstrate attainment of the PM and NO_X emissions guarantees.
6. Training of operating and maintenance personnel in operating Boiler MP-B4 with the new Oil- and Gas-REACH combustion equipment. EPT furnished detailed operating and maintenance instructions and a spare parts list.

Work by PEMEX

PEMEX, or others performed the following work items on behalf of PEMEX, as part of the project.

1. Supply of technical information, drawings, test data, and operating data relevant to the design and performance of the existing combustion equipment.
2. Labor and equipment for removal of the combustion equipment to be replaced.
3. Labor, equipment, tools, and supplies to relocate flame scanners and flame scanner sight pipes, and ignitors and ignitor guide pipes per instructions provided by EPT.
4. Labor, equipment, tools, and supplies required to transport the existing Verloop burners to a location where they could be readily loaded onto a flatbed truck for shipping to a machine shop in Mexico.
5. Installation of the REACH-modified Verloop burners in Boiler MP-B4. EPT supervised the installation.
6. Standard piping materials common to refinery operations for modification of the atomizing steam piping system (i.e., standard pipe).
7. Labor and materials for physical modification or repair of the boiler equipment and controls.
8. Labor and materials to modify the burner throat contour per EPT instructions.

9. Contract with the IIE to conduct pre-REACH baseline emissions tests on gas and oil with and without PEP-99 emulsion, and post-REACH emissions tests on gas and oil without PEP-99 emulsion.
10. Labor and test equipment for sampling and analysis of fuel oil burned during combustion tests conducted by IIE.
11. Adjustment of the set point of the fuel oil heaters to achieve a fuel oil viscosity at the burners between 20 and 30 centistokes (15-20 SSF).

Pre-REACH Baseline Emissions Tests

Before installing the REACH equipment, baseline emissions tests were performed from September 21-25, 2000 to establish reference data for emissions of particulate matter mass (PM), nitrogen oxides (NO_X) and carbon monoxide (CO). The emissions measurements were performed by the IIE under contract to PEMEX. EPT provided on-site supervision and documentation of boiler operating conditions. Tests were performed for three modes of boiler operation: (1) 100% oil firing, (2) combination gas and oil firing (oil/gas cofiring) and (3) 100% gas firing.

During the tests, the fuel oil was not treated with the normal emulsification/additive (PEP-99) used by the plant for particulate emissions reduction and stack opacity control. This enabled a comparison with REACH technology, which was designed to operate without PEP-99.

The matrix of baseline test conditions is contained in Table 1. The IIE test report and EPT boiler data sheets are provided in Appendices A and C, respectively.

Emissions Measurement Protocol

Gaseous Samples. Flue gas samples for measurment of NO_X, CO, and O_2 were extracted from probes positioned in the stack and in each of the two flue gas ducts upstream of the boiler air heater. The probes in the ducts were postioned to provide samples that were representative of the duct average, based on manual gas traverses performed in each duct. The O_2 measured in the ducts was indicative of the excess O_2 for combustion, since it was not affected by normal air inleakage across the air heater. Accordingly, the duct excess O_2 was used as a correlating parameter for NO_X and PM emissions test results.

Table 1
Pre-REACH Emissions Test Matrix

Test No.	Steam Flow, t/h	Excess O_2, %	Test Measurements by IIE/PEMEX			
			NO_X	O_2	CO	PM
Oil Fuel – No PEP-99						
1	Max (160)	Normal	✓	✓	✓	✓
2	"	Low	✓	✓	✓	✓
3	140	Normal	✓	✓	✓	--------
4	"	Low	✓	✓	✓	--------
Normal Oil And Gas Fuel Operation– No PEP-99						
5	Max (160)	Normal	✓	✓	✓	--------
6	"	High	✓	✓	✓	✓
7	140	Low	✓	✓	✓	--------
8	"	Normal	✓	✓	✓	--------
100% Gas Firing (6 Burners)						
9	Max (160)	Normal	✓	✓	✓	--------
10	"	High	✓	✓	✓	--------

The stack measurments were used for reporting official NO_X and CO emissions for each test conditon, since the stack samples represented an average, well-mixed composite of the boiler emissions. For reporting purposes the stack emissions were normalized to Mexico standard 5% O_2 dillution, which eliminated any impact of air heater air inleakage. The NO_X and CO measurments in the ducts were in good agreement with the stack measurments, when differences in O_2 concentrations were taken into account.

Table 2 presents the methods and equipment used by IIE to measure emissions.

Table 2
Emissions Test Methods and Equipment

EMISSION	METHODOLOGY	EQUIPMENT
Oxygen (O_2)	Electrochemical cells	Lancom 6500
Carbon Monoxide (CO)	Electrochemical cells	
Nitrogen Oxides (NO_X)	Chemiluminiscence	Fisher-Rosemount
Particulate Matter Mass (PM)	Isokinetic sample (Method 5, EPA)	Andersen Universal Stack Sampler
Gas Velocity	Method 1, EPA	
Moisture	Method 4, EPA	

PM Mass Emissions. PM emissions were measured using US Environmental Protection Agency (EPA) Reference Method 5 (out-of-stack heated filter). PM samples were obtained in a traverse at a sample port at the base of the stack. The PM samples were weighed on site using a microbalance provided by PEMEX.

PM emissions were reported by IIE in units of milligrams per normal cubic meter (mg/Nm^3), normalized to 5% excess O_2 per the Mexico standard.

Pre-REACH Test Results – Oil Firing

The tests with 100% oil firing were conducted with all burners in service at a maximum boiler load of 160 t/h steam flow and at a reduced load of 140 t/h. At each load condition, two boiler excess oxygen levels were tested: (1) normal excess O_2 as specified by the boiler operators, and (2) reduced excess O_2 approximately 1.0% below the normal excess O_2 level. PM emissions were measured only at 160 t/h, while gaseous emissions were measured at both loads.

PM Emissions. The PM emissions measured at 160 t/h were 821 mg/Nm^3 and 948 mg/Nm^3 at the normal and reduced excess O_2 operating conditions, respectively. These values were considerably above the 150 mg/Nm^3 target values for REACH, and they were indicative of poor combustion conditions and high unburned carbon levels.

At maximum load, a stack smoke plume was readily visible, consistent with high carbon and PM emissions. At the reduced load condition, the plume visibility was significantly

reduced, suggesting that the PM emissions (not measured) would be less than at full load. At both loads a whitish-colored component of the plume was also visible; this component is the result of sulfuric acid condensation, which is common on boilers burning heavy fuel oil with high sulfur content.

Gaseous Emissions. Table 3 summarizes NO_X and CO emissions for 100% firing.

Table 3
Baseline Gaseous Emissions – Oil Firing

Load, t/h	Excess O_2, %*	NO_X, ppm (dry at 5% O_2)	CO, ppm (dry at 5% O_2)
160	2.29 (low)	202	1
160	2.91 (normal)	222	0
140	2.16 (low)	197	3
140	3.20 (normal)	234	0

* Excess O_2 measured at air heater inlet.

The NO_X emissions were comparable at the two test loads when compared at similar excess O_2 levels, indicating that NO_X was not sensitive to changes in boiler load in the 160 t/h to 140 t/h load range. The low CO emissions and high PM emissions suggested that poor oil atomization was a primary cause of the PM emissions.

Pre-REACH Test Results – Oil/Gas Cofiring

Normal operation of boiler MP-B4 involved gas/oil cofiring. Typically, at high boiler load conditions two burners were operated on gas, while the other burners were operated on oil, although the actual number of burners firing gas depended on gas availability from the refinery. The selection of burners for gas firing was at the discretion of boiler operators.

For the pre-REACH emissions tests, burners No. 1 and No. 2 (lower-left and lower-center burners) were operated on gas, while the other four burners were fired with oil. The proportion of heat input to the boiler was approximately one-third from gas and 2/3 from oil.

PM Emissions. PM emissions were measured at a single operating point at 160 t/h. PM emissions were 799 mg/Nm^3 at a normal excess oxygen condition. These

emissions were 15% below the levels measured with 100% oil firing at comparable load and excess oxygen.

During the PM test, a dark-colored smoke plume was readily visible at the stack, which is consistent with high carbon and PM emissions. After raising the excess O_2 by 0.7%, a continuous dark plume was still evident. As above, the whitish-colored plume component was also visible.

Gaseous Emissions. Table 4 summarizes NO_X and CO emissions for oil/gas cofiring.

Table 4
Baseline Gaseous Emissions – Oil/Gas Cofiring

Load, t/h	Excess O_2, %*	NO_X, ppm (dry at 5% O_2)	CO, ppm (dry at 5% O_2)
160	2.27 (normal)	184	182
160	2.98 (high)	163	31
140	2.26 (low)	169	599
140	2.88 (normal)	185	47

* Excess O_2 measured at air heater inlet.

As expected, the NO_X emissions where lower than those measured for 100% oil firing due to the lower-NO_X characteristics of gas firing (see below). CO emissions were higher than for 100% oil firing, reflecting the relatively high CO emissions characteristics for the original burner when firing gas.

At 160 t/hr, the NO_X emissions decreased when the excess O_2 was raised. The opposite effect of increased excess O_2 was expected, and no reason can be offered for the observed behavior.

Pre-REACH Test Results – Gas Firing

The tests with 100% gas firing were conducted with all burners in service at a maximum boiler load of 160 t/h steam flow. Two boiler excess O_2 levels were tested corresponding to: (1) the normal excess O_2 as specified by the boiler operators, and (2) an increased excess O_2 approximately 1.0% above the normal excess O_2 level. The

latter test condition was established after it was shown that the normal excess O_2 resulted in high CO emissions.

Gaseous Emissions. Table 5 summarizes NO_X and CO emissions for 100% gas firing.

Table 5
Baseline Gaseous Emissions – Gas Firing

Load, t/h	Excess O_2, %*	NO_X, ppm (dry at 5% O_2)	CO, ppm (dry at 5% O_2)
160	1.32 (normal)	127	6,259
160	2.31 (high)	163	22

* Excess O_2 measured at air heater inlet.

NO_X emissions where lower than operation with 100% oil or with oil/gas cofiring. At the normal excess O_2 condition, CO emissions were high and indicated that the burners were normally operated with inadequate combustion air.

Installation and Startup of REACH-Modified Burners at Madero

The REACH-modified Verloop burners were installed in Madero Boiler MP-B4 during a major maintenance outage from January 15-February 20, 2001. PEMEX contractors performed all installation work. The primary activities were demolition of the existing Peabody burners; installation of the REACH-modified Verloop burners, air registers, and burner piping; installation of new gas hoses; installation of new atomizing steam and oil hoses; relocation and installation of the original gas ignitors; relocation and installation of the existing Durag flame detectors; and installation of new oil gun coupling blocks. EPT personnel were on site to supervise installation and offer support to PEMEX contractors. In view of the extensive work that was performed during the maintenance outage and the tight clearances in the windbox, the installation went well.

Table 6 and Table 7 summarize EPT recommendations for burner alarms and trips for gas and oil operation, respectively.

Table 6
Gas-REACH Burners Recommended Alarms and Trips
Boiler MP-B4

Alarm/Trip	Recommendation
Maximum gas pressure alarm	3.5 kg/cm^2
Minimum gas pressure alarm	Existing pressure setting (0.1 kg/cm^2)
Maximum gas pressure trip	4.0 kg/cm^2
Minimum gas pressure trip	Existing pressure setting (0.05 kg/cm^2)

Table 7
Oil-REACH Burners Recommended Alarms and Trips
Boiler MP-B4

Alarm/Trip	Recommendation
Maximum oil pressure alarm	10.5 kg/cm^2
Minimum oil pressure alarm	2.5 kg/cm^2
Maximum oil pressure trip	11.5 kg/cm^2
Minimum oil pressure trip	2.0 kg/cm^2

Boiler MP-B4 was started up with the REACH-modified burners on February 21, 2001. Gas ignitors were fired on each burner sequentially. Subsequently, each main burner was fired on gas sequentially at a reduced firing rate to evaluate flame shape and warm up the boiler. The boiler was warmed up for 24 hours by firing a single gas burner and rotating through all six burners.

Prior to lighting off burners on No. 6 oil, the atomizer was removed from one oil gun and atomizing steam was blown through the steam lines, atomizing steam valve, and the burner to remove any loose welding material that may be present. On February 23, the first oil burners were placed in service. Note that PEP-99 emulsion was added to the oil during the startup. As with gas, each burner was placed in service sequentially at reduced firing rate and the flame shape was evaluated. By February 24, all burners

had been checked out and the boiler was on line. Combustion conditions and flame stability were excellent, i.e., the flames were bright and clear, there was no flame impingement on the furnace walls, and the flames were firmly anchored to the flame stabilizers. One issue that was observed was inconsistent performance of the Durag flame detectors. Flame signals were weak and inconsistent for many of the burners when firing oil. Inspection of the flames through the detector view port showed intense, bright flames with good "flicker" (both flame intensity and flame flicker are needed for a good flame detector signals).

The composition and pressure of the gas fuel supplied to boiler MP-B4 from the refinery generally varies over time with changes in refinery process operations. The gas injectors were designed to achieve rated fuel flow at design supply pressures for a given gas composition. During startup of Gas-REACH, it was evident that higher pressures at the burner were required to achieve design fuel flow and that modifications to the Gas-REACH fuel injectors were required. Accordingly, during a boiler outage, the discharge orifices on the Gas-REACH injectors were enlarged to increase the flow area by 40 percent. Apparently, there was a restriction at an unknown location in the Verloop burner that was increasing pressure drop. In subsequent testing, it was demonstrated that the design gas flow could be achieved within the operating pressure limits of the gas supply system. The composition of the gas fuel burned during Gas-REACH commissioning and baseline tests are provided in Appendix E. A gas flow versus pressure curve for Gas-REACH is provided in Appendix F.

Gas-REACH produced stable flames, which were readily detected by the burner flame scanners. In addition, the Gas-REACH burners were easily lit off and shut off per normal plant operating procedures.

At the same time, increased flow capacity oil atomizers were supplied because of higher than expected pressure drop across the oil flow control valve. This limited the oil pressure achievable at the burners, which was too low to achieve maximum steam flow. Ultimately, EPT also supplied a new oil flow control valve with a larger port size to reduce pressure drop across the valve, which increased operating flexibility for the plant operators. The oil flow versus pressure curves for the REACH atomizers are provided in Appendix G and the specifications for the oil flow control valve are presented in Appendix H.

For the increased-capacity V-Jet atomizers, maximum load of 160 t/h was achieved at an oil pressure of 7.0 kg/cm^2 and atomizing steam pressure of 8.2 kg/cm^2 as measured at burner No. 2. Unfortunately, burner No. 2 was the only burner equipped with pressure gauges during the startup testing, which made combustion optimization and diagnostics difficult because it was not possible to determine if maldistributions in oil and atomizing steam were present among the burners. Shortly after startup the only furnace view port that allowed good viewing of the burners in the first elevation was plugged, which further hampered optimization of burner performance. When viewed through the burner peepholes at the burner front, the oil and gas flames appeared bright and clear. However, due to the absence of furnace view ports, it was not possible to inspect the burner throats or tips of the flames to ascertain combustion quality.

It was observed during the startup tests that the Durag D-LE 600 U 20 flame detectors were not picking up strong flame intensity or pulse rate signals from the oil flames. Although the flames were bright, attached, and exhibited good flicker by inspection through the flame detector sight port, the signal strengths were weak on five of the six burners. The Durag representative was invited to the site to diagnose the detector performance. The conclusion by Durag was that the oil flames were very good, but the existing flame detector was best suited for gas firing and not oil. This was indicated by very strong signal strengths on gas but not oil. The Durag representative recommended that the flame detectors be replaced with Durag model D-LE-601 UA 45. The recommended detector was designed specifically for gas and oil firing, and had a much wider spectral range (190 to 520 nm) than the existing detectors (190 to 270 nm). A demonstrator Durag model D-LE-601 UA 45 detector was installed on one burner at Madero MP-B4 and produced very strong signal strength for oil and gas firing for over a month. Although not part of EPT's work scope, EPT purchased a full set of the D-LE-601 UA 45 detectors to replace the existing flame detectors. The new flame detectors were delivered to the site in July 2001 to be installed by PEMEX.

REACH Emissions Tests

REACH combustion optimization and emissions tests were conducted in two phases. Phase 1 included tests of V-jet atomizers with an 80-degree spray angle. Although there was a significant reduction in PM and NO_X emissions, it was believed that further

improvements would be achieved with atomizers having slightly different spray characteristics.

During Phase 1 the combustion optimization efforts were hampered by lack of furnace view ports and pressure gauges on the burners for diagnostic purposes, and also by weak signals from the flame detectors. These limitations were corrected and a final Phase 2 acceptance test program with optimized equipment and combustion conditions will be performed during 2001. The Phase 2 tests will evaluate atomizers with different spray angles to determine the atomizer configuration that achieves the best combination of PM and NO_X emissions.

The results of the Phase 1 tests are presented in this report. The Phase 2 results will be presented in an addendum to this report.

Similar to the baseline tests, the formal tests to document REACH emissions and combustion performance were conducted utilizing emissions test equipment and personnel from IIE. EPT engineers provided on-site test management and support. As in the baseline tests, the fuel oil was not treated with PEP-99.

The matrix of baseline test conditions is contained in Table 8. The IIE test report and EPT boiler data sheets are provided in Appendices B, C, and D.

Table 8
REACH Emissions Test Matrix

Test No.	Steam Flow, t/h	Excess O_2, %	Test Measurements by IIE/PEMEX			
			NO_x	O_2	CO	PM
Oil Fuel – No PEP-99 – Phase 1						
1	Max (160)	High				
2	140	High				
Normal Oil And Gas Fuel Operation– No PEP-99 – Phase 1						
3	140	Normal				
4	Max (160)	Normal				
100% Gas Firing (6 Burners)						
5	140	Low				--------
6	"	High				--------

REACH Test Results – Oil Firing (Phase 1)

The test results reported herein represent Phase 1 of the Oil-REACH emissions and combustion characterization, as described above. Consequently, the emissions data for 100% oil firing and for oil/gas cofiring correspond to a partially optimized Oil-REACH combustion condition and do not reflect the full emissions reduction potential of the technology.

PM and gaseous emissions tests with 100% oil firing were conducted with all burners in service at a maximum boiler load of 160 t/h steam flow and at a reduced load of 140 t/h. At both loads one boiler excess O_2 level was tested, which was at the low control limit of the boiler control system. It was not possible to reduce the excess O_2 due to settings of the plant digital control system that could not be readily changed during the tests. At 160 t/hr, the excess O_2 was approximately 0.6% above the normal excess O_2 evaluated during the baseline tests at the same load.

PM Emissions. The PM emissions were 195 mg/Nm^3 and 193 mg/Nm^3 at 160 t/h and 140 t/hr load, respectively. These values were considerably below the pre-REACH baseline levels, but above the 150 mg/Nm^3 target values for REACH. The PM emissions with REACH represented reductions in excess of 75 percent from baseline levels.

Figure 6 compares the PM emissions with 100% oil firing (6 Oil Burners) for pre-retrofit and REACH.

The stack plume was predominantly whitish-colored due to sulfuric acid condensation. Periodic light-brownish-colored "puffs" were evident in the plume, indicating that the excess O_2 was near the minimum excess O_2 level for the particular REACH configuration.

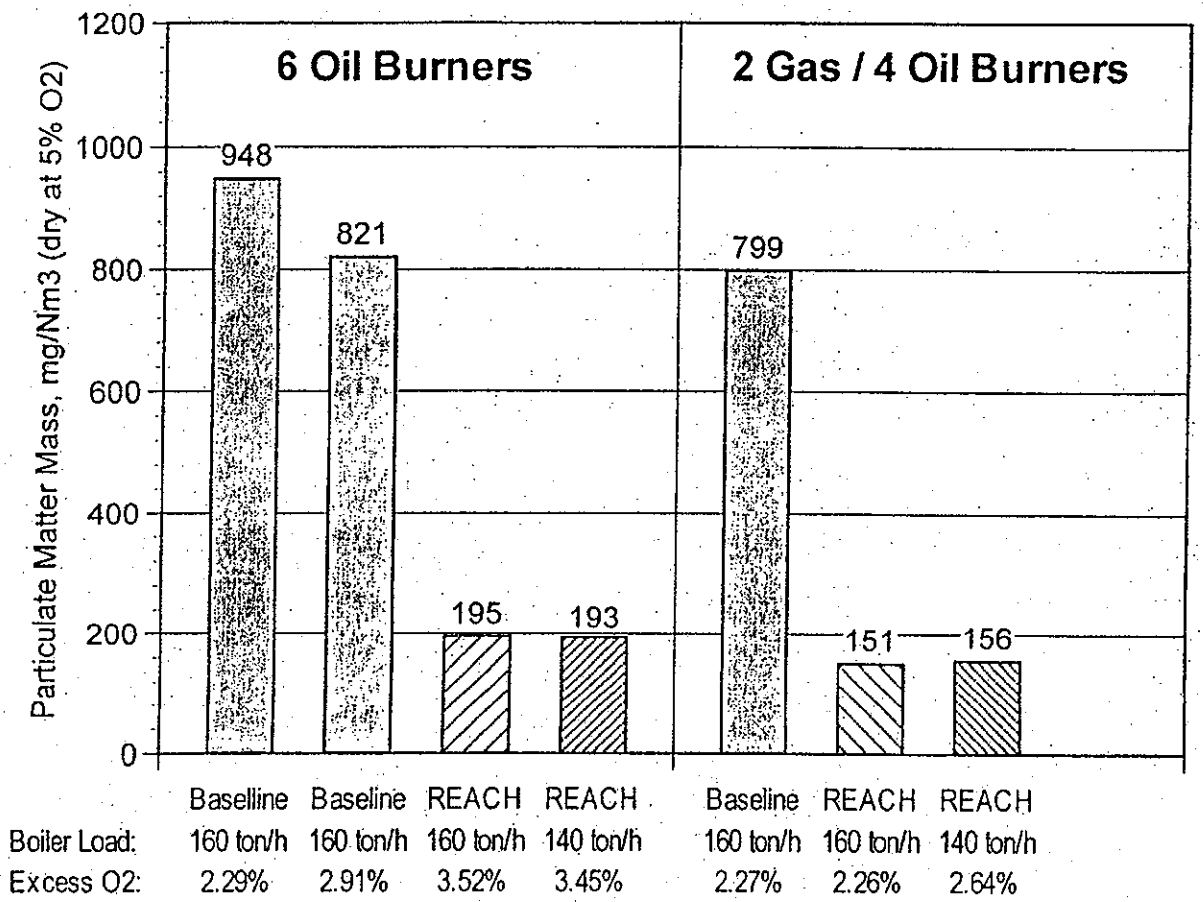

Figure 6. PM emissions for 100% oil firing and for oil/gas cofiring.

Gaseous Emissions. Table 9 summarizes NO_X and CO emissions for 100% oil firing.

Table 9
REACH Gaseous Emissions – Oil Firing

Load, t/h	Excess O_2, %*	NO_X, ppm (dry at 5% O_2)	CO, ppm (dry at 5% O_2)
160	3.52 (high)	185	4
140	3.45 (high)	180	15

* Excess O_2 measured at air heater inlet.

The baseline and REACH NO_X emissions are plotted versus excess O_2 in Figure 7. Assuming that the NO_X sensitivity to excess O_2 for REACH is similar to the baseline data, REACH reduced the NO_X emissions by 25 to 30 percent from baseline levels, when compared at the same excess O_2.

REACH Test Results – Oil/Gas Cofiring (Phase 1)

Burners No. 1 and No. 3 (lower-left and lower-right burners) were operated on gas, while the other four burners were fired with oil. The proportion of heat input to the boiler was approximately one-third from gas and two-thirds from oil.

PM Emissions. The PM emissions were measured at a normal excess O_2 condition at 160 t/h and 140 t/h. PM emissions were 156 mg/Nm^3 and 151 mg/Nm^3, respectively. Compared to the pre-REACH baseline test with oil/gas cofiring at 160 t/h, the REACH emissions were 80 percent lower.

Figure 6 (shown previously) compares the PM emissions with oil/gas cofiring (2 Gas / 4 Oil Burners) for baseline and REACH.

During the PM test, the plume appearance was similar to 100% oil firing.

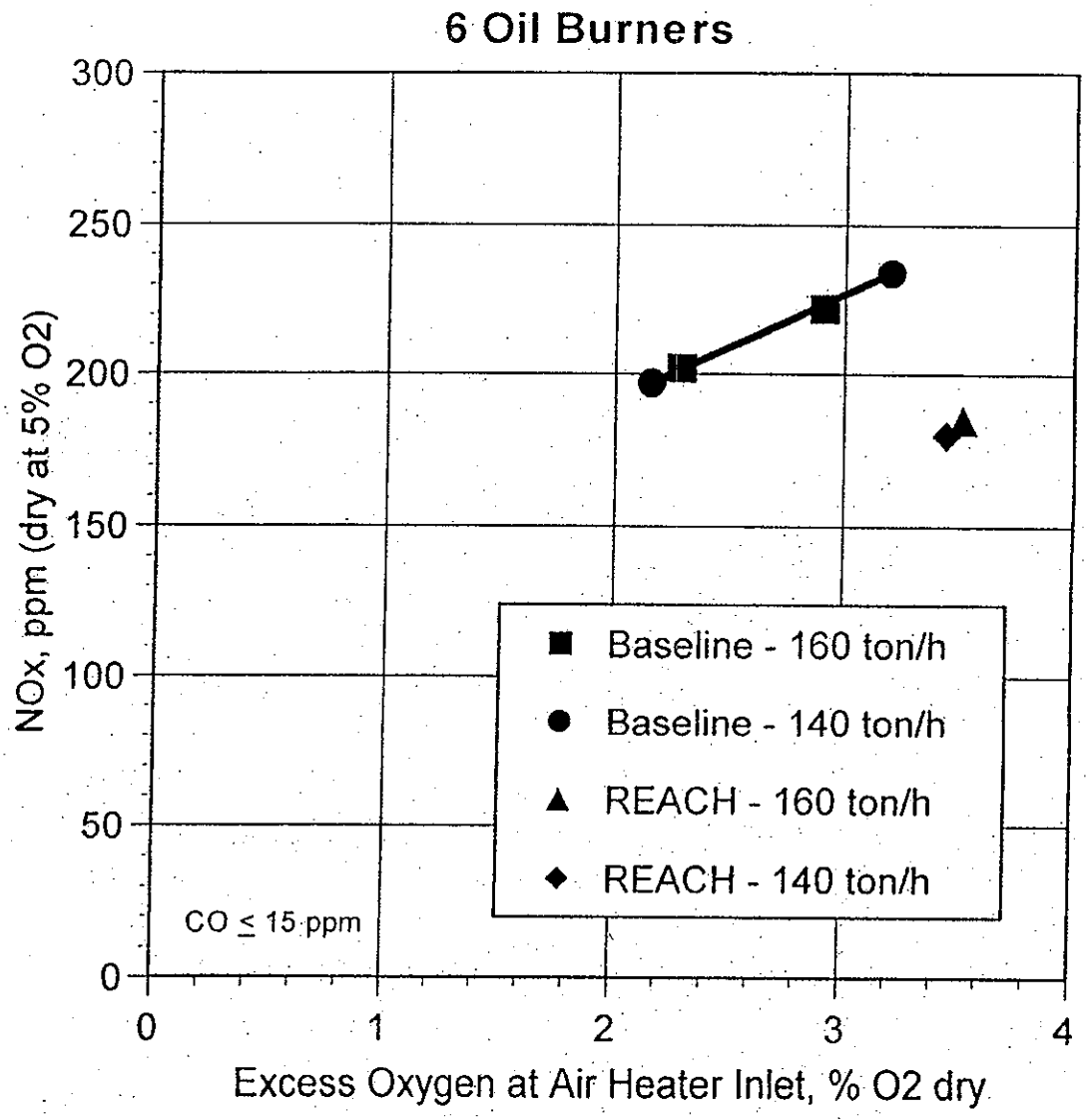

Figure 7. NOx vs. excess O_2 for Oil REACH and baseline – 100% oil firing.

Gaseous Emissions. Table 10 summarizes NO_X and CO emissions for oil/gas cofiring.

Table 10
REACH Gaseous Emissions – Oil/Gas Cofiring

Load, t/h	Excess O_2, %*	NO_X, ppm (dry at 5% O_2)	CO, ppm (dry at 5% O_2)
140	2.64 (normal)	151	5
160	2.26 (high)	145	12

* Excess O_2 measured at air heater inlet.

As expected, the NO_X emissions where lower than measured for 100% oil firing due to the lower-NO_X characteristics of gas firing (see below). The CO emissions are also lower than baseline levels, reflecting the lower CO emission characteristics of Gas-REACH compared to the original burner. The baseline and REACH NO_X emissions are plotted versus excess O_2 in Figure 8.

REACH Test Results – Gas Firing

Acceptance tests with all six burners firing gas were conducted at a boiler load of 140 t/h. This load was the maximum load achievable with reduced gas supply header pressure resulting from low refinery gas production at the time of the tests. It was originally planned to conduct these tests at 160 t/h.

Gaseous Emissions. The NO_X emissions with Gas-REACH are compared in Figure 9 to baseline NOX emissions obtained with the original Peabody burners at 160 t/h. The Gas-REACH NO_X emissions are considerably below the baseline NO_X emissions. At an average excess O_2 of 2.0%, Gas-REACH reduced the NO_X emissions by approximately 40 percent from baseline levels. Accounting for the lower boiler load for the Gas-REACH tests, the actual NO_X reduction is estimated to be 30-35%. The NO_X emissions with Gas-REACH also exhibit little or no sensitivity to excess oxygen, which is a generic characteristic of Gas-REACH technology.

The CO emissions were reduced with Gas-REACH. It was possible to operate at 1.4% excess O_2 with less than 100 ppm CO, whereas with original burners the CO emissions were over 6,000 ppm at a comparable excess O_2. The reduction in CO represents approximately a 2 percent increase in boiler efficiency at 1.4% excess O_2.

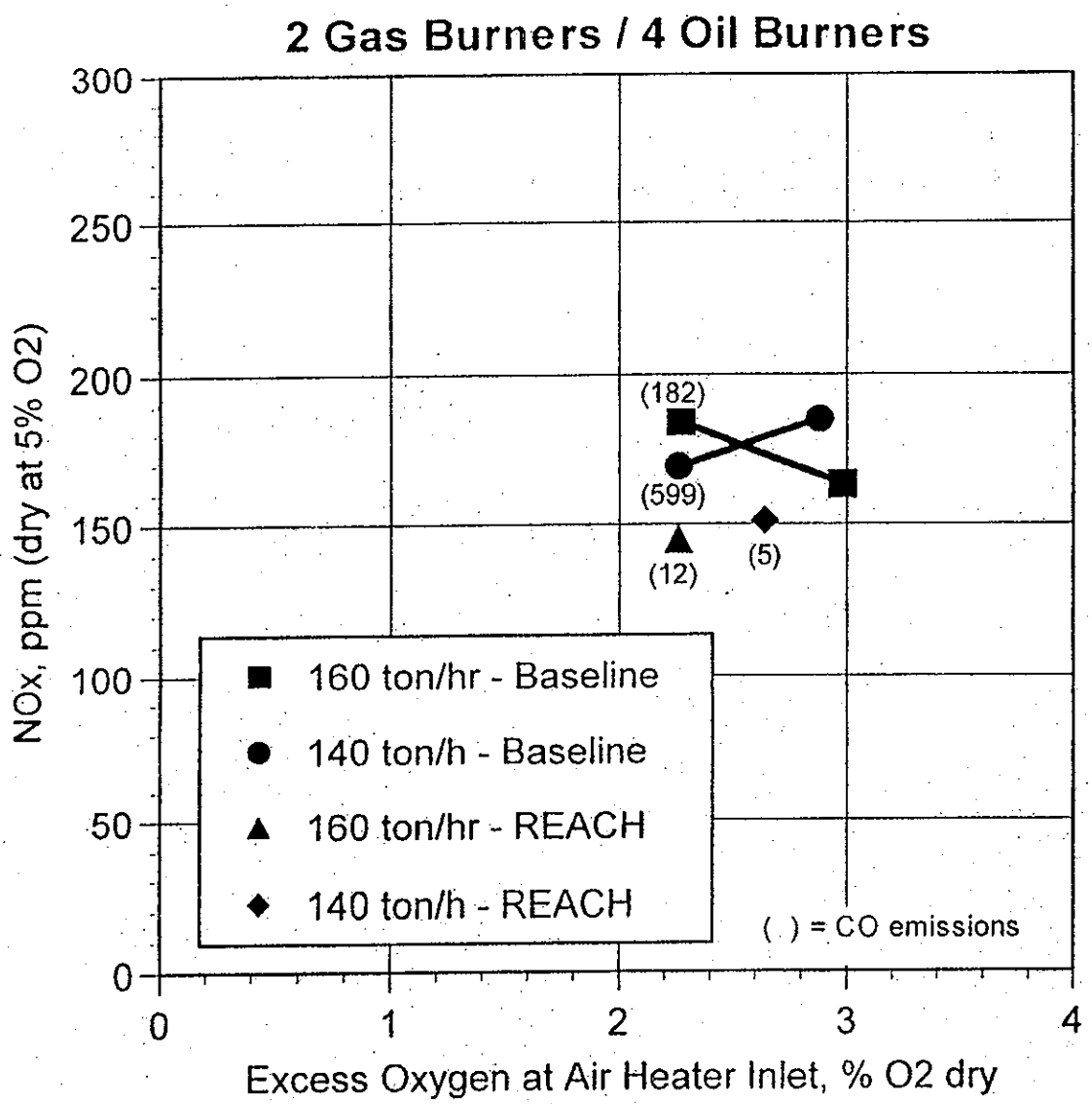

Figure 8. NOx vs. excess O2 for REACH and baseline – oil/gas cofiring.

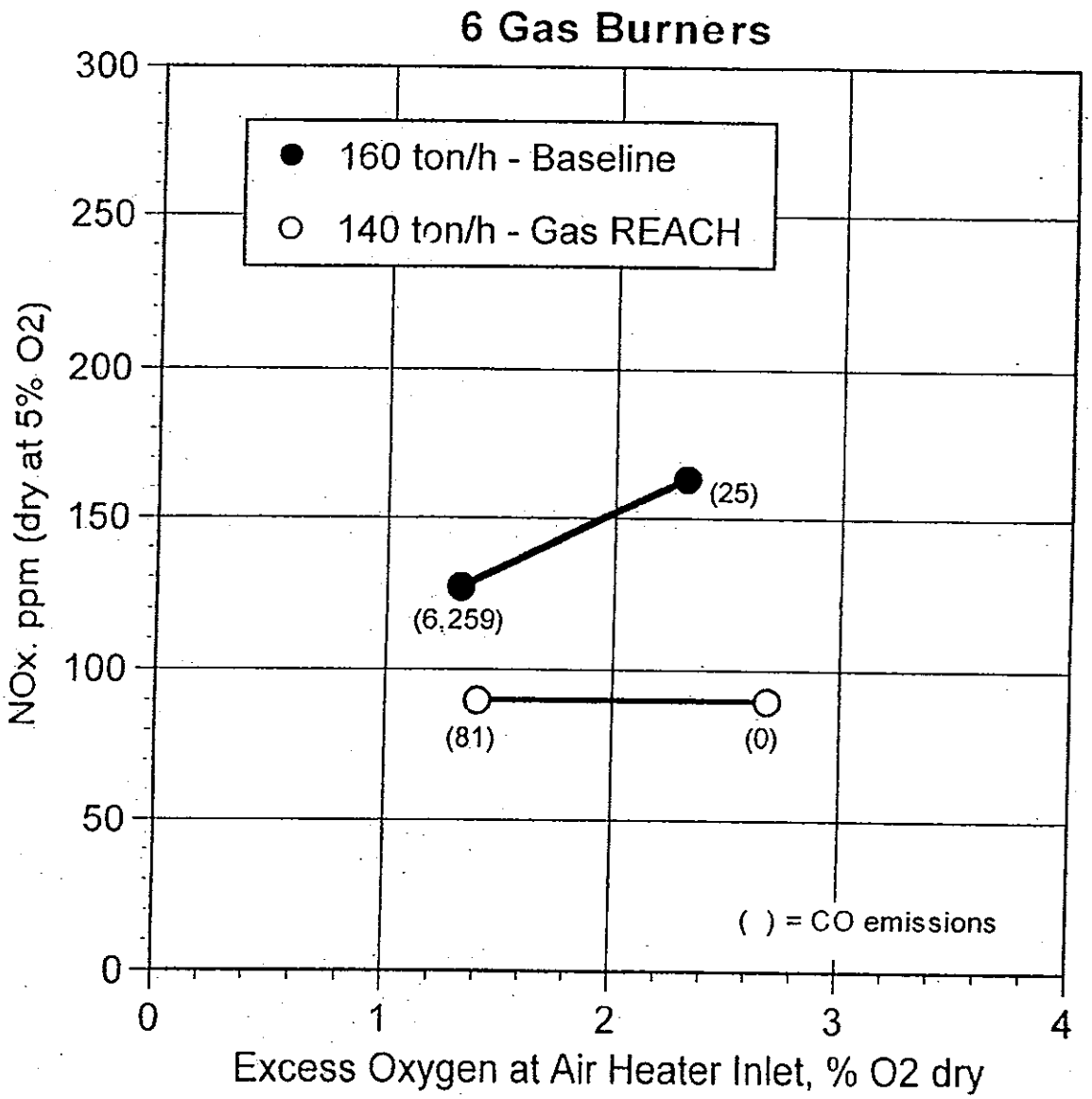

Figure 9. NOx vs. excess O_2 for Gas REACH and baseline – 100% gas firing.

Madero MP-B4 Operating Recommendations

A number of operating issues was evaluated and recommendations were developed during the initial startup tests. These recommendations are discussed in the following subsections.

Removing Burners from Service

1. When a burner is taken out of service, the air slide (register) should be closed on that burner to maintain the proper air/fuel ratio on in-service burners and to minimize the chances of smoke from the chimney.
2. To prevent damage to the atomizers by overheating, oil guns that are not in service should be either cooled with adequate purge steam flow or removed from the burner. Otherwise, the atomizer will overheat and the metal will soften. If it desired to insert and couple an oil gun so it is ready to fire, the manual isolation valve on the oil piping should be closed and the steam purge should be on.

Oil Gun and Atomizer Disassembly, Cleaning, and Reassembly

When necessary to disassemble an oil gun for inspection or cleaning, care should be exercised in how the gun is handled during the disassembly procedure. It is recommended that the operator follow the guidelines below:

1. Place the oil gun on a level work surface fitted with either a holding fixture designed for that particular oil gun or a pipe vise. Secure the oil gun in the fixture or pipe vise so that the atomizer end of the gun can be dissembled. If a pipe vise is utilized, never place the atomizer components between the pipe vise jaws. Also, the oil gun barrel should be positioned in the pipe vise such that the jaws of the vise do not deform the retaining nut threads of the outer barrel. Inspect the outer surfaces of the oil gun for coke and sticky oil deposits. If these deposits appear to be excessive, then notify the Operations Supervisor. It may be necessary to inspect the burner internals or the oil gun guide-tube. NOTE: It is recommended that PEMEX fabricate or purchase an oil gun cleaning station for disassembling and cleaning atomizers. Further, a storage rack should be installed at the burner front for placing oil guns when they are removed from the burner. EPT can supply designs or hardware at the request of PEMEX.

2. Before attempting to remove the retaining nut from an oil gun that as been removed from service and purged, it is very important to allow the oil gun assembly to cool. A good indication that it is safe to remove the retaining nut is when it is possible for the operator to touch the nut for 1-2 seconds with his bare hand without discomfort.

3. Using the retaining nut wrench provided by EPT (or the proper size box wrench), remove the retaining nut from the outer barrel. Never use a pipe wrench to remove the nut, since damage to the nut or thread of the outer barrel may occur.

4. Carefully remove the atomizer parts (i.e., atomizer spray plate, back plate, and retaining nut) and place each component on a clean surface.

5. Each component should be cooled, degreased (e.g., placed in a kerosene bath, and inspected. When handling the atomizer parts, remember that each is a finely machined component. Hand tools such as hard metal scrapers, files, drill bits, or any sharp object must not be used to clean these parts, because the smallest nick or scratch on the machined surfaces can cause an oil or steam leak to occur between the mating components. A soft brass bristle brush or wheel is recommended.

6. Components that are coated with carbon should be placed in a carbon cutting solution (e.g., kerosene or "Safety Clean 105") to soften the accumulated material. Be sure to check the threads in the retaining nut. Any carbon in the threads must be removed if the nut is to be re-used.

7. Visually examine the atomizer components, including the passages in the spray plate and back plate (or plug). The atomizer should be replaced if: (a) drilled holes are observed to be out-of-round, have worn edges, or have deep scratches; (b) slots appear to be worn; or (c) cracks are observed in the webs of the components. It is recommended that atomizer components be maintained and replaced in matched three-piece sets consisting of the spray plate, back plate (or plug), and retaining nut. Due to normal wear and tear, atomizers should be replaced after being in service for 9 to 12 months, depending on the unit operating cycle and properties of the fuel oil.

   If the lapped surface of any atomizer component shows evidence of wear, that component (along with any mating component) should be replaced. A worn atomizer component would typically have the appearance of "shadows" around the drilled holes or machined passages.

If slight scratches are observed on the lapped surfaces, it is permissible to carefully lap the components during the cleaning procedure using a lapping fixture. In this manner, the necessary flatness to maintain the relative parallelism between the mating components will be achieved.

8. The interior of the outer barrel and both the inner and outer surfaces of the inner barrel of the oil gun should be examined. If an accumulation of oil deposits exists on these surfaces, the barrels should be removed from the headstock. The barrels should then be cleaned in an appropriate cleaning tank. It may be necessary to run a pipe-sized reamer through the inner and outer barrels to remove any stubbornly attached deposits. Examine the condition of the barrels. If any bends in the barrel or significant damage to threads are found, that individual barrel should be replaced.

9. If new or recently cleaned atomizer components are not to be returned to service right away or if they are to be stored for any period of time, be sure to apply a thin coat of machine oil (or a product such as WD-40) to all machined surfaces to prevent the formation of rust. Any rust will cause a problem between the machined surfaces and necessitate cleaning and re-lapping of components.

10. Once the atomizer parts have been sufficiently cleaned (or replaced), carefully wipe each component with a lint free cloth before installing that component in the oil gun. It is recommended that a small coat of anti-seize compound be applied to the threads of the outer barrel of the oil gun. <u>However, care must be exercised so that none of the anti-seize is applied to any part of the atomizer components or lapped surfaces.</u> Be sure to install the atomizer components in the proper orientation, with the oil slots in the spray plate top and bottom.

    Extreme care should be exercised to ensure that no foreign material becomes trapped between the mating surfaces of the atomizer during the reassembly procedure. Particles trapped between the surfaces can grossly affect the performance of the atomizer. If the operator suspects that foreign material might have become trapped between the lapped faces, it is recommended that the surfaces be re-cleaned before the retaining nut is installed.

11. Be sure that the atomizer is properly centered with respect to the gun centerline and then install the retaining nut. Be sure to use the proper size wrench to install the nut. Tighten the atomizer retaining nut on the oil gun to 150 ft-lb (200 N/m) torque.

Oil Gun Purging

Typical oil gun purge systems are equipped with crossover piping and automatic valves to allow the oil and steam sides of the oil gun to be purged with steam simultaneously after the automatic oil valve closes. At Madero MP-B4 there was no provision to purge both sides of the gun. The oil gun purge system only purges the oil side of the gun. To provide a thorough purge of the oil gun during shut-down of an oil burner, the following procedure should be followed. Implementing this procedure may require reprogramming of the Burner Management System.

1. Start the oil gun steam purge immediately after the automatic fuel oil valve at the burner is closed. The length of time that the oil gun is inserted in the burner without steam purge should be minimized to avoid overheating the oil atomizer.
2. Start purging the atomizing steam side of the oil gun <u>before</u> starting the purge to the oil side of the gun. This will require the atomizing steam valve to remain open. Otherwise, oil will be forced into the steam side of the gun, which could coke and plug the holes in the back plate of the atomizer on the steam side.
3. Open the purge steam valve and start purging the oil side of the gun.
4. Allow the purge to continue for a minimum of 3 minutes. Adjust the steam purge duration, if necessary, until the oil passages of the oil gun are observed to be clean of oil.
5. Stop the purge of the oil side of the gun (close the purge valve) <u>before</u> stopping the purge of the atomizing steam side of the gun (close the atomizing steam valve).
6. After the steam purge is complete, immediately pull out the oil gun from the burner. If the oil gun is allowed to remain inserted in the burner without steam purge, the oil atomizer may overheat and its operating life will be reduced.

Oil Burner Operating Pressures

Operate the oil burners with a steam-to-oil differential pressure between 1.0 to 1.5 barg (measured in the control room). This will give a differential pressure at the burners between approximately 1.2 and 1.7 kg/cm^2. Differential pressure at the burners less than zero psid (negative) is not recommended because it may cause the burners to smoke.

Oil Firing Temperature

It is very important that the oil viscosity remain in the range of 20 to 30 Centistokes (100-150 SSU) for good atomization and carbon burnout. For the heavy Mexican fuel oil, this requires an oil temperature of 120-130°C. During the REACH startup and combustion optimization tests it was observed that the oil firing temperature was 105-108°C. Consequently, the viscosity was well below the design range. It is recommended that PEMEX regularly measure the viscosity characteristics of the fuel oil and maintain the appropriate temperature for a viscosity of 20 to 30 Centistokes, which will typically require an oil temperature of at least 120°C.

Cofiring Operation with Gas and Oil Burners

Madero MP-B4 is typically operated with two burners firing gas and four burners firing oil, or with one burner firing gas and five burners firing oil. Under these cofiring conditions, it is important that the heat inputs and air/fuel ratios are balanced among the burners. Otherwise the oil burners can smoke if they are operated with a deficiency of combustion air. Similarly, the gas burners can generate excessive CO emissions if they have too low an air/fuel ratio. Figure 10 presents the total boiler oil flow rate (kg/s) required for a given boiler steam flow for one, two, and three gas burners in service (and the remaining burners firing oil). The gas should supply the balance of the heat input to maintain the desired load.

For example, Figure 10 shows that for four oil burners and two gas burners and a desired steam flow of 160 t/h, the total oil flow should be 2.26 kg/s. The gas flow rate (Nm^3/s) should then be adjusted by the plant operator to maintain 160 t/h. Similarly, at a boiler steam flow rate of 140 t/h, the required oil flow rate would be 2.0 kg/s.

Excess Oxygen vs. Load Operation

For oil and gas firing the plant is currently operating with the excess oxygen versus load profile programmed into the DCS that was used for the Peabody burners. Tests conducted with 100% gas firing in June 2001 indicated that the existing excess oxygen versus steam flow rate is satisfactory. For oil firing, the present settings are acceptable on an interim basis. Combustion tests to be performed by EPT later during 2001 will determine the final recommended excess oxygen versus load for oil firing. Table 11 presents recommended excess O_2 settings.

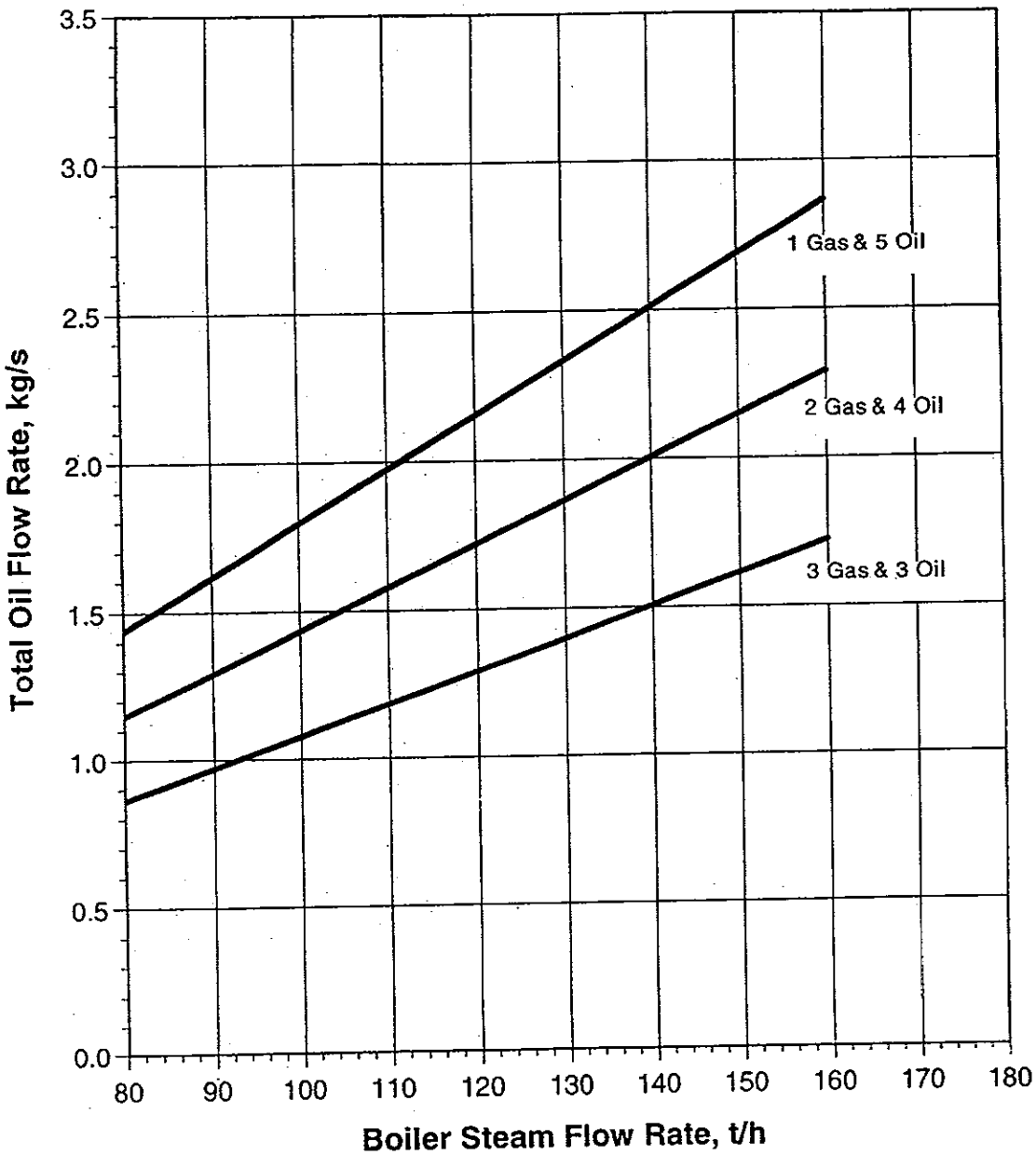

Figure 10. Total oil flow rate vs. steam flow for Madero MP-B4 for different numbers of gas burners in service.

Table 11
Recommended Excess Oxygen for 160 t/h and 140 t/h

Operating Configuration	Boiler Steam Flow, t/h	Plant Excess O_2, %
100% Oil Firing	140	TBD
	160	TBD
Gas/Oil Firing	140	TBD
	160	TBD
100% Gas Firing	140	1.4
	160	1.4

Other Operating Recommendations

1. The manual atomizing steam valves at individual burners should not be throttled to improve scanner intensity or set steam-to-oil differential pressure, *unless pressure gauges are installed on the oil and steam piping at all the burners to permit determination of burner fuel flow rate for each burner.* Otherwise, severe maldistribution of fuel flow among the burners may result. Atomizing steam should be controlled in the header. NOTE: with all other factors remaining the same, decreased steam pressure at a single burner will increase oil flow to that burner.

2. Cooling air should always be supplied to the flame scanners.

Technical Summary

The following represents the main steps in the process of this effort and the results:

General

1. Low emissions REACH combustion technology was successfully retrofitted to a 160 t/h steam boiler (MP-B4) at the PEMEX Madero refinery. The retrofit involved modification and installation of Verloop burners that were previously purchased by PEMEX to replace the existing Peabody burners. The modifications included installation of low NO_X and low PM combustion hardware for oil firing (Oil-REACH) and low NO_X combustion hardware for gas firing (Gas-REACH).

2. The Verloop burner is installed at many refinery boilers operated by PEMEX. Consequently, the REACH retrofit utilizing Verloop burners at Boiler MP-B4 demonstrates the broad applicability of REACH technology within the PEMEX system.
3. The REACH technology achieved substantial reductions in stack emissions at Boiler MP-B4. Reduced emissions are the result of improved oil atomization, improved burner aerodynamics, and internally staged combustion produced by REACH hardware. Specific conclusions regarding emission reductions are presented below.
4. The estimated CO_2 savings per year for Boiler MP-B4 with REACH technology is 5,300 tons per year.
5. The estimated payback period is less than one year for the REACH technology.
6. The estimated total cost for this effort was $750,000. EPT and PEMEX provided 70% of the funds.
7. The REACH retrofit of Boiler MP-B4 involved the joint efforts of the United States Agency for International Development's (USAID) Center for Environment and USAID/Mexico, PEMEX Refinacion (PEMEX), Electric Power Technologies, Inc. (EPT), and the IIE. This project paves the way for future REACH retrofit projects at PEMEX.

Oil-REACH

1. Operation with all burners firing fuel oil (100% oil) without PEP-99 at a maximum boiler load of 160 t/h steam flow was demonstrated with Oil-REACH.
2. Oil flames were bright and stable, and exhibited excellent light-off characteristics. Flame detection was excellent with the replacement Durag model D-LE-601 UA 45 flame detector recommended by Durag and supplied by EPT.
3. Reductions in PM emissions in excess of 75 percent were achieved by Oil-REACH during the Phase 1 tests without PEP-99. Further reductions in emissions are expected after the Phase 2 optimization of oil combustion.
4. Simultaneous with the reductions in PM emissions, reductions in NO_X emissions of 25-35 percent below baseline levels were achieved.
5. The furnace excess oxygen level required to maintain a clear stack during oil firing (~3%) was higher than expected. A change in the atomizer spray angle is anticipated to reduce the excess oxygen requirement and will be evaluated during the Phase 2 combustion optimization tests.

Gas-REACH

1. Gas-REACH has been demonstrated with all burners firing gas (100% gas) at boiler loads up to 140 t/h steam generation. Operation at maximum load (160 t/h) with 100% gas, although not a normal operating practice, should present no combustion problems and may be confirmed by the plant.
2. The Gas-REACH burners exhibited excellent light-off characteristics, good flame appearance and stability, and reliable detection by flame scanners.
3. NO_X emissions with 100% gas firing were 30-35% lower with Gas-REACH compared to baseline levels at similar furnace excess oxygen levels.
4. Gas-REACH eliminated high CO emissions observed at normal excess oxygen conditions during baseline tests. The reduction in CO emissions represents an improvement in boiler efficiency of approximately 2 percent.
5. Operation with 33% gas/67% oil (oil/gas cofiring) was evaluated at 140 t/h and 160 t/h. NO_X and PM emissions were substantially lower than baseline levels. Further reductions in emissions are expected after the Phase 2 optimization of oil combustion.

Conclusions

This collaborative program aimed to determine the feasibility of innovative combustion technology for PEMEX's boilers. In this regard the combined resources of the partners yielded a successful program. Perhaps as importantly is the effort made by all stakeholders to forge a partnership that relied upon the strengths of each organization.

The results of the demonstration effort are positive. Efficiency gains in the boiler are significant; providing lower operational costs to PEMEX while reducing emissions such as carbon dioxide and particulate matter, and providing direct evidence of the characteristics of the REACH technology. These positive results could reduce carbon dioxide emissions approximately 200,000 tons/year should PEMEX retrofit all its boilers while providing a payback to PEMEX within one year. The value of supplying equipment and services to PEMEX to retrofit its boilers with combustion technology is also quite significant. In reaching these accomplishments, USAID was able to leverage its limited budget by 3:1.

The development, design, and implementation of this program can, in many ways, serve as a model - directly or by process. Directly from the standpoint that large generators of electricity can benefit from lowering operational costs and reducing emissions. The process employed in this program of working with the host country utility to determine its needs and catalyzing, brokering, and assisting a partnership with the private sector and USAID's counterpart is a model that can be quite effective across sectors and technology

Appendix A

IIE Pre-REACH Baseline Emissions Test Report
(September 2000)

INSTITUTO DE INVESTIGACIONES ELÉCTRICAS

UNIDAD DE PROCESOS TÉRMICOS

Convenio Específico No.
SMPT-33-2000

RESULTADOS PRELIMINARES

EVALUACIÓN DEL COMPORTAMIENTO DE LA CALDERA MP-B-4, COMO LÍNEA BASE, ANTES DEL CAMBIO DE QUEMADORES, REFINERÍA "FRANCISCO I. MADERO"

Septiembre de 2000

Jesús Espinoza Garza
Jorge A. Altamirano Bedolla
Adriana Penna García
Amando Martínez Aguilar
Jesús Padilla López

INSTITUTO DE INVESTIGACIONES ELÉCTRICAS

UNIDAD DE PROCESOS TÉRMICOS

RESULTADOS PRELIMINARES
PROGRAMA DE ACTIVIDADES CALDERA MP-B-4 REFINERÍA "FRANCISCO I. MADERO"

OBJETIVO:

Evaluación del sistema de combustión y medición de partículas suspendidas totales para obtener la LÍNEA BASE como punto de referencia para el cambio de quemadores en la caldera MP-B-4.

CONDICIONES DE PRUEBA:

- **Máquina estable a 75% y 100% de carga**
- **Variación de tipo de combustible (combustóleo, combustóleo/gas y gas)**
- **Operación sin soplado de hollín ni limpieza de quemadores durante las pruebas**

ACTIVIDADES REALIZADAS:

Miércoles 20 Septiembre 2000

- **Acondicionamiento de puertos de muestreo en ductos (antes PAR's) y en chimenea**
- **Instalación de equipos de medición**
- **Reunión con personal de la Refinería y de EPT, para establecer el programa de pruebas**

Jueves 21 Septiembre 2000

- **Mapeo de ductos**
- **Monitoreo de gases de combustión antes de calentadores de aire y chimenea a máxima carga, con 100% de combustóleo a 2.91% en exceso de oxígeno en ductos**
- **Monitoreo de gases de combustión antes de calentadores de aire y chimenea a máxima carga, con 100% de combustóleo a 2.29% en exceso de oxígeno en ductos**

Viernes 22 Septiembre 2000.

- **Monitoreo de gases de combustión antes de calentadores de aire y chimenea a 75% de carga, con 100% de combustóleo con oxígeno normal**
- **Monitoreo de gases de combustión antes de calentadores de aire y chimenea a 75% de carga, con 100% de combustóleo con oxígeno bajo**
- **Monitoreo de gases de combustión antes de calentadores de aire y chimenea a máxima carga con 4 quemadores de combustóleo y 2 de gas, con oxígeno normal**
- **Monitoreo de gases de combustión antes de calentadores de aire y chimenea a máxima carga con 4 quemadores de combustóleo y 2 de gas, con oxígeno bajo**

Sábado 23 Septiembre 2000.

- **Monitoreo de gases de combustión antes de calentadores de aire y chimenea a 75% de carga con 4 quemadores de combustóleo y 2 de gas, con oxígeno bajo**
- **Monitoreo de gases de combustión antes de calentadores de aire y chimenea a 75% de carga con 4 quemadores de combustóleo y 2 de gas, con oxígeno normal**
- **Cálculo de partículas suspendidas en el laboratorio**

Lunes 25 Septiembre 2000.

- **Monitoreo de gases de combustión antes de calentadores de aire y chimenea, con gas combustible, a máxima carga con oxígeno normal**
- **Monitoreo de gases de combustión antes de calentadores de aire y chimenea, con gas combustible, a máxima carga con oxígeno alto**
- **Elaboración de informe preliminar**

Martes 26 Septiembre 2000.

- **Entrega de informe preliminar**

RESULTADOS.

A continuación se presentan los resultados preliminares de las mediciones para línea base, en los que se incluyen los resultados de emisión de partículas para las pruebas que involucran combustóleo. Los resultados completos y conclusiones se presentarán como parte del informe final del proyecto.

REFINERÍA "FRANCISCO I. MADERO"

Tabla No. 1 INFORME DE EMISIONES MEDIDAS

Carga máxima:	**160 ton/h**	**100% combustóleo**			
	condición	**máxima carga**		**75% carga**	
Parámetro	Medición	Medición 1	Medición 2	Medición 3	Medición 4
O_2 (%)	Ductos	2.91	2.29	3.20	2.16
CO (ppm)	Ductos	7	17	3	13
O_2 (%)	Chimenea	3.26	2.77	3.63	2.62
CO (ppm)	Chimenea	0	1	0	4
NO_x (ppm)	Chimenea	246	230	254	227
PST (mg/m^{3}N)	Chimenea	918	1,081	-	-

Tabla No. 2 INFORME DE EMISIONES NORMALIZADAS

Carga máxima: 160 ton/h		**100% combustóleo**			
	Condición	**máxima carga**		**75% carga**	
Parámetro	Medición	Medición 1	Medición 2	Medición 3	Medición 4
O_2 (%)	Ductos	2.91	2.29	3.20	2.16
CO (ppm)	Ductos				
O_2 (%)	Chimenea	5.00	5.00	5.00	5.00
CO (ppm)	Chimenea	0	1	0	3
NO_x (ppm)	Chimenea	222	202	234	197
PST (mg/m^{3}N)	Chimenea	821	948	-	-

Tabla No. 3 INFORME DE EMISIONES MEDIDAS

Carga máxima:	**160 ton/h**	**66% combustóleo - 34 % Gas**			
	condición	**máxima carga**		**75% carga**	
Parámetro	Medición	Medición 5	Medición 6	Medición 7	Medición 8
O_2 (%)	Ductos	2.27	2.98	2.26	2.88
CO (ppm)	Ductos	239	43	735	54
O_2 (%)	Chimenea	2.62	3.27	2.42	3.18
CO (ppm)	Chimenea	209	34	696	52
NO_x (ppm)	Chimenea	212	181	197	206
PST (mg/m^3N)	Chimenea	918	-	-	-

Tabla No. 4 INFORME DE EMISIONES NORMALIZADAS

Carga máxima:	**160 ton/h**	**66% combustóleo - 34 % Gas**			
	condición	**máxima carga**		**75% carga**	
Parámetro	Medición	Medición 5	Medición 6	Medición 7	Medición 8
O_2 (%)	Ductos	2.27	2.98	2.26	2.88
CO (ppm)	Ductos				
O_2 (%)	Chimenea	5.00	5.00	5.00	5.00
CO (ppm)	Chimenea	182	31	599	47
NO_x (ppm)	Chimenea	184	163	169	185
PST (mg/m^3N)	Chimenea	799	-	-	-

5

49

Tabla No. 5 INFORME DE EMISIONES MEDIDAS

Carga máxima:	160 ton/h	100% gas			
	condición	máxima carga			
Parámetro	Medición	Medición 9	Medición 10		
O_2 (%)	Ductos	1.32	2.31		
CO (ppm)	Ductos	7,882	150		
O_2 (%)	Chimenea	1.87	2.60		
CO (ppm)	Chimenea	7,491	25		
NO_x (ppm)	Chimenea	152	188		

Tabla No. 6 INFORME DE EMISIONES NORMALIZADAS

Carga máxima:	160 ton/h	100% gas			
	condición	máxima Carga			
Parámetro	Medición	Medición 9	Medición 10		
O_2 (%)	Ductos	1.32	2.31		
CO (ppm)	Ductos				
O_2 (%)	Chimenea	5.0	5.0		
CO (ppm)	Chimenea	6,259	22		
NO_x (ppm)	Chimenea	127	163		

Figura No. 1 Partículas suspendidas totales contra oxígeno medido en ductos, con combustóleo, combustóleo/gas a máxima carga.

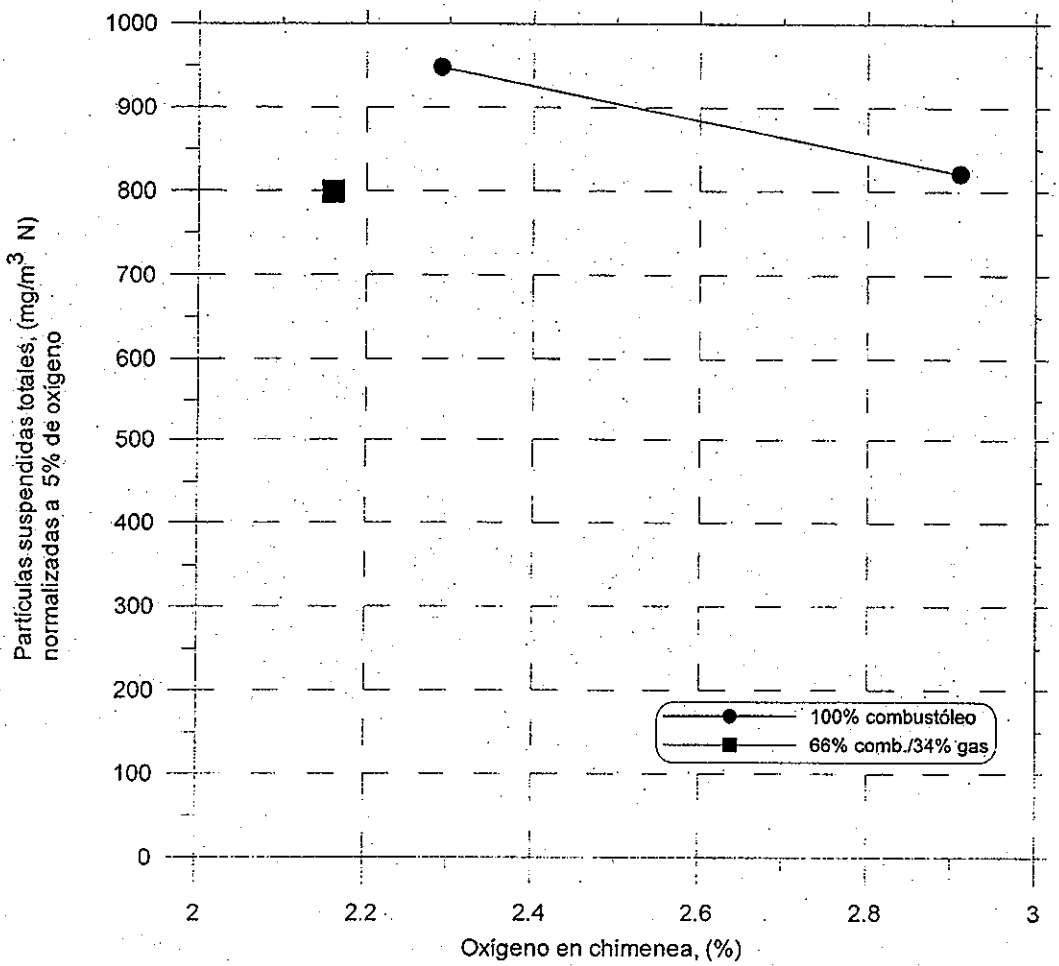

Resultados de las presiones obtenidos en la Refinería de Cd. Madero, Tamaulipas el día 25 de Septiembre de 2000. Prueba con gas combustible.

FECHA: 25/09/2000
CALDERA: MP-B4
OPERACIÓN: GAS COMBUSTIBLE

Presión atrás de la válvula de control = 3.1 bar

Presión cabezal = 1.14 bar (a O_2 normal y a O_2 alto)

Presiones en quemadores (gas) en bar:

No.	1	2	3	4	5	6
O_2 normal	1.08	1.00	1.07	1.oo	0.97	1.09
O_2 alto	1.08	1.00	1.08	1.00	1.oo	1.07

Appendix B

IIE REACH Emissions Test Report
(June 2001)

INSTITUTO DE INVESTIGACIONES ELÉCTRICAS

UNIDAD DE PROCESOS TÉRMICOS

PROYECTO 2521

RESULTADOS PRELIMINARES

EVALUACIÓN DEL COMPORTAMIENTO DE LA CALDERA MP-B-4, DESPUÉS DEL CAMBIO DE QUEMADORES, REFINERÍA "FRANCISCO I. MADERO"

Junio de 2001

Jesús Espinoza Garza
Angel Alberto Méndez Aranda
Adriana Penna García
Amando Martínez Aguilar
Jesús Padilla López

INSTITUTO DE INVESTIGACIONES ELÉCTRICAS

UNIDAD DE PROCESOS TÉRMICOS

RESULTADOS PRELIMINARES
PROGRAMA DE ACTIVIDADES CALDERA MP-B-4 REFINERÍA "FRANCISCO I. MADERO"

OBJETIVO:

Evaluación del sistema de combustión y medición de partículas suspendidas totales para obtener el comportamiento después del cambio de quemadores en la caldera MP-B-4.

CONDICIONES DE PRUEBA:

- **Máquina estable a 140 t/h y 160 t/h de carga**
- **Variación de tipo de combustible (combustóleo, combustóleo/gas y gas)**
- **Operación sin soplado de hollín ni limpieza de quemadores durante las pruebas**

ACTIVIDADES REALIZADAS:

Miércoles 6 Junio 2001

- **Acondicionamiento de puertos de muestreo en ductos (antes PAR's) y en chimenea**
- **Instalación de equipos de medición**
- **Mapeo de ductos**
- **Reunión con personal de la Refinería y de EPT, para establecer el programa de pruebas**
- **Medición 1. Monitoreo de gases de combustión antes de calentadores de aire y chimenea a 160t/h, con 100% de combustóleo a 3.52% en exceso de oxígeno en ductos**

Jueves 7 Junio 2001

- **Medición 2. Monitoreo de gases de combustión antes de calentadores de aire y chimenea a 140t/h de carga, con 100% de combustóleo a 3.45% en exceso de oxígeno en ductos**
- **Medición 3. Monitoreo de gases de combustión antes de calentadores de aire y chimenea a 140t/h, con 66% de combustóleo y 34% de gas a 2.64% en exceso de oxígeno en ductos**
- **Medición 4. Monitoreo de gases de combustión antes de calentadores de aire y chimenea a 160t/h, con 66% de combustóleo y 34% de gas a 2.26% en exceso de oxígeno en ductos**

Viernes 8 Junio 2001

- **Monitoreo de gases de combustión antes de calentadores de aire y chimenea, con gas combustible, a 140 t/h con oxígeno bajo**
- **Monitoreo de gases de combustión antes de calentadores de aire y chimenea, con gas combustible, a 140 t/h con oxígeno alto**

Sábado 9 Junio 2001.

- **Evaluación y obtención de promedios de datos preliminares para entrega al personal de REACH**
- **Procesamiento de muestras en el laboratorio**
- **Evaluación de partículas suspendidas**

Lunes 11 Junio 2001.

- **Elaboración de informe preliminar**

Martes 12 Junio 2001.

- **Entrega de informe**

RESULTADOS.

A continuación se presentan los resultados preliminares de las mediciones para línea base, en los que se incluyen los resultados de emisión de partículas para las pruebas que involucran combustóleo. Los resultados completos y conclusiones se presentarán como parte del informe final del proyecto.

REFINERÍA "FRANCISCO I. MADERO"

Tabla No. 1 INFORME DE EMISIONES MEDIDAS

Carga máxima:	**160 ton/h**	**100% combustóleo**	
Parámetro	condición	**160 Ton/h**	**140 Ton/h**
O_2 (%)	Ductos	3.52	3.45
CO (ppm)	Ductos	5	16
O_2 (%)	Chimenea	3.84	3.95
CO (ppm)	Chimenea	4	16
NO_x (ppm)	Chimenea	198	192
PST (mg/m^{3}N)	Chimenea	209	206
Tgases (°C)	Chimenea	245	248

Tabla No. 2 INFORME DE EMISIONES NORMALIZADAS

Carga máxima: 160 ton/h		**100% combustóleo**	
Parámetro	Condición	**160 ton/h**	**140 ton/h**
O_2 (%)	Ductos	3.52	3.45
CO (ppm)	Ductos	-	-
O_2 (%)	Chimenea	5.0	5.0
CO (ppm)	Chimenea	4	15
NO_x (ppm)	Chimenea	185	180
PST (mg/m^{3}N)	Chimenea	195	193

Tabla No. 3 INFORME DE EMISIONES MEDIDAS

Carga máxima:	**160 ton/h**	**66% combustóleo - 34 % Gas**	
Parámetro	condición	**140 ton/h**	**160 ton/h**
O_2 (%)	Ductos	2.64	2.26
CO (ppm)	Ductos	5	14
O_2 (%)	Chimenea	3.50	3.00
CO (ppm)	Chimenea	5	14
NO_x (ppm)	Chimenea	165	163
PST (mg/m^3N)	Chimenea	171	170
T gases (°C)	Chimenea	236	250

Tabla No. 4 INFORME DE EMISIONES NORMALIZADAS

Carga máxima:	**160 ton/h**	**66% combustóleo - 34 % Gas**	
Parámetro	condición	**140 ton/h**	**160 ton/h**
O_2 (%)	Ductos	2.64	2.26
CO (ppm)	Ductos	-	-
O_2 (%)	Chimenea	5.0	5.0
CO (ppm)	Chimenea	5	12
NO_x (ppm)	Chimenea	151	145
PST (mg/m^3N)	Chimenea	156	151

5

Tabla No. 5 INFORME DE EMISIONES MEDIDAS

Carga máxima:	**140 ton/h**	**100% gas**	
	condición	**máxima carga**	
Parámetro	Medición	Medición 5	Medición 6
O_2 (%)	Ductos	1.40	2.68
CO (ppm)	Ductos	99	0
O_2 (%)	Chimenea	1.94	3.04
CO (ppm)	Chimenea	97	0
NO_x (ppm)	Chimenea	107	101

Tabla No. 6 INFORME DE EMISIONES NORMALIZADAS

Carga máxima:	**140 ton/h**	**100% gas**	
	condición	**máxima carga**	
Parámetro	Medición	Medición 5	Medición 6
O_2 (%)	Ductos	1.40	2.68
CO (ppm)	Ductos	-	-
O_2 (%)	Chimenea	5.0	5.0
CO (ppm)	Chimenea	81	0
NO_x (ppm)	Chimenea	90	90

Figura No. 1 Partículas suspendidas totales contra oxígeno medido en ductos, con combustóleo, combustóleo/gas a máxima carga.

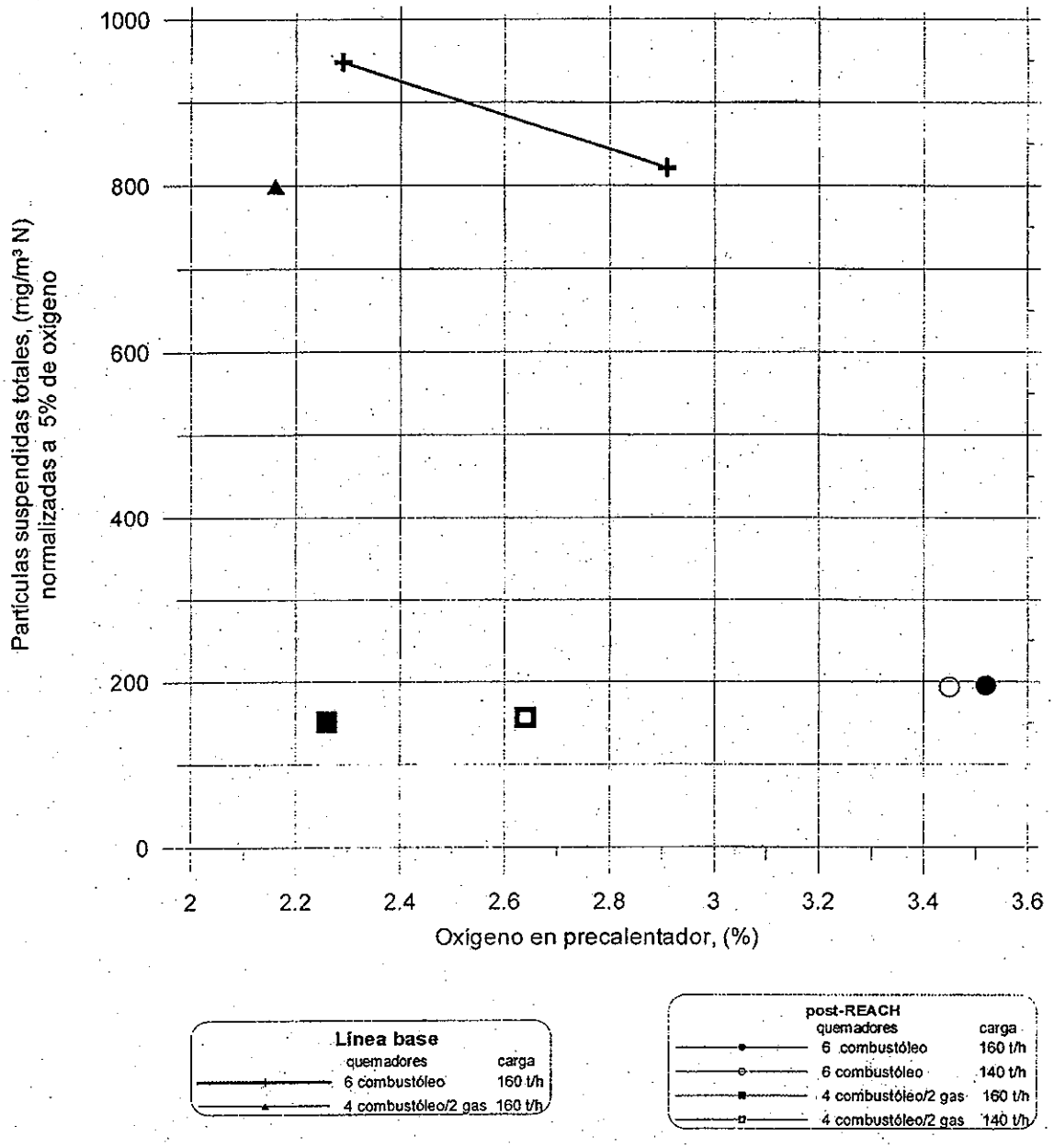

7

60

OBSERVACIONES Y CONCLUSIONES.

1) Se realizó la evaluación del sistema de combustión de la caldera MP-B4, posterior al cambio de quemadores con la tecnología REACH, utilizando tres (3) tipos de combustibles, referidos de acuerdo al número de quemadores en servicio:
   a) 6 quemadores de combustóleo
   b) 4 quemadores de combustóleo y 2 quemadores de gas
   c) 6 quemadores de gas

   Las cargas de prueba fueron: 160 t/h, 160 t/h y 140 t/h, respectivamente como máximo para cada tipo de combustible.

2) El programa de pruebas de aceptación fue presentado por los representantes de la compañía EPT y aceptado de conformidad por el personal de PEMEX y del Instituto de Investigaciones Eléctricas (se anexa copia del mismo), en el cual se planteó la realización de las pruebas con los tres tipos de combustible, operando el sistema de combustión a 2 excesos de oxígeno: normal y mínimo. A solicitud de PEMEX-REFINACIÓN, para cualquier arreglo de quemadores con combustóleo, el exceso de oxígeno mínimo debería ser de un valor aproximado a 2%, con objeto de obtener la máxima eficiencia térmica de la caldera y al mismo tiempo lograr el valor comprometido en la emisión de partículas suspendidas totales (TPM, por sus siglas en inglés) de 150 mg/m^3 normalizadas a 5% en exceso de oxígeno. Sin embargo, lograr el 2% en exceso de oxígeno no fue posible debido a que el control automático del sistema de combustión detecta distorsiones en la flama y no permite la reducción de oxígeno, sin bajar la carga de la caldera. El personal del IIE y de EPT solicitaron al personal de operación de la Planta de Fuerza pasar el sistema de control a modo **manual** con le objeto de disminuir el exceso de aire al mínimo requerido, lo cual no fue autorizado por poner en peligro la producción de vapor para la refinería, ya que las calderas restantes se encontraban operando a mínimas cargas para mantener al máximo la generación de la MP-B4, la cual podría dispararse a causa de la mala detección de flama.

3) Para el arreglo de 6 quemadores de combustóleo (100% combustóleo), la caldera operó a niveles de 3.50% de exceso en oxígeno, medido en ductos antes del precalentador de aire, tanto para 160 t/h como para 140 t/h de vapor, obteniéndose emisiones de TPM de 195 y 193 mg/m^3 N; valores superiores a lo comprometido por la compañía EPT con el cambio de quemadores y para excesos de oxígeno del 2% o menores. Por lo tanto, no se consideró necesaria la medición de TPM a excesos de oxígeno menores al 3.5%, ya que la emisión tendría una tendencia a aumentar al reducir el exceso de aire.

4) Con el arreglo de 4 quemadores de combustóleo y 2 de gas fue posible operar la caldera con excesos de oxígeno cercanos al 2% (2.26% a 160 t/h y 2.64% a 140 t/h), con emisiones de TPM de 151 y 156 mg/m^3 normalizados a 5% de oxígeno, respectivamente.

5) Con 6 quemadores de gas la carga máxima obtenida fue de 140 ton/h de vapor, debido a la baja presión de gas en el cabezal (3.43 kg/cm^2). Para este combustible fue posible reducir el oxígeno en gases de combustión a menos de 2% con emisiones de CO inferiores a 100 ppm.

6) Los representantes EPT propusieron efectuar modificaciones a la tecnología REACH y volver a efectuar las pruebas de combustión en fechas posteriores, previos acuerdos con PEMEX-REFINACIÓN y el IIE.

Appendix C

EPT Boiler Data Sheets – Pre-REACH Baseline Emissions Tests

Madero Boiler MP-B4 Data

Test Number	21-SEPT-00 19:00 hrs NO. 1 (1ST PM TEST)
Test Description	MAX TEST LOAD (89% OF DESIGN MAX), NORMAL O_2, 6 BURNERS ON OIL
Excess O2 (Plant), %	2.1/2.7 (FURNACE OUT/AIR OUT)
Steam Flow, ~~lb~~ kg/s	44.5 (160.4 t/h)
Feedwater Flow, ~~lb~~ kg/s	45.4
Oil Flow, ~~lb~~ kg/s, T/h	3.48 → 12.54 t/h (CALCULATED; AGREES WITH LOCAL T/h READOUT BELOW)
Oil Hdr Press, kg/cm²	MAIN HDR: 9.5 REG. OUTLET: 6.35 CONTROL VALVE OUT: 3.4
o Oil Burner Press, kg/cm²	Brnr 1: 3.0 Brnr 2: 3.0 Brnr 3: 2.4
o Oil Burner Press, kg/cm²	Brnr 4: 2.6 Brnr 5: 2.3 Brnr 6: 2.7
~~Atomiz. Steam, kg/cm²~~	~~Brnr 1:~~ ~~Brnr 2:~~ ~~Brnr 3:~~
~~Atomiz. Steam, kg/cm²~~	~~Brnr 4:~~ ~~Brnr 5:~~ ~~Brnr 6:~~
o Atomiz. Steam, kg/cm²	Upstream Valve: 19 Header: 4.8/4.8
Oil Temp, °C	118.9
Steam/Oil ΔP	1.5
o Gas Hdr Press, kg/cm²	VALVE IN: Ø VALVE OUT: Ø
o Gas. Burn. Press, kg/cm²	Brnr 1: Ø Brnr 2: Ø Brnr 3: Ø
o Gas. Burn. Press, kg/cm²	Brnr 4: Ø Brnr 5: Ø Brnr 6: Ø
SH Steam Temp ~~1~~, °C	383
o OIL FLOW, T/h ~~SH Steam Temp II, °C~~	12.52 (LOCAL METER READOUT) 4,600 LB/HR - BURNER
~~SH Attemp, t/h~~ PLUME APPEARANCE	CONTINUOUS PLUME (CARBON), "HEAVY" MIN. O_2
Windbox Press, mBAR	50.6
Furnace Press, mBAR	41.2 WB-FURN = 9.4 MBAR = 3.8" H_2O
NOx, mg/Nm³ (plant) O_2/CO/NOx (MAX), LL/MBN	
o ATOMIZ. STEAM VALVE POS, % (OUTSIDE)	Page 1 of 4

63

Madero Boiler MP-B4 Data (continued)

Test Number	#1				
AIG 24 SCREEN					
STEAM COIL AIR IN TEMP, °C	40.4				
AIRHEATER AIR IN TEMP, °C	44.9				
AIRHEATER AIR OUT TEMP, °C	221.7 / 191.1				
AIRHEATER GAS IN TEMP, °C	375.6				
AIRHEATER GAS OUT TEMP, °C	242.1				
FD FAN DISCH. PRESS, MBAR	57.4				
AIRHEATER OUT PRESS, MBAR	51.8				
WINDBOX PRESS, MBAR	50.6				
FURNACE PRESS, MBAR	41.2				X/Y
AIRHEATER GAS IN PRESS, MBAR	32.8				
AIRHEATER GAS OUT PRESS, MBAR	33.7				
(FD FAN DAMPER) AIR FLOW, %	70				X/Y
O_2/CO FURNACE OUT, %	2.11 / 005				
O_2 AIRHEATER OUT, %	2.68				
Σ AIR AND VAL. GUIA AIRE, %	89.7 / 89.4				X/Y
TUBE TEMP LEFT, °C	384.	372	378	381	W/X/Y/Z
TUBE TEMP RIGHT, °C	370	378	005	390	W/X/Y/Z
CMC 24 SCREEN					
BOILER MASTER/ V. REAC AIR/V. REAC GAS/O	C, % 89 / 89.2 / 0 / 94-96				X/Y/Z

Madero Boiler MP-B4 Data (continued)

Test Number	1	
COM 24 SCREEN		
COMBUSTOLEO HEADER PRESS, BAR	6.0	
COMBUSTOLEO VALVE POS, %	95.1	
COMBUSTOLEO FLOW, Kg/S	3.48	
COMBUSTOLEO TEMP, °C	118.9	
COMBUSTOLEO HDR BURNER PRESS, BAR	3.04	X/Y
GAS HEADER PRESS, BAR	Ø	
GAS VALVE POSITION, %	Ø	
GAS FLOW, Nm^3/s	Ø	
GAS BURNER HDR PRESS, BAR	Ø	
ATOMIZING STEAM PRESS, BAR	4.5	X/Y
ATOMIZING STEAM VALVE POS, %	42	
AGV 24 SCREEN		
FEEDWATER (ALIM) PRESS, BAR	58.4	
FEEDWATER (ALIM) FLOW, Kg/S	45.4	
STEAM PRESS, BAR	41.6	
STEAM TEMP, °C	382.9	
STEAM FLOW, Kg/S	44.5	
DRUM PRESS, BAR	43.4	X/Y

Madero Boiler MP-B4 Data

Test Number	#2 21-SEPT-00 23:15 HRS		
Test Description	MAX TEST LOAD, REDUCED O_2, 6 BURNERS ON OIL 2ND PM TEST		
Excess O2 (Plant), %	1.5 @ FURNACE OUTLET / 2.2 @ AIRHTR OUTLET		
Steam Flow, ~~kg~~ Kg/s	44.8 Kg/s		
Feedwater Flow, ~~kg~~ Kg/s	45.0		
Oil Flow, t/h, Kg/s	3.49 Kg/s		
Oil Hdr Press, kg/cm²	MAIN HDR:	REG. OUTLET:	CONTROL VALVE OUT:
o Oil Burner Press, kg/cm²	Brnr 1: 3.1	Brnr 2: 3.0	Brnr 3: 2.4
o Oil Burner Press, kg/cm²	Brnr 4: 2.5	Brnr 5: 2.3	Brnr 6: 2.8
~~Atomiz. Steam, kg/cm²~~	~~Brnr 1:~~	~~Brnr 2:~~	~~Brnr 3:~~
~~Atomiz. Steam, kg/cm²~~	~~Brnr 4:~~	~~Brnr 5:~~	~~Brnr 6:~~
o Atomiz. Steam, kg/cm²	Upstream Valve: 19		Header: 4.8
Oil Temp, °C	118.9		
Steam/Oil ΔP	~ 1.8		
o Gas Hdr Press, kg/cm²	VALVE IN:		VALVE OUT:
o ~~Gas. Burn. Press, kg/cm²~~	Brnr 1:	Brnr 2:	Brnr 3:
o ~~Gas. Burn. Press, kg/cm²~~	Brnr 4:	Brnr 5:	Brnr 6:
SH Steam Temp L, °C	381.5		
o ~~SH Steam Temp R, °C~~ OIL FLOW, t/h	12.5		
~~SH Attemp, t/h~~ PLUME APPEARANCE	NIGHT – PLUME VERY VISIBLE FROM REFLECTED LIGHT		
Windbox Press, mBAR	47.7		
Furnace Press, mBAR	38.8 > 8.9 mbar = 3.6" H_2O		
~~NOx, mg/Nm³ (plant)~~ O_2/CO/NOx UNC/LB/MBtu			
o ATOMIZ. STEAM VALVE POS, % (OUTSIDE)	~ 40%		

Madero Boiler MP-B4 Data (continued)

Test Number	#2	
AIG 24 SCREEN		
STEAM COIL AIR IN TEMP, °C	39.7	
AIRHEATER AIR IN TEMP, °C	44.3	
AIRHEATER AIR OUT TEMP, °C	220.9/189.7	
AIRHEATER GAS IN TEMP, °C	372.0	
AIRHEATER GAS OUT TEMP, °C	239.1	
FD FAN DISCH. PRESS, MBAR	54.0	
AIRHEATER OUT PRESS, MBAR	48.7	
WINDBOX PRESS, MBAR	47.4	
FURNACE PRESS, MBAR	38.7	X/Y
AIRHEATER GAS IN PRESS, MBAR	30.8	
AIRHEATER GAS OUT PRESS, MBAR	31.7	
AIR FLOW, %	57.	X/Y
O_2/CO FURNACE OUT, %	1.45/ 002	
O_2 AIRHEATER OUT, %	2.24	
Σ AIR AND VAL. GUIA AIRE, %	87.3 / 87.0	X/Y
TUBE TEMP LEFT, °C	382 369 374 377	W/X/Y/Z
TUBE TEMP RIGHT, °C	368 380 — 389	W/X/Y/Z
CMC 24 SCREEN		
BOILER MASTER/ V. REAC AIR/V. REAC GAS/O2, %	89.4/87.1/0/95.2	X/Y/Z

Madero Boiler MP-B4 Data (continued)

Test Number	# 2	
COM 24 SCREEN		
COMBUSTOLEO HEADER PRESS, BAR	5.9	
COMBUSTOLEO VALVE POS, %	95.1 VAL GUIA / 75 % VALVE POS	
COMBUSTOLEO FLOW, Kg/S	3.49	
COMBUSTOLEO TEMP, °C	118.9	
COMBUSTOLEO HDR BURNER PRESS, BAR	3.02	X/Y
GAS HEADER PRESS, BAR	X	
GAS VALVE POSITION, %	X	
GAS FLOW, Nm^3/s	X	
GAS BURNER HDR PRESS, BAR	X	
ATOMIZING STEAM PRESS, BAR	4.5	X/Y
ATOMIZING STEAM VALVE POS, %	41.9	
AGV 24 SCREEN		
FEEDWATER (ALIM) PRESS, BAR	58.0	
FEEDWATER (ALIM) FLOW, Kg/S	45.0	
STEAM PRESS, BAR	41.4	
STEAM TEMP, °C	382.0	
STEAM FLOW, Kg/S	44.7	
DRUM PRESS, BAR	43.3/43.7	X/Y

Friday
22-Sept-00

Madero Boiler MP-B4 Data

Test Number	#3 BOILER TRIP @ 11.10 am
Test Description	NORMAL LOAD; NORMAL O2 6 BURNERS ON OIL (75% LOAD) GAS COMPOSITION DATA ONLY - NO PM
Excess O2 (Plant), %	2.97 (Stack)
Steam Flow, ~~t/h~~ kg/s	38 (~137 t/h)
Feedwater Flow, ~~t/h~~ kg/s	38.7
Oil Flow, t/h, kg/s	2.98
Oil Hdr Press, kg/cm²	MAIN HDR: 9.5 REG. OUTLET: 6.6 CONTROL VALVE OUT: 2.7
o Oil Burner Press, kg/cm²	Brnr 1: 2.5 Brnr 2: 2.7 Brnr 3: 2.3
o Oil Burner Press, kg/cm²	Brnr 4: 2.1 Brnr 5: 1.85 Brnr 6: 2.2
~~Atomiz. Steam, kg/cm²~~	~~Brnr 1:~~ ~~Brnr 2:~~ ~~Brnr 3:~~
~~Atomiz. Steam, kg/cm²~~	~~Brnr 4:~~ ~~Brnr 5:~~ ~~Brnr 6:~~
o Atomiz. Steam, kg/cm²	Upstream Valve: 19 Header: 26% of 16 Bar 4.2
Oil Temp, °C	116.5
Steam/Oil ΔP	~1.5 Bar (hidden for header)
o ~~Gas Hdr Press, kg/cm²~~	VALVE IN: VALVE OUT:
o ~~Gas. Burn. Press, kg/cm²~~	Brnr 1: Brnr 2: Brnr 3:
o ~~Gas. Burn. Press, kg/cm²~~	Brnr 4: Brnr 5: Brnr 6:
SH Steam Temp ~~R~~, °C	382.4
o ~~SH Steam Temp R, °C~~ OIL FLOW, t/h	10.7 (FLOW METER LOCAL)
~~SH Attemp, t/h~~ PLUME APPEARANCE	LIGHT CONTINUOUS BLACK PUFFS
Windbox Press, mBar	37
Furnace Press, mBar	30
~~NOx, mg/Nm³ (plant)~~ O2/CO/NOx UNC/ LEC Lb/MBtu	3.2 / <10 / 254 /
o ATOMIZ. STEAM VALVE POS, % (OUTSIDE)	35-40

Page 1 of 4

69

Madero Boiler MP-B4 Data (continued)

Test Number	#3	
A/G 24 SCREEN		
STEAM COIL AIR IN TEMP, °C	40.8	
AIRHEATER AIR IN TEMP, °C	45.3	
AIRHEATER AIR OUT TEMP, °C	212.9/185.3 ← TC's on each side of Air htr	
AIRHEATER GAS IN TEMP, °C	357	
AIRHEATER GAS OUT TEMP, °C	226.6	
FD FAN DISCH. PRESS, MBAR	41.5	
AIRHEATER OUT PRESS, MBAR	37.6	
WINDBOX PRESS, MBAR	36.5 – 37.2	
FURNACE PRESS, MBAR	30	X/Y
AIRHEATER GAS IN PRESS, MBAR	23.6	
AIRHEATER GAS OUT PRESS, MBAR	24.8	
FD FAN DMPR ~~AIRFLOW~~, %	37	X/Y
O_2/CO FURNACE OUT, %	2.35 / —	
O_2 AIRHEATER OUT, %	2.97	
Σ AIR AND VAL. GUIA AIRE, %	77.8 / 77.9 38 % FD FAN DAMPER	X/Y
TUBE TEMP LEFT, °C	384 372 375 376	W/X/Y/Z
TUBE TEMP RIGHT, °C	367 376 — 380	W/X/Y/Z
CMC 24 SCREEN		
BOILER MASTER/ REAC AIR/V, REAC GAS/O2, %	76 / 78 / — / 81.5	X/Y/Z

Madero Boiler MP-B4 Data (continued)

Test Number	#3	
COM 24 SCREEN		
COMBUSTOLEO HEADER PRESS, BAR	6.2	
COMBUSTOLEO VALVE POS, %	66	
COMBUSTOLEO FLOW, Kg/S	2.98 / 81.4 %	
COMBUSTOLEO TEMP, °C	116.5	
COMBUSTOLEO HDR BURNER PRESS, BAR	2.41/2.37	X/Y
GAS HEADER PRESS, BAR		
GAS VALVE POSITION, %		
GAS FLOW, Nm^3/s		
GAS BURNER HDR PRESS, BAR		
ATOMIZING STEAM PRESS, BAR	4/3.8	X/Y
ATOMIZING STEAM VALVE POS, %	40.0	
AGV 24 SCREEN		
FEEDWATER (ALIM) PRESS, BAR	57.8	
FEEDWATER (ALIM) FLOW, Kg/S	38.7	
STEAM PRESS, BAR	40.9	
STEAM TEMP, °C	382.4	
STEAM FLOW, Kg/S	38-38.4 (136.8 - 138.2 t/h)	X/Y
DRUM PRESS, BAR	42.2	

22-Sept-04

Madero Boiler MP-B4 Data

Test Number	#4
Test Description	NORMAL LOAD, 6 BURNERS ON OIL LOWEST O2 ALLOWED BY OPERATORS DUE TO FLAME SCANNER STABILITY * FLUE GAS CONCENTRATIONS; NO PM TEST
Excess O2 (Plant), %	1.97 @ STACK
Steam Flow, ~~t/h~~ kg/s	39 (140 T/h)
Feedwater Flow, ~~t/h~~ kg/s	39.5
Oil Flow, t/h, kg/s	2.98 "B4-PC-20C"
Oil Hdr Press, kg/cm²	MAIN HDR: 9.4 (REG.) OUTLET: 6.5 CONTROL VALVE OUT: 2.7
o Oil Burner Press, kg/cm²	Brnr 1: 2.7 Brnr 2: 2.7 Brnr 3: 2.35
o Oil Burner Press, kg/cm²	Brnr 4: 2.05 Brnr 5: 1.85 Brnr 6: 2.2
~~Atomiz. Steam, kg/cm²~~	~~Brnr 1:~~ ~~Brnr 2:~~ ~~Brnr 3:~~
~~Atomiz. Steam, kg/cm²~~	~~Brnr 4:~~ ~~Brnr 5:~~ ~~Brnr 6:~~
o Atomiz. Steam, kg/cm²	Upstream Valve: 19 Header: 26% of 16 BAR
Oil Temp, °C	116
Steam/Oil ΔP	1.5
o ~~Gas Hdr Press, kg/cm²~~	VALVE IN: VALVE OUT:
o ~~Gas. Burn. Press, kg/cm²~~	Brnr 1: Brnr 2: Brnr 3:
o ~~Gas. Burn. Press, kg/cm²~~	Brnr 4: Brnr 5: Brnr 6:
SH Steam Temp L, °C	379.2
o ~~SH Steam Temp R, °C~~ OIL FLOW, T/H	10.7 @ LOCAL METER READOUT
~~SH Attemp, t/h~~ PLUME APPEARANCE	LIGHT-MODERATE BROWN STEADY
Windbox Press, mBAR	32.9
Furnace Press, mBAR	26.7
~~NOx, mg/Nm³ (plant)~~ O2/CO/NOx/UHC/PM/M3	
o ATOMIZ. STEAM VALVE POS, % (OUTSIDE)	~40% * BURNER #1 FLAME FILLING THROAT, SOME MINOR FLICKERING @ SKIRT

NOTE: ALL 6 SIEMENS "FLAMA INTENSIDAD" LOCAL READOUTS STEADY 100%

72

Madero Boiler MP-B4 Data (continued)

Test Number	4				
A/G 24 SCREEN					
STEAM COIL AIR IN TEMP, °C	41.4				
AIRHEATER AIR IN TEMP, °C	45.8				
AIRHEATER AIR OUT TEMP, °C	211.8/184.4				
AIRHEATER GAS IN TEMP, °C	350.1				
AIRHEATER GAS OUT TEMP, °C	222.3				
FD FAN DISCH. PRESS, MBAR	36.8				
AIRHEATER OUT PRESS, MBAR	33.7				
WINDBOX PRESS, MBAR	32.9				
FURNACE PRESS, MBAR	26.7				X/Y
AIRHEATER GAS IN PRESS, MBAR	20.9				
AIRHEATER GAS OUT PRESS, MBAR	21.6				
FD FAN DAMPER ~~AIR FLOW~~, %	31				X/Y
O_2/CO FURNACE OUT, %	1.27/005				
O_2 AIRHEATER OUT, %	1.97				
Σ AIR AND VAL. GUIA AIRE, %	73.7 / 73.7				X/Y
TUBE TEMP LEFT, °C	379	367	373	376	W/X/Y/Z
TUBE TEMP RIGHT, °C	366	373	—	373	W/X/Y/Z
CMC 24 SCREEN					
BOILER MASTER/ REAC AIR/V, REAC GAS/O2, %	78.1/74/0/81.7				X/Y/Z

Madero Boiler MP-B4 Data (continued)

Test Number	4	
COM 24 SCREEN		
COMBUSTOLEO HEADER PRESS, BAR	6.2	
COMBUSTOLEO VALVE POS. %	66	
COMBUSTOLEO FLOW, kg/s, %	2.98 / 81.6	
COMBUSTOLEO TEMP, °C	116	
COMBUSTOLEO HDR BURNER PRESS, BAR	2.37 / 2.4	X/Y
GAS HEADER PRESS, BAR	—	
GAS VALVE POSITION, %	—	
GAS FLOW, Nm^3/s	—	
GAS BURNER HDR PRESS, BAR	—	
ATOMIZING STEAM PRESS, BAR	3.9 / 3.8	X/Y
ATOMIZING STEAM VALVE POS, %	40	
AGV 24 SCREEN		
FEEDWATER (ACIM) PRESS, BAR	55.8	
FEEDWATER (ACIM) FLOW, kg/s	39.5	
STEAM PRESS, BAR	40.0	
STEAM TEMP, °C	379.2	
STEAM FLOW, kg/s	38.8 – 39.0	
DRUM PRESS, BAR	41.3	X/Y

Madero Boiler MP-B4 Data

Test Number	#5 22-SEPT-00 16:30
Test Description	BURNERS # 1 & 2 — FIRING GAS BURNERS # 3, 4-6 — FIRING OIL NORMAL MAX LOAD NORMAL EXCESS O2
Excess O2 (Plant), %	2.18
Steam Flow, ~~t/h~~ kg/s	45.3 (163 t/h)
Feedwater Flow, ~~t/h~~ kg/s	45
Oil Flow, t/h, kg/s	2.2
Oil Hdr Press, kg/cm²	MAIN HDR: 9.8 REG. OUTLET: 6.8 CONTROL VALVE OUT: 2.9
o Oil Burner Press, kg/cm²	Brnr 1: — Brnr 2: — Brnr 3: 2.35
o Oil Burner Press, kg/cm²	Brnr 4: 2.2 Brnr 5: 2.0 Brnr 6: 2.1
~~Atomiz. Steam, kg/cm²~~	~~Brnr 1:~~ ~~Brnr 2:~~ ~~Brnr 3:~~
~~Atomiz. Steam, kg/cm²~~	~~Brnr 4:~~ ~~Brnr 5:~~ ~~Brnr 6:~~
o Atomiz. Steam, kg/cm²	Upstream Valve: 19.0 Header: 27% of 16 bar
Oil Temp, °C	118.4
Steam/Oil ΔP	
o Gas Hdr Press, kg/cm²	VALVE IN: 4.4 VALVE OUT: 1.0
o Gas. Burn. Press, kg/cm²	Brnr 1: 0.75 Brnr 2: 0.75 Brnr 3: —
o Gas. Burn. Press, kg/cm²	Brnr 4: — Brnr 5: — Brnr 6: —
SH Steam Temp ~~L~~, °C	381
o ~~SH Steam Temp R, °C~~ OIL FLOW, t/h	7.78
~~SH Attemp, t/h~~ PLUME APPEARANCE	See p. 3
Windbox Press, mBar	49
Furnace Press, mBar	39
NOx, mg/Nm³ (plant) ~~O2/kg/NOx kg/h/MBTU~~	
o ATOMIZ. STEAM VALVE POS, % (OUTSIDE)	35 GAS FLAMES yellow, SMOKEY AT TIMES

25

Madero Boiler MP-B4 Data (continued)

Test Number	5	
AIG 24 SCREEN		
STEAM COIL AIR IN TEMP, °C	41.0	
AIRHEATER AIR IN TEMP, °C	45.6	
AIRHEATER AIR OUT TEMP, °C	223.9/190.4	
AIRHEATER GAS IN TEMP, °C	370.7	
AIRHEATER GAS OUT TEMP, °C	240.1	
FD FAN DISCH. PRESS, MBAR	55.8	
AIRHEATER OUT PRESS, MBAR	50.2	
WINDBOX PRESS, MBAR	49.1	
FURNACE PRESS, MBAR	38.7	X/Y
AIRHEATER GAS IN PRESS, MBAR	30.8	
AIRHEATER GAS OUT PRESS, MBAR	32.0	
FD Fan DMPR POS AIR FLOW, %	69	X/Y
O_2/CO FURNACE OUT, %	2.06/—	
O_2 AIRHEATER OUT, %	2.18	
Σ AIR AND VAL. GUIA AIRE, %	86.0/86.5	X/Y
TUBE TEMP LEFT, °C	382 366 373 373	W/X/Y/Z
TUBE TEMP RIGHT, °C	370 382 — 407	W/X/Y/Z
CMC 24 SCREEN		
BOILER MASTER/ REAC AIR/V, REAC GAS/G C, %	90.2/86.3/29.7/59.3	X/Y/Z

Madero Boiler MP-B4 Data (continued)

Test Number	5	
COM 24 SCREEN		
COMBUSTOLEO HEADER PRESS, BAR	6.4	
COMBUSTOLEO VALVE POS. %	53	
COMBUSTOLEO FLOW, kg/s	2.17 (59.2%)	
COMBUSTOLEO TEMP, °C	118.4	
COMBUSTOLEO HDR BURNER PRESS, BAR	2.55/2.58	X/Y
GAS HEADER PRESS, BAR	3.7	
GAS VALVE POSITION, %	25	
GAS FLOW, Nm^3/s	1.24 Nm^3/s (29.6%)	
GAS BURNER HDR PRESS, BAR	0.92/0.91	
ATOMIZING STEAM PRESS, BAR	4.1/4.0	X/Y
ATOMIZING STEAM VALVE POS, %	39	
AGV 24 SCREEN		
FEEDWATER (ACIM) PRESS, BAR	57.6 – 58.2	
FEEDWATER (ACIM) FLOW, kg/s	44.9 – 45.5	
STEAM PRESS, BAR	44.7 – 42.3	
STEAM TEMP, °C	381.6 – 379.7	
STEAM FLOW, kg/s	45.0 – 45.6	
DRUM PRESS, BAR	44.2 – 42.3	X/Y

Burner #3 visible thru 2nd-pass → well attached & filling throat. Smoke wisping back to firing wall at burners 1 & 2. Stack light–mod black puffs continuous. Burners 1 & 2 transparent except for periodic yellow streaking.

Madero Boiler MP-B4 Data

Test Number	SEPT. 22, '00 7:00 PM		NO. 6
Test Description	BURNERS 1 & 2 - FIRING GAS, BURNERS 3, 4-6 FIRING OIL NORMAL MAX LOAD MAXIMUM EXCESS O_2, NO PM TESTS		
Excess O2 (Plant), %			
Steam Flow, ~~t/h~~ kg/s	45.3 (163.1 T/h)		
Feedwater Flow, ~~t/h~~ kg/s	45.7		
Oil Flow, t/h, kg/s			
Oil Hdr Press, kg/cm²	MAIN HDR: 9.8	REG. OUTLET: 6.8	CONTROL VALVE OUT: 2.9
o Oil Burner Press, kg/cm²	Brnr 1: —	Brnr 2: —	Brnr 3: 2.35
o Oil Burner Press, kg/cm²	Brnr 4: 2.2	Brnr 5: 2.0	Brnr 6: 2.15
~~Atomiz. Steam, kg/cm²~~	~~Brnr 1:~~	~~Brnr 2:~~	Brnr 3:
~~Atomiz. Steam, kg/cm²~~	~~Brnr 4:~~	~~Brnr 5:~~	Brnr 6:
o Atomiz. Steam, kg/cm²	Upstream Valve: 19		Header: 27% @ 16 bar
Oil Temp, °C			
Steam/Oil ΔP			
o Gas Hdr Press, kg/cm²	VALVE IN: 4.5		VALVE OUT: 1.0
o Gas. Burn. Press, kg/cm²	Brnr 1: 0.75	Brnr 2: 0.75	Brnr 3: —
o Gas. Burn. Press, kg/cm²	Brnr 4: —	Brnr 5: —	Brnr 6: —
SH Steam Temp L, °C			
o OIL FLOW, T/h ~~SH Steam Temp R, °C~~	7.77		
~~SH Attemp. t/h~~ PLUME APPEARANCE	VISIBLE CARBON PLUME - CONTINUOUS PUFFING RUN at higher O_2!		
Windbox Press, mBAR			
Furnace Press, mBAR			
NOx, mg/Nm³ (plant) ETC. O_2/CO/NOx/UNC/L/MRU			
o ATOMIZ. STEAM VALVE POS, % (OUTSIDE)			

78

Madero Boiler MP-B4 Data (continued)

Test Number	#6	
A/G 24 SCREEN		
STEAM COIL AIR IN TEMP, °C	40.8	
AIRHEATER AIR IN TEMP, °C	45.0	
AIRHEATER AIR OUT TEMP, °C	223.3/190.7	
AIRHEATER GAS IN TEMP, °C	373.0	
AIRHEATER GAS OUT TEMP, °C	241.9	
FD FAN DISCH PRESS, MBAR	58.9	
AIRHEATER OUT PRESS, MBAR	52.9	
WINDBOX PRESS, MBAR	51.6	
FURNACE PRESS, MBAR	40.9	X/Y
AIRHEATER GAS IN PRESS, MBAR	32.7	
AIRHEATER GAS OUT PRESS, MBAR	33.5	
FD FAN DAMPER ~~AIR FLOW, %~~ %	83.3	X/Y
O_2/CO FURNACE OUT, %	2.53/—	
O_2 AIRHEATER OUT, %	2.57	
Σ AIR AND VAL. GUIA AIRE, %	88.7/86.5	X/Y
TUBE TEMP LEFT, °C	382 366 373 373	W/X/Y/Z
TUBE TEMP RIGHT, °C	369 381 — 406	W/X/Y/Z
CMC 24 SCREEN		
BOILER MASTER/ REAC AIR/N, REAC GAS/OK, %	90.4/88.5/29.4/59.1	X/Y/Z

TEST CASETA

BCR 4

B A

BCR 3

79

Madero Boiler MP-B4 Data (continued)

Test Number	#6	
COM 24 SCREEN		
COMBUSTOLEO HEADER PRESS, BAR	6.4	
COMBUSTOLEO VALVE POS, %	53	
COMBUSTOLEO FLOW, kg/s	2.16 (59.2%)	
COMBUSTOLEO TEMP, °C	118.9	
COMBUSTOLEO HDR BURNER PRESS, BAR	2.55/2.58	X/Y
GAS HEADER PRESS, BAR	4.2	
GAS VALVE POSITION, %	23	
GAS FLOW, Nm^3/s	1.25 (29.6%)	
GAS BURNER HDR PRESS, BAR	0.90	
ATOMIZING STEAM PRESS, BAR	4.1/4.0	X/Y
ATOMIZING STEAM VALVE POS, %	39	
AGV 24 SCREEN		
FEEDWATER (ACIM) PRESS, BAR	56.9 –	
FEEDWATER (ACIM) FLOW, kg/s	45.4 – 46.0	
STEAM PRESS, BAR	41.1	
STEAM TEMP, °C	379.4	
STEAM FLOW, kg/s	45.1 – 45.5	
DRUM PRESS, BAR	42.9	X/Y

SO_2

Madero Boiler MP-B4 Data

Test Number	7 23-SEPT-00 11:55
Test Description	NORMAL LOAD BURNERS 1,2 → GAS / 3-6 → OIL LOW O2 (CO-LIMITED)
Excess O2 (Plant), %	~1.8
Steam Flow, ~~kg~~ kg/s	39 (140.6 t/h)
Feedwater Flow, ~~kg~~ kg/s	39.3
Oil Flow, t/h, kg/s	1.86 kg/s (6.7 t/h)
Oil Hdr Press, kg/cm²	MAIN HDR: 9.8 REG. OUTLET: CONTROL VALVE OUT:
Oil Burner Press, kg/cm²	Brnr 1: — Brnr 2: — Brnr 3: 2.3
Oil Burner Press, kg/cm²	Brnr 4: 1.85 Brnr 5: 1.65 Brnr 6: 2.0
ATOM ST VV / PURGE ST VV Atomiz. Steam, kg/cm²	~~Brnr 1:~~ cl / cl Brnr 2: cl / cl Brnr 3: op / op } VISUALLY CONFIRM
ATOM ST VV / PURGE ST VV Atomiz. Steam, kg/cm²	Brnr 4: op / op Brnr 5: op / op Brnr 6: op / op }
Atomiz. Steam, kg/cm²	Upstream Valve: 19 Header: 24% OF 16 BAR 3.8
Oil Temp, °C	118.4
Steam/Oil ΔP	~1.8 ← GAS VV 80% OPEN
Gas Hdr Press, kg/cm²	VALVE IN: 5.2 VALVE OUT: 0.75
Gas. Burn. Press, kg/cm²	Brnr 1: 6.2 Brnr 2: 5.8 Brnr 3: —
Gas. Burn. Press, kg/cm²	Brnr 4: — Brnr 5: — Brnr 6: —
SH Steam Temp L, °C	379.6 (715 F)
OIL FLOW, T/H ~~SH Steam Temp R, °C~~	6.61 - 6.71
~~SH Attemp, t/h~~ PLUME APPEARANCE	CONTINUOUS BROWN/BLACK MODERATE INTENSITY (HEAVY BROWN ON O2 DIPS)
Windbox Press, mBAR	35.1
Furnace Press, mBAR	27.8
NOx, mg/Nm³ (plant) ~~O2/CO/NOx UNK/LB/MBTU~~ EIG	379.6
ATOMIZ. STEAM VALVE POS, % (OUTSIDE)	~35 %

81

Madero Boiler MP-B4 Data (continued)

Test Number	7	
AIG 24 SCREEN		
STEAM COIL AIR IN TEMP, °C	41.4	
AIRHEATER AIR IN TEMP, °C	45.9	
AIRHEATER AIR OUT TEMP, °C	215/185	
AIRHEATER GAS IN TEMP, °C	350.6	
AIRHEATER GAS OUT TEMP, °C	224.2	
FD FAN DISCH. PRESS, MBAR	38.7 – 39.0	
AIRHEATER OUT PRESS, MBAR	35.7	
WINDBOX PRESS, MBAR	35.1	
FURNACE PRESS, MBAR	27.8	X/Y
AIRHEATER GAS IN PRESS, MBAR	21.8	
AIRHEATER GAS OUT PRESS, MBAR	22.7	
FD FAN DMPR ~~AIR FLOW, %~~	38.6 NOTE: ONE SET OF FAN VANES WELDED INTO ~40% OPEN POS. HS PREPARATION FOR REPAIRS TODAY	X/Y
O_2/CO FURNACE OUT, %	1.75/– (–1.86) ← O2 DIPS TO ~1.6	
O_2 AIRHEATER OUT, %	1.84	
Σ AIR AND VAL. GUIA AIRE, %	74.5/74.1	X/Y
TUBE TEMP LEFT, °C	379 363 368 370	W/X/Y/Z
TUBE TEMP RIGHT, °C	369 383 — 402	W/X/Y/Z
CMC 24 SCREEN		
BOILER MASTER/ V. REAC AIR/V. REAC GAS/O2, %	78.0/74.3/25.4/50.5	X/Y/Z

Madero Boiler MP-B4 Data (continued)

Test Number	7	
COM 24 SCREEN		
COMBUSTOLEO HEADER PRESS, BAR	6.5	
COMBUSTOLEO VALVE POS, %	44-43	
COMBUSTOLEO FLOW, Kg/S	1.86	
COMBUSTOLEO TEMP, °C	118.4	
COMBUSTOLEO HDR BURNER PRESS, BAR	2.01/2.05	X/Y
GAS HEADER PRESS, BAR	4.7	
GAS VALVE POSITION, %	20-20.5	
GAS FLOW, Nm^3/s	1.07 (25.3)	
GAS BURNER HDR PRESS, BAR	0.69	
ATOMIZING STEAM PRESS, BAR	3.6/3.5	X/Y
ATOMIZING STEAM VALVE POS, %	37	
AGV 24 SCREEN		
FEEDWATER (ALIM) PRESS, BAR	57.5	
FEEDWATER (ALIM) FLOW, Kg/S	39.3	
STEAM PRESS, BAR	41.6	
STEAM TEMP, °C	379.6	
STEAM FLOW, Kg/S	39.1-38.9	
DRUM PRESS, BAR	43.0	X/Y

Madero Boiler MP-B4 Data

Test Number	8 23- ~~SOOT~~ - CO 13:00 MAC
Test Description	NORMAL LOAD 1,2 BURNERS → GAS 3-6 BURNERS → OIL NORMAL EXCESS O2
Excess O2 (Plant), %	2.4
Steam Flow, ~~t/h~~ Kg/s	39.2 (141.3 t/h)
Feedwater Flow, ~~t/h~~ Kg/s	~40
Oil Flow, t/h, Kg/s	1.85 Kg/s (6.67 t/h) ← OIL VV ~40% OPEN
Oil Hdr Press, kg/cm²	MAIN HDR: 9.8 REG. OUTLET: 6.9 CONTROL VALVE OUT: 2.6
o Oil Burner Press, kg/cm²	Brnr 1: — Brnr 2: — Brnr 3: 2.3
o Oil Burner Press, kg/cm²	Brnr 4: 1.8 Brnr 5: 1.65 Brnr 6: 1.9
~~Atomiz. Steam, kg/cm²~~	~~Brnr 1:~~ Brnr 2: Brnr 3:
~~Atomiz. Steam, kg/cm²~~	~~Brnr 4:~~ Brnr 5: Brnr 6:
o Atomiz. Steam, kg/cm²	Upstream Valve: 19 Header: 24% & 16 BAR
Oil Temp, °C	118.6
Steam/Oil ΔP	379.5 ← gas regulating vv 80% open & OR CLOSED
o Gas Hdr Press, kg/cm²	VALVE IN: 4.6 VALVE OUT: 0.75
o Gas. Burn. Press, kg/cm²	Brnr 1: 6.2 Brnr 2: 5.8 Brnr 3: —
o Gas. Burn. Press, kg/cm²	Brnr 4: — Brnr 5: — Brnr 6: —
SH Steam Temp, °C	
o ~~SH Steam Temp P, °C~~ OIL FLOW, T/H	6.61-6.76
~~SH Attemp, t/h~~ PLUME APPEARANCE	PULSING LIGHT - MODERATE BLACK
Windbox Press, mBAR	38.4
Furnace Press, mBAR	30.0
NOx, mg/Nm³ (plant) ~~O2/CO/N~~ UNCORR/LB/MBTU	
o ATOMIZ. STEAM VALVE POS, % (OUTSIDE)	~35%

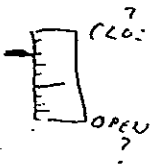

Madero Boiler MP-B4 Data (continued)

Test Number	8				
A16.24 SCREEN					
STEAM COIL AIR IN TEMP, °C	41.7				
AIRHEATER AIR IN TEMP, °C	46.0				
AIRHEATER AIR OUT TEMP, °C	215.6/185.0				
AIRHEATER GAS IN TEMP, °C	354				
AIRHEATER GAS OUT TEMP, °C	227				
FD FAN DISCH. PRESS, MBAR	42.5				
AIRHEATER OUT PRESS, MBAR	38.9				
WINDBOX PRESS, MBAR	38.4				
FURNACE PRESS, MBAR	30.0				X/Y
AIRHEATER GAS IN PRESS, MBAR	23.8				
AIRHEATER GAS OUT PRESS, MBAR	24.5				
FD FAN CONTROL ~~AIR FLOW~~, %	44				X/Y
O_2/CO FURNACE OUT, %	2.38-2.43/—				
O_2 AIRHEATER OUT, %	2.50				
Σ AIR AND VAL. GUIA AIRE, %	77.2/	74.1			X/Y
TUBE TEMP LEFT, °C	379	364	369	370	W/X/Y/Z
TUBE TEMP RIGHT, °C	367	382	—	406	W/X/Y/Z
CMC 24 SCREEN					
BOILER MASTER/ REAC AIR/V, REAC GAS/OLC, %	78.2/77.4/	25.3/	58.5/		X/Y/Z

Madero Boiler MP-B4 Data (continued)

Test Number	8	
COM 24 SCREEN		
COMBUSTOLEO HEADER PRESS, BAR	4.5	
COMBUSTOLEO VALVE POS, %	44 %	
COMBUSTOLEO FLOW, Kg/S	1.85 (50.7%)	
COMBUSTOLEO TEMP, °C	118.6	
COMBUSTOLEO HDR BURNER PRESS, BAR	1.99/2.01	X/Y
GAS HEADER PRESS, BAR	4.2	
GAS VALVE POSITION, %	21.5 %	
GAS FLOW, Nm^3/s	1.06	
GAS BURNER HDR PRESS, BAR	0.71/0.70	
ATOMIZING STEAM PRESS, BAR	3.6/3.4	X/Y
ATOMIZING STEAM VALVE POS, %	36.5 %	
AGV 24 SCREEN		
FEEDWATER (ACIM) PRESS, BAR	57.2	
FEEDWATER (ACIM) FLOW, Kg/S	41.6 - 38.8	
STEAM PRESS, BAR	41.6	
STEAM TEMP, °C	379.5	
STEAM FLOW, Kg/S	39.0 - 39.4	
DRUM PRESS, BAR	43.0	X/Y

Appendix D

EPT Boiler Data Sheets –REACH Emissions Tests

Madero Boiler MP-B4 Data

Test Number/Date/Time	1-PRE-PM 6/6/01 19:22 hr
Test Description	V-JETS, MAX LOAD, ABIS, OIL V-JETS ORIENTED SIDEWAYS DATA DURING THE GAS TRAVERSE
Excess O2 (Plant), %	Furnace Out: 3.12 AH Out: 3.01
Steam Flow, kg/sec	43.8-44.3 t/h (metric): 158-160
Feedwater Flow, kg/sec	
Oil Flow, kg/sec	3.57 t/h (metric):
Oil Hdr Press, kg/cm²	Main Hdr: 11.0 Regulator Outlet: 8.3 Control Valve Outlet: 7.0
Oil Burner Press, kg/cm²	Brnr 1: Brnr 2: 7.0 Brnr 3:
Oil Burner Press, kg/cm²	Brnr 4: Brnr 5: Brnr 6:
Atomiz. Steam, kg/cm²	Brnr 1: Brnr 2: 8.6 (a = +0.4) Brnr 3:
Atomiz. Steam, kg/cm²	Brnr 4: Brnr 5: Brnr 6:
Atomiz. Steam, kg/cm²	Upstream of Burners: 9.4 Header (% of 16): (barg):
Oil Temp, °C	116.9
Steam/Oil ΔP (DCS)	
Gas Hdr Press, kg/cm²	Valve In: 6.2 Valve Out: – Valve % Open: –
Gas. Burn. Press, kg/cm²	Brnr 1: Brnr 2: Brnr 3:
Gas. Burn. Press, kg/cm²	Brnr 4: Brnr 5: Brnr 6:
SH Steam Temp, °C	382
Oil Flow, t/h (local meter)	12.9 (2.15/burner) lb/h-burner: 4,730
Plume Appearance	SO3 with periodic brownish coloring. Good mid oz.
Windbox Press, mbar	56.2
Furnace Press, mbar	48.2
Windbox-Furnace, mbar	mbar: 8.0 in. H2O: 3.2 (1 in. H2O = 2.49 mbar)

EPT

Madero Boiler MP-B4 Data (continued)

Test Number		
Atomiz Stm Viv Pos, % (outside)		
IIE MEASUREMENTS		
O2 (%)/CO (ppmv) Duct/Stack,	Duct after AH:	Stack:
NOx (unc ppmv/lb/MBtu)	unc, ppmv:	lb/MBtu:
CONTROL ROOM DATA		
AIG 24 Screen		
Steam Coil Air In Temp, °C	39.1	
AH Air In Temp, °C	43.4	
AH Air Out Temp, °C	224.9/190.7	
AH Gas In Temp, °C	385.8	
AH Gas Out Temp, °C	NOT AVAILABLE	
FD Fan Disch Press, mbar	64.4	
AH Air Out Press, mbar	57.8	
Windbox Press, mbar	56.2	
Furnace Press, mbar (x/y)	48.2/48.2	
AH Gas In Press, mbar	38.7	
AH Gas Out Press, mbar (chimney)	-0.9	
FD Fan Damper, % (x/y)	95.4	
O2/CO Furnace Out, %	3.12	
O2 Airheater Out, %	3.01	
ΣAir/Val. Guia Aire, % (x/y)		
Tube Temp L, °C (w/x/y/z)		
Tube Temp R, °C (w/x/y/z)		

Page 2 of 4

EPT

Madero Boiler MP-B4 Data (continued)

Test Number	
CONTROL ROOM DATA (continued)	
CMC 24 Screen	
Boiler Master/V. Real Air, V. Real Gas/Oil, % (x/y/z)	97.5/93.3/0/97.4
V. Real ~~Gas/Oil, %~~ Comb/Air	1.04
COM 24 Screen	
Combust. Hdr Press, barg	9.5
Combustoleo Valve Pos, %	77 / 80% (OUTSIDE)
Combust. Flow, kg/sec, %	3.57
Combustoleo Temp, °C	116.9
Combust. Hdr Burner Press, barg (x/y)	7.01/7.06
Gas Hdr Press, barg	—
Gas Valve Position, %	—
Gas Flow, Nm^3/sec	—
Gas Brnr Hdr Press, barg (x/y)	—
Atomiz Steam Press, barg (x/y)	8.5/8.4
Atomiz Steam Valve Pos, %	50
AGV 24 Screen	
Feedwater (Alim) Press, barg	59.6
Feedwater (Alim) Flow, kg/sec	46.3
Steam Press, barg	41
Steam Temp, °C	382
Steam Flow, kg/sec	43.8
Drum Press, barg (xy)	42.7

EPT

Madero Boiler MP-B4 Flame Scanner Data

Test No: "A"
Scanner:
Date: 6/4/01

Burner No.	Intensity	Pulse Rate
1	JUMPERED	
2	100	750-900
3	100	1400-1700
4	100	900-1000
5	100	260-500
6	100	1400

99 gain

New scanner, 35% range

Test No: 1 - PRE-PM (100% air)
Scanner: Dunac
Date: 6/6/01 (1926 hrs)

Burner No.	Intensity	Pulse Rate
1	100	150-250
2	100	130-400
3	100	1200-1500
4	100	350-420
5	100	850-1,000
6	100	1,360-1,440

Jumpered

Dunac new, 35% gain (others 99%)

Test No: 2
Scanner:
Date: 6/7/01 11:50am

Burner No.	Intensity	Pulse Rate
1	100	70-110
2	100	350-650
3	100	1,000-1,150
4	100	330-400
5	100	800-930
6	100	1,300-1,450

Jumpered

New Dunac, 35% gain

Test No: 3
Scanner:
Date: 6/7/01 1510 hrs

Burner No.	Intensity	Pulse Rate
1	100	800-1,000
2	100	445-800
3	100	2,400-3,000
4	100	220-320
5	100	780-900
6	100	1350-1450

Test No: 4
Scanner:
Date: 6-7-01 20:00 Hrs

Burner No.	Intensity	Pulse Rate
1	100	710-940
2	↓	170-560
3	↓	1800-3100
4	↓	330-430
5	↓	740-950
6	↓	1330-1480

Test No: 6
Scanner:
Date: 6-8-01 16:20 Hrs

Burner No.	Intensity	Pulse Rate
1	100	750-900
2	↓	1050-1270
3	↓	2200-2800
4	↓	1150-1450
5	↓	620-720
6	↓	1030-1250

TEST 5 - NO SCANNER DATA

Madero Boiler MP-B4 Data

Test Number/Date/Time	2 6/7/01 11:41
Test Description	140 T/h, 6 oil, nominal (DCS) O_2 OIL VALVE SWINGING, IIE 2ND PM TEST
Excess O2 (Plant), %	Furnace Out: 3.22 AH Out: 3.18
Steam Flow, kg/sec	39.8 t/h (metric): 143
Feedwater Flow, kg/sec	43.0
Oil Flow, kg/sec	3.11 - 3.33 t/h (metric): 11.2 - 12.0
Oil Hdr Press, kg/cm²	Main Supply Hdr: 10.8 - 11.2 SWINGS Regulator Outlet: 8.3 - 8.5 Control Valve Outlet: 6.2 - 6.5
Oil Burner Press, kg/cm²	Brnr 1: — Brnr 2: 6.1 - 6.4 Brnr 3: —
Oil Burner Press, kg/cm²	Brnr 4: — Brnr 5: — Brnr 6: —
Atomiz. Steam, kg/cm²	Brnr 1: — Brnr 2: 7.8 Brnr 3: —
Atomiz. Steam, kg/cm²	Brnr 4: — Brnr 5: — Brnr 6: —
Atomiz. Steam, kg/cm²	Upstream of Burners: 8.5 Header (% of 16): 50 (barg):
Oil Temp, °C	119.8
Steam/Oil ΔP (DCS)	1.5
Gas Hdr Press, kg/cm²	Valve In: 6.0 Valve Out: — Valve % Open: —
Gas. Burn. Press, kg/cm²	Brnr 1: — Brnr 2: — Brnr 3: —
Gas. Burn. Press, kg/cm²	Brnr 4: — Brnr 5: Brnr 6:
SH Steam Temp, °C	379.5
Oil Flow, t/h (local meter)	OIL VALVE SWINGING 11.3 - 11.8 lb/h-burner: 4,143 - 4,327
Plume Appearance	PERIODIC LIGHT PUFFS (CAUSED by OIL FLOW SPIKES?)
Windbox Press, mbar	44.6
Furnace Press, mbar	38.4
Windbox-Furnace, mbar	mbar: 6.2 in. H2O: 2.5 (1 in. H2O = 2.49 mbar)

NG/OIL

IIE DUCT A: 3.57 % O_2. NOx = 188 CO = 11 NOx_c = 194 > 195
AVG DUCT B: 3.13 % O_2 NOx = 195 CO = 19 NOx_c = 196
PLANT ROSEMOUNT O_2 IN TEST BUILDING: 2.9/2.8 % AVG NOx = 0.25 lb/MBtu
AVG O_2 = 3.35

Madero Boiler MP-B4 Data (continued)

Test Number	2	
Atomiz Stm Vlv Pos, % (outside)	50	
IIE MEASUREMENTS		
O2 (%)/CO (ppmv) Duct/Stack,	Duct after AH:	Stack:
NOx (unc ppmv/lb/MBtu)	unc, ppmv:	lb/MBtu:
CONTROL ROOM DATA		
AIG 24 Screen		
Steam Coil Air In Temp, °C	39.9	
AH Air In Temp, °C	44.4	
AH Air Out Temp, °C	220.6/188	
AH Gas In Temp, °C	374.8	
AH Gas Out Temp, °C	—	
FD Fan Disch Press, mbar	51.2	
AH Air Out Press, mbar	45.8	
Windbox Press, mbar	44.6	
Furnace Press, mbar (x/y)	38.4/38.4	
AH Gas In Press, mbar	30.7	
AH Gas Out Press, mbar	-0.9	
FD Fan Damper, % (x/y)	46.7	
O2/CO Furnace Out, %	3.22	
O2 Airheater Out, %	3.18	
ΣAir/Val. Guia Aire, % (x/y)	84.3/85.2	
Tube Temp L, °C (w/x/y/z)	335.4/331.1/291.6/371.4	
Tube Temp R, °C (w/x/y/z)	366.8/386.9	

EPT

Madero Boiler MP-B4 Data (continued)

Test Number	2
CONTROL ROOM DATA (continued)	
CMC 24 Screen	
Boiler Master/V. Real Air, V. Real Gas/Oil, % (x/y/z)	80 / 83.5 / 0 / 87.6
V. Real ~~Gas/Oil~~, % Comb/Air	1.00-1.08
COM 24 Screen	
Combust. Hdr Press, barg	9.6
Combustoleo Valve Pos, %	65-70 LOCAL 70-80 (SWING)
Combust. Flow, kg/sec, %	3.11-3.33
Combustoleo Temp, °C	119.8
Combust. Hdr Burner Press, barg (x/y)	7.8/7.7
Gas Hdr Press, barg	5.1
Gas Valve Position, %	–
Gas Flow, Nm^3/sec	–
Gas Brnr Hdr Press, barg (x/y)	–
Atomiz Steam Press, barg (x/y)	6.2/6.2 ± 0.1
Atomiz Steam Valve Pos, %	47.4
AGV 24 Screen	
Feedwater (Alim) Press, barg	59.5
Feedwater (Alim) Flow, kg/sec	43.0
Steam Press, barg	41.8
Steam Temp, °C	379.5
Steam Flow, kg/sec	39.7
Drum Press, barg (xy)	43.1

EPT

Madero Boiler MP-B4 Data

Test Number/Date/Time	3- 6/7/01 14:54 IIE PM
Test Description	140 T/h, 4 OIL, 2 GAS, O_2 AT DCS LIMIT (LOW)
Excess O2 (Plant), %	Furnace Out: 2.8 AH Out: 2.5
Steam Flow, kg/sec	t/h (metric):
Feedwater Flow, kg/sec	
Oil Flow, kg/sec	2.04 BYPASS OPEN t/h (metric):
Oil Hdr Press, kg/cm²	Main Hdr: 11.3 Regulator Outlet: 8.8 Control Valve Outlet: 6.2
Oil Burner Press, kg/cm²	Brnr 1: OOS Brnr 2: 6.2 Brnr 3: OOS
Oil Burner Press, kg/cm²	Brnr 4: Brnr 5: Brnr 6:
Atomiz. Steam, kg/cm²	Brnr 1: OOS Brnr 2: 7.8 Brnr 3: OOS
Atomiz. Steam, kg/cm²	Brnr 4: Brnr 5: Brnr 6:
Atomiz. Steam, kg/cm²	Upstream of Burners: 8.6 Header (% of 16): (barg): 50%
Oil Temp, °C	118
Steam/Oil ΔP (DCS)	1.5
Gas Hdr Press, kg/cm²	Valve In: 5.9 Valve Out: 2.4 Valve % Open:
Gas. Burn. Press, kg/cm²	Brnr 1: NO GAUGE Brnr 2: — Brnr 3: NO GAUGE
Gas. Burn. Press, kg/cm²	Brnr 4: — Brnr 5: — Brnr 6: —
SH Steam Temp, °C	
Oil Flow, t/h (local meter)	7.3 lb/h-burner:
Plume Appearance	
Windbox Press, mbar	
Furnace Press, mbar	
Windbox-Furnace, mbar	mbar: in. H2O: (1 in. H2O = 2.49 mbar)

EPT

Madero Boiler MP-B4 Data (continued)

Test Number	3	
Atomiz Stm Vlv Pos, % (outside)		
IIE MEASUREMENTS		
O2 (%)/CO (ppmv) Duct/Stack,	Duct after AH:	Stack:
NOx (unc ppmv/lb/MBtu)	unc, ppmv:	lb/MBtu:
CONTROL ROOM DATA		
AIG 24 Screen		
Steam Coil Air In Temp, °C	40.6	
AH Air In Temp, °C	45.1	
AH Air Out Temp, °C	222.6/188.1	
AH Gas In Temp, °C	370.5	
AH Gas Out Temp, °C	—	
FD Fan Disch Press, mbar	46.4	
AH Air Out Press, mbar	42.0	
Windbox Press, mbar	40.9	
Furnace Press, mbar (x/y)	35.0	
AH Gas In Press, mbar	28.0	
AH Gas Out Press, mbar	-0.9	
FD Fan Damper, % ~~(x/y)~~	42.5	
O2/CO Furnace Out, %	2.9	
O2 Airheater Out, %	2.5	
ΣAir/Val. Guia Aire, % (x/y)	80.0/81.5	
Tube Temp L, °C (w/x/y/z)	348.2/376.3/292.3/365.6	
Tube Temp R, °C (w/x/y/z)	362.3/391.3	

Page 2 of 4

EPT

Madero Boiler MP-B4 Data (continued)

Test Number	5
CONTROL ROOM DATA (continued)	
CMC 24 Screen	
Boiler Master/V. Real Air, V. Real Gas/Oil, % (x/y/z)	78.3/80.3/27.8/55.2
V. Real Gas/Oil, %	1.04
COM 24 Screen	
Combust. Hdr Press, barg	10.0
Combustoleo Valve Pos, %	48.0 50 (LOCAL)
Combust. Flow, kg/sec, %	2.04
Combustoleo Temp, °C	118.0
Combust. Hdr Burner Press, barg (x/y)	7.7/7.5
Gas Hdr Press, barg	4.7
Gas Valve Position, %	~~1.15 1.19~~ 0 (MIN, PRESS REG)
Gas Flow, Nm^3/sec	1.15-1.19
Gas Brnr Hdr Press, barg (x/y)	2.2
Atomiz Steam Press, barg (x/y)	7.5-7.7
Atomiz Steam Valve Pos, %	41
AGV 24 Screen	
Feedwater (Alim) Press, barg	59.5
Feedwater (Alim) Flow, kg/sec	42.1
Steam Press, barg	41.2
Steam Temp, °C	379.9
Steam Flow, kg/sec	39.1
Drum Press, barg (xy)	42.6

EPT

Madero Boiler MP-B4 Data

Test Number/Date/Time	4 6/7/01 1940 hours
Test Description	160 T/h, 4 OIL, 2 GAS, NOMINAL O2 IIE PM TEST
Excess O2 (Plant), %	Furnace Out: 2.06 AH Out: 2.13
Steam Flow, kg/sec	44.9 t/h (metric): 162
Feedwater Flow, kg/sec	48.4
Oil Flow, kg/sec	2.29 Bypass cracked open t/h (metric):
Oil Hdr Press, kg/cm²	Main Hdr: 11.3 Regulator Outlet: 8.5 Control Valve Outlet: 6.9
Oil Burner Press, kg/cm²	Brnr 1: Brnr 2: 7.0 Brnr 3:
Oil Burner Press, kg/cm²	Brnr 4: Brnr 5: Brnr 6:
Atomiz. Steam, kg/cm²	Brnr 1: Brnr 2: 8.6 Brnr 3:
Atomiz. Steam, kg/cm²	Brnr 4: Brnr 5: Brnr 6:
Atomiz. Steam, kg/cm²	Upstream of Burners: 9.1 Header (% of ~~16~~ 100): 55 (barg):
Oil Temp, °C	120.4
Steam/Oil ΔP (DCS)	1.5
Gas Hdr Press, kg/cm²	Valve In: 5.8 Valve Out: 3.1 Valve % Open: ~12% (MIN GAS REG OPEN)
Gas. Burn. Press, kg/cm²	Brnr 1: No Gauge Brnr 2: Brnr 3: No gauge
Gas. Burn. Press, kg/cm²	Brnr 4: Brnr 5: Brnr 6:
SH Steam Temp, °C	380.9
Oil Flow, t/h (local meter)	8.18-8.26 lb/h-burner:
Plume Appearance	light to medium puffs nearly continuous - minimum O2
Windbox Press, mbar	54.8
Furnace Press, mbar	46.7
Windbox-Furnace, mbar	mbar: 8.1 in. H2O: (1 in. H2O = 2.49 mbar)

EPT

Madero Boiler MP-B4 Data (continued)

Test Number	4	
Atomiz Stm Vlv Pos, % (outside)	60	
IIE MEASUREMENTS		
O2 (%)/CO (ppmv) Duct/Stack,	Duct after AH:	Stack:
NOx (unc ppmv/lb/MBtu)	unc, ppmv:	lb/MBtu:
CONTROL ROOM DATA		
AIG 24 Screen		
Steam Coil Air In Temp, °C	38.8	
AH Air In Temp, °C	43.6	
AH Air Out Temp, °C	230.6/194.4	
AH Gas In Temp, °C	391.6	
AH Gas Out Temp, °C	—	
FD Fan Disch Press, mbar	62.2	
AH Air Out Press, mbar	56.1	
Windbox Press, mbar	54.5	
Furnace Press, mbar (x/y)	46.4/46.6	
AH Gas In Press, mbar	37.3	
AH Gas Out Press, mbar	-0.9	
FD Fan Damper, % (x/y)	61.1	
O2/CO Furnace Out, %	1.98	
O2 Airheater Out, %	2.12	
ΣAir/Val. Guia Aire, % (x/y)	90.9/99.1	
Tube Temp L, °C (w/x/y/z)	356.3/341.7/293.8/363.8	
Tube Temp R, °C (w/x/y/z)	357.8/387.1/0/0	

EPT

Madero Boiler MP-B4 Data (continued)

Test Number	4
CONTROL ROOM DATA (continued)	
CMC 24 Screen	
Boiler Master/V. Real Air, V. Real Gas/Oil, % (x/y/z)	89.8/90.9/34.8/62.6
V. Real ~~Gas/Oil~~ COMB/AIRE, %	1.07
COM 24 Screen	
Combust. Hdr Press, barg	9.9
Combustoleo Valve Pos, %	58.4
Combust. Flow, kg/sec, %	2.29
Combustoleo Temp, °C	120.5
Combust. Hdr Burner Press, barg (x/y)	8.6/8.4
Gas Hdr Press, barg	4.7
Gas Valve Position, %	14.23
Gas Flow, Nm^3/sec	1.47
Gas Brnr Hdr Press, barg (x/y)	2.91/2.90
Atomiz Steam Press, barg (x/y)	8.5/8.4
Atomiz Steam Valve Pos, %	42
AGV 24 Screen	
Feedwater (Alim) Press, barg	59.8
Feedwater (Alim) Flow, kg/sec	48.1
Steam Press, barg	41.9
Steam Temp, °C	380.9
Steam Flow, kg/sec	45.0
Drum Press, barg (xy)	43.7

Page 3 of 4

EPT

100

105 – 3.5 ppm

Madero Boiler MP-B4 Data

Test Number/Date/Time	#5 JUNE 8, 2001 15:00 HRS		
Test Description	6 BURNERS ON GAS MIN O2 – BASED CA' CO MAX LOAD LIMITED BY LOW GAS HDR PRESS.*		
Excess O2 (Plant), %	Furnace Out: 1.26	AH Out: X 3.6 = 141.1	
Steam Flow, kg/sec	39.2	t/h (metric):	
Feedwater Flow, kg/sec	41.1		
Oil Flow, kg/sec		t/h (metric):	
Oil Hdr Press, kg/cm²	Main Hdr:	Regulator Outlet:	Control Valve Outlet:
Oil Burner Press, kg/cm²	Brnr 1:	Brnr 2:	Brnr 3:
Oil Burner Press, kg/cm²	Brnr 4:	Brnr 5:	Brnr 6:
Atomiz. Steam, kg/cm²	Brnr 1:	Brnr 2:	Brnr 3:
Atomiz. Steam, kg/cm²	Brnr 4:	Brnr 5:	Brnr 6:
Atomiz. Steam, kg/cm²	Upstream of Burners:	Header (% of 16): (barg):	
Oil Temp, °C			
Steam/Oil ΔP (DCS)			
LOCAL Gas Hdr Press, kg/cm²	Valve In: 4.4 (suspect)	Valve Out: 2.13	Valve % Open:
Gas. Burn. Press, kg/cm²	Brnr 1: —	Brnr 2: —	Brnr 3: —
Gas. Burn. Press, kg/cm²	Brnr 4: 2.12	Brnr 5: 2.1	Brnr 6: >2
SH Steam Temp, °C	421.5		
Oil Flow, t/h (local meter)		lb/h-burner:	
Plume Appearance	Clear		
Windbox Press, mbar	38		
Furnace Press, mbar	32		
Windbox-Furnace, mbar	mbar: 6	in. H2O:	(1 in. H2O = 2.49 mbar)

Flames blue/pink – near wall clear viewed thru peep holes. EPT

* Plant could not open gas vs bypass (never opened) and didn't want to open gas vs further on thinking

101

Madero Boiler MP-B4 Data (continued)

Test Number	5	
Atomiz Stm Vlv Pos, % (outside)		
IIE MEASUREMENTS		
O2 (%)/CO (ppmv) Duct/Stack,	Duct after AH:	Stack:
NOx (unc ppmv/lb/MBtu)	unc, ppmv:	lb/MBtu:
CONTROL ROOM DATA		
AIG 24 Screen		
Steam Coil Air In Temp, °C	41.6	
AH Air In Temp, °C	46.4	
AH Air Out Temp, °C	224.8	
AH Gas In Temp, °C	359.7	
AH Gas Out Temp, °C	—	
FD Fan Disch Press, mbar	42.7	
AH Air Out Press, mbar	38.9	
Windbox Press, mbar	38.0	
Furnace Press, mbar (x/y)	32.3/32.4	
AH Gas In Press, mbar	25.6	
AH Gas Out Press, mbar	-1.0	
FD Fan Damper, % (x/y)	40	
O2/CO Furnace Out, %	1.26	
O2 Airheater Out, %	1.16	
ΣAir/Val. Guia Aire, % (x/y)	76.8/85.1	
Tube Temp L, °C (w/x/y/z)	367.5/362.5/315.1/412.8	
Tube Temp R, °C (w/x/y/z)	405.1/429.4	

Page 2 of 4

EPT

Madero Boiler MP-B4 Data (continued)

Test Number	5
CONTROL ROOM DATA (continued)	
CMC 24 Screen	
Boiler Master/V. Real Air, V. Real Gas/Oil, % (x/y/z)	
V. Real Gas/Oil, %	
COM 24 Screen	
Combust. Hdr Press, barg	
Combustoleo Valve Pos, %	
Combust. Flow, kg/sec, %	
Combustoleo Temp, °C	
Combust. Hdr Burner Press, barg (x/y)	
Gas Hdr Press, barg	3.46 (Low due to low plant capacity)
Gas Valve Position, %	84
Gas Flow, Nm^3/sec	3.51
Gas Brnr Hdr Press, barg (x/y)	2.11/2.10
Atomiz Steam Press, barg (x/y)	
Atomiz Steam Valve Pos, %	
AGV 24 Screen	
Feedwater (Alim) Press, barg	59.72
Feedwater (Alim) Flow, kg/sec	41.1
Steam Press, barg	41.34
Steam Temp, °C	421.2
Steam Flow, kg/sec	39.3
Drum Press, barg (xy)	42.8

EPT

Madero Boiler MP-B4 Data

Test Number/Date/Time	#6 JUNE 8, 2001 16:20 HRS		
Test Description	6 BURNERS ON GAS O2 AT AUTOMATIC CONTROL VALVE MAX LOAD LIMITED BY LOW GAS HDR. PRESS.		
Excess O2 (Plant), %	Furnace Out: 2.37	AH Out: 2.09	
Steam Flow, kg/sec	38.0	t/h (metric): 137	
Feedwater Flow, kg/sec	41.4		
Oil Flow, kg/sec		t/h (metric):	
Oil Hdr Press, kg/cm^2	Main Hdr:	Regulator Outlet:	Control Valve Outlet:
Oil Burner Press, kg/cm^2	Brnr 1:	Brnr 2:	Brnr 3:
Oil Burner Press, kg/cm^2	Brnr 4:	Brnr 5:	Brnr 6:
Atomiz. Steam, kg/cm^2	Brnr 1:	Brnr 2:	Brnr 3:
Atomiz. Steam, kg/cm^2	Brnr 4:	Brnr 5:	Brnr 6:
Atomiz. Steam, kg/cm^2	Upstream of Burners:	Header (% of 16): (barg):	
Oil Temp, °C			
Steam/Oil ΔP (DCS)			
Gas Hdr Press, kg/cm^2	Valve In: 3.45	Valve Out: 2.	Valve % Open:
Gas. Burn. Press, kg/cm^2	Brnr 1: —	Brnr 2: —	Brnr 3: —
Gas. Burn. Press, kg/cm^2	Brnr 4: 2.09	Brnr 5: 2.05	Brnr 6: >2
SH Steam Temp, °C			
Oil Flow, t/h (local meter)		lb/h-burner:	
Plume Appearance	Clear.		
Windbox Press, mbar			
Furnace Press, mbar			
Windbox-Furnace, mbar	mbar:	in. H2O:	(1 in. H2O = 2.49 mbar)

EPT

Madero Boiler MP-B4 Data (continued)

Test Number	6	
Atomiz Stm Vlv Pos, % (outside)		
IIE MEASUREMENTS		
O2 (%)/CO (ppmv) Duct/Stack,	Duct after AH:	Stack:
NOx (unc ppmv/lb/MBtu)	unc, ppmv:	lb/MBtu:
CONTROL ROOM DATA		
AIG 24 Screen		
Steam Coil Air In Temp, °C	40.4	
AH Air In Temp, °C	44.9	
AH Air Out Temp, °C	223.0	
AH Gas In Temp, °C	361.8	
AH Gas Out Temp, °C	—	
FD Fan Disch Press, mbar	46.4	
AH Air Out Press, mbar	42.3	
Windbox Press, mbar	41.2	
Furnace Press, mbar (x/y)	34.9/35.2	
AH Gas In Press, mbar	27.9	
AH Gas Out Press, mbar	−1.0	
FD Fan Damper, % (x/y)	43	
O2/CO Furnace Out, %	2.37	
O2 Airheater Out, %	2.09	
ΣAir/Val. Guia Aire, % (x/y)	80.5/79.8	
Tube Temp L, °C (w/x/y/z)	366.4/362.2/315.1/412.1	
Tube Temp R, °C (w/x/y/z)	464.8/427.6	

REL COMB DATE 1.02 %

EPT

105

Madero Boiler MP-B4 Data (continued)

Test Number	6	
CONTROL ROOM DATA (continued)		
CMC 24 Screen		
Boiler Master/V. Real Air, V. Real Gas/Oil, % (x/y/z)	81.6/81.7/80.2/—	
V. Real Gas/Oil, %	81.7/0	
COM 24 Screen		
Combust. Hdr Press, barg		
Combustoleo Valve Pos, %		
Combust. Flow, kg/sec, %		
Combustoleo Temp, °C		
Combust. Hdr Burner Press, barg (x/y)		LOCAL
Gas Hdr Press, barg	3.45	4.4 ? (huge suspect ?)
Gas Valve Position, %	~70	~70
Gas Flow, Nm^3/sec	3.43	
Gas Brnr Hdr Press, barg (x/y)	2.06/2.05	2.12
Atomiz Steam Press, barg (x/y)		
Atomiz Steam Valve Pos, %		
AGV 24 Screen		Scanners
Feedwater (Alim) Press, barg	59.76	1) 750-900 100%
Feedwater (Alim) Flow, kg/sec	41.1	2) 1050-1270
Steam Press, barg	41.27	3) 2200-2800
Steam Temp, °C	420.6	4) 1150-1450
Steam Flow, kg/sec	37.8	5) 620-720
Drum Press, barg (xy)	42.6	6) 1030-1250 ✓

Page 3 of 4

EPT

106

Appendix E

Fuel Analyses

Fuel Oil Characteristics at Madero MP-B4 (Typical)

Fuel Parameter	Value
Sulfur, wt %	3.9
Vanadium, ppm	327
Higher Heat Value, kcal/g (Btu/lb)	9.988 (17,980)
Asphaltenes, nC7 wt %	12.0
Specific Gravity	1.00
Viscosity, SSF at 50°C	150-550

@PETROLEOS MEXICANOS
REFINERIA MADERO
LABORATORIO
ANALISIS CROMATOGRAFICO

PLANTA: gas combustible
FECHA DE MUESTREO: Abr-00
FECHA DE ANALISIS:

REFERENCIAS SOLICITUD

	17 al 25 comb.MA	18 al 29 /04/2000 comb.MB		11/05/00 com.MA	
COMPONENTES	% MOL	% MOL		% MOL	
INERTES	5.5	5.9		0.6	
HIDROGENO	26.5	26.5		12.1	
METANO	33.6	32.2		67.5	
CO	1.0	1.2		0.0	
CO2	0.2	0.1		0.4	
ETILENO	6.9	7.1		0.8	
ETANO	13.0	13.1		8.1	
H2S	0.0	0.1		0.4	
PROPILENO	6.5	6.5		0.9	
PROPANO	3.8	3.8		4.1	
ISOBUTANO	0.5	0.7		0.6	
ISOBUTILENO	0.2	0.2		0.1	
BUTANO-N	0.7	0.7		1.3	
TRANS-BUTENO	0.3	0.3			
CIS-BUTENO	0.2	0.2			
BUTENO-UNO	0.1	0.2		0.1	
ISOPENTANO	0.7	0.6		0.9	
PENTANO-N	0.1	0.2		1.0	
AMILENOS	0.0				
HEXANOS	0.2	0.4		1.1	
HEPTANOS					
BD 1,3					
ACETILENOS TOTALES					
TOTAL	100.0	100.0		100.0	

P.ESP. LIQ. 15.6/15.6oC	0.352	0.359		0.309	
P. ESP. GAS (AIRE=1)	0.690	0.703		0.688	
PODER CAL. TOTAL. (BTU/FT3)	1120	1132		1199	
PODER CAL. NETO (BTU/FT3)	1023	1033		1088	
FRACC. LIQ. TOTAL LT/M3	2.531	2.529		2.875	
PESO MOLECULAR	19.99	20.35		19.93	

*Cp (BTU/LB MOL-F)	9.8782	9.9667		10.0655	
*VISCOSIDAD (Cp)	0.0117	0.0117		0.0112	

observaciones: * calculados a presión = 1 atm y Temperatura = 20°C

ING. CARLOS OBLEDO TAPIA
ENCARGADO SECC. GASES.

ING. CARLOS GARCIA BORBOLLA
SUPTE. DE QUIMICA

PEMEX
REFINACION

REFINERIA FCO. I. MADERO
SUPERINTENDENCIA DE QUIMICA
LABORATORIO DE GASES ANALISIS CROMATOGRAFICO
INFORME No. 225/00 EXP. 7-2

MUESTRA : RED DE GAS COMBUSTIBLE

FECHA DE MUESTREO 1,2,3 DE NOVIEMBRE DEL 2000

REFERENCIAS: SOLICITUD DEL ING. JORGE VARGAS MALAGON

		1NOV	2NOV	3NOV		
COMPONENTES	% MOL.	% MOL.	% MOL.	% MOL.	% MOL.	% MOL.
HIDROGENO		26.3	27.3	26.3		
INERTES		1.2	1.3	1.4		
METANO		59.3	58.6	60.0		
CO MONOXIDO						
CO_2						
ETILENO						
ETANO		5.9	5.8	5.6		
H2S		0.2	0.2	0.2		
PROPILENO						
PROPANO		4.0	3.9	3.6		
ISOBUTANO		1.0	0.9	0.9		
ISOBUTILENO						
BUTANO-N		1.0	1.0	1.0		
TRANS-2-BUTENO						
CIS-2-BUTENO						
BUTENO-1						
ISOPENTANO		0.4	0.4	0.4		
PENTANO-NORMAL		0.3	0.3	0.3		
AMILENOS						
BUTADIENO 1,3						
HEXANOS Y MAS		0.4	0.3	0.3		
TOTAL		100.0	100.0	100.0		
PODER CAL. NETO A 15.6 C Y 700 mm Hg BTU/pie^3		986	986	985		

NOTA: ESTE INFORME NO PODRA REPRODUCIRSE TOTAL O PARCIALMENTE SIN LA PREVIA AUTORIZACION DE ESTE LAB

Ing. Carlos R. Obledo Tapia
Enc. Sec. Gases.

ING. CARLOS GARCIA BORBOLLA
SUPTE. QUIMICO

Nghm

110

PEMEX
REFINACION

REFINERIA FCO. I. MADERO
SUPERINTENDENCIA DE QUIMICA
LABORATORIO DE GASES ANALISIS CROMATOGRAFICO
INFORME No. 225/00 EXP. 7-2

MUESTRA : RED DE GAS COMBUSTIBLE

FECHA DE MUESTREO 12 DE DICIEMBRE DEL 2000

REFERENCIAS: SOLICITUD DEL ING. JORGE VARGAS MALAGON

		12DIC				
COMPONENTES	% MOL.	% MOL.	% MOL.	% MOL.	% MOL.	% MOL.
HIDROGENO		38.6				
INERTES		0.8				
METANO		39.3				
CO MONOXIDO		0.1				
CO_2		0.3				
ETILENO		0.8				
ETANO		7.3				
H2S		0.2				
PROPILENO		1.2				
PROPANO		4.1				
ISOBUTANO		1.3				
ISOBUTILENO		0.2				
BUTANO-N		2.3				
TRANS-2-BUTENO		0.2				
CIS-2-BUTENO		0.2				
BUTENO-1		0.2				
ISOPENTANO		1.1				
PENTANO-NORMAL		0.5				
AMILENOS						
BUTADIENO 1,3						
HEXANOS Y MAS		1.3				
TOTAL	100.0	100.0	100.0	100.0		
PODER CAL. NETO A 15.6 C Y 700 mm Hg BTU/pie^3		965				

NOTA: ESTE INFORME NO PODRA REPRODUCIRSE TOTAL O PARCIALMENTE SIN LA PREVIA AUTORIZACION DE ESTE LAB

Ing. Carlos R. Obledo Tapia
Enc. Sec. Gases.

ING. CARLOS GARCIA BORBOLLA
SUPTE. QUIMICO

Nghm

PEMEX
REFINACION

REFINERIA FCO. I. MADERO
SUPERINTENDENCIA DE QUIMICA
LABORATORIO DE GASES ANALISIS CROMATOGRAFICO
INFORME No. 225/00 EXP. 7-2

MUESTRA : RED DE GAS COMBUSTIBLE

FECHA DE MUESTREO 2 DE FEBRERO DEL 2001

REFERENCIAS: SOLICITUD DEL ING. JORGE VARGAS MALAGON

		2 FEBRERO				
COMPONENTES	% MOL.	% MOL.	% MOL.	% MOL.	% MOL.	% MOL.
HIDROGENO		32.7				
INERTES		0.6				
METANO		34.8				
CO MONOXIDO		0.1				
CO_2		0.7				
ETILENO		1.0				
ETANO		10.6				
H2S		1.2				
PROPILENO		1.6				
PROPANO		7.5				
ISOBUTANO		1.9				
ISOBUTILENO		0.3				
BUTANO-N		3.0				
TRANS-2-BUTENO		0.3				
CIS-2-BUTENO		0.2				
BUTENO-1		0.3				
ISOPENTANO		1.3				
PENTANO-NORMAL		0.7				
AMILENOS						
BUTADIENO 1,3						
HEXANOS Y MAS		1.2				
TOTAL	100.0	100.0	100.0	100.0		
PODER CAL. NETO A 15.6 C Y 700 mm Hg BTU/pie^3		1114				

NOTA: ESTE INFORME NO PODRA REPRODUCIRSE TOTAL O PARCIALMENTE SIN LA PREVIA AUTORIZACION DE ESTE LAB

1241 HHV

Ing. Carlos R. Obledo Tapia
Enc. Sec. Gases.

ING. CARLOS GARCIA BORBOLLA
SUPTE. QUIMICO

Nghm

PETROLEOS MEXICANOS
REFINERIA MADERO
LABORATORIO
ANALISIS CROMATOGRAFICO

PLANTA: RED DE GAS COMBUSTB
FECHA DE MUESTREO:
FECHA DE ANALISIS:

REFERENCIAS SOLICITUD

		14-02-01			
COMPONENTES	% MOL	% MOL	%MOL		
INERTES		1.8			
HIDROGENO		26.2			
METANO		43.7			
CO		0.1			
CO2		1.0			
ETILENO		1.3			
ETANO		10.0			
H2S		1.0			
PROPILENO		1.8			
PROPANO		5.8			
ISOBUTANO		1.2			
ISOBUTILENO		0.2			
BUTANO-N		2.3			
TRANS-BUTENO		0.2			
CIS-BUTENO		0.2			
BUTENO-UNO		0.3			
ISOPENTANO		1.2			
PENTANO-N		0.6			
AMILENOS					
HEXANOS		1.1			
HEPTANOS					
BD 1,3					
ACETILENOS TOTALES					
TOTAL	0.0	100.0	0.0		

P.ESP. LIQ. 15.6/15.6oC					
P. ESP. GAS (AIRE=1)					
PODER CAL. TOTAL. (BTU/FT3)					
PODER CAL. NETO (BTU/FT3)		1079			
FRACC. LIQ. TOTAL LT/M3					
PESO MOLECULAR					

ING. SOFIA GARCIA CRISTIANO
ENCARGADO SECC. GASES.

ING. CARLOS GARCIA BORBOLLA
SUPTE. DE QUIMICA

PETROLEOS MEXICANOS
REFINERIA MADERO
LABORATORIO
ANALISIS CROMATOGRAFICO

PLANTA: COMBUSTIBLE
FECHA DE MUESTREO:
FECHA DE ANALISIS: 15-05-01

REFERENCIAS SOLICITUD RED DE GAS

COMPONENTES		% MOL	%MOL		
INERTES		0.7			
HIDROGENO					
METANO		93.7			
CO		0.5			
CO2					
ETILENO					
ETANO		3.6			
H2S		0.5			
PROPILENO					
PROPANO		0.7			
ISOBUTANO		0.1			
ISOBUTILENO					
BUTANO-N		0.1			
TRANS-BUTENO					
CIS-BUTENO					
BUTENO-UNO					
ISOPENTANO					
PENTANO-N					
AMILENOS					
HEXANOS		0.1			
HEPTANOS					
BD 1,3					
ACETILENOS TOTALES					
TOTAL		100.0	0.0		

P.ESP. LIQ. 15.6/15.6oC					
P. ESP. GAS (AIRE=1)					
PODER CAL. TOTAL. (BTU/FT3)					
PODER CAL. NETO (BTU/FT3)		939			
FRACC. LIQ. TOTAL LT/M3					
PESO MOLECULAR					

ING. SOFIA GARCIA CRISTIANO
ENCARGADO SECC. GASES.

ING. CARLOS GARCIA BORBOLLA
SUPTE. DE QUIMICA

114

PETROLEOS MEXICANOS
REFINERIA MADERO
LABORATORIO
ANALISIS CROMATOGRAFICO

PLANTA: RED DE GAS
FECHA DE MUESTREO:
FECHA DE ANALISIS:

REFERENCIAS SOLICITUD

		08-01-01		
COMPONENTES	% MOL	% MOL	%MOL	
INERTES		1.5		
HIDROGENO		37.0		
METANO		35.3		
CO				
CO2		0.2		
ETILENO		0.6		
ETANO		9.5		
H2S		0.1		
PROPILENO		1.2		
PROPANO		7.5		
ISOBUTANO		1.9		
ISOBUTILENO		0.2		
BUTANO-N		1.9		
TRANS-BUTENO		0.2		
CIS-BUTENO		0.2		
BUTENO-UNO		0.2		
ISOPENTANO		1.2		
PENTANO-N		0.6		
AMILENOS				
HEXANOS		0.7		
HEPTANOS				
BD 1,3				
ACETILENOS TOTALES				
TOTAL	0.0	100.0	0.0	

P.ESP. LIQ. 15.6/15.6oC				
P. ESP. GAS (AIRE=1)				
PODER CAL. TOTAL. (BTU/FT3)				
PODER CAL. NETO (BTU/FT3)		1020		
FRACC. LIQ. TOTAL LT/M3				
PESO MOLECULAR				

115

Appendix F

Fuel Flow versus Pressure – Gas-REACH

Gas REACH Fuel Flow Versus Pressure

Madero MP-B4

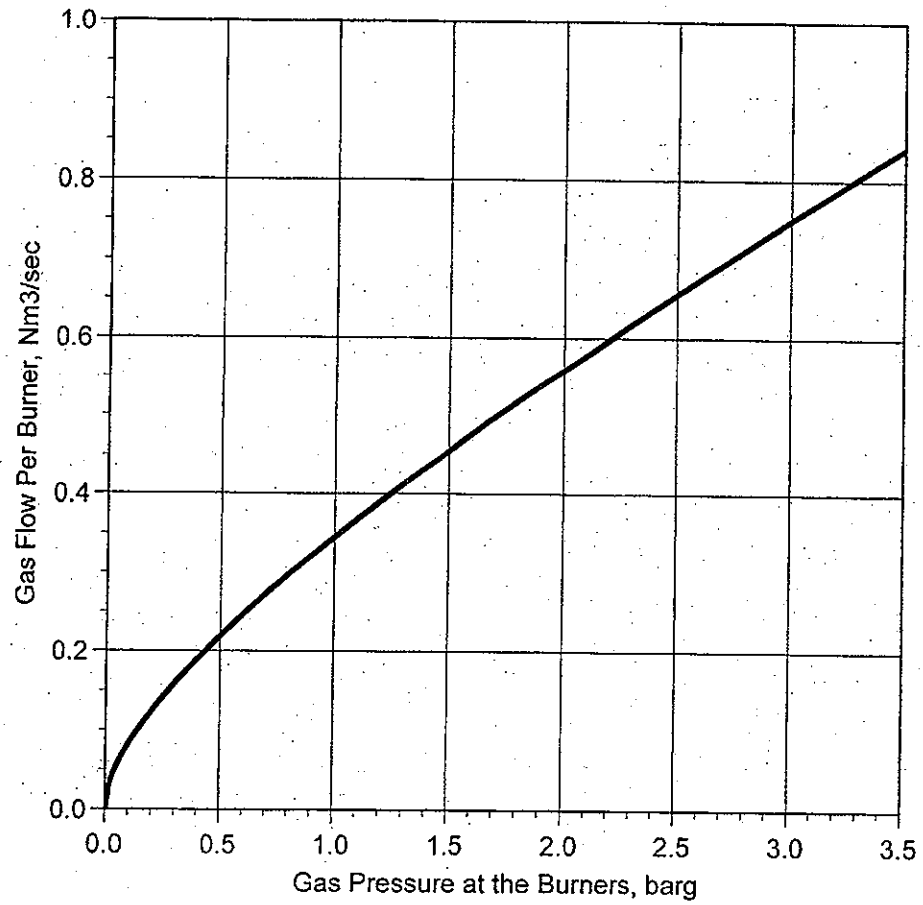

EPT Inc. Rev 7/01

117

Appendix G

Fuel Flow versus Pressure – Oil-REACH Atomizers

Madero MP-B4

Curvas Carasteristicas de Flujo de Combustoleo vs. Presion Para un Quemador
EPT V-Jet 2S-104-168-80-120/8I-28-157 (A)
(Presione a el Quemador)

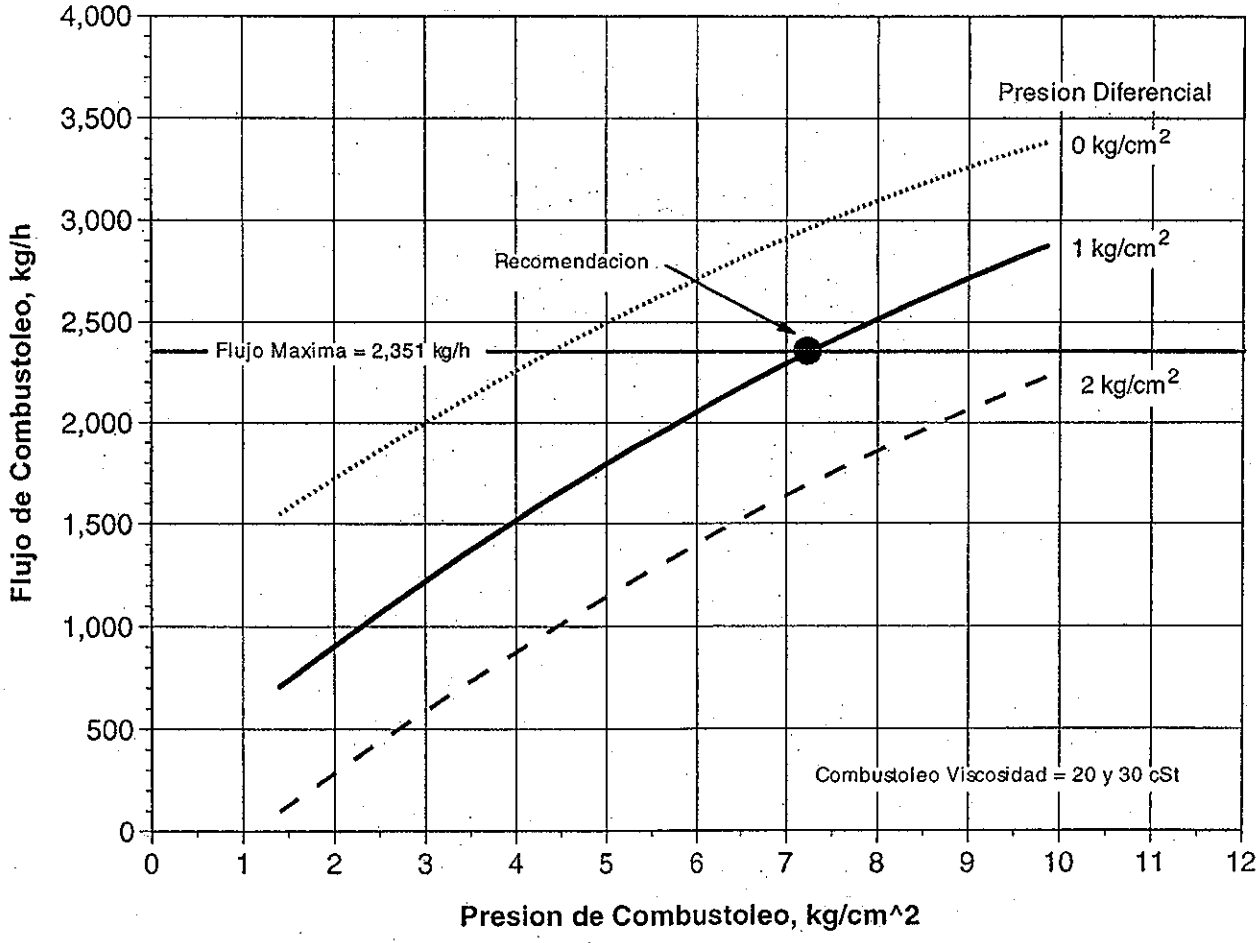

119

Madero MP-B4
Curvas Carasteristicas de Flujo de Relacion Masica Vapor de Atomizacion/Combustoleo vs. Flujo Combustoleo Por un Quemador
EPT V-Jet 2S-104-168-80-120/8I-28-157 (A)

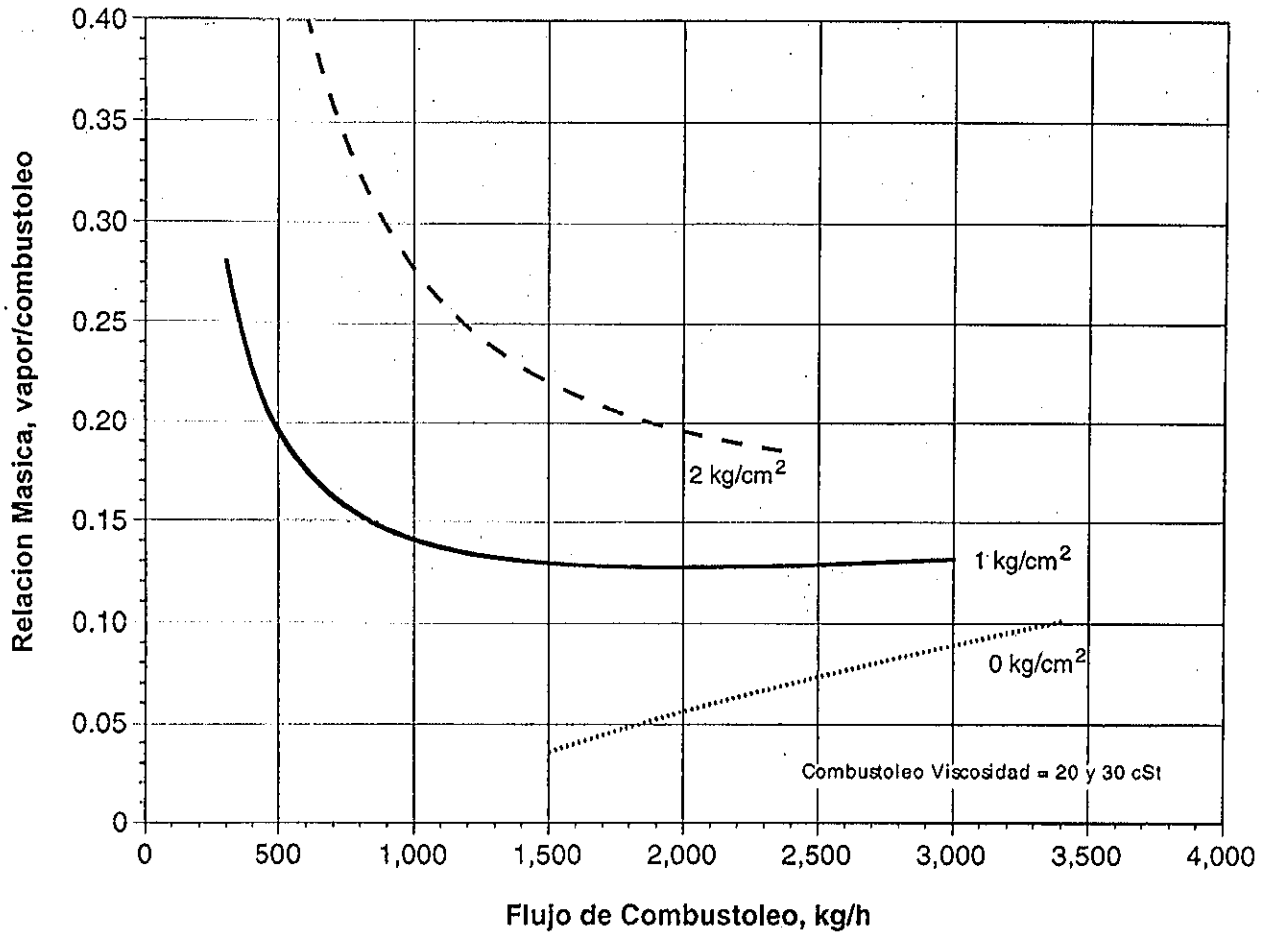

Appendix H

Oil Flow Control Valve Specification

FISHER

SLIDING STEM CONTROL VALVE SPECIFICATION

Customer: Combustion Technologies, LTD.
Contact:
Reference:
Project:
Item: 001 Rev: Qty: 1

R.E. MASON
Contact:
Quote: KC314RD86 Rev: 00 20 MAR 01
Data Sheet:

Service:

Tag:
Size and Type: 3 Inch ET Body

Body Style: Globe
Design Temp:
Design Press:
End Connect: Class 150
In: RF Flanged
Out: RF Flanged
Material: WCC Steel
Ports: Single Port
Flow Directn: Down

Trim Number: 57
Cage Matl: 17-4 PH
Retainer Matl: None
Bushing Matl:
Seat Ring Matl: 316 SST PTFE
VALVE PLUG
Material: 416 SST HD
Guiding: Cage
Balance: Balanced
Shutoff Class: Std Test
Port Size: 2 5/16 Inch
Characteristic: Equal %
Stem Material: 316 SST
Stem Size: 1/2 Inch

Bonnet Style: Plain
Boss Size: 2 13/16 Inch
Packing: PTFE
Access: Not Tapped
Bolt, Bonnet: B7/2H (NCF2)
PackFlg/Bltg: SST/SST

Actuator: Spg & Diaph
Type/Size: 667/40
Travel: 1 1/2 Inch
Bench Set: 7-15 psig
Push Down To: Close
Supply:
To Actuator: 3-15/0-15 psig
Fails Valve: Close
Handwheel: None

Positioner Type: 3582I
Input Signal: 4-20 mA dc
Access: Airset
Gauges: Yes, , Supply, Output
Action: Direct
Certification: None

Controller Type: None
Action:
Measure Element:
Range:
Output:
Mounting:
Airset:
Mounting:

Transducer: None
Input Signal:
Output Signal:
Action:
Mounting:
Airset:
Certifications:

Line In:
Line Out:
Insulation:
Service Cond:
Process Fluid:

		Minimum	Normal	Maximum
SG		0.951	0.951	
T	deg F	200.000	200.000	
P1	psig	148.000	140.000	
dP	psid	20.000	10.000	
Q	lb/h	17000.000	31500.000	
Cv		8.086	21.088	
Km		0.756	0.756	0.756
% Open		42	63	

Maximum Rated Flow Coefficient: 70.7 Cv

00301-1.2.33-SQLSERV 20 MAR 01 03:04:46 pm

122

FISHER Fisher Controls R.E. MASON

Purpose of drawing is for dimensional reference only. Total Calculated Assembly Weight 177 lb

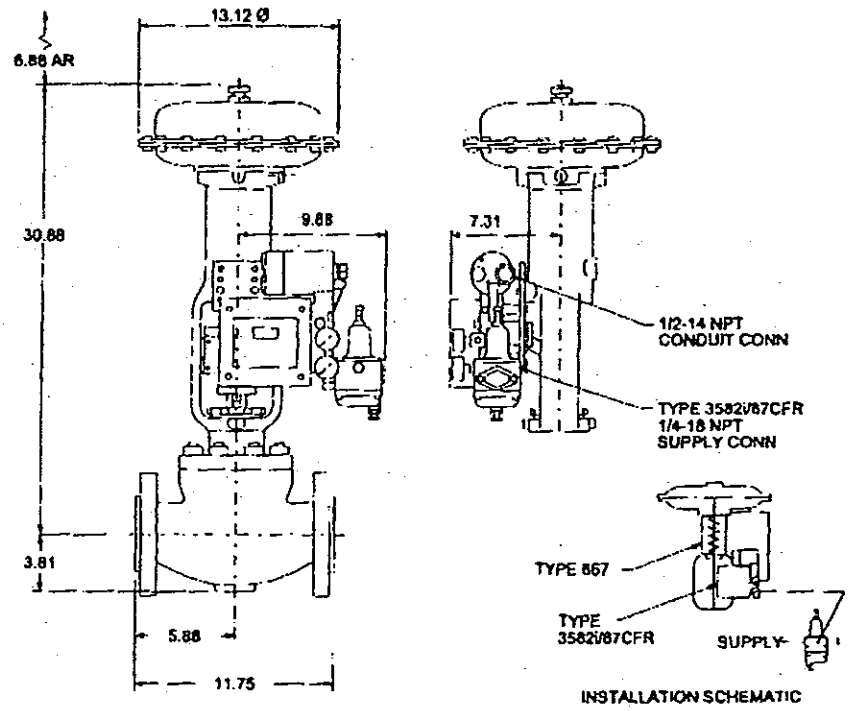

Unit of Measure = Inches, scale=none. Envelope Dimensions are +/- .25. Face to Face Tolerance per ANSI.
3/14/01 DIMENSIONS CERTIFIED CORRECT BY _____ © 2001 Fisher Controls Intl. Inc. FISHER-ROSEMOUNT

ET 3 IN 150 RF 667 SZ 40	CUSTOMER: Combustion Technologies, LTD. CUST REF #: TAG NO:
AR = Actuator Removal Clearance	FISHER REF #: KC314RD86-00 ITEM NO: 001 REV: 00301-1.2.33-1.177-1187-1799

123