PN-ACM-185
110143

ELECTRIC MARKET METERING SUPPORT EVALUATION REPORT

Prepared for:

The United States Agency for International Development
under Contract LAG-I-00-98-00005-05, Task Order 15

Prepared by:

Hagler Bailly Services, Inc.
1530 Wilson Boulevard
Arlington, VA 22209
703-351-0300

Contact:

Michael R. Hajny, P.E.
Dean S. White
Joellyn K. Murphy

July 2000

The reproduction or distribution for sale of any portion of this report without the express written consent of Hagler Bailly Services, Inc. is prohibited. Any other reproduction, publication, distribution or use of the material contained herein must include this acknowledgement and prohibition.

A

TABLE OF CONTENTS

TABLE OF CONTENTS 1

LIST OF FIGURES 5

LIST OF TABLES 5

1. EXECUTIVE SUMMARY 7

1.1 Introduction. 7

1.2 Findings. 7

1.3 Summary Of Recommended Next Steps. 8
1.3.1 Review Of This Report. 8
1.3.2 Identify Sources of Funding for the Items Identified in This Report. 9
1.3.3 Bidding, Procurement, and Implementation. 9

2. EXISTING METERING INFRASTRUCTURE. 13

2.1 Meters. 13

2.2 Telemetry. 13

2.3 Central Processing Of Meter Readings. 14

3. METERING REQUIREMENTS FOR THE ELECTRICITY MARKET. 15

3.1 Measurements Collected. 15
3.1.1 Active (WH). 15
3.1.2 Reactive (VARh) (Optional). 15

3.2 Accuracy. 16
3.2.1 Spread (Dispersion, Variance). 16
3.2.2 Bias. 17
3.2.3 Quantity Versus Quality Of Measurements. 17

3.3 Time Synchronization. 18
3.3.1 Period. 18
3.3.2 Accuracy. 19

3.4 Time Frame For Polling. 20

3.5 Location Of Metering Points. 20
3.5.1 Philosophy Of Metering Points. 25
3.5.1.1 From a Generating Unit to the Transmission Grid. 25
3.5.1.2 To Generating Stations from the Transmission Grid. 25
3.5.1.3 Interconnections With Other Countries. 26
3.5.1.4 500 and 220 kV Substations. 26
3.5.1.5 110 kV Feeders Leaving 220 kV Substations. 27
3.5.1.6 110 kV and 35 kV Lines Between Distribution Companies. 27
3.5.1.7 Between Small Generating Stations and Distribution Companies. 27
3.5.1.8 From the Transmission Grid to Direct Customers. 27
3.5.1.9 Substation Auxiliary Power Used By the Substation. 27
3.5.1.10 Substation Auxiliary Power Used For Non - Substation Purposes. 28
3.5.1.11 Between Distribution Companies. 28
3.5.1.12 Defining Boundaries Within the Transmission Grid (Optional). 28
3.5.1.13 Completely Encircling a Substation (Optional). 29
3.5.2 Number of Metering Points. 29
3.5.2.1 Fichtner Study About Dispatch. 30
3.5.2.2 Aide - Memoire, February, 2000. 30
3.5.2.3 Hagler Bailly Study. 30
3.5.2.4 Electrogadatsema Study. 31
3.5.2.5 Electrodispatcherizatsia. 32
3.5.2.6 Satbobenergoinformatika Study. 32

4. UPGRADES, REPLACEMENTS, AND / OR ADDITIONS. 35

4.1 Material. 35
4.1.1 Revenue Meters For Substations and Generating Plants. 35
4.1.2 Meter Test Switches. 35
4.1.3 Meter Seals, Serial Numbered, Non - Toxic. 36
4.1.4 Meter Seal Tracking Software and Hardware. 41
4.1.5 Meter Control Cable. 41
4.1.6 Communication Cable. 42
4.1.7 Meter Test Equipment for Use in the Laboratory. 42
4.1.8 Meter Test Equipment for Use in the Field. 43
4.1.9 CT and VT Test Equipment for Use in the Field. 43
4.1.10 Additional Test Equipment. 44
4.1.11 New CTs and VTs (Optional). 44

4.2 Technical Assistance. 47
4.2.1 Develop Grid Code. 47
4.2.2 Training: Installation and Grounding Of Electronic Metering Equipment. 47
4.2.3 Training: Meter Sealing and Tracking Procedures. 47

5. ASSOCIATED INSTITUTIONAL REFORMS. 49

5.1 Lead Department For the GWEM Metering Project. 49

5.2 Reducing Theft Of Electricity, Fraud, and Corruption. 49
5.2.1 Code Of Ethics. 49
5.2.2 An Adequate Wage. 50

6. COSTS ESTIMATES AND SCHEDULES 51

6.1 Cost Estimates. 51

6.2 Schedules. 51

6.3 Project Components and Funding Sources. 51

6.4 Benefits, 52

ANNEX 1 GLOSSARY OF ABBREVIATIONS 57

ANNEX 2 REFERENCES 59

ANNEX 3 PROPOSED METERING ITEMS FOR THE GRID CODE 61

A3.1 Unbiased Metering. 61

A3.2 Metering Three Wire and Four Wire Circuits. 61

A3.3 Singularity Of Interconnection Metering. 65
A3.3.1 Active Energy (MWh) Readings. 65
A3.3.2 Active Power (MW) Signals. 65
A3.3.3 Reactive Energy (MVARh) Readings. 65
A3.3.4 Reactive Power (MVAR) Signals. 66

A3.4 Check Metering (Optional). 66
A3.4.1 Shared Revenue Accuracy CTs and VTs. 66
A3.4.2 Second Set Of Revenue Accuracy CTs and VTs. 67
A3.4.3 Second Set Of Relay Accuracy CTs and VTs. 68

A3.5 Substation Auxiliary Power. 70
A3.5.1 Power Supplied from the Transmission Grid for the Control House. 70
A3.5.2 Power Supplied from the Transmission Grid for Non - Substation Activities. 71
A3.5.3 Power Provided By the Local Distribution Company. 71

A3.6 Generating Plant Auxiliary Power. 71

A3.8 Sealing Of Metering Equipment By Both Seller and Buyer. 75
A3.8.1 Meter Seals With Unique Serial Numbers On the Seal. 76
A3.8.2 Meter Seals Without Unique Serial Numbers On the Seal. 76

A3.9 Witnessing Of Metering Tests. 76

A3.10 What Metering Equipment Is Tested. 77

A3.11 Labeling Of Revenue Metering Circuits. 77

ANNEX 4 CODE OF ETHICS FOR METERING PERSONNEL AND CONTRACTORS 79

Figure 6 Code Of Ethics (Draft) 81

ANNEX 5 METERS LISTED BY GENERATING PLANTS AND SUBSTATIONS 83

INDEX 133

QUICK TABLE OF CONTENTS 139

List Of Figures

FIGURE 1 ENERGY SEGMENTS OF THE WHOLESALE ELECTRICITY MARKET 23
FIGURE 2 A TRANSMISSION SYSTEM VIEW OF THE GEORGIA WHOLESALE ELECTRICITY MARKET 24
FIGURE 3 METERING THREE WIRE AND FOUR WIRE CIRCUITS 64
FIGURE 4 ONE ENERGY METER AND ONE POWER TRANSDUCER AT A METERING POINT 69
FIGURE 5 MEASURING ENERGY (KWH) USED BY POWER PLANT AUXILIARIES 73
FIGURE 6 CODE OF ETHICS (DRAFT) 81

List Of Tables

TABLES IN THE BODY OF THE REPORT

TABLE 1 SUMMARY OF RECOMMENDED MEASURES AND TECHNICAL ASSISTANCE 11
TABLE 2 ACCURACY BOUNDS ON THE TIME SYNCHRONIZATION PULSES 19
TABLE 3 TIME PERIOD FOR DATA COLLECTION AFTER A DEMAND INTERVAL 20
TABLE 4 INTERCONNECTIONS WITH NEIGHBORING COUNTRIES 26
TABLE 5 INTERCONNECTIONS BETWEEN REGIONS OF THE GWEM 29
TABLE 6 ADDITIONAL METERS IDENTIFIED BY ELECTROGADATSEMA 32
TABLE 7 SEVERAL ESTIMATES OF THE NUMBER OF METERS NEEDED FOR THE GWEM 33
TABLE 8 NUMBER OF METER SEALS FOR EACH AGENCY (FOR 489 GWEM METERS) 37
TABLE 9 DETAILS OF HOW THE NUMBER OF METER SEALS IS ESTIMATED 39
TABLE 10 TYPICAL PRICES FOR NEW, SINGLE PHASE CTS AND VTS 44
TABLE 11 TEST EQUIPMENT PROPOSED BY ELECTROGADATSEMA 45
TABLE 12 SUMMARY OF RECOMMENDED MEASURES AND TECHNICAL ASSISTANCE (REPEATED) 53
TABLE 13 COSTS: FICHTNER STUDY (BASE CASE) PLUS HAGLER BAILLY STUDY (ADDITIONS) 55

TABLES IN THE ANNEXES OF THE REPORT

TABLE 14 METERING FOR THREE WIRE AND FOUR WIRE CIRCUITS 63
TABLE 15 550 / 220 KV ENGURI HYDRO ELECTRIC PLANT AND SUBSTATION 85
TABLE 16 500 / 220 KV SESTAPHONI SUBSTATION 86
TABLE 17 500 / 220 KV KSANI SUBSTATION 87
TABLE 18 500 / 220 KV GARDABONI THERMAL ELECTRIC PLANT AND SUBSTATION 88
TABLE 19 500 / 220 KV SUB - TOTALS. 90
TABLE 20 220 / 110 KV VEKTOR SUBSTATION 91
TABLE 21 220 / 110 KV BATUMI SUBSTATION 92
TABLE 22 220 / 110 KV LADZHANURI HYDRO ELECTRIC PLANT AND SUBSTATION 93
TABLE 23 220 / 110 KV CHALTUBO SUBSTATION 94
TABLE 24 220 / 110 KV MENDJI SUBSTATION 95
TABLE 25 220 / 110 KV KUTAISI SUBSTATION 96
TABLE 26 220 / 110 KV KASHHURI SUBSTATION 97
TABLE 27 220 / 110 KV GORI SUBSTATION 98
TABLE 28 220 / 110 KV LISI SUBSTATION 99
TABLE 29 220 / 100 KV DIDUBE SUBSTATION 100

TABLE 30 220 / 110 KV MARNEULI SUBSTATION 101
TABLE 31 220 / 110 KV GLDANI SUBSTATION 102
TABLE 32 220 / 110 KV NAVTLUGI SUBSTATION 103
TABLE 33 220 / 110 KV RUSTAVI SUBSTATION 104
TABLE 34 220 / 110 KV GURDJANI SUBSTATION 105
TABLE 35 220 / 110 KV KHRAMI 2 HYDRO ELECTRIC PLANT AND SUBSTATION 106
TABLE 36 220 / 110 KV JINVALI HYDRO ELECTRIC PLANT AND SUBSTATION 107
TABLE 37 220 / 110 KV PHERO SUBSTATION 108
TABLE 38 220 / 110 KV SUB - TOTALS 109
TABLE 39 110 KV METERS IN THE NETWORK 110
TABLE 40 110 KV RIONI HYDRO ELECTRIC PLANT AND SUBSTATION 113
TABLE 41 110 KV GUTAMI HYDRO ELECTRIC PLANTS 1 THROUGH 4 AND SUBSTATIONS 114
TABLE 42 110 KV GUTAMI HYDRO ELECTRIC PLANTS 5 THROUGH 7 AND SUBSTATIONS 115
TABLE 43 110 KV TKIBULI HYDRO ELECTRIC PLANT AND SUBSTATION 116
TABLE 44 110 KV SHAORI HYDRO ELECTRIC PLANT AND SUBSTATION 117
TABLE 45 110 KV ZAHASI HYDRO ELECTRIC PLANT AND SUBSTATION 118
TABLE 46 110 KV KHRAMI 1 HYDRO ELECTRIC PLANT AND SUBSTATION 119
TABLE 47 110 KV SAMTRADIA SUBSTATION 120
TABLE 48 110 KV VARTSIKHE HYDRO ELECTRIC PLANTS AND SUBSTATIONS 121
TABLE 49 110 KV MTAVARI ARKHI SUBSTATION 123
TABLE 50 AUXILIARY POWER AT LOAD DISPATCH CENTERS 124
TABLE 51 110 KV SUB - TOTALS 125
TABLE 52 220 / 110 KV BZIPI SUBSTATION 126
TABLE 53 220 / 110 KV SOKHUMI SUBSTATION 127
TABLE 54 220 / 110 KV TKVARCHELI PLANT AND SUBSTATION 128
TABLE 55 220 / 110 KV VARDNILI PLANT AND SUBSTATION 129
TABLE 56 ABKASIA SUB - TOTALS 130
TABLE 57 SUB - TOTALS AND TOTALS 131

1. Executive Summary

1.1 Introduction.

At the request of the U. S. Agency for International Development, Hagler Bailly prepared the "Electricity Market Metering Support Evaluation Report" (Report) to assess and identify technical needs of the Georgia Wholesale Electricity Market (GWEM).

This Report recognizes that a large World Bank (WB) and Kreditanstalt fur Wiederaubau (KfW) funded Electricity Market Support Project is likely to be implemented in 2001. The purpose of this report is to determine what, if any, additional assistance above and beyond the Electricity Market Support Project may be warranted.

Metering in this investigation includes the metering equipment and systems that are needed to collect and transfer the measurements from the field into a centralized data collection system at the Settlement and Billing Center (SBC) of the GWEM. In this investigation the metering includes the meters, meter test switches, current transformers, voltage transformers, cabling, test equipment, communications equipment, meter seals, computers hardware and software to track meter seals, technical assistance, etc.

The meters and metering equipment under consideration in this study are the meters at the substations and the generating plants. The meters and metering equipment under consideration in this study are not the revenue billing meters for residential, commercial and industrial customers.

Another purpose of this report is to present the principles of metering for the wholesale market, including interconnections between regions, at generating plants (the injections of energy into the wholesale market), to distribution companies, and to customer directly connected to the transmission grid. This report also presents a model of how the metering can be done.

1.2 Findings.

Work has been underway for several years to design the metering, communications, and data collection systems to support operation of the GWEM. Fichtner GmbH & Co. performed a study in 1999, quantifying necessary improvements in dispatch, control and communications. Funding by the WB and KfW is anticipated to implement the designs presented in Fichtner's report.

This Electricity Market Metering Support Evaluation Report seeks to identify any additional items that may be needed, beyond those already included in the Fichtner Report. It further assumes that the metering and telecommunications systems needs identified in the Fichtner Study will be funded to the level presented in the World Bank's February, 2000 Aide - Memoire.

Table 1 Summary of Recommended Measures and Technical Assistance, summarizes the items that have been identified. The rest of this Report provides more details on the items.

1. This report finds that a total of 489 three-phase metering installations are necessary for the wholesale electricity sector in Georgia; a number somewhat higher than the 360 installations identified by Fichtner.. Electrogadatsema (EG) has also provided an estimate (also noted in this

Report); however, the basis for its estimate , and the rationale supporting it, were not obtained from Satbobenergoinformatika and Electrodispatcherizatsia by the time that this Report was published. Further input from these organizations is needed.

2. The GWEM start up could be facilitated if supporting material was provided including: meter test switches, meter seals, meter seal tracking software and hardware, meter control cable, communications cable, and meter test equipment for the laboratory and for the field.

   The GWEM, EG, and the local distribution companies will be providing the local material and labor as well as space in the substations and generating plants for the equipment, power for the equipment, conduit, enclosures, modifications to buildings (wiring, walls, doors, etc.), junction boxes, concrete foundations, stanchions to hold CTs and VTs in the substations, etc.

3. Technical assistance is also recommended on the development of the Grid Code (already funded and underway); training on the installation and grounding of modern electronic systems in electric utility substations and generating plants; and, training on the receipt, storage, tracking and destruction of meter seals for high revenue, critical GWEM metering sites.

At this time this Report defers on recommending the purchase of new CTs and VTs. CTs and VTs, though they may develop an offset sometime in their life, are usually stable. That is, if a CT or VT is off in its accuracy, that offset is stable and a correction can be calibrated into the meter. Therefore, this Report recommends that CT and VT test equipment for the field (not the laboratory) be obtained for the GWEM so that the purchase and installation of new CTs and VTs (which are expensive) can be deferred in time and reduced in quantity as much as possible.

1.3 Summary Of Recommended Next Steps.

1.3.1 Review Of This Report.

This report needs to be reviewed by appropriate parties (listed alphabetically).

Development Organizations / Consulting Engineers:

- Fichtner GmbH & Co.
- Kreditanstalt fur Wiederaubau
- U. S. Agency For International Development
- World Bank

Georgian Counterparts:

- Electrodispatcherizatsia
- Electrogadatsema
- Georgia Wholesale Electric Market
- Satbobenergoinformatika

This Report is written based on information that is made available to us as of March, 2000.

1.3.2 Identify Sources of Funding for the Items Identified in This Report.

The Government of Georgia and funding agencies will need to determine the source or sources of funding for the items identified in this study. At present, no funding sources are identified.

1.3.3 Bidding, Procurement, and Implementation.

Assuming that funding for part or all of the recommended assistance is identified, the next steps will include the standard procedures of technical specification preparation, bidding, procurement, shipment and of course implementation.

Table 1 Summary of Recommended Measures and Technical Assistance

Report Section	Description Material	Approximate Quantity	Estimated Cost Per Unit Cost (US	Estimated Cost (US Dollars)	Comments
4.1.1	Revenue meters in support of the Wholesale Electricity Market, in addition to the 360 meters in the WB Aide - Memoire and the Fichtner Report.	129	$1,400.00	$180,600.00	Unit price of meter same as in Fichtner Report.
4.1.2	Meter test switches, 10 position, with sealable clear plastic cover.	489	$100.00	$48,900	One test switch for every meter in the GWEM (360 + 129). Speeds up the installation of the meters; deters tampering with the metering circuit.
4.1.3	Meter seals, serial numbered, non - toxic.	120,000	$0.25	$30,000.00	Provides enough seals for five companies and agencies to seal the meters five times. The allows for multiple entries in the first year or two.
4.1.4	Meter seal tracking program (software and hardware).	1 lot	$75,000.00	$75,000.00	For all five utilities and agencies involved.
4.1.5	Meter control cable. [4 conductors, # 10 AWG (4 square millimeters) each, 600 Volt class; with foil shield (copper or aluminum), and # 16 AWG tinned copper drain line].	100 km	$2,000/km	$200,000	To separate the metering and the relaying circuits and, because the existing cables are deteriorating.
4.1.6	Communications cable. [4 copper conductors, stranded, # 16 AWG (1.2 square mm each), with foil shield (copper or aluminum) and # 18 AWG tinned copper drain line; 600 Volt class].	30 km	$1,500/km	$45,000	For wiring the low voltage communications and telemetry circuits of the metering system.
4.1.7	Meter tester for laboratory.	1	$35,000.00	$35,000.00	For the Department that would test the meters in the substations.
4.1.8	Meter test equipment for field.	10	$10,000.00	$100,000.00	For the Department that would test the meters in the substations.
4.1.9	Current transformer field testing equipment. Up to 8,000 Amps.	1	$150,000.00	$150,000.00	For the Department that would test the CTs in the substations. To help locate which CTs are in need of replacement.
4.1.9	Voltage transformer field test equipment. Up to 220 kV.	1	$150,000.00	$150,000.00	For the Department that would test the VTs in the substations. To help locate which VTs are in need of replacement.
4.1.10	Additional test equipment.	Lot	Details provided elsewhere.		A list of equipment is provided in Table 11 Test Equipment Proposed By Electrogadatsema , page 45. No estimate of the price is available at this time.
4.1.11	Current Transformers - at 500, 220 and 110 kV stations. Depending upon results of CT testing the actual mix of CTs replaced may vary.		Details provided elsewhere.		Purchase of sets of CTs for a particular site should depend upon the outcome of the testing of the CTs now at that site using the CT test equipment in Section 4.1.9.

-11-

PREVIOUS PAGE BLANK

Report Section	Description Material	Approximate Quantity	Estimated Cost Per Unit Cost (US	Estimated Cost (US Dollars)	Comments
4.1.11	Voltage Transformers - at 220 and 110 kV stations. Depending upon results of VT testing the actual mix of VTs replaced may vary.		Details provided elsewhere.		Purchase of sets of VTs for a particular site should depend upon the outcome of the testing of the VTs now at that site using the VT test equipment in Section 4.1.9.
	Total – Material			$1,014,500.00	
	Description **Technical Assistance**				
4.2.1	Develop the metering components of the Grid Code for the Georgia Wholesale Electricity Market.	Under current Task Order			Define the procedures and the standards for meters, metering, sealing, testing, etc. of meters at plants, substations, and direct customers.
4.2.2	Training: Installation and Grounding of Electronic Meters.	For 50 people	$750	$37,500.00	Ten people per company or agency; five sessions, one session per company or agency.
4.2.3	Training: Meter Sealing Procedures.	For 50 people	$250	$12,500.00	Ten people per company or agency; five sessions, one session per company or agency.
	Total - Technical Assistance			$50,000.00	
	Total - Hardware Plus Technical Assistance			$1,064,500.00	

2. Existing Metering Infrastructure.

Task: General description of the existing Georgia metering infrastructure.

The Fichtner "Feasibility Study for Rehabilitation and Upgrade of System Dispatch, Communications and Metering[1]," January, 2000 Edition, Final Report, presents the status of the existing metering and the telecommunications system.

We agree that:

- The electromechanical meters are old, have wider than standard accuracy limits, and are in need of replacement.
- On – line automatic data collection of the meter readings does not exist, cannot be retrofitted to the existing equipment, and yet is needed for the proper performance of the GWEM.
- Computers are now used to process the data centrally, but all input is manually entered (resulting in time delays, errors in typing, etc.).

2.1 Meters.

Some of the meters are electromechanical meters, and the newer meters are electronic Alpha meters produced by ABB (assembled in the Moscow, Russia facility of ABB). The newer electronic meters can be incorporated into the new Meter Data Collection System.

The electromechanical meters are in need of replacement.

2.2 Telemetry.

There is no telemetry for meter data. It was never the practice under the pre - independence structure of the electric power sector to electronically or electrically send the meter register readings to a control center. No such telemetry channels exist.

The readings are forwarded from the generating plants to the control centers by persons phoning the readings up to the next level of the hierarchy of the dispatch system.

The existing telemechanical (Supervisory Control and Data Acquisition system) cannot be upgraded to handle the meter readings electronically. Electronic, on – line collection of the meter readings every hour (or every half hour) is needed for the GWEM to be effective.

In fact, the lack of a telecommunications infrastructure in the country presents the project team with a tough challenge. Essentially the telecommunications improvements identified in the Fichtner Study must be completed so that the metering data can flow reliably from the substations and generating plants to the

[1] Section 4.3, Page 4 – 11 of the Fichtner Study.

control centers. The public switched telephone system, in Hagler Bailly's judgement, is not reliable and economic enough to depend upon for the metering telemetry. By comparisons, in more developed countries the utilities, faced with this kind of project, would simply use an economic mix of in – house and public switched telemetry lines. In Georgia, the in – house lines are not reliable or are no longer in service (cables are open), and the public switched phone system (for example, cell phones on meters) is expensive when available.

2.3 Central Processing Of Meter Readings.

Centralized process of the meter readings is done with personal computers, but the phoned in meter readings must be manually entered.

3. Metering Requirements For the Electricity Market.

Task: Descriptions of the metering requirements to support the development of an electricity market in Georgia.

3.1 Measurements Collected.

3.1.1 Active (WH).

For the settlement and billing activities of the Georgia Wholesale Electricity Market the following measurements quantities are needed:

Watthours (that is, energy, consumption) delivered (out).
Watthours received (in).

These quantities may be scaled by such prefixes as kilo (kWh) and mega (MWh) to indicate the range of the readings. Within the metering data system of the power grid it is expected that both kWh and MWh will be used at the same time. For example, MWh for the generation at a large power plant, and kWh for the auxiliary load at a small hydro plant.

The directions "delivered" and "received" are relative terms, and the Grid Code of the GWEM needs to define the frame of reference. For a example, in one frame of reference a generating plant will deliver energy to the grid, and the grid will receive energy from the generating plant.

It is customary in the industry for the readings to be always non - negative, that is, they are either zero or positive. This practice is in keeping with the accounting practice of generally having non - negative entries in the accounts of the company.

Therefore, the electronic meters used will deliver two readings for each billing interval (say, 1 hour), one reading for the energy received, and another reading for the energy delivered.[2]

3.1.2 Reactive (VARh) (Optional).

[2] Years ago when electromechanical meters were used for interconnection and generating plant metering two meters would be used. Each meter would be 'detented' so that the disc could not turn backwards. One meter registered the delivered energy and the other meter registered the received energy. Of course, at any given moment the disc of only one meter could be turning. Both discs would not turn at the same time; however, in a billing period (say, 1 hour) you could have registration on both meters (for example, a tie line that floats between receiving and delivering during that billing hour).

Reactive quantities are not needed for the settlement and billing aspects of the GWEM. Such quantities would be:

Volt - Ampere Reactive (VAR) leading; and,
Volt - Ampere Reactive (VAR) lagging.

These quantities may be scaled by such prefixes as kilo (kVARh) and mega (MVARh) to indicate the range of the readings. Within the metering data system of the power grid it is expected that both kVARh and MVARh will be used at the same time; for example, MVARh at the higher system voltages, and kVARh at the lower system voltages.

The directions "leading" and "lagging" are relative terms, and the Grid Code of the GWEM needs to define the frame of reference.

If VARh readings were measured and collected it is customary in the industry for the readings to be always non – negative; that is, they are either zero or positive. This practice is in keeping with the accounting practice of generally having non - negative entries in the accounts of the company.

Therefore, the electronic meters used will deliver two readings for each billing period (say, 1 hour), one reading for the reactive energy leading, and another reading for the reactive energy lagging.

Reactive - hour readings (VARh) are not customarily used in the power industry since reactive energy cannot be stored in the power system (as active energy can be and is stored in the power system in the form of the energy of coal, oil, and hydroelectric reservoirs). Rather, the instantaneous power (or the hourly equivalent demand) quantities are used by the control centers to control the system voltage.

VARs leading (power, demand); and,
VARs lagging (power, demand).

3.2 Accuracy.

The accuracy of the measurements is expressed in two parameters, 'spread' and 'bias.'

3.2.1 Spread (Dispersion, Variance).

The 'spread' is how tightly the measurements are spread about the true value. This can be viewed as the variance of a probability distribution.

For the high capacity, high volume, high revenue accounts that are involved in the wholesale electric market as reasonably narrow a spread should be used as can be afforded. Typically, this would be expressed in the industry as IEC Class 0.2 or 0.1 metering, or ANSI Class 0.2 metering. Meters for these accuracy classes are available from many sources.

For very special accounts there are accuracy class 0.1 meters available and accuracy class 0.15 CTs and VTs available. At this time in Georgia it is not expected that there will be a need and justification for this high - precision class of equipment.

3.2.2 Bias.

The 'bias' of the metering system is any systemic offset in the readings from the true values.

A metering system (regardless of the voltage level, and use) should not have a known identifiable, and correctable, bias (offset) in the measurement.

Two examples of biases that can inadvertently (or intentionally) be in a metering system for a wholesale electricity market include:

1. Three element metering (using three line currents and three line to ground voltages) should be used for a four - wire circuit. If two element metering (using two line currents and two line to line voltages) is used to meter a four - wire wye circuit the meter would under - register.

2. The calibration settings of a meter should be set as close to zero error as practical. The calibration settings of a meter should not be biased in either direction (fast or slow).

3.2.3 Quantity Versus Quality Of Measurements.

It is important to recognize the relative merits of quantity (number of) of measurements versus the quality (accuracy) of measurements in an interconnected power pool.

The most important factor is to ensure that all of the segments of the power are measured; that is, all of the energy flows across the boundary (boundaries) of the power pool need to be metered and collected. Hopefully the meter readings will be collected on – line in real – time by some communication method.

If a particular path of energy into or out of a power pool is not metered, then that missing measurement manifests itself in the energy balance (auditing, checking) programs (software) as measurement error.

It is less important, at this stage of the development of the GWEM, to stress accuracy improvements given the importance of metering interconnections, generating plants, and direct customers of the GWEM.

Once the metering, data collections, settlement and billing system of the GWEM is up and running, the decision to upgrade metering (CTs, VTs, wiring, meters, etc.) to reduce measurement errors is a straightforward business decision: (1) how much is the error, and (2) is the amount of money lost due to the measurement error greater than the cost to upgrade the metering?

The Central Limit Theorem of statistics also supports the above emphasis on having meters in service in all of the locations initially, and then working to improve the accuracy of the metering. The Central Limit Theorem states:

If a random sample of size *n* is drawn from a population with mean μ and variance σ^2, then the sample mean, bar- X, has approximately a normal distribution with mean μ and variance σ^2/n. That is, the distribution function of :

$$\frac{\text{bar} - X - \mu}{\sigma/(\text{sqrt}(n))}$$

tends to a standard normal distribution function as n becomes very large and as n continues to infinity.

What this means in metering is that regardless of the probability distribution of the accuracy of the various devices in the metering system (CTs, VTs, wiring, meters, etc.), for a large number of meters (as we have in this interconnected power pool), the distribution of the error function for all of the measurements:

1. has a mean error of about μ, which for metering is about equal to 100% since each devices is tuned toward perfect registration (100.000%); that is, each device is tuned toward having no error (0.000%); and,

2. the variance (or standard deviation) becomes smaller as *n*, the number of meters in the system increases.

To say it another way, since metering equipment (CTs, VTs, wiring, meters, etc.) in the metering system tend toward perfect registration (zero error) for the large number of meters in the system, the overall system error is very small. Said another way, since some of the metering equipment runs fast, and since some of the metering equipment runs slow, the long term average errors (of the sum or of the difference of the measurements) tend to cancel out.

The impact for this project is that more emphasis should be placed upon having all of the interconnection points and generating plants metered, rather than spending money on improving the accuracy of a few metering sites (at the expense of not installing the meters at the remaining sites). In other words, we can defer to later the task of changing out the CTs and VTs that are out of acceptable accuracy ranges.

3.3 Time Synchronization.

3.3.1 Period.

The meters measure instantaneous power, integrate the power over some time period, and then present an energy reading (the time - integral of the instantaneous power) to the control centers.

The GWEM Rules will define this time period. It is usually a time period such as 60, 30, or 15 minutes. This time period matches the time periods in the wholesale market contracts for generating, buying, selling, and using energy.

Time periods smaller than 15 minutes are technically possible, but are operationally questionable. Thermal generating plants cannot change their operating points that fast, and hydro electric generating plants are usually dispatched on water level and / or frequency rather than economic optimization.

Furthermore, as the time period becomes smaller, the measured energy in the time interval would be influenced more by the response of the units to system frequency, if the units are participating in frequency regulation.[3]

3.3.2 Accuracy.

There is also an accuracy upper limit associated with the ending of each time (60, 30, or 15 minute) period. The following table presents some suggested tolerances on the dissemination of time in the metering data system.

Table 2 Accuracy Bounds On the Time Synchronization Pulses

Nominal Billing Time Period	Accuracy Class 0.3 Metering (plus or minus seconds)	Accuracy Class 0.2 Metering (plus or minus seconds)
60 minute	10.80	7.20
30 minute	5.40	3.60
15 minute	2.70	1.80

Fortunately, the dissemination of time signals (sometimes called the "freeze pulses," or "freeze commands") is neither difficult nor expensive if the need is recognized at the beginning of the project and if the need is conveyed to the supplier(s) of the meters, the Meter Data Collection System, and the Supervisory Control and Data Acquisition System.

In normal operating mode the freeze command should be sent from the master computer of the Settlement and Billing Center (SBC) each billing time period. As a back up mode each meter, or the Meter Data Collection System (MDCS) Remote Terminal Unit (RTU) at the substation or generating plant, should initiate the freeze command locally if the freeze signal does not arrive within a set time (say, 30 seconds) of the expected arrival time. Most modern electronic meters and MDCS RTUs support this function.

Generally, each remote meter should not be left to asynchronously run apart from the SBC (or other comparable, reliable time reference, for example, a satellite providing a time signal).

Errors in the dissemination and use of the time synchronization for freeze commands are comparable to errors in the CTs, VTs, and the meter themselves. In other words, those concerned about a 0.3 % error in the CT should be equally concerned about an 0.3% error in time of the dissemination of the hourly freeze command.

[3] We understand that at this time the generating units in Georgia are not participating in frequency control; rather, frequency regulation in Georgia is handled (by agreement between Georgia and Russia) by the generators in the adjacent, interconnected Russian power system. However, this could change in the future.

3.4 Time Frame For Polling.

If the energy readings from the meters are used by the National Dispatch Center in the next (adjacent) time interval then the meter data must be collected from all of the meter data RTUs quickly. For example, say, in the first 15% of the next demand interval.

The readings have to be collected quickly enough so that decisions can be made for dispatching generating units (or the shedding of load) in the present or subsequent demand interval.

If the energy readings from the meters are used only by the SBC of the GWEM for settlement and billing, then the meter readings can come in more slowly; that is, in this case the readings are not needed in near real - time.

The National Dispatch Center (NDC) and the Settlement and Billing Center need to coordinate this technical specification in the bid documents for the Supervisory Control and Data Acquisition System (SCADA) and Energy Management System (EMS) system for the NDC and the MDCS for the SBC.

Table 3 Time Period For Data Collection After a Demand Interval

Line	Demand Interval	15 % of demand interval time period
1	15 minutes	2 1/4 minutes
2	30 minutes	4.1/2 minutes
3	60 minutes	9 minutes

As can be seen from Table 3, the readings from the meters in the field do not have to come in very rapidly, but they should be collected in a timely fashion. Also, the polling time should take into account re - reading a meter that was not able to respond the first time the read request was issued by the central computer at the SBC.

3.5 Location Of Metering Points.

The definition of the interconnecting transmission grid depends upon how the distribution companies will be privatized. Since the energy metering has to be established at all interconnection points between the transmission system and the distribution companies, the generation companies and the distribution companies, between the different distribution companies, the auxiliary power at substations that is used to run the substations, and the auxiliary power at substations that is delivered to (or used for) non - substation purposes (stores, apartment buildings, etc.), it is at present not possible to define the metering points in detail. Therefore, an estimate on the number of metering points has been prepared based upon the principles described below.

These meters are special electronic meters which can be read over the communications channel from the SBC. These are not the usual residential, commercial and industrial meters used for revenue metering of the residential, commercial, and industrial customers.

Figure 1 Energy Segments Of the Wholesale Electricity Market, for a generalized view of the flow of energy into and out of the GWEM.

It is possible to meter all of the energy flows into and out of the GWEM except for two:

- Internal technical losses (I**2Rt, kWh, heating); and,
- Unauthorized use of energy (theft, diversion, etc.).

The internal technical losses can be estimated accurately and reliably. In fact, experience shows that the accuracy (uncertainty) on the estimated losses (developed through planning studies) is about the same as the accuracy (measurement error) obtained when deliveries are subtracted from purchases on the power system (when it is known that there are no unauthorized uses, theft, diversion, etc.).

That leaves the Unauthorized use of energy category. To the extent that all of the other energy flows are measured, and a confident estimate of the technical losses exists[4], a measure of unauthorized uses of energy (theft, etc.) is simple to derive.

If the measured energy flows are missing or are very inaccurate, then it is difficult to assess the magnitude of the unauthorized uses of energy.

[4] The Economic Dispatch Function of the new energy management computer system for the NDC should be able to tell the SBC each hour the estimated losses (kWh) on the dispatched transmission system. This information comes out of the B – Matrix and its coefficients in the economic dispatch algorithms. That is, the internal technical loss estimates (kWh) are available to the SBC for each hour if the SBC asks for them, and if the feature was specified in the technical specification for the Economic Dispatch Function of the NDC.

Figure 1 Energy Segments Of the Wholesale Electricity Market

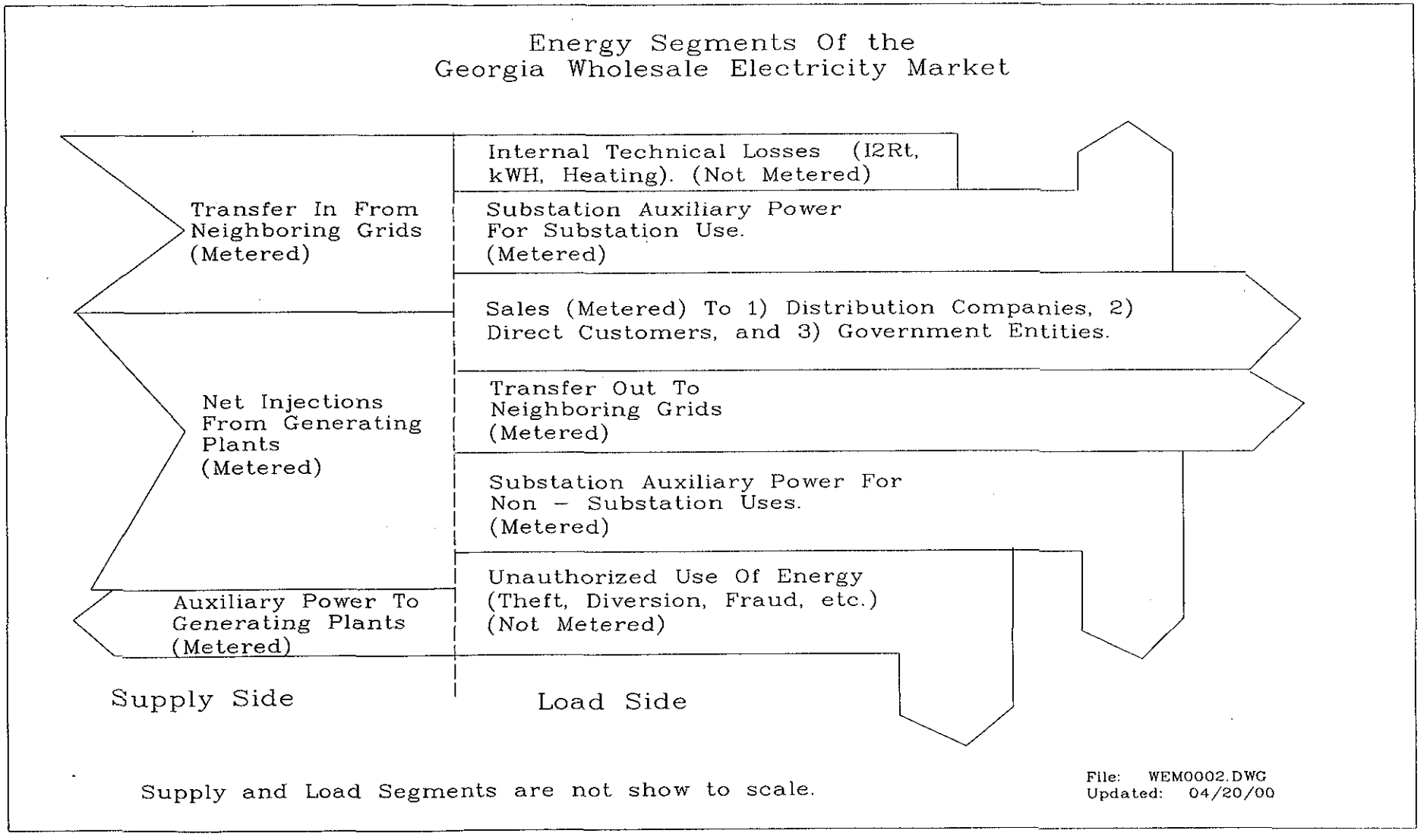

PREVIOUS PAGE BLANK

Figure 2 A Transmission System View Of the Georgia Wholesale Electricity Market

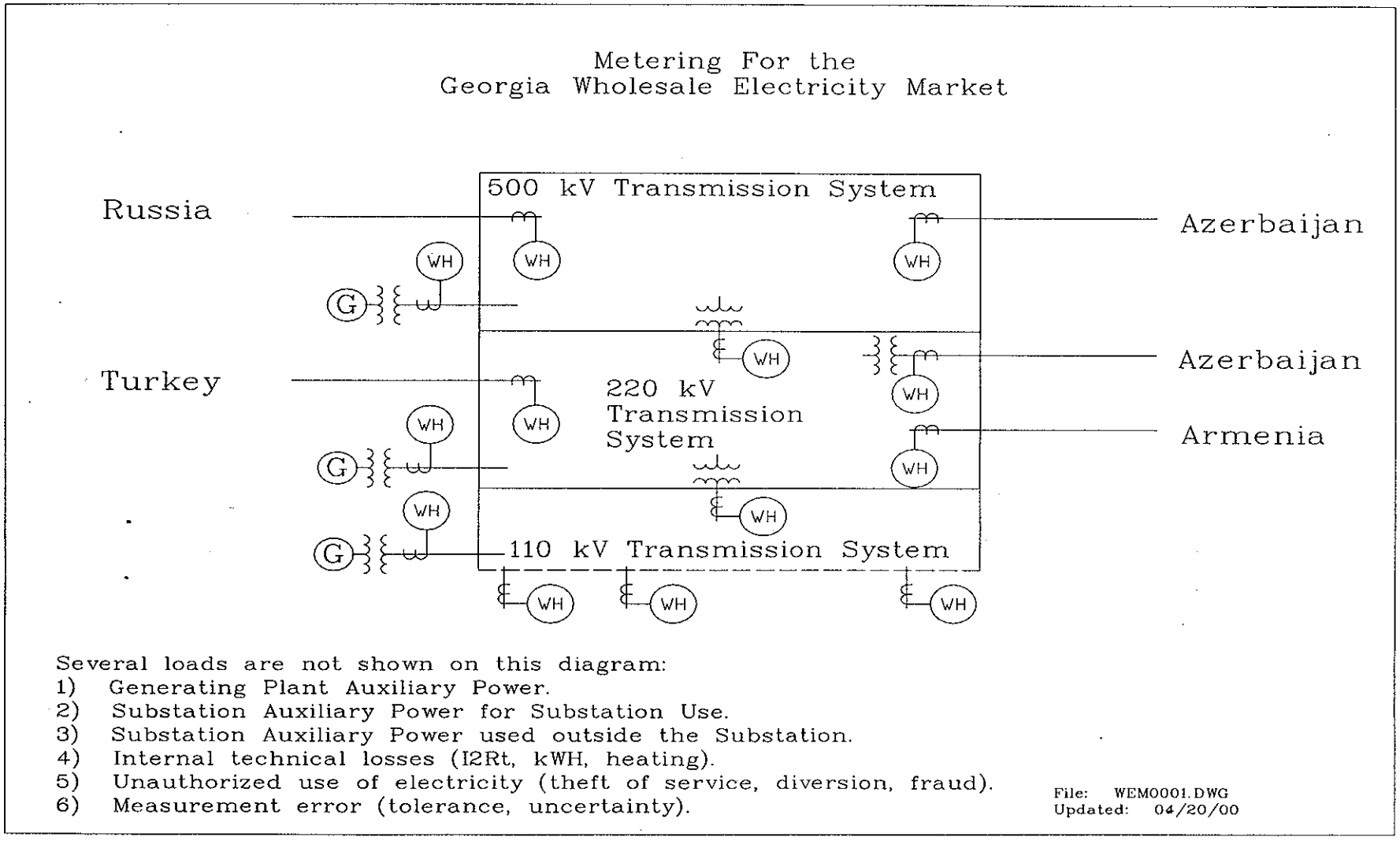

3.5.1 Philosophy Of Metering Points.

Figure 2 A Transmission System View Of the Georgia Wholesale Electricity Market, provides an overview of the transmission system of the GWEM.

The following sections present the rationales when metering is needed at various points in the transmission system.

3.5.1.1 From a Generating Unit to the Transmission Grid.

At the generating stations, the energy output (net injection into the grid) of every generator unit is to be metered.

This metering could occur on the high side of the generator step up (GSU) transformer; that is, the generating company is responsible for the losses and the excitation of the GSU transformer bank. Or, the metering could be done on the high side and then compensated to the low side. In this later case, the transmission grid company would be responsible for the losses and excitation of the GSU bank.

Figure 5 Measuring Energy (kWh) Used by Power Plant Auxiliaries, for a sketch of how this generating station metering is accomplished. Other metering schemes are also possible.

3.5.1.2 To Generating Stations from the Transmission Grid.

At generating stations, the energy (net taken from the grid) of the entire power station is to be metered.

This metering would be on the high side of the generating station auxiliary transformer. However, the high side of the generating station auxiliary transformer may be on the low side of the GSU bank. Therefore, the reading from the meter on the high side of the auxiliary power transformer must be compensated to the high side of the GSU[5]. This compensation (a mathematical procedure) is performed automatically by some modern electronic meters.

At the Settlement and Billing Center, the following two conditions must be recognized and handled by the SBC system.

1. When the power station is not generating, then the generating station is purchasing power from the transmission grid.

2. When the net generation of the generating station into the grid is greater than zero, then the generating station is supplying its own auxiliary power and the generating station is not buying power from the transmission grid.

[5] Instead of compensating the meter reading in the meter, the GWEM and the generating company could agree upon a fixed rate adjustment (say, 0.5 percent) to take into account the copper losses through the GSU transformer bank, plus a fixed amount to account for the iron excitation losses.

Figure 5 Measuring Energy (kWh) Used by Power Plant Auxiliaries, provides sketches of three ways the auxiliary power metering is accomplished. Other metering schemes are also possible.

3.5.1.3 Interconnections With Other Countries.

The interconnections with other countries should be metered. This includes the following lines.

Table 4 Interconnections With Neighboring Countries

Voltage Level	Name of Interconnection (Between the Georgian substation and the neighboring country.)
500 kV	Between Enguri and Russia.
500 kV	Between Ksani and Azerbaijan.
220 kV	Between Batumi and Turkey.
220 kV	Between Gardabani and Armenia.
35 kV	Between Gardabani and Turkey.

These interconnections were not mentioned in the metering points enumerated in the Fichtner Study, but are include in this report.

3.5.1.4 500 and 220 kV Substations.

In 500 kV and 220 kV substations every transformer low voltage winding is already metered.

The effect of this is that all flows between the 500 and the 220 kV grids are metered, and all flows between the 220 and the 110 kV grids are metered. Further, the transformer bank losses are part of the high voltage level.

3.5.1.5 110 kV Feeders Leaving 220 kV Substations.

The Fichtner Report mentions that the MDCS should be sized to handle ten additional 110 kV feeders out of the station. It is not clear whether these meters are included in the 357 meters counted in the Fichtner Report. Hagler Bailly has included these meters in this analysis.

3.5.1.6 110 kV and 35 kV Lines Between Distribution Companies.

These meters are mentioned in the Fichtner Report, but it was not clear whether these meters were included in the count of 357 meters. Hagler Bailly has included such meters in this Report.

3.5.1.7 Between Small Generating Stations and Distribution Companies.

These meters are also mentioned in the Fichtner Report, but it is not clear if these meters are included in the 357 meters counted. They are included in this Report.

3.5.1.8 From the Transmission Grid to Direct Customers.

There are some customers in the country that are served directly from the transmission grid and not by way of the distribution companies. The billing for these direct customers comes from the GWEM and not through the local distribution company.

The revenue meters that measure the energy passing from the transmission grid to the direct customer must be read every hour (or 30 minutes, or 15 minutes) like the other interconnection meters. Else, the technical and the non - technical losses in the GWEM will appear high.

3.5.1.9 Substation Auxiliary Power Used By the Substation.

These meters are not mentioned in the Fichtner Report, and it is not clear whether they are included in the 357 meters counted in the Fichtner Report; they are reflected in this Report.

In the absence of any additional information, Hagler Bailly assumes that (for each voltage level, for example, 110 kV substation) there is one substation auxiliary power transformer that needs to be metered. If there are more such circuits used in the substation, then the number of meters (and associated CTs, VTs, wiring, etc.) will need to be increased.

3.5.1.10 Substation Auxiliary Power Used For Non - Substation Purposes.

These meters are not mentioned in the Fichtner Report, and it is not clear whether these meters are included in the 357 meters counted in the Fichtner Report.

In the absence of any additional information Hagler Bailly assumes that (for each voltage level, for example, the 110 kV substation) there is one circuit of power leaving the substation that goes to neighboring commercial, residential, industrial, and government / budgetary customers. If there are more such circuits leaving the substation, then the number of meters (and associated CTs, VTs, wiring, etc.) will need to be increased.

3.5.1.11 Between Distribution Companies.

The energy flowing between distribution companies needs to be metered.

The interconnections between distribution companies have not been identified.

This energy flow between distribution companies is energy flow that is not through the transmission system of the GWEM; rather, these are interconnections between the distribution companies. Usually the nominal service voltage of these interconnections is low (6 kV, 10 kV, etc.).

Ideally these metering sites will be electronically connected to the SBC of the GWEM for on – line, real – time collection of the readings. It may not be practical or economic to install the communication equipment and circuit needed for the on – line, real – time operation of a metering site at this time. In this case the metering should be installed at the site and read as often as practical.

If these readings from the interconnections between the distribution companies are not collected each hour (half hour, or fifteen minutes), then the energy (kWh) that is not reported by the meters skews the hourly (half – hourly, fifteen minute) energy balance calculations of the SBC. For interconnections that carry small amounts of energy this error is small and acceptable, but as the interconnection between the distribution companies carries more energy, the error at the SBC becomes noticeable and unacceptable. Hence, these low voltage interconnections between distribution companies need to be metered and should be read on – line in real – time along with the high voltage interconnection meter readings.

3.5.1.12 Defining Boundaries Within the Transmission Grid (Optional).

Regions can be defined within the transmission grid by installing revenue class watt-hour metering at select locations. The energy balance (sum of the energy in should equal the sum of the energy out) in these regions can be used to check the integrity and accuracy of the metering system in that region.

Table 5 Interconnections Between Regions Of the GWEM, shows the regions that could be created, and the metering that is required to create the boundaries.

Table 5 Interconnections Between Regions Of the GWEM

Line	Interface	Interconnection Metering Located At
1	Abkasia – West	At Vardnili, on the 220 kV line to Tkvartcheli
2	West - Central	At Zestafoni, on the 500 kV line to Ksani, and on the 220 kV line to Kashuri.
3	To AES Telasi	These metering points are already defined and known by the joint working group of SBC and AES Telasi metering personnel.
4	Central – East	At Gurdjani, on the 220 kV line from Rustavi, and on the 100 kV lines from Jinvali, and the 110 kV line from Sagarejo; and, on the 110 kV line from Sagarejo to Sighnaghi.

Other regions can be defined. The regions are defined by SBC, ED, and EG to help audit and check the metering, and to help troubleshoot[6] metering problems when the metering and billing system is operating.

3.5.1.13 Completely Encircling a Substation (Optional).

If all of the transmission lines and transformer banks in a substation have revenue metering connected to them, then it becomes possible to compare hourly, daily, weekly, etc. the sum of the energy entering the substation with the sum of the energy leaving the substation. This check helps to locate metering equipment that has failed or is drifting.

This check can be programmed into the SBC computer system and a exception report created by the SBC computer system for further investigation.

Because of uncertainty in the metering equipment, short duration checks (say, each hour) may show some variability (random error of the measurement, and random error of the freeze pulse timing). However, as the duration of the test period increases (say, to 3 hours, 6 hours, 12 hours, daily, weekly, monthly, etc.) the uncertainty in the check readings should reduce; that is, confidence in the results will increase. That is, the Central Limit Theorem comes into play - the longer the time period and the more readings that are taken, the uncertainty (tolerance) decreases.

3.5.2 Number of Metering Points.

There are several estimates of the number of meters that are needed to measure the GWEM.

[6] For example, at the SBC an energy audit for the hour may indicate that there is a metering error (problem, malfunction, etc.) somewhere in the GWEM metering system. By having several regions the problem can be further confined to one or two (adjacent) areas. By reducing the size of the problem fewer people are involved in troubleshooting the problem, and the problem can be located and fixed more quickly.

At the same time more work is needed, including:

1. Define the boundaries between generating plants, the transmission grid, the distribution companies, and the customers connected directly to the transmission grid.

2. Identify the metering points, and the number of meters needed.

This work is underway in Georgia among personnel of ED, EG, the GWEM, and Satbobenergoinformatika, but the details have not yet been finalized.

3.5.2.1 Fichtner Study About Dispatch.

The Fichtner Study on Dispatch, Communications and Control was completed in the Fall of 1999. This is the base case study upon which the rest of the studies build. This Fichtner Study appears to be the basis of the Aide - Memoire discussed in the next Section.

We assume (and recommend) that the funding program and requirement identified in the Fichtner Study be approved and implemented. The needs identified in this Report are in addition to the equipment and systems defined in the Fichtner Study.

The Fichtner Study identifies and lists 357 meters needed and assigns the meters to specific generating plants and substations.

3.5.2.2 Aide - Memoire, February, 2000.

The Aide - Memoire of February, 2000 talks about 360 meters needed for the GWEM.

We deduce that the Aide - Memoire took the 357 meters mentioned in the Fichtner Study and added 3 meters to make an even 360 meters.

3.5.2.3 Hagler Bailly Study.

In March, 2000, Hagler Bailly worked with the personnel of GWEM, ED, EG, SBEI, SBC, etc. to further define the metering needs of the GWEM. An additional 129 meters were identified as needed. However, the work of March, 2000 indicates that the actual count is not yet finalized.

Electrogadatsema indicates that a better, more accurate count of meters is being developed. Electrodispatcherizatsia and Satbobenergoinformatika also need to questioned further on their perception of the metering needs.

3.5.2.4 Electrogadatsema Study.

Ms. Makhvala Kandaria and her staff have provided Hagler Bailly with an estimate of the number of meters needed. Table 6 Additional Meters Identified by Electrogadatsema, shows the additional metering needs according to Electrogadatsema.

Table 6 Additional Meters Identified by Electrogadatsema

Line	Fichtner Study (Base Case)	Additional Meters Identified by EG	Description
1	277		High voltage metering sites.
2	80		110 kV lines and transformers of 500 and 220 kV substations.
3		80	35, 10, and 6 kV lines and transformers at 110 kV substations.
4		250	After consolidation of distribution companies these meters are needed at 40 110 kV substations[7].
		40	Measure the substations own internal load.
5		60	Measure the load of customers and other loads at substations that are not the substations own internal load.
6			Direct customers served from the transmission system (the number has not been identified at this time).
7	357	430	Total

Not mentioned by EG are those customers served directly from the transmission system. Such customers are indicated in Line 6 in the Table.

3.5.2.5 Electrodispatcherizatsia.

Electrodispatcherizatsia has yet to respond on their perceived metering needs. Additional effort should be made to gain their views.

3.5.2.6 Satbobenergoinformatika Study.

Although information has not yet been provided by Satbobenergoinformatika, they will likely provide the most meaningful numbers, since we understand that they are the group that is working on the metering, data collection, and computer systems for the SBC of the GWEM. We also understand that they are the driving force in the working group of persons from ED, EG, and the SBC working on the metering for the GWEM.

[7] Before consolidation of the distribution companies, 570 meters would be needed.

Table 7 Several Estimates Of the Number Of Meters Needed For the GWEM

Line	Study	Fichtner (Base Case)	Aide - Memoire	Hagler Bailly	EG	ED	SBEI	Total
1	Fichtner Study	357						357
	Aide – Memoire		360					360
2	Hagler Bailly Study (this Report)		360	129				489
3	Electrogadatsema (EG) email.	357			430			787
4	Electrodispatcherizatsia (ED)							
5	Satbobenergoinformatika (SBEI)	357						

Note: Information from Electrodispatcherizatsia and Satbobenergoinformatika has not yet been received.

4. Upgrades, Replacements, and / or Additions.

Task: Specific upgrades, replacement, and / or additional metering equipment required for the Republic of Georgia to support the development of an electricity market.

4.1 Material.

4.1.1 Revenue Meters For Substations and Generating Plants.

In addition to the 357 meters noted in the Fichtner Study, Hagler Bailly has identified an additional 129 meters needed for the GWEM. Each of the 360 and the additional 129 meters is tabulated in Annex 5 Meters Listed By Generating Plants and Substations.

Technical specifications will need to be developed for this equipment so that competitive bids can be received, but in general we are proposing a product such as the ABB multi – function electronic Model Alpha and Model Euro – Alpha meters that are presently being used in Georgia.

4.1.2 Meter Test Switches.

Meter test switches are installed near the meter. The switch separates the meter from the secondary wiring to the CTs and VTs in the substation and generating plant.

Meter test switches help advance the project in several ways.

1. Ease of installation: Meter test switches can be installed in the substation and the generating plant at the next convenient outage of the primary and secondary circuit. The VT portion of the test switches are left open; the CT portion of test switches are left shorted (bypassed). The meter is not even installed at the site at this time. At some later time, while the primary and secondary circuit is in service the meter can be installed at the site (without having to request an outage of the circuit from system dispatch at the control centers).

2. Ease of maintenance while in service: While the primary and secondary circuits are in service, the meter can be isolated from the circuit and tested off line. As above, an outage of the primary circuit does not have to be requested from system dispatch.

   With some test equipment the CTs can be tested from the test switch without having to lift the wiring. This provides both safety and time savings advantages.

3. Revenue Protection: The meter test switch comes with a cover that can be sealed.

   a) The sealed cover makes it more difficult to steal electricity by tampering with the circuit; and,

PREVIOUS PAGE BLANK

b) the cover cannot be installed and sealed with any of the test switches open, that is, it is harder for a meter maintenance person to inadvertently leave the metering site with one or several of the parts of the metering circuit deenergized (VTs open, or CTs bypassed).

Technical specifications will need to be developed for this equipment so that competitive bids can be received, but in general we are proposing equipment such as the Model 110 – 54924 10 – position test switch with sealable cover by Meter Devices, Inc.

4.1.3 Meter Seals, Serial Numbered, Non - Toxic.

The new metering installations need to be sealed. This includes the meter, the meter enclosure, the test switch cover, any and all junction boxes in the secondary circuit, and the cover plates of all CTs and VTs. All of these locations need to be sealed because a person can tamper with or affect the accuracy of the metering at each of these locations.

There is an health and environmental issue involved. The existing metal lead seals are toxic; heavy metal poisoning results when the metal is absorbed into the human body or by animals. It is suggested that when the new metering equipment is installed non -lead meter seals be used.

The old lead meter seals removed from service, from inventory, and from the meter shop should be destroyed in an environmentally approved method. Depending upon how heavy metals are regulated in Georgia, the matter of the meter seals could be addressed in the Environmental Action Plan for the Transmission Network, or the matter could be addressed as a Hazardous Materials matter.

Table 8 Number Of Meter Seals For Each Agency (For 489 GWEM Meters), shows the number of meter seals that should be procured for each agency. The number of seals in this table is based upon 489 meters being used in the GWEM. The number of seals in the table should be scaled up or down if the number of meters used in the GWEM is higher or lower.

Table 8 Number Of Meter Seals For Each Agency (For 489 GWEM Meters)

Line	Agency	Number of Seals
1	Georgia Wholesale Electricity Market / Satbobenergoinformatika	30,000
2	Electrogadatsema	30,000
3	Electrodispatcherizatsia	30,000
4	Distribution Companies	30,000
5	Total	120,000

A technical specification will be developed later for the bidding and purchasing, but in general we are proposing a meter seal such as the Roto – Seal by E. J. Brooks, and the Twist – Tite Wire Seal by Inner – Tite. Key features needed are:

1. The long, thin, metal (conductive, but acceptable) or Kevlar (non – conductive, and preferred) cable that enables several (two, three, etc.) companies, agencies, utilities to install their own seal on the metering equipment.

   Note that the ability is needed to have several sealing devices use the same hole in the meter, the enclosure, the cover plates, the enclosures, etc.. This is a meter sealing requirement that is different than that found in residential, commercial and industrial metering of a distribution company, where only the utility's one meter seal is installed.

2. Each seal must have a unique serial number and the unique serial number must be repeated (also appear) in two places on the Roto / twist wire seal including:

   a) On the body of the seal that stays at the metering site; and,

   b) On the tab (wing nut) that is broken off of the Roto seal / twist – wire seal by the installer after the installation is complete (the meter person brings this tab back with the paper work so that the unique serial numbers used at the metering site can be easily loaded into the meter seal tracking software).

Table 9 Details Of How the Number Of Meter Seals Is Estimated

Line	Placement, Location	Number Per Site	Total Meters in GWEM	Total Number Of Seals	Number Of Utilities and Agencies Sealing This Site	Total Number Of Seals For Initial Sealing	Provide Enough Seals For Five Sealings.	Total
1	At Meter	1	489	489	4	1,956	5	9,780
2	At Test Switch	1	489	489	4	1,956	5	9,780
3	At CTs	3	489	1,467	4	5,868	5	29,340
4	At VTs	3	489	1,467	4	5,868	5	29,340
5	At meter enclosure	1	489	489	4	1,956	5	9,780
6	Junction boxes	3	489	1,467	4	5,868	5	29,340
7	Total	12	489	5,868	4	23,472	5	117,360

Notes:

1. Each seal has the name (mnemonic, or acronym) of the utility to which the seal is given.
2. Each meter seal has a unique serial number on the body of the seal and on the tab (wing nut) that is broken away after installation.
3. The type of seal has to be such that up to four utilities, companies, or agencies can install their seal on the meter.
4. The purchasing specification should require that the seals be made of non – toxic material; that is, lead seals will not be permitted.

PREVIOUS PAGE BLANK

4.1.4 Meter Seal Tracking Software and Hardware.

For these high revenue, critical accounts it is recommended that the GWEM track the meter seals from the time that the seals arrive from the manufacturer, through the meter shop, through the installation in the field, to the return of the meter seal to the meter shop after the seal is used in the field, to the destruction of the seal by the meter shop personnel in the meter shop.

This tracking work is facilitated by laptop computers for the field personnel and a host computer in the meter shop.

A technical specification will be developed later for the bidding and purchasing, but standard, off the shelf hardware and software that is used by meter shops to track meter seals, meters, CTs, VTs, etc. can be used for this project. In this case the system allows the GWEM and the utilities to only track the meter seals used on the GWEM.

This system is not proposed to track the residential, commercial and industrial customers of the distribution companies.

4.1.5 Meter Control Cable.

Under the pre – GWEM regime, metering and relaying equipment often shared the same secondary circuits (100 Volts, 5 Amps).

In the GWEM regime there are two problems with this design:

1. The burden of the metering and the relaying on the secondary circuit often burdens the CTs and the VTs so much that the metering is operating outside of its accuracy class.

2. Many people have access to the CTs, the VTs, and the wiring, which makes security of the metering circuit difficult. That is, there are (1) many ways for person to alter the metering to steal electricity without being detected, and (2) maintenance problems on the non – metering equipment can compromise the metering.

Therefore, is it recommended that wherever possible, revenue metering be installed on dedicated CT and VT cores.

This rewiring of the CT and VT secondary circuits requires additional meter control cable and procurement of such cable is included in Hagler Bailly's recommended plan.

A technical specification will need to be developed for the bidding and purchasing, but in general we propose four conductors, four square millimeters each (about a # 10 AWG, copper conductors, stranded conductors, 600 Volt class insulation level, with foil shield - either copper or aluminum - with a # 16 AWG tinned copper drain line, sunlight resistant outer jacket, and sunlight resistant insulation on each of the wires in the cable).

PREVIOUS PAGE BLANK

The length of cable to be purchased was estimated as follows:

1. The number of meters in the project equals 489 (360 from the Aide - Memoire and 129 from this Study);

2. The estimated average run (length) is about 100 meters (approximately 300 feet) from the meters to CTs and VTs in the substation yard or generating plant; and,

3. Two cables are needed including one four conductor cable for CT signals, and the another four conductor cable for VT signals.

The amount of cable needed is about 97.8 kilometers (rounded to 100 kilometers in our recommended plan).

4.1.6 Communication Cable.

The modern electronic meters will be connected to the telecommunications equipment. These circuits should be protected wire and cable designed for the application.

A technical specification will need to be developed for the bidding and purchasing, but in general we are proposing four conductors, 1.2 square millimeters each (about # 16 AWG), copper conductors, stranded conductors, with a foil shield (either copper or aluminum) with a # 18 AWG tinned copper drain line, 600 Volt class insulation. Sunlight resistant outer jacket, and sunlight resistant insulation on each of the wires in the cable is also preferred.

The length of cable to be purchased was estimated as follows:

4. The number of meters in the project equals 489;

5. The estimated average run (length) is about 30 meters (approximately 100 feet) from the meters to the MDCS RTU in the substation control house or generating plant control room; and,

6. Two cables are needed including one four conductor cable for meter data signals, and another four conductor cable for telecommunications signals.

This comes to about 29.3 kilometers of communications cable.

4.1.7 Meter Test Equipment for Use in the Laboratory.

One laboratory meter test kit should be obtained to test the meters in the laboratory.

4.1.8 Meter Test Equipment for Use in the Field.

Three meter field test kits should be obtained to test meters in the field.

4.1.9 CT and VT Test Equipment for Use in the Field.

It is recommended that CT and VT test equipment be obtained to test CTs and VTs in the field. The results of the field testing of the CT s and VTs in the Georgian power system can be used in two ways.

1. To load (that is, input, install) the ratio and phase angle correction factors for the CTs and the VTs into the meters[8] to compensate[9] for the errors in the CTs and VTs.

2. To justify the economic reasons for replacing CTs and VTs .

The first of the two uses above works because for most CTs and VTs the ratio and phase angle errors are constant over time. That is, even if the CT or VT is outside of a desirable accuracy band, the error is likely to remain fixed for the life of the CT or VT. It takes a severe event (such as dropping a CT or VT on the ground, a lightning strike, a nearby fault on the power system) to cause the accuracy of the CT or VT to shift.

Compensating for the CT's and the VT's ratio and phase angle errors in the meter eliminates the need in many cases to replace the CTs and VTs. This can be a substantial financial savings for this project since CTs and VTs for the voltage ranges (10 kV, 35 kV, 110 kV and 220 kV) involved in this project are expensive to purchase, expensive to ship, and expensive to erect (concrete, steel, rigging crew, etc.).

The second of the two uses above helps identify those CTs and VTs that need to be replaced. For example, repeated testing indicates that the accuracy readings drift and shift over time (for example, summer, fall, winter and spring).

This equipment has to be transportable to the field in a truck since it is not practical to bring the CTs and VTs back to the laboratory for testing.

---

[8] The electronic meters presently used in Georgia do not have the ability to load in the correction factors; the newer versions of these electronic meters may have this capability. Electromechanical meters have always had the ability to accept the correction factors by virtue of the adjustments to the full load, light load and power factor adjustments.

[9] An industry standard (accepted) method to determine these CT and VT correction factors is presented on pages 308 to 323 of the Handbook For Electricity Metering, Ninth Edition. These pages also include the forms and sample calculations. The Handbook is published by the Edison Electric Institute, 701 Pennsylvania Avenue, Northwest, Washington, D.C. 20004 – 2696. Copyright 1992.

4.1.10 Additional Test Equipment.

Electrogadatsema has identified additional metering test equipment that they would like to obtain. This equipment is listed in Table 11 Test Equipment Proposed By Electrogadatsema. However, Hagler Bailly needs to examine this request further to determine whether procurement is in fact advisable.

4.1.11 New CTs and VTs (Optional).

This Report recommends providing the test equipment to do the CT and VT testing in the field. At a later time, following the testing, it may become justified to replace some of the CTs and the VTs.

Table 10 Typical Prices For New, Single Phase CTs and VTs presents some typical prices for CTs and VTs. These are for new units, single phase (that is, three units are needed per metering site), delivered to a warehouse in the US by the manufacturer. These prices do not include shipping, erection, the concrete foundation work, the steel stanchion work, etc.

Table 10 Typical Prices For New, Single Phase CTs and VTs

Line	Nominal System Voltage (Line to Line)	Current Transformers. Estimated Price, New, Single Phase (3 are needed per metering site), US Dollars.	Voltage Transformers. Estimated Price, New, Single Phase (3 are needed per metering site), US Dollars.
1	500 kV	-----	-----
2	220 kV	US$10,000	US$20,900
3	110 kV	US$5,500	US$11,500
4	69 kV	US$3,300	US$6,800
5	35 kV	US$2,500	US$3,500
6	10 kV		US$480 (really a 15 kV unit)
7	6 kV		

Table 11 Test Equipment Proposed By Electrogadatsema

Line	Name / Description)	Typical Make and Model	Quantity	Unit Price	Total Price
1	Voltmeters, 0 to 600 Volts.		2		
2	Voltmeters, 0 - 75 Volts.		2		
3	Micro - Ampere Meter.		2		
4	Laboratory phase regulator, single phase.		1		
5	Set of equipment.	K513, 514, 515	1		
6	Laboratory auto-transformer "Latri", 9 Amp capacity.		2		
7	Voltage regulating transformer, 20 Ampere capacity.		1		
8	Tester (electronic).		2		
9	Laboratory Voltmeters, 377?		3		
10	Frequency Controller.		2		
11	Volt - Ampere Phase Meter.		1		
12	6 to 10 kV Voltage Indicator		2		
13	Voltage Transformer, NOM - 10		2		
14	Equipment metering an alternating resistance.		2		
15	AND - 70 Type Equipment.		1		
16	Equipment for measuring humidity in the spiral, type PKB, NKN.		2		
17	Condensers, 30 - 32 kV, 0.2 MKO,		2		
18	Equipment metering an alternating resistance.		2		

4.2 Technical Assistance.

4.2.1 Develop Grid Code.

Specifications on how the metering is to be done on the GWEM should be included in the Grid Code. The Grid Code for the GWEM is under development. Annex 3 includes some of the metering standards and concepts that Hagler Bailly intends to promote for inclusion in the Grid Code.

4.2.2 Training: Installation and Grounding Of Electronic Metering Equipment.

Modern electronic devices for installation and use in electric utility facilities (substations, generating plants, control centers, telecommunications rooms, etc.) are rugged and meet a variety of industry standard tests. However, for these electronic devices to work as expected the devices must be installed in the electric utility facilities in a manner that reduces the noise (transient and impulse) below the level that the devices are specified to survive. Thus, it is proposed that a training course entitled "Grounding Of Electric Utility Metering" be conducted for Electrogadatsema, Electrodispatcherizatsia, and Satbobenergoinformatika personnel involved with the installation and maintenance of the metering and telecommunications for the GWEM.

If the electronic equipment (meters, telecommunications equipment, computers, etc.) is not installed well, there will be many years of frustratingly poor and marginal performance of the equipment.

4.2.3 Training: Meter Sealing and Tracking Procedures.

Procedures need to be established in the GWEM to track, use, and dispose of the meter seals used for the GWEM metering. It is proposed that the vendor who provides the meter seals also include as part of their bid a meter seal training program for the parties (ED, EG, SBEI, etc.) involved in the GWEM metering.

The technical specifications for the training will have to be included in the technical specification for the meter seals. For costing purposes it is assumed that each course will last three days, and that the course will be conducted for each of the involved parties (ED, EG, and SBEI).

PREVIOUS PAGE BLANK

5. Associated Institutional Reforms.

Task: Description of associated institutional reforms that would need to accompany a metering replacement and / or upgrade program.

5.1 Lead Department For the GWEM Metering Project.

A Department in Georgia needs to lead and be responsible for the project to install the metering for the GWEM. Based upon our work with ED, EG, and SBEI we recommend that SBEI lead the project (lead the Task Force). The persons in SBEI appear to have a broad perspective and will be responsible for receiving and processing the data.

5.2 Reducing Theft Of Electricity, Fraud, and Corruption.

Large blocks of energy are measured each hour by the metering, and large quantities of money are involved. Therefore, strict controls and audit procedures are needed to protect the integrity of the metering, the telecommunications, and the data. In a wholesale electricity market the greatest threat to the integrity of the metering, telecommunications, and the data is the employees.

5.2.1 Code Of Ethics.

A Code Of Ethics dealing with electricity metering, settlements, and billing should be used by each utility, agency, and company involved in the GWEM. Suggested wording for this Code of Ethics is included in Annex 4 Code Of Ethics For Metering Personnel and Contractors.

Either one Code Of Ethics could be used by all companies, or each company could draw up a separate Code of Ethics for their own use (and in this case the content of the company specific code should be comparable, or better, than that suggested in the Annex).

Each year, each employee who deals with the metering, telecommunications, meter seals, CTs, VTs, wiring, and computer systems is to review the Code Of Ethics and sign three copies. The employee's supervisor countersigns each of the three copies. The employee keeps one copy of the Code Of Ethics; the supervisor keeps a copy; and the third copy goes to the Personnel Department of the utility (SBC, agency, utility, etc.).

The purpose of three copies and the purpose of signing it each year is to make it clear to the employee that if they steal electricity, help others steal electricity, fail to act so that others are able to steal electricity, commit fraud, or knowingly enter incorrect data and information into the system (either paper or computer systems) they will be disciplined. The punishment will vary, and can include dismissal from employment by the company.

PREVIOUS PAGE BLANK

5.2.2 An Adequate Wage.

The employees of the utilities of Georgia, especially those involved in the metering, billing and collection process, should be paid a fair, just, adequate and living wage. Without an adequate income, theft of electricity, theft of equipment, fraud, embezzlement, and coercion will be significant.

The employees need to have an adequate wage so that they do not have to help others steal electricity, and so that they see the loss of their job to be a significant loss in their life.

6. Costs Estimates and Schedules

Task: Cost estimates, schedule, and associated technical assistance to implement a metering replacement and / or upgrade program.

6.1 Cost Estimates.

The cost estimates for Hagler Bailly's recommended program are contained in Table 12 Summary of Recommended Measures and Technical Assistance (Repeated).

6.2 Schedules.

The material and technical assistance identified in this Report can be used by the GWEM as soon as it is installed and on – line. Until the telecommunications and central billing system improvements are operational, the metering in the field can be read manually, and the readings (hourly, daily, etc.) phoned and faxed to the SBC of the GWEM (as is done now).

Obtaining the readings hourly and daily by voice telephone and fax may not be the most desirable method at this time, but the telecommunications infrastructure is fundamental to the operation of the GWEM.

6.3 Project Components and Funding Sources.

Table 13 Costs: Fichtner Study (Base Case) Plus Hagler Bailly Study (Additions), provides a summary of the components of the project and the estimated costs. The first four lines of the table repeat the information that was published in the final Fichtner Report About Metering. Lines 6, 7, and 8 present the estimated costs that are developed by Hagler Bailly. These costs are estimates based upon present prices from suppliers; the estimates tend to be on the high side so that the project is not underfunded.

We understand that the SBC and the GWEM will be provided with the following:

1. A stand alone Meter Data Collection System (MDCS) at the SBC. This is a computer system that is separate and apart from the computer system for the dispatch and control of the power system. The two computer systems will be connected and exchange data.

2. A stand alone remote terminal unit (RTU) at each substation and generating plant for the metering data. This is an RTU that is separate and apart from the RTU that will be at the same substation and generating plant for SCADA and load - frequency control (dispatch).

3. A telecommunications infrastructure (cables, fiber optic channels, digital power line carrier, etc.) that the SBC of the GWEM can use and build upon to collect their metering data. The SBC of

the GWEM should be able, of course, to use other communications channels (public switched telephone, FM radio, cellular phone, microwave, pilot wire, etc.) if that option makes sense (is economic, practical, and timely) for the SBC.

The impact of the above is that the SBEI, the SBC, the GWEM, ED, and EG can proceed to specify, bid, purchase, fabricate, install, start up, and operate the Meter Data Collection System for the SBC in parallel with the specification, bidding, purchase, fabrication, installation, start up, and operation of the SCADA and energy control center equipment. That is, work on the MDCS, the design of which is being worked on now, can proceed at a quick pace once the funding is approved and in place.

The shared part of the MDCS and SCADA projects is the telecommunications infrastructure. Unfortunately, telecommunications projects are expensive and time consuming. We do not recommend developing a second telecommunications infrastructure project just to support the MDCS. Rather, both the MDCS and the SCADA project should push for the telecommunications upgrades proposed in the Fichtner Study to be in place as soon as possible.

6.4 Benefits,

The recommendations of this Report benefit the Georgia Wholesale Electricity Market in several ways:

- Fairness and accuracy: All of the energy passing through the GWEM is measured and reported.
- Reduction of non – technical losses: Losses do to missing metering, bad metering, theft, and fraud are identified quickly so that that they can be dealt with.
- Timeliness of data for SBC and NDC: Hourly interval data is made available at the SBC and to the NDC so that the GWEM can be dispatched in a timely fashion.

Table 12 Summary of Recommended Measures and Technical Assistance (Repeated)

Report Section	Description Material	Approximate Quantity	Estimated Cost Per Unit Cost (US	Estimated Cost (US Dollars)	Comments
4.1.1	Revenue meters in support of the Wholesale Electricity Market, in addition to the 360 meters in the WB Aide - Memoire and the Fichtner Report.	129	$1,400.00	$180,600.00	Unit price of meter same as in Fichtner Report.
4.1.2	Meter test switches, 10 position, with sealable clear plastic cover.	489	$100.00	$48,900	One test switch for every meter in the GWEM (360 + 129). Speeds up the installation of the meters; deters tampering with the metering circuit.
4.1.3	Meter seals, serial numbered, non – toxic.	120,000	$0.25	$30,000.00	Provides enough seals for five companies and agencies to seal the meters five times. The allows for multiple entries in the first year or two.
4.1.4	Meter seal tracking program (software and hardware).	1 lot	$75,000.00	$75,000.00	For all five utilities and agencies involved.
4.1.5	Meter control cable. [4 conductors, # 10 AWG (4 square millimeters) each, 600 Volt class; with foil shield (copper or aluminum), and # 16 AWG tinned copper drain line].	100 km	$2,000/km	$200,000	To separate the metering and the relaying circuits and, because the existing cables are deteriorating.
4.1.6	Communications cable. [4 copper conductors, stranded, # 16 AWG (1.2 square mm each), with foil shield (copper or aluminum) and # 18 AWG tinned copper drain line; 600 Volt class].	30 km	$1,500/km	$45,000	For wiring the low voltage communications and telemetry circuits of the metering system.
4.1.7	Meter tester for laboratory.	1	$35,000.00	$35,000.00	For the Department that would test the meters in the substations.
4.1.8	Meter test equipment for field.	10	$10,000.00	$100,000.00	For the Department that would test the meters in the substations.
4.1.9	Current transformer field testing equipment. Up to 8,000 Amps.	1	$150,000.00	$150,000.00	For the Department that would test the CTs in the substations. To help locate which CTs are in need of replacement.
4.1.9	Voltage transformer field test equipment. Up to 220 kV.	1	$150,000.00	$150,000.00	For the Department that would test the VTs in the substations. To help locate which VTs are in need of replacement.

Report Section	Description Material	Approximate Quantity	Estimated Cost Per Unit Cost (US	Estimated Cost (US Dollars)	Comments
4.1.10	Additional test equipment.	Lot	Details provided elsewhere.		A list of equipment is provided in Table 11 Test Equipment Proposed By Electrogadatsema , page 45. No estimate of the price is available at this time.
4.1.11	Current Transformers - at 500, 220 and 110 kV stations. Depending upon results of CT testing the actual mix of CTs replaced may vary.		Details provided elsewhere.		Purchase of sets of CTs for a particular site should depend upon the outcome of the testing of the CTs now at that site using the CT test equipment in Section 4.1.9.
4.1.11	Voltage Transformers - at 220 and 110 kV stations. Depending upon results of VT testing the actual mix of VTs replaced may vary.		Details provided elsewhere.		Purchase of sets of VTs for a particular site should depend upon the outcome of the testing of the VTs now at that site using the VT test equipment in Section 4.1.9.
	Total – Material			$1,014,500.00	
	Description **Technical Assistance**				
4.2.1	Develop the metering components of the Grid Code for the Georgia Wholesale Electricity Market.	Under current Task Order			Define the procedures and the standards for meters, metering, sealing, testing, etc. of meters at plants, substations, and direct customers.
4.2.2	Training: Installation and Grounding of Electronic Meters	For 50 people	$750	$37,500.00	Ten people per company or agency; five sessions, one session per company or agency.
4.2.3	Training: Meter Sealing Procedures.	For 50 people	$250	$12,500.00	Ten people per company or agency; five sessions, one session per company or agency.
	Total - Technical Assistance			$50,000.00	
	Total - Hardware Plus Technical Assistance			$1,064,500.00	

Table 13 Costs: Fichtner Study (Base Case) Plus Hagler Bailly Study (Additions)

Line	Subject	Foreign Cost (million US Dollars)	Local Cost (million US Dollars)	Total Cost (million US Dollars)	Grouped Items Total (million US Dollars)
	Fichtner Study (Base Case) From Annex 10 – 1 Of Fichtner Study.				
1	Metering Equipment In Substations	$0.77	$0.04	$ 0.81	
2	Spares, Tools, and Laboratory Equipment,	$0.12	$0.00	$ 0.12	
3	Central Station Hardware and Software	$0.40	$0.00	$ 0.40	
4	Total For Metering System (Fichtner)	$ 1.29	$ 0.04		$ 1.33
5	**Hagler Bailly Study (Additional Items) From Table 1 Of This Report.**				
6	Material, From This Study	$1.0145	$0.00		
7	Technical Assistance, From This Study.	$0.050	$0.00		
8	Total For Metering System (Hagler Bailly Study)	$ 1.06	$ 0.00		$ 0.99
9	Total (Both Studies)	$ 2.35	$ 0.04		$ 0.99

Annex 1 Glossary Of Abbreviations

This Appendix contains a glossary of the abbreviations used in this Report.

ABB	A manufacturer of meters and metering systems.
AES Telasi	A electric distribution company in Tbilisi.
ANSI	American National Standards Institute.
AWG	American Wire Gauge.
CD-ROM	Compact Disc – Read Only Memory.
CT	Current Transformer.
ED	Electrodispatcherizatsia.
ED	Energy Diversion.
EG	Electrogadatsema.
EMS	Energy Management System.
FM	Frequency Modulation.
GSU	Generator Step Up (bank, transformer).
GWEM	Georgia Wholesale Electricity Market.
HEP	Hydro Electric Power (generating) Station.
HPS	Hydroelectric Power Station.
IEC	International Electrotechnical Commission.
KfW	Kreditanstalt fur Wiederaubau
kV	kilo Volts (voltage, potential).
kW	kilo Watts (power, demand).
kWh	kilo Watthours (energy, consumption).
LDC	Load Dispatch Center.
LFC	load - frequency control.
MDCS	Meter Data Collection System.
mm	millimeter.
MW	Mega Watts (power, demand).
MWh	Mega Watthours (energy, consumption).
MVAR	Mega Volt - Amperes Reactive.
NDC	National Dispatch Center.
RTUs	Remote Terminal Units.
SBC	Settlement and Billing Center of the Georgia Wholesale Electricity Market.
SBEI	Satbobenergoinformatika, Ltd.
SCADA	Supervisory Control and Data Acquisition; also known as Telemechanical.
TEP	Thermal Electric Power (generating) Station.
TOE	Theft of Energy.
TOS	Theft of Service.
USAID	U. S. Agency for International Development.
UUE	Unauthorized Use of Energy.
VAR	Volt - Ampere Reactive (reactive power, demand).
VARh	Volt – Ampere Reactive Hour (reactive energy, consumption).
VT	Voltage Transformer.
WB	World Bank.

PREVIOUS PAGE BLANK

Annex 2 References

1. "Feasibility Study for Rehabilitation and Upgrade of System Dispatch, Communications, and Metering," Georgia, Energy Market Support Project, Institutional Assistance for Market Administration and Regulation, Fichtner GmbH & Co., Final Report, January, 2000.

2. "Rehabilitation of Transmission Network," Georgia Electricity Market Support Project,, Interim Report, August 1999, by Fichtner GmbH and Co. KG, Stuttgart, Germany. Document Number 4899P17 - 000/11 639 303/9210, August, 1999.

3. "1. Table Of Organization of Electrogadatsema," Section 5. Terms of Reference [T & D 03/10/00], page 143.

4. "2. Table of Organization of Dispatcherizatsia." Section 5. Terms of Reference [T & D 03/10/00], page 145.

5. "Report On the Grid Code For the Georgia Power Sector," Georgia Power Sector Reform, Contract No. LAG - I - 00 - 98 - 00005 - 00, Task Order 4, Final Report, dated October 22, 1999.

6. "Report On Market Rules For the Georgia Wholesale Electricity Market," Georgia Power Sector Reform, Contract No. LAG - I - 00 -98 - 00005 - 0, Task Order 5, Final Report, dated October 22, 1999.

7. "Technical Standards Of Electric Power, Wholesale Market Of Georgia," Draft, Tbilisi, June 1999. This document is also titled "Report On the Grid Code For the Georgia Power Sector," Georgia Power Sector Reform, Contract No. LAG – I – 00 – 98 – 00005 – 00, Task Order No. 4, Final Report, October 22, 1999.

8. "HV Transmission Network Supervised By the NCC,", Load Dispatch Centre Georgia, Annex 6 – 1, Fichtner Study. Drawn by Muller, 13.01.00. 83.5 cm by 60.5 cm; a one – line diagram of the transmission system.

9. "Accounting Manual For Electric Companies," Republic of Georgia, by the Carana Corporation, September 1998.

10. АББ ВЭИ Метроника Literature on various metering products: Document 1 KRU – 000020, Document 1 KRU – 001014, and a document on the EuroAlpha, Alpha Smart RTU – 300, and the ETL – 500.

11. "Aide - Memoire", Georgia, Energy Sector Adjustment Credit, Supervision Mission, Electricity Market Support Project, Appraisal Mission, Tbilisi, February 10 – 22, 2000.

12. "Feasibility Report For Delivery Order No. 16, Communications, Control and Dispatch Systems and Maintenance of Four Hydroelectric Power Stations," Burns and Roe Enterprise, Inc., December, 1996.

PREVIOUS PAGE BLANK

13. "Automatic System With Electric Meters, of Metering and Controlling the Consumed Power In Tbilisi," by Sophia Baratashvili, Deputy Director, Satbobenergoinformatika, November 1999.

Annex 3 Proposed Metering Items For the Grid Code

The following items are being developed and will be recommended for inclusion in the Grid Code for the GWEM.

A3.1 Unbiased Metering.

It is suggested that in the Metering Section of the Grid Code it be specifically stated that the metering is to be engineered, designed (drafted), installed, and calibrated in such a manner that there are no known biases (offsets) in the metering. That is, the mean error of the metering installation (CTs, VTs, wiring, test switches, and meters) is zero to the best of the ability of the engineers, installers, and test personnel. After a meter is adjusted and calibrated it shall be left as close to mean error zero as practical. It is recognized that some electronic meters do not have calibration adjustments for the utility to use either in the metering laboratory or in the field.

- For example, it would be a violation of this principle if a two element meter were to be used on a four wire circuit, for doing so would result in a known under registration (that is, a bias, an offset) that could be avoided by using three element metering and line to neutral voltages.

- Additionally, it would be a violation of this principle if after a meter is calibrated (either in the meter shop or in the field) its registration was set not as close to 100 % registration as practical, and instead the registration were set fast (or slow), yet within the allowed limits specified in the Grid Codes.

A3.2 Metering Three Wire and Four Wire Circuits.

See Figure 3 Metering Three Wire and Four Wire Circuits.

It is suggested that as a principle the grid code should state that <u>all</u> of the power and energy passing the metering point shall be measured.

- This means that for a three wire circuit two element metering would be used. The metering would use two of the line currents (say, A and C), and two line to line voltages (say, A - B and C - B).

- This means that for a four wire circuit three element metering would be used. The metering would use the three line currents (A, B and C), and the three line to neutral voltages (A - N, B - N and C - N).

Much money is involved at transmission system interconnections; even small metering biases (offsets) can add up over time to a significant amount of money.

It is clear when a circuit is a three wire circuit; that, is, for a three wire circuit there are three phase conductors, but no connection to the earth. It can be more difficult to recognize a four wire circuit. A four wire circuit can exist under the following conditions:

- The neutral of the transformer is solidly connected to the substation ground grid.
- The neutral of the transformer is connected to the substation ground grid through a neutral resistor.

The contact of the substation ground grid to the earth develops a current path. This earth "return" current path alone is sufficient to make this a four wire circuit, and thus require three element metering. Several additional design and field practices will enhance the effectiveness of this return path:

- The connection of a sky wire from the local substation under discussion to a distant point, such as the next tower on the transmission line leaving the substation, or to the next substation in the transmission grid.
- The connection of the bonding cables between the local substation under discussion to an adjacent substation.

Failure to realize that a transmission circuit is a four wire circuit can result in under registration of the power and energy passing the metering point, and thus incorrect readings. Consider the case of the generator step up (GSU) transformer. This is sometimes called the unit transformer. A very common connection is for the low side (connected to the generator) to be a three wire delta transformer connection, and the high side (connected to the transmission grid) to be a four wire wye (star) - grounded transformer connection. If the metering is on the low voltage side then two element metering is used, with two phase currents and two line to line voltages. If the metering is on the high voltage side then three element metering is used, with three phase currents and three line to neutral voltages.

The differences between metering on the low side and metering on the high side involve such matters as:

- The delivery point definition from a contractual / commercial point of view.
- Cost of the CTs and VTs for the two voltage levels.
- Additional risk to the high voltage transmission system by the addition of CTs and VTs on the high side; however, the CTs and VTs may be there anyway to support relaying.
- Whether or not the meter readings are compensated to the other side of the transformer, taking into account the losses through the bank.
- Financial responsibility for the losses (kWh) in the transformer bank.
- Whether there is room on the low side or the high side for the CTs and the VTs.

It is important to recognize three wire circuits and four wire circuits for generating plant and interconnection metering early in a project such as this project for the GWEM. Failure to identify the three wire and the four wire circuits early in the project can result in the wrong metering equipment being purchased and installed for the project. These are very expensive mistakes to recover from later in the project. The following are some of the financial considerations.

- The metering for three wire circuits will use line to line voltage transformers and metering for four wire circuits will use line to neutral voltage transformers. These VTs are not interchangeable, and the higher the nominal service voltage, the higher the cost to exchange the voltage transformers.

- Line to line voltage transformers will probably be located in one area of the substation, and line to neutral voltage transformers will probably be located in a different area of the substation. The difference in location has to do with ease of access to the substation buses, ease of installing disconnects and fuses on the voltage transformers, and the amount of concrete (a substantial amount) that will be poured for the foundation of the voltage transformer. That is, the concrete foundation once poured cannot be moved to a different location later.

Table 14 Metering For Three Wire and Four Wire Circuits, helps identify three wire and four wire circuits.

Table 14 Metering For Three Wire and Four Wire Circuits

Case	One Side Of the Inter – Connection	Other Side Of the Inter – Connection	Comment
1	Un - grounded	Un – grounded	Not used in electric utility power transmission systems; sometimes found in customer's factory[10].
2	Un – Grounded	Grounded.	Three wire circuit.
3	Grounded	Un – Grounded	Three wire circuit.
4	Grounded	Grounded	Four wire circuit.

In the examination of a particular circuit it does not make a difference whether one side (or the other side) is a delta or a wye (star) configuration. Both delta and wye configurations can be grounded, or can be ungrounded. Also, any delta and wye configurations can be transformed into each other (that is, they are equivalent and interchangeable).

[10] Ungrounded services are rarely used in electric utility transmission and distribution operations. Ungrounded systems have operational and maintenance problems associated with them; but an advantage of ungrounded systems is the increase in reliability (up time). This increased reliability comes at the expense of the operational and maintenance problems. Therefore, electric utilities do not use the ungrounded circuits, are reluctant to continue ungrounded services to customers who have the services already, and it is usually the customer who installs and operates an ungrounded power distribution system (because they accept the operational and maintenance problems in return for the improved reliability).

Figure 3 Metering Three Wire and Four Wire Circuits

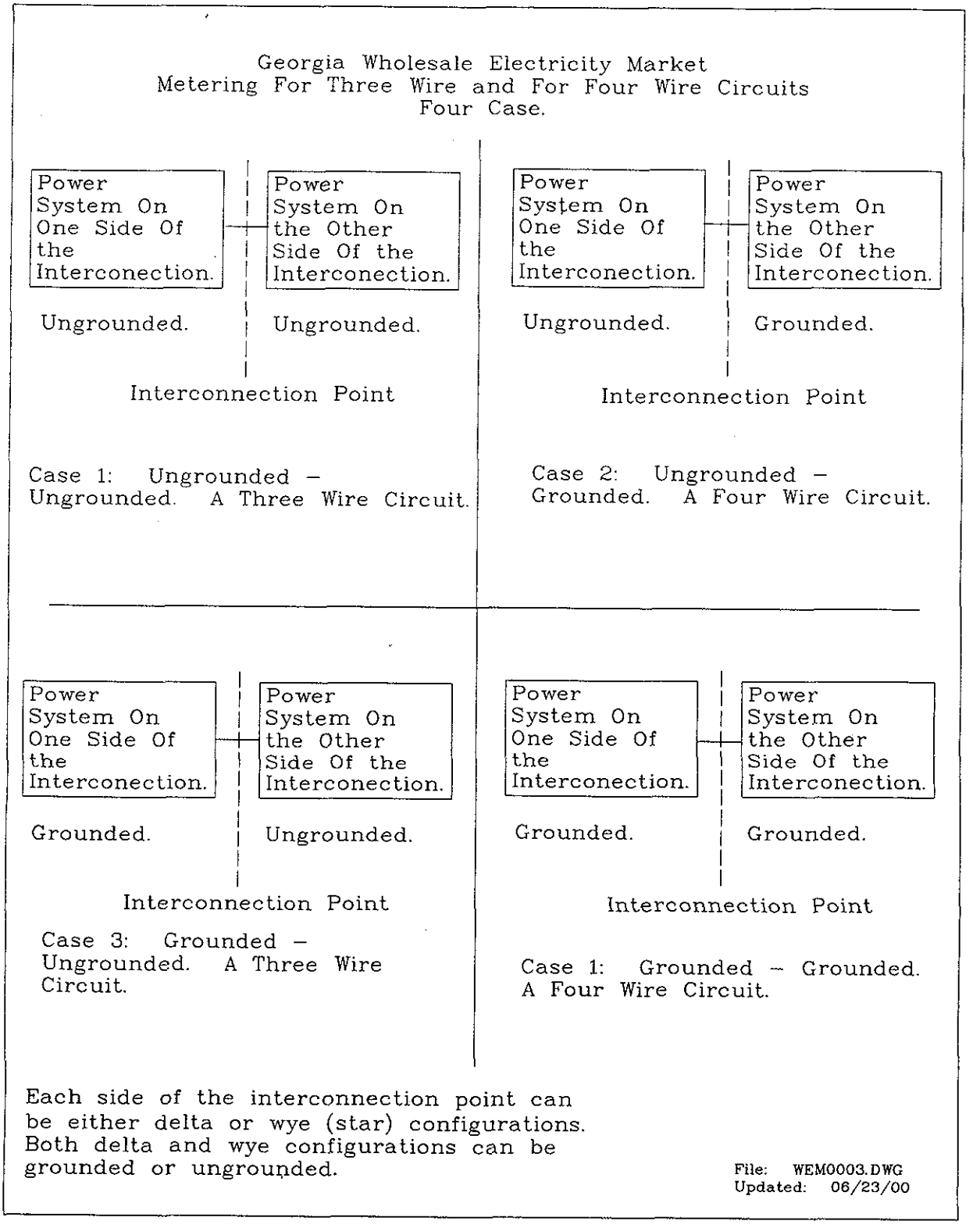

A3.3 Singularity Of Interconnection Metering.

See Figure 4 One Energy Meter and One Power Transducer At a Metering Point

It is suggested that the same set of metering be used by both parties to the interconnection. By metering we include the CTs, the VTs, and the meter. That is, each party at the interconnection and at the generating plant should not install and operated its own set of metering. Check (backup) metering is discussed in the next section, below.

The transducer in the following design is not needed if the meter provides the instantaneous voltages, current, and power readings as well as the interval (say, hourly) energy and demand readings.

A3.3.1 Active Energy (MWh) Readings.

If the control centers of both parties need the energy (MWh) readings from the interconnection point, then the one meter should be read and copies of the reading sent to both control centers. This provision makes sure that both control centers have the same buy and sell (in and out) readings.

A3.3.2 Active Power (MW) Signals.

If the control centers of both parties need the active power (MW) readings from the interconnection point, then the one transducer should be read and copies of the signals sent to both control centers. This provision makes sure that both control centers have the same interconnection power flow signal if they are doing load - frequency control in their control area.

A3.3.3 Reactive Energy (MVARh) Readings.

Readings for reactive energy (MVARh) are not normally collected by electric utilities because reactive power is an instantaneous aspect of the electric power system.

However, the same electronic meter can measure and provide the hourly reactive energy demand reading that may be of interest to system dispatch, and could be involved in billing between companies for reactive power support (a part of voltage control).

A3.3.4 Reactive Power (MVAR) Signals.

If the control centers of both parties need the reactive power (MVAR) readings from the interconnection point, then the one transducer should be read and copies of the signals sent to both control centers.

A3.4 Check Metering (Optional).

See Figure 4 One Energy Meter and One Power Transducer At a Metering Point, (same Figure as referenced in the previous section).

Check metering is metering that is installed at the interconnection point in case the primary metering fails or is removed from service for maintenance. It is suggested that at some later time check metering be installed at the interconnection point. This is not high priority. However, the existing electromechanical meters could be left in the circuit[11], along with the new electronic meters, as check meters.

Three versions of check metering are described below. There are pros and cons to each version. The first and second versions are favored, but the third version would be acceptable, provided that the check metering is only used during special situations (such as failure of a CT, VT, the meter, the transducer, etc.).

A3.4.1 Shared Revenue Accuracy CTs and VTs.

One version of check metering uses two meters and two transducers on the same set of CTs and VTs. The assumption in this design is that the CTs and the VTs are stable and do not drift over time, and that the meters and transducers could drift or fail over time.

All four devices (the two kWh meters and the two kW transducers) are wired in current series and voltage parallel. Under normal conditions, with all four test switches closed, the four devices run in parallel and track each other. Only one meter and one transducer is declared primary and the other meter and other transducer is the check metering.

In this version there are four test switches, one for each meter and one for each transducer. Under normal conditions all four test switches are closed. A meter or transducer can be removed from service for testing and maintenance by opening just the test switch associated with that device. The rest of the meters and transducers remain in service.

---

[11] The existing electromechanical meters could be left in the circuit along with the new electronic meters provided that the existing electromechanical meters do not burden the CT and the VT circuits beyond the design limits of the secondary CT and VT circuits.

For electronic meters the auxiliary power that energizes the meter is taken off of the "line" side of the test switch (and through a separate disconnect device, terminal block, fuse block etc.) so that the electronic meter is powered under all operating and test conditions.

The auxiliary power to the electronic meter (and related devices such as modems, isolating relays, data recorders, etc.) should come from the same bank of VTs used to measure the energy and power. However, the auxiliary power of each metering device (meter, modem, etc.) need not be on the same phase; rather, the devices are spread among the three phases so as not to burden one of the VTs beyond its limit.

One practice is to install a drop - out relay in the VT circuit in such a manner that in the event that the VTs signal disappears (VT failure, VT fuse blow, VT out for testing or replacement, etc.) the auxiliary power to the meter is transferred to another voltage source. Some typical alternate voltage sources are listed below:

- Bus VT.
- VT on another line.
- The substation AC service panel.

Installing a drop out relay so that energy is always provided to the meter is most important with electronic meters. When the auxiliary power is absent the meter must run on its internal battery, the battery may discharge, and the calendar - clock may be wrong. Different meters react to loss of auxiliary power differently, and meter manufacturers and their documentation must be consulted for the exact symptoms on the loss of auxiliary power.

A3.4.2 Second Set Of Revenue Accuracy CTs and VTs.

Another version of check metering installs a second set of meters and transducers on a second set of revenue accuracy CTs and VTs. This presumes that the second set of revenue accuracy CTs and VTs are available. This may not be the case. The comments, above, about the use of test switches applies here, too. In this case two of the test switches are on the primary metering, and the other two test switches are on the check metering.

The same comments, above, about tapping off the auxiliary power from the "line" side of the test switches and routing the auxiliary power circuit through a separate disconnect device applies here too.

The same comments, above, about providing an alternate source of auxiliary power by using a drop - out relay applies this case, too.

A3.4.3 Second Set Of Relay Accuracy CTs and VTs.

Yet another version of check metering installs the second set of meters and transducers on a set of relay accuracy CTs and VTs. Though not ideal from a revenue accuracy point of view, this version of check metering does provide a truly independent second measurement.

The comments, above, about the use of test switches applies here, too. In this case two of the test switches are on the primary metering, and the other two test switches are on the check metering.

The same comments, above, about tapping off the auxiliary power from the "line" side of the test switches and routing the auxiliary power circuit through a separate disconnect device applies here too.

The same comments, above, about providing an alternate source of auxiliary power by using a drop - out relay applies this case, too.

Figure 4 One Energy Meter and One Power Transducer At a Metering Point

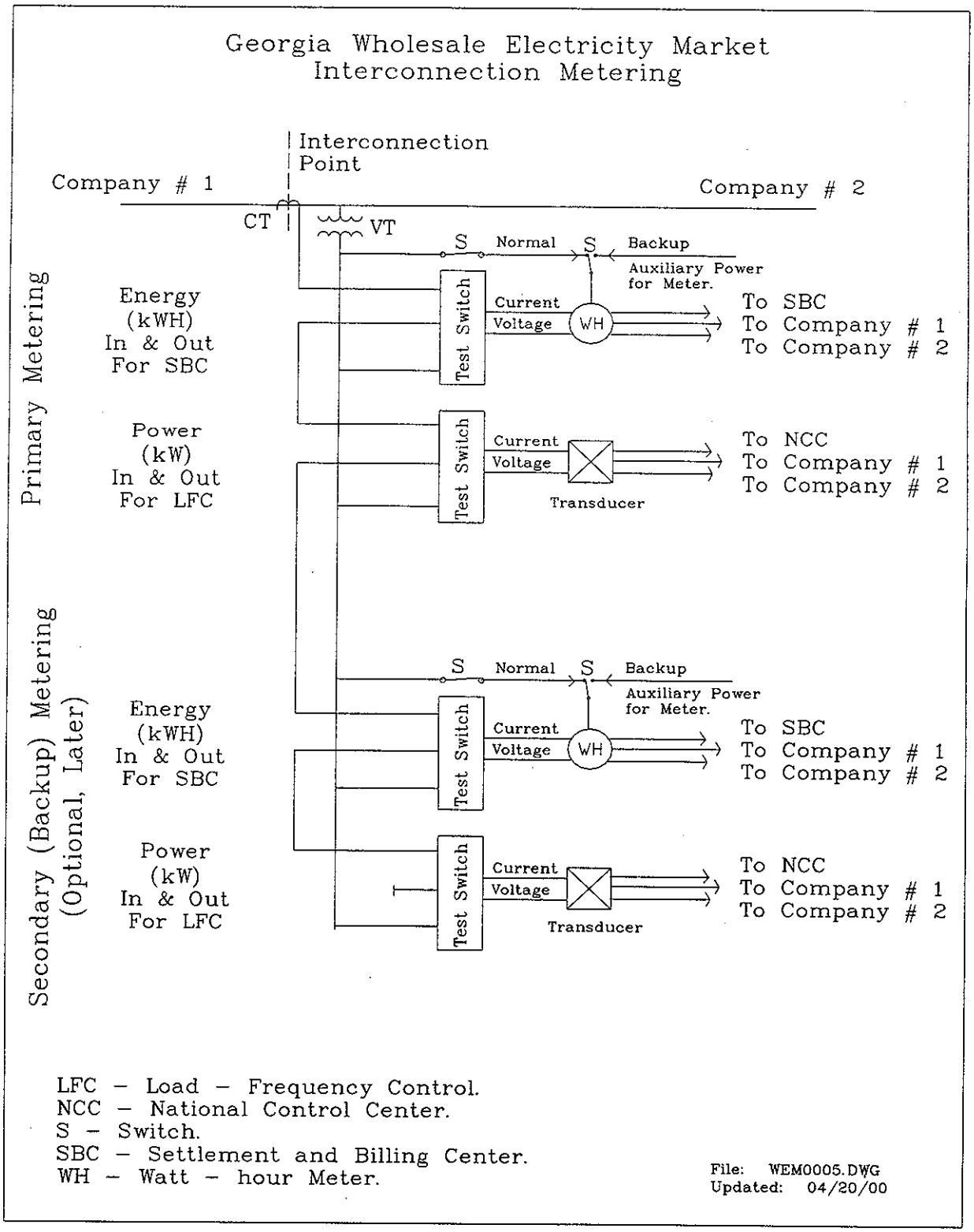

A3.5 Substation Auxiliary Power.

Substation auxiliary power (kW) is that power used in a substation to run the lights, heating, air conditioning, electric and electronic equipment and systems, air compressors, circulating pumps on large power transformers, cooling fans on large power transformers, etc.

The energy (kWh) for substation auxiliary power should be metered with revenue class meters, CTs, VTs, wiring, etc.. The substation auxiliary energy is a cost of doing business for the transmission company, and it should be accounted for in the energy balance of the transmission system. This substation load internal to the transmission grid cannot be deduced by subtracting the energy sales from the energy purchases because of: (1) the measurement uncertainty (dispersion, spread) that naturally occurs in the metering system; (2) theft of electricity from the substation, that is, electricity that is taken from the station service bank (distribution panel) and either sold or given to people who live and work around the substation; and, (3) the technical losses (heating) that occurs in the lines and transformers.

If the substation auxiliary power is not metered correctly and accurately, the internal system losses of the transmission system (as calculated by subtracting the energy sales from the energy purchases each hour) will always appear too high.

A3.5.1 Power Supplied from the Transmission Grid for the Control House.

There are two places in the substation where the substation auxiliary power can be obtained.

- This power is most often taken from a small distribution transformer in the substation (called the station service transformer) connected to a distribution line leaving the substation.
- Or, the substation auxiliary power is taken off of a third winding on a large power transformer.

The meter data system of the SBC should freeze and read these substation auxiliary power meters at the same time as it reads the other revenue meters in the system.

A3.5.2 Power Supplied from the Transmission Grid for Non - Substation Activities.

An example of this would be power taken from the station service transformer and used in an adjoining city, housing area, apartment house, store, etc. This energy should be metered with revenue accuracy class meters, CTs, and VTs and the consumption should be collected by the MDCS along with the energy readings each hour (or each 15 or 30 minutes).

There are several ways to deal with the amount of energy that leaves the substation. Three of them include:

1. Disconnect the unauthorized circuits that leave the substation boundary.

2. Meter the energy in the wires in the unauthorized circuits that leave the substation boundary, and charge this energy usage to the local distribution company to encourage the distribution utility to enforce cut-off and collection.

3. Meter the energy in the wires in the unauthorized circuits that leave the substation boundary, and the SBC of the GWEM bills the customers. This would be converting the unauthorized connections to direct customers (customers fed directly from the transmission system, bypassing the local distribution companies).

A3.5.3 Power Provided By the Local Distribution Company.

If the substation power is provided by the local distribution company from their distribution circuit in the neighborhood of the substation, then the substation auxiliary power is still metered (with revenue accuracy class meters, CTs, VTs, etc.) except in this case the local distribution company would submit a bill to the transmission company each month.

A3.6 Generating Plant Auxiliary Power.

Auxiliary power is used by the generating plant to operate motors, lighting, instrumentation and control, heating, conveyors, etc.

1. When the generating plant is producing electricity and injecting it into the transmission grid the generating plant will generate its own auxiliary power.

2. When the generating plant is not generating, the generating plant will be taking auxiliary power from the transmission grid.

The amount of auxiliary energy has to be metered. The main meter used to measure the net injection of power into the grid through the generator step up transformer cannot be used to measure the generating plant's auxiliary load because the plants auxiliary load is very small compared to the normal operating

range of the current transformers (100% to 10%). Therefore, the generating plants auxiliary power should be metered at the plant's auxiliary power transformer.

See Figure 5 Measuring Energy (kWh) Used by Power Plant Auxiliaries, for a sketch of typical metering designs.

Since the interconnection point between the generating company and the transmission company is at the high side of the GSU, the meter readings from the auxiliary transformer bank must be compensated from the low side of the GSU to the high side of the GSU. This compensation is a mathematical formula, and it most often performed in the meter. It can also be performed in the SBC, but this extra labor is not usually done by utilities.

At the SBC the meter readings are processed so that when there is an injection of energy into the transmission grid by the generating plant the interval by interval meter readings from the auxiliary power transformer are set aside (since the plant is generating enough energy for its own auxiliaries).

When the generating plant is not injecting energy into the transmission grid, the compensated meter readings from the meter on the plant's auxiliary power transformer are read as a purchase of energy by the plant from the transmission grid.

Figure 5 Measuring Energy (kWh) Used by Power Plant Auxiliaries

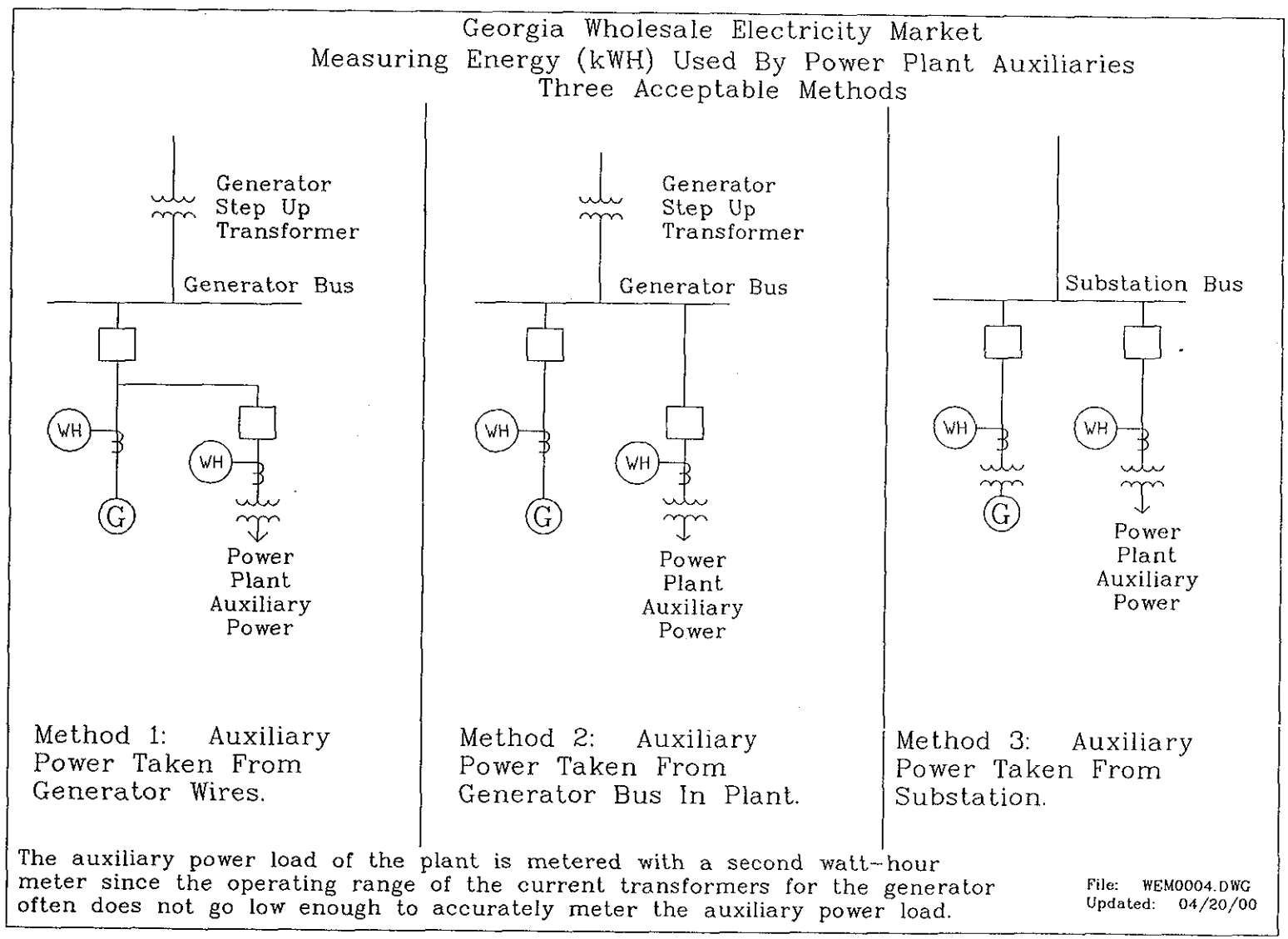

A3.8 Sealing Of Metering Equipment By Both Seller and Buyer.

The metering between the generating companies and the grid, the metering between the grid and the distribution companies, and the metering between the distribution companies is called the interconnection metering. The interconnection metering affects revenue (money). Both parties to the transaction (buyer and seller) should be confident that the metering is within specifications, and has not been altered. The following comments are suggested for the sealing of interconnection metering.

It is suggested that both buyer and seller have the right to install their own meter seals on the interconnection metering. As a minimum requirement, the company providing the metering, whether it is a utility or a meter service provider, shall seal the metering equipment.

The seals should be installed on the following metering devices.

- The demand reset mechanism of the meter; this is usually a special kind of seal just for use on demand reset mechanisms.
- The meter sealing ring on socket rated meters.
- The wiring cover on bottom connected meters.
- A cover that protects the back of switchboard (back connected) meters.
- Test switch covers.
- The metering enclosure (box).
- A cover that protects any and all terminal blocks in the CT and VT secondary circuits.
- The access covers (plates) on all CTs and VTs in the substation.

Normally, the meter seals would be broken open only in the presence of the representatives (usually, metering personnel) of both the buyer and seller. The buyer and seller could agree that either party could break the meter seal and work on or examine the installation if they notify the other party and enable the other party to be present.

Cut (broken) meter seals shall be returned to the meter shop, where the seals are to be permanently destroyed and discarded. When returned to the meter shop they should be compared with the record keeping for the metering site to confirm that the seal that was removed from the metering site was the same seal that the records indicate was installed the last time there was authorized work, maintenance, or testing of the metering. If the serial numbers of the meter seals are not tracked, logged, and checked, then any employee with meter seals can tamper with the metering with little evidence of the tampering having occurred. Cut meter seals shall not be left or disposed of at the metering site or at other non - meter shop locations.

Meter seals shall be controlled, that is, they should be individually numbered, assigned to a meter person, the meter person must account for all meter seals installed and all meter seals cut (removed). The meter seal numbers should be tracked as follows:

- The meter seal is received from the seal manufacturer, and is in stock.
- The meter seal is assigned to a meter person, but the meter seal is not yet installed.
- The meter seal is installed. The record keeping here would indicate the seal serial number, the physical location (by substation name, by meter serial number, and by device onto which the seal

PREVIOUS PAGE BLANK

is installed (meter sealing ring, meter wiring connector, meter enclosure, CT access cover, VT access cover, etc.).

Before a meter seal is removed (cut) the servicing personnel should check the seal's serial number to be sure that the actual number matches the expected number.

Under special (for example, emergency, or safety) any person can remove the meter seal. However, they should be required to notify appropriate persons that the meter seal has been cut, and they shall either leave the meter seal at the location, or return the meter seal to the meter shop (or meter service provider).

Each utility, company, and meter service provider should have their own distinctively labeled meter seal. By distinctive we mean that the name or initials of the utility, company, or service provider is indelibly stamped onto the meter seal.

A3.8.1 Meter Seals With Unique Serial Numbers On the Seal.

Meter seals with unique serial numbers on the seal should be used so that the serial number of the seals installed on the metering (meters, test switch covers, metering enclosures, CTs cover plates, VT cover plates, junction boxes, etc.) can be recorded. The next time the metering is worked on both parties (buyer and seller) should check the serial numbers of all of the meter seals to be sure that no person has tampered with the metering.

A3.8.2 Meter Seals Without Unique Serial Numbers On the Seal.

It is recommended that meter seals without unique serial numbers not be used to seal the interconnection and generating plant metering. Without a unique serial number on the meter seal there is no way to detect that an unauthorized person has tampered with the metering.

A3.9 Witnessing Of Metering Tests.

Normally, the utility owning the metering (or a meter service provider) will test the metering equipment. It is suggested that the other party to the interconnection agreement be permitted to witness the metering tests, and even participate in the testing if they wish. The other party should be permitted to bring their on field calibration standard (for the meter, for the CT, for the VT, etc.).

The field standards of the two utilities should be used in the testing of the device under test (meter, CT, etc.). For meters, this is usually accomplished by wiring both companies watt-hour field standards into the test circuit, and operating the two standards in parallel. The results of the field testing are accepted if two field standards show the same registration (to within a specified tolerance on the measurement).

The Grid Code should state the difference between the two field standards that will be acceptable. When the difference between the two field standards is larger than the accepted limits, the two parties should not

test the meter, and should first work to resolve why the two field standards differ by so much. Typical reasons for such differences include:

- Either or both field standards are beyond (out side) their scheduled re-certification time limits.
- Either or both field standards have drifted beyond acceptable limits for some reason (age, dropped, abused, defect, etc.).
- Either or both of the laboratory standards of the two parties have drifted beyond acceptable limits for some reason.

A3.10 What Metering Equipment Is Tested.

The metering equipment that is tested includes the meters, the CTs, and the VTs.

Meters can change over time in the field. CTs and VTs can also change with time in the field, although they change less often than the meters change.

Meters are tested by placing them on meter test boards in the meter shop, or by testing the meter in the field by paralleling the meter under test with a field standard and running a known load through the two devices. Current transformers can be tested in the field with both CT burden testers and CT admittance testers. The CTs can be tested in the meter shop with comparison bridges. VTs can be tested similarly.

A3.11 Labeling Of Revenue Metering Circuits.

The CT, VT and auxiliary power circuits (if any) to the interconnection metering should be labeled. Labeling the circuit hopefully prevents inadvertent changes to the metering, such as bypassing the current circuits, opening voltage circuits, opening auxiliary power circuits, etc. Suggested wording for the label is the following:

Interconnection Revenue Metering Circuit Notify National Settlement and Billing Center and the National Dispatch Center When Working On This Circuit.

This label, or a similar one would appear on the CT, VT and Auxiliary Power Circuit where the circuit can be serviced. For example:

- On the access plate to each CT terminal box.
- On the access plate (cover) to each VT terminal box.
- To all junction boxes in the CT and VT secondary circuit where the wiring is connected to terminal blocks.

- On each terminal block (as a cover over all of the screws) that handle the CT and VT wires.
- On the meter enclosure (including equipment racks) that contains the interconnection metering equipment.
- On any meter enclosures (including equipment racks) that contain the telemetry and the telecommunications equipment and system for the interconnection meter data system. This would apply to all racks from the metering site, through various relay, repeater and splice points, to the telemetry rooms in all control centers that the signals pass.
- On (or adjacent to) the revenue meter(s) themselves.

It is suggested that one standard label be adopted for the country and used at generating plants, substations, customer delivery points, on telecommunications equipment, and at telecommunication relay points.

Annex 4 Code Of Ethics For Metering Personnel and Contractors

Metering personnel can affect the financial performance of the utilities and companies by how they handle meters, metering equipment, seals, the meter readings (data, information), the meter programming (configuration), and related company documents. Therefore, it is suggested that wording similar to the following be included in the Code of Ethics for personnel working with metering and the Meter Data Collection System. The following wording is specific so that there is no (or minimal) misunderstanding.

The applicable persons will be working in the Meter Department, working for the meter service provider (if the metering work is contracted out), and in other Departments (for example, Relaying, Meter Reading, Accounting and Billing, Substation Operations, Telecommunication, the various dispatch and energy control centers, etc.). Each year personnel working on and with the meters, metering equipment (CTs, VTs, telecommunication lines, etc.), and Meter Data Collection System review and sign the Code Of Ethics.

Figure 6 Code Of Ethics (Draft)

Persons Working On the Metering, Telemetry, Data, and Billing Systems

Employees and contractors will be disciplined, up to and including dismissal from employment by the company, for theft, collusion, fraud, bribery and extortion. This includes, but is not necessarily limited to, the following activities.

1. Personally stealing energy, services, or material; this includes helping other persons, and this includes benefiting from these activities. These revenue protection issues include the related concepts of Energy Diversion (ED), Unauthorized Use of Energy (UUE), Theft of Energy (TOE), and Theft of Service (TOS). (Dismissal and prosecution)

2. Losing metering equipment, including meters, meter seals, passwords, sealing equipment (tools, keys, presses, etc.), current transformers, voltage transformers, phase shifting transformers, test switches, etc. (Disciplinary action and dismissal for gross violation)

3. Failure to control company equipment, material, tools, passwords, and documents in the possession of the employee or contractor. (Disciplinary action and dismissal for gross violation)

4. Loaning equipment, material, or documents to other persons, especially meter sealing equipment, presses, keys, passwords, locks, etc. (Disciplinary action and dismissal for gross violation)

5. Colluding with other persons to steal energy, services, or materials. (Immediate dismissal)

6. Failure to follow directions. (Immediate dismissal)

7. Falsifying company documents, records, data, etc. Knowingly letting other persons falsify company documents, records, data, etc. (Immediate dismissal)

8. Giving away, sharing, losing, failing to secure, or allowing to be stolen or copied company documents (plans, letters, reports, passwords, computer print outs, etc), including documents related to revenue protection, customer billing, customer accounting, meter records, and service orders. Documents includes paper, floppy discs, magnetic tapes, CD-ROM, and electronic images or transfers (data streams, files, screen prints, etc.) of this above information. (Immediate dismissal)

9. Soliciting extortion (money, payments, reimbursements, compensation, etc.) from customers or suppliers; or, accepting bribes (money, payments, reimbursements, compensation, etc.) from customers or suppliers. (Immediate dismissal and prosecution)

Employee's Name (signed)_____ Witnesses Name (signed)_____
Employee's Name (printed)_____ Witnesses Name (printed)_____
Employee Number _____ Witnesses Employee Number_____
Date signed: _____ Date signed _____
Three copies of this document are to be signed by the employee and the witness.
Copy 1 Employee Copy 2 Supervisor Copy 3 Human Resources Department

PREVIOUS PAGE BLANK

Annex 5 Meters Listed By Generating Plants and Substations

This Annex contains a tabulation of revenue meters needed for the Georgia Wholesale Electricity Market. This list of meters in this Annex were compiled by applying the metering principles in Annex 3 Proposed Metering Items For the Grid Code to a map of the Georgian transmission system. This is an incomplete tabulation for several reasons.

- Those customers who are directly served from the transmission system (bypassing a local distribution company) are not show in these tables.
- It is not clear which auxiliary loads at substations are for the operation of the substation, and which auxiliary loads at a substation are for customers located near the substation. In these tables both kinds of loads at each substation are listed.
- The boundaries between the transmission grid and the distribution companies are not clear.

These tables, though, show how a list of the meters needed for the GWEM can be developed by other persons.

PREVIOUS PAGE BLANK

Table 15 550 / 220 kV Enguri Hydro Electric Plant and Substation

Level	Station	Meters in Station (Fichtner Count)	Meters in Station (Hagler Bailly Count)	Meters in Network	Hagler Bailly List	Description of Measurement
500 / 220 kV	Enguri HEP	15	13		1	High Side, GSU, Unit # 1.
					2	High Side, GSU, Unit # 2.
					3	High Side, GUS, Unit # 3.
					4	High Side, GSU, Unit # 4.
					5	High Side, GSU, Unit # 5.
					6	Generating Station Auxiliary power (all units).
					7	Low side of 500 / 220 kV Transformer.
					8	Low side of 220 / 35 kV Transformer.
					9	500 kV Substation, Auxiliary power used in the substation.
					10	220 kV Substation, Auxiliary power used in the substation.
					11	500 kV Substation, Auxiliary power leaving the substation.
					12	220 kV Substation, Auxiliary power leaving the substation.
					13	500 kV Line to Russia.

PREVIOUS PAGE BLANK

Table 16 500 / 220 kV Sestaphoni Substation

Level	Station	Meters in Station (Fichtner Count)	Meters in Station (Hagler Bailly Count)	Meters in Network	Hagler Bailly List	Description of Measurement
500 / 220 kV	Sestaphoni	10	23		1	Low side of 500 / 220 kV Transformer.
					2	Low side of 220 / 110 kV Transformer Bank # 1.
					3	Low side of 220 / 110 kV Transformer Bank # 2.
					4	110 kV Line # 1.
					5	110 kV Line # 2.
					6	110 kV Line # 3.
					7	110 kV Line # 4.
					8	110 kV Line # 5.
					9	110 kV Line # 6.
					10	110 kV Line # 7.
					11	110 kV Line # 8.
					12	110 kV Line # 9.
					13	110 kV Line # 10.
					14	110 kV Line # 11.
					15	110 kV Line # 12.
					16	110 kV Line # 13.
					17	110 kV Line # 14.
					18	500 kV Substation, Auxiliary power used in the substation.
					19	220 kV Substation, Auxiliary power used in the substation.
					20	110 kV Substation, Auxiliary power used in the substation.
					21	500 kV Substation, Auxiliary power leaving the substation.
					22	220 kV Substation, Auxiliary power leaving the substation.
					23	110 kV Substation, Auxiliary power leaving the substation.

Table 17 500 / 220 kV Ksani Substation

Level	Station	Meters in Station (Fichtner Count)	Meters in Station (Hagler Bailly Count)	Meters in Network	Hagler Bailly List	Description of Measurement
500 / 220 kV	Ksani	10	16		1	Low side of 500 / 220 kV Transformer Bank.
					2	Low side of 220 / 110 kV Transformer Bank # 1.
					3	Low side of 220 / 110 kV Transformer Bank # 2.
					4	500 kV Line to Azerbaijan.
					5	110 kV Line # 1.
					6	110 kV Line # 2.
					7	110 kV Line # 3.
					8	110 kV Line # 4.
					9	110 kV Line # 5.
					10	110 kV Line # 6.
					11	500 kV Substation, Auxiliary power used in the substation.
					12	220 kV Substation, Auxiliary power used in the substation.
					13	110 kV Substation, Auxiliary power used in the substation.
					14	500 kV Substation, Auxiliary power leaving the substation.
					15	220 kV Substation, Auxiliary power leaving the substation.
					16	110 kV Substation, Auxiliary power leaving the substation.

Table 18 500 / 220 kV Gardaboni Thermal Electric Plant and Substation

Level	Station	Meters in Station (Fichtner Count)	Meters in Station (Hagler Bailly Count)	Meters in Network	Hagler Bailly List	Description of Measurement
500 / 220 kV	Gardabani TEP	24	33		1	Generating Unit # 1, Net Injection to Grid.
					2	Generating Unit # 2, Net Injection to Grid.
					3	Generating Unit # 3, Net Injection to Grid.
					4	Generating Unit # 4, Net Injection to Grid.
					5	Generating Unit # 5, Net Injection to Grid.
					6	Generating Unit # 6, Net Injection to Grid.
					7	Generating Unit # 7, Net Injection to Grid.
					8	Generating Unit # 8, Net Injection to Grid.
					9	Generating Unit # 9, Net Injection to Grid.
					10	Generating Station Auxiliary Energy From the Grid (Units 1 - 7).
					11	Generating Station Auxiliary Energy From the Grid (Units 8 & 9).
					12	Low side, 500 / 220 kV Transformer Bank.
					13	Low side, 220 / 110 kV Transformer Bank.
					14	110 kV Line # 1.
					15	110 kV Line # 2.
					16	110 kV Line # 3.
					17	110 kV Line # 4.
					18	110 kV Line # 5.
					19	110 kV Line # 6.
					20	110 kV Line # 7.
					21	110 kV Line # 8.
					22	Low side of 110 / 35 kV Transformer # 1.
					23	Low side of 110 / 35 kV Transformer # 2.
					24	Low side of 110 / 35 kV Transformer # 3.
					25	Low side of 110 / 35 kV Transformer # 4.
					26	Low side of 110 / 35 kV Transformer # 5.
					27	500 kV Substation, Auxiliary power used in the substation.
					28	220 kV Substation, Auxiliary power used in the substation.
					29	110 kV Substation, Auxiliary power used in the substation.

Level	Station	Meters in Station (Fichtner Count)	Meters in Station (Hagler Bailly Count)	Meters in Network	Hagler Bailly List	Description of Measurement
					30	500 kV Substation, Auxiliary power leaving the substation.
					31	220 kV Substation, Auxiliary power leaving the substation.
					32	110 kV Substation, Auxiliary power leaving the substation.
					33	35 kV Line to Azerbaijan.

Table 19 500 / 220 kV Sub - Totals.

Level	Station	Meters in Station (Fichtner Count)	Meters in Station (Hagler Bailly Count)	Meters in Network	Hagler Bailly List	Description of Measurement
500 /220 kV	Sub-total 500 / 220	59	85			

Table 20 220 / 110 kV Vektor Substation

Level	Station	Meters in Station (Fichtner Count)	Meters in Station (Hagler Bailly Count)	Meters in Network	Hagler Bailly List	Description of Measurement
220 / 110 kV Substation	Vektor	9	8		1	Low side of 220 / 110 kV Transformer Bank # 1.
					2	Low side of 220 / 110 kV Transformer Bank # 2.
					3	110 kV Line # 1.
					4	110 kV Line # 2.
					5	220 kV Substation, Auxiliary power used in the substation.
					6	110 kV Substation, Auxiliary power used in the substation.
					7	220 kV Substation, Auxiliary power leaving the substation.
					8	110 kV Substation, Auxiliary power leaving the substation.

Table 21 220 / 110 kV Batumi Substation

Level	Station	Meters in Station (Fichtner Count)	Meters in Station (Hagler Bailly Count)	Meters in Network	Hagler Bailly List	Description of Measurement
220 / 110 kV	Batumi	11	12		1	Low side of 220 / 110 kV Bank # 1.
					2	Low side of 220 / 110 kV Bank # 2.
					3	110 kV Line # 1.
					4	110 kV Line # 2.
					5	110 kV Line # 3.
					6	110 kV Line # 4.
					7	220 kV Substation, Auxiliary power used in the substation.
					8	220 kV Substation, Auxiliary power used in the substation.
					9	110 kV Substation, Auxiliary power leaving the substation.
					10	110 kV Substation, Auxiliary power leaving the substation.
					11	Low side, 110 / 35 kV Bank.
					12	220 kV Line to Turkey.

Table 22 220 / 110 kV Ladzhanuri Hydro Electric Plant and Substation

Level	Station	Meters in Station (Fichtner Count)	Meters in Station (Hagler Bailly Count)	Meters in Network	Hagler Bailly List	Description of Measurement
220 / 110 kV	Ladzhanuri HEP	10	16		1	Low side, 220 / Generator Bus Transformer Bank # 1.
					2	Low side, 220 / Generator Bus Transformer Bank # 2.
					3	Generating Unit # 1, Net Injection to Grid.
					4	Generating Unit # 2, Net Injection to Grid.
					5	Generating Unit # 3, Net Injection to Grid.
					6	Generating Station Auxiliary Energy From the Grid (Units 1 - 2).
					7	Low side, 110 kV / Generator Bus Transformer Bank # 1.
					8	Low side, 110 kV / Generator Bus Transformer Bank # 2.
					9	Low side, Generator Bus / 35 kV Transformer Bank # 1.
					10	Low side, Generator Bus / 35 kV Transformer Bank # 2.
					11	110 kV Line # 1.
					12	110 kV Line # 2.
					13	220 kV Substation, Auxiliary power used in the substation.
					14	110 kV Substation, Auxiliary power used in the substation.
					15	220 kV Substation, Auxiliary power leaving the substation.
					16	110 kV Substation, Auxiliary power leaving the substation.

Table 23 220 / 110 kV Chaltubo Substation

Level	Station	Meters in Station (Fichtner Count)	Meters in Station (Hagler Bailly Count)	Meters in Network	Hagler Bailly List	Description of Measurement
220 / 110 kV	Chaltubo	9	11		1	Low side, 220 / 110 kV Transformer Bank # 1.
					2	Low side, 220 / 110 kV Transformer Bank # 2.
					3	110 kV Line # 1.
					4	110 kV Line # 2.
					5	110 kV Line # 3.
					6	110 kV Line # 4.
					7	110 kV Line # 5.
					8	220 kV Substation, Auxiliary power used in the substation.
					9	110 kV Substation, Auxiliary power used in the substation.
					10	220 kV Substation, Auxiliary power leaving the substation.
					11	110 kV Substation, Auxiliary power leaving the substation.

Table 24 220 / 110 kV Mendji Substation

Level	Station	Meters in Station (Fichtner Count)	Meters in Station (Hagler Bailly Count)	Meters in Network	Hagler Bailly List	Description of Measurement
220 / 110 kV	Mendji	9	17		1	Low side, 220 / 110 kV Transformer Bank # 1.
					2	Low side, 220 / 110 kV Transformer Bank # 2.
					3	110 kV Line # 1.
					4	110 kV Line # 2.
					5	110 kV Line # 3.
					6	110 kV Line # 4.
					7	110 kV Line # 5.
					8	110 kV Line # 6.
					9	110 kV Line # 7.
					10	Low side of 110 kV / Secondary Bank # 1.
					11	Low side of 110 kV / Tertiary Bank # 1.
					12	Low side of 110 kV / Secondary Bank # 2.
					13	Low side of 110 kV / Tertiary Bank # 2.
					14	220 kV Substation, Auxiliary power used in the substation.
					15	110 kV Substation, Auxiliary power used in the substation.
					16	220 kV Substation, Auxiliary power leaving the substation.
					17	110 kV Substation, Auxiliary power leaving the substation.

Table 25 220 / 110 kV Kutaisi Substation

Level	Station	Meters in Station (Fichtner Count)	Meters in Station (Hagler Bailly Count)	Meters in Network	Hagler Bailly List	Description of Measurement
220 / 110 kV	Kutaisi	12	11		1	Low side, 220 / 110 kV Transformer Bank # 1.
					2	Low side, 220 / 110 kV Transformer Bank # 2.
					3	110 kV Line # 1.
					4	110 kV Line # 2.
					5	110 kV Line # 3.
					6	Low side of 110 / 35 kV Transformer Bank # 1.
					7	Low side of 110 / 35 kV Transformer Bank # 2.
					8	220 kV Substation, Auxiliary power used in the substation.
					9	110 kV Substation, Auxiliary power used in the substation.
					10	220 kV Substation, Auxiliary power leaving the substation.
					11	110 kV Substation, Auxiliary power leaving the substation.

Table 26 220 / 110 kV Kashhuri Substation

Level	Station	Meters in Station (Fichtner Count)	Meters in Station (Hagler Bailly Count)	Meters in Network	Hagler Bailly List	Description of Measurement
220 / 110 kV	Kashhuri	9	13		1	Low side, 220 / 110 kV Transformer Bank # 1.
					2	Low side, 220 / 110 kV Transformer Bank # 2.
					3	110 kV Line # 1.
					4	110 kV Line # 2.
					5	110 kV Line # 3.
					6	110 kV Line # 4.
					7	110 kV Line # 5.
					8	Low side of 110 / 35 kV Transformer Bank # 1.
					9	Low side of 110 / 35 kV Transformer Bank # 2.
					10	220 kV Substation, Auxiliary power used in the substation.
					11	110 kV Substation, Auxiliary power used in the substation.
					12	220 kV Substation, Auxiliary power leaving the substation.
					13	110 kV Substation, Auxiliary power leaving the substation.

Table 27 220 / 110 kV Gori Substation

Level	Station	Meters in Station (Fichtner Count)	Meters in Station (Hagler Bailly Count)	Meters in Network	Hagler Bailly List	Description of Measurement
220 / 110 kV	Gori	9	10		1	Low side, 220 / 110 kV Transformer Bank # 1.
					2	Low side, 220 / 110 kV Transformer Bank # 2.
					3	Low side, 110 /; 35 kV Transformer Bank # 1.
					4	Low side, 110 /; 35 kV Transformer Bank # 2.
					5	110 kV Line # 1.
					6	110 kV Line # 2.
					7	220 kV Substation, Auxiliary power used in the substation.
					8	110 kV Substation, Auxiliary power used in the substation.
					9	220 kV Substation, Auxiliary power leaving the substation.
					10	110 kV Substation, Auxiliary power leaving the substation.

Table 28 220 / 110 kV Lisi Substation

Level	Station	Meters in Station (Fichtner Count)	Meters in Station (Hagler Bailly Count)	Meters in Network	Hagler Bailly List	Description of Measurement
220 / 110 kV	Lisi	12	14		1	Low Side, 220 / 110 kV Transformer Bank # 1.
					2	Low Side, 220 / 110 kV Transformer Bank # 2.
					3	110 kV Line # 1.
					4	110 kV Line # 2.
					5	110 kV Line # 3.
					6	110 kV Line # 4.
					7	110 kV Line # 5.
					8	110 kV Line # 6.
					9	110 kV Line # 7.
					10	110 kV Line # 8.
					11	220 kV Substation, Auxiliary power used in the substation.
					12	110 kV Substation, Auxiliary power used in the substation.
					13	220 kV Substation, Auxiliary power leaving the substation.
					14	110 kV Substation, Auxiliary power leaving the substation.

Table 29 220 / 100 kV Didube Substation

Level	Station	Meters in Station (Fichtner Count)	Meters in Station (Hagler Bailly Count)	Meters in Network	Hagler Bailly List	Description of Measurement
220 / 110 kV	Didube	9	12		1	Low side, 220 / 110 kV Transformer Bank # 1.
					2	Low side, 220 / 110 kV Transformer Bank # 2.
					3	110 kV Line # 1.
					4	110 kV Line # 2.
					5	110 kV Line # 3.
					6	110 kV Line # 4.
					7	Low side, 110 / 35 kV Transformer Bank # 1.
					8	Low side, 110 / 35 kV Transformer Bank # 2.
					9	220 kV Substation, Auxiliary power used in the substation.
					10	110 kV Substation, Auxiliary power used in the substation.
					11	220 kV Substation, Auxiliary power leaving the substation.
					12	110 kV Substation, Auxiliary power leaving the substation.

Table 30 220 / 110 kV Marneuli Substation

Level	Station	Meters in Station (Fichtner Count)	Meters in Station (Hagler Bailly Count)	Meters in Network	Hagler Bailly List	Description of Measurement
220 / 110 kV	Marneuli 2	10	14		1	Low side, 220 / 110 kV Transformer Bank # 1.
					2	Low side, 220 / 110 kV Transformer Bank # 2.
					3	110 kV Line # 1.
					4	110 kV Line # 2.
					5	110 kV Line # 3.
					6	110 kV Line # 4.
					7	110 kV Line # 5.
					8	110 kV Line # 6.
					9	Low side, 110 / 35 kV Transformer Bank # 1.
					10	Low side, 110 / 35 kV Transformer Bank # 2.
					11	220 kV Substation, Auxiliary power used in the substation.
					12	110 kV Substation, Auxiliary power used in the substation.
					13	220 kV Substation, Auxiliary power leaving the substation.
					14	110 kV Substation, Auxiliary power leaving the substation.

Table 31 220 / 110 kV Gldani Substation

Level	Station	Meters in Station (Fichtner Count)	Meters in Station (Hagler Bailly Count)	Meters in Network	Hagler Bailly List	Description of Measurement
220 / 110 kV	Gldani	12	18		1	Low side secondary, 220 / 110 kV Transformer Bank # 1.
					2	Low side tertiary, 220 / 110 kV Transformer Bank # 1.
					3	Low side secondary, 220 / 110 kV Transformer Bank # 2.
					4	Low side tertiary, 220 / 110 kV Transformer Bank # 2.
					5	110 kV Line # 1.
					6	110 kV Line # 2.
					7	110 kV Line # 3.
					8	110 kV Line # 4.
					9	110 kV Line # 5.
					10	110 kV Line # 6.
					11	110 kV Line # 7.
					12	110 kV Line # 6.
					13	110 kV Line # 9.
					14	110 kV Line # 10.
					15	220 kV Substation, Auxiliary power used in the substation.
					16	110 kV Substation, Auxiliary power used in the substation.
					17	220 kV Substation, Auxiliary power leaving the substation.
					18	110 kV Substation, Auxiliary power leaving the substation.

Table 32 220 / 110 kV Navtlugi Substation

Level	Station	Meters in Station (Fichtner Count)	Meters in Station (Hagler Bailly Count)	Meters in Network	Hagler Bailly List	Description of Measurement
220 / 110 kV	Navtlugi	9	16		1	Low side, 220 / 110 kV Transformer Bank # 1.
					2	Low side, 220 / 110 kV Transformer Bank # 2.
					3	Low side, 110 / 35 kV Transformer Bank # 1.
					4	Low side, 110 / 35 kV Transformer Bank # 2.
					5	Low side, 110 / 35 kV Transformer Bank # 3.
					6	Low side, 110 / 35 kV Transformer Bank # 4.
					7	110 kV Line # 1.
					8	110 kV Line # 2.
					9	110 kV Line # 3.
					10	110 kV Line # 4.
					11	110 kV Line # 5.
					12	110 kV Line # 6.
					13	220 kV Substation, Auxiliary power used in the substation.
					14	110 kV Substation, Auxiliary power used in the substation.
					15	220 kV Substation, Auxiliary power leaving the substation.
					16	110 kV Substation, Auxiliary power leaving the substation.

Table 33 220 / 110 kV Rustavi Substation

Level	Station	Meters in Station (Fichtner Count)	Meters in Station (Hagler Bailly Count)	Meters in Network	Hagler Bailly List	Description of Measurement
220 / 110 kV	Rustavi	15	21		1	Low side, 220 / 110 kV Transformer Bank # 1.
					2	Low side, 220 / 110 kV Transformer Bank # 2.
					3	110 kV Line # 1.
					4	110 kV Line # 2.
					5	110 kV Line # 3.
					6	110 kV Line # 4.
					7	110 kV Line # 5.
					8	110 kV Line # 6.
					9	110 kV Line # 7.
					10	110 kV Line # 6.
					11	110 kV Line # 9.
					12	110 kV Line # 10.
					13	110 kV Line # 11.
					14	110 kV Line # 12.
					15	110 kV Line # 13.
					16	110 kV Line # 14.
					17	110 kV Line # 15.
					18	220 kV Substation, Auxiliary power used in the substation.
					19	110 kV Substation, Auxiliary power used in the substation.
					20	220 kV Substation, Auxiliary power leaving the substation.
					21	110 kV Substation, Auxiliary power leaving the substation.

Table 34 220 / 110 kV Gurdjani Substation

Level	Station	Meters in Station (Fichtner Count)	Meters in Station (Hagler Bailly Count)	Meters in Network	Hagler Bailly List	Description of Measurement
220 / 110 kV	Gurdjani	9	12		1	Low side, 220 / 110 kV Transformer Bank # 1.
					2	Low side, 220 / 110 kV Transformer Bank # 2.
					3	110 kV Line # 1.
					4	110 kV Line # 2.
					5	110 kV Line # 3.
					6	110 kV Line # 4.
					7	Low side, 110 / 35 kV Transformer Bank # 1.
					8	Low side, 110 / 35 kV Transformer Bank # 2.
					9	220 kV Substation, Auxiliary power used in the substation.
					10	110 kV Substation, Auxiliary power used in the substation.
					11	220 kV Substation, Auxiliary power leaving the substation.
					12	110 kV Substation, Auxiliary power leaving the substation.

Table 35 220 / 110 kV Khrami 2 Hydro Electric Plant and Substation

Level	Station	Meters in Station (Fichtner Count)	Meters in Station (Hagler Bailly Count)	Meters in Network	Hagler Bailly List	Description of Measurement
220 / 110 kV	Khrami 2 HEP	9	12		1	Generating Unit # 1, Net Injection to Grid.
					2	Generating Unit # 2, Net Injection to Grid.
					3	Generating Station Auxiliary Energy From the Grid (Units 1 - 2).
					4	Tertiary Side, 220 / 110 kV Transformer Bank # 1.
					5	Tertiary Side, 220 / 110 kV Transformer Bank # 2.
					6	110 kV Line # 1.
					7	110 kV Line # 2.
					8	110 kV Line # 3.
					9	220 kV Substation, Auxiliary power used in the substation.
					10	110 kV Substation, Auxiliary power used in the substation.
					11	220 kV Substation, Auxiliary power leaving the substation.
					12	110 kV Substation, Auxiliary power leaving the substation.

Table 36 220 / 110 kV Jinvali Hydro Electric Plant and Substation

Level	Station	Meters in Station (Fichtner Count)	Meters in Station (Hagler Bailly Count)	Meters in Network	Hagler Bailly List	Description of Measurement
220 / 110 kV	Jinvali HEP	13	12		1	Low side, 220 / 110 kV Transformer Bank # 1.
					2	Low side, 220 / 110 kV Transformer Bank # 2.
					3	Generating Unit # 1, Net Injection to Grid.
					4	Generating Unit # 2, Net Injection to Grid.
					5	Generating Unit # 3, Net Injection to Grid.
					6	Generating Unit # 4, Net Injection to Grid.
					7	Generating Station Auxiliary Energy From the Grid (Units 1 - 4).
					8	Low Side, Generator Bus / 35 kV Transformer Bank.
					9	220 kV Substation, Auxiliary power used in the substation.
					10	110 kV Substation, Auxiliary power used in the substation.
					11	220 kV Substation, Auxiliary power leaving the substation.
					12	110 kV Substation, Auxiliary power leaving the substation.

Table 37 220 / 110 kV Phero Substation

Level	Station	Meters in Station (Fichtner Count)	Meters in Station (Hagler Bailly Count)	Meters in Network	Hagler Bailly List	Description of Measurement
220 / 110 kV	Phero	0	4		1	Low side, 220 / 110 kV Transformer.
	[Not listed in Fichtner; however, this substation appears on the transmission system map.]				2	220 kV Substation, Auxiliary power used in the substation.
					3	110 kV Substation, Auxiliary power used in the substation.
					4	220 kV Substation, Auxiliary power leaving the substation.
					5	110 kV Substation, Auxiliary power leaving the substation.

Table 38 220 / 110 kV Sub - Totals

Level	Station	Meters in Station (Fichtner Count)	Meters in Station (Hagler Bailly Count)	Meters in Network	Hagler Bailly List	Description of Measurement
220 / 110 kV	Sub-total 220 / 110	176	233			

Table 39 110 kV Meters In the Network

Level	Station	Meters in Station (Fichtner Count)	Meters in Station (Hagler Bailly Count)	Meters in Network	Hagler Bailly List	Description of Measurement
110 kV				60	1	What are these for? Where at?
					2	
					3	
					4	
					5	
					6	
					7	
					8	
					9	
					10	
					11	
					12	
					13	
					14	
					15	
					16	
					17	
					18	
					19	
					20	
					21	
					22	
					23	
					24	
					25	
					26	
					27	
					28	
					29	

Level	Station	Meters in Station (Fichtner Count)	Meters in Station (Hagler Bailly Count)	Meters in Network	Hagler Bailly List	Description of Measurement
					30	
					31	
					32	
					33	
					34	
					35	
					36	
					37	
					38	
					39	
					40	
					41	
					42	
					43	
					44	
					45	
					46	
					47	
					48	
					49	
					50	
					51	
					52	
					53	
					54	
					55	
					56	
					57	
					58	
					59	
					60	

Level	Station	Meters in Station (Fichtner Count)	Meters in Station (Hagler Bailly Count)	Meters in Network	Hagler Bailly List	Description of Measurement
110 kV	Sub - Total 60 Special		0	60		

Table 40 110 kV Rioni Hydro Electric Plant and Substation

Level	Station	Meters in Station (Fichtner Count)	Meters in Station (Hagler Bailly Count)	Meters in Network	Hagler Bailly List	Description of Measurement
110 kV	Rioni HEP	8	9		1	Generating Unit # 1, Net Injection to Grid.
					2	Generating Unit # 2, Net Injection to Grid.
					3	Generating Unit # 3, Net Injection to Grid.
					4	Generating Unit # 4, Net Injection to Grid.
					5	Generating Station Auxiliary Energy From the Grid (Units 1 - 4).
					6	Low side, tertiary, GSU # 3 110 / 35 / Generator Bus.
					7	Low side, tertiary, GSU # 4 110 / 35 / Generator Bus.
					8	110 kV Substation, Auxiliary power used in the substation.
					9	110 kV Substation, Auxiliary power leaving the substation.

Table 41 110 kV Gutami Hydro Electric Plants 1 Through 4 and Substations

Level	Station	Meters in Station (Fichtner Count)	Meters in Station (Hagler Bailly Count)	Meters in Network	Hagler Bailly List	Description of Measurement
110 kV	Gutami HEP 1 - 4	2	13		1	Generating Unit # 1, Net Injection to Grid.
					2	Generating Unit # 2, Net Injection to Grid.
					3	Generating Unit # 3, Net Injection to Grid.
					4	Generating Unit # 4, Net Injection to Grid.
					5	Generating Station Auxiliary Energy From the Grid (Units 1 - 4).
					6	High side, 110 kV / Generator Bus, Transformer Bank # 1.
					7	High side, 110 kV / Generator Bus, Transformer Bank # 2.
					8	Tertiary, 110 kV / 35 kV / Generator Bus, Transformer Bank # 1.
					9	Tertiary, 110 kV / 35 kV / Generator Bus, Transformer Bank # 2.
					10	Low side, Generator Bus / 35 kV, Transformer Bank # 1.
					11	Low side, Generator Bus / 35 kV, Transformer Bank # 2.
					12	110 kV Substation # 1, Auxiliary power used in the substation.
					13	110 kV Substation # 1, Auxiliary power leaving the substation.

Table 42 110 kV Gutami Hydro Electric Plants 5 Through 7 and Substations

Level	Station	Meters in Station (Fichtner Count)	Meters in Station (Hagler Bailly Count)	Meters in Network	Hagler Bailly List	Description of Measurement
110 kV	Gutami HEP 5 - 7	2	7		1	Generating Unit # 5, Net Injection to Grid.
					2	Generating Unit # 6, Net Injection to Grid.
					3	Generating Unit # 7, Net Injection to Grid.
					4	Generating Station Auxiliary Energy From the Grid (Units 5 - 7).
					5	High side, 110 kV / Generator Bus, Transformer Bank # 3.
					6	110 kV Substation # 2, Auxiliary power used in the substation.
					7	110 kV Substation # 2, Auxiliary power leaving the substation.

Table 43 110 kV Tkibuli Hydro Electric Plant and Substation

Level	Station	Meters in Station (Fichtner Count)	Meters in Station (Hagler Bailly Count)	Meters in Network	Hagler Bailly List	Description of Measurement
110 kV	Tkibuli HEP	4	14		1	Generating Unit # 1, Net Injection to Grid.
					2	Generating Unit # 2, Net Injection to Grid.
					3	Generating Unit # 3, Net Injection to Grid.
					4	Generating Unit # 4, Net Injection to Grid.
					5	Generating Station Auxiliary Energy From the Grid (Units 1 - 4).
					6	110 kV Line # 1 to Zestaphoni
					7	110 kV Line # 2 to Zestaphoni
					8	110 kV Line to Shori.
					9	Low side of 110 / Generator Bus Transformer Bank # 1.
					10	Low side of 110 / Generator Bus Transformer Bank # 2.
					11	Low side of Generator Bus / 35 kV Transformer Bank # 1.
					12	Low side of Generator Bus / 35 kV Transformer Bank # 2.
					13	110 kV Substation, Auxiliary power used in the substation.
					14	110 kV Substation, Auxiliary power leaving the substation.

Table 44 110 kV Shaori Hydro Electric Plant and Substation

Level	Station	Meters in Station (Fichtner Count)	Meters in Station (Hagler Bailly Count)	Meters in Network	Hagler Bailly List	Description of Measurement
110 kV	Shaori HEP	5	11		1	Generating Unit # 1, Net Injection to Grid.
					2	Generating Unit # 2, Net Injection to Grid.
					3	Generating Unit # 3, Net Injection to Grid.
					4	Generating Unit # 4, Net Injection to Grid.
					5	Generating Station Auxiliary Energy From the Grid (Units 1 - 4).
					6	Low side, 110 kV / Generator Bus, Transformer Bank # 1.
					7	Low side, 110 kV / Generator Bus, Transformer Bank # 2.
					8	Low side of Generator Bus / 35 kV Transformer Bank # 1.
					9	Low side of Generator Bus / 35 kV Transformer Bank # 2.
					10	110 kV Substation, Auxiliary power used in the substation.
					11	110 kV Substation, Auxiliary power leaving the substation.

Table 45 110 kV Zahasi Hydro Electric Plant and Substation

Level	Station	Meters in Station (Fichtner Count)	Meters in Station (Hagler Bailly Count)	Meters in Network	Hagler Bailly List	Description of Measurement
110 kV	Zahesi HEP	8	9		1	Generating Unit # 1, Net Injection to Grid.
					2	Generating Unit # 2, Net Injection to Grid.
					3	Generating Station Auxiliary Energy From the Grid (Units 1 - 2).
					4	High side, 110 kV / Generator Bus, Transformer Bank # 1.
					5	High side, 110 kV / Generator Bus, Transformer Bank # 2.
					6	Tertiary, 110 / 35 kV Transformer Bank # 1.
					7	Tertiary, 110 / 35 kV Transformer Bank # 2.
					8	110 kV Substation, Auxiliary power used in the substation.
					9	110 kV Substation, Auxiliary power leaving the substation.

Table 46 110 kV Khrami 1 Hydro Electric Plant and Substation

Level	Station	Meters in Station (Fichtner Count)	Meters in Station (Hagler Bailly Count)	Meters in Network	Hagler Bailly List	Description of Measurement
110 kV	Khrami 1 HEP	4	8		1	Generating Unit # 1, Net Injection to Grid.
					2	Generating Unit # 2, Net Injection to Grid.
					3	Generating Unit # 3, Net Injection to Grid.
					4	Generating Station Auxiliary Energy From the Grid (Units 1 - 4).
					5	110 kV Substation, Auxiliary power used in the substation.
					6	110 kV Substation, Auxiliary power leaving the substation.
					7	110 kV / Generator Bus, Transformer Bank # 4.
					8	110 kV / 35 kV Transformer Bank # 5.

Table 47 110 kV Samtradia Substation

Level	Station	Meters in Station (Fichtner Count)	Meters in Station (Hagler Bailly Count)	Meters in Network	Hagler Bailly List	Description of Measurement
110 kV	Samtredia	5	12		1	Low side, 110 / 35 kV Transformer Bank # 1.
					2	Low side, 110 / 35 kV Transformer Bank # 2.
					3	110 kV Line # 1 to Wartziche.
					4	110 kV Line # 2 to Wartziche.
					5	110 kV Line # 1.
					6	110 kV Line # 2.
					7	110 kV Line # 3.
					8	110 kV Line # 4.
					9	110 kV Line # 5.
					10	110 kV Line # 6.
					11	110 kV Substation, Auxiliary power used in the substation.
					12	110 kV Substation, Auxiliary power leaving the substation.

Table 48 110 kV Vartsikhe Hydro Electric Plants and Substations

Level	Station	Meters in Station (Fichtner Count)	Meters in Station (Hagler Bailly Count)	Meters in Network	Hagler Bailly List	Description of Measurement
110 kV	Vartsikhe HEP	6	33		1	Generating Unit # 1, Net Injection to Grid.
					2	Generating Unit # 2, Net Injection to Grid.
					3	Generating Station Auxiliary Energy From the Grid (Units 1 - 2).
					4	Low side, 110 kV / Generator Bus Transformer Bank # 1.
					5	Low side secondary, Generator Bus Transformer (Units 1 & 2).
					6	Low side tertiary, Generator Bus Transformer (Units 1 & 2).
					7	110 kV Substation # 1, Auxiliary power used in the substation.
					8	110 kV Substation # 1, Auxiliary power leaving the substation.
					9	Generating Unit # 3, Net Injection to Grid.
					10	Generating Unit # 4, Net Injection to Grid.
					11	Generating Station Auxiliary Energy From the Grid (Units 3 & 4).
					12	Low side, 110 kV / Generator Bus Transformer Bank # 2.
					13	Low side secondary, Generator Bus Transformer (Units 3 & 4).
					14	Low side tertiary, Generator Bus Transformer (Units 3 & 4).
					15	110 kV Substation # 2, Auxiliary power used in the substation.
					16	110 kV Substation # 2, Auxiliary power leaving the substation.
					17	High side, 110 / 35 kV / ?? kV Transformer at Substation # 2.
					18	Generating Unit # 5, Net Injection to Grid.
					19	Generating Unit # 6, Net Injection to Grid.
					20	Generating Station Auxiliary Energy From the Grid (Units 5 & 6).
					21	Low side, 110 kV / Generator Bus Transformer Bank # 3.
					22	Low side secondary, Generator Bus Transformer (Units 5 & 6).
					23	Low side tertiary, Generator Bus Transformer (Units 5 & 6).
					24	110 kV Substation # 3, Auxiliary power used in the substation.
					25	110 kV Substation # 3, Auxiliary power leaving the substation.
					26	Generating Unit # 7, Net Injection to Grid.
					27	Generating Unit # 8, Net Injection to Grid.
					28	Generating Station Auxiliary Energy From the Grid (Units 7 & 8).
					29	Low side, 110 kV / Generator Bus Transformer Bank # 4.

Level	Station	Meters in Station (Fichtner Count)	Meters in Station (Hagler Bailly Count)	Meters in Network	Hagler Bailly List	Description of Measurement
					30	Low side secondary, Generator Bus Transformer (Units 7 & 8).
					31	Low side tertiary, Generator Bus Transformer (Units 7 & 8).
					32	110 kV Substation # 4, Auxiliary power used in the substation.
					33	110 kV Substation # 4, Auxiliary power leaving the substation.

Table 49 110 kV Mtavari Arkhi Substation

Level	Station	Meters in Station (Fichtner Count)	Meters in Station (Hagler Bailly Count)	Meters in Network	Hagler Bailly List	Description of Measurement
110 kV	Mtavari Arkhi	5	5		1	[Not completed in this Report.]
	Also listed as				2	
	Rustavi – Main				3	
	Channel				4	
					5	

Table 50 Auxiliary Power At Load Dispatch Centers

Level	Station	Meters in Station (Fichtner Count)	Meters in Station (Hagler Bailly Count)	Meters in Network	Hagler Bailly List	Description of Measurement
-----	LDC Auxiliaries	2	2			What location?
						What location?

Table 51 110 kV Sub - Totals

Level	Station	Meters in Station (Fichtner Count)	Meters in Station (Hagler Bailly Count)	Meters in Network	Hagler Bailly List	Description of Measurement
	Sub-Total 110 kV	51	123			
	Total Project					

Table 52 220 / 110 kV Bzipi Substation

Level	Station	Meters in Station (Fichtner Count)	Meters in Station (Hagler Bailly Count)	Meters in Network	Hagler Bailly List	Description of Measurement
Abkasia	Bzipi	2	14		1	Low side, 220 / 110 kV Transformer Bank # 1.
					2	Low side, 220 / 110 kV Transformer Bank # 2.
					3	110 kV Line # 1.
					4	110 kV Line # 2.
					5	110 kV Line # 3.
					6	110 kV Line # 4.
					7	110 kV Line # 5.
					8	110 kV Line # 6.
					9	110 kV Line # 7.
					10	220 kV Line to Russia.
					11	220 kV Substation, Auxiliary power used in the substation.
					12	110 kV Substation, Auxiliary power used in the substation.
					13	220 kV Substation, Auxiliary power leaving the substation.
					14	110 kV Substation, Auxiliary power leaving the substation.

Table 53 220 / 110 kV Sokhumi Substation

Level	Station	Meters in Station (Fichtner Count)	Meters in Station (Hagler Bailly Count)	Meters in Network	Hagler Bailly List	Description of Measurement
Abkasia	Sokhumi	2	10		1	Low side, 220 / 110 kV Transformer Bank # 1.
					2	Low side, 220 / 110 kV Transformer Bank # 2.
					3	110 kV Line # 1.
					4	110 kV Line # 2.
					5	110 kV Line # 3.
					6	110 kV Line # 4.
					7	220 kV Substation, Auxiliary power used in the substation.
					8	110 kV Substation, Auxiliary power used in the substation.
					9	220 kV Substation, Auxiliary power leaving the substation.
					10	110 kV Substation, Auxiliary power leaving the substation.

Table 54 220 / 110 kV Tkvarcheli Plant and Substation

Level	Station	Meters in Station (Fichtner Count)	Meters in Station (Hagler Bailly Count)	Meters in Network	Hagler Bailly List	Description of Measurement
Abkasia	Tkvarcheli	2	15		1	Generating Unit # 1, Net Injection to Grid.
					2	Generating Unit # 2, Net Injection to Grid.
					3	Generating Station Auxiliary Energy From the Grid (Units 1).
					4	Generating Station Auxiliary Energy From the Grid (Units 2).
					5	Low side, 220 / 110 kV Transformer Bank.
					6	110 kV Line # 1.
					7	110 kV Line # 2.
					8	110 kV Line # 3.
					9	High side, 110 / 35 kV Transformer Bank # 1.
					10	High side, 110 / 35 kV Transformer Bank # 2.
					11	High side, 110 / 35 kV Transformer Bank # 3.
					12	220 kV Substation, Auxiliary power used in the substation.
					13	110 kV Substation, Auxiliary power used in the substation.
					14	220 kV Substation, Auxiliary power leaving the substation.
					15	110 kV Substation, Auxiliary power leaving the substation.

Table 55 220 / 110 kV Vardnili Plant and Substation

Level	Station	Meters in Station (Fichtner Count)	Meters in Station (Hagler Bailly Count)	Meters in Network	Hagler Bailly List	Description of Measurement
Abkasia	Vardnili	5	9		1	Generating Unit # 1, Net Injection to Grid.
					2	Generating Unit # 2, Net Injection to Grid.
					3	Generating Unit # 3, Net Injection to Grid.
					4	Generating Station Auxiliary Energy From the Grid (Units 1 - 3).
					5	Tertiary, 220 / 110 kV on Unit # 3.
					6	220 kV Substation, Auxiliary power used in the substation.
					7	110 kV Substation, Auxiliary power used in the substation.
					8	220 kV Substation, Auxiliary power leaving the substation.
					9	110 kV Substation, Auxiliary power leaving the substation.

Table 56 Abkasia Sub - Totals

Level	Station	Meters in Station (Fichtner Count)	Meters in Station (Hagler Bailly Count)	Meters in Network	Hagler Bailly List	Description of Measurement
Abkasia	Total in Abkasia	11	48	0		

Table 57 Sub - Totals and Totals

Level	Station	Meters in Station (Fichtner Count)	Meters in Station (Hagler Bailly Count)	Meters in Network	Hagler Bailly List	Description of Measurement
	Sub-total 500 / 220 kV	59	85	0		
	Sub-total 220 / 110 kV	176	233	0		
	Sub-total 60 @ 110 kV	0	0	60		
	Sub-total 110 kV	51	123	0		
	Grand Total	286	441	60		
	Sub-total Abkasia	11	48	0		
	Super Grand Total	297	489	60		
	Fichtner Report, Column 1			297		Titled "Meters in Station," Annex 10-1, Page 7 of 12.
	Fichtner Report, Column 2			60		Titled "Metering within the Network," Annex 10-1, Page 7 of 12.
	Round Up for Aide - Memoire			3		Deduced this number as 3 since the difference is 3.
	Total - Aide - Memoire.			360		
	Hagler Bailly Total			489		
	Difference			129		$1,400.00 each (estimated).
	Funding needed for 129 meters.			$180,600.00		

Index

PREVIOUS PAGE BLANK

A

ABB 13, 35, 59
accuracy8, 13, 16, 17, 18, 19, 21, 29, 36, 41, 43, 44, 54, 70, 71, 74
AES Telasi 29, 59
Aide - Memoire 7, 11, 30, 31, 33, 42, 55, 61, 136
Aide – Memoire 33
Alpha 13, 35, 61
American National Standards Institute 59
American Wire Gauge 59
ANSI 17, 59
Auxiliary6, 27, 28, 73, 74, 82, 89, 90, 91, 92, 93, 95, 96, 97, 98, 99, 100, 101, 102, 103, 104, 105, 106, 107, 108, 109, 110, 111, 112, 117, 118, 119, 120, 121, 122, 123, 124, 125, 126, 128, 130, 131, 132, 133
auxiliary power .. 21, 25, 26, 28, 70, 71, 73, 74, 75, 82
AWG 11, 41, 42, 55, 59

B

back up 20
bias 16, 17, 63
bonding 64
Brooks 37
bus 65

C

cable 8, 11, 37, 41, 42, 55
carrier 54
CD-ROM 59, 85
cell 14
cellular 54
cellular phone 54
central computer 21
compressors 73
conduit 8
consumption 15, 59, 60, 74
control house 42
copper 11, 25, 41, 42, 55
correction factor 43
cover 11, 36, 37, 55, 79, 80, 82
covers 79, 80
CT8, 12, 20, 35, 41, 42, 43, 44, 45, 56, 59, 69, 79, 80, 81, 82
CTs5, 8, 11, 12, 17, 18, 20, 28, 35, 36, 39, 41, 42, 43, 44, 45, 51, 56, 63, 64, 65, 68, 69, 70, 71, 73, 74, 79, 80, 81, 83
current transformer 7, 75, 81, 85
current transformers 7, 75, 81, 85
customer billing 85

D

demand 16, 20, 59, 60, 68, 79
demand reset 79
demand reset mechanism 79
direct customer 12, 18, 27, 56, 74
direct customers 12, 18, 27, 56, 74
disconnect 70, 71, 74
dispatch 7, 13, 22, 35, 53, 54, 68, 83
document 61, 85
documents 20, 83, 85
doors 8

E

ED 29, 30, 31, 32, 33, 49, 51, 54, 59, 85
EG 8, 29, 30, 31, 32, 33, 49, 51, 54, 59
electric utility 8, 49, 65, 73
Electrodispatcherizatsia 8, 9, 31, 32, 33, 37, 49, 59
Electrogadatsema5, 8, 9, 12, 31, 32, 33, 37, 45, 47, 49, 56, 59, 61
employee 51, 79, 85
employees 51, 52, 85
EMS 20, 59
enclosure 36, 37, 39, 79, 80, 82
enclosures 8, 37, 80, 82
energy7, 15, 16, 17, 19, 20, 21, 22, 25, 27, 28, 29, 51, 54, 59, 60, 63, 64, 68, 70, 73, 74, 75, 83, 85
Energy Diversion 59, 85
Energy Management System 20, 59
environmental 36
environmentally 36
equipment rack 82
equipment racks 82

F

fault 43
fiber optic 54
Fichtner5, 7, 8, 9, 11, 13, 14, 26, 27, 28, 30, 31, 32, 33, 35, 53, 54, 55, 57, 61, 89, 90, 91, 92, 94, 95, 96, 97, 98, 99, 100, 101, 102, 103, 104, 105, 106, 107, 108, 109, 110, 111, 112, 113, 114, 117, 118, 119, 120, 121, 122, 123, 124, 125, 127, 128, 129, 130, 131, 132, 133, 134, 135
FM 54, 59
foil 11, 42, 55
fraud 21, 52, 54, 85
frequency 19, 54, 59, 68
Frequency Modulation 59

G

generator step up 25, 64, 75

PREVIOUS PAGE BLANK

Georgia7, 9, 12, 13, 14, 15, 17, 19, 24, 25, 30, 35, 36, 37, 43, 51, 52, 54, 56, 59, 61, 87
Georgia Wholesale Electricity Market7, 12, 15, 24, 25, 37, 54, 56, 59, 61, 87
Government of Georgia 9
Grid Code 8, 12, 15, 16, 49, 56, 61, 63, 81, 87
ground 17, 43, 64
ground grid 64
grounding 8
GSU 25, 59, 64, 75, 89, 117
GWEM5, 7, 8, 11, 13, 15, 16, 18, 19, 20, 21, 25, 27, 28, 29, 30, 31, 32, 33, 35, 36, 37, 39, 41, 49, 51, 53, 54, 55, 59, 63, 65, 74, 87, 142

H

Hagler Bailly5, 7, 14, 27, 28, 31, 33, 35, 41, 45, 49, 53, 57, 89, 90, 91, 92, 94, 95, 96, 97, 98, 99, 100, 101, 102, 103, 104, 105, 106, 107, 108, 109, 110, 111, 112, 113, 114, 117, 118, 119, 120, 121, 122, 123, 124, 125, 127, 128, 129, 130, 131, 132, 133, 134, 135, 136
Handbook For Electricity Metering 43
HEP59, 89, 97, 110, 111, 117, 118, 119, 120, 121, 122, 123, 125
Hydro Electric Plant5, 6, 89, 97, 110, 111, 117, 118, 119, 120, 121, 122, 123, 125

I

IEC 17, 59
images 85
instrumentation 74
International Electrotechnical Commission 59
isolating 70

J

jacket 42

K

Kevlar 37
KfW 7, 59
Kreditanstalt fur Wiederaubau 7, 9, 59
kV5, 6, 11, 12, 26, 27, 28, 29, 32, 44, 45, 47, 56, 59, 89, 90, 91, 92, 93, 94, 95, 96, 97, 98, 99, 100, 101, 102, 103, 104, 105, 106, 107, 108, 109, 110, 111, 112, 113, 114, 116, 117, 118, 119, 120, 121, 122, 123, 124, 125, 126, 127, 129, 130, 131, 132, 133, 135
kVARh 16
kW 59, 69, 73
kWh 15, 21, 22, 25, 26, 28, 59, 65, 69, 73, 75, 77

L

LDC 59, 128
lead 36, 39, 51
LFC 59
load - frequency control 54, 59, 68

M

magnetic 85
MDCS 20, 27, 42, 53, 54, 59, 74
meter7, 8, 11, 13, 14, 15, 17, 20, 21, 25, 28, 35, 36, 37, 39, 41, 42, 43, 44, 49, 51, 52, 55, 63, 64, 68, 69, 70, 73, 75, 79, 80, 81, 82, 83, 85
meter control cable 8, 41
Meter Data Collection System13, 19, 20, 53, 54, 59, 83
Meter Devices 36
meter enclosure 36, 39, 80, 82
meter enclosures 82
meter seal 7, 8, 36, 37, 39, 41, 49, 51, 79, 80, 85
meter seals 7, 8, 36, 41, 49, 51, 79, 80, 85
meter test switch 7, 8, 36
meter test switches 7, 8
meters7, 8, 11, 12, 13, 14, 15, 16, 17, 18, 19, 20, 21, 25, 26, 27, 28, 30, 31, 32, 35, 36, 41, 42, 43, 49, 55, 56, 59, 63, 69, 70, 71, 73, 74, 79, 80, 81, 83, 85, 87, 136
microwave 54
mm 11, 55, 59
model 7
modem 70
modems 70
Moscow 13
MW 59, 68
MWh 15, 59, 68

N

National Dispatch Center 20, 59, 82
NDC 20, 21, 54, 59
neutral 63, 64, 65

P

panel 70, 73
personnel 29, 30, 31, 41, 49, 63, 79, 80, 83, 85
pilot wire 54
plastic 11, 55
power8, 13, 15, 16, 17, 18, 19, 21, 25, 26, 28, 43, 53, 54, 59, 60, 63, 64, 65, 68, 69, 70, 71, 73, 74, 75, 82, 89, 90, 91, 93, 95, 96, 97, 98, 99, 100, 101, 102, 103, 104, 105, 106, 107, 108, 109, 110, 111, 112, 117, 118, 119, 120, 121, 122, 123, 124, 125, 126, 130, 131, 132, 133

R

racks 82
radio 54

Read Only 59
relay 70, 71, 82
reliability 65
remote terminal unit 54
resistance 47
revenue protection 85
ring 8, 18, 28, 29, 49, 51, 63, 73, 79, 80
RTU 20, 42, 54, 61
RTUs 20, 59

S

safety 35, 80
Satbobenergoinformatika 8, 9, 30, 31, 32, 33, 37, 49, 59, 62
SBC 7, 20, 21, 25, 28, 29, 31, 32, 51, 53, 54, 59, 73, 74, 75
SBEI 31, 33, 49, 51, 54, 59
SCADA 20, 54, 59
seal 8, 11, 37, 39, 41, 49, 55, 79, 80
seals 7, 8, 11, 36, 39, 41, 49, 51, 55, 79, 80, 83, 85
series 69
shield 11, 42, 55
sketch 25, 75
sketches 26
socket 79
standard 9, 13, 18, 41, 43, 49, 81, 82
standards 12, 49, 56, 81
station service 73, 74
steel 44, 45
storage 8
substation 20, 21, 26, 28, 29, 35, 42, 54, 64, 65, 70, 73, 74, 79, 80, 87, 89, 90, 91, 93, 95, 96, 97, 98, 99, 100, 101, 102, 103, 104, 105, 106, 107, 108, 109, 110, 111, 112, 117, 118, 119, 120, 121, 122, 123, 124, 125, 126, 130, 131, 132, 133
substations 7, 8, 11, 12, 14, 21, 26, 30, 32, 49, 55, 56, 82, 87
Supervisory Control and Data Acquisition 13, 19, 20, 59

T

Tbilisi 59, 61, 62
telemetry 11, 13, 14, 55, 82
telephone 14, 53, 54
TEP 59, 92
terminal 54, 70, 79, 82
terminal block 70, 79, 82
terminal blocks 79, 82
test switch 7, 8, 11, 35, 36, 55, 63, 69, 70, 71, 80, 85
Theft of Energy 59, 85
theft of service 85
Theft of Service 59, 85
Thermal Electric Plant 5, 92
TOE 59, 85
TOS 59, 85
toxic 11, 36, 39, 55

U

U. S. Agency for International Development 7, 59
Unauthorized Use of Energy 59, 85
ungrounded 65, 66
USAID 59
UUE 59, 85

V

VAR 16, 60
VARh 16, 60
voltage 7, 11, 16, 17, 26, 28, 32, 44, 55, 59, 64, 65, 68, 69, 70, 82, 85
voltage transformer 7, 65, 85
voltage transformers 7, 65, 85
VT 8, 12, 35, 41, 42, 43, 44, 45, 56, 60, 69, 70, 79, 80, 81, 82
VTs 5, 8, 11, 12, 17, 18, 20, 28, 35, 36, 39, 41, 42, 43, 44, 45, 51, 56, 63, 64, 65, 68, 69, 70, 71, 73, 74, 79, 81, 83

W

WB 7, 11, 55, 60
World Bank 7, 9, 60

Quick Table Of Contents

Costs (Table) ..... Page 55

Executive Summary (Text) ..... Page 7

Executive Summary Of Possible Projects (Table) ..... Pages 11 and 53

Glossary Of Abbreviations Used In This Report ..... Page 57

Meters In GWEM Listed By Plant and Substation ..... Pages 85 to 131

Number Of Meters Needed, Several Estimates (Table) ..... Page 33

Suggested Design Of Metering At a Generating Plant (Figure) ..... Page 73

Suggested Design Of Metering At an Interconnection Point (Figure) ..... Page 69

Suggested Design Of Metering For Three and Four Wire Circuits (Figure) ..... Page 64

PREVIOUS PAGE BLANK