PN-ACJ-047
105419

MANAGEMENT REPORT

November 1999 – April 2000

Submitted to the American Agency of International Development;
Bureau for Global Programs; Field Support and Research;
Center for Economical Growth

ECOLOGICAL CLEAN PROCESS OF CRUDE COPPER PRODUCTION

PI: Prof. D.G. Brandon, Ph.D.
Technion – Israel Institute of Technology

Collaborator: Prof. S.M. Kozhakhmetov, D.Sci.
Institute of Metallurgy and Ore Benefication (Kazakhstan)

Technion R&D Project : # 040-655
Grant number: TA-MOU-98-CA17-017

Project officer: William Crane, ES&T Counselor American Embassy, Tel-Aviv, Israel

TECHNION – Israel Institute of Technology
(Israel)

Institute of Metallurgy and Ore Benefication (IMiO)
Ministry of education and science
(Kazakhstan)

SHORT REPORT
by cooperative Grant of USAID № TA-MOU-98-CA17-017

"ECOLOGICAL CLEAN PROCESS OF CRUDE COPPER PRODUCTION"

for the first half-year of the first year (November 1999 – April 2000)

TECHNION

Manager Projects Promotion & Research Development Administration
F. Nuggar

Manager of the project,
Professor
D.G. Brandon

Responsible executors:

Professor
S.E. Vaisburd

Professor
A. Berner

IMiO

Director of IMiO
Doctor of technical sciences
B.K. Kenzhaliev

Manager of the project,
Academician of NAN RK
S.M. Kozhakhmetov

Responsible executors:

Professor
A.N. Kvyatkovski

Doctor of technical sciences
R.Z. Zhalelev

Candidate of technical sciences
S.A. Kvyatkovski

Candidate of technical sciences
N.S. Grishankina

Post-graduate
E.B. Kenzhaliev

Haifa – Almaty
2000

1. Introduction.

Studies of the physico-chemical basis for and creation of a continuous technology of crude copper production suggest integration of the autogenous melting of copper sulfide burden and conversion of copper matte in a single metallurgical aggregate. The discontinuous process of matte conversion is thus eliminated, while the output of a stream of sulphureous gas for the production of sulphuric acid is introduced. The counter flow of matte (copper) and slag melts delivers the slags into an electric furnace with a coke filter for deep stripping.

In addition to considerable technological, energetic and economic advantages, such a continuous process of crude copper production should also guarantee development of an ecologically safe technology, in which the poisonous gaseous and solid wastes of a conventional copper-smelting plant are drastically reduced.

The present project is aimed at promoting the implementation of this concept, but the suggested continuous technology for crude copper production is rests on the results of our studies over many years, including development and implementation under industrial conditions of the basic technology. For example, the Balkhash copper-smelting plant (Kazakhstan), and the Norilsk and Sredneuralsk copper plants (Russia) have more than 10 years of industrial experience of such a process for smelting copper sulfide and copper-zinc concentrates in a liquid bath of matte-slag melts and aggregates (A.V. Vanyukov [1, 2]).

Aggregates and a process for electro-thermal demetallizing of liquid copper-zinc and lead slags by the deep reduction of slag melts with a coke filter has also been tested on a semi-industrial scale [3].

While the separate elements of a continuous technology have been tested within the experimental and industrial complex in Kazakhstan, successful realization of the complete process of the direct production of copper will only be possible when the overall continuity of the whole technology can be guaranteed. This includes:

1) Oxidation of a sulfide burden to crude copper and
2) Reduction of copper rich, peroxidized slags
3) Isolation of the copper-ferrous phase to obtain liquid silicate melts (for use as building materials).

The problem of conformity, or physical-chemical synchronization of the smelting and stripping of aggregates depends on the rates of three basic processes:

- Melting and oxidation of the copper sulfide burden to crude white matte and copper;
- Separation of slag and matte-copper melts in the liquid bath of the smelted

- Deep reduction of the liquid slag melts.

The main task for the experimental part of the present contract is to study the kinetics and thermodynamics of matte melt oxidation, the reduction of oxide systems and slag melts, and the equilibrium distribution of copper and other metals in the experimental system *copper (matte) – slag – gaseous phase.*

The research team for this contract, both from the Institute of Metallurgy and Ore Benefication and from the Technion, have published major scientific works in the area of interest[4-6] nevertheless, the novelty of the problem set by this contract is that the studies of oxidative-reductive processes are to be applied to sulfide-oxide systems and matte and slag melts, characteristic of a continuous, autogenous technology of crude copper production.

2. Oxidation of the binary system FeS-Cu_2S in copper matte melts.

2.1. A horizontal experimental unit with a tangential gas stream passing over the melt surface to exclude the outer diffusion resistance and expose the kinetic stage of the gas-melt reaction was first suggested and realized in [7]. This experimental unit was used for the study of iron oxidation from Fe (II) to Fe (III) in slag melts. The unit was subsequently expanded to include a SO_2 gas analyzer to study the oxidation of sulfide melts. A similar unit was constructed in the Institute of Metallurgy and Ore Benefication, Almaty and used in the present investigation for the study of oxidation of iron-copper sulfide melts. A schematic of this gravimetric laboratory apparatus is shown in fig. 1.

2.2. Synthetic compositions of mattes, given in the table 1 (mattes 1, 2, 3) were prepared for the present experiments. The industrial matte sample composition used in Vanyukov's furnace was taken from BGMK (table 1, matte 4).

2.3. The compositions resulting from Vanyukov's experiments were taken for the study at the Institute of Metallurgy and Ore Benefication (Kazakhstan) and at theTechnion (Israel) and analyzed (table 2).

2.4. Preliminary experiments to define the influence of temperature on the rate of oxidation of synthetic mattes have been made (fig. 2).

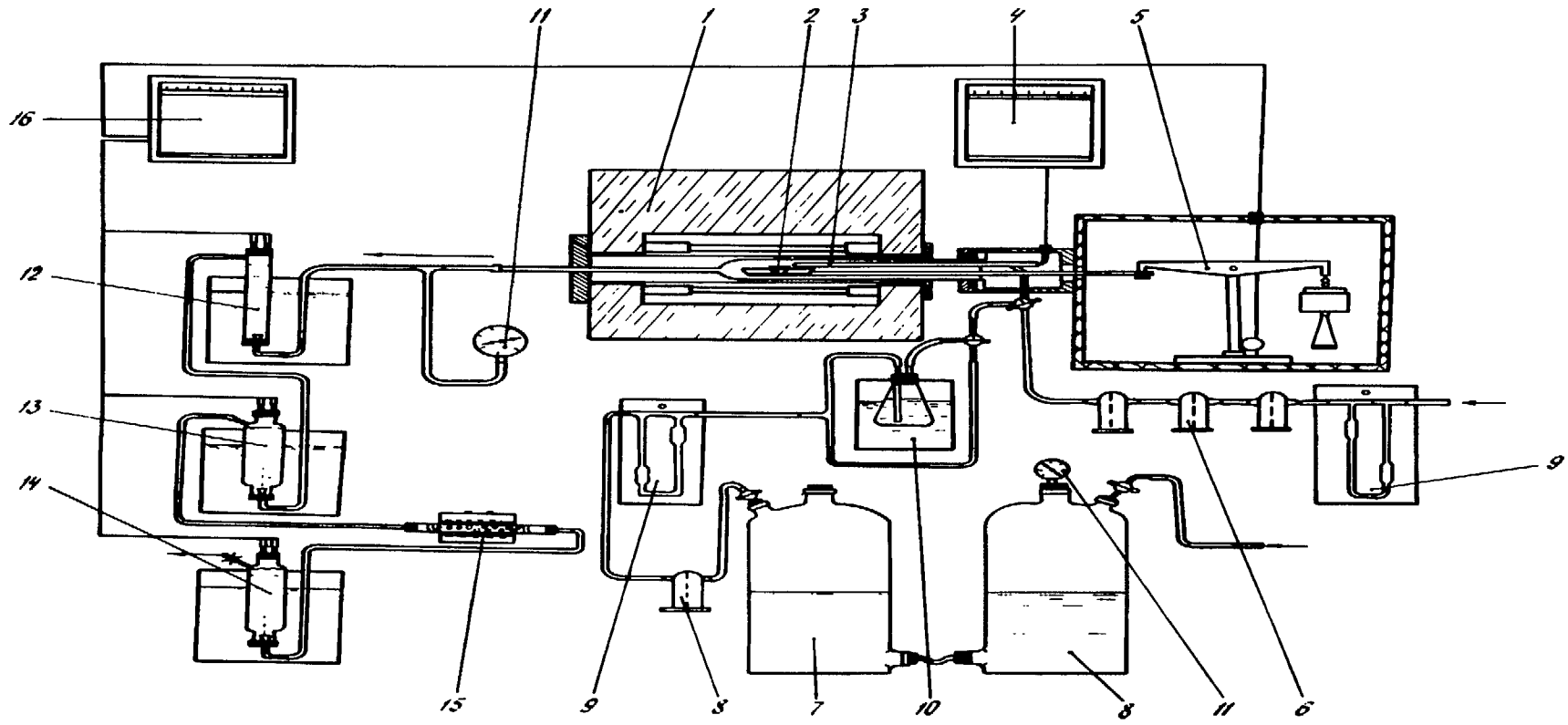

Fig. 1.

Scheme of the horizontal thermogravimetric laboratory equipment with continuous flow of a gaseous phase. 1. Furnace; 2. Crucible with specimen; 3. Tuyere; 4, 16. KSP-4; 5. Balance; 6. Drying system; 7. Gas meter; 8. Reservoir; 9. Rheometer; 10. Thermostat; 11. Manometer; 12, 13, 14. Analytical cells; 15. Furnace for heating of I_2O_5..

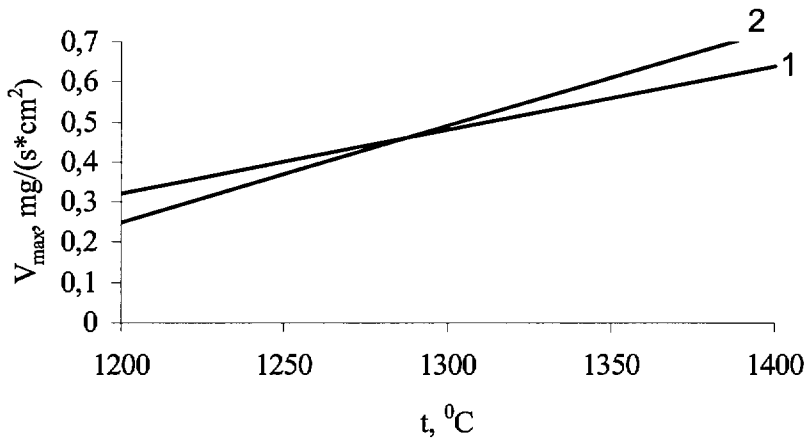

Fig.2.
Variation of maximum rate of matte oxidation with temperature.
1 – matte 1 (table 1); 2 – matte 2 (table 1).

Table 1.

Chemical composition of synthetic mattes used for experiments.

№№	ratio $Cu_2S \cdot FeS/Cu_2S$		Cu	Fe	S	FeS
	by weight %	by mol %	weight %	weight %	weight %	weight %
1.	0,2	0,129	73,33	5,30	21,36	6,02
2.	0,6	0,387	65,0	11,93	23,07	13,56
3.	1,0	0,645	60,0	15,91	24,09	18,08
4.			46-48	22-23		

Table 2.

Chemical analysis of melt products from Vanyukov's furnace.

Melt # the sample	Cu	Fe/FeO	S	CaO	SiO_2	Fe_3O_4	Al_2O_3	Zn	Pb	Σ
1235 slag from over current	3,80	30,90	1,80	2,50	31,70	2,40	5,40	6,50	1,26	94,98
1239 slag	0,31	32,40	1,90	2,90	33,80	3,20	5,10	6,3	1,20	95,05
1233 matte	48,9	16,48	22,12	0,12	1,3		1,35	3,60	2,50	96,38

Additions of metallic copper and iron (5 and 10% of the weight of the initial matte) were used to create metallized mattes.

3. Influence of copper and iron content on kinetic parameters and on the mechanism of liquid slag reduction by solid carbon.

3.1. Thermogravimetric equipment (*Setaram,* fig. 3) and an installation for the contactless reduction of oxides (fig. 4) were modernized and prepared for this work.

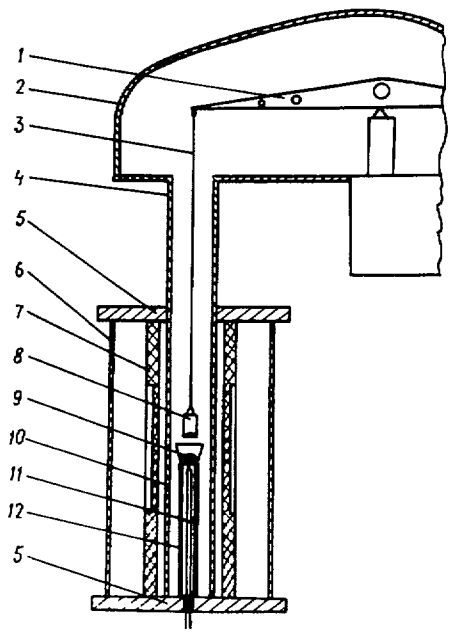

Fig. 3.
Thermogravimetric unit *Setaram.*
1 – balance; 2 – sealed housing; 3 – suspension arm; 4 – sealed tube;
5 – furnace cover; 6 – housing; 7 – coal heater; 8 – slag sample;
9 – sample of reducing agent; 10 – *alundum* tube; 11 – thermocouple;
12 – quartz support

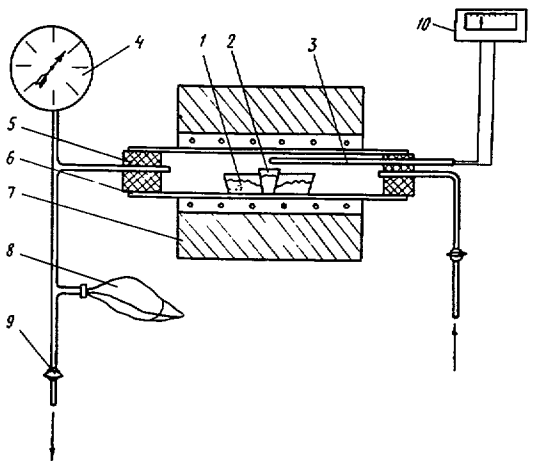

Fig. 4.
Installation for contactless reduction of oxides.
1 – reducing agent; 2 – slag sample; 3 – thermocouple; 4 – manometer;
5 – rubber lock; 6 – refractory tube; 7 – electrical furnace;
8 – expanding chamber; 9 – valve.

3.2. Slags for reduction experiments were also prepared (table 3).

Table 3.

Composition of slags used in experiments

	Content, weight %						
	Cu	Zn	Pb	Fe	SiO_2	Al_2O_3	CaO
1. Converter slag	5,8	5,5	10,0	25,0	29,2	4,8	2,1
2. Synthetic iron-free slag	-	13,4	-	-	42,4	9,5	23,5
3. High zinc content slag	0,5	14,5	1,7	19,5	20,0	3,0	22,0

3.3. Preliminary experiments were made on reduction by titanium shavings and coal-activated converter slag (table 3) at a temperature of 1300 ^{0}C and up to 3 hours exposure.

3.4. Preliminary experiments on the reduction of a synthetic slag and a slag with increased zinc content (table 3) were also made at the temperatures of 1000 and 1250^{0}C with titanium shavings and activated coal. The results of these experiments are shown in fig. 5 and 6.

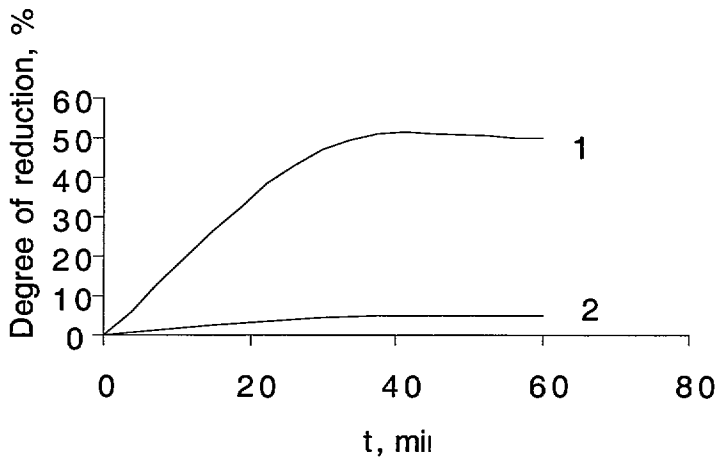

Fig. 5.
Slag reduction with a high zinc content (1) and an iron-free slag (2) at 1000^{0}C.

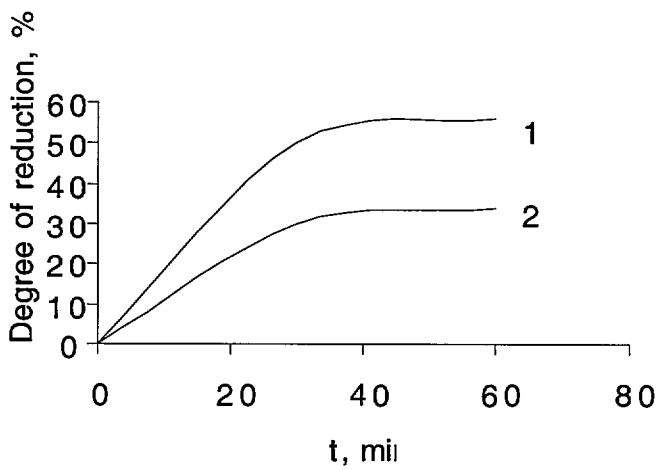

Fig. 6.
Slag reduction with a high zinc content (1) and an iron-free slag (2) at 1250^{0}C.

4. Physico-chemical properties of copper production slags and mattes. Viscosity.

4.1. Viscosity measurements on oxide melts were made using the high temperature experimental unit developed at the Technion [8]. The unit was calibrated by means of the triple eutectic (p.5) in the system $CaO–Al_2O_3–SiO_2$ [9] as reported in [10]. The calibration results, together with the data of previous calibrations are presented in fig. 7.

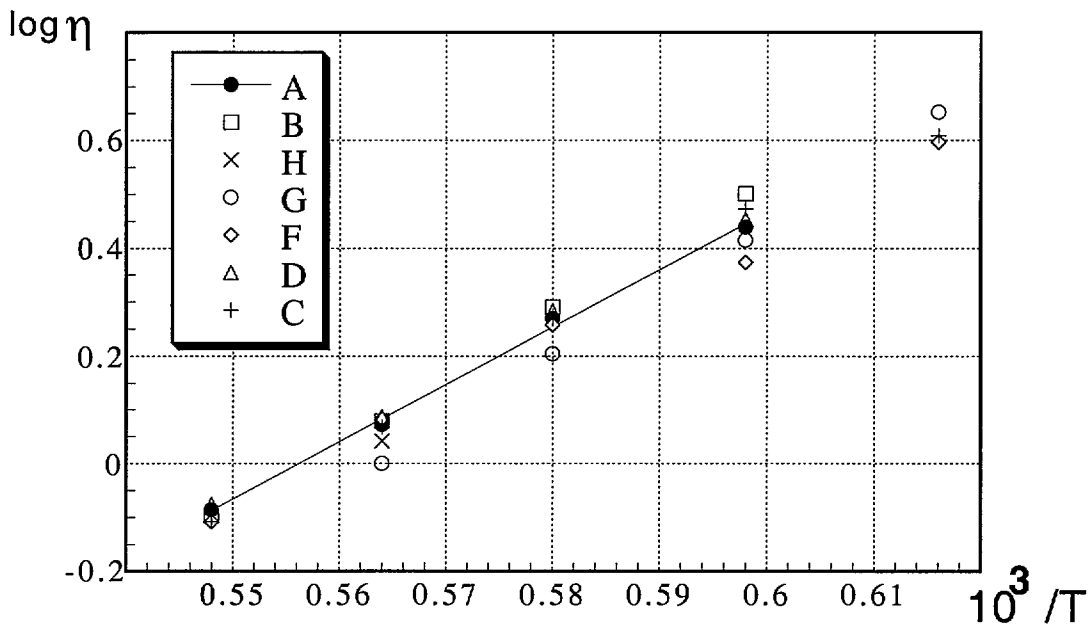

Fig. 7.
Calibration of the high temperature viscometer.
A – present measurements, year 2000;
Previous measurements:
B – year 1994; C – year 1996; D – year 1998; F – year 1999;
G and H – reference data [11,12].

The excellent agreement confirms the reliability of all viscosity measurements made with this experimental unit [8].

4.2. The viscosity of the industrial slag (table 2) was found to vary from 0.12 to 0.24 Pa.s in the temperature interval 1400 to 1550 ^{0}C. This low viscosity value is associated with the high concentration of iron oxides in the silicate melt.

5. Scanning electron microscopy (SEM) and Electron probe x-ray microanalysis (EPMA)

5.1. In order to study phase and elemental analysis of samples SEM and EPMA were performed. SEM/EPMA was conducted on the XL30 (Philips, Holland) scanning electron microscope equipped with LINK ISIS (Oxford Instruments, England) energy dispersive spectrometer (EDS) and Microspec (Oxford Instruments, England) wavelength dispersive spectrometer (WDS). EDS measurements were carried out using the accelerating voltage of 20 kV, the probe current of 1 nA at the working distance of 10 mm. Take off angle of x-ray radiation was 35°. Acquisition time was 100 s per single measurement. For all cases the standard deviation of the measured intensity for a single measurement did not exceed 5 % relative. Quantitative analysis was performed using conventional correction procedure included in LINK ISIS software. Final results were normalized to 100 %

5.2. Typical SEM image of the matte sample surface is presented in fig.8. Composition of the matte is given in the table 2. One can see that fig.8 exhibits a complicated contrast, which indicates that the sample is composed of several phases. The major phases were identified.

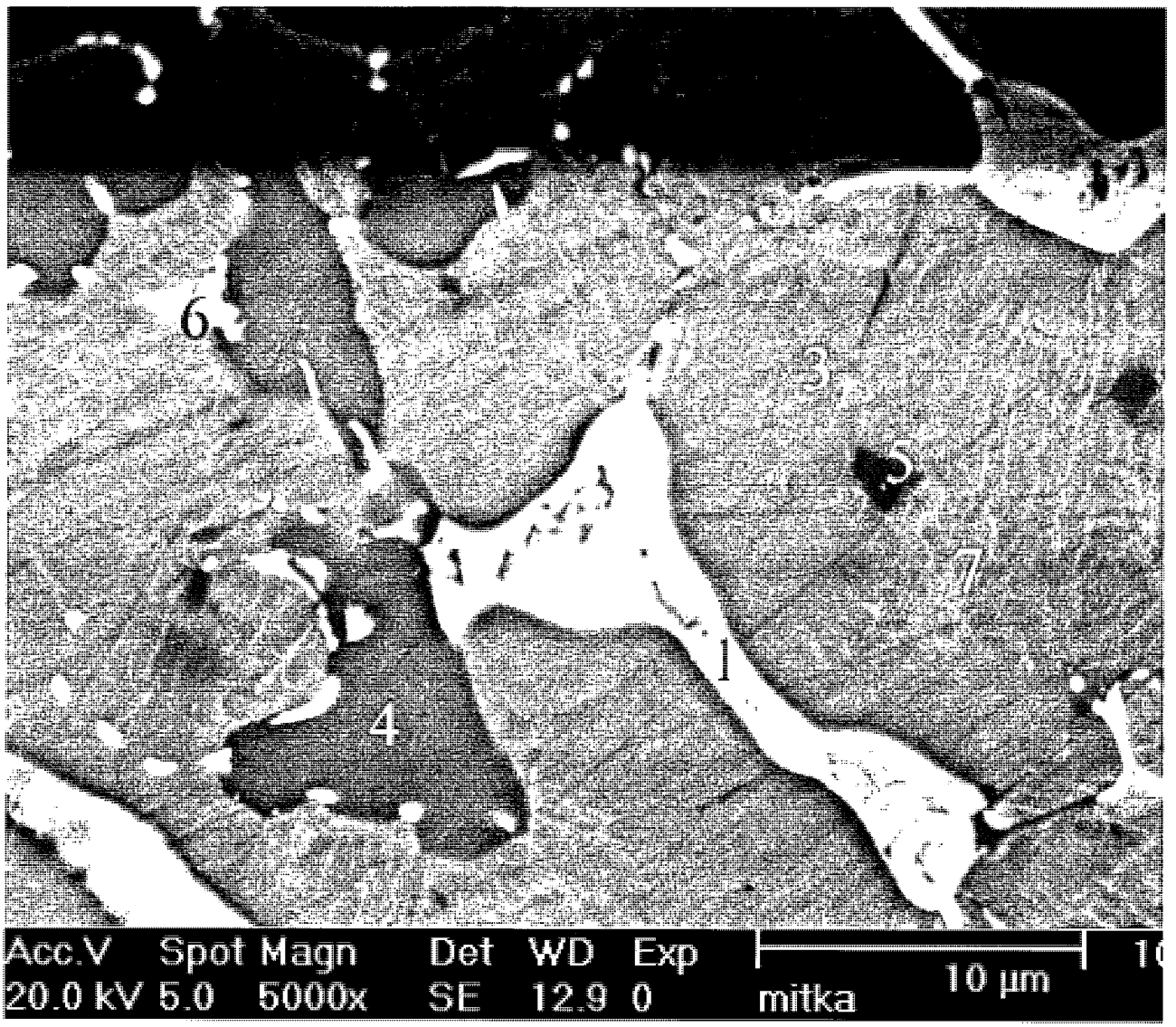

Fig. 8.
SAM image of the matte sample.
The major phases are identified as:

a) copper sulfide base phase (points 3, 7); b) zinc sulfide base phase (p.4); c) metal (Cu or PbZn) inclusions (p.1, 2, 6) and d) oxide phase (p.5).

6. Cooperation & Exchange Visits.

6.1. An Israeli member of the Project Team, Professor D.Sci. S. Vaisburd, visited the Institute of Metallurgy and Ore Benefication (Almaty, Kazakhstan) from 24 November to 1 December 1999 to coordinate the work program and discuss the experimental methods.

6.2. The Kazakh manager of the Project, Professor D.Sci. S.M. Kozhakhmetov, visited the Technion (Haifa, Israel) from 5 to 12 April 2000 to discuss the preliminary results of the first half-year of this project and the program for the second half-year.

6.3. A doctoral student of the Institute of Metallurgy and Ore Benefication (Kazakhstan), E.B. Kenzhaliev is presently working at the Technion (Israel), with Dr. Vaisburd and Dr. Brenner, from February 5, 2000 for a period of 5 months.

7. Summary.

The work coordinated under Grant TA-MOU-98-CA17-017 for the first half-year (November 1999 – April 2000) has been completed in accordance with the original program. Slags and mattes for the investigation have been prepared by the Almaty team, laboratory equipment in Almaty and Haifa has been tested, and the preliminary experiments planned for the Technion team have been completed.

Bibliography.

1. Khagadzheev D.T., Kozhakhmetov S.M., Zhalelev R.Z. a. o. Mastering and implementation of the process of melting in Vanyukov's furnace on the enterprise "Balkhasnmed". – Summaries of the reports of the enterprise "Balkhashmed", 1991, pp. 1-4.

2. Radzhibaev M.Yu., Kozhakhmetov S.M., Zhalelev R.Z. a.o. Constructive pecularities of Vanyukov's furnace on the enterprise "Balkhashmed". – Summaries of the reports of "Balkhashmed", 1991, pp. 4-6.

3. Kvyatkovski A.N., Kozhakhmetov S.M.and Kvytkovski S.A. Electrical furnace with coke planned filter for the processing of slags of copper and lead industry. //Complex utilization of mineral stuff, 1998, 4, pp. 55-59.

4. Kozhakhmetov S.M. a.o. Influence of magnetite, silica and metallic copper onto the copper and iron sulphides oxidation rate. – VINITI, 5665.81.

5. Kozhakhmetov S.M., Grishankina N.S., Zhalelev R.Z. a.o. Role of carbon during oxidation of matte-slag emulsion in conditions of Vanyukov's furnace. – VINITI, 2175, 24.04.90.

6. Vaisburd S.E. Physico-chemical properties and specific features of the structure of sulfide melts. // Moscow, Metallurgy, 1996.

7. Popov M.I.and Vaisburd S.E. - High-temperature experimental unit for study of the kinetics of interaction between gas and melt. – Trans. Inst. Gipronickel, 1970, No.46, pp. 142-148.

8. Vaisburd S.and Brandon D.G. - A combined unit for viscosity, surface tension and density measurements in oxide melts. - Meas. Sci. Technol., 1997,.8, pp. 822-826.

9. R.S.Roth, J.R.Dennis, H.F.McMurdie. Phase diagrams for ceramists. The Amer. Ceramic Society. 1981, vol.4; 1987, vol.6.

10. Vaisburd S.,.Pertsicov I. and Brandon D.G. - Coal-ash melt viscosity measurements for assessment of deposit location in power boilers. - VGB PowerTech, 1998, **78**, No 8, pp.60-63.

11. J.F.Elliott, M.Gleiser and V.Ramakrishna. - Thermochemistry for Steelmaking. Reading, Massachusetts – London, 1963.

12. Slag Atlas. - Verlag Stahleisen GmbH, D-Dusseldorf, 1995.