United States
Environmental Protection
Agency

Office of International Activities
Mail Code 2760R

160 B 99 001
http //www epa gov/oia/itc htm

PN ACG-419

Implementer's Guide To Phasing Out Lead In Gasoline

Implementer's Guide to Phasing Out Lead in Gasoline

Submitted by

Environmental Pollution Prevention Project
Hagler Bailly Services, Inc
1530 Wilson Boulevard, Suite 400
Alexandria, VA 22209-2406, USA

Christopher S Weaver, PE
Engine, Fuel, and Emissions Engineering, Inc
9812 Old Winery Place, Suite 22
Sacramento, CA 95827 USA
(916) 368-4770

B

Disclaimer

This document was supported in part by the U S Environmental Protection Agency under grant number CX-817119-01 Mention of trade names, products, or services does not convey, and should not be interpreted as conveying, official EPA approval, endorsement, or recommendation

Acknowledgements

The *Implementer's Guide to Phasing Out Lead in Gasoline* was prepared by Engine, Fuel and Emissions Engineering, Inc in association with Hagler Bailly Services, Inc This document represents a collaborative effort between the United States Agency for International Development (USAID) and the United States Environmental Protection Agency (USEPA) The authors wish to thank Mr David Hales, Deputy Assistant Administrator, Global Environment Center, USAID, and Mr William Nitze, Deputy Assistant Administrator, Office of International Activities, USEPA, for their leadership in reducing the threat of lead in the environment In addition, the authors gratefully acknowledge the extensive review, comments and guidance provided by Sylvia Correa, David Kortum and John Holly of USEPA and by John Borrazzo, Regina Ostergaard-Klem and Robert MacLeod from USAID

Foreword

Lead in the environment is an important hazard to human health Epidemiological and clinical studies conducted over the last two decades have demonstrated significant links between lead concentrations in the body and a variety of ills These include impaired mental development, reduced intelligence, and behavioral disorders in children, and high blood pressure, cardiovascular disease, and cancer in adults These effects have been found at levels of lead exposure that were previously considered safe

Human exposure to environmental lead occurs through many pathways, including exposure to lead-based paints, lead dissolved in water from lead pipes, brass fittings, and solder joints, and lead in food from improperly glazed pottery and soldered cans However, the single most important source of human exposure to lead is lead aerosol formed by the combustion of lead antiknock additives in gasoline The elimination of these additives is the most important single step toward reducing lead exposure and the resulting damage to public health

Because of progress in refining technology, lead additives are no longer required to achieve gasoline octane specifications The United States has successfully eliminated lead from its own gasoline, and the U S Government supports phasing out the use of lead in gasoline worldwide Among the most important obstacles to promptly phasing out lead in gasoline in many countries is the uncertainty felt by many policy makers regarding the technical alternatives to lead, the costs and benefits of reducing or eliminating lead use, and the potential impacts on the refining sector and on the vehicle fleet In many cases, political decisions to eliminate lead have already been taken, but the implementation of these decisions is impeded by uncertainty as to how best to carry them out

This Guide is intended to support the worldwide phaseout of lead in gasoline by providing a checklist and guidance for government officials tasked with developing and implementing a lead phaseout policy, and by assembling the data and resources these officials need to carry out their task

E

Acronyms

ASTM	American Society for Testing and Materials
BTX	benzene-toluene-xylene
CH_4	methane
CO	carbon monoxide
DIPE	di-isopropyl ether
EPA	United States Environmental Protection Agency
ETBE	ethyl tertiary butyl ether
FCC	fluid catalytic cracker
g	gram
GC-OFID	gas chromatography, using an oxygenate flame ionization detector
HC	hydrocarbon
HCl	hydrochloric acid
Hg	mercury
HNO3	nitric acid
H_2S	hydrogen sulfide
IQ	intelligence quotient
km	kilometer
kPa	kilopascals
l	liter
LPG	liquefied petroleum gas
MIBK	methyl isobutyl ketone
µg	microgram
MMT	methylcyclopentadienyl manganese tricarbonyl
Mn	manganese
MON	motor octane number
MTBE	methyl tertiary-butyl ether
NGO	non-government organization
NMHC	non-methane hydrocarbon
NO_x	oxides of nitrogen
Pb	lead
PM2 5	fine particulate matter
PONA	paraffin, olefin, naphthene, and aromatic
ppb	parts per billion
ppm	parts per million
PSI	pounds per square inch

F

RON	research octane number
RVP	Reid vapor pressure
SO_2	sulfur dioxide
TAME	tertiary amyl methyl ether
TEL	tetraethyl lead
UNECE	United Nations Economic Commission for Europe
U S EPA	United States Environmental Protection Agency
VOC	volatile organic compound
VOSL	value of a statistical life saved
WTP	willingness to pay

IMPLEMENTER'S GUIDE TO PHASING OUT LEAD IN GASOLINE

March 1999

Submitted by
Environmental Pollution Prevention Project
Hagler Bailly Services, Inc

USAID

EPA

Contents

Chapter 1 Overview 1

1 1 Why Phase Out Lead In Gasoline? 1

1 2 Myths And Misconceptions About Lead Phaseout 2

1 3 How To Use This Guide 2

1 4 Summary Of Issues And Actions To Consider In Phasing Out Lead In Gasoline 3
- 1 4 1 Identifying Technical Options For Reducing Or Eliminating Lead Additives 5
- 1 4 2 Assessing Lead Phaseout Impacts On The Vehicle Fleet 6
- 1 4 3 Assessing Lead Phaseout Effects On Vehicle Emissions And Air Quality 6
- 1 4 4 Assessing The Health Benefits Of Lead Phaseout 7
- 1 4 5 Conducting A Cost-Benefit Analysis 7
- 1 4 6 Choosing Policy Instruments 8
- 1 4 7 Monitoring Compliance 8
- 1 4 8 Conducting Followup Evaluation And Reporting 9
- 1 4 9 Conducting Public Education 9
- 1 4 10 Ensuring Public Consultation And Involvement 10

1 5 Examples Of Successful Lead Phaseout 10
- 1 5 1 United States 10
- 1 5 2 Mexico City 11

Chapter 2 Identifying Technical Options For Reducing Or Eliminating Lead Additives 15

2 1 Knock And Octane Rating 17

2 2 Hydrocarbon Classifications And Octane Values 18

2 3 Properties Of Tetraethyl Lead 20

2 4 Petroleum Refining And Gasoline Supply 21
- 2 4 1 Different Refinery Types And Capabilities 21
- 2 4 2 Principal Process Streams Used In Gasoline 24
- 2 4 3 Examples Of Refinery Upgrades To Produce Unleaded Gasoline 25

2 5 Oxygenates As Gasoline Blending Components 28
- 2 5 1 Sources, Supply Volumes, And Prices 29
- 2 5 2 Impact On Vehicles 30
- 2 5 3 Impact On Pollutant Emissions 30
- 2 5 4 Impact On Soil, Groundwater, And Surface Waters 32
- 2 5 5 Health Risks Associated with MTBE 33

2 6 MMT Properties And Performance 33

2 7 Lead Phaseout Strategies 34

Chapter 3 Assessing Lead Phaseout Impacts On The Vehicle Fleet 39

3 1 Lead's Role In The Engine 40
3 1 1 Valve Seat Recession 40
3 1 2 Valve Corrosion And Guttering 42
3 1 3 Oil Changes And Engine Life 42
3 1 4 Spark Plug Fouling And Replacement Frequency 42
3 1 5 Exhaust System Corrosion 43

3 2 U S Fleet Experience 43

3 3 Worldwide In-Use Experience 44

3 4 Monetizing Maintenance Costs And Savings 44

Chapter 4 Assessing Lead Phaseout Effects On Vehicle Emissions And Air Quality 47

4 1 Emission Control Technologies For Gasoline Vehicles 47

4 2 Systems Of Emission Standards 49

4 3 Effect Of Leaded Vs Unleaded Gasoline 50

4 4 Effect Of Gasoline Properties And Composition Of Emissions 51
4 4 1 Sulfur 52
4 4 2 Volatility 52
4 4 3 Olefins 53
4 4 4 Aromatics And Benzene 54

Chapter 5 Assessing The Health Benefits Of Lead Phaseout 55

5 1 Emissions Vs Ambient Concentrations 57

5 2 Ambient Concentrations Vs Blood Lead Concentration 58

5 3 Estimating The Reduction In Blood Lead Due To Lead Phaseout 59

5 4 Assessing The Health Benefits Of Lead Phaseout 61
5 4 1 Lead And Neurodevelopmental Effects In Children 61
5 4 2 Lead And Blood Pressure In Adults 63
5 4 3 Lead And Cancer 64

J

5 5 Economic Value Of Reducing Adverse Health Impacts 67

Chapter 6 Conducting A Cost-Benefit Analysis 69

6 1 Cost-Benefit Analysis And Strategy Selection 69

6 2 Cost Benefit Comparison Of Alternative Strategies 70

6 3 Potential Lead Phaseout Strategies 72

6 4 Example Of Cost-Benefit Comparison 72

Chapter 7 Choosing Policy Instruments 77

7 1 Command-And-Control Instruments 79

7 2 Market-Based Instruments 81

7 3 Lessons From The U S Experience 82

Chapter 8 Monitoring Compliance 85

8 1 Gasoline Sampling 86
8 1 1 Sampling Precautions 86
8 1 2 Sampling Terms 86

8 2 Measuring Lead In Gasoline 88
8 2 1 Standard Method Test By Atomic Absorption Spectrometry 88
8 2 2 Automated Method Test By Atomic Absorption Spectrometry 88
8 2 3 X-Ray Spectrometry 88

8 3 Octane Measurements 89

8 4 Gasoline Composition 89
8 4 1 Sulfur 90
8 4 2 Olefins 90
8 4 3 Reid Vapor Pressure 90
8 4 4 Distillation 90
8 4 5 Benzene 90
8 4 6 Aromatics 90
8 4 7 Oxygen And Oxygenate Content Analysis 91

8 5 Laboratory Equipment And Costs 92

K

Chapter 9 Conducting Follow-Up Evaluation and Reporting 93

9 1 Measuring Lead Concentrations In Blood 93

9 2 Measuring Lead In Ambient Air 94

Chapter 10 Conducting Public Education 95

10 1 Defining The Goals Of The Public Education Strategy 96

10 2 Developing A Public Education Strategy 97

10 3 Media And Other Techniques For Public Communication 99

10 4 Assigning Responsibility For Public Education 101

10 5 Tracking Progress And Measuring Effectiveness 101

10 6 The Timing Of Public Education Activities 102

Chapter 11 Involving Key Stakeholders In The Development Of A Lead Phaseout Strategy 103

11 1 Stakeholder Identification 103

11 2 Stakeholder Involvement Strategies 105

Chapter 12 Bibliography 109

L

List of Tables

1 World Specifications For Gasoline Octane Rating And Lead Content 18
2 Blending Octane Values Of Some Typical Hydrocarbons And Gasoline Components 19
3 Typical Octane Values For Some Process Streams Used In Gasoline Blending 24
4 Typical Feed And Product Composition For A Catalytic Reformer 25
5 Example Of Meeting Octane Requirements With Reduced Use of Lead 37
6 Costs of Phasing Out Lead in Gasoline – Hypothetical Case 38
7 Hypothetical Maintenance Cost Savings With Low Lead And Unleaded Gasoline 46
8 Comparison Of Pollutant Emissions Using Leaded Low Lead And Unleaded Gasoline In Vehicles Without Catalytic Converters 51
9 Toxic Air Contaminant Emissions Using Leaded And Unleaded Gasoline 51
10 Lead Emissions Vs Ambient Concentration For A Selection Of World Megacities 57
11 Reduction In Blood Lead Concentrations Due To Reducing Lead In Gasoline A Hypothetical Example 60
12 Calculating The Reduction In Mortality Due To A Hypothetical Reduction In Blood Lead Concentration 64
13 Carcinogenic Compounds Associated With Gasoline Combustion 65
14 Example Of Change In Cancer Risk Due To Lead Phaseout 66
15 Estimated Benefits Of Reducing Blood Lead Concentrations In The United States By 1 0 µg/dl 68
16 Effect Of Lead Phaseout Strategies On Blood Lead Concentrations Hypothetical Case 73
17 Effect Of Changes In Adult Blood Lead Concentrations On Mortality Hypothetical Case 74
18 Calculation Of Population Wide Health Benefits Hypothetical Case 74
19 Cost Benefit Comparison Of Lead Phaseout Strategies Hypothetical Case 75
20 Summary Of Gasoline Sampling Procedures And Applicability 86
21 Prices For Analytical Equipment 92

List of Figures

1 Lead Emissions And Average Blood Level Content In The United States 1970 1995 11
2 Use Of Lead In Gasoline In The Valley Of Mexico 1988 1998 12
3 Airborne Lead Concentrations In The Valley Of Mexico 1988 1998 13
4 Average Blood Lead Content in Mexico City 1977 1997 13
5 Octane Enhancement Vs Lead Concentration For Some Typical Gasolines 20
6 Distillation Of Crude Oil 22
7 Simplified Process Diagram For A Hydroskimming Refinery 22
8 Process Diagram Of A Deep Conversion Refinery 23
9 Evolution Of The Slovnaft Refinery Slovak Republic 26
10 Expected Change In Average Blood Concentration Due To A Change In Lead Concentration In Ambient Air 59
11 Blood Lead Concentration In Children Vs Quarterly Sales Of Lead In Gasoline Chicago USA 60
12 Blood Lead Concentration In Children Vs Quarterly Sales Of Lead In Gasoline New York USA 61
13 Effect Of Changing Average Blood Lead Level On Percentage Of Learning Disabled And Gifted Children 63

1. OVERVIEW

This Guide is written for officials who are responsible for implementing the phaseout of lead additives in gasoline It assumes that their governments have already made the decision to eliminate the use of lead additives, but have not yet determined how and when to accomplish this

The activities described in this Guide are not necessarily sequential, they may be best applied simultaneously so that the output of each step is evaluated as a whole, and not solely as an input to the next step along a critical path For example, although involving key stakeholders is presented as the last activity in the development of a lead phaseout strategy, it should not be conducted separately at the end of the process In fact, stakeholders need to be involved at the outset if the phaseout plan is to be successful

> This chapter provides a summary and checklist of the issues and actions to consider in developing and implementing a lead phaseout policy It also gives two examples of successful lead phaseout programs

1 1 Why Phase Out Lead In Gasoline?

Using lead additives to increase the octane rating of gasoline enabled the development of modern high-compression gasoline engines But these additives have also produced dangerously high levels of lead aerosol (fine particles suspended in air) pollution in cities worldwide Lead is a dangerous air pollutant, contributing to high blood pressure, cancer and heart disease in adults, and to reduced intelligence, behavioral disorders and impaired development in children Health risk assessments in cities around the world where leaded gasoline is common have shown that lead aerosol is one of the most important causes of health damage due to air pollution Lead in gasoline also increases vehicle maintenance costs and reduces the life of automobile engines

With modern refining technology, lead additives are no longer needed to meet gasoline octane specifications High gasoline octane ratings can be achieved without lead, at an incremental cost to the refiner of about US $0 005 to $0 02 per liter These costs are less than the resulting savings in vehicle maintenance costs, and far less than the health benefits of reducing lead pollution Thus, there is a clear economic case for phasing out lead additives as quickly as possible, and a strong movement toward doing so worldwide

1 2 Myths And Misconceptions About Lead Phaseout

Efforts to phase out lead in gasoline have been impeded by a number of myths and misconceptions that have concerned both government officials and the public In some cases, these myths have been fostered or promoted by organizations with vested interests in continuing leaded gasoline sales Three very common misconceptions are

Myth 1 Older engines require leaded gasoline, and will suffer damage if it is not available This was a widespread concern in the United States during the 1970s and 1980s Although laboratory tests have demonstrated that unleaded gasoline can damage valve seats in extreme cases, it affects only a negligible percentage of vehicles in actual use on the road Where such damage occurs, it can be repaired and further damage can be prevented by replacing the seats with hardened inserts The use of unleaded gasoline reduces corrosion and extends the lives of valves, spark plugs, engines, and exhaust systems Unleaded gasoline use reduces maintenance costs overall, as the savings from reduced corrosion are far more than the costs of the occasional cases of valve seat damage with unleaded fuel

Myth 2 Vehicles using unleaded gasoline must be equipped with catalytic converters It is true that vehicles with catalytic converters *require* unleaded gasoline to prevent lead deposits from poisoning the catalyst and blocking exhaust flow through the converter However it is also true that vehicles without converters can successfully use unleaded gasoline Thus, reducing or eliminating the lead content of gasoline will reduce lead emissions from both new and existing vehicles Exhaust hydrocarbon emissions are likely to decrease as well, due to the effect of reducing lead deposits in the combustion chamber

Myth 3 Emissions of toxic hydrocarbons such as benzene could increase greatly from unleaded gasoline use The changes in gasoline composition needed to meet octane specifications without lead may change the emissions of other pollutants For instance the use of alcohols or ethers as high-octane blendstocks tends to reduce hydrocarbon and carbon monoxide emissions, but may raise aldehyde emissions Increasing the fraction of benzene or other aromatic hydrocarbons in the fuel – if permitted – may lead to higher emissions of these compounds However, increased benzene emissions can be prevented by using such technologies as alkylation and isomerization to increase fuel octane levels instead of catalytic reforming, or by specialized processes that extract or chemically eliminate benzene In any event the effects of increased benzene emissions on public health would be minor compared to the benefits of reducing lead aerosol exposure

1 3 How To Use This Guide

The remainder of this chapter contains a checklist and summary of the issues and actions to consider in developing and implementing a lead phaseout policy The involvement of key stakeholders is presented last among these actions but its importance cannot be overstated Because it is critical to a lead phaseout strategy's success, it should be emphasized throughout the process

Implementers should first review the checklist, and then read the corresponding summaries in Section 1 4 Detailed information on each of the topic areas addressed in the checklist is presented in Chapters 2 through 11

1 4 Summary Of Issues And Actions To Consider In Phasing Out Lead In Gasoline

There are ten main issues and actions to consider in developing and implementing a lead phaseout policy Each of these topics is addressed in the subsections that follow

Checklist For Phasing Out Lead In Gasoline

Identify technical options for reducing or eliminating lead additives (Chapter 2)

- ❑ Characterize present gasoline supply
- ❑ Assess the domestic refining industry
- ❑ Identify alternative sources of gasoline octane value
- ❑ Evaluate gasoline supply scenarios
- ❑ Assess the impacts on gasoline distribution and marketing systems
- ❑ Assess the costs of alternative strategies to the fuel supply sector

Assess lead phaseout impacts on the vehicle fleet (Chapter 3)

- ❑ Assess maintenance benefits of unleaded gasoline
- ❑ Assess potential for valve seat damage
- ❑ Assess potential valve seat protection strategies
- ❑ Evaluate net costs and savings for the vehicle fleet

Assess lead phaseout effects on vehicle emissions and air quality (Chapter 4)

- ❑ Assess gasoline composition effects on emissions and air quality
- ❑ Assess need for policies affecting gasoline composition
- ❑ Consider vehicle emission control policy

Assess the health benefits of lead phaseout (Chapter 5)

- ❑ Estimate the air quality impacts of lead and lead alternatives
- ❑ Conduct risk assessment for lead and lead alternatives
- ❑ Assess the public health benefits of phasing out lead
- ❑ Conduct economic valuation of public health benefits

Conduct a cost-benefit analysis (Chapter 6)

- ❑ Identify alternative phaseout strategies
- ❑ Assess net costs to public and public health benefits of each strategy
- ❑ Select preferred phaseout strategy

Choose policy instruments (Chapter 7)

- ❑ Identify legal authority
- ❑ Assess available policy instruments
- ❑ Evaluate "fit" between strategy and instruments
- ❑ Select "best" combination of instruments

Monitor compliance (Chapter 8)

- ❑ Identify monitoring needs
- ❑ Identify legal authority/requirements for monitoring gasoline composition
- ❑ Identify institutional and physical requirements for monitoring
- ❑ Identify responsibilities for monitoring and enforcement
- ❑ Plan gasoline monitoring and enforcement program
- ❑ Implement gasoline monitoring and enforcement program
- ❑ Identify and prosecute violators
- ❑ Follow up to ensure that monitoring and enforcement are effective

Conduct followup evaluation and reporting (Chapter 9)

- ❑ Monitor trends in ambient lead and other air pollutants
- ❑ Monitor trends in human exposure to lead
- ❑ Evaluate the effectiveness of the phaseout program
- ❑ Identify the cause of any problems found
- ❑ Communicate results to the public, politicians, and legal authorities

Conduct public education (Chapter 10)

- ❑ Define public education goals
- ❑ Develop public education strategy
- ❑ Identify potential communication media
- ❑ Assign responsibilities for communication and public education
- ❑ Follow up to assess effectiveness of the communication program
- ❑ Begin public education activities

Ensure public consultation and involvement (Chapter 11)

- ❑ Identify stakeholders
- ❑ Identify strategy for stakeholder involvement
- ❑ Communicate risk assessment and benefit estimates
- ❑ Communicate/consult on alternative phaseout strategies

1 4 1 Identifying Technical Options For Reducing Or Eliminating Lead Additives

Lead additives typically improve the octane rating of gasoline by about 6 to 12 octane numbers, depending on the amount of lead added and the octane response of the base fuel To reduce or eliminate the use of these additives, it is necessary to find other ways to attain gasoline octane specifications

Some Options For Making Up Octane Shortfall When Lead Is Reduced Or Eliminated

Near-term options These include blending gasoline with such high-octane components as blending gasoline with methyl tertiary-butyl ether (MTBE), ethanol, alkylate, or mixtures of aromatic compounds Some countries have also used the manganese-based octane enhancer MMT (however, please see EPA's cautions about MMT in Section 2 6)

Longer-term options Here, the most economical approach is usually to add new refinery process units to convert the low-octane straight-chain paraffins in crude oil to higher-octane hydrocarbon types such as branched-chain paraffins, naphthenes, and aromatic compounds

Gasoline supply The first step in identifying options for making up the octane shortfall is to characterize the existing gasoline supply This includes the volume of gasoline consumed and its projected growth, and the sources of supply It is also necessary to identify the octane value, the paraffin, olefin, naphthene, and aromatic (PONA) content, and the lead content of gasoline from each source Alternative sources of gasoline supply should also be identified

Refining industry The second step is to assess the capabilities of the domestic refining industry, if one exists This would include its installed capacity, process units, octane production capability, the overall condition and economics of each refinery, and its technical and financial capabilities to invest in the construction of new process units This assessment should be carried out in consultation with the industry involved, and may require the assistance of specialist consultants

Octane value sources After characterizing gasoline supplies and the local refining industry, implementers are now ready to quantify the shortfall in the "octane pool" that would result from reducing or eliminating lead Once this is done, they should identify additional sources of octane value available to make up this shortfall, as well as the costs and investment needed per "octane-barrel" for each source The minimum time required to provide additional octane from each source should also be identified

Supply scenarios Once potential octane sources are identified, various combinations of sources can be assembled to make up the octane shortfall under different lead phaseout schedules

Impact assessment Different lead phaseout strategies may mean different requirements and costs for transporting and distributing gasoline blendstocks and finished gasoline Changes in the volume of imported gasoline and blendstocks may affect port and pipeline capacities, and possibly require additional investment to overcome bottlenecks Similarly, changes in the number of gasoline grades, or in the sales volume of different grades may affect distribution and marketing costs

Cost assessment The circumstances of a country will determine which specific lead phaseout schedules and strategies are to be assessed For each scenario assessed, the implementer should characterize the costs, investment requirements, and the reduction in lead emissions over time To ensure that all of the options are considered, the scenarios evaluated should include at least the two extreme cases

- A very quick phaseout in six months or less, with the octane shortfall made up by imported blendstocks
- A very slow phaseout over three to five years, in which lead concentrations would gradually be reduced as new refinery process units come on line

1 4 2 Assessing Lead Phaseout Impacts On The Vehicle Fleet

Maintenance benefits assessment To assess the maintenance benefits of unleaded gasoline, the implementer should quantify how often such maintenance as spark plug changes, oil changes, valve repairs, valve seat repairs, and exhaust system replacements must take place and their costs The change in these maintenance requirements can then be estimated using the information in Chapter 3

Valve seat assessment The implementer should also assess the potential for some engines to suffer valve seat damage from using unleaded gasoline and the costs of potential valve seat protection strategies if these are indicated

Cost/savings evaluation Here, the implementer should calculate and evaluate the resulting net benefits or costs to the vehicle fleet as functions of time for each of the lead phaseout scenarios considered, in order to compare them with the other costs and benefits

1 4 3 Assessing Lead Phaseout Effects On Vehicle Emissions And Air Quality

Gasoline composition effects assessment Phasing out lead will entail changes in gasoline composition, and these changes will affect the emissions of lead and other pollutants from gasoline vehicles For instance raising the aromatic hydrocarbon content of gasoline may increase emissions of benzene and other aromatics in exhaust and evaporative emissions Changes in gasoline composition may also affect the photochemical reactivity of volatile organic compound (VOC) emissions, and thus affect the formation of ground-level ozone (photochemical smog) In a number of cases, public concerns over these secondary effects have delayed lead phaseout programs

It is thus important to assess and quantify the potential secondary effects of lead phaseout on emissions and air quality The assessment should be included as part

of the phaseout plan, and – where necessary – measures should be taken to mitigate any adverse impacts Such measures might include setting limits on or taxing the benzene, aromatic, and/or olefin content of fuels, and limiting vapor pressure to minimize evaporative emissions (see Chapter 4)

Policy assessment Lead phaseout also provides an opportunity to assess the need for policies affecting gasoline composition This would include a more general review of emission control policies for vehicles and fuels, such as the adoption of catalytic converters and/or evaporative emission controls, and limits on gasoline sulfur content To the extent that such policies will mean changes in either the composition or the market shares of different fuels, they will affect investment plans in the refining and fuel distribution sectors To avoid waste and confusion, it is best that they be adopted as an integrated package with the lead phaseout policy, rather than in piecemeal fashion

1 4 4 Assessing The Health Benefits Of Lead Phaseout

Lead exposure risk and health benefits assessments To assess the health benefits of reducing or eliminating lead emissions, the implementer should ideally know how the distribution of lead concentrations in ambient air and in human blood will change in response to changes in gasoline lead concentrations Given this information, dose-response relationships derived from epidemiological data can be used to estimate the change in the incidence of high blood pressure, impacts on children's health, cardiovascular illness, and other health outcomes due to a given lead phaseout scenario Detailed data and calculation examples are given in Chapter 5

Economic valuation In comparing the health benefits with the costs of reducing lead in gasoline, it is often useful to express the health benefits in monetary terms The value to society of preventing a case of lead-related illness or premature death can be estimated based on treatment costs, lost productivity, and people's willingness to pay to reduce the risk of premature death and other adverse consequences If the decision has already been made to phase out lead, the best use of cost-benefit analysis is to compare and evaluate the costs and benefits of different options for phaseout Chapter 5 describes some of the bases for developing such estimates

1 4 5 Conducting A Cost-Benefit Analysis

Selecting a strategy should take into account the costs and benefits of the different alternatives, and such considerations as technical and political feasibility, the legal basis for the strategy, equity among different social sectors, and acceptability to political decision makers and to the public

Strategy identification, assessment, and selection First, the implementer should identify a number of alternative phaseout strategies Then, the strategies should be assessed to determine which of them are technically feasible, legally viable, equitable, and acceptable to decision makers and the public From these, he or she should select the one with the greatest net benefits The evaluation and selection processes are discussed in more detail in Chapter 6

1 4 6 Choosing Policy Instruments

One goal of this Guide is to provide tools to help the implementer carry out the appropriate lead phaseout strategy for his or her country Any one of these tools may be useful to a particular country, but not all of them will be useful to all countries

The potential policy instruments for implementing a lead phaseout strategy include regulatory "command-and-control" measures and market-based incentives Examples of *command-and-control measures* include limiting the maximum lead content of gasoline and prohibiting imports of lead additives Examples of *market-based incentives* might include a tax on lead additive imports, or on the lead content of gasoline sold Where legally feasible, market-based measures are generally preferable, as their flexibility reduces the chance that a regulatory mistake would disrupt the gasoline market, and may allow a faster phaseout overall

Legal authority and instruments In choosing policy instruments, the implementer should first identify the legal authority or authorities available as a basis for such instruments, and then assess the types of instruments legally permissible under that authority For example, governments often have the authority to limit or prohibit toxic substance emissions, but may require new legislation in order to change tax rates on fuel

Strategy fit and instruments selection The implementer should also assess the compatibility between the strategy chosen and the instruments available to implement it He or she should then select the best combination of instruments, considering their effectiveness, costs and benefits, timing, flexibility, and political acceptance

1 4 7 Monitoring Compliance

Sampling and checks to confirm that the gasoline sold complies with the lead limits and quality specifications in effect are integral parts of the lead phaseout strategy To guard against adulteration or smuggling, gasoline samples should be collected for analysis at retail service stations, as well as at the refinery and/or the port of importation Chapter 8 gives details on the sampling and analytical procedures for lead, gasoline octane, and gasoline properties and composition

Needs identification In developing this portion of the lead phaseout strategy, the implementer should identify the monitoring requirements These would include the number of samples and the types of locations to be sampled to ensure adequate coverage

Authority and responsibilities identification The implementer should identify the legal authority that will monitor fuel composition, including any ongoing monitoring efforts

Physical and institutional monitoring requirements identification The implementer should then identify the equipment and personnel required for the monitoring program, the institutional responsibilities of these personnel, and the sources of financing for any new equipment or personnel needed

Enforcement program planning and implementation, and prosecuting violators Based on the information developed, the implementer should work with the organizations responsible for enforcement to prepare a detailed plan for the enforcement program and obtain any necessary authorizations or approvals The agency responsible should then implement the plan, which should include provisions for identifying and prosecuting individuals who are violating the lead phasedown requirements

Followup Once the program is underway, the implementer should follow up to confirm that monitoring is being done according to the plan

1 4 8 Conducting Followup Evaluation And Reporting

Followup monitoring and evaluation are needed to ensure that the lead phaseout program achieves its goals, and to demonstrate to decision makers and the public that these goals have been achieved

Trends monitoring In addition to monitoring changes in the lead content of gasoline, implementers should assess the changes in concentrations of lead and other pollutants in ambient air and changes in the distribution of blood lead concentrations among the exposed population, particularly children Chapter 9 gives more information on monitoring and measurement techniques

Program effectiveness and communications In most cases, the followup evaluation will demonstrate that lead concentrations in air and in human blood have declined significantly This information should be communicated to decision makers and the public in order to maintain their support for the phaseout program Should the monitoring show that lead concentrations in either the air or the exposed population have not declined as expected, it may indicate that other sources of lead exist and need to be identified

1 4 9 Conducting Public Education

Goals definition An effective public education program will help assure public support for the lead phaseout policy The program goals ("the message") should include

- Making the public aware of the health and developmental problems caused by exposure to lead, and the importance of gasoline additives as the main source of lead in the environment
- Counteracting myths by providing accurate information about the ability of older vehicles to use unleaded gasoline and the maintenance benefits of reducing or eliminating lead
- Providing for effective dissemination and consultation about the overall lead phaseout strategy

Strategy, media, and responsibilities identification Specific strategies should be designed to meet the program's goals and be targeted to specific audiences The implementer should also identify appropriate communication media and assign responsibilities for communication and public education to the appropriate organization

Program followup During and after the public education process followup studies should be conducted These should assess the effort s effectiveness and determine whether further public education efforts are required

1 4 10 Ensuring Public Consultation And Involvement

The type and amount of public consultation and involvement needed in developing a lead phaseout strategy will vary depending on a country's institutional arrangements and practices As a general rule, active consultation with the businesses and organizations affected by the lead phaseout is important in reducing opposition and guarding against unforeseen consequences Consultation with public health and environmental organizations, and with concerned members of the public will generally help gain their support of the lead phaseout program

Stakeholder identification Effective public consultation should begin by identifying the stakeholders the individuals and organizations whose interests will be affected These include oil refiners and importers, retail service station owners and operators vehicle owners and their representatives, public health officials and the medical profession, parents, educators, and environmental organizations

Strategy identification and communications Implementers should define a strategy for communicating with stakeholders, and for involving them in the decisions on the lead phaseout through such means as public workshops This strategy should be closely linked to the public education strategy discussed in Section 1 4 9, to ensure that a consistent and effective message is communicated Equally important, implementers should pay careful attention to the questions and objections that surface during the public consultation process In some cases, these may only indicate a need for more effective public education, but they will often identify real problems that must be addressed in the program's design During meetings with stakeholders, implementers should communicate the results of risk assessments, benefit estimates and alternative phaseout strategies

1 5 Examples of Successful Lead Phaseouts

1 5 1 United States

In the 1970s, average lead concentrations measured in U S cities often far exceeded EPA's average air quality standard of 1 5 $\mu g/m^3$ (today, it is recognized that even this standard does not adequately protect human health) The mandatory sale of unleaded gasoline was introduced in 1974 in order to meet the needs of cars equipped with catalytic converters At that time leaded gasoline contained an average of 2 4 grams of lead per gallon (0 63 g/liter), and average blood lead concentrations among children in major cities were around 20 µg/dl (twice the level now considered to warrant medical action)

Through a phased program, the allowable lead concentration in leaded gasoline was reduced to 1 1 gram per gallon (0 29 g/l) by 1982 This program also introduced the trading of lead rights between refineries so that a refinery that was able to produce gasoline containing less than 1 1 gram per gallon could sell the excess "lead rights" to another refinery that needed them In 1984, a major cost-benefit evaluation (Schultz et al 1985) concluded that the benefits of further reducing lead use in gasoline greatly outweighed the costs and that

allowable lead concentrations should be reduced to a minimum as quickly as possible The allowable lead concentration was reduced to 0 5 gram per gallon in July 1985 and to 0 1 gram per gallon (0 026 g/l) on January 1, 1986 The allowable concentration was retained at this level until sales of leaded gasoline were finally banned in 1995

During the same period, emissions of lead from other sources were also reduced, as was the use of lead solder in cans Steps were also taken to reduce human exposure to lead in drinking water Figure 1 shows the resulting changes in nationwide lead emissions and in average blood lead content as measured in nationwide health studies Lead emissions to the atmosphere have been virtually eliminated in the United States, and average blood lead concentrations have been reduced more than 85 percent, to 2 3 µg/dl Today, the main sources of human exposure to lead in the United States are the legacy of past use lead paint and water pipes in old buildings, and lead-contaminated soil near roadways and industrial sites

Figure 1 Lead Emissions And Average Blood Lead Content In The United States, 1970-1995

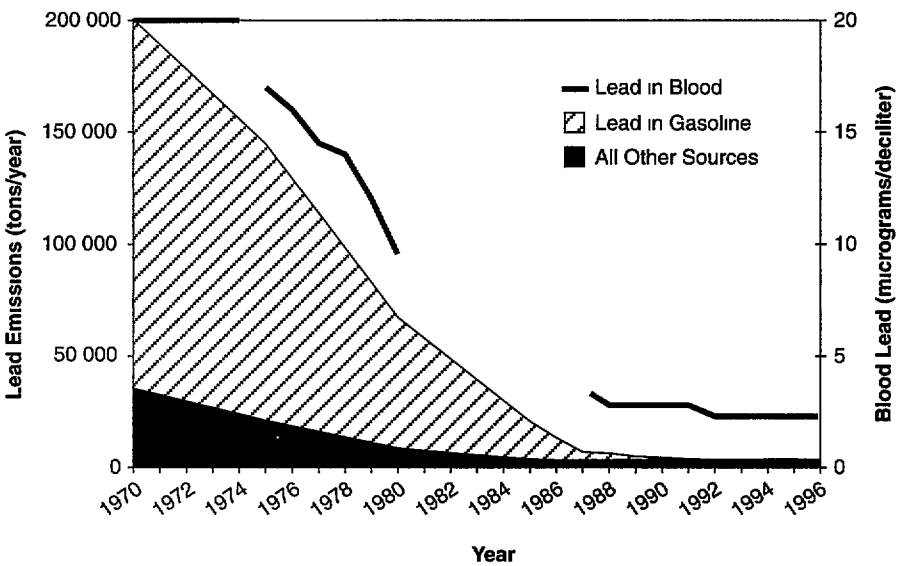

1 5 2 Mexico City[1]

Measured lead concentrations in Mexico City's air have fallen more than 98 percent in the last 10 years, despite increasing gasoline consumption This has been a result of gradual reductions in the lead content of leaded gasoline, as well as the introduction and increasing use of unleaded gasoline The reduction in lead content began in 1986, when a new specification of 0 5-1 0 ml of tetraethyl lead (TEL)/gallon was established, replacing the previous limit of 3 5 ml TEL/gal (1 ml TEL contains approximately 1 gram of lead) The standard was then successively reduced to 0 3 to 0 54 ml in 1991, 0 2-0 3 ml in 1992, and 0 2-0 1 ml/gallon in 1994 As a result of these increasingly stringent standards, lead emissions from gasoline decreased until they were practically eliminated, as shown in Figure 2

[1] This description was provided by Eng Sergio Sánchez former director of environmental planning for the Government of the Federal District of Mexico City

Figure 2 Use Of Lead In Gasoline In The Valley Of Mexico, 1988-1998

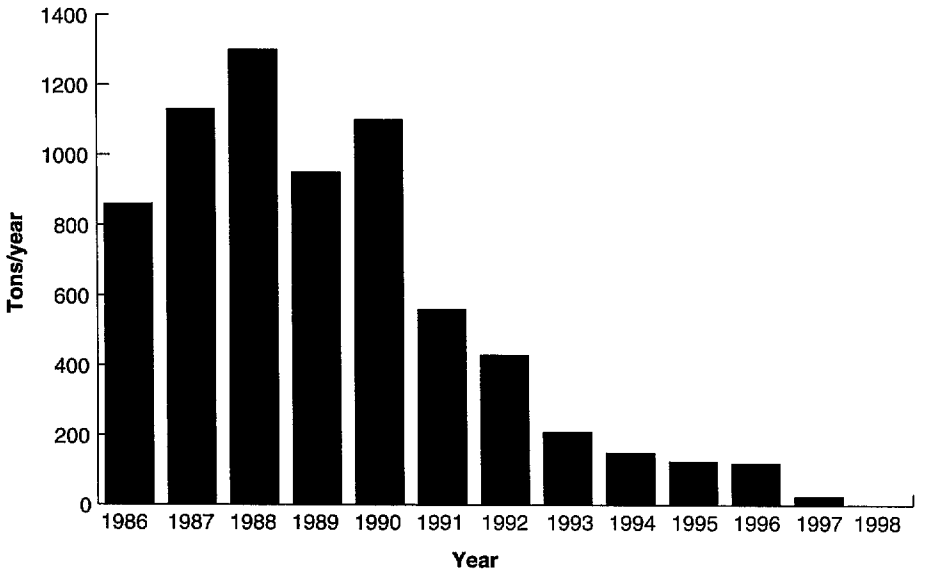

Unleaded gasoline was introduced in Mexico in September 1990 in order to accommodate the new vehicle emission standards adopted nationwide in 1991 These required the introduction of catalytic converters in new vehicles Unleaded gasoline sales in the Valley of Mexico increased as the catalyst-equipped vehicle fleet grew – especially after a change in tax structure in 1992, which brought the prices of leaded and unleaded gasoline closer together In 1995, the Mexican government announced its commitment to phase out leaded gasoline by the year 2000 This goal was achieved by the end of 1997 Since then, only unleaded gasoline has been distributed in Mexico

Reducing the lead content in leaded gasoline and the introduction of unleaded gasoline have been part of a comprehensive gasoline reformulation process intended to improve air quality by reducing toxic and ozone-forming components This reformulation process required a series of refinery improvement projects, including continuous catalytic reforming plants, isomerization plants, and plants for the production of methyl tertiary butyl ether (MTBE) and tertiary amyl methyl ether, as well as the addition of alkylation plants

Figure 3 illustrates the evolution of airborne lead concentrations, from 1988 to 1998, for three representative stations of the Air Quality Monitoring Network [2] In the late 1980s, lead levels peaked to more than 6 $\mu g/m^3$, and exceeded the 1 5 $\mu g/m^3$ three-month average standard throughout Mexico City With the reductions in fuel lead content, atmospheric lead concentrations gradually decreased to very low levels throughout the urban area The corresponding trend in average blood lead concentrations is shown in Figure 4 These concentrations have decreased dramatically, from about 16 µ/dl in 1988 to about 6 µ/dl today

[2] The Xalostoc station is located in an industrial area that is north and upwind of the urban area Merced station is located downtown in the middle of an active commercial area The Pedregal station is sited downwind in a residential area

Figure 3 Airborne Lead Concentrations In The Valley Of Mexico, 1988-1998

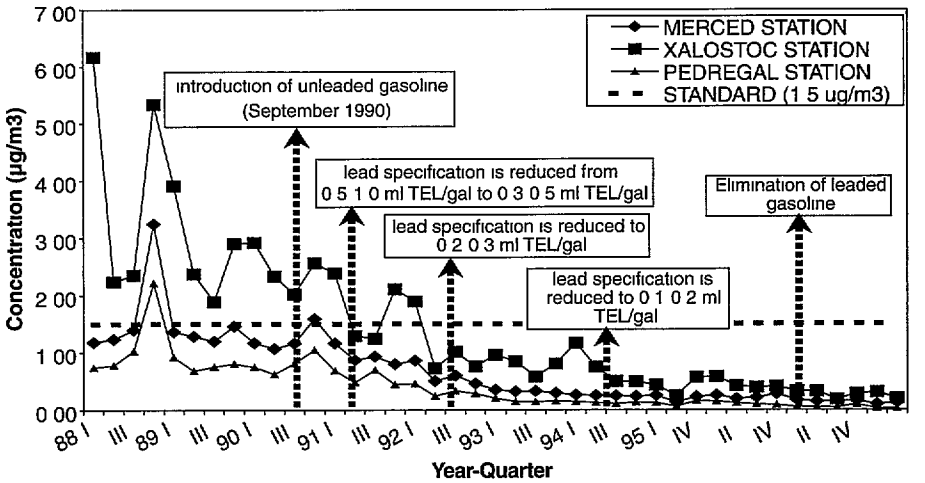

Source Mexico City Air Quality Monitoring Network

Figure 4 Average Blood Lead Content In Mexico City, 1977-1997

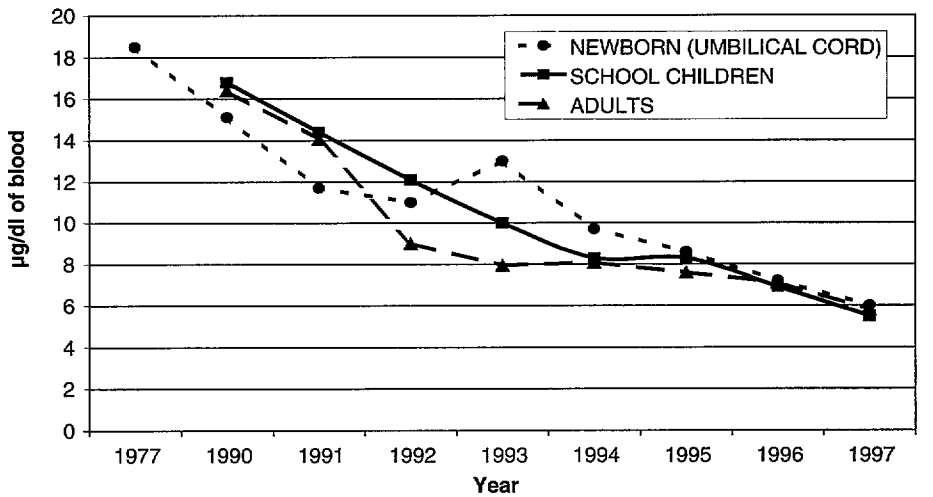

Source Mexican Institute of Public Health and American British Cowdray Hospital

The effects of lead on health and the impact of atmospheric lead levels have been extensively studied in Mexico (Pardon and Martinez, 1998) Some investigations made in the 1980s demonstrated impacts on weight at birth, IQ reduction and neurological and metabolic disorders related to lead A cost/benefit estimation of the reduction in airborne lead levels and health was made in 1993 (GIEP, 1993) According to that analysis, the total cost of lead content reduction and the use of unleaded gasoline was estimated at $717 million [3] The benefits for health and vehicle maintenance improvement were calculated at around $1,740 million [4] Therefore, the net benefit was estimated at $1,022 million

[3] Cost estimates included technology changes at refineries consumer costs for using unleaded gasoline and costs for introducing catalytic converters in new cars

[4] Benefit estimates considered medical treatment costs special education costs prevention of death from heart disease reductions in lost work and school days etc

Lead from gasoline has been eliminated as a threat to health in the Valley of Mexico However, other sources of lead exposure remain serious, such as lead from leaded pottery and paints

2. IDENTIFYING TECHNICAL OPTIONS FOR REDUCING OR ELIMINATING LEAD ADDITIVES

Lead is added to gasoline to improve knock resistance, as measured by the gasoline's octane rating Lead additives can be reduced or eliminated by employing other means to attain gasoline octane specifications A number of options are available to achieve increased octane levels without lead These options can be broadly categorized as

- Purchasing high-octane gasoline components and blending them into low-octane fuel
- Upgrading and adding refinery equipment to produce higher-octane gasoline components
- Using octane-enhancing additives based on substances other than lead

Lead additives typically improve the octane rating by about 6 to 12 octane numbers, depending on the amount of lead added and the octane response of the base fuel The technical options for making up the octane shortfall due to reducing or eliminating lead include

- *Near term* These include blending gasoline with oxygenates such as ethanol and methyl tertiary-butyl ether (MTBE), blending with high-octane hydrocarbon components such as alkylate and benzene-toluene-xylene (BTX) blends, and using the manganese-based octane-enhancer MMT
- *Longer term* The most economical way to increase octane is usually to add new refinery process units to convert low-octane hydrocarbons such as straight-chain paraffins into higher-octane hydrocarbon types such as branched-chain paraffins, naphthenes, and aromatic compounds

This chapter helps implementers to evaluate the physical and chemical options available for reducing or eliminating lead additives in gasoline, while maintaining octane levels It discusses

- Octane ratings worldwide
- The blending octane values attained with a number of gasoline components
- The relationship between lead concentrations and octane levels
- The octane producing capabilities of various refinery types
- The sources, volumes and prices of the oxygenates blended in gasoline and their impacts
- The properties and performance of the anti-knock additive MMT
- Considerations in developing a lead phaseout strategy

The Steps In Identifying Technical Options

1 Characterize the current gasoline supply

To identify the options for making up the octane shortfall by reducing or eliminating lead, one should first characterize the existing gasoline supply This includes the volume of gasoline consumed and its projected growth, and sources of supply It is also necessary to identify the octane value, the paraffin, olefin, naphthene, and aromatic (PONA) content and the lead content of gasoline from each source Alternative sources of gasoline supply should also be identified and characterized where possible

2 Assess the domestic refining industry

If there is a domestic refining industry, its capabilities should be assessed These include the installed capacity process units already in place, octane production capability, the overall condition and economics of each refinery, and its technical and financial capabilities to invest in the construction of new process units This assessment should be carried out in consultation with the industry involved, and may require the assistance of specialist consultants

3 Identify alternative sources of gasoline octane value

Having characterized gasoline supplies and the local refining industry, implementers can now quantify the shortfall in the "octane pool" that would result from reducing or eliminating lead Once this is done, they should identify the sources of additional octane value available to make up this shortfall as well as the costs and investment requirements per "octane-barrel" for each source The minimum time required to provide additional octane from each source should also be identified Different combinations of sources can then be assembled to make up the octane shortfall under different lead phaseout schedules

4 Evaluate gasoline supply scenarios

Once potential octane sources are identified, various combinations of sources can be assembled to make up the octane shortfall under different lead phaseout schedules

5 Assess the impacts on gasoline distribution and marketing systems

The requirements and costs for transporting and distributing gasoline blendstocks and finished gasoline may vary under different lead phase out strategies Changes in the volume of imported gasoline and blendstocks may affect port and pipeline capacities and possibly require additional investment to overcome bottlenecks Similarly, changes in the number or sales volume of different gasoline grades may affect distribution and marketing costs

6 Assess the costs of alternative strategies to the fuel supply sector

The specific lead phaseout schedules and strategies to be assessed will depend on each country's circumstances For each scenario, the implementer should characterize the costs investment requirements, and the reduction in lead emissions over time To ensure that the full range of options is considered the scenarios evaluated should include at least the two extreme cases a very quick phaseout in six months or less, with the octane shortfall made up by imported blendstocks, and a very slow phaseout in three to five years in which lead concentrations would gradually be reduced as new refinery process units come on line

2 1 Knock And Octane Rating

Definitions The octane number of a fuel is a measure of its resistance to detonation and "knocking" in a spark-ignition engine Knock reduces engine power output, and severe or prolonged knock will likely result in damage to the pistons and/or overheating of the engine The tendency for a fuel to knock increases with increasing engine compression ratio Higher-octane fuels are more resistant to knocking, and can thus be used in engines with higher compression ratios This is desirable, as higher compression ratios result in better thermodynamic efficiency and power output Engines designed for use with high-octane fuels can thus produce more power and have lower fuel consumption than engines designed for lower-octane fuels For a given engine design, however, there is no advantage in using a higher-octane fuel than what the engine requires

Engines designed for use with high-octane fuels can produce more power and consume less fuel than engines designed for lower-octane fuels

Measuring Octane Number

The octane number is measured by two standard tests — the research and motor octane tests The results of these tests are expressed as either the research octane number (RON) or the motor octane number (MON) of the fuel Both tests involve comparing the antiknock performance of the fuel to that of a mixture of iso-octane and n-heptane, with the "octane number" being defined as the percentage of iso-octane in the octane/heptane mixture that gives the same antiknock performance as the fuel under test For fuels with octane numbers above 100, mixtures of iso-octane and tetra-ethyl lead are used to extend the octane scale to 130

The research and motor tests differ in detail the research test reflects primarily low-speed, relatively mild driving, while the motor test reflects high-speed, high-severity driving Most fuels have a higher RON than MON In the United States and parts of Latin America, gasoline antiknock ratings are expressed as the average of RON and MON, denoted by (R+M)/2 Elsewhere, the RON is typically the value quoted, but specifications limit the minimum MON value as well

Why people buy high-octane gasoline In many countries, gasoline vendors have sought to associate high octane ratings with "quality" in the public mind, allowing them to charge much higher margins for "premium" gasoline, thus increasing their profits The public may buy this "premium" gasoline in the belief that they will reduce their vehicle's maintenance costs or improve its reliability Except for a few vehicles that *require* higher-octane gasoline (generally high-performance and luxury models), the extra money spent on higher-octane grades provides little or no benefit, while the extra lead and/or aromatic compounds that may be used to achieve the higher octane rating contribute to environmental degradation

Except for a few vehicles that require higher-octane gasoline, the extra money spent on higher-octane grades provides little or no benefit

Specifications for gasoline octane rating and lead content among some of the main automobile-producing countries and regions As Table 1 shows, the two main unleaded gasoline grades are an unleaded "regular" grade with typical RON and

MON values of 91 and 82 (corresponding to the U S (R+M)/2 specification of 87), and an unleaded 'premium" grade with typical RON and MON values of 95 and 85 respectively Most cars produced or sold in North America since 1975 have been designed to use unleaded regular fuel while most cars produced or sold in Europe in the last decade have been designed to use unleaded premium

Table 1 World Specifications For Gasoline Octane Rating And Lead Content

	Octane Rating			Max Lead*
Country/Grade	**RON**	**(R+M)/2**	**MON**	**(g Pb/lt)**
United States				
Regular		87	82	0 0
Mid grade		89		0 0
Premium		91 95		0 0
European Union				
Unleaded super	98		87 88	0 0
Unleaded premium	95		85	0 0
Leaded premium	96 99		86 87	0 15
Japan				
Premium	96			0 0
Regular	89			0 0
South Korea				
Unleaded	91		83	0 0
Thailand				
Premium	95		84	0 0
Regular	87		76	0 0
Proposed Latin America/ Caribbean Harmonized Standard				
Regular	91		82	0 0
Premium	95		85	0 0

Most countries allow a tolerance of up to 0 013 grams of lead per liter to account for possible cross contamination by leaded gasoline Actual lead concentrations are normally well below this level and often below detection limits

Sources Owen and Coley (1995) ESMAP (1998)

2 2 Hydrocarbon Classifications And Octane Values

The octane rating of a given gasoline blend is determined by

- The hydrocarbon composition of the fuel
- The content of high-octane non-hydrocarbon blendstocks such as ethers and alcohols
- The amount of antiknock additives used, if any

Because of non-linearities and interactions between different gasoline components, the effect of adding a given component to a given gasoline blend may not be strictly proportional to the octane value of the pure component For this reason, refiners have defined "blending octane values for different compounds that reflect their effects when blended into typical gasolines

Blending octane values Table 2 gives blending octane values for a number of typical gasoline components As this table shows, straight-chain "normal" paraffinic hydrocarbons have low octane values, while branched-chain isoparaffins, olefins, naphthenes, and aromatic hydrocarbons have higher octane values Oxygenated compounds such as alcohols and ethers also have very high blending octane values

"Straight run" gasoline distilled from typical crude oils has a high percentage of normal paraffins, and thus tends to have relatively low octane value Typical RON values for straight-run gasoline are in the range of 60 to 75 A major focus of modern refining technology is to improve the octane value of the hydrocarbons that are eventually blended into gasoline by converting them from normal paraffins to higher-octane aromatics, naphthenes, olefins, and isoparaffins

Refiners have defined "blending" octane values for different compounds that reflect their effects when blended into typical gasolines

Table 2 Blending Octane Values Of Some Typical Hydrocarbons And Gasoline Components

	RON	MON
Normal Paraffins		
n Hexane	19	22
n Heptane	0	0
n Octane	19	15
Isoparaffins		
2 3 Dimethylhexane	71	76
2 2 4 Trimethylpentane (iso octane)	100	100
Olefins (Alkenes)		
1 Butene	144	126
1 Pentene	119	109
Aromatics		
Benzene	99	91
Methylbenzene (toluene)	124	112
1 2 Dimethylbenzene (o xylene)	120	103
1 4 Dimethylbenzene (p xylene)	146	127
Naphthenes (Cycloalkanes)		
Cyclopentane	141	141
Cyclohexane	110	97
Oxygenates		
Methanol	127 136	99 104
Ethanol	120 135	100 106
Tertiary butanol	104 110	90 98
Methanol/TBA (50/50)	115 123	96-104
Methyl tertiary butyl ether (MTBE)	115 123	98-105
Tertiary amyl methyl ether (TAME)	111 116	98-103
Ethyl tertiary butyl ether (ETBE)	110 119	95-104

Source Owen and Coley (1995)

2 3 Properties Of Tetraethyl Lead

Tetraethyl lead (TEL) has been used to reduce the knocking tendencies of gasoline since 1922 Before advanced refining technology was developed, the antiknock properties TEL imparted to gasoline enabled the development of efficient, high-compression gasoline engines By adding approximately 0 8 to 1 0 gram of lead per liter to straight-run gasoline, the octane rating can be raised to around 85 RON The first higher-octane gasolines were produced in this way, and many of the smaller and older refineries in developing countries are still configured in this manner

With the development of advanced refining technologies, it is now possible to achieve high octane ratings without the use of lead

With the development of advanced refining technologies, it is now possible to achieve high octane ratings without the use of lead Where permitted by law, however, lead additives are still the cheapest means of producing high-octane gasoline

The relationship between lead concentration and octane increase As Figure 5 shows the octane boost due to lead typically varies both with the lead content and with the octane value of the base fuel The octane increase resulting from a given amount of lead is greater for low-octane regular gasoline than for higher-octane premium fuel This increase also varies with the amount of lead already in the fuel The first 0 1 g/liter of lead additive gives the largest octane boost, with subsequent increases in lead concentration giving progressively smaller returns *This non-linear relationship between lead addition and octane increase has very important implications for a lead phaseout strategy*

Figure 5 Octane Enhancement Vs Lead Concentration For Some Typical Gasolines

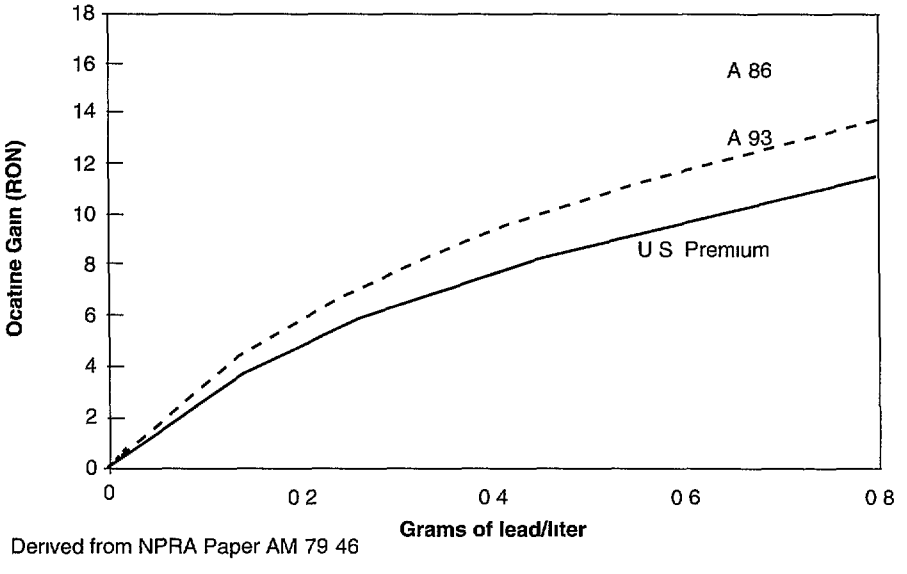

Derived from NPRA Paper AM 79 46

Source Abt (1996)

If refinery octane capacity is limited, the quickest and most economical way to reduce lead emissions will generally be to reduce the lead content of existing leaded gasoline grades as much as possible, rather than to encourage refiners and vehicle owners to switch from leaded to unleaded fuel The non-linear relationship between lead and octane means that less lead is required to produce two

liters of low-lead gasoline than to produce one liter of high-lead gasoline and one liter of unleaded with the same octane value

TEL additive package In order to prevent excessive buildup of lead deposits in the engine, TEL is normally sold and blended into gasoline in combination with a mixture of ethylene dibromide and ethylene dichloride, this mixture is known as "motor mix ' The bromine and chlorine atoms combine with lead in the combustion chamber to form lead bromide and chloride, limiting the buildup of lead oxide on the combustion chamber walls

TEL is extremely toxic and (unlike inorganic lead compounds) is readily absorbed through the skin, making it dangerous to handle Both ethylene dibromide and ethylene dichloride have been identified as possible carcinogens, as has inorganic lead

When refinery octane capacity is limited, the quickest and most economical way to reduce lead emissions is to reduce the lead content of existing leaded gasoline grades as much as possible, rather than to encourage a switch from leaded to unleaded fuel

2 4 Petroleum Refining And Gasoline Supply

Gasoline is produced by refining crude oil as a co-product with other oil products such as liquefied petroleum gas (LPG), kerosene, jet fuel, diesel fuel, fuel oils, lubricating oils, and feedstocks for the petrochemical industry Gasoline and diesel fuels comprise a large percentage (between 30 and 70 percent) of the products from most refineries Because of increasing demand for gasoline and diesel fuels compared to other products, and increasingly stringent environmental requirements for gasoline and diesel quality, the refining industry has had to undergo an important transition in technology and product slate

Crude oil contains a wide range of hydrocarbons, organometallics and other compounds containing sulfur, nitrogen, etc It varies in chemical composition, from oil field to oil field, and also with time within a given oil field The hydrocarbons (HCs) in crude oil are as simple as CH_4 (methane) or as complex as $C_{85}H_{60}$, with each of these compounds having its own boiling temperature A refinery will distill crude oil into various fractions and, depending on the desired final products, will further process and blend those fractions With gasoline making up only a fraction of the constituent hydrocarbons in crude oil, a refinery must either sell the remainder as marketable products or convert the larger molecules into smaller gasoline molecules

2 4 1 Different Refinery Types And Capabilities

Petroleum refineries vary greatly in size and complexity, depending on the level and sophistication of the physical and chemical processes they perform One commonly used classification divides refineries into three groups topping refineries (the simplest), hydroskimming refineries, and "complex" refineries

Topping refinery The initial processing step in all petroleum refineries is the separation of crude oil by distillation into a variety of process streams with different boiling ranges (Figure 6) In a topping refinery, these "straight run" process streams receive minimal further processing (e g , to remove impurities such as sulfur) before being blended into final products Topping refineries do not include process units designed to increase the octane of the "straight-run' gasoline they produce, and must therefore rely on the use of lead additives or other blending components such as oxygenates in order to meet octane specifications

Figure 6 Distillation Of Crude Oil

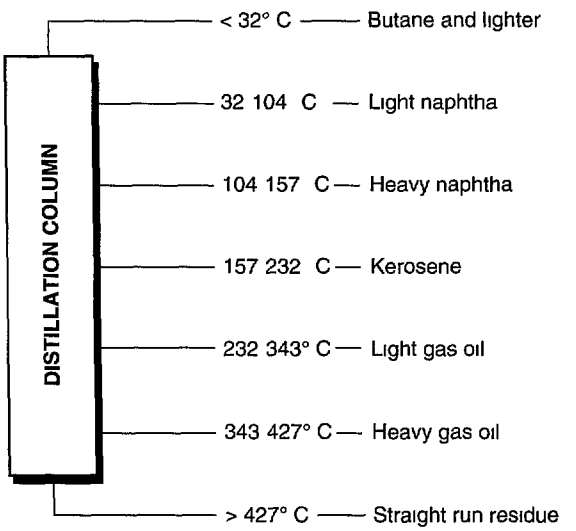

Although many older refineries were originally built as topping refineries, most of these have since been upgraded to hydroskimming or complex types The few remaining topping refineries are mostly small units serving isolated markets in developing countries

Hydroskimming refinery A hydroskimming refinery is similar to a topping refinery, except that it includes one or more catalytic reformer units As discussed in Section 2 4 2, the catalytic reformers convert some of the low-octane paraffinic components in "straight run" gasoline into higher-octane aromatics and naphthenes This operation produces excess hydrogen, which is often used for hydrotreating the jet and diesel fuel streams to remove sulfur and improve combustion quality Otherwise, it may be burned as fuel Figure 7 shows a simplified process diagram for a typical hydroskimming refinery

Topping and hydroskimming refineries have little flexibility to change the proportion of crude oil input that goes to different products The relative amounts of gasoline, jet fuel, diesel, and fuel oil produced are determined primarily by the hydrocarbon composition of the crude oil A crude oil with a high percentage of light hydrocarbons will make it possible to produce more gasoline and diesel fuel, while a heavier crude oil will result in greater production of heavy fuel oil In the last two decades, the demand for (and hence the value of) "white" products such as gasoline and diesel fuel has increased more than that for "black" products such as fuel oil As electrical generation increasingly shifts from oil-fired steam turbines to natural gas-fired combined-cycle plants, this trend is likely to continue

Figure 7 Simplified Process Diagram For A Hydroskimming Refinery

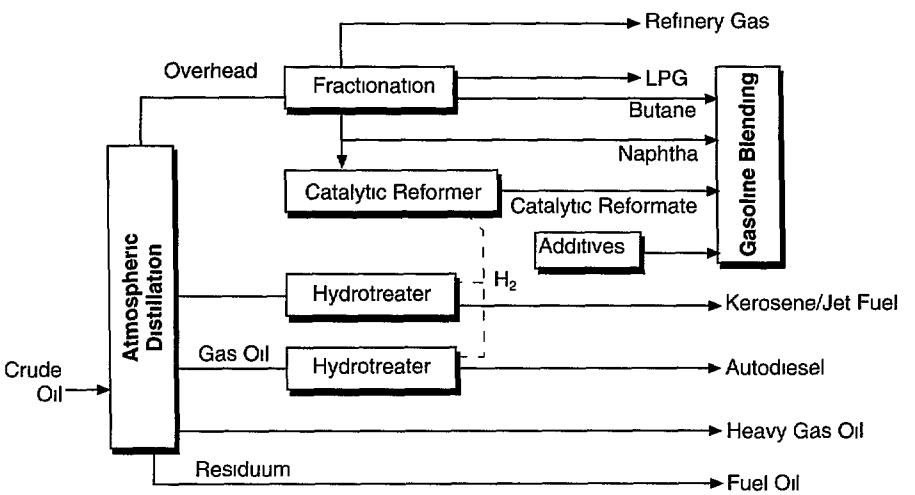

Complex or "conversion" refineries These refineries are distinguished from topping and hydroskimming refineries by possessing one or more process units intended to convert low-value residual products into higher-value products such as gasoline and diesel fuel The most common conversion unit is a fluid catalytic cracker (FCC) This process unit heats the heavy gas oils produced by vacuum distillation of the residual oil in the presence of a catalyst, causing the large hydrocarbon molecules present in these oils to "crack" into smaller molecules The resulting product is high in naphthenes, aromatics, and olefins, and thus has a relatively high octane value This process also produces a significant amount of light olefins (propene and butenes) These can be used in subsequent process units to produce high-octane species such as alkylate and ethers Figure 8 shows a process diagram for a typical deep conversion refinery

Figure 8 Process Diagram Of A Deep Conversion Refinery

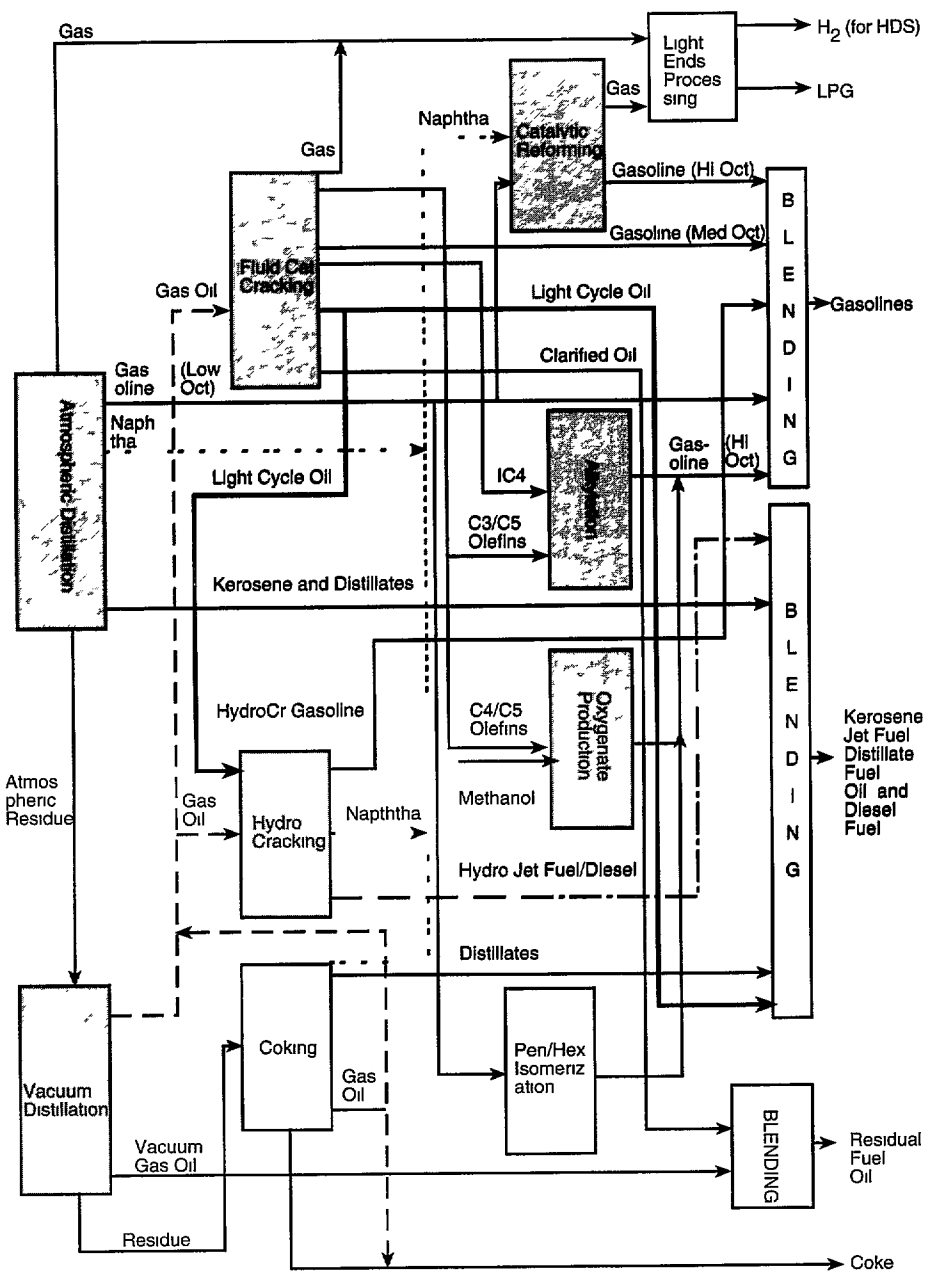

Source Abt (1996)

Hydrocracking, a related process, is carried out in the presence of excess hydrogen, and thus tends to produce less in the way of unsaturated aromatics and olefins This process is becoming increasingly popular, however, because it produces very high-grade, low-sulfur diesel and jet fuels The gasoline-range product produced by the hydrocracker is often further processed by catalytic reforming to increase its octane rating

The residuum left after the vacuum distillation of crude oil is a heavy, tarry substance that must be heated in order to be pumped, and which contains much of the sulfur and metallic contaminants found in the crude oil This residual oil can be used as fuel in power plants and marine vessels As environmental concerns have shifted fuel demand for electric generation from oil to low-sulfur natural gas for power generation, however, an increasing number of refineries have adopted "*deep conversion*" techniques such as thermal cracking or coking to crack this residual material as well

2 4 2 Principal Process Streams Used In Gasoline

In a modern refinery, a number of process streams are blended together to form the gasoline "pool " Table 3 lists some of these, along with the corresponding octane numbers In the simplest case, a topping refinery, the gasoline pool comprises light naphtha, heavy naphtha, and enough butane to bring the vapor pressure of the resulting product up to specification In a hydroskimming refinery, the heavy naphtha is sent to the catalytic reformer, producing reformate to be blended into the gasoline pool Within some limits, the octane value of the reformate can be varied by increasing or decreasing the severity of reforming More severe reforming gives a higher octane rating, but a lower gasoline yield Table 4 shows typical feed and product composition for a catalytic reformer Catalyst manufacturers are continually working to improve the efficiency and octane yields of catalytic reformers

Table 3 Typical Octane Values For Some Process Streams Used In Gasoline Blending

Blending Component	RON	MON
Butane	93	92
Straight run light naphtha	66	62
Straight run heavy naphtha	62	59
Catalytic reformate	94-100	84-88
Alkylate	97	96
Pen hex isomerate	84-89	81 87
Cat cracked gasoline	92	77
Coker gasoline	85	77
Light hydrocrackate	75	74
Heavy hydrocrackate	79	76

Sources Leffler (1984) Meyers (1996)

Table 4 Typical Feed and Product Composition for a Catalytic Reformer		
	% Volume	
Hydrocarbon Type	Feed	Product
Paraffins	50	35
Olefins	0	0
Naphthenes	40	10
Aromatics	10	55

Source Leffler (1984)

Light straight-run naphtha includes a large percentage of n-pentane and n-hexane, compounds with very low octane values The octane value of this stream can be raised considerably by processing it in a pentane-hexane isomerization unit to convert these straight-chain paraffins to their branched-chain equivalents The resulting isomerate can vary from 84 to 89 RON, depending on the process configuration

Gasoline-range hydrocarbons from catalytic or thermal cracking (coking) are rich in aromatics, naphthenes, and olefins, and thus have relatively high RON values The gasoline-range products of hydrocracking are much lower in aromatics and olefins, and thus have lower RON, but good MON, values

Catalytic cracking and deep conversion processes also produce significant quantities of light olefins such as butenes and propene In a process called alkylation, these compounds are reacted with isobutane to form isoparaffins containing seven or eight carbon atoms The resulting alkylate has an extremely high RON and MON, making it very valuable in meeting octane specifications Isobutene and isoamylene can also be reacted with methanol in an etherification unit to form MTBE and TAME (tertiary amyl methyl ether), respectively

Unlike olefins and aromatic compounds, the isoparaffins in alkylate and isomerate are not considered highly toxic or carcinogenic, and have low reactivity in the formation of photochemical smog Thus, these compounds are especially desirable for producing cleaner-burning "reformulated" gasoline

2 4 3 Examples Of Refinery Upgrades To Produce Unleaded Gasoline

The worldwide demand for petroleum products has shifted strongly toward unleaded gasoline and low-sulfur, high-cetane diesel fuel, and away from "black" products such as heavy fuel oil In response, many refineries are installing additional process units to upgrade the clear octane rating of gasoline in order to do without lead, and to convert an increasing fraction of low-value residual oil into high-value products such as gasoline and diesel

Many refineries are installing additional process units to upgrade the clear octane rating of gasoline in order to do without lead

Slovak Republic The upgrade of the Slovnaft refinery in the Slovak Republic over the last decade (Lovei, 1997) is a typical example of the upgrading process Originally configured as a hydroskimming refinery, the Slovnaft refinery was upgraded in several stages The first stage was to increase the severity of catalytic reforming, making possible a reduction in gasoline lead content from 0 7 to 0 4 grams per liter Blending MTBE and adjusting the distillation process made it

possible to reduce lead further to 0 25 gram per gallon In the second stage, a hydrocracker was added to convert part of the crude residue to gasoline and diesel fuel stocks Reforming the hydrocracked gasoline stream made it possible to reduce the lead content of 96 RON fuel to 0 15 g/gallon, and at the same time to introduce unleaded gasoline at 95 RON In the third stage, an isomerization unit was added as well, making it possible to eliminate lead completely Figure 9 shows how the Slovnaft refinery evolved during this period

Figure 9 Evolution Of The Slovnaft Refinery, Slovak Republic

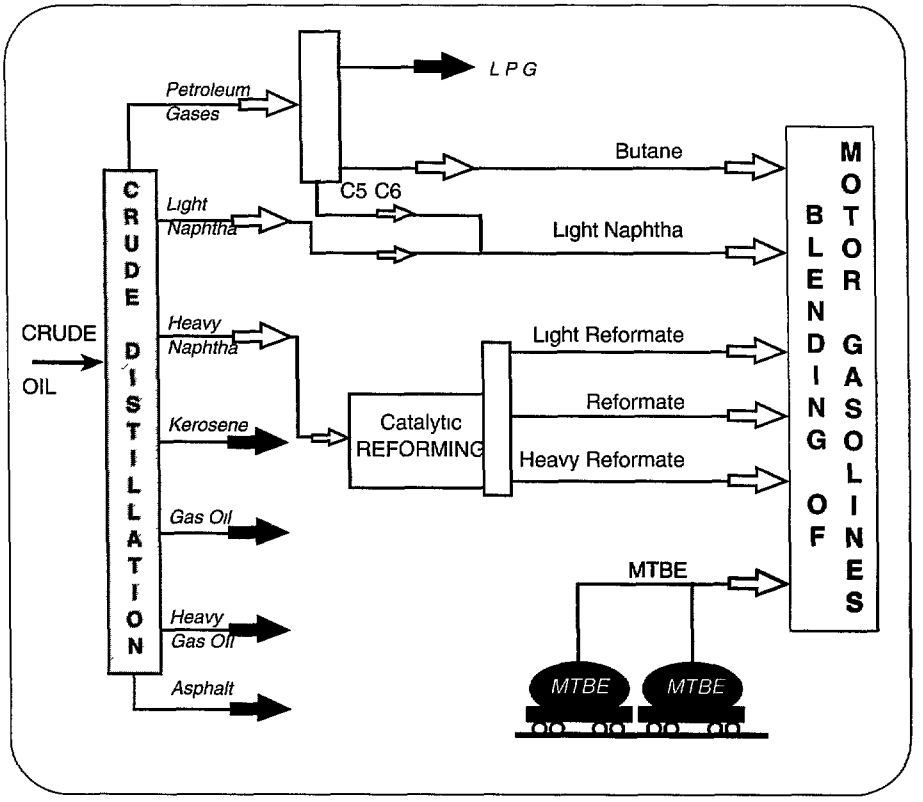

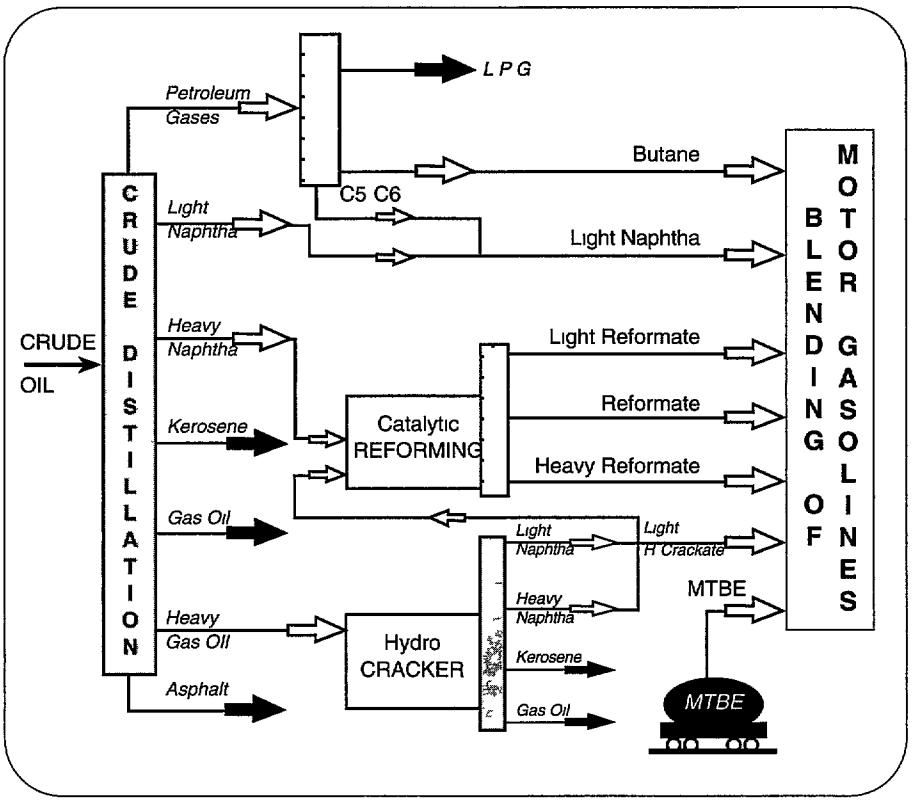

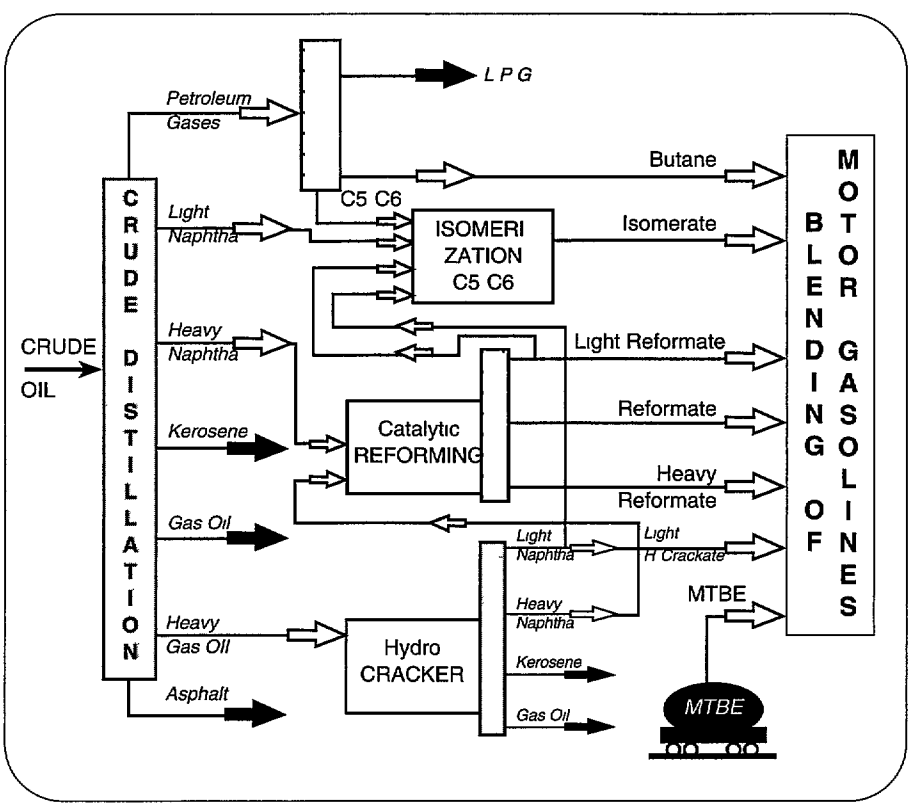

Source Lovei (1997)

Russia Many Russian refineries are being updated to be able to produce unleaded gasoline, both to meet Russian lead phasedown targets and for export The Perm refinery, opened in 1958 and located in the North Urals region, provides an example This refinery is one of the largest in Russia with a crude oil capacity of 300,000 barrels per day The first step implemented was to replace the catalyst in the largest of the four existing catalytic reformers with an improved catalyst provided by UOP This and related operational changes increased the octane value of the reformate from 91 to 99 5, while nearly doubling the cycle time between catalyst regenerations Two other catalytic reformers were subsequently shifted to use the new catalyst type (Shuverov et al , 1997) At the same time, the crude distillation units were revamped, and a vacuum distillation unit was installed to recover additional heavy gas oil from the residue from the crude distillation units

The next steps at the Perm refinery will include a hydrocracking unit to break down the heavy gas oil into lighter products in the gasoline and diesel fuel ranges, revamp the existing catalytic cracking unit, make further upgrades to the catalytic reformers, and install a di-isopropyl ether plant The cost of these changes is estimated at US $340 million (Rudin 1998) A later set of upgrades is planned to include another hydrocracker for the vacuum distillation residue and an alkylation unit to increase gasoline octane capacity These and related changes are expect to cost $290 million

Another Russian refinery going through the upgrading process is Sibneft's Omsk refinery in Siberia This refinery is increasing octane capacity by constructing a sulfuric acid alkylation unit with 8,600 barrels per day capacity, and a semiregenerative catalytic reforming unit capable of processing 25,000 barrels per day The project is estimated to cost $55 million, and will be completed in 2000

Persian Gulf Many refineries in the Persian Gulf are also being upgraded to meet market demands for unleaded gasoline and lower fuel oil production A good example is the Sitra refinery in Bahrain The refinery plans to cut fuel oil production by more that half, from 26-27 percent of total product output to 10-12 percent, while increasing gasoline production by the same amount The proposed upgrade includes replacing four atmospheric distillation units with a single 15,000 barrel per day unit, a 7,500 barrel per day LPG recovery unit, an 18,000 barrel per day catalytic reformer, a 750 barrel per day MTBE unit, and a 4,600 barrel per day alkylation unit The project is expected to cost about $600 million

2 5 Oxygenates As Gasoline Blending Components

Brazil has successfully blended 22 percent ethanol in gasoline for many years, thus completely eliminating the use of lead additives while requiring little in the way of refinery process equipment to increase gasoline octane

Several oxygenated compounds are commonly used as high-octane blending components for gasoline They include methyl tertiary butyl ether (MTBE), tertiary amyl methyl ether (TAME), di-isopropyl ether (DIPE), and ethanol (ethyl or grain alcohol) Of these, MTBE and ethanol account for by far the largest shares MTBE is typically blended with gasoline at levels up to 15 percent by volume, while ethanol is blended up to 10 percent by volume in the United States Brazil has successfully blended 22 percent ethanol in gasoline for many years, thus completely eliminating the use of lead additives while requiring little in the way of refinery process equipment to increase gasoline octane

In the past, methanol (methyl or wood alcohol) was also blended with gasoline to some extent, combined with tertiary butyl alcohol as a cosolvent Such use is no longer common, however, due to economic considerations

In addition to increasing octane, the blending of gasoline with oxygen-containing compounds such as ethanol and the ethers helps to reduce carbon monoxide and hydrocarbon emissions from vehicles using the fuel This effect is greatest for vehicles without emission control systems, and relatively small for modern vehicles equipped with closed-loop control of the air-fuel ratio To take advantage of this effect, U S specifications for reformulated gasoline require at least 2 percent oxygen by weight, and 2 7 percent in winter months, when CO emissions tend to be highest

As Table 2 shows, the blending RON of MTBE is about 115 to 123 Thus, blending 15 percent MTBE into gasoline having a base RON of 87 will result in a blend with RON in the range of 91 to 92 an increase of four to five octane numbers, or the equivalent of 0 1 to 0 15 g/liter of lead Similarly, the blending octane value for ethanol is 120 to 135, so that a 10 percent blend of ethanol with 87 RON gasoline will give a RON of 90 to 92 for the blend

At current prices, MTBE is considerably cheaper than ethanol Most of the reformulated gasoline sold in the United States thus contains MTBE, except where state tax subsidies encourage ethanol blending MTBE is also very widely blended into gasoline in Mexico, Egypt, Thailand, Argentina, and other countries MTBE use has recently become controversial in the United States, however, due to concerns over ground and surface water contamination

Although MTBE is considerably cheaper than ethanol at current prices, its use has become controversial due to concerns over ground and surface water contamination

2 5 1 Sources, Supply Volumes, And Prices

MTBE is produced by reacting isobutene (2 methyl propene) and methanol in the presence of a catalyst The isobutene may be obtained from a refinery, but more commonly is produced in a stand-alone plant by the dehydrogenation of isobutane extracted from natural gas Methanol, the other feedstock, is usually produced by the partial oxidation of methane from natural gas Methanol can also be reacted with isoamylene (2 methyl butene) to produce TAME, and ethanol can be reacted with isobutene to produce ETBE using the same process unit, thus providing some flexibility in feedstock selection (Meyers, 1996)

Due to the worldwide phaseout of leaded gasoline and the increasing demand for clean-burning "reformulated" gasoline, demand and production capacity for MTBE and other ethers have been growing rapidly over the last two decades In 1997, there were 172 MTBE plants in operation worldwide, with a total production capacity of 502,000 barrels per day (80,000 m^3/day), and 20 TAME plants with a combined capacity of 46,000 barrels per day (7,300 m^3/day) (Saunders, 1997) Another 76 oxygenate plants were planned or under construction at that time If all of these plants were completed, they would add another 337,000 barrels per day to world MTBE capacity by 2000, significantly exceeding the projected demand of 582,000 barrels per day

Market prices for MTBE and methanol have historically been highly volatile, due to a combination of low short-term elasticity of supply and unpredictable fluctuations in demand For example, September 1998 MTBE prices of US $215 to $230 per metric ton were 25 percent less than those prevailing one year

earlier, and more than 40 percent below the peak prices of over $355 per ton reached in 1992 and 1994 The price of methanol on the world market has fluctuated even more dramatically, from around US $0 25/gallon in the early 1980s to $0 60-0 70 in the late 1980s, to as much as $1 80 in 1994, and then to $0 30 per gallon in summer 1998 The lower prices reflect the effects of a glut, while the higher values reflect shortages

Ethanol is produced primarily by the fermentation of starch from grains or sugar from sugar cane As a result, the production of ethanol for fuel is in direct competition with food production in most countries The resulting high price of ethanol (ranging from $1 00 to $1 60 per gallon in the United States in the last few years) has effectively ruled out its use in motor fuel except where (as in Brazil and the United States) it is heavily subsidized New developments in the fermentation of cellulosic biomass offer some potential for lower-cost production of ethanol in the future, but this technology has not yet been demonstrated in a full-scale plant

2 5 2 Impact On Vehicles

Corrosion and materials compatibility Blends of MTBE and other ethers in gasoline have been used successfully for many years in several countries, including the United States No problems with materials compatibility or corrosion have been identified in either the vehicle or fuel distribution system There have been some reports of corrosion problems with alcohol blends (Owen and Coley, 1995) However, analyses of the available data by EPA (1985) indicate that alcohol mixtures did not result in corrosion or damage to fuel system elastomers when the base gasolines were blended properly and typical corrosion inhibitors were used In practice, the widespread addition of ethanol to gasoline has not created significant problems in the United States or Brazil

Leaner air-fuel mixtures Unless the fuel system is adjusted to compensate for the oxygen content, the use of oxygenate/gasoline blends results in a somewhat leaner mixture than would result from an all-hydrocarbon fuel This is the major source of the emission reductions experienced with the use of oxygenates, and usually presents no performance problems If a vehicle were adjusted with the air-fuel ratio already near the lean limit, however, the additional enleanment due to the oxygenate could cause performance problems

Fuel and energy consumption Because oxygenated gasolines contain less energy per unit volume than gasolines without oxygen, the volumetric fuel consumption (liters per 100 km) may increase by a few percent using oxygenated fuel Specific energy consumption usually improves slightly, however, due to the overall leaner mixture

The leaner air-fuel mixture produced by the addition of oxygenates to gasoline helps reduce CO and HC emissions, while NO_x emissions may increase slightly

2 5 3 Impact On Pollutant Emissions

Carbon monoxide and hydrocarbons Assuming no change in the settings of the fuel metering system the addition of oxygenates to gasoline will result in a leaner air-fuel mixture, thus helping to reduce exhaust CO and HC emissions This approach has been made mandatory in a number of localities suffering from high wintertime CO emissions (CO emissions are highest at low temperatures, with low traffic speeds, and at high altitude)

Oxides of nitrogen Recently a test program that studied the impact of ethanol and MTBE on NO_x emissions attracted considerable attention when it stated that, although HC and CO emissions are reduced by the use of oxygenates, NO_x emissions may increase slightly by the leaner operation (see the Auto/Oil Air Quality Improvement Research Program, AQIRP, 1992) EPA studied this issue carefully and reached a different conclusion from the AQIRP study In developing the Agency s own highly complex model, EPA concluded that NO_x emissions are not significantly affected by the addition of oxygen to the fuel These data were based on more than 4,000 individual vehicle tests of 1990 technology vehicles and on many test programs

Moreover, the use of oxygenates in a real-world refining situation typically results in significant decreases in olefins and sulfur as well as aromatics, due to both simple dilution and to octane considerations This, EPA found, results in significant NO_x decreases, especially in vehicles with catalysts

Research results The Auto/Oil Air Quality Improvement Research Program (AQIRP) study in the United States tested the effects of adding 10 percent ethanol (3 5 wt percent oxygen) and 15 percent MTBE (2 7 wt percent oxygen) to industry average gasoline For late-model gasoline vehicles with three-way catalysts, the ethanol addition results showed a net decrease in non-methane hydrocarbon (NMHC) and CO emissions of 5 9 percent and 13 4 percent, respectively, and a net increase in NO_X emissions of 5 1 percent The MTBE addition results showed net decreases in NMHC and CO of 7 0 percent and 9 3 percent, respectively, and a net increase in NO_X emissions of 3 6 percent (Hochhauser and others, 1991) In tests performed in Mexico City, the addition of 5 percent MTBE to leaded gasoline was found to produce a 14 7 percent reduction in CO and an 11 6 percent reduction in HC emissions from non-catalyst gasoline vehicles

Tests in Mexico City found that adding 5 percent MTBE to leaded gasoline produces reductions in CO and HC emissions from non-catalyst gasoline vehicles

Mandating the use of oxygenates to reduce emissions The State of Colorado (USA) initiated a program to mandate the addition of oxygenates (such as ethanol and MTBE) to gasoline in the Denver metropolitan area during winter months when high ambient CO tends to occur The mandatory oxygen requirement for the winter of 1988 (January to March) was 1 5 percent by weight, equivalent to about 8 percent MTBE For the following years, the minimum oxygen content required was 2 percent by weight, equivalent to 11 percent MTBE These oxygen requirements were estimated to reduce CO exhaust emissions by 24-34 percent in vehicles already fitted with three-way catalyst systems The success of this program led the U S Congress to mandate the use of oxygenated fuels (minimum 2 7 percent oxygen by weight) in areas with serious winter-time CO problems

The U S Congress has mandated the use of oxygenated fuels in areas with serious winter-time carbon monoxide problems

Evaporative emissions Although exhaust HC emissions tend to be lower with oxygenate blended fuels, the use of alcohols as blending agents may increase evaporative emissions considerably Because of their non-ideal behavior in solution, blends of ethanol or methanol with gasoline have higher vapor pressure than either component alone

However, although mass HC emissions may increase from a higher Reid vapor pressure (RVP) caused by the use of ethanol, data indicate that the ozone-causing

reactivity of the resulting emissions is less, thus resulting in no real ozone degradation

Effects of oxygenates The presence of oxygenates in the fuel changes the hydrocarbon composition of the exhaust and evaporative emissions For gasoline containing 11 percent MTBE, exhaust MTBE emissions account for about 2 5 percent of total exhaust VOC emissions, and 8 to 10 percent of total evaporative emissions (California EPA, 1998) Formaldehyde emissions also tend to increase with MTBE, while emissions of benzene and 1,3 butadiene are reduced significantly The use of ethanol in gasoline increases ethanol and acetaldehyde emissions, while also reducing emissions of benzene and 1,3 butadiene

2 5 4 Impact On Soil, Groundwater, And Surface Waters

Unlike most hydrocarbons, both alcohols and ethers dissolve readily in water Thus, where spilled gasoline comes in contact with water, the oxygenate can be expected to migrate from the gasoline into the water This presents little problem in the case of the alcohols, as these have been shown to biodegrade fairly rapidly In the case of MTBE and other ethers, however this degradation appears to be slower, if it occurs at all

Soil Gasoline containing oxygenates is no more hazardous than ordinary gasoline when spilled on or leaked into soil Indeed, because these oxygenates tend to replace more hazardous compounds such as benzene or TEL, spills of oxygenated gasoline will generally be less hazardous In addition, alcohols in soil tend to biodegrade rapidly

Groundwater In a number of cases, leaking underground tanks containing MTBE-gasoline blends have resulted in the contamination of groundwater with MTBE Although the level of health risk posed by this contamination appears to be small, the taste and odor of MTBE can be detected in water at concentrations as low as 50 parts per billion (ppb) The current EPA Drinking Water Advisory level for MTBE is 20 to 40 ppb, based on the taste and odor thresholds, and a 10,000-fold safety factor below the lowest observed adverse effect level in animals (California EPA, 1998)

Surface waters MTBE contamination of surface waters has also been detected on occasion as a result of fuel spills into the water body The use of two-stroke gasoline engines in outboard motors and personal watercraft has also contributed to contamination in some cases These engines emit as much as 50 percent of the total fuel they consume in their exhaust, which is injected into the water So far, the levels of surface water contamination due to this source have all been found to be well below the EPA advisory levels (California EPA, 1998) However, concerns about the potential for widespread contamination of drinking water sources with MTBE have led to calls for the use of MTBE in gasoline to be banned in California

2 5 5 Health Risks Associated with MTBE

Chronic inhalation studies in animals suggest that MTBE may be weakly carcinogenic, with an estimated unit risk of 7 5 x 10^{8} for mouse liver tumors and 1 7 x 10^{7} for rat kidney tumors For comparison, unit risk values for benzene and 1,3 butadiene – two other toxic air contaminants associated with gasoline – are 8 3 x 10^{6} and 2 8 x 10^{-4}, respectively

An analysis by the California Air Resources Board found that overall toxic risk from using reformulated gasoline containing MTBE was reduced by more than 40 percent compared to that to be expected from industry-average gasoline without MTBE (California EPA, 1998)

In California, concerns about the potential for widespread contamination of drinking water sources with MTBE has led to calls to ban the use of MTBE in gasoline

2 6 MMT Properties And Performance

The only non-lead antiknock additive now offered commercially is methylcyclopentadienyl manganese tricarbonyl (MMT) Its manufacturer recommends the use of MMT concentrations up to 0 0165 grams of Mn (manganese) per liter in gasoline intended for non-catalyst vehicles, and half this concentration in gasoline intended for catalyst cars At the 0 0165 gram per liter concentration, it adds about 1 9 octane numbers to gasoline In the United States, MMT concentrations are limited to 0 00825 gram per liter to protect emission control systems

The use of MMT as an octane-enhancing additive in gasoline is controversial, due to concerns over its possible effects on automotive emission control systems, and over the toxicity of the resulting manganese emissions During the 1980s, when lead concentrations in U S gasoline were severely limited, MMT was used extensively to improve the octane rating of leaded gasoline MMT was also used extensively in both leaded and unleaded gasolines in Canada

MMT was not permitted in unleaded gasoline sold in the United States until 1996, when EPA lost a lawsuit filed by the manufacturer, Ethyl Corporation, after rejecting the company's application to approve MMT for unleaded gasoline use EPA's disapproval was due to uncertainty over the potential toxic effects of manganese emissions In its 1994 rejection of Ethyl's petition to approve MMT, EPA concluded that "*Although it is not possible based on the present information to conclude whether specific adverse health effects will be associated with manganese [exposures resulting from the use of MMT] neither is it possible to conclude that adverse health effects will not be associated with such exposures*"[5] Auto manufacturers had also opposed the approval of MMT, arguing that it could impair the effectiveness of vehicle emission control systems EPA concluded in its evaluation, however, that this was not the case

With the U S court decision, and another decision in Canada overturning a ban on interprovincial trade in MMT, it can legally be used in unleaded gasoline in both the United States and Canada EPA's administrator has stated, however, that a definitive risk evaluation is not possible until more data are collected, and that use of MMT in unleaded gasoline in the United States ought to be delayed until such data are collected (Browner, 1996) In determining the advisability of MMT use, or the use of any fuel or fuel additive, in any particular country or

[5] 59 FR 42260 August 17 1994

The time required to phase out lead in gasoline has ranged from a few months (e g , Egypt) to more than 15 years (the United States)

regional setting an assessment of health risk ought to be taken into consideration

2 7 Lead Phaseout Strategies

Slow vs fast phaseout Different countries have taken different approaches to phasing out lead in gasoline, and have pursued very different schedules The time required to phase out lead has varied from periods of more than 15 years in the United States to a few months in Egypt In general, a slower phaseout schedule will reduce the costs of the lead phaseout to the refining industry, and give more time for any old cars that might suffer valve seat damage to retire from the fleet However, it also means that more people are exposed to high lead concentrations for a longer time, and thus suffer from the adverse effects of lead on their health (and in the case of children, their mental development) In addition, vehicle maintenance costs tend to be higher with leaded than with unleaded gasoline, so that continuing the production of leaded fuel will mean higher maintenance costs

Considering a range of scenarios Because the costs and benefits of rapid vs slow lead phaseout will vary from one country to another, implementers should consider a range of phaseout scenarios, including very rapid and less rapid reductions In the short term, the feasible reduction in lead use is likely to be limited by the refining capacity available It may take three to five years to design, finance, and upgrade or build the refinery process units required to produce high-octane unleaded blending components In the meantime, some of the octane shortfall may be recovered by importing oxygenates such as MTBE, high-octane hydrocarbon blendstocks, or unleaded gasoline

EPA recommends that lead phaseout be accomplished as quickly as possible There are two main reasons for this First lead poisoning is one of the most important preventable diseases associated with urbanization Although lead in gasoline represents only 2 2 percent of total global lead use it remains by far the single-largest source of lead exposure in urban areas Approximately 90 percent of all lead emissions into the atmosphere are due to the use of leaded gasoline Second and most important, some of the health effects associated with lead poisoning, such as lowered IQ in children, cannot be reversed no matter how high the future investment

The approach recommended here is first to reduce the lead content of leaded gasoline as quickly as possible, and then to eliminate leaded gasoline as quickly as possible thereafter

Managing the transition to unleaded gasoline Although it is sometimes possible to eliminate leaded gasoline overnight, more commonly some transition period is required Two approaches have been taken to managing this transition One approach has been to encourage refiners and vehicle owners to switch from leaded to unleaded fuel, without changing the lead content of leaded fuel This approach has been typical of Western Europe The second approach followed in the United States and Mexico, has been to reduce the lead content of the leaded gasoline as quickly as possible, while providing enough completely unleaded gasoline to meet the needs of vehicles equipped with catalytic converters This second approach (reducing the lead content of leaded fuel instead of shifting from leaded to completely unleaded fuel) has several advantages, and is recommended in most cases

- *Lower total lead emissions* As discussed in Section 2 2, the octane-improving effects of lead are not a linear function of lead concentration The first 0 1 g/

liter of lead additive gives the largest octane boost, with subsequent increases in lead concentration giving progressively smaller returns

- *Refining costs* Reducing the lead content in leaded gasoline reduces the difference in refining costs between leaded and unleaded gasolines This, in turn, makes it easier to adopt a policy taxing gasoline so as to set the pump price of unleaded gasoline lower than that of leaded gasoline This policy is considered important to minimizing the chances of misfueling catalyst-equipped cars with leaded gasoline

- *Improved public perception* Another advantage of this approach is in the area of public relations This is because no changes are required in consumer behavior, and the change in lead concentration is not visible at the gasoline pump Since only a tiny amount of lead is required to prevent valve seat recession even in extreme cases, a change in lead concentration even to very low levels is unlikely to worry the public For example, EPA's decision to limit lead to 0 1 g/gal (0 03 g/l) in 1986 reduced ambient lead concentrations by 90 percent, but was little noticed by the gasoline-buying public

Of course, all countries should move to eliminate leaded gasoline entirely, and as quickly possible This is most readily accomplished by leaving the change from leaded to unleaded for the end of the phase-out process, when there has been more opportunity to educate the public and when the elimination of most of the *economic* benefits from the use of lead will have reduced the motivation for vested interests to spread misinformation

An example of near- and longer-term lead phaseout Table 5 shows a simplified example of how octane requirements could be met while phasing out the use of lead additives The example assumes that the existing gasoline market comprises equal shares of 85 RON leaded regular and 93 RON leaded premium gasoline, produced in a mix of topping and hydroskimming refineries As the "existing situation" column shows, the regular gasoline is blended from a combination of straight-run naphtha and butane, with a "clear" RON (before the addition of lead) of 73 2 Adding 0 7 grams of lead per liter raises the octane rating by 12 numbers, to slightly more than 85 RON The leaded premium gasoline is blended from a combination of straight-run gasoline, reformate, and butane, with a clear RON of 83 6 Adding 0 7 grams of lead per liter raises the RON by 10 numbers, to 93 6 The difference of two octane numbers between the octane boost from lead in the premium gasoline, compared to that produced by the same amount of lead in the lower-octane regular gasoline, is due to the reduced lead susceptibility of aromatics and naphthenes in the reformate

This very simplified example shows the potential to reduce lead emissions substantially, even before new refinery process units can be brought on line

The second, near-term column shows how the total lead in gasoline might be reduced within a relatively short period In this example, the base regular gasoline is blended from the same components as before, but with the addition of 9 percent by volume of imported high-octane (97 RON) hydrocarbon components These could be either alkylate or aromatics, or a combination of both (although alkylate would be preferred in order to minimize benzene emissions), and increase the octane value of the clear gasoline by 2 3 numbers The resulting clear gasoline is then blended with 15 percent MTBE (contributing 7 1 octane numbers) The remaining shortfall of 2 5 octane numbers is made up by blending 0 1 gram of lead per liter, taking advantage of the non-linear relationship between lead and octane boost

In the hypothetical premium gasoline, the lead has been eliminated entirely, thus making it compatible with vehicles using catalytic converters This is achieved by upgrading the reformer catalyst and increasing reformer severity to produce reformate of 100 RON instead of 94 In addition, 6 percent of imported high-octane blendstock is substituted for straight-run gasoline, increasing the octane value by 1 5 number Finally, the gasoline is blended with 15 percent MTBE, adding 5 3 octane numbers

In the longer term, new refinery process units could be built to supply the additional octane required, thus eliminating the need to import MTBE and high-octane blendstocks, as well as the remaining lead in the regular gasoline The third column in Table 5 shows the result of adding more catalytic reforming capacity, together with isomerization and alkylation units

While highly simplified, this example shows the potential to reduce lead emissions substantially even in the relatively near term, before new refinery process units could be brought on-line The resulting costs for MTBE and high-octane blendstocks are likely to be significant As further discussed in Chapter 6, these costs should be weighed against the health and other benefits of reducing lead emissions more quickly

A simplified example of a cost calculation is given in Table 6 This calculation is based on the same hypothetical case as that above, and uses world market prices current as of September 1998 The estimated economic cost of gasoline is based on the spot-market price of 91 octane unleaded regular gasoline in September 1998 This price was US $0 385 per gallon ($0 102 per liter) at the refinery (Note that retail gasoline prices are much higher, due to the costs of distribution and marketing, and taxes These costs would not change with the change to unleaded gasoline, and are thus omitted from the calculation) The gasoline value was adjusted for differing octane qualities, using a marginal cost per octane-barrel of US $0 33 ($0 002 per octane-liter) This value reflects spot-market price differences for differing gasoline grades A single marginal cost per octane barrel oversimplifies the actual economics of refining, but serves for this simplified example

For the imported high-octane components, it was assumed that the cost would be US $0 004 per octane-liter (double that for domestic refining), reflecting both a scarcity premium and transportation costs This very conservative assumption would bring the cost of the 97 RON imported components to US $ 138 per liter The cost of MTBE assumed in the calculation is equal to the spot market price plus 10 percent for transportation and blending The cost of lead is given in the recent study by Abt (1996)

Table 5 Example Of Meeting Octane Requirements With Reduced Use Of Lead

	Blending Octane	Existing Situation	6 months (Near Term)	3 to 5 years (Long Term)
Regular Gasoline (85 RON)		**Blending Components**		
Straight run naphtha	71	90%	81%	35%
Cat cracked gasoline	92	0%	0%	15%
n Butane	93	10%	10%	10%
Reformate	94			35%
Isomerate	88			5%
Alkylate	97			
High octane imports	97		9%	
Total		100%	100%	100%
Base gasoline RON		73 2	75 5	85 3
Lead g/l		0 7	0 1	0
RON increase due to lead		12	2 5	0
MTBE blending		0%	15%	0%
Octane increase due to MTBE		0	7 1	0
Final RON		85 2	85 2	85 3
Premium Gasoline (93 RON)		**Blending Components**		
Straight run	71	45%	39%	10%
n Butane	93	10%	10%	5%
Reformate	94	45%		
Reformate	100		45%	50%
Isomerate	88			25%
Alkylate	97			10%
High octaine imports	97		6%	
Total		100%	100%	100%
Base gasoline RON		83 6	87 8	93 5
Lead g/l		0 7	0	0
RON increase due to lead		10	0	0
MTBE blending		0%	15%	0%
Octane increase due to MTBE			5 3	0
Final RON		93 6	93 1	93 5

Table 6 Costs Of Phasing Out Lead In Gasoline — Hypothetical Case

	1998 Prices	Contribution of Gasoline Cost		
		Existing	Near Term	Long Term
Regular Gasoline 85 RON				
Gasoline 73 RON $/liter	$0 066	$0 066	$0 056	
Gasoline 85 RON $/liter	$0 090			$0 090
MTBE $/liter	$0 183		$0 027	
TEL $/gram Pb	$0 021	$0 015	$0 002	
High octane imports $/liter	$0 138		$0 011	
Total Cost		$0 080	$0 096	$0 090
Increase US$/liter			$0 015	$0 009
Premium Gasoline 93 RON				
Gasoline 84 RON $/liter	$0 088	$0 088		
Gasoline 87 RON $/liter	$0 094		$0 080	
Gasoline 93 RON $/liter	$0 106			$0 106
MTBE $/liter	$0 183		$0 027	
TEL $/gram Pb	$0 021	$0 015		
High octane imports $/liter	$0 138		$0 007	
Total Cost		$0 102	$0 114	$0 106
Increase US$/liter			$0 012	$0 003

3. ASSESSING LEAD PHASEOUT IMPACTS ON THE VEHICLE FLEET

Using lead additives in gasoline has many effects on a vehicle's engine, in addition to its effects on fuel octane level Most of these effects are undesirable, including the corrosion of exhaust valve materials, the contamination of engine oil with corrosive acids, the fouling of spark plugs, and the corrosion of exhaust systems

Gasoline lead does have one desirable effect, however it serves as a lubricant between exhaust valves and their seats, helping to prevent excessive wear In the absence of lead, older-technology engines can suffer from the rapid wear of the exhaust valve seats when operated at high speed for long periods of time This phenomenon, known as *valve seat recession*, has been the subject of considerable misinformation and public concern, which in turn poses a serious obstacle to eliminating leaded gasoline in many countries However, detailed studies and extensive practical experience in a number of countries show that the potential problems due to valve seat recession have been highly exaggerated and that use of low-lead or unleaded gasoline will result in longer engine life and lower maintenance costs overall

Valve seat recession (where the exhaust valve seats of older engines that run without lead suffer rapid wear) is not as serious a problem as once thought Low-lead or unleaded gasoline produces longer engine life and lower maintenance costs for these and other engine types

This chapter first describes the reasons underlying EPA's finding that the maintenance costs for vehicles using unleaded gasoline are less than those for vehicles using leaded gasoline

This conclusion has been supported by actual experience in countries using unleaded gasoline In the United States, several studies covering thousands of vehicles found no maintenance problems that could be attributed to the effects of unleaded gasoline Likewise, Brazil has not experienced such problems as valve seat recession, which have been commonly attributed to the use of unleaded gasoline

Last, the chapter shows how to calculate the maintenance cost savings resulting from the use of low-lead and unleaded gasoline The results show that, for typical maintenance costs, using low-lead gasoline would result in savings of about US $550 over the life of a car, the total savings for unleaded fuel would be about $800

The Steps In Assessing Lead Phaseout Impacts On The Vehicle Fleet

1 Assess maintenance benefits of unleaded gasoline

To assess the benefits of reducing or eliminating lead in gasoline for the vehicle fleet implementers should quantify the frequency of occurrence and the costs of maintenance items such as spark plug changes, oil changes, valve repairs, valve seat repairs, and exhaust system replacements The savings in maintenance costs due to lead phaseout can then be estimated using the information provided in Section 3 4

2 Assess potential for valve seat damage

The implementer should also assess the potential for some engines to suffer valve seat damage

3 Assess potential valve seat protection strategies

Next implementers should assess the costs of potential valve seat protection strategies if these are indicated (See Section 3 1 1 for some ways to protect valve seats)

4 Evaluate net costs and savings for the vehicle fleet

The resulting net benefits or costs should then be calculated as functions of time for each of the lead phaseout strategies considered, in order to compare them with the other costs and benefits

3 1 Lead's Role In The Engine

During the 1960s and 1970s, many technical papers discussed the effects of lead additives and unleaded fuels on engines Weaver (1986) reviewed the literature through 1984, as well as a number of unpublished results of fleet experience using unleaded gasoline The results of his review were cited in the EPA's 1985 cost-benefit study of lead phaseout, and provided the technical basis for its conclusion that the vehicle maintenance savings would outweigh the costs The remainder of this section summarizes the results of that study

3 1 1 Valve Seat Recession

The exhaust valves and valve seats of modern gasoline engines operate at high temperatures and under great mechanical stresses When it closes, the valve strikes the seat with great force thousands of times per minute Under high-speed and high-power output conditions, small "warts" of iron oxide may form on the valve This results from segments of the valve seat welding to the valve upon impact, and then being torn loose when the valve opens When these "warts" repeatedly strike against the valve seat, it causes deformation, cracking, and flaking of the seat, while the presence of hard iron oxide particles being scrubbed across the valve face causes abrasive wear The resulting rapid wear of the valve seat can lead to a loss of compression and require major repairs to the engine in less than 10,000 km

The presence of lead deposits on the valve seat appears to prevent the initial adhesion and welding that leads to valve seat recession Only a small amount of lead is required to provide this protection 0 02 grams per liter has been found

to be effective in laboratory tests A similar protective effect is obtained from deposits of other elements such as manganese (from MMT), phosphorus, zinc, and calcium (from engine oil) Valve seat recession can also be prevented by heat-treating the valve seat area to harden it, or by using valve seat inserts made of hard material A hardness of approximately 30 on the Rockwell C scale is adequate to prevent valve seat recession

Nearly all gasoline engines and replacement cylinder heads now produced in the world have hardened valve seats, and thus are not subject to valve seat recession This applies generally to U S vehicles made after 1970, and European vehicles beginning in the early 1980s Some older engines still in service may have soft valve seats, however, and could potentially experience valve seat recession

Valve seat recession can occur in some older vehicles when they are subjected to prolonged high-speed operation, but the hardened valve seats manufactured after 1970 in the United States and the early 1980s in Europe protect against this problem

Although valve seat recession can readily be produced in the engine laboratory, practical experience and a number of specific studies have shown that it is very uncommon in actual use This is apparently because few gasoline vehicles (especially old ones) experience long periods of uninterrupted operation at high speeds and loads There appears to be a threshold effect — a certain period of high-speed operation is required to wear through the deposit layer on the valve seat before recession can begin Interrupting this period of high-speed operation with periods of lighter use may allow the deposit layer to re-form, prolonging engine life

McArragher et al (1993) reviewed a number of later studies and assessed the potential for valve seat recession due to lead phaseout in Europe Like the EPA study, McArragher and his colleagues concluded that valve seat recession was likely only where vulnerable engines were subject to prolonged high-speed operation They noted, however, that this was more likely in Europe, due to the smaller engines common there and the high speeds reached on autobahns and similar motorways They also concluded that a minimum of 0 05 g/liter of lead would provide complete protection to the most vulnerable engines, even under the most extreme conditions A potassium additive was found that gave complete valve seat protection at high concentrations and good protection at lower concentrations

The McArragher team projected the fraction of surviving cars in Europe with soft seat valves potentially vulnerable to recession This percentage was projected to drop from around 40 percent in 1990 to less than 20 percent by 1997 They pointed out as well that many of the "soft' seats were actually hard enough to be unlikely to suffer valve seat recession except under extreme conditions, so that the number of vehicles actually vulnerable to valve seat recession would be even less than what they projected

In the minority of vehicles that experience valve seat recession, the problem can be corrected and kept from recurring This is done either by replacing the cylinder head with a new one having hardened valve seats, or by machining out the valve seats in the old cylinder head and replacing them with hardened inserts The cost of this operation is about US $500 in the United States, and is expected to be considerably less in most developing countries, which have lower labor costs

In the minority of vehicles that experience valve seat recession, the problem can be corrected and kept from recurring

3 1 2 Valve Corrosion And Guttering

Although lead deposits protect valve seats from accelerated wear, they can reduce the life of exhaust valves At high temperatures, the lead oxide layer on the seat can attack the protective oxide layer on the valve, causing corrosion This weakens the metal and can eventually cause "guttering' — the formation of a channel on the valve surface Hot combustion gases escaping through this channel rapidly enlarge it, causing the valve to fail A similar effect can occur when lead deposits build up too thickly on the valve seat When these deposits flake, they can create a path for hot gases past the valve face

Studies carried out for EPA found that using unleaded gasoline greatly reduces the number of valve-related repairs needed, more than offsetting any increase in repairs due to valve seat recession

Measures to prevent lead deposit buildup were designed into engines intended for use with leaded gasoline These include the use of valve rotators, greater spring loadings, and steeper valve seat angles U S experience and a number of fleet studies have shown that the use of unleaded gasoline greatly reduces the number of valve-related repairs needed, more than offsetting any increase in repairs due to valve seat recession

3 1 3 Oil Changes And Engine Life

Before unleaded gasoline was used, engine rusting was an important and widely studied problem To prevent the excess buildup of lead deposits, leaded gasoline includes ethylene dichloride and ethylene dibromide to serve as "scavengers " The bromine and chlorine atoms introduced to the combustion chamber combine with the lead, forming compounds that are more easily removed Unfortunately, chlorine and bromine also form corrosive hydrochloric and hydrobromic acids, respectively Some of these acids get into the engine oil, where they will readily combine with any water that may be present to cause internal corrosion and rust

To delay this phenomenon, engine oils contain special basic additives that react with the acids to neutralize them Since the reaction consumes the additives, the oil must be changed at intervals to supply fresh additive Reducing the lead content of the fuel reduces the corrosive burden on the lubricating oil, and allows oil change intervals to be extended

Unleaded gasoline can extend engine life by reducing engine rust and the corrosive wear of piston rings and cylinder walls

The lead scavengers used with leaded gasoline also contribute to corrosive wear inside the cylinder, especially wear of the piston rings For example, taxi studies in the 1970s showed that corrosive wear of the piston rings and cylinder walls was 70 to 150 percent greater with leaded than unleaded fuel (Carey et al , 1978, Gergel and Sheahan, 1976) Switching to unleaded gasoline can thus be expected to extend engine life significantly

3 1 4 Spark Plug Fouling And Replacement Frequency

Cars using leaded gasoline need spark plug replacements twice as often as those running on unleaded gasoline

Lead deposits can foul spark plugs and contribute to chemical corrosion The spark plugs used with leaded gasoline can suffer serious corrosion and require replacement generally within 20,000 km, while those used with unleaded fuel can go 40,000 km or more without replacement As a result, the costs for spark plug replacement and servicing are much lower for vehicles using unleaded fuel A study in Canada (Hickling Partners, 1981) concluded that spark plug maintenance costs would be reduced by about 49 percent with unleaded fuel

3 1 5 Exhaust System Corrosion

Vehicle exhaust systems can corrode from both the inside and the outside From the inside, the primary corrosion process is cold corrosion, which occurs when water condenses inside the exhaust system Where leaded gasoline is used, this water is contaminated with hydrochloric and hydrobromic acids Exhaust gas condensates in engines burning leaded gasoline typically have pH values in the range of 2 2 to 2 6, which is highly corrosive The pH values of unleaded gasoline condensates are around 3 5 to 4 2

Fleet tests comparing leaded and unleaded fuel show that vehicles using leaded gasoline require four to ten times as many replacements of exhaust system components In warm climates, where road salt is not used, exhaust systems used with unleaded gasoline can be expected to last the life of the vehicle, while those used with leaded fuel require replacement about every 50,000 km

Vehicles run on leaded gasoline need four to ten times as many replacements of exhaust system components as those running on unleaded gasoline

3 2 U S Fleet Experience

As the preceding review has shown, the use of unleaded gasoline offers many advantages in terms of vehicle life and maintenance costs However, these advantages are counterbalanced by a potential major disadvantage in engines not equipped with hardened valve seats valve seat recession For this reason, proposals to eliminate leaded gasoline have caused public concern

The likelihood that valve seat recession will occur, and the consequences if it does occur, have often been exaggerated The great body of in-use experience with unleaded gasoline, including its widespread use in vehicles without hardened valve seats, shows that the likelihood of valve seat damage due to unleaded fuel use is very small, while the overall savings in maintenance costs are generally substantial

A number of controlled fleet studies were carried out in the 1960s to compare maintenance costs of vehicles running on leaded and unleaded gasoline A study financed by Ethyl Corporation, a major lead additive supplier, showed that over a 5-year period, 4 out of 64 vehicles using unleaded gasoline required cylinder head replacement (1 vehicle required 2 replacements), compared to 1 out of 64 vehicles using leaded gasoline (Wintringham et al , 1972) However, the unleaded gasoline group required only 6 valve repairs, compared to 16 among the vehicles using leaded gasoline Other studies conducted in the same time period showed that overall maintenance costs were lower with unleaded than leaded gasoline

Engines in heavy-duty gasoline vehicles are more likely to undergo severe service than those in passenger cars, and thus might be expected to show an increased incidence of valve seat recession This has not been the case, however A major test conducted by the U S Army involved switching all of the vehicle fleets of three army posts to unleaded gasoline This included some 7,600 vehicles (some dating from the 1940s), as well as many items of power equipment The results of this test were definitively negative *no* untoward maintenance problems were experienced that could be attributed to the effects of unleaded gasoline The U S Army subsequently converted its entire establishment to unleaded gasoline without ill effects

Analyses of 42 months of maintenance data for heavy-duty gasoline trucks used by the U S Postal Service (during which the trucks averaged 280,000 kilometers of service) showed that 4 2 percent of the trucks suffered valve failures and 1 2 percent suffered valve seat failures during that period (Weaver et al , 1986) The valve seat failure rate was comparable to that expected when using leaded gasoline, while the valve failure rate was significantly lower Experience in numerous public utility truck fleets during the 1970s also showed no increase in valve- or valve seat-related problems with the use of unleaded fuel

3 3 Worldwide In-Use Experience

In recent years, the use of leaded gasoline has been eliminated in a number of developing countries, including Brazil, Colombia, Egypt, Thailand, Guatemala, Costa Rica and Argentina Increased seat valve problems have not been observed in any of these countries

The case of Brazil is especially important, given the size of its vehicle fleet With the inclusion of 22 percent ethanol by volume in gasoline as part of the Proalcool program, lead additives were no longer needed, and Brazil began eliminating gasoline lead in 1979 It completed its lead phase-out in 1991 (Faiz et al , 1996) Despite the presence of large numbers of vehicles with soft valve seats, no significant or widespread problems have been experienced with valve seat recession

3 4 Monetizing Maintenance Costs And Savings

An evaluation of the costs and benefits of phasing out lead in gasoline should include an estimate of the maintenance savings to vehicle owners Table 7 shows a hypothetical example of such a calculation The assumptions used in this example are outlined below

Spark plug life Here, the assumptions were that

- The vehicle's useful life is 200,000 kilometers
- The average interval between spark plug changes with leaded gasoline is 15,000 kilometers (if available, actual data on the average spark plug change interval in the area under consideration should be substituted instead)
- The average spark plug change interval will be doubled with unleaded gasoline, and extended by two-thirds using low-lead fuel (0 1 gram of lead per liter)

The lifetime costs are then the cost of a single spark plug change (estimated at US $20) multiplied by the number of spark plug change intervals over the vehicle s life, minus one (since the vehicle comes equipped with one set of plugs)

Engine overhauls The number of engine overhauls required during the vehicle's lifetime was estimated at 1 0 with leaded gasoline, and 0 8 with low-lead or unleaded fuel This is based on the much lower rates of piston ring wear, rusting, and corrosion with low- and zero-lead fuel

Exhaust system replacements The numbers of exhaust system replacements and valve repairs are based on the data of Wintringham et al , extrapolated to the full engine life The number of exhaust system replacements with low-lead gasoline is assumed to be similar to that with high-lead fuel, as the critical factor is considered to be the presence of acids formed by the lead scavengers in the exhaust pipe, and not the amount of the acid present

Cylinder head replacements The number of cylinder head replacements is also based on the data of Wintringham et al , and reflects a pessimistic assumption that 20 percent of the vehicle fleet will suffer valve seat recession at some point during their useful lives when using unleaded gasoline This is considerably higher than the observed rate of occurrence of this problem in the countries that have already phased out leaded gasoline

Net maintenance savings Adding up the total maintenance costs and savings in this hypothetical case suggests that the use of low-lead gasoline would result in savings of about US $557 over the life of a car, equivalent to about $0 033 per liter of gasoline used For unleaded fuel, total savings would be $783, or about $0 047 per liter These costs can be compared directly to the additional costs of producing the low-lead and unleaded fuels in a cost-benefit evaluation

Table 7 Hypothetical Maintenance Cost Savings With Low-Lead And Unleaded Gasoline

	Gasoline Type		
Maintenance Item	**High Lead**	**Low Lead**	**Unleaded**
Vehicle life (km)	200 000	200 000	200 000
Spark Plugs			
Change interval	15 000	25 000	30 000
Change cost	$20	$20	$20
Lifetime cost	$247	$140	$113
Oil Change			
Change interval	4 000	6 000	8 000
Change cost	$12	$12	$12
Lifetime cost	$588	$388	$288
Engine Overhaul			
Total overhauls	1 0	0 8	0 8
Overhaul cost	$500	$500	$500
Lifetime cost	$500	$400	$400
Exhaust System Replacement			
Total replacements	3	3	1
Replacement cost	$80	$80	$80
Lifetime cost	$240	$240	$80
Valve Repairs			
Total number	0 5	0 2	0 2
Cost/repair	$500	$500	$500
Lifetime cost	$250	$100	$100
Cylinder Head Replacements			
Total number	0 1	0 1	0 3
Cost/repair	$300	$300	$300
Lifetime cost	$30	$30	$90
Total lifetime cost	$1 855	$1 298	$1 071
Saving compared to leaded		$557	$783
Total fuel used (l)	16 667	16 667	16 667
Saving per liter		$0 033	$0 047

4. ASSESSING LEAD PHASEOUT EFFECTS ON VEHICLE EMISSIONS AND AIR QUALITY

Phasing out lead will entail changes in gasoline composition, and these changes will affect the emissions of lead and other pollutants from gasoline-powered vehicles For instance, increasing the aromatic hydrocarbon content of gasoline may increase emissions of benzene and other aromatics in exhaust and evaporative emissions Changes in gasoline composition may also affect the photochemical reactivity of volatile organic compound (VOC) emissions, and thus affect the formation of ground-level ozone (photochemical smog)

The changes in gasoline composition resulting from phasing out lead will affect the emissions of lead and other pollutants from gasoline-powered vehicles

In a number of cases, public concerns over these secondary effects have delayed lead phaseout programs It is thus important that the potential secondary effects of lead phaseout be assessed and quantified as part of the phaseout plan, and that – where necessary – measures be taken to mitigate any adverse impacts Such measures might include setting limits on or taxing the benzene, aromatic, and/or olefin content of fuels, and limiting vapor pressure to minimize evaporative emissions

Lead phaseout also provides an opportunity for a more general review of emission control policies related to vehicles and fuels, such as the adoption of catalytic converters and/or evaporative emission controls, and limits on gasoline sulfur content To the extent that such policies require changes in either the composition or the market shares of different fuels, they will affect investment plans in the refining and fuel distribution sectors To avoid waste and confusion, it is best that they be adopted as an integrated package with the lead phaseout policy, rather than one at a time

This chapter first examines the effects of vehicle emission control technology on CO, HC, and NO_x emissions It then discusses the emission standards in effect in North America and Europe, which implementers should consider incorporating in their own countries' lead phaseout strategies

Next, the studies examining the differences in emissions between leaded and unleaded gasoline in vehicles without catalytic converters are examined The chapter concludes with a discussion of the rationale for considering the inclusion of regulations that reduce sulfur, fuel volatility, olefins, aromatics and benzene when establishing a lead phaseout program

4 1 Emission Control Technologies For Gasoline Vehicles

In addition to lead emissions from leaded gasoline, gasoline engines in cars, light-duty trucks, and motorcycles are responsible for more than 90 percent of the carbon monoxide (CO) emissions and substantial fractions of the emissions of unburned hydrocarbons (HC) and oxides of nitrogen (NO_x) in most large cities Carbon monoxide is a poisonous gas, and exposure to it may increase the risk of heart attack in persons with existing cardiovascular disease HC emissions include cancer-causing organic chemicals such as benzene and 1,3 butadiene HC

The Steps In Assessing Lead Phaseout Effects On Vehicle Emissions And Air Quality

1 Assess gasoline composition effects on emissions and air quality

Implementers should assess and quantify the potential secondary effects of lead phaseout on emissions and air quality

2 Assess the need for policies affecting gasoline composition

Where necessary, implementers should specify measures to mitigate any adverse impacts resulting from changes in gasoline composition Such measures might include setting limits on or taxing the benzene, aromatic, and/or olefin content of fuels, and limiting vapor pressure to minimize evaporative emissions

3 Consider vehicle emission control policy

Implementers should conduct a general review of emission control policies for vehicles and fuels, such as the adoption of catalytic converters and/or evaporative emission controls, and limits on gasoline sulfur content

and NO_x also react in the presence of sunlight to form ozone and other photochemical oxidants, the main ingredients in photochemical smog Ozone is an irritant gas with effects that include increased risk of asthma attacks, respiratory illness, and death Most large cities worldwide exhibit unhealthy levels of carbon monoxide, ozone, or both

Modern technologies can reduce CO, HC, and NO_x emissions from new gasoline vehicles by more than 90 percent compared to those of vehicles without emission controls

With modern emission control technology, emissions of CO, HC, and NO_x from new gasoline vehicles can be reduced by more than 90 percent compared to the levels typical for vehicles without emission controls The emission control system used to achieve this reduction has three main components a three-way catalytic converter, an electronic fuel injection system, and an electronic engine control system incorporating a lambda sensor (air-fuel ratio sensor) for feedback control of the air-fuel ratio

Both catalytic converters and lambda sensors depend on catalytic reactions, and both require the use of unleaded gasoline Otherwise, lead compounds in the exhaust will rapidly coat the active surface of the catalyst, blocking contact between the catalyst and the exhaust gas This was the original reason for mandating the sale of unleaded gasoline in the United States in 1975, and subsequently in other countries At that time, the health dangers of lead aerosol contamination were not as well understood as they are today

The benefits of phasing out lead in gasoline do not depend on whether catalyst-forcing emission standards are adopted or not The decision to phase out lead in gasoline should not be delayed while this question is debated

The decision to phase out lead in gasoline is fully justifiable on health grounds, whether or not a government also chooses to adopt emission standards for HC, CO and NO_x emissions that require the use of catalytic converters Once the decision is taken to phase out lead, however, it removes a major roadblock to adopting such standards The decision on whether to adopt strict emission limits for HC, CO, and NO_x can then be considered on its own merits, taking into account both the costs and the benefits of such controls Proper evaluation of the costs, benefits, and feasible schedule for implementing vehicle emission controls can be time consuming It is important to emphasize, therefore, that the benefits

of phasing out lead in gasoline do not depend on whether catalyst-forcing emission standards are adopted or not, and the decision to phase out lead in gasoline should not be delayed while this question is debated

4 2 Systems Of Emission Standards

If a nation or other jurisdiction does decide to require gasoline vehicles to meet emission standards, it will have to face the question of what emission standards to adopt It is very costly and time consuming for vehicle manufacturers to develop unique emission control systems Therefore, considerations of economies of scale, the lead-time required, the cost to vehicle manufacturers to develop unique emission control systems, and the cost to governments of establishing and enforcing unique standards all argue for adopting one of the sets of international emission standards and test procedures already in wide use

The main international systems of vehicle emission standards and test procedures are those of North America and Europe North American emission standards and test procedures were originally adopted by the United States, which was the first country to set emission standards for vehicles Under the North American Free Trade Agreement, these standards have also been adopted by Canada and Mexico Other countries and jurisdictions that have adopted U S standards and/or test procedures include Argentina, Brazil, Chile, Taiwan, Hong Kong, Australia, the Republic of Korea, and Singapore (for motorcycles only) The standards and test procedures established by the United Nations Economic Commission for Europe are used in the European Union, a number of former Eastern bloc countries, and some Asian nations Japan has also established a set of emission standards and testing procedures that have been adopted by some East Asian countries as supplementary standards

Economies of scale, the costs to governments and vehicle manufacturers, and other factors argue for adopting a set of international emission standards and test procedures, rather than developing standards and test procedures that are unique to one country

U S and European emission standards and test procedures are described by Faiz et al (1996) in a publication by the World Bank Updated information as of mid-1998 was included in another report prepared under contract to the U S Agency for International Development (Chan and Weaver, 1998) Generally, gasoline passenger cars and light-duty trucks in Europe and North America use very similar technologies, and are certified to similar emission levels Vehicles meeting each set of standards (and sometimes both) are readily available on the world market

With this in mind, countries may wish to maximize their access to international automotive markets by allowing vehicles to comply with either North American or European emission standards Thus, vehicles could be allowed if they were certified either to the current European emission standards for passenger cars and light-commercial vehicles (contained in EU directive number 96/69/EC) or to U S Tier 1 emission standards as defined in the U S Code of Federal Regulations (40 CFR 86, Part B) The cost of meeting either of these sets of emission standards is estimated to be on the order of US $1,000 per vehicle compared to a vehicle without emission controls This cost would be partly offset by an improvement in fuel economy of approximately 10 percent due to the use of electronic fuel injection with electronic management of air-fuel ratio and spark timing

The incremental cost of meeting international emission standards can be partly offset by improvements in fuel economy from electronic fuel injection with electronic management

Incorporating emission control technologies and new-vehicle emission standards into vehicle production is a necessary, but not a sufficient, condition for achiev-

ing low emissions Measures are also required to ensure the durability and reliability of emission controls throughout the vehicle s lifetime Low vehicle emissions at the time of production do little good if low emissions are not maintained in service To ensure that vehicle emission control systems are durable and reliable, countries such as the United States have programs to test vehicles in service, and recall those that do not meet emission standards Vehicle emission warranty requirements have also been adopted to protect consumers It is recommended that countries seek the advice of specialists in this field to aid them in designing effective and cost-effective emission control programs The International Activities Branch of the U S EPAs Office of Mobile Sources, located in Ann Arbor, Michigan, USA, may be able to offer advice in this area

4 3 Effect Of Leaded Vs Unleaded Gasoline

A number of studies examined the differences in emissions between leaded and unleaded gasoline in vehicles without catalytic converters Existing studies were summarized by the Coordinating Research Council (1970) and by Weaver (1986) The Council's summary found that stabilized HC emissions were reduced by 5 to 17 percent using unleaded gasoline compared to leaded fuel in consumer-type driving tests and by an even larger fraction in accelerated mileage accumulation schedules

Studies have found that using unleaded gasoline reduces hydrocarbon emissions by 5 to 17 percent over leaded fuel

Weaver (1986) describes the reason for these differences With leaded gasoline, lead deposits in the combustion chamber develop over time These take longer to develop with low-lead gasoline, but eventually build up to the same level The unburned fuel-air mixture trapped in this deposit layer does not burn, and later contributes to HC emissions when it is swept into the exhaust along with the burned charge With unleaded fuel deposits consist of carbon rather than lead, and are much more variable A period of high-load operation can reduce deposit levels considerably, and overall deposit levels are lower, on average These lower deposit levels result in lower hydrocarbon emissions

The presence of tetra-ethyl lead acts as a combustion inhibitor, and this may also contribute to increasing hydrocarbon emissions For example, in studies by the Instituto Mexicano del Petroleo (1994), the average of 28 vehicles tested in back-to-back tests on leaded, low-lead, and unleaded gasoline showed lower HC emissions as gasoline lead content was reduced (Table 8) Benzene and 1,3 butadiene emissions using low-lead and unleaded fuel were less than with leaded gasoline, despite slightly higher benzene and aromatic content in the unleaded fuel Tests by CSIRO in Australia (Duffy et al , 1998) also showed that emissions of benzene and 1,3 butadiene were reduced using unleaded gasoline (Table 9)

In actual consumer use, the difference in HC emissions between vehicles using leaded and unleaded fuel is likely to be much greater than in these controlled studies This is due to the effect of lead on spark plug replacement requirements All of the controlled studies included routine maintenance, which would have included timely spark plug changes In the real world, however, spark plug replacement is often delayed until misfire develops Since spark plugs require changing at much shorter intervals when leaded gasoline is used, vehicles using leaded gasoline are more likely to be operating with one or more cylinders misfiring due to fouled plugs The increase in HC emissions due to misfire is very large compared to the typical emissions from properly functioning vehicles

Table 8 Comparison Of Pollutant Emissions Using Leaded, Low-Lead, And Unleaded Gasoline In Vehicles Without Catalytic Converters

	Baseline	Ref Nova	Nova A
RON	81 7	81 1	81 5
MON		77 2	77 3
Composition			
Paraffins	57 3%	56 4%	54 4%
Olefins	10 0%	7 9%	8 8%
Naphthenes	10 2%	11 4%	11 4%
Aromatics	18 1%	17 3%	18 4%
Benzene	1 4%	1 3%	1 3%
MTBE	5 0%	7 0%	7 0%
TEL g/l	0 37	0 19	0 0
Emissions (g/km)			
CO	31 7	30 4	30 0
HC	2 95	2 9	2 8
NOx	1 50	1 53	1 52
Toxic Air Contaminants (mg/km)			
1 3 Butadiene	87 56	85 45	81 50
Benzene	82 61	76 4	79 7
Formaldehyde	78 72	85 1	83 0

Source Instituto Mexicano de Petroleo (1994)

Table 9 Toxic Air Contaminant Emissions Using Leaded And Unleaded Gasoline

	Leaded	Unleaded
RON	91 3	96
Composition		
Paraffins + naphthenes	43 7%	45 0%
Olefins	5 2%	6 8%
Aromatics	42 8%	40 5%
Benzene	5 7%	5 0%
TEL g/l	0 37	0 0
Toxic Air Contaminants (mg/km)		
1 3 Butadiene	15 5	14 00
Benzene	146 6	122 8

4 4 Effect Of Gasoline Properties And Composition on Emissions

In establishing programs to phase out lead in gasoline, implementers may also want to consider the desirability of other regulations on gasoline composition and properties The potential reduction in HC and CO emissions due to the inclusion of oxygenated compounds such as MTBE and ethanol was discussed in Section 2 5 Other gasoline properties that may be of interest for pollution reduction purposes include its sulfur content, the content of benzene and other aromatic hydrocarbons, olefin content, and volatility, as measured by Reid vapor pressure

When establishing lead phaseout programs, implementers should consider developing other regulations on gasoline composition and properties

4 4 1 Sulfur

Sulfur in gasoline is undesirable for several reasons The most important of these is that, in vehicles with catalytic converters, sulfur binds to the precious metal catalyst under rich conditions, temporarily poisoning it Although this poisoning is reversible, the efficiency of the catalyst is reduced while operating on high-sulfur fuel A 1981 study by General Motors (Furey and Monroe, 1981) showed emissions reductions of 16 2 percent for HC, 13 0 percent for CO, and 13 9 percent for NO_x with aged catalysts in going from fuel containing 0 09 percent sulfur to 0 01 percent An even larger percentage reduction was seen in vehicles with relatively new catalysts

Similar results have been reported from modern fuel-injected vehicles with three-way catalysts, tested as part of the Auto/Oil Cooperative Study in the United States (1992) This study showed that reducing fuel sulfur content can contribute directly to reductions in mass emissions (HC, CO, and NO_x), toxic emissions (benzene 1,3-butadiene, formaldehyde, and acetaldehyde), and potential ozone formation The Auto/Oil sulfur reduction study used test fuels with nominal fuel sulfur levels of 50, 150, 250, 350, and 450 ppm in 10 late-model vehicles Reductions in HC NMHC, CO, and NO_x were 18, 17, 19, and 8 percent, respectively, when fuel sulfur level was dropped from 450 ppm to 50 ppm Reducing the fuel sulfur level also reduced benzene emissions by 21 percent and acetaldehyde emissions by 35 percent Formaldehyde emissions were *increased* by 45 percent, while 1,3-butadiene changes were insignificant

In addition to its effects on catalyst efficiency, sulfur in gasoline contributes directly to SO_2, sulfate, and H_2S emissions, and indirectly to the formation of sulfate particles in the atmosphere These particles are a significant contributor to ambient concentrations of fine particulate matter (PM2 5), which has recently been shown to have strong links to human health and mortality Under lean conditions, fuel sulfur forms particulate sulfates and sulfuric acid in catalytic converters Under rich conditions, hydrogen sulfide is formed by the reduction of SO_2 and sulfates stored on the catalyst substrate The strong offensive odor of H_2S in the exhaust contributes to a public perception that catalysts "don t work," and may lead to increased tampering with emission controls

4 4 2 Volatility

Fuel volatility, as measured by Reid vapor pressure (RVP), has a marked effect on evaporative emissions from gasoline vehicles, both with and without evaporative emission controls In tests performed on European vehicles without evaporative emission controls it was found that increasing the fuel RVP from 62 to 82 kilopascals (kPa) roughly doubled evaporative emissions (McArragher et al , 1988) The percentage effect is even greater in controlled vehicles In going from 62 to 81 kPa RVP fuel, average diurnal emissions in vehicles with evaporative controls increased by more than 5 times, and average hot-soak emissions by 25-100 percent (U S EPA, 1987) The large increase in diurnal emissions from controlled vehicles is due to saturation of the charcoal canister, which allows subsequent vapors to escape to the air Vehicle refueling emissions are also strongly affected by fuel volatility In a comparative test on the same vehicles (Braddock, 1988), fuel with 79 kPa RVP produced 30 percent greater refueling emissions than gasoline with 64 kPa RVP (1 45 vs 1 89 g/litre dispensed)

In response to data such as these, EPA has established nationwide summertime RVP limits for gasoline These limits are 7 8 pounds per square inch (PSI) (4 kPa) in warm-climate areas and 9 0 PSI (62 kPa) in cooler regions Still lower RVP levels will be required in "reformulated' gasoline sold in areas with serious air pollution problems

An important advantage of gasoline volatility controls is that they can affect emissions from vehicles already produced and in use, and from the gasoline distribution system Unlike new-vehicle emissions standards, it is not necessary to wait for the fleet to turn over before they take effect The emissions benefits and cost-effectiveness of lower volatility are greatest where few of the vehicles in use are equipped with evaporative controls Even where evaporative controls are in common use, as in the United States, the control of volatility may still be beneficial to prevent in-use volatility levels from exceeding those for which the controls were designed

An important advantage of gasoline volatility controls is that they can affect emissions from vehicles that are already in use and from the gasoline distribution system

In its analysis of the RVP regulation, EPA (1987) estimated that the long-term refining costs of meeting a 62 kPa RVP limit throughout the United States would be approximately US $0 0038 per liter, assuming crude oil at $20 per barrel These costs were largely offset by credits for improved fuel economy and reduced fuel loss through evaporation, so that the net cost to the consumer was estimated at only $0 0012 per liter

Gasoline volatility reductions are limited by the need to maintain adequate fuel volatility for good vaporization under cold conditions Otherwise, engines will be difficult to start Volatility reductions below about 58 kPa have been shown to impair cold starting and driveability, and increase exhaust VOC emissions somewhat, especially at lower temperatures For this reason, volatility limits are normally restricted to the warm months, in which evaporative emissions are most significant The range of ambient temperatures encountered must also be considered in setting gasoline volatility limits

4 4 3 Olefins

Olefins, or alkenes, are a class of hydrocarbons that have one or more double bonds in their carbon structure Examples include ethylene, propylene, butene, and 1,3 butadiene – a powerful carcinogen Olefins in gasoline are usually created by the refining process of cracking naphthas or other petroleum fractions at high temperatures Olefins are also created by partial combustion of paraffinic hydrocarbons in the engine Compared to paraffins, olefins have extremely high ozone reactivity Because of their higher carbon content, they also have a slightly higher flame temperature than paraffins, and thus NO_x emissions may be increased somewhat It has been shown (Duffy et al , 1998) that the evaporation of 1,3 butadiene in gasoline contributes to ambient levels of this toxic air contaminant

The Auto/Oil study in the United States examined the impacts of reducing olefins in gasoline from 20 percent to 5 percent by volume (Hochhauser and others, 1991) The results show that while there tends to be a slight reduction in NO_x emissions from both current and older catalyst-equipped vehicles, VOC emissions tend to rise in both vehicle classes This was ascribed to the fact that a reduction in olefin content implies an increase in the paraffins The olefins react much more readily in a catalytic converter than do paraffins Increasing the paraffin content of the fuel therefore tends to reduce the overall VOC efficiency

of the catalytic converter The result of this change is higher paraffinic VOC emissions (which have substantially reduced reactivity in comparison to olefinic VOC emissions) and an associated reduction in vehicle exhaust reactivity

4 4 4 Aromatics And Benzene

Aromatic hydrocarbons are hydrocarbons that contain one or more benzene rings in their molecular structure In order to meet octane specifications, unleaded gasoline normally contains about 30-50 percent aromatic hydrocarbons Aromatics, because of their high carbon content, have slightly higher flame temperatures than paraffins, and are therefore thought to contribute to higher engine-out NO_x emissions Aromatics in the engine exhaust also raise the reactivity of the exhaust VOC because of the high reactivity of the alkyl aromatic species such as xylenes and alkyl benzenes Reducing the content of aromatic hydrocarbons in gasoline has been shown to reduce NO_x emissions, exhaust reactivity, and benzene emissions

An EPA study of toxic air contaminant emissions from mobile sources (EPA, 1993) gives a regression equation relating the fraction of benzene in the exhaust hydrocarbons to the benzene and aromatic content of the fuel For vehicles without catalytic converters, this fraction is given as

Benzene as % of total HC =
0 86 (vol % benzene) + 0 12 x (vol % aromatics) – 1 16

It is recommended that appropriate limits on the benzene and aromatic content of gasoline be adopted at the same time as the lead phasedown program

Evaporative and exhaust emissions of benzene are of significant public concern because benzene is a probable (albeit fairly weak) human carcinogen In a number of cases, exaggerated concerns of supposed increases in benzene emissions due to lead phaseout have been allowed to delay lead phaseout programs As Chapter 5 will demonstrate, the risks of even a very large increase in vehicular benzene emissions would be much less than the risks from lead Even the relatively small risks due to benzene may be worth mitigating, however, if only to reduce public anxiety and potential delays in the lead phaseout program Implementers may thus wish to consider establishing limits on both the benzene and total aromatic concentrations in gasoline

As discussed in Chapter 2, increasing the aromatic content of gasoline by catalytic reforming is one of the most important octane-enhancing processes in the refinery With advance planning, however, the increase in aromatic content due to lead phaseout can be minimized by emphasizing other octane-enhancing processes such as isomerization, alkylation, and blending of ethers In addition, the benzene content of the aromatic fraction can be reduced considerably by using special reformer catalysts tailored to produce other aromatics, and by processes that either remove the benzene for sale as a petrochemical or chemically destroy it by converting it to non-toxic compounds such as cyclohexane In order to minimize the cost impact on refiners, it is important that these considerations be taken into account at the time the refinery is upgraded to increase its octane capacity Thus, it is recommended that appropriate limits on the benzene and aromatic content of gasoline be adopted at the same time as the lead phasedown program

5. ASSESSING THE HEALTH BENEFITS OF LEAD PHASEOUT

Reducing or eliminating lead aerosol emissions through the use of unleaded gasoline can be expected to decrease lead concentrations in ambient air, dust, and other media This, in turn, will lessen human exposure to lead and the resulting adverse health effects

> This chapter presents data and a methodology for estimating the reduction in the average lead concentrations in human blood to be expected as a result of reducing or eliminating lead in gasoline
>
> Given this information, dose-response relationships derived from epidemiological data can be used to estimate the change in the incidence of high blood pressure, cardiovascular illness, and other health outcomes due to a given lead phaseout scenario Examples of these calculations are also presented in this chapter Finally, this chapter presents an approach for calculating the monetary value attributable to these benefits

In comparing the costs of reducing lead in gasoline with the resulting health benefits, it is often useful to express the health benefits in monetary terms The value to society of preventing a case of lead-related illness or premature death can be estimated based on treatment costs, lost productivity, and people's willingness to pay to reduce the risk of such consequences as premature death This chapter presents the bases for developing such estimates

The Steps In Assessing The Health Benefits Of Lead Phaseout

1 Estimate the air quality impact of lead and lead alternatives

To assess the health benefits of reducing or eliminating lead emissions the implementer should estimate how the distribution of lead concentrations in ambient air and in human blood will change in response to changes in gasoline lead concentrations To relieve public concerns about these issues, the implementer should also estimate the effect of the resulting changes in gasoline composition on emissions of toxic air contaminants such as benzene and 1,3 butadiene

2 Conduct a risk assessment for lead and lead alternatives

Given the estimated change in lead concentrations, coefficients derived from epidemiological studies of health outcomes as functions of blood lead concentration can be used to estimate the change in the risks of hypertension, impacts on children's health, cardiovascular illness, neurodevelopmental problems, and premature death due to a given reduction in lead emissions Similarly, published factors on unit risk can be used to estimate the potential change in cancer incidence due to changes in toxic air contaminant emissions

3 Assess the public health benefits of phasing out lead

The change in individual risk is multiplied by the population affected to give the total public health impacts of a given lead phaseout scenario

4 Conduct an economic valuation of public health benefits

In comparing the health benefits with the costs of reducing lead in gasoline, it is often useful to express the health benefits in monetary terms The value to society of preventing a case of lead-related illness or premature death can be estimated based on treatment costs, lost productivity, and people's willingness to pay to reduce the risk of premature death and other adverse consequences

5 1 Emissions Vs Ambient Concentrations

Ambient lead concentrations resulting from lead emissions in a given area such as a city are proportional to the quantity of leaded gasoline consumed in that area The resulting ambient lead concentrations will depend on the

- Quantity of leaded gasoline consumed
- Proximity of the particular monitoring site to heavy concentrations of road traffic
- Local meteorological conditions, which will determine the rate and extent of dispersion of the lead aerosol

Table 10 compares the estimated lead emissions for seven of the world's megacities with their average lead concentrations As this figure shows, the ratio of average lead concentrations to emissions is remarkably constant, averaging about 0 002 µg/m³ per ton of lead emitted in the urban area per year Surprisingly, this ratio does not appear to be much affected by variations in the size of the urban area, possibly because (except for London) heavy traffic concentrations and lead monitoring sites may tend to be concentrated in a much smaller region

Table 10 Lead Emissions Vs Ambient Concentration For A Selection Of World Megacities

City	Date	Lead Emissions (tons/year)	Avg Lead Conc (µg/m³)	Ratio
Mexico City	1988	1400	2 8	0 0020
	1993	210	0 6	0 0029
Bangkok	1990	598	1 245	0 0021
	1992	182	0 44	0 0024
	1993	160	0 33	0 0021
	1994	110	0 185	0 0017
	1995	75	0 16	0 0021
	1996	25	0 08	0 0032
Delhi		600	0 52	0 0009
Cairo		1200	2 5	0 0021
London		525	0 3	0 0006
Manila	1992	689	1 45	0 0021
Jakarta		520	1 1	0 0021

Sources Wangwongwatana (1998) WHO (1992) Romieu (1995)

In the absence of a significant industrial source such as a primary or secondary lead smelter or a steel mill, more than 90 percent of the ambient lead aerosol measured is likely to be attributable to leaded gasoline combustion Reducing the total mass of lead used in gasoline will likely produce a nearly proportional reduction in lead aerosol concentrations in the atmosphere

If a large industrial source of lead is not located in the area being monitored, it is likely that over 90 percent of lead aerosol in the atmosphere is coming from leaded gasoline combustion

To estimate the change in ambient lead concentration that would result from reducing or eliminating lead in gasoline, it is best to rely on local monitoring data, if available If measurements of ambient lead concentration are not available, then the data shown in Table 10 can be used to develop a first approximation Multiplying the lead content of gasoline (in grams per liter) by annual leaded gasoline consumption in an urban area (in millions of liters) will give the

annual lead emissions in tons Multiplying this value by 0 002 μg/m³-ton will give an order-of-magnitude estimate of the lead aerosol concentration caused by leaded gasoline use

5 2 Ambient Concentration Vs Blood Lead Concentration

A number of studies and reviews have examined the relationship between changes in the lead concentration in ambient air and the resulting change in average blood lead concentrations in children and adults These include studies by the World Health Organization (WHO, 1995), the U S Environmental Protection Agency (1986), and the California Office of Environmental Health Hazard Assessment (OEHHA) (Ostro et al , 1997) These reviews generally concur in finding that this relationship is non-linear, it has a relatively high slope at low ambient lead levels, and a decreasing slope as the lead concentration increases

Most of the available data linking blood lead concentrations to lead concentrations in ambient air are based on studies in developed nations with temperate climates (such as the United States, United Kingdom, the Netherlands, and Australia) and where ambient lead concentrations were between 0 5 and 10 μg/m³ The lead concentration in most urban atmospheres lies toward the lower end of this range Although individual studies have shown a wide range of relationships, the WHO, EPA, and OEHHA reviews concur that – for the range of lead concentrations typical of non-occupational exposures — the relationship of blood lead to lead in ambient air can be approximated as a linear function For adults, the slope of this function is approximately 2 μg/dl of lead in blood per μg/m³ of lead in ambient air For children, the slope lies between 3 and 5 μg/dl of lead in blood per μg/m³ of lead in ambient air, with a best estimate value of approximately 4 Thus, a reduction in average ambient lead concentration of 1 0 μg/m³ can be expected to produce a reduction in the average blood lead concentration of 2 μg/dl for adults and 4 μg/dl for children The half-life of lead in blood is about 36 days (WHO, 1995), so that average blood lead concentrations can be expected to respond to changes in ambient lead levels within two months

Lead can be absorbed by the body directly through inhalation or indirectly through lead aerosol settling on floors, cooking utensils, and other surfaces

The blood lead/air lead relationships shown in Figure 10 account both for lead absorbed directly (as a result of inhalation) and indirectly (as a result of lead aerosol settling on floors and other surfaces, cooking and eating utensils, etc) Based on direct inhalation alone, the blood lead to air lead ratio would be around 1 6 for adults and 2 0 for children Young children are subject to much greater indirect exposure than adults because of their tendency to play on the floor, and to put their hands and other things in their mouths Boys also tend to exhibit higher blood lead concentrations than girls, possibly because they spend more time playing outside

Implementers should bear in mind that the average blood lead concentration in a given population is a function not only of the lead concentration in ambient air, but also of total lead exposure through other media such as food, water, and dust or chips from lead paint Where lead exposure through other media is high, the incremental lead absorption due to lead in the air is likely to be less Conversely, where people are less exposed to lead through other media, their blood lead concentrations may be more sensitive to lead concentrations in the air

Figure 10 Expected Change In Average Blood Lead Concentration Due To A Change In Lead Concentration In Ambient Air

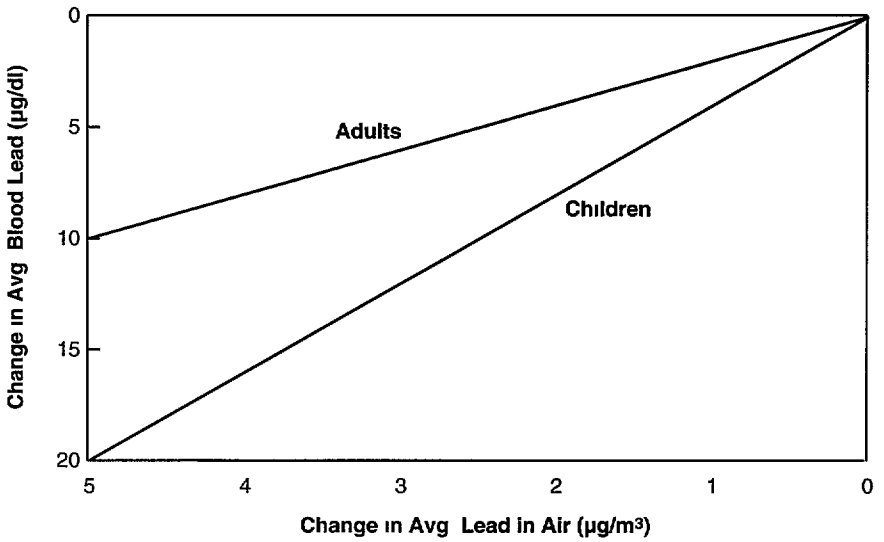

These blood lead/air lead relationships are based on population studies conducted mostly in developed nations with relatively cold climates, in which people tend to spend most of their time indoors, where there is relatively little interchange between indoor and outdoor air, where children are unlikely to spend much time on or near busy streets, and where anemia and malnutrition are uncommon Each of these factors would tend to reduce the slope of the blood lead/air lead relationship It is therefore very likely that the factors given here substantially underestimate the slope of the blood lead/air lead relationship in many developing countries, where people are likely to spend more time outdoors on busy streets, and where there is more interchange between indoor and outdoor air

When people have high exposure to other sources of lead (for example, indirect exposure or exposure through food or lead paint), their absorption of lead in the air is likely to be less And when they are less exposed through other media, their blood lead concentrations may be more sensitive to lead in the air

Most of the studies done on the blood lead/air lead relationship were conducted in developed countries, where people tend to spend less time outdoors For this and other reasons, the blood lead/air lead relationship's slope may be higher in developing nations

It is also important to note that these blood lead/air lead relationships reflect only the short-term effects of reducing ambient lead concentrations, and not the reduction in the long-term accumulation of lead in soil and croplands due to reducing overall lead emissions Again, this means that these calculations will tend to understate the long-term benefit of reducing lead emissions, as they do not account for the long-term reduction in lead concentrations, and thus lead from food and soil due to reducing lead emissions to the air

5 3 Estimating The Reduction In Blood Lead Due To Lead Phaseout

To estimate the reduction in blood lead concentrations from phasing out lead in gasoline, one must first calculate total lead emissions, and then relate these to ambient air monitoring data Gasoline lead emissions (in tons) are equal to the product of leaded gasoline consumption (in millions of liters) and the lead concentration in leaded gasoline (in grams per liter)

These studies also do not account for the long-term effects of reducing lead in soils, and may thus understate the long-term benefits of reducing lead

Table 11 shows a hypothetical example Leaded gasoline sales are 1000 million liters per year, with a lead concentration of 0 7 grams per liter, resulting in lead emissions of 700 tons per year The ambient lead concentration is 1 4 µg/m^3 Reducing the lead content to 0 15 gram per liter would reduce annual lead emissions by 550 tons, and would be expected to reduce the average ambient

lead concentration proportionally (assuming that there are no other significant sources of lead aerosol emissions) The resulting reduction in lead concentration would be 1 1 μg/m³

As shown in Section 5 2 the slope of the short-term relationship between blood lead and lead in air is approximately 2 for adults and 4 for children Thus, the expected short-term change in average blood lead concentrations for adults is two times the change in ambient concentration, or 2 2 μg/dl For children, similarly, it is 4 4 μg/dl

Table 11 Reduction In Blood Lead Concentrations Due To Reducing Lead In Gasoline A Hypothetical Example

	Values	Units
Leaded gasoline sales	1 000	million liters per year
Lead concentration in gasoline	0 7	grams per liter
Annual lead emissions	700	tons Pb per year
Avg lead concentration in air	1 4	grams per cubic meter
Effect of reducing lead to 0 15 g/liter		
Annual lead emissions	550	tons Pb per year
Change in lead concentration in air	1 1	grams per cubic meter
Change in blood lead adults	2 2	microgram per deciliter
Change in blood lead children	4 4	micrograms per deciliter

Figure 11 Blood Lead Concentration In Children Vs Quarterly Sales Of Lead In Gasoline, Chicago, USA

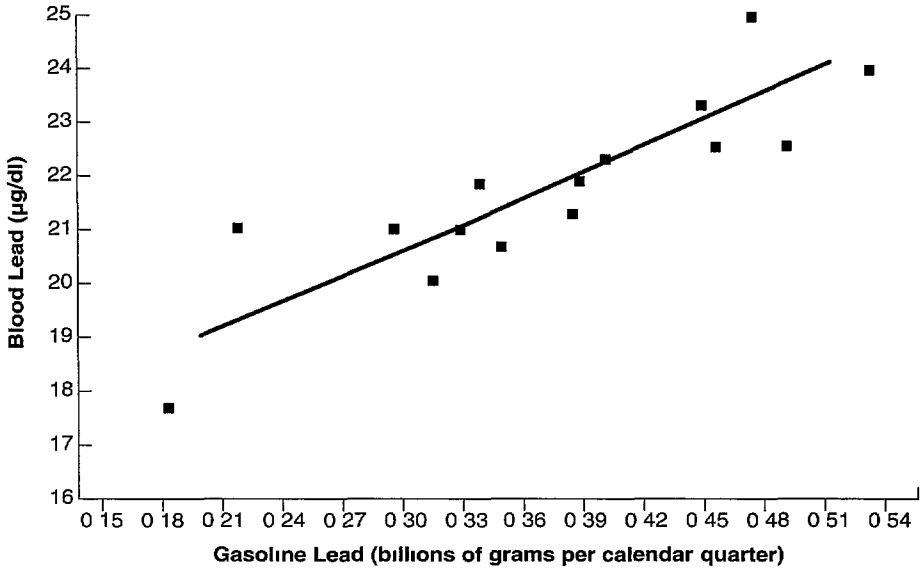

Source Schwartz et al (1985)

In a number of U S cities, average blood lead concentrations have been related directly to changes in total consumption of lead in gasoline In Chicago (Figure 11), a reduction of 300 tons per quarter in gasoline lead (1200 tons per year) resulted in a reduction of 5 μg/dl in the average blood lead concentration of children in a lead screening program In New York City (Figure 12), a reduction of 550 tons per quarter gave an average reduction of 7 μg/m³ in children's blood lead concentration

Figure 12 Blood Lead Concentration In Children Vs Quarterly Sales Of Lead In Gasoline, New York City, USA

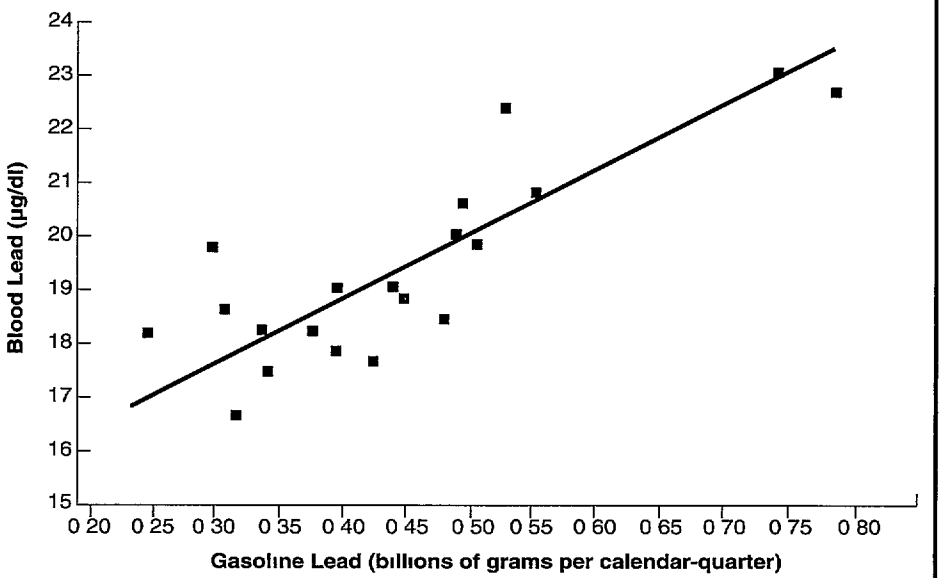

Source Schwartz et al (1985)

5 4 Assessing The Health Benefits Of Lead Phaseout

Numerous studies have documented the effects of lead on human health Major reviews of these studies have been carried out by the U S EPA (1986), World Health Organization (1995), and the California Office of Health Hazard Assessment (Ostro et al , 1997) The main adverse health effects associated with lead exposure in children are neurodevelopmental damage, resulting in lowered intelligence, increased incidence of behavioral problems, increased risk of learning disabilities, increased risk of hearing loss, and increased risk of failure in school In adults, lead exposure is linked to increased blood pressure, leading to increases in the incidence of hypertension, cardiovascular illness, stroke, and premature death Lead and the lead scavengers ethylene dichloride and ethylene dibromide are also considered possible human carcinogens, but the risk of cancer from emissions associated with lead in gasoline is much less than the risk of cardiovascular mortality due to hypertension

The main effects of lead in children are neurodevelopmental damage, and in adults increased blood pressure

5 4 1 Lead And Neurodevelopmental Effects In Children

All of the recent reviews of lead and its health effects agree in concluding that children with blood lead concentrations exceeding the "level of concern" of about 10 µg/dl can suffer impairments in the development of their central nervous system and other organs, impairments in cognitive function, and increased risk of behavioral problems The impairment in cognitive function is most readily measured by comparing results on standardized intelligence tests Performance on these tests has been shown to be a good predictor of later achievement in school, and to be correlated with lifetime earnings (Schwartz et al , 1985)

Other things being equal, a child with 20 µg/dl of lead in his or her blood will score about 2 6 points lower in IQ than one with 10 µg/dl To put this in perspective, U S children today average less than 5 µg/dl of blood lead, compared to around 15-20 µg/dl in the United States in the early 1970s or in many developing countries today This is equivalent to around 4 IQ points – a significant difference

Schwartz (1994a) conducted an extensive meta-analysis of the studies linking lead in blood with children's IQ He concluded that there is a highly significant association between blood lead levels and IQ in children, and that this association was robust to changes in model formulation, study type, and potential

confounding factors For an increase in blood lead concentration from 10 to 20 µg/deciliter, the meta-analysis predicted a decrease in mean IQ of 2 57 +/- 0 41 points, or 0 256 IQ points per µg/dl

Schwartz also found that the results do not support the potential existence of a blood lead "threshold" below which no significant harm occurs To the contrary, the data suggest that the damaging effects of lead on IQ extend to blood lead levels as low as 1µg/deciliter, and that the slope of the lead/IQ curve may even be higher at low levels of lead exposure If correct, this would imply that there is *no* acceptable level of lead exposure, and that every effort should be made to reduce even low levels of ambient lead

Data suggest that the damaging effects of lead on IQ extend to blood lead levels as low as 1µg/deciliter

Accepting Schwartz's analysis, a 1 µg/dl change in the mean blood lead concentration of preschool children would be expected to shift the mean IQ of the same children by 0 256 points It is not clear to what extent this effect is reversible that is, whether it is possible to improve the mental performance of children exposed to high blood lead concentrations during the critical early childhood years by reducing their lead exposure later in life There is some reason to believe that a significant part of the damage is permanent that is, that children exposed to high blood lead concentrations from birth to age six years are unlikely to recover their full mental function, even if this exposure is subsequently reduced

While the effect of blood lead on IQ is too small to be measurable in any individual child, the implications for the population of children as a whole may be significant In particular, a shift in the mean of the intelligence distribution may have a disproportionately large impact on the numbers of children classified as learning-disabled (with IQs less than 80) or gifted (with IQs exceeding 120)

In addition to its health effects, lead in the blood can affect children's lifetime earnings

Schwartz (1994a) also estimated the effects of lead exposure on schooling and lifetime earnings of children in the United States For people of near-normal intelligence, the effect of IQ on earnings was estimated at approximately a 0 5 percent change in lifetime earnings per one point change in IQ However lead exposure in children also reduces the chance of successfully completing school which tends to reduce both wages and the probability of employment Taking these effects into account, the present value of the total loss in earnings per µg/dl of lead in blood was calculated at approximately 0 6 percent of the total expected value of lifetime earnings

The change in the number of learning-disabled and gifted children due to a lead-induced shift in mean IQ can also be calculated Ostro (1997) indicates that IQ is normally distributed, with a mean of 100 and a standard deviation of 16 Figure 13 shows the projected effects of changes in blood lead concentration on mean IQ, and on the percentage of learning-disabled and gifted children, based on this distribution function

Figure 13 Effect Of Changing Average Blood Lead Level On Percentage Of Learning-Disabled And Gifted Children

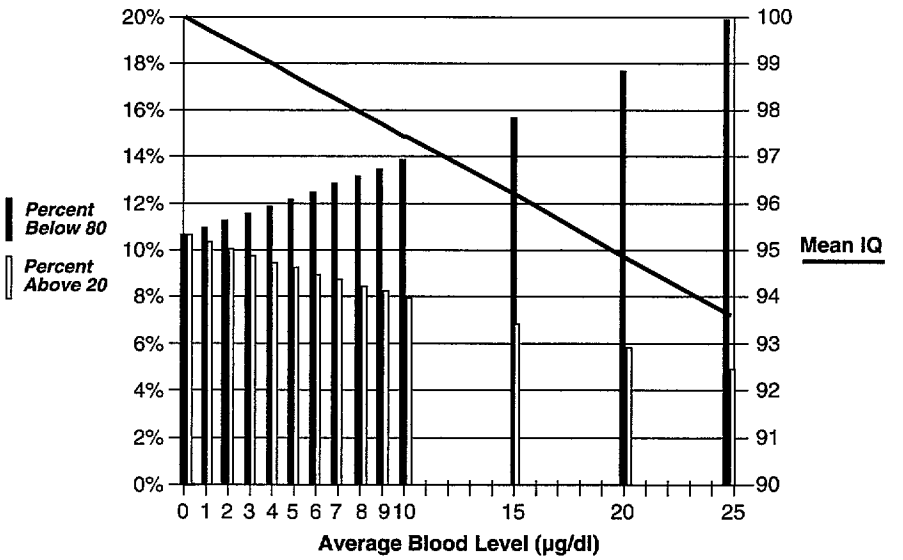

5 4 2 Lead And Blood Pressure In Adults

Numerous studies (Schwartz et al , 1985, EPA, 1990, WHO, 1995, Ostro et al , 1997) have shown a correlation between blood lead concentrations in adults (especially males aged 40 to 59) and blood pressure The general relationship is that a doubling of blood lead concentration (e g , from 5 to 10 µg/dl, or from 10 to 20) is associated with an increase in diastolic blood pressure of 1 9 mm of mercury (Hg) This directly increases the probability of hypertension (defined as diastolic blood pressure exceeding 90 mm Hg), and indirectly increases the chance of stroke, heart attack, and premature death Since both the relations between lead and blood pressure and those between blood pressure and the different health outcomes are nonlinear, calculating the change in the incidence of each outcome is complicated Ostro et al (1997) give the following equation for hypertension

$$\Delta H = (1 + \exp(-2\ 74 + b\ (\ln PbB1)))^{1} - (1 + \exp(-2\ 74 + b\ (\ln PbB2)))^{1} \qquad (1)$$

where

ΔH is the change in the probability of hypertension due to lead phaseout
PbB1 is the present mean blood lead concentration
PbB2 is the mean blood lead concentration expected after lead phaseout
b is a regression coefficient, equal to 0 79 +/- 0 48 (95% confidence interval)

The change in blood pressure due to a change in blood lead concentration is given by Ostro et al (1997) as

$$\Delta DBP = 2\ 74\ (\ln PbB1 - \ln PbB2) \qquad (2)$$

where

ΔDBP is the change in diastolic blood pressure due to lead phaseout
PbB1 and PbB2 are the lead concentrations in the blood before and after lead phaseout

The probability that a middle-aged man will die during the next 12 years is affected by his diastolic blood pressure For white males in the United States, aged 40 to 59, this probability is given by Ostro et al (1997) as

$$\Delta M = (1 + \exp-(5\ 32 + b(DBP1)))^{1} - (1 + \exp-(-5\ 32 + b(DBP1)))^{1} \qquad (3)$$

where

ΔM is change in the probability of death (from all causes) during the next 12 years

DBP1 = diastolic blood pressure associated with present lead exposure

DBP2 = diastolic blood pressure after lead phaseout equal to DBP2 + ΔDBP

b = regression coefficient equal to 0 035 +/- 0 14

The effects of increased lead blood levels are about twice as great in men as women

For women aged 40 to 59, they estimate that the effect will be half that for men

Table 12 shows how this calculation would be done for the hypothetical case outlined in Table 11 The average blood lead concentration among adults in this case is assumed to be 10 µg/dl, and the mean diastolic blood pressure is assumed to be 85 mm Hg (a more accurate calculation would consider the actual distribution of blood pressure levels among the population) The phaseout of leaded gasoline would reduce the mean blood lead concentration by about 2 2 µg/dl The resulting change in blood pressure is then calculated from Equation 2 Equation 3 is then used to calculate the probability that a man aged 40 to 59 will die within the next 12 years, based on this blood pressure level Finally, the total change in annual mortality is calculated by dividing this value by 12 For women, the change is assumed to be half as much (Ostro et al , 1997)

Table 12 Calculating The Reduction In Mortality Due To A Hypothetical Reduction In Blood Lead Concentration

Current Blood Lead Level (ug/dl)	10 0
Current Mean Blood Pressure (mmHg)	85 0
Proj 12 Year Mortality	8 75%
New Blood Lead Level (ug/dl)	7 8
New Mean Blood Pressure (mmHg)	84 3
Proj 12 Year Mortality	8 56%
Avoided Deaths/Million Persons/Year	
Males 40 59	157
Females 40 59	78

5 4 3 Lead And Cancer

A number of the compounds associated with leaded gasoline and its emissions are classed as known or potential carcinogens These include lead itself, the lead scavengers ethylene dibromide and ethylene dichloride, and such combustion products as 1,3 butadiene, benzene, formaldehyde, and acetaldehyde

Table 13 lists these compounds, along with the estimated carcinogenic potency of each Although benzene and formaldehyde have received more attention, 1,3 butadiene is actually much more important in terms of cancer risk, accounting

for two-thirds of the estimated cancer cases due to toxic air contaminants from gasoline vehicles in the United States (U S EPA, 1993)

Overall, the cancer risk due to motor vehicle emissions is low relative to the risk of non-cancer health effects For the United States, the total number of cancer cases due to gasoline-related mobile source emissions, based on upper-bound limits on carcinogenic potency, was calculated at 459 per year, with 1,3 butadiene accounting for 304 of these For non-catalyst vehicles, the relative importance of 1,3 butadiene is even greater

Overall, the cancer risk due to toxic contaminants from gasoline motor vehicle emissions is low relative to the risk of non-cancer health effects 1,3 butadiene accounts for two-thirds of the estimated cancer cases caused by these emissions in the United States

The arguments of lead additive suppliers, among others, have created public concern over a purported increase in cancer risk due to increased benzene emissions with unleaded gasoline These arguments are invalid for several reasons

- Increasing benzene and other aromatic compounds is only one of several options for making up the difference in gasoline octane due to the elimination of lead (see Chapter 2)
- Benzene emissions from motor vehicles would be unlikely to increase even if unleaded gasoline contained more benzene and aromatics This is because total hydrocarbon emissions tend to be lower with unleaded gasoline (see Chapter 8)
- Most important, overall cancer risk would be reduced due to the reduction in other carcinogenic compounds, especially 1,3 butadiene and lead

There is also some evidence that MTBE, a gasoline additive often used as a substitute for lead, may be weakly carcinogenic, although a formal determination of its carcinogenicity has not been made Relatively little MTBE survives the combustion process, however In emission measurements on non-catalyst Mexican vehicles using fuel with 7 percent MTBE by volume, MTBE made up only about 2 7 percent of the exhaust hydrocarbons (IMP, 1994) Because blending MTBE reduces benzene and 1,3 butadiene emissions, it is estimated to create a net reduction in cancer risk (California EPA, 1998)

Table 13 Carcinogenic Compounds Associated With Gasoline Combustion

Compound	Unit Risk 95% U B	Cancer Class	Est Cases in U S +	Typical Non Catalyst Emissions*	
				mg/km	benzene eq
1 3 Butadiene	2 80E 04	A	304	88	2 954
Benzene	8 30E 06	B2	70	83	83
Formaldehyde	1 35E 05	B1	44	79	128
Acetaldehyde	2 20E 06	B2	5 3	NA	NA
Inorganic lead	1 20E 05	B2		48	69
Ethylene dibromide	7 10E 05			NA	NA
Ethylene dichloride	2 20E 05			NA	NA

Average of 19 non catalyst vehicles in Mexico (IMP 1994) Fuel was 1 4% benzene 18% aromatics and 10% olefins
+ U S EPA (1993)

To calculate the potential change in cancer incidence due to gasoline composition changes resulting from lead phaseout, it is necessary to know the existing levels

of exposure to gasoline-derived carcinogens This can be estimated by air dispersion modeling or by directly measuring ambient concentrations A procedure for making such measurements is given by EPA (1997)

Unless a major non-gasoline emission source is present such as a chemical plant, gasoline combustion is the main contributor to lead, benzene, and 1,3 butadiene in the urban atmosphere (EPA, 1993) As a first approximation, therefore, one can estimate the effects of a change in gasoline composition by multiplying the measured or estimated ambient concentrations of benzene and 1,3 butadiene in the atmosphere by the percentage change in these emissions from gasoline vehicles To the extent that other sources contribute to these pollutants, this will overestimate the impact of the change in gasoline composition

Ambient benzene concentrations in urban areas of the United States range from about 4 to 7 $\mu g/m^3$, while 1,3 butadiene concentrations range from 0 12 to 0 56 $\mu g/m^3$ In Bangkok, a risk assessment by the U S Agency for International Development estimated ambient concentrations at 3-14 $\mu g/m^3$ for benzene and 2 $\mu g/m^3$ for 1,3 butadiene In Australia, the average ratio of 1 3 butadiene to benzene concentrations in a traffic tunnel was 0 21 To illustrate the potential impacts of a change in gasoline composition, initial concentrations of 10 $\mu g/m^3$ for benzene, 2 $\mu g/m^3$ for 1,3 butadiene, and 1 4 $\mu g/m^3$ for lead were assumed As an extreme example it was assumed that the changes in gasoline formulation due to lead phaseout increase benzene emissions by 50 percent, while reducing 1,3 butadiene emissions by 7 percent and lead emissions by 100 percent It was further assumed that MTBE concentrations increase from zero to 15 $\mu g/m^3$ as a result of the lead phaseout The total population of this hypothetical city, 5 million persons, is assumed to be exposed to these changed concentrations

Table 14 shows the resulting change in cancer risk In this case, the small increase in cancer risk due to the higher benzene concentration is more than offset by the reductions in 1,3 butadiene and lead, resulting in a net reduction in the 95 percent upper-bound risk of cancer of 0 8 cancer cases per year out of 5 million persons exposed Compared with the changes in lead-related non-cancer mortality calculated in Section 5 4 these impacts are negligible

Table 14 Example Of Change In Cancer Risk Due To Lead Phaseout

	Unit Risk*	Concentration ($\mu g/m^3$)		Cancer Incidence (cases/year)+	
Compound	95% Upper Bound	Before	After	Before	After
1 3 Butadiene	2 80E 04	2 0	1 86	40 0	37 2
Benzene	8 30E 06	10 0	15 00	5 9	8 9
Inorganic Lead	1 20E 05	1 4	0 00	1 2	0 0
MTBE	1 70E 07	0 0	15 00	0 0	0 2
Total				47 1	46 3

95% upper bound estimate of the risk of acquiring cancer due to exposure to 1 $\mu g/m^3$ concentration over a 70 year human lifetime

+ Unit risk x concentration x 5 000 000 exposed population / 70 years

5 5 Economic Value Of Reducing Adverse Health Impacts

As outlined earlier, reducing lead emissions can be expected to result in quantifiable reductions in hypertension, stroke, heart attacks, and premature death in adults, an increase in the average intelligence and improvements in the learning performance of children born in the future, and a future reduction in the number of mentally handicapped children In order to compare these benefits with the costs of phasing out lead in gasoline, it is useful to express these benefits in monetary terms In other words, it is necessary to place an economic value on such intangibles as death and disability, or at least on the avoidance of these problems

To quantify the benefits of phasing out lead in gasoline, it is necessary to place values on such things as death and disability, or on the avoidance of these problems

A lower bound for the economic value to society of avoiding premature death, disability, or illness can be established by considering the directly measurable costs of medical treatment for illness and compensatory education to overcome learning disabilities, as well as the calculable costs of lost wages or reduced earning power However, these directly calculable economic losses are only a small part of the entire picture, as they fail to account for the inherent value that people place on their lives and those of their loved ones, or for the harm suffered to people s enjoyment of life due to disease or disability

A fundamental tenet of economics is that the value of anything is determined by what people will pay for it Although money is certainly not an adequate measure of the grief and loss suffered by someone who is crippled or the family of someone who dies prematurely due to stroke or heart attack brought on by hypertension, or of a mentally handicapped child, it is possible to measure the amounts that people are willing to pay to reduce their risk of suffering such hazards (or, alternatively, the amounts that they are willing to accept as compensation for bearing an increased risk) By assessing this "willingness to pay" (WTP) to reduce risk, or the compensation demanded to accept an increased risk, it is possible to assess the value that people place on reducing their risks of death or illness

In economics, the value of anything is determined by what people will pay for it By assessing people's "willingness to pay" to reduce risk or what they are "willing to accept" as compensation for an increased risk, it is possible to assess the value that people place on reducing their risks of death or illness

Most of the available WTP studies have focused on the value to be imputed to reducing the risk of premature death, as this is generally the dominant factor in the calculation of health benefits Maddison et al (1997), in a study for the World Bank, reviewed the literature on the WTP to reduce the risk of death, and have adapted the results to the conditions common in developing countries In developed countries such as the United States, the imputed value of a statistical life saved (VOSL) has been estimated at around US $3 6 million This should not be interpreted as the "value" of saving any one individual life – a quantity that involves both theoretical and moral problems Instead, it should be interpreted as the value imputed to reducing the risk of premature death by a small increment for a large population – for example, the value of reducing by one chance in a million the risk experienced by one million persons Maddison et al suggest that this value should be reduced to $3 2 million for pollution-related deaths in the United States, because the people at greatest risk are generally older, with fewer years of life remaining than those dying as a result of traffic accidents or industrial hazards

People's willingness to pay to reduce risks depends on their income – countries with higher incomes are generally willing to pay more For this reason, VOSL

estimates for developing nations tend to be lower than those for the United States In their work for the World Bank, Maddison and coworkers derived VOSL values for cities representing a range of middle-income and lower-income countries These included Santiago de Chile, Shanghai, Manila, and Mumbai Other VOSL estimates have been developed by Conte Grand (1998) for Buenos Aires, and Shetty et al (1994) for Bangkok

Most of the calculable economic benefits due to lead phaseout result from the reduced risk of premature mortality for adults, and the improvement in educational performance and future productivity and earnings of children

Most of the calculable economic benefits due to lead phaseout result from the reduced risk of premature mortality for adults and the improvement in educational performance and future productivity and earnings of children Schwartz (1994b) reviewed all of the main health effects of lead in an attempt to quantify the societal benefits of reducing lead emissions in the United States With respect to the economic impacts of neurobehavioral problems in children, Schwartz calculated the combined effects of lower IQ, reduced probability of completing school, and reduced participation in the workforce due to a 1 µg/dl increase in blood lead concentration as a reduction of US $1300 (0 6 percent) in the net present value of lifetime earnings for a child turning 6 years of age

One researcher found that the benefits of reducing blood level concentrations in U S children by 1 µg/dl would have a net present value of nearly $7 billion For adults, this figure exceeds $10 billion

Table 15 summarizes the results of Schwartz's calculations As this table shows Schwartz calculated the net present value of increased earnings due to reducing blood lead concentrations in U S children by 1 µg/dl to be more than US $5 0 billion per year Total benefits to children were calculated at $6 9 billion, with reduced infant mortality accounting for more than $1 1 billion, and reductions in the costs of medical care and compensatory education accounting for $0 8 billion For adults, Schwartz valued the total benefits at $10 6 billion, of which $9 9 billion is attributed to reduced mortality, $0 6 billion to medical cost savings, and $0 1 billion to lost wages due to illness Thus these two main effects account for more than 85 percent of the total benefit In calculating these values, Schwartz used a VOSL estimate for the United States of $3 0 million for both infants and adults, which is toward the low end of the range of recent VOSL estimates

Table 15 Estimated Benefits Of Reducing Blood Lead Concentrations In The United States By 1 0 µg/dl

Nationwide Benefits (millions of US$)			
Adults		**Children**	
Premature mortality	9 900	Medical costs	189
Medical costs		Compensatory education	481
Hypertension	399	Lifetime earnings	5 060
Heart attacks	141	Infant mortality	1 140
Strokes	39	Neonatal care	67
Lost wages		Total children	6 937
Hypertension	50		
Heart attacks	67		
Strokes	19		
Total adults	10 615	**Combined population**	**17,552**

Source Schwartz (1994b)

6. CONDUCTING A COST-BENEFIT ANALYSIS

The selection of a lead phaseout strategy should take into account the costs and benefits of the different alternatives, and such considerations as technical and political feasibility, the legal basis for the strategy, equity among various social sectors, and acceptability to political decision makers and the public Ideally, the strategy selected should be the one with the greatest net benefits among those strategies that are technically feasible, legally viable, equitable, and acceptable

This chapter first explains the purpose of a cost-benefit analysis and describes the main components of a lead phaseout cost-benefit analysis

Next, it discusses the specific lead phaseout strategies implementers should consider in their cost-benefit analyses, stressing the inclusion of a strategy where lead content is reduced as much and as quickly as possible

Last, this chapter shows how the benefits and costs of lead phaseout are calculated under two hypothetical strategies a near-term strategy that seeks to reduce the lead content of gasoline as quickly as possible, and a longer-term strategy that delays lead phaseout until new refinery process units can be constructed

The Steps In Selecting A Lead Phaseout Strategy

1 Identify alternative phaseout strategies

First, implementers should identify a number of alternative phaseout strategies that are technically feasible and legally viable

2 Assess net costs to the public and the public health benefits of each strategy

In this step, implementers should seek to quantify, to the extent pos sible, the social costs and benefits of each strategy

3 Select preferred phaseout strategy

Last, implementers should assess the strategies to determine which of them are technically feasible, legally viable, equitable, and acceptable to decision makers and the public, and from them, select the strategy with the greatest net benefits

6 1 Cost-Benefit Analysis And Strategy Selection

Cost-benefit analysis is a technique for comparing the costs and the benefits of alternative courses of action, considered from the viewpoint of the society as a whole (For the purposes of cost-benefit analysis, "society" can be considered to comprise the entire human population affected positively or negatively by a given decision — for instance, the entire national population if a decision is of national importance)

Cost-benefit analysis helps implementers to determine the course of action that will result in the greatest net benefits (total benefits minus costs) for the society affected by a decision This is an important technique in environmental decision making, where the costs can be quite large and the benefits difficult to quantify

The cost-benefit analysis performed to assess the proposed lead phaseout in the United States was instrumental in creating a strong consensus for action and in reversing policies that had weakened controls on leaded gasoline

The purpose of cost-benefit analysis is to determine the course of action that will result in the greatest net benefits (that is, total benefits minus costs) for the society in question While not infallible, a rigorous cost-benefit analysis can help government leaders and legislators to avoid costly errors and to make the best use of limited resources Cost-benefit analysis is especially useful in setting priorities and making decisions in the environmental field Such decisions often involve significant economic costs, while the benefits of improved health and well-being may be more difficult to quantify While cost-benefit analysis cannot substitute for value judgments or moral decisions, it can often help to clarify such judgments and the stakes involved in such decisions

By providing a clear quantification and comparison of the costs and benefits of a given decision, cost-benefit analysis can also help to resolve controversies, overcome opposition, and secure public and political support for policies that are clearly justifiable on cost-benefit grounds For example, the rigorous cost-benefit analysis performed for the proposed phaseout of leaded gasoline in the United States (Schwartz et al , 1985) created a strong consensus for immediate action, and led to a sharp reversal in the existing policy, which had previously been to weaken controls on leaded gasoline Such a consensus would have been very difficult to develop in the absence of the clear conclusions derived from the cost-benefit analysis

6 2 Cost-Benefit Comparison Of Alternative Strategies

A cost-benefit analysis of alternative lead phaseout strategies should begin with a definition of the different strategies under consideration The analyst should then seek to quantify, to the extent possible, the social costs and benefits of each strategy

In evaluating social costs, cost-benefit analysts normally focus on the actual consumption of resources (labor, goods, and services) available to society, excluding from consideration the effect of *transfer payments* These payments shift resources from one economic actor to another, but do not directly reduce the overall stock of goods and services available

Social Costs Vs Transfer Payments

The social cost of a liter of gasoline in the refinery or in the port is generally evaluated as equal to the amount that a country would have to pay to purchase it from abroad (in the case of importing nations) or would receive from selling it abroad instead of using it at home (in the case of exporters) In both cases, this amount is the international price of gasoline, adjusted for applicable transport costs

The transportation, distribution, and retail marketing of gasoline also involve the consumption or exclusive utilization of social resources such as labor, transport, buildings, and land, resulting in real social costs that must be taken into account in the cost-benefit analysis, where applicable In contrast, a government tax on gasoline does not result in the consumption of resources, but only transfers them from the consumer paying the tax to the government It is thus a transfer payment, not a cost

In the case of lead phaseout, the principal social cost will be the increase in the cost of producing gasoline of a specified octane quality, while the principal benefits will be the reductions in the adverse health effects due to lead exposure and the savings on automotive maintenance costs experienced by vehicle owners Methods for estimating the change in refining costs due to lead phaseout were discussed in Section 2 7, while a method for quantifying the maintenance benefits was demonstrated in Section 3 4 Because both refining costs and maintenance benefits are expressed in monetary terms, their quantification is relatively straightforward, and does not depend on questions of values (however, because of the complexity of the refining sector, considerable effort may be required to arrive at an accurate estimate of refining cost changes)

In lead phaseout, the principal social cost will be the increase in the cost of producing gasoline of a specified octane quality The principal benefits will be reductions in adverse health effects and savings on automotive maintenance costs

Quantifying the health benefits of lead phaseout is more complicated, as these benefits are very much linked to human values As outlined in Chapter 5, the main identifiable health benefits due to lead phaseout are the reductions in the incidence of hypertension, stroke, heart attack, and premature mortality due to lower blood lead concentrations in adults, in children, they include reductions in the loss of IQ points (and associated earning power) and decreased incidence of developmental disabilities Of these, the changes in adult mortality and children's average IQ account for most of the benefits that can be quantified and expressed in monetary terms In the interest of saving analytical time, the analyst may wish to confine his or her attention to these factors While omitting other, smaller health benefits from consideration will tend to bias the overall estimate downwards, this is unlikely to affect the ultimate conclusions, as even very conservative estimates of the benefits of lead phaseout have generally exceeded the costs by a factor of 10 or more

Even very conservative estimates have found that the benefits of lead phaseout generally exceed the costs by a factor of ten or more

6 3 Potential Lead Phaseout Strategies

Potential strategies for lead phaseout were discussed in Section 2 7 In general, it is recommended that the cost-benefit analyst consider several different lead phaseout strategies involving different generic approaches to meeting the octane deficit due to removing lead The additional refining costs involved in each strategy, as well as any incremental costs for fuel transportation, distribution, and marketing, should be taken into account These should then be compared with the benefits of reduced automotive maintenance costs, reduced mortality in adults, and improved intelligence in children If adequate analytical resources are available, other benefits can also be included These include the savings in medical costs due to reduced incidence of hypertension, stroke, and heart disease, reductions in the cost of remedial education for children, and reductions in the cost of medical treatment for lead toxicity

In their cost-benefit analyses, implementers should consider at least one strategy in which the lead content in existing leaded gasoline grades is reduced as much as possible and as quickly as possible

The specific lead phaseout strategies to be considered in each case will depend on each country's situation its gasoline consumption levels, gasoline sources (especially the degree of reliance on local refining), the equipment already installed at local refineries, pipeline and port capacity, and related issues It is strongly recommended, however, that the set of lead phaseout strategies considered include at least one strategy in which the lead content of existing leaded gasoline grades is reduced as quickly as possible, and by as much as possible – using measures such as the blending of imported MTBE, alkylate or other high-octane blendstocks, revamping of catalytic reformers, and other steps as necessary to achieve the greatest possible lead reduction in the shortest time Although this rapid phaseout approach will often result in higher gasoline production costs than a slower approach based on upgrading refinery processing equipment, *the benefits of earlier reduction in lead emissions usually outweigh the additional costs*

6 4 Example Of Cost-Benefit Comparison

This section presents an example of a cost-benefit comparison for the hypothetical case and two hypothetical strategies developed in previous chapters

Hypothetical case Chapter 5 estimated the probable reductions in ambient lead levels and average blood lead concentrations due to a given reduction in total lead emissions in a hypothetical city

Hypothetical strategies Section 2 7 developed costs for two hypothetical lead phaseout strategies

- *A near-term strategy* using MTBE and imported high-octane blending components, along with increased reformer severity and some upgrading of reformer catalyst, to reduce the lead content of regular gasoline to 0 1 g/liter while eliminating lead entirely from premium gasoline
- *A longer-term strategy* to achieve higher octane levels by adding new refinery process units such as isomerization, alkylation, and catalytic reforming

Below, these two hypothetical strategies are applied to this hypothetical case Existing gasoline sales under the status quo are assumed to comprise 500 million liters of regular and 500 million liters of premium per year, with lead contents of 0 7 g/liter in each case

In the first, or slow phaseout strategy, refiners begin planning and building new process units in Year 1, in order to be able to eliminate the need for lead additives beginning in Year 4 *In the second quick phaseout strategy* refiners also begin planning and building process units in Year 1 to eliminate all need for lead in Year 4 In the meantime, however, they carry out the near-term strategy outlined in Section 2 7 – blending MTBE and imported high-octane components into both regular and premium grades, thus reducing annual lead emissions in the hypothetical city from 700 tons to 50 tons Table 16 shows the effect of each strategy on ambient lead concentrations and average blood lead levels among adults and children

Table 16 Effect Of Lead Phaseout Strategies On Blood Lead Concentrations Hypothetical Case

	Values	Units
Leaded gasoline sales	1 000	million liters per year
Lead concentration in gasoline	0 7	grams per liter
Annual lead emissions	700	tons Pb per year
Avg lead concentration in air	1 4	grams per cubic meter
Effect of Low-Lead Regular with Unleaded Premium		
Annual lead emissions	650	tons Pb per year
Avg lead concentration in air	1 3	grams per cubic meter
Avg lead in blood adults	2 6	micrograms per deciliter
Avg lead in blood children	5 2	micrograms per deciliter
Effect of Eliminating Lead		
Annual lead emissions	700	tons Pb per year
Avg lead concentration in air	1 4	grams per cubic meter
Avg lead in blood adults	2 8	micrograms per deciliter
Avg lead in blood children	5 6	micrograms per deciliter

To complete the benefits assessment, it is necessary to estimate the effect of the change in blood lead concentrations among adults on the mortality rate, and thus to calculate the number of premature deaths avoided under each strategy

Table 17 shows the results of this calculation The reduction in mortality among adults aged 40 to 59 can then be multiplied by the number of people in that age cohort to calculate the change in the total number of deaths

Calculating the benefits to adults In order to express the benefit of this mortality reduction in monetary terms, the change in the number of deaths per year must be multiplied by an estimate of the value of a statistical life (VOSL) For this hypothetical case, it was assumed that the total size of the cohort aged 40 to 59 is 500,000 persons For conservatism, a relatively low value for VOSL of US $200,000 was assumed This is the value suggested

for Shanghai, Manila, and Mumbai by Maddison et al (1997) The benefits calculated in this way amount to about US $ 30 million per year, as shown in Table 18

Table 17 Effect Of Changes In Adult Blood Lead Concentrations On Mortality Hypothetical Case

	Low Lead	Zero Lead
Current blood lead level (µg/dl)	10 0	10 0
Current mean blood pressure (mmHg)	85 0	85 0
Proj 12 year mortality	8 75%	8 75%
New blood lead level (µg/dl)	7 4	7 2
New mean blood pressure (mmHg)	84 2	84 1
Proj 12 year mortality	8 52%	8 50%
Avoided deaths/million persons/year		
Males 40 59	190	207
Females 40 59	95	103

Table 18 Calculation Of Population-Wide Health Benefits Hypothetical Case

	Low Lead	Zero Lead	Units
Change in lead emissions	650	700	tons per year
Change in adult blood lead	2 6	2 8	micrograms per deciliter
Adults 40 59 affected	500 000	500 000	persons
Change in mortality 40 59	142	155	deaths /year
Assumed value of statistical life	$200 000	$200 000	US$
Monetized adult benefit	$28	$31	million US$
Change in child blood lead	5 2	5 6	micrograms per deciliter
Change in avg child IQ	1 33	1 43	IQ points
Change in avg lifetime earnings	3 12%	3 36%	
Monetized benefit/child	$1 248	$1 344	US$
Children affected	100 000	100 000	persons
Total child IQ benefit	$125	$134	million US$
Total health benefits	**$153**	**$165**	**million US$**

Calculating the benefits to children Table 18 also shows how to calculate the benefits of reduced blood lead in children Here, the main effect is the increase in average IQ, and thus the increase in the present value of lifetime earnings Schwartz (1994b) calculated this benefit as 0 6 percent of lifetime earnings per µg/dl of blood lead at age six The net present value of lifetime earnings was assumed to be US $40,000 in this case about one-sixth of the estimate developed by Schwartz for the United States This is consistent with the assumption of a relatively low income level, as in Shanghai or Manila The resulting change in lifetime earnings is somewhat more than 3 percent, for a total of around $1300 per six-year old child Here, it was assumed that 100,000 children turn 6 years old each year, giving a net benefit in the neighborhood of $130 million The benefits are slightly less for the low-lead strategy, and slightly more for the zero-lead strategy

Results Table 19 compares the overall costs and benefits of each strategy To simplify the calculation, the costs of the refinery investment are assumed to be included in the cost of the fuel (from Table 6), and are not accounted for separately As this table shows, the slow phaseout strategy results in no difference in fuel cost or lead emissions during the first three years, and thus no difference in the costs or benefits compared to the status quo Once the lead phaseout takes effect in Year 4, however, the net benefits amount to US $206 million per year

In this hypothetical case, the change in gasoline costs is very small compared to the health benefits, or even to the reduction in vehicle maintenance costs alone Although the quick phaseout strategy results in higher near-term costs of gasoline production, the benefits of rapidly reducing lead emissions are more than 14 times greater than these costs, resulting in net benefits of US $180 million per year The difference in the total net present value of benefits, compared to the slow phaseout scenario, is $447 million

Table 19 Cost-Benefit Comparison Of Lead Phaseout Strategies Hypothetical Case

	Yr 1	Yr 2	Yr 3	Yr 4	Yr 5	5 yr NPV
Status Quo						
Added gasoline costs (million US$)	0	0	0	0	0	$0
Vehicle maint saving (million US$)	0	0	0	0	0	$0
Lead emissions (t/y)	700	700	700	700	700	
Health benefits (million US$)	0	0	0	0	0	$0
Slow Phaseout						
Added gasoline costs (million US$)	0	0	0	0	6 2	$8
Vehicle maint saving (million US$)	0	0	0	0	47	$61
Lead emissions (t/y)	700	700	700	700	0	
Health benefits (million US$)	0	0	0	165	165	$216
Total benefits compared to status quo	0	0	0	206	206	$269
Quick Phaseout						
Added gasoline costs (million US$)	13 6	13 6	13 6	6 2	6 2	$42
Vehicle maint saving (million US$)	40	40	40	47	47	$161
Lead emissions (t/y)	50	50	50	0	0	
Health benefits (million US$)	153	153	153	165	165	$597
Total benefits compared to status quo	180	180	180	206	206	$716
Total benefits compared to slow phaseout	180	180	180	0	0	$447

7. CHOOSING POLICY INSTRUMENTS

The policy instruments available for implementing a lead phaseout strategy depend on the legal system, the ownership structure of any existing refineries, and the policy and/or regulatory framework governing motor vehicle fuels and their distribution

Examples of instruments Some of the most important instruments available for lead phaseout include

- *Direct action* Governments can take direct action when they own or control the refinery, or when they purchase fuel for the country's own use Examples of direct action might include directing a state-owned refinery to reduce its use of lead, or specifying low-lead or unleaded gasoline for government purchases
- *Regulatory "command and control" measures* Examples of these instruments include limiting the maximum lead content of gasoline, or prohibiting imports of lead additives and gasoline containing them
- *Market-based incentives* Examples of these instruments might include a tax on lead additive imports, on leaded gasoline, or (preferably) on the lead content of gasoline
- *Public information measures* These instruments, which are discussed in Chapters 10 and 11, include such actions as requiring gasoline lead content to be posted at the service station, publicizing the adverse health impacts of lead from gasoline, and making consumers aware of the savings in maintenance costs possible with low-lead or unleaded fuel

Where legally feasible, market-based measures are generally preferable to command-and-control regulations The decision to add lead to gasoline is an economic one on the part of the refiner – lead is the cheapest way of achieving the necessary octane level By changing market conditions so that this is no longer true, refiners can be induced to reduce, and ultimately eliminate, lead use as quickly as possible The flexibility of market-based incentives also helps to reduce the chances of a regulatory mistake – allowing too little time for the necessary changes (and thus disrupting the gasoline market) or allowing too much time, and thus allowing the health damages due to leaded gasoline to continue longer than necessary

Where legally feasible, market-based measures are generally preferable to command-and-control regulations

Previous Page Blank

CHOOSING POLICY INSTRUMENTS

After discussing the issues that surround the ownership structure of a country's refining sector, this chapter compares two important policy instruments that can be used in a lead phaseout strategy

- Command-and-control instruments, which involve the government mandating the actions of industries or individuals
- Market-based incentives, which allow industries or individuals more flexibility in their decisions, but provide incentives and disincentives for particular decisions

It then reviews the lessons learned from employing these policy instruments in the United States

Ownership structure considerations Where petroleum refining and distribution are carried out by the private sector, the main concerns are generally to define the quickest phaseout schedule achievable without disrupting the gasoline market, and to incorporate sufficient flexibility in the regulations to accommodate legitimate differences in the time periods required for different refineries to comply The monitoring and enforcement of compliance with the schedule should also receive careful attention, and it may be necessary to overcome political opposition from refinery owners Where petroleum refineries are owned by the government, these issues are generally less difficult, but the mobilization of adequate funds for refinery investments may present a significant problem

The Steps In Choosing Policy Instruments

1 Identify legal authority

Implementers should first identify the legal authority or authorities available as a basis for policy instruments

2 Assess available policy instruments

Next, they should assess the types of instruments that are legally permissible under the authority(ies) identified For example govern ment agencies often have the authority to limit or prohibit the emission of toxic substances, but may require new legislation in order to change the tax rates on fuel

3 Evaluate the "fit" between strategy and instruments

Implementers should then assess the compatibility between the strategy chosen and the instruments available They should carefully review existing regulations and legislation to ensure that these do not present a barrier to the changes required For example, gasoline quality regulations sometimes specify *minimum* as well as maximum lead content, or they may fix maximum limits on ethers or other components at lower levels than necessary

4 Select "best" combination of instruments

Last, implementers should select the best combination of instruments, considering their effectiveness, costs and benefits, timing, flexibility, and political acceptance

7 1 Command-And-Control Instruments

In most countries, government agencies already have been granted authority to set and enforce quality and composition standards for motor fuels They will often have the authority to limit or prohibit the use of harmful additives such as TEL The legal basis for such limitations might be found either in the demonstrable damage to human health due to lead emissions, or, alternatively, in the harmful effects of lead and lead scavengers on engines

The transition from leaded to unleaded gasoline cannot occur overnight Thus, command-and-control regulations must allow enough time for the refining industry to adjust to the phaseout requirements The amount of time required will vary depending on the situation in each country, including the availability of excess domestic octane-producing capacity, the availability and cost of imported octane enhancers such as MTBE and high-octane gasoline blendstocks, and the capacity of ports and transportation systems to handle imports of these materials

It is important that the amount of time allowed for industry to comply not be too short, as this may result in disruptions of the gasoline market, which in turn are likely to lead to a reversal of the lead phaseout decision on political grounds On the other hand, the grace period allowed for compliance should not be longer than necessary, in order to minimize the adverse impacts on human health and the environment

The example of Egypt shows that lead phaseout can proceed very quickly – within a few months – given favorable circumstances and adequate availability of high-octane blending components such as MTBE The refining industry will generally argue for a longer grace period Unless the agency involved has such expertise in-house, it is generally advisable to seek the advice of expert consultants in determining the length of any grace period allowed, and the maximum lead levels to be allowed in gasoline during the interim

In most countries, government agencies already have been granted authority to set and enforce quality and composition standards for motor fuels

Because it takes time to make the transition from leaded to unleaded gasoline, command-and-control regulations must allow enough time for the refining industry to adjust to the phaseout requirements

Lead Phaseout In Egypt
A Rapid Reduction Strategy Succeeds

The Arab Republic of Egypt has moved rapidly to phase out leaded gasoline In 1994, a health risk assessment funded by the U S Agency for International Development (USAID) estimated that lead exposure from all media was responsible for 6,500 to 11,600 heart attacks per year, 800 to 1,400 strokes, and 6,300 to 11,100 premature deaths among Cairo residents aged 40 to 75 (Sessions et al, 1994) Each year, 820 infants were projected to die as a result of low birth weight due to maternal lead exposure, and children in Cairo were projected to lose an average of 4 25 IQ points each Annual mean concentrations of airborne lead in Cairo ranged from 0 5 to 10 $\mu g/m^3$ at different monitoring sites About two-thirds of the lead emissions were estimated to be due to leaded gasoline The remaining third was estimated to be due mostly to the recycling of lead-acid batteries in secondary lead smelters – all of which lacked emission controls, and many of which were located in residential areas

In response to this assessment, the Ministry of Petroleum directed the state-owned refining industry to eliminate lead additive use as rapidly as possible By making process changes and blending 15 percent MTBE in gasoline, the Egyptian refining industry was able within six months to eliminate lead from 85 percent of the gasoline sold in Egypt, and to eliminate all sales of leaded gasoline in the Cairo Metropolitan Area The remaining 15 percent of leaded fuel is produced by two refineries in upper Egypt, and it is expected that these will be upgraded to eliminate the need for lead antiknocks by mid-2000

To reduce exposure to other sources of lead, the Egyptian Government has adopted and is in the process of carrying out a Lead Abatement Action Plan with assistance from USAID This plan provides for the closure of most secondary lead smelters in the Cairo Metropolitan Area, with the remainder being relocated to industrial districts and equipped with modern emission controls

When designing phaseout regulations, implementers should consider ways to monitor and enforce compliance

In designing lead phaseout regulations, implementers should consider the mechanisms that will be used to confirm compliance with the limits on lead use, and to take appropriate legal enforcement action against refiners or importers who are found to be in violation of the limits These mechanisms should generally include mandatory reporting of lead imports by refiners and lead vendors, and mandatory reporting of lead concentrations in gasoline produced or imported The agency responsible should check the accuracy of these reports by obtaining and analyzing actual gasoline samples at the port, at the refinery, and at the service station

7 2 Market-Based Instruments

With proper design, market-based or incentive measures can have a number of advantages compared to traditional "command and control" regulations These include greater flexibility, lower economic costs overall to achieve the same or greater emission reduction, reduced administrative burden, reduced risk of economic damage due to regulatory mistakes, greater transparency, and reduced scope for corruption and malfeasance in their administration

Despite these advantages, however, most air quality management programs give too little attention to market-based instruments Often, the reasons for this neglect are political – concerns that the use of such measures may allow rich people to "pay to pollute," or that they will disproportionately affect the poor When implemented appropriately, however, market-based measures can benefit the poor, both directly (by reducing their exposure to air pollution and the consequent health damages), and indirectly (through a better economic climate, leading to increased growth, and by increasing the financial resources available to government for palliative measures)

Economic incentives can take a number of forms These include subsidies or tax reductions for environmentally desirable actions, fees or increased taxes on actions that are environmentally undesirable, and trading schemes, in which different actors may buy or sell permits or quotas related to pollutant emissions Of these, subsidies are generally not recommended for promoting lead phaseout, because of the potentially large demand they would make on scarce public resources, and the large potential for abuse Taxes and trading schemes are recommended for consideration, however

Subsidies are generally not recommended for promoting lead phaseout, because of the potentially large demand they would make on scarce public resources, and the large potential for abuse

Fees and taxes Of the policy instruments available, fees and taxes have probably been the least used However, such taxes offer great potential In contrast to subsidies, "Pigouvian" or "green" taxes can serve a dual purpose by acting as a disencentive to polluting conduct, while at the same time contributing to overall public revenue Such taxes can be especially effective when – as is the case with lead in gasoline – the polluting actions are being undertaken for economic reasons

A Pigouvian tax is imposed to "internalize" the external costs of an activity that results in pollution or other externalities Externalities occur where the price of an activity as perceived by the decision maker differs from the cost of that activity to society as a whole For example, the cost to a motorist of driving a car does not include the impacts of air pollution, congestion, noise, etc , that are borne by others By taxing either the externality-producing activity (e g , driving) or a closely-associated input or output such as fuel, a Pigouvian tax is intended to change the price signals seen by an individual decision maker so that they more closely approximate the real costs to society In this way, the choices made by the decision-maker are likely to be closer to those that would be optimal for the society as a whole

Pigouvian or "green" taxes can both provide a disencentive to polluting conduct and contribute to overall public revenue

The theory and potential applications of Pigouvian taxes to pollution control have been studied by World Bank economists (Eskeland and Devarajan, 1996) Lead in gasoline is especially well-suited for control by means of a Pigouvian tax, as the level of pollution is directly related to the amount of

lead used, which is readily monitored both at the port (for imports of TEL) and in the finished gasoline

Ideally, the rate of tax on lead used in gasoline would be equal to the economic disbenefits imposed by its use In practice, however, implementers must consider the negative effects on the market if a high tax is suddenly imposed

Ideally, the rate of tax on lead used in gasoline would be equal to the economic disbenefits (costs) imposed by its use For example, in the hypothetical case outlined in the preceding chapter, total lead emissions of 700 million grams per year resulted in health damages equivalent to US $165 million This would justify a tax rate of $0 236 per gram of lead ($165 million/700 million grams) In practice, such a high tax rate would likely disrupt the gasoline market if it were imposed suddenly Even a much lower tax rate, on the order of $0 10 per gram, would more than offset the saving in refining costs due to lead use, and would serve as a strong incentive to refiners to reduce their lead use as quickly as possible At the same time, the funds mobilized by the tax could be used to set up an effective monitoring and enforcement program, to fund publicity campaigns and for other purposes in connection with the phaseout of lead in gasoline If necessary, some of the funds raised in this manner could be used to finance the needed investments in refinery process units

The trading of "lead rights" may provide an alternative mechanism for introducing flexibility into the lead phaseout process

Lead "rights trading" If a Pigouvian tax on lead is not feasible, the trading of "lead rights" may provide an alternative mechanism for introducing flexibility into the lead phaseout process In this approach, regulators fix a limit on the average lead content of each refinery's gasoline production If a refinery produces gasoline with a lower lead concentration than the maximum, it can sell to another refinery the right to produce gasoline containing a corresponding amount of lead in excess of the maximum To guard against abuses, such trading requires careful safeguards and effective verification mechanisms If properly implemented, however, lead rights trading can make it possible to achieve much faster reductions in lead use than would be possible if all gasoline producers had to meet the same lead limits without trading

The lead rights trading approach was used by the EPA as part of its lead phaseout plan in the 1980s The experience with lead rights trading in the United States is summarized in the next section

7 3 Lessons From The U S Experience

The U S experience in phasing out leaded gasoline is described by Nichols (undated) In the 1970s, average lead concentrations measured in U S cities often exceeded EPA's 3-month average air quality standard of 1 5 μg/m^3 (today, it is recognized that even this standard is insufficiently protective of human health) The mandatory sale of unleaded gasoline was introduced in 1974, in order to meet the needs of cars equipped with catalytic converters At that time, leaded gasoline contained an average of 2 4 grams of lead per gallon (0 63 g/liter) and average blood lead concentrations among children in major cities were around 20 μg/dl

In the United States, the allowable lead content in leaded gasoline was reduced to 1 1 gram per gallon by 1982 and to 0 1 gram per gallon in 1986 By 1995, sales of leaded gasoline were banned

Through a phased program, the allowable lead concentration in leaded gasoline was reduced to 1 1 gram per gallon (0 29 g/l) by 1982 This rule also introduced the trading of lead rights between refineries so that a refinery that was able to produce gasoline containing less than 1 1 gram per gallon could sell the excess "lead rights" to another refinery that needed them By 1984, about half of the refineries in the United States were partici-

pating in this market, with the larger, more complex refineries generally selling lead rights to smaller refineries that had less capability to produce high-octane gasoline through process changes (Nichols, undated)

In 1984, EPA carried out a major cost-benefit evaluation of further lead reductions (Schwartz et al, 1985) This study concluded that the benefits of further reducing lead use in gasoline greatly outweighed the costs, and that allowable lead concentrations should be reduced to a minimum as quickly as possible A final rule was promulgated in March 1985, reducing the allowable lead concentration to 0 5 gram per gallon in July 1985 and to 0 1 gram per gallon (0 026 g/l) on January 1, 1996 The decision to reduce the allowable lead content to 0 1 gram per gallon instead of zero was due to widespread public concern (fomented by the lead industry) over the potential for damaging valve seat recession to occur in older engines The allowable concentration was retained at this level until leaded gasoline sale was finally banned in 1995, pursuant to the 1990 revisions to the Clean Air Act

An important feature of the 1985 regulation was the provision allowing refiners to "bank" unused lead rights for later sale or use At the time the rule was promulgated, many refineries had the capacity to produce gasoline containing substantially less than 1 1 gram per gallon By reducing their lead use in advance of the legal limit, they were able to store up lead rights for the future, when they would be more valuable As discussed in Chapter 2, the nonlinear relationship between lead and octane means that the benefit of going from 0 1 to 0 2 grams of lead per gallon is much greater than the octane loss due to going from 1 1 to 1 0 gram per gallon Thus, lead rights saved when the maximum limit was 1 1 g/gallon became much more valuable when it dropped to 0 1 gram/gallon

EPA estimated that the trading and banking of lead rights would save between US $173 and $226 million between 1985 and 1988, or about 10 percent of the total cost of complying with the rule during that period (Nichols, undated) In fact, the actual use of lead banking was even greater than projected by EPA's analysis, and it seems likely that the overall costs were lower as a result More importantly, the incorporation of lead trading and banking provisions made it feasible for small, simple refineries to comply with the phasedown rule by buying lead rights from larger refineries Had this not been allowed, the prospect that some small refineries would be driven out of business would likely have resulted either in a delay in the phasedown, or a special exemption for small refineries that would have allowed them to continue to produce high-lead gasoline for some time

The incorporation of lead trading and banking provisions in EPA's rule allowed small refineries to stay in business without delaying the phase-down or permitting them to continue to produce high-lead gasoline

8. MONITORING COMPLIANCE

Sampling and checks, which confirm that the gasoline sold actually complies with the lead limits and quality specifications in effect, are an integral part of a lead phaseout strategy A statistical sampling procedure should be set up that is adequate to ensure that any significant cheating or noncompliance is detected To guard against adulteration or smuggling, gasoline samples should be collected for analysis at retail service stations as well as at the refinery and/or port of importation As an additional check on lead additive use during the lead phaseout process, authorities may wish to establish special procedures for monitoring the importation and use of lead additives Since only a few chemical companies produce these extremely hazardous compounds, monitoring lead additive shipments should not be difficult

This chapter presents information on standard sampling and analytical procedures for lead, gasoline octane, and gasoline properties and composition, together with information on the laboratory equipment required and their costs

Sampling and checks on the importation and use of lead additives are used to detect cheating or non-compliance with a lead program, and to guard against the adulteration or smuggling of gasoline

The Steps In Monitoring Compliance

1 Identify monitoring needs

The monitoring requirements implementers should identify include the number of samples and the types of locations to be sampled to ensure adequate coverage This will involve a tradeoff between enforcement costs and adequacy of control

2 Identify legal authority/requirements for monitoring gasoline composition

Implementers should identify the legal authority that will monitor fuel composition, including any ongoing monitoring efforts

3 Identify institutional and physical requirements for monitoring

In this step, implementers should identify the equipment and personnel required for the monitoring program and the sources of financing for any new equipment or personnel needed

4 Identify responsibilities for monitoring and enforcement

Here, implementers should identify the institutional responsibilities of the personnel identified in Step 3

5 Plan and implement gasoline monitoring and enforcement program

Based on the information developed, the implementer should work with the organizations responsible for enforcement to prepare a detailed plan for the enforcement program, obtain any necessary authorizations or approvals, and implement the program

6 Identify and prosecute violators

The program should include provisions for identifying and prosecuting individuals who are violating the lead phasedown requirements

7 Follow up to ensure program effectiveness

Once the program is underway, the implementer should follow up to confirm that monitoring is being done according to the plan

Previous Page Blank

8 1 Gasoline Sampling

The samples collected must be truly representative of the gasoline in question A detailed description of the procedures for obtaining representative samples of gasoline for Reid vapor pressure measurements can be found in the U S Code of Federal Regulations (CFR 40, Part 80, Appendix D) The CFR can be accessed on the World Wide Web at www access gpo gov Gasoline samples obtained by these procedures can also be analyzed for other properties of interest

Recently, EPA proposed to modify Appendix D to allow the use of sampling procedures developed by the American Society for Testing and Materials (ASTM) The main standard for gasoline sampling is ASTM D-4057-95 (Standard for Sampling Petroleum and Petroleum Products) The other ASTM standards involved include D-4177-82 (Standard for Automatic Sampling), D-5842-95 (Standard Practice for Sampling and Handling of Fuels for Volatility Measurement), and D-5854-96 (Standard Practice for Mixing and Handling Liquid Samples of Petroleum and Petroleum Products)

8 1 1 Sampling Precautions

Numerous precautions are required to ensure that the character of the samples is representative These depend upon the tank, carrier, container or line from which the sample is being obtained, the type and cleanliness of the sample container, and the sampling procedure that is to be used A summary of the sampling procedures and their application is presented in Table 20 Each procedure is suitable for sampling a material under definite storage, transportation, or container conditions The basic principle of each procedure is to obtain a sample in such manner and from such locations in the tank or other container that the sample will be truly representative of the gasoline

Table 20 Summary Of Gasoline Sampling Procedures And Applicability

Type of Container	Procedure
Storage tanks ship and barge tanks tank cars tank trucks	Bottle sampling
Storage tanks with taps	Tap sampling
Pipes and lines	Continuous line sampling
Retail outlet and wholesale purchaser consumer facility storage tanks	Nozzle sampling

8 1 2 Sampling Terms

A description of terms shows the complexity involved in sampling

- *Average sample* is one that consists of proportionate parts from all sections of the container
- *All-levels sample* is one obtained by submerging a stoppered beaker or bottle to a point as near as possible to the draw-off level, then opening the sampler and raising it at a rate such that it is 70-85 percent full as it emerges from the liquid An all-levels sample is not necessarily an average

sample because the tank volume may not be proportional to the depth and because the operator may not be able to raise the sampler at the variable rate required for proportionate filling The rate of filling is proportional to the square root of the depth of immersion

- *Running sample* is one obtained by lowering an unstoppered beaker or bottle from the top of the gasoline to the level of the bottom of the outlet connection or swing line, and returning it to the top of the gasoline at a uniform rate of speed such that the beaker or bottle is 70-85 percent full when withdrawn from the gasoline
- *Spot sample* is one obtained at some specific location in the tank by means of a thief bottle or beaker
- *Top sample* is a spot sample obtained 6 inches (150 mm) below the top surface of the liquid
- *Upper sample* is a spot sample taken at the mid-point of the upper third of the tank contents
- *Middle sample* is a spot sample obtained from the middle of the tank contents
- *Lower sample* is a spot sample obtained at the level of the fixed tank outlet or the swing line outlet
- *Clearance sample* is a spot sample taken 4 inches (100 mm) below the level of the tank outlet
- *Bottom sample* is one obtained from the material on the bottom surface of the tank, container, or line at its lowest point
- *Drain sample* is one obtained from the draw-off or discharge valve Occasionally, a drain sample may be the same as a bottom sample, as in the case of a tank car
- *Continuous sample* is one obtained from a pipeline in such a manner that it gives a representative average of a moving stream
- *Mixed sample* is one obtained after mixing or vigorously stirring the contents of the original container, and then pouring out or drawing off the quantity desired
- *Nozzle sample* is one obtained from a gasoline pump nozzle which dispenses gasoline from a storage tank at a retail outlet or a wholesale purchaser-consumer facility

Other important aspects to be considered are sample containers (including cleaning procedure), sampling apparatus, time and place of sampling, handling, shipping, labeling, and testing procedures

The directions for sampling cannot be made explicit enough to cover all cases Extreme care and good judgment are necessary to ensure samples that represent the general character and average condition of the material Clean hands are important Clean gloves may be worn but only when absolutely necessary, such as in cold weather, when handling materials at high temperature, or for reasons of safety Select wiping cloths so that lint is not introduced, contaminating samples

8 2 Measuring Lead In Gasoline

EPA has approved three methods for measuring lead in gasoline For details on any of these methods, consult The United States Code of Federal Regulations Title 40 Part 80, Appendix B This document can be downloaded from the World Wide Web at 1) http //www legal gsa gov, or 2) http // www epa gov/docs/epacfr40/chapt-I info/

In using any of the three methods, care should be taken to collect and store samples in containers that will protect them from changes in the lead content of the gasoline such as from loss of volatile fractions of the gasoline by evaporation or leaching of the lead into the container or cap Since metal cans are sometimes sealed with lead solder, it is preferable to collect samples in glass bottles If samples have been refrigerated, they should be brought to room temperature (25° Celsius) prior to analysis

Also, gasoline is extremely flammable and should be handled cautiously and with adequate ventilation The vapors are harmful if inhaled, and a prolonged breathing of vapors should be avoided Skin contact should be minimized

8 2 1 Standard Method Test By Atomic Absorption Spectrometry

This method determines the total lead content of gasoline The method compensates for variations in gasoline composition and is independent of lead alkyl type The gasoline sample is diluted with methyl isobutyl ketone (MIBK) and the alkyl lead compounds are stabilized by reaction with iodine and a quarternary ammonium salt The lead content of the sample is then determined by atomic absorption flame spectrometry at 2833 Å, using standards prepared from reagent-grade lead chloride Using this treatment, all alkyl lead compounds give an identical response

The equipment needed to perform this method includes an atomic absorption spectrometer, volumetric flasks, pipettes, and micropipettes This method is now rarely used, since automatic equipment for lead determination is readily available

8 2 2 Automated Method Test By Atomic Absorption Spectrometry

This method is very similar to the one above, and has largely replaced it in practice The main difference is that an automated system is used to perform the diluting and the chemical reactions, and to feed the products to the atomic absorption spectrometer This method requires an auto-analyzer system and an atomic absorption spectroscopy detector system

8 2 3 X-Ray Spectrometry

As with the other two methods, this determines the total lead content of gasoline It is insensitive to variations in gasoline composition, and is independent of lead alkyl type

A portion of the gasoline sample is placed in an appropriate holder and loaded into an X-ray spectrometer The ratio of the net X-ray intensity of the lead L alpha radiation to the net intensity of the incoherently scattered tungsten

L alpha radiation is measured The lead content is determined by reference to a linear calibration equation that relates the lead content to the measured ratio The incoherently scattered tungsten radiation is used to compensate for variations in gasoline samples

The primary apparatus needed for using this method is an X-ray spectrometer It is recommended that the optical path in the spectrometer be helium instead of air The use of air produces ozone, and could also pose flammability problems if a container with a sample of gasoline ruptures

8 3 Octane Measurements

There are two ASTM methods for measuring the antiknock quality in gasoline ASTM D 2699 (Test for Knock Characteristics of Motor Fuels by the Research Method), and ASTM D 2700 (Test for Knock Characteristics of Motor and Aviation-Type Fuels by the Motor Method) Both methods require the use of a special single-cylinder laboratory engine with a variable compression ratio, known as a CFR engine The Research Method (which results in the RON) simulates driving under mild conditions, while the Motor Method (which results in the MON) simulates more severe conditions, as well as operation under load or at high speeds Both methods relate the knocking characteristics of the test gasoline to that of two pure fuels iso-octane (2,2,4 tri-methyl pentane) and n-heptane These are defined to have octane numbers of 100 and zero, respectively

The octane number of a gasoline is measured by determining the compression setting on the laboratory engine at which the knock begins to occur when operating on the test gasoline This is then compared to the compression settings at which known mixtures of iso-octane and n-heptane begin to knock The octane value is equal to the percentage of octane in the mixture Thus, a gasoline blend that knocks at the same compression setting as a mixture of 80 percent iso-octane and 20 percent n-heptane would have an octane rating of 80

8 4 Gasoline Composition

This section summarizes the measurement of the reformulated gasoline fuel parameters followed by EPA The entire document is the United States Code of Federal Regulations (CFR) Title 40 Part 80, including appendixes A through G This document is available through the World-Wide Web at the following addresses (other addresses are also available)

http //www legal gsa gov, or
http //www epa gov/docs/epacfr40/chapt-I info/

ASTM documents can be obtained through the American Society for Testing and Materials ASTM can be contacted via the World-Wide Web at the following address http //www astm org, or at their physical address ASTM, 100 Barr Harbor Drive, West Conshohocken, Pennsylvania USA 19428-2959

8 4 1 Sulfur

Sulfur content is determined using ASTM standard method D–2622–92, entitled 'Standard Test Method for Sulfur in Petroleum Products by X-Ray Spectrometry"

8 4 2 Olefins

Olefin content is determined using ASTM standard method D–1319–93, entitled ' Standard Test Method for Hydrocarbon Types in Liquid Petroleum Products by Fluorescent Indicator Adsorption " The gas chromatographic method described below for aromatics can also be used to determine olefin content

8 4 3 Reid Vapor Pressure (RVP)

Reid vapor pressure is determined using the procedure described in the U S CFR Title 40 Part 80, Appendix E, Method 3 (Evacuated Chamber Method) in which a known volume of air-saturated fuel at 32-40° F (0-4 4° C) is introduced into an evacuated, thermostatically controlled test chamber, the internal volume of which is or becomes five times that of the total test specimen introduced into the test chamber After the injection, the test specimen is allowed to reach thermal equilibrium at the test temperature, 100° F (37 8° C) The resulting pressure increase is measured with an absolute pressure measuring device whose volume is included in the total of the test chamber volume The measured pressure is the sum of the partial pressures of the sample and the dissolved air The total measured pressure is converted to Reid vapor pressure by use of a correlation equation

8 4 4 Distillation

Distillation parameters are determined using ASTM standard method D–86–90 entitled "Standard Test Method for Distillation of Petroleum Products ' EPA has determined, however, that the figures for repeatability and reproducibility given in degrees Fahrenheit in Table 9 in the ASTM method are incorrect, and are not to be used

8 4 5 Benzene

Benzene content is determined using ASTM standard method D–3606–92, entitled "Standard Test Method for Determination of Benzene and Toluene in Finished Motor and Aviation Gasoline by Gas Chromatography", except that instrument parameters must be adjusted to ensure complete resolution of the benzene, ethanol and methanol peaks because ethanol and methanol may cause interference with ASTM standard method D–3606–92, when present

8 4 6 Aromatics

Aromatics content is determined by gas chromatography identifying and quantifying each aromatic compound as set forth in either of the two methods described in the U S CFR Title 40, Part 80 46 The equipment used is an atomic gas mass spectrometer detector

The first method for determining aromatic content involves developing a three-component internal standard, where a curve is developed using calibration points for each level of a particular peak in the instrument's calibration table The response of the compound in a sample is divided by the response of the internal standard to provide a response ratio for that compound in the sample A corrected amount ratio for the unknown is calculated using the curve fit equation determined earlier Finally, the amount of the aromatic compound is equal to the corrected amount ratio times the amount of the internal standard The total aromatics in the sample is the sum of the amounts of the individual aromatic compounds in the sample

The second method uses a percent normalized format to determine the concentration of the individual compounds No internal standard is used in this method The calculation of the aromatic compounds is done by developing calibration curves for each compound using the type fit and origin handling specified in the instrument's calibration table The percent normalized amount of a compound is calculated using an equation, where the total aromatics is the sum of all the percent normalized aromatic amounts in the sample

This method allows the quantification of non-aromatic compounds in the sample Correct quantification can only be achieved, however, if the instrument's calibration table can identify the compounds that are responsible for at least 95 volume percent of the sample

Last, there is an alternative test method (allowed by EPA prior to September 01, 1998) ASTM standard method D-1319-93, entitled "Standard Test Method for Hydrocarbon Types in Liquid Petroleum Products by Fluorescent Indicator Absorption " This method, which is still used by EPA for determining olefin content, is considerably less expensive, but less accurate in identifying aromatic compounds

8 4 7 Oxygen And Oxygenate Content Analysis

Oxygen and oxygenate content are determined by gas chromatography, using an oxygenate flame ionization detector (GC-OFID) as set out in U S CFR Title 40, Part 80 46 The equipment needed for performing this method includes a gas chromatograph equipped with an oxygenate flame ionization detector, an autosampler (highly recommended), a non-polar capillary gas chromatograph column (J&W DB-1 or equivalent), an integrator to process the gas chromatograph signal, and a positive displacement pipet

This method is a single-column, direct-injection gas chromatographic technique for quantifying the oxygenate content of gasoline, where a sample of gasoline is spiked to introduce an internal standard, mixed, and injected into a gas chromatograph (GC) equipped with an oxygenate flame ionization detector (OFID) After chromatographic resolution, the sample components enter a cracker reactor in which they are stoichiometrically converted to carbon monoxide (in the case of oxygenates), elemental carbon, and hydrogen The carbon monoxide then enters a methanizer reactor for conversion to water and methane Finally, the methane generated is determined by a flame ionization detector (FID)

Because gasoline is extremely flammable and its vapors are harmful if inhaled, it must be handled cautiously and only in areas with adequate ventilation

Special care should be taken when collecting and handling gasoline samples Samples must be collected and stored in containers which will protect them from changes in the oxygenated component contents of the gasoline, such as loss of volatile fractions of the gasoline by evaporation If samples have been refrigerated, they must be brought to room temperature (25° dC) prior to analysis Also gasoline is extremely flammable and should be handled cautiously and with adequate ventilation The vapors are harmful if inhaled and prolonged breathing of vapors should be avoided Skin contact should be minimized

8 5 Laboratory Equipment And Costs

Table 21 lists the laboratory equipment most commonly used in lead sampling and the average prices of the equipment

Table 21 Prices For Analytical Equipment

Equipment	Cost ($US)
Lead	
Method 1 (manual)	
Atomic absorption spectrometer	N/A
Method 2 (automatic)	
Atomic absorption spectrometer system	$20 000
Method 3 (can measure sulfur too)	
X ray spectrometer (helium optical path)	$110 000 $200 000
Sulfur (can measure lead too)	
X ray spectrometer	$80 000 $200 000
Olefins	
Fluorescent indicator adsorption	$200
Reid Vapor Pressure	
Grabner	$15 000
Distillation	
Special distillation apparatus (manual)	$12 000
(automatic)	$15 000 $20 000
Benzene and Oxygenates	
Gas chromatograph + OFID	$50 000
Aromatics	
Gas mass spectrometer	$80 000

9. CONDUCTING FOLLOW-UP EVALUATION AND REPORTING

Followup monitoring and evaluation are needed to ensure that the lead phaseout program achieves its goals, and to demonstrate to decision makers and the public that these goals have been achieved

> This chapter reviews the procedures available for measuring lead concentrations in human blood and ambient air

The Steps In Follow-Up Evaluation And Monitoring

1 Monitor trends in ambient lead and other air pollutants
In addition to monitoring changes in the lead content of gasoline, implementers should assess the changes in concentrations of lead and other pollutants in ambient air

2 Monitor trends in human exposure to lead
Implementers should also assess the changes in the distribution of blood lead concentrations among the exposed population, particularly children, that result from the phaseout program

3 Evaluate the effectiveness of the phaseout program
Implementers should measure the effectiveness of the program in terms of declines in lead concentrations in both air and human blood

4 Identify the cause of any problems found
In most cases, the followup evaluation will demonstrate that lead concentrations in air and human blood have declined significantly Should the monitoring show that lead concentrations in either the air or the exposed population have not declined as expected, it may indicate that other sources of lead exist and need to be identified

5 Communicate results to the public, politicians, and legal authorities
The information on declining levels of lead concentrations in air and human blood should be communicated to decision makers and the public in order to maintain their support for the phaseout program

9 1 Measuring Lead Concentrations In Blood

Measuring blood lead concentrations can help to track the reduction in average blood lead concentrations due to the phaseout of lead in gasoline In addition, these tests can identify individuals – especially children – who are at risk of health damage due to abnormally high blood lead concentrations Such concentrations may result either from excessive exposure to airborne lead, or exposure to other sources such as lead-based paint, improperly glazed pottery, or lead water pipes Once these high-risk individuals are identified, they or their parents can be counseled to reduce their exposure, and medical treatment can be initiated if the blood lead concentrations indicate that treatment is warranted

Recommendations for blood lead screening have been given by the American Academy of Pediatrics (1998) The standard procedure for blood lead measurement requires a blood sample collected by venipuncture With

Blood lead laboratories should establish careful procedures to ensure that their blood samples are accurate

suitable precautions, capillary (fingerstick) blood samples can also be used, but these carry a greater risk of contamination by environmental lead that may be present on the skin (Parsons et al , 1997) The glassware, needles, and chemical reagents used for collecting and storing blood must be lead-free, and each batch should preferably be checked for lead contamination before use Suitable supplies are available from a number of commercial medical suppliers

Because of the ubiquity of lead in the environment, the contamination of blood lead samples is a common problem, and careful quality assurance and quality control procedures are essential These should include analyses of blank samples to identify contamination in the sampling and analysis process Blood lead laboratories should establish careful procedures, and participate in routine proficiency testing to verify the accuracy and precision of their blood lead measurements The U S Centers for Disease Control operates a blood lead level laboratory reference system, it provides blood samples having accurately known lead concentrations to more than 250 laboratories around the world (CDC, 1998) These can be used to verify calibrations and as reference samples for quality control purposes A list of blood lead laboratories certified by the U S Occupational Safety and Health Administration is available on the World-Wide Web at www osha-slc gov/OCIS/toc_bloodlead html

The World Health Organization has summarized analytical techniques for lead in blood (WHO, 1995) Commonly used techniques include atomic absorption spectrometry, graphite-furnace atomic absorption spectrometry, anode-stripping voltimetry, and inductively-coupled plasma atomic emission spectrometry X-ray fluorescence spectroscopy can also be used The National Institute of Standards and Technology uses isotope-dilution mass spectrometry to establish accurate target values for its blood lead reference materials The U S Centers for Disease Control uses a similar method – inductively coupled plasma isotope-dilution mass spectrometry (U S CDC, 1998)

9 2 Measuring Lead In Ambient Air

Lead concentrations in ambient air are measured by collecting total suspended particulate matter on a glass-fiber filter for 24 hours using a high-volume air sampler, and then analyzing the collected particulate matter for lead The analysis of the 24-hour samples may be performed either for individual samples or composites of the samples collected over a calendar month or quarter Lead in the particulate matter is solubilized by extraction with nitric acid (HNO_3), facilitated by heat or by a mixture of HNO_3 and hydrochloric acid (HCl) facilitated by ultrasonication The lead content of the sample is analyzed by atomic absorption spectrometry The ultrasonication extraction with HNO_3/HCl will extract metals other than lead from ambient particulate matter For a complete description of this method, refer to the United States Code of Federal Regulations Part 50, Appendix G

The typical range of lead concentrations that can be analyzed using this method is 0 07 to 7 5 µg Pb/m^3, and the typical sensitivity (for a 1 percent change in absorption) is 0 2 and 0 5 µg Pb/ml for the 217 0 and 283 3 nanometer lines, respectively A typical lowest detectable level is 0 07 µg Pb/m^3

10. CONDUCTING PUBLIC EDUCATION

If a lead phaseout strategy is to be successful, it must gain the public's understanding and acceptance For this reason, implementers commonly include public education programs as part of their lead phaseout strategies These programs consist of efforts to generate public interest in, and understanding of, a particular message They can be designed and conducted by the government alone or in cooperation with non-governmental organizations (NGOs) and/or the private sector While they are often developed for a broad audience, they can also include media communications targeted to a range of differing public opinions More specific outreach and training programs can be targeted to auto mechanics and service station attendants (Lovei, 1998)

The success of a lead phaseout strategy hinges on public acceptance

This chapter describes how to establish goals and develop specific strategies for implementing a public education program for lead phaseout It also reviews media and other techniques for public communication

The Steps In A Public Education Program

1 Define public education goals

An effective public education program will help assure public support for the lead phaseout policy The program goals ('the desired results") should include 1) increasing awareness and understanding of the health and developmental problems caused by exposure to lead and 2) changing public perceptions about the ability of older vehicles to use unleaded gasoline and the maintenance benefits of reducing or eliminating lead

2 Develop public education strategy

Once the goals are established, implementers must devise specific strategies for achieving these goals Because strategies are likely to differ for different audiences, it is important to categorize "the public" so that messages can be tailored to the specific needs and concerns of different groups (e g parents, taxi cab drivers, service station operators)

3 Identify potential communication media

Next, implementers should identify appropriate communication media choosing the most effective media for each audience they want to reach

4 Assign responsibilities for communication and public education

In this step, implementers assign responsibilities for communication and public education to the appropriate organization The organization(s) can include government agencies, NGOs public relations firms, and others

5 Follow up to assess the program's effectiveness

During and after the public education process, followup studies should be conducted These should assess the effort's effectiveness and determine whether further public education efforts are required

6 Begin public education activities

To obtain the best results implementers should initiate these activities well in advance of the actual lead phaseout program

10 1 Defining The Goals Of The Public Education Strategy

A public education strategy can both build public support for phasing out lead in gasoline and reduce opposition to the phaseout strategy

The public s understanding of a lead phaseout strategy's policies and programs is important in building political support for the strategy and educating consumers to change their fueling and auto maintenance habits Public education programs for lead phaseout generally have two important goals

- Increasing awareness of the health risks associated with using leaded gasoline and the significant social benefits of policy measures to phase out lead from gasoline
- Changing public perceptions that unleaded fuel will adversely affect vehicle performance and reduce gas mileage

It is recommended that implementers evaluate the public's general level of awareness of lead's adverse health effects as well as the level of concern and misperception about the effects of unleaded fuel before significant resources are spent on the lead phaseout program itself as well as related public outreach efforts Because resources are typically limited for outreach activities, it is important to understand the audience's level of awareness and understanding as fully as possible before committing to a specific strategy or approach For example, if it is determined that opposition to unleaded fuel is less than anticipated, then relatively fewer dollars will need to be devoted to dispelling the myths related to poor performance

Before spending large sums on a public outreach effort, implementers should evaluate the public's general awareness about lead's adverse health effects and their concerns and misperceptions

Several tools exist for gauging public awareness and attitudes, including public opinion surveys and focus groups

Public opinion surveys These can be expensive and time consuming, but offer a systematic way to assess widespread public attitudes as well as to evaluate the reactions of different segments of the public to proposed policies or programs A formal effort involves administering a survey to a sample of people through a written questionnaire or through in-person or telephone interviews The sampling method is carefully chosen to be statistically representative of the public, and the survey results require statistical analysis The results can be used to identify public concerns, gather information on the likely level of public acceptance of a policy or program, and also to develop effective messages for public information materials and a media strategy When public opinion surveys are repeated over time, they can help keep the government informed of changes in public knowledge of a policy or program, as well as any accompanying changes in public preferences

An informal survey is less expensive and can also be useful in identifying public attitudes However, its results may not be statistically valid

Focus groups (small group discussions with professional facilitators who gather opinions or perspectives) are an effective way of gathering information on public opinions and concerns regarding broad policy or program goals and impacts They can be especially useful for obtaining more detailed information when designing a media strategy or strategies for specific groups (see Section 8 2) Focus groups are not a suitable method for wide public participation or to disseminate information

10 2 Developing A Public Education Strategy

Once implementers articulate the goals and develop a sound understanding of the public's current level of awareness, they can begin to develop approaches to increase awareness and understanding

The audiences For a strategy to be most effective, it is useful to break up the general public into different groups or "audiences," defined on the basis of their specific concerns, driving or vehicle use patterns, and access to information Implementers should also review who is affected by the lead phaseout strategy indirectly, as well as those social groups or businesses that may be difficult to reach

The table below characterizes the types of audiences that should be targeted in the public education program Each audience segment has different concerns or issues, and each plays a different role in the overall success of the lead phaseout program

Audience Segment	Specific Concerns or Issues	Potential Role
General Public	Doesn t perceive lead as a health threat	Can be a powerful force lobbying for change
Parents	Concerned about their childrens health and welfare	Can be instrumental in pushing for lead phaseout
Motorists	Concerned about keeping gasoline prices low Concerned about changes that would adversely affect vehicle performance or gas mileage	Account for major share of gasoline consumption as well as new/used car purchases and demand for vehicles and maintenance services
Service Station Operators	Concerned that the need to supply unleaded gasoline will disrupt normal opera tions and increase costs of doing business	Because of role in the supply chain can be key to delivering public education messages and to the overall program s success
Fleet Owners and Operators (e g taxi cab drivers government agencies)	Particularly concerned about keeping operating costs low vehicle performance and access to supplies	Can represent a significant portion of the driving public

The message Public education efforts should inform the general public and specific audience segments about the serious health risks from human exposure to lead Education efforts should also inform the public that leaded gasoline is the main source of lead in the environment Information about the neurotoxic impacts of lead in gasoline, especially its impacts on the IQ development of children, can be very powerful in influencing public opinion and consumer behavior Increased public understanding of the significant social benefits expected from a phaseout strategy, in terms of greatly reduced health and developmental problems from exposure to lead, can influence consumer behavior and also alleviate public concerns

Public education messages should stress both the negative health effects of lead in gasoline and the positive benefits society can realize from phasing it out They should also address public concerns about automobile performance and the economic impacts of a lead phaseout strategy

Sample Messages On Lead's Health Risks And The Expected Social Benefits From A Lead Phaseout Strategy

- Lead exposure in children results in neurodevelopmental damage, resulting in lower intelligence, increased incidence of behavioral problems, increased risk of learning disabilities, and increased risk of failure in school
- The damaging effects of lead on the cognitive function of children begin to occur at very low levels of lead exposure
- Reducing the adverse health impacts of lead exposure in children can be expected to result in an increase in average intelligence and improvements in the learning performance of future children, thus improving their lifetime productivity
- Lead exposure in adults is linked to increased blood pressure, leading to increases in the incidence of hypertension, cardiovascular illness, stroke, and premature death

A public education strategy should also identify and address public concerns about automobile performance and the economic impacts of a lead phaseout strategy Many of the public's concerns may have been exaggerated by vested interests in continuing the sale of leaded gasoline, or by an initial lack of practical or scientific information to support the phaseout strategy

Sample Messages On The Effects Of Unleaded Gasoline On Vehicle Performance

- Unleaded gasoline does not adversely affect an engine's performance, and generally reduces maintenance costs
- Even older engines with soft valve seats are unlikely to suffer adverse effects unless they are driven continuously at high speeds for long distances For the few engines that do suffer valve seat problems, replacing the cylinder head or valve seats will correct the problem and keep it from recurring
- Catalytic converters are not necessary for a vehicle to use unleaded gasoline
- Vehicles using unleaded gasoline require far less frequent spark plug changes
- Price and supply information can help allay concerns that unleaded gasoline will be too expensive or unavailable

Training Last, targeted training programs for auto mechanics and service station operators can be an effective way to assist consumers in reducing the sensitivity of old cars to the use of unleaded gasoline Such training can facilitate the proper engine modifications and maintenance of older cars with engines not designed for unleaded gasoline Mechanics and service station operators can also help disseminate information to consumers about proper fueling practices

10 3 Media And Other Techniques For Public Communication

A wide variety of media and other techniques are available to communicate with the public, as well as specific groups, and deliver public education strategies Agencies should develop attractive public information materials that convey the appropriate messages or information in a fast, concise, and clear way The wider availability of desktop publishing and increasingly accessible communication technologies offer government agencies more varied ways to capture the public s interest effectively and educate them about policies and programs

Agencies should develop attractive public information materials that convey the messages quickly, concisely, and clearly

Some Of The Techniques Available For Public Education Programs

- Newspaper inserts and articles
- Public service announcements and media advertising
- Brochures, fliers, and fact sheets
- Posters and billboards
- Information hotlines
- Special techniques

Public information materials are often designed to reach a broad public beyond those who are directly affected An emphasis on concise, informative, visual presentations makes it easier to reach people who have only a few moments to catch the message Technical information and issues should be translated into terms that the public can easily understand In countries where language may be a political issue, using multilingual materials can demonstrate that the government is trying to reach out to all social groups

Technical information should be presented in terms that people can easily understand

In other instances, the wide distribution of public information materials is impractical The government can make some materials (e g , summaries of reports, videos, exhibits) available upon request Other materials, such as point-of-sale information for service stations, can be targeted and customized for distribution to specific groups such as motorists

Agencies are encouraged to seek professional assistance in crafting effective messages and completing the design and artwork needed to convey messages in the most powerful and effective manner

All outreach materials should provide contact information so that individuals with additional questions can call for more information or assistance More detailed descriptions of the various techniques are provided below

Newspaper inserts and articles can be extremely effective in reaching the general public as well as specific groups They are also an inexpensive way to disseminate information By providing factual information in press releases, a government agency can help reporters assemble articles or news stories that can counteract

Media coverage creates opportunities for public education, but can also be used by vested interests or political opposition to seize on and distort issues related to a lead phaseout strategy

misleading information put forward by special interest groups that may be opposed to lead phaseout [6] Although government agencies have little control over news stories before they are published or broadcast, they may be able to avoid spending valuable resources explaining a message or trying to reshape public opinion if they hold events targeted at the media or issue press releases with easy-to-understand information

Public service announcements In addition to providing detailed information that can be used as "news" in articles, government agencies can place ads or public service announcements in newspapers and other media Unlike articles, the ads would provide broad, simple messages on the benefits of lead phaseout or the specifics of the government's lead phaseout strategy (e g , price information, location of service stations offering unleaded gasoline) Often, the news media will allow the government to place ads free of charge or at a discount More elaborate media advertising schemes can to be expensive and must be used carefully and efficiently A minimum media strategy would include a central message via a public service announcement A more high-profile media campaign would involve a series of radio and television ads during prime time As consensus builds for the lead phaseout strategy, stakeholders and government agencies can cooperate in a media strategy to inform and educate the public through features and ads on television and radio, and in newspapers

Brochures, fliers and fact sheets can be effective education tools and are usually targeted at a specific group For example, fact sheets explaining the adverse effects of lead on the development of children can be prepared and distributed at schools, health clinics, daycare facilities and other locations serving the needs of parents and children Brochures providing detailed information related to vehicle performance should be targeted at motorists and are best distributed at gasoline stations or to companies or agencies operating vehicle fleets

Posters and billboards are also extremely good mechanisms for spreading the main themes of the phaseout strategy positive effects on the neurological development of children, minimal effects on vehicle performance, etc Messages must be presented in a simple, clear, concise form, and their effectiveness can be greatly enhanced by the use of color and artwork, or linkages to popular themes or personalities

Posters can be widely distributed and effectively displayed in service stations, public buildings, buses and other mass transit, schools, and places of worship

Information hotlines can be very useful, especially in the early days of the lead phaseout strategy's implementation By providing a number motorists can call for information on everything from sales locations, price differentials, and timing, to engine performance, government agencies can reduce opposition to the program caused by uncertainty or lack of knowledge However, it is extremely important

[6] Government agencies should be aware of the opportunities that media coverage creates for public education but also of the dangers if vested interests or political opposition seize on and distort issues related to a lead phaseout strategy and discredit the program in the eyes of the public For example in some countries myths about engine damage from the use of unleaded gasoline have been fostered or promoted in the media by organizations with vested interests in the sale of leaded gasoline

for information hotlines to be fully operational during the stated hours of operation and staffed by competent, knowledgeable individuals

Special techniques, including hands-on-demonstrations, videos and other devices, can be effective for workshops and targeted outreach efforts For example, workshops or training courses may be the most effective method of educating service station operators and mechanics on the effects of unleaded fuel on engine performance Videos or hands-on demonstrations could instruct mechanics on how to perform vehicle maintenance to improve engine performance Educational videos on the effects of lead on air quality and human health could be developed for use in schools or with parent groups These techniques are generally more expensive, but are likely to be the most effective in increasing the awareness and building the support of such influential groups as service station operators and mechanics

Telephone hotlines can be very useful in reducing opposition to a lead phaseout program, but they must be fully operational during their stated hours of operation and staffed by competent, knowledgeable individuals

10 4 Assigning Responsibility For Public Education

The agency responsible for implementing lead phaseout should also retain overall responsibility for the public education program to ensure that the outreach activities and messages support the technical strategy, both in terms of the timing of specific messages and activities, and the content of these messages However, the responsible agency should seek the assistance of relevant public affairs agencies, non-governmental organizations, industry associations, and the communications departments of universities These groups typically have access to particular audience segments as well as expertise in managing public education programs or media campaigns They can be useful, as well as inexpensive, sources of assistance to government agencies, which often lack the technical expertise and resources to carry out elaborate public outreach programs

The responsible agency should consider setting up a special "public education committee" consisting of senior representatives from the various groups listed above This committee would oversee the development of the outreach strategy and manage the activities carried out by individual group members

10 5 Tracking Progress And Measuring Effectiveness

It is important to evaluate the program's effectiveness so that activities can be reshaped or revised as necessary over the course of the program

A number of methods can be used to monitor progress and measure the program's effectiveness Certainly, purchases of unleaded gasoline may be a direct measure of the program's effectiveness If an outreach program is successful (and the overall phaseout strategy is logical and effectively addresses key pricing and supply issues), then purchases of unleaded gasoline should increase over an initial start-up period, while the total consumption of lead additives should decline

The government also may want to conduct additional public opinion surveys six months to one year after the start of the public outreach program to determine the program's effect on public attitudes and awareness If an initial survey was conducted, the agency can use the same survey instrument to evaluate effectiveness

10 6 The Timing Of Public Education Activities

It is recommended that agencies begin public education efforts as early as possible – well before actual implementation of the lead phaseout program, so that the public is informed in advance of the changes that will take place, has time to adjust to these changes, and can accept them as improvements and benefits rather than needless inconveniences or, worse, expensive burdens to be avoided Even the best phaseout program can be a total failure if it comes as a surprise to the general public

Public education efforts should begin well before the implementation of the lead phaseout program starts

Ideally the outreach program should evolve in concert with the development of the lead phaseout strategy itself so that the public is kept informed of the strategy's key elements Over time, the outreach program should incorporate more and more information on the specifics of the phaseout strategy itself and the basis for the decisions that are made Preferably these decisions will be based on input from key stakeholders (see Chapter 11), which will reduce public opposition

General education effort can start with the use of broad messages conveyed through public service announcements, posters and billboards that are widely distributed These messages should convey the broad themes – improved childrens' health and welfare, and no adverse effects on vehicle performance These broad messages can be supported by more detailed press articles that provide the rationale for phaseout, the benefits, the timing, and descriptions of the program (timing, availability, price, etc)

By the time the phaseout strategy is put in place, the education program should be focusing on providing information that enhances implementation (e g , providing locations where unleaded fuel is being sold, providing price information) and monitoring effectiveness

11. INVOLVING KEY STAKEHOLDERS IN THE DEVELOPMENT OF A LEAD PHASEOUT STRATEGY

Gaining the concensus of the stakeholders in a lead phaseout program is critical to the program's success

Stakeholder involvement is an essential part of a lead phaseout strategy, and should be incorporated into the process from the very beginning Although stakeholder involvement is closely linked to public education and outreach (see Chapter 10), it differs in that it seeks to involve key parties in the decision making process Public education and outreach, on the other hand, seek to inform the public and key groups about the need for the program and how it will work

Many of the key stakeholder groups are the same as the audiences identified in the previous chapter and include parties that are most interested in, and affected by, a lead phaseout program, including government agencies, gasoline refiners and distributors, service stations owners and operators, and non-government organizations (NGOs) Gaining the support of these stakeholders is critical to the successful development and implementation of a lead phaseout strategy By consulting these parties and involving them in the decision-making process, stakeholders will feel that they "own" both the process and its outcomes, and are less likely to oppose the program once it is implemented

> This chapter summarizes stakeholder involvement strategies, which include both stakeholder identification and outreach components

The Steps In Stakeholder Consultation And Involvement

1 Identify stakeholders
Here, implementers should identify the program's stakeholders the individuals and organizations whose interests will be most affected

2 Identify strategy for stakeholder involvement
Implementers should next design a process for including the program's stakeholders in the strategy's development and implementation

3 Communicate risk assessment and benefit estimates
Education is a key component of stakeholder involvement Stakeholders must understand the need for the program, its benefits and its costs

4 Communicate/consult on alternative phaseout strategies
Ideally, implementers should be willing to consider alternative phaseout strategies that address stakeholder concerns and constraints

11 1 Stakeholder Identification

A first step in developing a stakeholder involvement program is to identify the various stakeholders whose interests will be affected by a lead phaseout strategy Often, the key stakeholders are the same organizations or people as the key audiences identified for a public education strategy (see Chapter 10) The

focus here, however, is engaging key stakeholders in a collaborative decision-making process Potential stakeholders include

- Government agencies and ministries (e g energy, environment health industry, transportation, finance, trade)
- Petroleum refiners
- Automobile manufacturers and importers
- Gasoline distributors and retailers
- Fleet owners and operators
- Non-government organizations
- Motorists

The key stakeholders for a lead phaseout program are often the same as the audience for the program's public education strategy (Chapter 10)

Each group is described briefly below

Government agencies Typically, many government agencies and ministries – both at the national and local levels – play a role in the phaseout of leaded gasoline These include agencies that set and control tax policies, environmental programs, vehicle registration, vehicle inspection and maintenance programs, and tariffs and duties on vehicle imports and fuel imports, and regulate refiners These agencies need to be involved in the process so that they understand what implications (if any) a phaseout program will have on their programs and vested interests

Petroleum refiners Oil refiners have a large stake in the decision making process for a lead phaseout strategy It is important to involve such powerful stakeholders in the consensus building process to reduce their opposition to a lead phaseout strategy Timing as well as the technical aspects of the phaseout options considered are significant issues for oil refiners because converting from leaded to unleaded fuel can have enormous cost implications for them Implementers should be sensitive to their issues and be willing to consider various incentive schemes or schedules to facilitate the conversion process

Automobile manufacturers and importers Auto manufacturers are not likely to be affected much by lead phaseout per se However, many countries may decide to take advantage of the opportunity presented by lead phaseout to introduce vehicle emission standards that are strict enough to require catalytic converters In this case, auto manufacturers will be very much affected, and it will be critical to obtain the support (or at least the acquiescence) of this stakeholder group Working with automobile manufacturers to devise a practical schedule for incorporating emissions controls in their automobile designs can promote broad support and reduce the potential for opposition from certain segments (those less able to quickly add controls or increase imports of vehicles so equipped) Auto manufacturers can actually support a phaseout strategy by endorsing the use of unleaded gasoline

Gasoline distributors and retailers These groups provide an important link in the supply chain and their support can greatly enhance the operation of a lead

phasedown program Retailers also play an important role in the public education process because of their direct access to motorists, so their issues should be carefully considered in the development of a strategy Retail service station owners and operators should be involved in the consensus building process because gaining their support for a lead phaseout strategy can assist in securing support from vehicle owners and operators Service station attendants or mechanics can assist with the public education strategy by disseminating information to motorists when they purchase gasoline or auto maintenance services

Fleet owners and operators particularly government vehicle fleets, can play a key role in a lead phaseout program by implementing measures first and demonstrating their effectiveness

Non-government organizations (NGOs), such as medical or public health associations, educational or teachers' associations, or environmental organizations, can facilitate consensus building Working with concerned members of the public, NGOs generally will support the significant social benefits of policies and programs to phase out lead from gasoline They can help explain the health risks associated with using leaded gasoline and build political support for a lead phaseout strategy

Motorists are also key stakeholders They must pay any price differentials or bear any service inconvenience that result from the strategy Motorists (or groups of motorists such as taxi cab drivers) may be represented by an NGO or association If so, representatives of these groups should be invited to participate in the decision making process

11 2 Stakeholder Involvement Strategies

After stakeholders are identified, implementers should design a process for disseminating information to them and involving them in the decision making process for the lead phaseout strategy The nature and extent of stakeholder involvement will vary depending on the institutional arrangements and industry practices in each country

The nature and extent of stakeholder involvement will vary depending on the institutional arrangements and industry practices in each country

The stakeholder involvement strategy should be closely linked with the public education strategy (see Chapter 10) to ensure a consistent and effective message The inputs stakeholders provide may, in some cases, identify the need for more public education, but also may identify real problems that must be addressed in designing a lead phaseout strategy Examples of issues where stakeholder involvement may help in building consensus for a lead phaseout strategy are

- Identifying the best technical options for phasing out lead in gasoline
- Evaluating the timing for implementing selected technical options
- Assessing the economic and behavioral impacts of pricing decisions and incentive policies
- Evaluating the "fit" between technical options and policy instruments
- Identifying monitoring, compliance and enforcement needs

Good organization and well-planned outreach are necessary for a stakeholder involvement program because they can help produce inputs that the government can use in decision making as well as facilitate consensus building Implementers should identify specific strategies to gain the participation of stakeholders Several methods are available to bring stakeholders together, provide them with information, and establish effective communications Selected examples are summarized in this section

Advisory groups An advisory group is a way to bring together a core group of stakeholders who have a strong interest in a lead phaseout strategy An advisory group should be composed of representatives from each of the key stakeholder groups (each should be given equal status in presenting and deliberating their ideas), along with representatives from government agencies Advisory groups provide a forum for the government to present proposed policies and programs, and bring stakeholder feedback and ideas into the process

Advisory groups usually meet regularly to discuss issues of concern and to reach agreement on recommendations as input to implementers Advisory group meetings can serve to educate stakeholders on technical issues, update them on progress or new issues identified, and provide an organized way for the government to learn and understand the positions of different groups An advisory group can also assist in outreach efforts to broaden a stakeholder involvement program

Public meetings are more effective if they are held early in the decision making process

Public meetings and hearings Implementers can use these vehicles to present information to stakeholders and the public, and obtain input from participants They can be tailored to specific issues or organized for specific groups of stakeholders with an interest in a lead phaseout strategy While public meetings are useful for exchanging information, public hearings typically are more formal events held prior to a specific decision point in developing policies and programs Public meetings are more effective if they are held early in the decision making process and if the government makes clear the link between the meetings' input and decision making If held too late in the process and not accompanied by other stakeholder involvement opportunities, stakeholders and the public may feel that their ideas and concerns will not be addressed A media strategy is important for effective public meetings to attract the widest possible audience Public education materials (see Chapter 10) can be distributed at a public meeting

Workshops These are designed as special meetings to inform stakeholders and seek input on a specific policy issue or program They usually involve a relatively small group of people, require advance registration or invitation, and provide an opportunity for people to participate intensively Typically, participants work on specific issues or concerns and are usually sent materials in advance to prepare for the workshop They can be very useful for educating groups on technical issues to enhance their ability to make informed decisions Input from workshops can be integrated into the larger stakeholder involvement process

The Role Of Public Awareness In Slovakia's Lead Phaseout

Slovakia's successful phaseout of leaded gasoline was due to the use of an incentive policy, which was later combined with a rapid phaseout approach to influence consumer behavior and to smooth the transition Different programs were put in place to combine the incentive policy with regulations to ensure the reduction of lead content in gasoline, and to support the use and import of cars with improved pollution characteristics Slovakia only has one refinery (Slovnaft), which facilitated the transition from the production of leaded to unleaded gasoline

At the beginning of the phaseout program in 1988, Slovnaft introduced a lubricant additive ANABEX® 99, which helped ease the transition and achieve lead levels of 0 15 g/l by 1989 (down from 0 25 g/l) Beginning in 1993, the Slovakian government enforced and made catalytic converters mandatory for both imported and domestic cars And beginning in 1995, only unleaded gasoline was sold at service stations These policies were accompanied by registration standards for new and imported vehicles that included the

- Capability to use unleaded gasoline without the use of lubricating additives
- Presence of a three-way catalytic converter
- Age of imported vehicles manufactured in 1985 or later

These initiatives were supported by strong information campaigns that informed and influenced consumers' behavior, and involved them in the lead phasedown process This rigorous, multi-faceted approach helped to overcome the problem of old vehicle fleets (most of which were over 15 years old) and the respective low turnover rates, thus giving the public an incentive to buy cars with catalytic converters (REC, 1998)

12. BIBLIOGRAPHY

Abt Associates, 1996 *Costs and Benefits of Removing Lead from Gasoline in Russia*, prepared for the U S EPA, Bethesda, MD

Abt Associates, Inc and Sobotka & Company, Inc , 1990 *Ranking Environmental Health Risks in Bangkok, Thailand*, prepared for the U S Environmental Protection Agency and the U S Agency for International Development, November

Alconsult International Ltd, 1996 *Estudio Concerniente a la Eliminacion de la Gasolina con Plomo en America Latina y el Caribe*, financed by the Canadian International Development Agency, Alberta, Canada

Alconsult International Ltd, 1998 *Harmonization of Fuels Specifications in Latin America and the Caribbean*, funded by The World Bank, Calgary, Alberta, Canada

Allsup, J E , 1987 *Effect of Low Levels of Lead and Alternative Additives to Lead on Engines Designed to Operate on Leaded Gasoline*, report no B-06725-2, prepared for the U S EPA, Office of Mobile Sources, Ann Arbor, MI

American Academy of Pediatrics, 1998 "Screening for Elevated Blood Lead Levels," *Pediatrics*, Vol 101, No 6, June 1998 Also available on the World-Wide Web at www cdc gov/nceh/programs/lead/guide/1997/guide97 htm

Australian Institute of Health & Welfare, 1998 *Lead in Australian Children Summary of the National Survey of Lead in Children*, Environmental Protection Agency of Australia http //www environment gov au/portfolio/epg/pubs/lead survey html

Bonner & Moore Associates, Inc , 1971 *Economics of Manufacturing Unleaded Motor Gasoline – 1969*, American Petroleum Institute (API) Publication No 4081, Houston, Texas

Braddock, J N 1988 *Factors Influencing the Composition and Quantity of Passenger Car Refueling Emissions — Part II*, SAE Paper No 880712, SAE International, Warrendale, Pennsylvania

Browner, Carol, 1996 Press statement by the EPA Administrator, March 3

California EPA, 1998 "MTBE," briefing paper prepared by the California Environmental Protection Agency, updated March 30 http //www arb ca gov/cbg/pub/pub htm

Carey, L R , W H Stover, and D W Murray, 1978 *Extended Drain Passenger Car Engine Oils*, SAE Paper No 780952, Warrendale, PA

Chan, L M and C S Weaver, 1998 *Implementing Vehicle Emission Standards in Egypt*, report to the U S Agency for International Development under the Cairo Air Improvement Program, by Engine, Fuel, and Emissions Engineering, Inc , Sacramento, CA

Previous Page Blank

BIBLIOGRAPHY

Conte Grand, M , 1998 *Social Benefits of Reducing Air Pollution in the Buenos Aires Metropolitan Area*, report prepared for Engine, Fuel, and Emissions Engineering, Inc , Sacramento, CA

Cook, B and J C Johnson, 1997 *Proposed Identification of Inorganic Lead as a Toxic Air Contaminant Part A Exposure Assessment*, Air Resources Board, Stationary Source Division, March

Coordinating Research Council, 1970 *The Effects of Leaded and Unleaded Gasolines on Exhaust Emissions Caused by Combustion Chamber Deposits*, B201946, NTIS, Washington, DC

Dirección General de Salud Ambiental-Secretaria de Salud, 1996 "Niveles de plomo en sangre de cordón umbilical en embarazadas y sus productos, residentes en la Ciudad de México "

Duffy, B L , P F Nelson, Y Ye, I A Weeks, and I E Garbally, 1998 "Emissions of Benzene, Toluene, Xylenes, and 1,3 Butadiene from a Representative Portion of the Australian Car Fleet," *Atmospheric Environment*, V 32, No 14/15, pp 2693-2704

Energy Sector Management Assistance Programme (ESMAP), 1997 *Armonización de las Especificaciones de los Combustibles en América Latina y el Caribe*, report No 203/98SP, Energy, Mining, and Telecommunications Department, The World Bank

Energy Sector Management Assistance Programme (ESMAP), 1997 Elimination of Lead in Gasoline in Latin America and the Caribbean, report No 194/97EN, Oil and Gas Division, Industry and Energy Department, The World Bank

Environmental Protection Agency of Australia, 1998 "Switching to Unleaded Petrol Fact Sheet " http //www environment gov au/portfolio/epg/fact_sheets/leadswitch html

Eskeland, G S and S Devarajan, 1996 *Taxing Bads by Taxing Goods* Directions in Development Series, The World Bank, Washington, DC

Faiz, A , C S Weaver, and M P Walsh, 1996 *Air Pollution from Motor Vehicles Standards and Technologies for Controlling Emissions*, The World Bank, November 1996

Furey, R L and D R Monroe 1981 *Fuel Sulfur Effects on the Performance of Automotive Three-Way Catalysts During Vehicle Emissions Tests*, SAE Paper No 811228, SAE International, Warrendale, Pennsylvania

Gergel, W C and T J Sheahan, 1976 *Maximizing Petroleum Utilization Through Extension of Passenger Car Oil Drain Periods — Whats Required?*, SAE Paper No 760050, Warrendale, PA

Grupo Interinstitucional de Estudios en Plomo (GIEP), 1993 "Impacto Ambiental de la Reformulacion de las Gasolinas en la Zona Metropolitana de la Ciudad de Mexico," Noviembre

Hernandez Avila M et al , 1996 "Dietary and Environmental Determinants of Blood and Bone Pb Levels in Lactacting Postpartum Women Living in Mexico City," *Environmental Health Perspectives*, Vol 104, No 10

Hickling Partners Inc , 1981 *Final Report on the Assessment of the Economic Impact on the Automotive Parts/Service Industry of the Proposed Gasoline Lead Content Regulations*, prepared for Environment Canada, March 31

Hirschfeld, D and J Kolb, 1995 *Phasing Out Lead from Gasoline Feasibility and Cost – A Study of the Refining Sector in Romania*, prepared for The World Bank and U S EPA, Abt Associates, Inc , Bethesda, MD

Hochhauser, A M , J D Benson, V Burns, R A Grose, W S Koehl, L J Painter, B H Rippon, R M Reuter, and J A Rutherford, 1991 *The Effect of Aromatics MTBE Olefins, and T90 on Mass Exhaust Emissions from Current and Other Vehicles*, The Auto/Oil Air Quality Improvement Research Program, Atlanta, Ga

Howson C , M Hernandez-Avila, and D Rall, 1996 "El Plomo en America, Estrategias para la Prevencion " Instituto Nacional de Salud Publica-Instituto de Medicina de los EUA

Instituto Mexicano del Petroleo (IMP), 1994 *Study of the Environmental Impact with the Mexico City Metropolitan Area of the PEMEX Ecological Package Gasoline Projects*, Mexico City, August

Leffler, W L , 1984 *Petroleum Refining for the Non-Technical Person*, 2nd ed , PennWell Books, USA

Loeb, A P, 1998 "Deciding Fuel Quality in India Lessons from Two Case Studies on Lead Reduction," paper presented at the Seminar on Alternate Energy Driven Vehicles, Auto Expo '98, Pragati Maidan, New Delhi

Lovei, M , 1997 *Phasing out Lead from Gasoline in Central and Eastern Europe Health Issues, Feasibility and Policies*, The World Bank, Washington, DC

Lovei, M , 1998 *Phasing Out Lead from Gasoline Worldwide Experiences and Policy Implications*, World Bank Technical Paper No 397, Pollution Management Series, Washington, DC

Maddison, D , K Lvovsky, G Hughes, and D Pearce, 1997 "Air Pollution and the Social Costs of Fuels A Methodology with Application to Eight Cities," photocopy, World Bank, July 23

McArragher, J S et al , 1988 *Evaporative Emissions from Modern European Vehicles and their Control*, SAE Paper No 880315, SAE International, Warrendale, Pennsylvania

McArragher J S L J Clarke, and H Paesler 1993 Prevention of Valve-Seat Recession in European Markets," presented at the Coordinating European Council Fourth Intl Symposium on the Performance Evaluation of Automotive Fuels and Lubricants, Birmingham, UK, 5-7 May

Meyers, R A (ed), 1996 *Handbook of Petroleum Refining Processes*, 2nd ed , McGraw-Hill, USA

Nichols, A L , undated "Lead in Gasoline," photocopies provided by National Economic Research Associates, San Francisco, CA

Ostro B , 1994 "Estimating the Health Effects of Air Pollutants A Method with an Application to Jakarta,' Policy Research Working Paper No 1301, World Bank Policy Research Department, Public Economics Division, Washington, DC

Ostro B D , J K Mann, J F Collins, R Das, W A Vance, and G V Alexeeff, 1997 *Proposed Identification of Inorganic Lead as a Toxic Air Contaminant Part B Health Assessment*, Air Resources Board, Stationary Source Division, March

Owen, K and T Coley, 1995 *Automotive Fuels Handbook*, 2nd ed , SAE International, Warrendale, PA

Pardon M and A P Martinez, 1998 "Health Impact of Air Pollution in Mexico, A Review of Selected Investigations,' Panamerican Health Organization August (unpublished)

Parsons, P J , A A Reilly, and D Esernio-Jenssen, 1997 "Screening Children Exposed to Lead An Assessment of the Capillary Blood Lead Fingerstick Test," *Clinical Chemistry*, 43 2, 302-311 (1997)

Pirkle J L et al 1994 "The Decline in Blood Lead Levels in the United States," The National Health and Nutrition Examination Surveys, *JAMA* 1994, Jul 27, 272(4) 284-91

Regional Environmental Center for Central and Eastern Europe (REC), 1998 *Sofia Initiative Working Group on Collaborating Programme on Improving Local Air Quality in Central and Eastern Europe*, Szentendre, Hungary, February 12-13, 1997

Romieu I et al , 1993 "Determinant of Blood Pb Levels Among Women in Reproductive Age and their Children Less than Five Years, Living in Mexico City" *Proceedings of Indoor Air*, Vol 3

Romieu I , E Palazuelos M Hernandez, G Olais, and R Tapia, 1995 *Issues of Lead Contamination The Experience of Mexico*, U S and Mexico Sponsored International Workshop on Phasing Lead Out of Gasoline, The Smithsonian Institution, Washington, DC, March 14-15

Rudin, M 1998 'Many Russian Refineries Plagued by Financing Problems," *Oil and Gas Journal*, 96 36, September 7

Sanchez, S 1998 untitled report to Engine, Fuel, and Emissions Engineering, Inc , Sacramento, CA

Saunders, B 1997 "Major Overcapacity Woes Loom for Oxygenates Despite Rising Demand," *Oil and Gas Journal*, 95 13, March 31

Schwartz, 1994a "Low-Level Lead Exposure and Children's IQ A Meta-Analysis and Search for a Threshold," *Environmental Research*, v 65, pp 42-55

Schwartz, 1994b "Societal Benefits of Reducing Lead Exposure," *Environmental Research*, v 66, pp 105-124

Schwartz J , H Pitcher, R Levin, B Ostro, and A L Nichols, 1985 *Costs and Benefits of Reducing Lead in Gasoline Final Regulatory Impact Analysis*, Economic Analysis Division, Office of Policy, Planning and Evaluation, U S EPA, Washington, DC

Sessions, S , M Gaffen, S Moore, R. Efroymson, F El-Gohary, M Nasralla, A El Gamal, and A Abdel Gawad, 1994 *Comparing Environmental Health Risks in Cairo, Egypt*, 3 volumes, Chemonics International, Inc , Washington, DC

Shetty, S et al , 1994 *Thailand Mitigating Pollution and Congestion Impacts in a High-growth Economy Country Economic Report*, Report No 11770-TH, Country Operations Division, Country Department I, East Asia and Pacific Region, The World Bank, Washington, DC

Shuverov, V M and V A Krylov, 1997 "Catalyst Improves Octane at Perm Refinery," *Oil and Gas Journal*, 95 97 November 24

U S Centers for Disease Control, 1998 *Blood Lead Level Laboratory Reference System*, www cdc gov/nceh/pubcatns/1994/cdc/fsheets/bllrs htm or National Center for Environmental Health, U S CDC, Atlanta, GA

U S Environmental Protection Agency, 1985 Dupont waiver decision, 50 FR 2615, January 17 (see also 51 FR 39800, October 31, 1986)

U S Environmental Protection Agency, 1986 *Air Quality Criteria for Lead*, Vols I-IV, EPA 600/8-83-028dF, Environmental Criteria and Assessment Office, Cincinnati, OH, June

U S Environmental Protection Agency, 1987 *Draft Regulatory Impact Analysis Control of Gasoline Volatility and Evaporative Hydrocarbon Emissions from New Motor Vehicles*, Office of Mobile Sources, Washington, DC

U S Environmental Protection Agency, 1988 *Report to the President and Congress on the Need for Leaded Gasoline on the Farm*, Office of Air and Radiation, Washington, DC, October

U S Environmental Protection Agency, 1990 *Air Quality Criteria for Lead Supplement to the 1986 Addendum*, EPA 600/8-89/049F, Environmental Criteria and Assessment Office, Research Triangle Park, NC

U S Environmental Protection Agency, 1993 *Motor Vehicle-Related Air Toxics Study* EPA 420-R-93-005 Office of Mobile Sources, Ann Arbor, MI, April

U S Environmental Protection Agency, 1994 Decision rejecting Ethyl waiver petition, 59 FR 42260, August 17

U S Environmental Protection Agency, 1997 Method TO-14A, *Compendium of Methods for the Determination of Toxic Organic Compounds in Ambient Air Second Edition*, EPA/625/R-96-010b, Center for Environmental Research Information, Cincinnati, OH Also available on the World-Wide Web at www epa gov/ ttnamti1/files/ambient/airtox

Walsh, M P and E K Silbergeld, 1996 *Elimination of Lead in Gasoline in Latin America and the Caribbean The Health Consequences of Leaded and Lead Free Gasoline*, The World Bank and The Pan American Health Organization, August 30

Wangwongwatana S , 1998 *Unleaded Air in Bangkok A Story of Success* Pollution Control Department, Ministry of Science Technology and Environment, Bangkok, Thailand

Weaver, C S 1986 *The Effects of Low-Lead and Unleaded Fuels on Gasoline Engines*, SAE Paper No 860090, SAE International, Warrendale, PA

Wintringham, J S , A E Felt, W J Brown, and W E Adams 1972 *Car Maintenance Expense in Owner Service with Leaded and Nonleaded Gasolines*, SAE Paper No 720499, Warrendale, PA

World Bank 1997 *Assessment for the Program for the Improvement of Air Quality in the Valley of Mexico*, Washington, DC, October

World Health Organization (WHO), 1992 *Urban Air Pollution in Megacities of the World*, Blackwell, Oxford, UK

World Health Organization (WHO), 1995 *Environmental Health Criteria 165 Inorganic Lead*, International Program on Chemical Safety, Geneva