PN-ACE-737
101036

The Hashemite Kingdom of Jordan

Ministry of Water and Irrigation

Water Quality Improvement and Conservation Project

REPORT- 3114-95-2b-41

Feasibility Study:

Jordan Yeast Industries Co., Ltd.

Harza Environmental Services, Inc

Development Alternatives Inc

The Technical Assistance Team Includes

Development Alternatives, Inc
Science Applications International Corp
Harza Environmental Services, Inc
Development Associates, Inc

USAID

United States Agency for International Development
Contract No 278-0288-00-C-4026-00

October 1995

BEST AVAILABLE COPY

FEASIBILITY STUDY FOR
YEAST INDUSTRIES COMPANY, LTD

JORDAN

Submitted to
United States Agency
For International Development

Submitted by
Development Alternatives, Inc

Prepared for
Amman Chamber of Industry, Jordan
Ministry of Water and Irrigation, Jordan

Prepared by
Harza Consulting Engineers and Scientists
Chicago, Illinois, USA
in association with
Royal Scientific Society
Amman, Jordan

PREFACE/ACKNOWLEDGMENTS

This report is the result of a feasibility study performed for the Jordan Yeast Industries Company Ltd , in Jordan The purpose of the study was to evaluate technical and economical feasibilities of the pollution prevention/waste minimization (PP/WM) and water conservation techniques recommended in Audit Report #3114-94-2b-39 dated April 1995

Several individuals on the Water Quality Improvement and Conservation Project contributed to this report Dr Usama Mudallal of the Amman Chamber of Industry (Chamber) Engineer Rania Abdel Khaleq of the Ministry of Water and Irrigation (MWI) and Dr Omar Jabay and Eng Hashim Beano of the Royal Scientific Society of Amman plant managerial and technical staff including Mr Reymon Halteh General Manager and Eng Samir Juaaneh technical manager shared their knowledge with Mr Krishna Mayenkar of Harza Consulting Engineers and Scientists (Harza) Chicago Illinois USA These technical staff worked under the direction of Dr Shawn R Niaki P E Pollution Prevention Program Director of Harza who heads the WQIC component under which the study was housed It is from their combined expertise that this report was possible

Special appreciation is given to Dr Mohammed Bani Hani, Secretary General of MWI Eng Koussai Quteishat Secretary General of the Water Authority of Jordan (WAJ) Mr Khaldun Abuhassan Chairman of the Chamber Mr Walid Al-Khathib Director General of the Chamber Dr Muwaffaq Saqqar Project Coordinator from MWI the members of the PP/WM working group from WAJ including Eng Abdul Wahab Matar Eng Marwan Al-Tal Eng Mohamad Lafi and to Development Alternatives Inc as represented by Edwin D Stains Chief of Party for their cooperation and confidence

EXECUTIVE SUMMARY

Development Alternatives, Inc (DAI) under Contract No 278-0288-00-C-4026-00 with the United States Agency for International Development (USAID) is performing an Industrial Wastewater Discharge Prevention Program (IWDPP) in Amman, Jordan This Program is one of four components of the Water Quality Improvement and Conservation Project (WQICP) funded by USAID This program is being performed by DAI with full coordination between the Ministry of Water and Irrigation (MWI) and the Amman Chamber of Industry (Chamber) Harza Consulting Engineers and Scientists (Harza), Chicago, United States (U S), was retained by DAI to lead the IWDPP The Royal Scientific Society (RSS) of Amman, Jordan was selected as a local consultant to assist Harza with the IWDPP This Program includes conducting the PP/WM audits, feasibility studies, and designing demonstration facilities at selected industrial facilities

This report presents the findings of the Feasibility Study (FS) for Yeast Industries Company (YIC) The objective of the FS was to evaluate the technical, financial, and logistical feasibility of the most promising PP/WM and water conservation techniques identified for YIC the in the previously performed PP/WM audit

PROCESS AND FACILITY DESCRIPTION

The YIC is located on the north bank of the Zarqa River in an agricultural area near the western perimeter of the Ruseifa, Jordan The facility produces fresh compressed and dry active baker s yeast The facility started production in 1978 In 1992, the facility produced 2,582 tons of compressed yeast and 865 tons of dry yeast (95 to 98 percent solids) which is equivalent to about 2 600 tons of wet filtered yeast with 30 to 32 percent solids On a wet basis (about 30 percent solids) YIC produces about 5,200 tons of yeast per year, which is about 87 percent of the facility s total production capacity (6,000 tons per year) The facility operates 24 hours per day and seven days a week The facility employs about 70 people

The facility occupies 10,000 square meters of land and consists of a main production building which houses the fermentors dryers, packaging equipment and plant offices Also, there is a small utility building which houses two boilers for process steam production and five air compressors which supply air to the fermentors Outside of the facility buildings, there are molasses storage tanks, water cooling towers, and an abandoned wastewater treatment plant

AUDIT CONCLUSIONS

Several potential PP/WM and water conservation opportunities were identified during the audit at the YIC facility By implementing the identified measures the pollution load was expected to be reduced by about 15 to 20 percent and the total water consumption reduced from 636 m /day to 438 m^3/day resulting in a 30 percent reduction

Although the identified PP/WM opportunities could potentially reduce the organic pollution and

wastewater volume by 15 to 20 percent, a cost effective treatment for processing the final wastewater was also strongly recommended Therefore, the recommendation selected for the detailed FS was to upgrade the wastewater treatment system The reason for selecting this item was to insure adequate protection of surface and groundwater resources from potential contamination by YIC s high strength wastewater, which currently is discharged to land irrigation without pretreatment The objective of the feasibility study was consistent with the primary concern of the WQICP which is the protection of the quality of Jordan s water resources

The proposed wastewater treatment consists of a land treatment system preceded by an anaerobic wastewater pretreatment system

TECHNICAL FEASIBILITY EVALUATION

Ttechnical, economic, and environmental feasibility analyses were conducted for each of the following options

1. Land treatment of YIC wastewater without pretreatment,
2. Land treatment of YIC wastewater following anaerobic pretreatment of concentrated wastes and
3. Land treatment of YIC wastewater following anaerobic pretreatment of total wastewater flow

The type of land treatment system selected for consideration at YIC was the Slow Rate (SR) land treatment process SR land treatment is characterized by the application of wastewater to a vegetated surface to be treated as the wastewater flows through the plant-soil matrix A portion of the flow is used by the vegetation, while some percolates to the confining layer or groundwater table This type of system has the highest treatment potential of the three soil-based systems listed above due to relatively low application rates combined with the very active ecosystem near the soil surface and has low operation and maintenance requirements

The land treatment area currently supports various trees shrubs and grasses The types of trees present are Kinya Accacia and pine

A properly designed SR land treatment system can effectively remove Biochemical Oxygen Demand (BOD) and nitrogen from wastewater through natural filtration, adsorption, nitrogen uptake by vegetation and nitrification-denitrification processes However, the heavy loadings of BOD and nitrogen at YIC combined with the high salinity of the local well water and the arid climate presented a significant challenge for developing a successful land treatment system The plan for improving the land treatment system was developed based on design parameters including

- BOD loading
- Nitrogen loading,

- Phosphorus loading,
- Soil permeability,
- Salt loading, and
- Irrigation requirements

The following is a dicussion of the options analyzed

Land Treatment Without Anaerobic Pretreatment Given the characteristics of the YIC wastewater and the typical performance of a land treatment system, it not considered possible for land treatment alone to achieve appropriate levels of treatment, in particular for BOD and nitrogen The lack of appropriate treatment creates the potential for odors, health risks, and groundwater contamination For these reasons the option of using land treatment with no pretreatment was not further considered in the feasibility analysis However, it was recommended that a pilot study for untreated waste be performed on the land treatment system to evaluate the performance of land treatment under high loadings, and thereby help determine the actual level of pretreatment required

Land Treatment Following Pretreatment of Concentrated Wastes The expected performance of an Upflow Anaerobic Sludge Blanket (UASB) system for treating only the concentrated wastes (flow from separators #1 and #2) is similar to the system for treating the entire waste stream presented in the following section BOD and COD removal efficiencies for UASB were expected to be around 70 percent and 90 percent, respectively However a comparison of the system requirements associated with the different flows and concentrations revealed the following

- **Digester volume** Although the flow into the UASB digester would be less if only the concentrated wastes were treated, the digester volume would be 1 75 times as large

- **Hydraulic detention time** Due to internalized recycling necessary to bring the heavily loaded wastes from separators #1 and #2 to lower concentration levels for efficient treatment the hydraulic detention time of the concentrated waste system was substantially greater than that for the total wastewater flow

- **Space** The space needed for the system to treat the concentrated waste streams was approximately 30 percent greater than the space required for the treatment of the total wastewater flow

- **Cost** The cost of the larger system for treating the concentrated streams was estimated to be 20 percent higher

The conclusions of the above were that no pretreatment was not a viable alternative and it appeared more efficient and cost effective to treat the total flow of wastewater at YIC than to try to treat the discharges from separators #1 and #2 separately Costs were fully developed

however, for both of the pretreatment options

SYSTEM COMPONENTS

The proposed pretreatment system was developed to maximize the use of existing facilities in order to reduce the costs and satisfy space requirements The components of the proposed system are listed below

- Land Application Upgrade
- Wastewater Storage Pond
- Anaerobic pretreatment, and
- Other pretreatment

A layout of the proposed land treatment system is provided in ***Figure ES-1*** A conceptual layout of the proposed pretreatment of total wastewater is provided in ***Figure ES-2***, and a layout of the proposed pretreatment system for total wastewater is provided in ***Figure ES-3***

COSTS/BENEFIT EVALUATION

Costs The costs for the proposed system were as follows

- The cost estimate for the land treatment distribution system was JD 42 800

- The cost for the wastewater storage pond, with aeration for odor control, was JD 184,200 This pond provides storage for YIC wastewater during the rainy season and for site runoff

- The cost for the anaerobic component of the treatment upgrade was approximately JD 648 600 for pretreatment of concentrated waste streams and JD 531 600 for pretreatment of total wastewater flow By reusing the existing tanks as much as possible in the proposed system, some cost amounts were reduced

- The additional pretreatment equipment proposed in the system is estimated to cost JD 289 700 including a pumping station for filtering, two multimedia filters and two air stripping towers complete with pH adjustment equipment

The total cost of the proposed system including 20 percent for shipping of imported equipment and a 20 percent contingency was estimated at JD 1,517,600 for treatment of concentrated waste streams and JD 1 363 200 for treatment of total waste streams

1

Annual operation and maintenance costs for both alternatives were developed Total costs were JD 56,400 with pretreatment of concentrated wastes and JD 53 500 with pretreatment of total wastewater flow

The ***Table ES-1*** summarizes costs provides equivalent costs for a 20 year project life and 6 0 percent interest rate The equivalent costs are provided per year, per day, per cubic meter of treated wastewater, per ton of yeast, and per 100 g of yeast The equivalent cost per ton of yeast was JD 36 for pretreatment of concentrated wastewater, and JD 33 for pretreatment of total wastewater flow Therefore, the impact of wastewater treatment on the wholesale price of a 100 g package of yeast would be JD 0 0036 for the concentrated wastewater option and JD 0 0033 for the total wastewater option

Benefits Although it was claimed that the existing land treatment system operates successfully our analysis showed that without pretreatment the nitrogen loading becomes a critical factor Given the high nitrogen concentration in the untreated wastewater, the allowable application rate was much less than evapotranspiration and therefore could not support plant life If the application rate was increased to match evapotranspiration, then the nitrogen concentration exceeded the soil and vegetation removal capacity

The odor due to biodegradation of concentrated organics could become another problem when high organic loading rates are used for land treatment Such odor could be a nuisance and pose health hazards due to the presence of sulfur and methane related compounds in odorous emissions

Lastly, the success for direct application of wastewater without pretreatment is not, was our opinion fully established with rigorous soil, treated effluent, and groundwater monitoring Observed growth of certain vegetation appeared to be the only parameter to prove that environmentally the existing system works

The application of untreated wastewater, in our opinion needed to be proven successful and reliable with rigorous monitoring data, mass balances, and monitoring of vegetation soils and groundwater during at least 3 to 5 hydrological cycles (3 to 5 years) to be accepted This would also help gain acceptance by public and regulatory agencies

We therefore recommended that a demonstration facility be implemented To provide a comparison one portion should use untreated wastewater while another use pretreated wastewater

The cost of pretreatment of wastewater was relatively high, but the long term impact of the pretreatment/land treatment option could be that the yeast industry could continue to operate the existing facility and even expand the same with this sound environmental program rather than risking reduced plant operation due to land treatment constraints

The YIC wastewater treatment project, if successfully implemented could provide a

model of effective waste management and could be followed by other industries which also currently discharge wastewater to land irrigation The cost of implementing this project must be shared by the government, other financial sources, and industry as a role model for other industries

ENVIRONMENTAL EVALUATION

The implementation of an upgraded land treatment system would provide an effective way to treat the wastewater at YIC Nutrient and BOD loadings in the present wastewater stream however posed definite concerns for the extended use of the land

The nitrogen concentration in the applied wastewater must be brought down from 870 mg/l to 50 mg/l to comply with the Jordan standard 202 The effectiveness of land treatment of nitrogen would be greatly enhanced with this decrease in loading and was expected to produce a final effluent of less than 10 mg/l in the percolate

The current BOD concentrations in the wastewater must also be reduced prior to land treatment Anaerobic treatment was a proven effective way of treating BOD in yeast facility effluents to a level that can be successfully treated by the soil

The expected result of treating the total wastewater flow with anaerobic treatment and ammonia removal was an effluent that could be applied to the land treatment system Approximately 90 percent BOD reduction was anticipated from the anaerobic treatment process which would produce a concentration of approximately 600 mg/l This level was well within the optimal range for successful land treatment The ammonia removed from the air strippers was also expected to produce the required quality of less than 50 mg/l for irrigation

CONCLUSIONS

The most effective solution for managing the strong wastewater at YIC is to add anaerobic treatment filtration and air stripping for the total wastewater flow utilize the existing tanks and clarifier and upgrade the land treatment application Using this system, the BOD and nitrogen concentrations would also be reduced enough to protect surface and groundwater resources

RECOMMENDATIONS

There are issues associated with how the wastewater effluent relates to the effectiveness of land treatment that must be addressed in the demonstration phase For a demonstration project two small plots of land should be developed to receive two representative effluent qualities One plot will be irrigated with the current total effluent from the facility, while the other plot will receive only the dilute wastes from the plant and the effluent from separator #3 This second situation will simulate the use of pretreated wastewater for land treatment

The focus of the demonstration project would be to verify the predicted effectiveness of land

9

treatment at YIC The demonstration systems will be constructed so that the percolated water can be collected and monitored for nitrogen, BOD, and salinity A comparison will be performed between the percolate of the two systems to verify the effectiveness of BOD and nitrogen removal, and to verify the need and required level of for pretreatment The salinity of the soil and percolated water will also be monitored

10

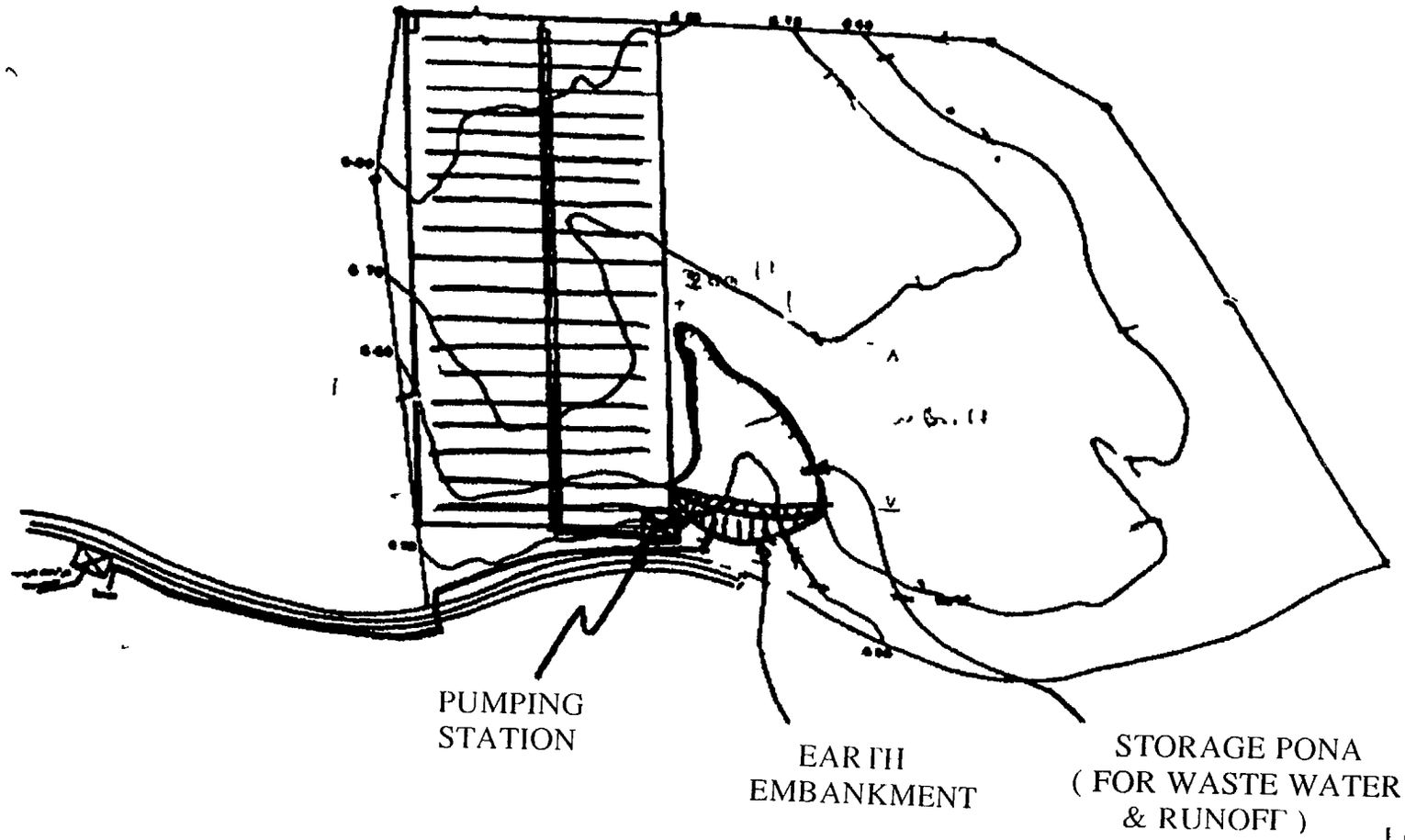

Figure L S 1

PROPOSED LAND APPLICATION SYSTEM LAYOUT

FEASIBILITY STUDY FOR YEAST INDUSTRIES CO LTD

Ruseifa, Jordan

HARZA Consulting Engineers and Scientists

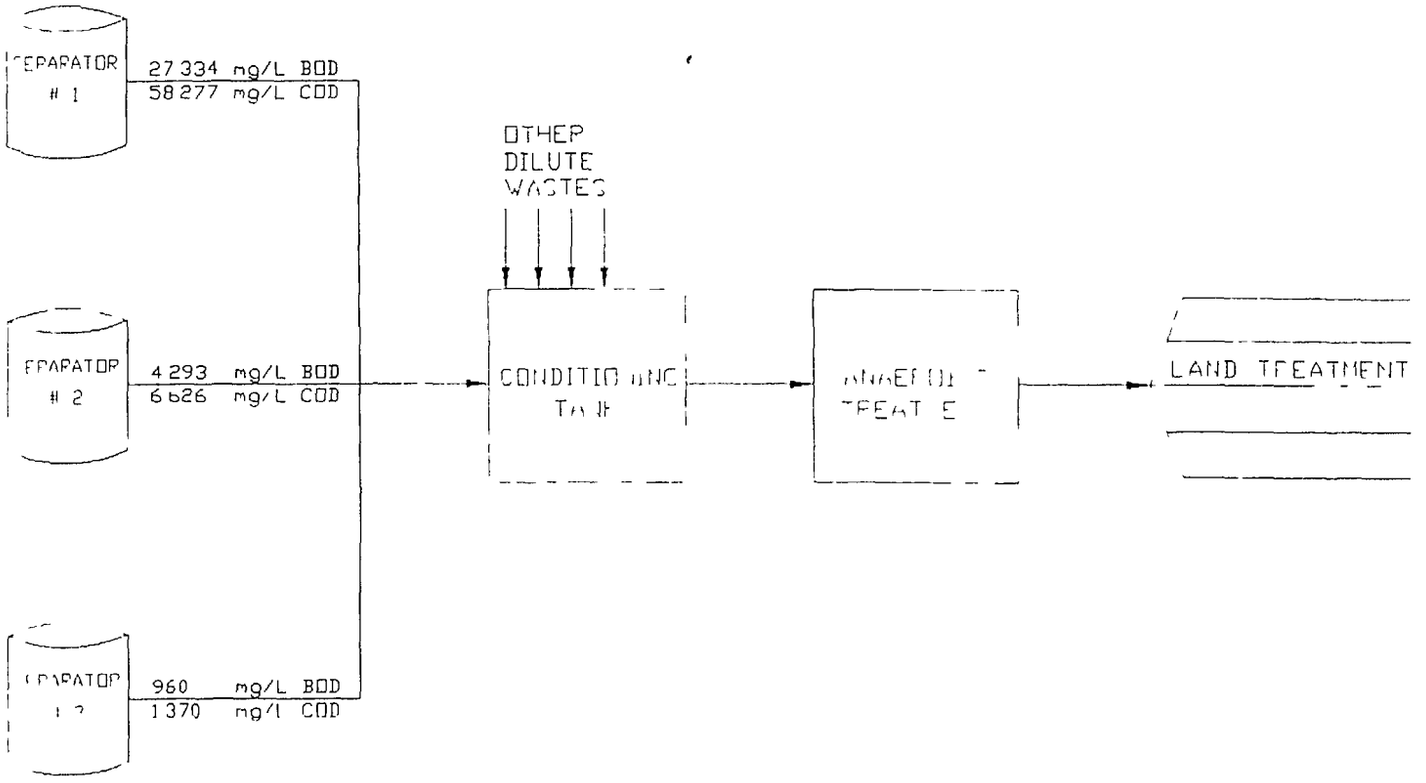

Figure F S 2
CONCEPTUAL LAYOUT FOR PRETREATMENT
FOR TOTAL WASTEWATER FLOW
FEASIBILITY STUDY FOR YEAST INDUSTRIES CO LTD
Russeifa Jordan

HARZA Consulting Engineers and Scientists

BEST AVAILABLE COPY

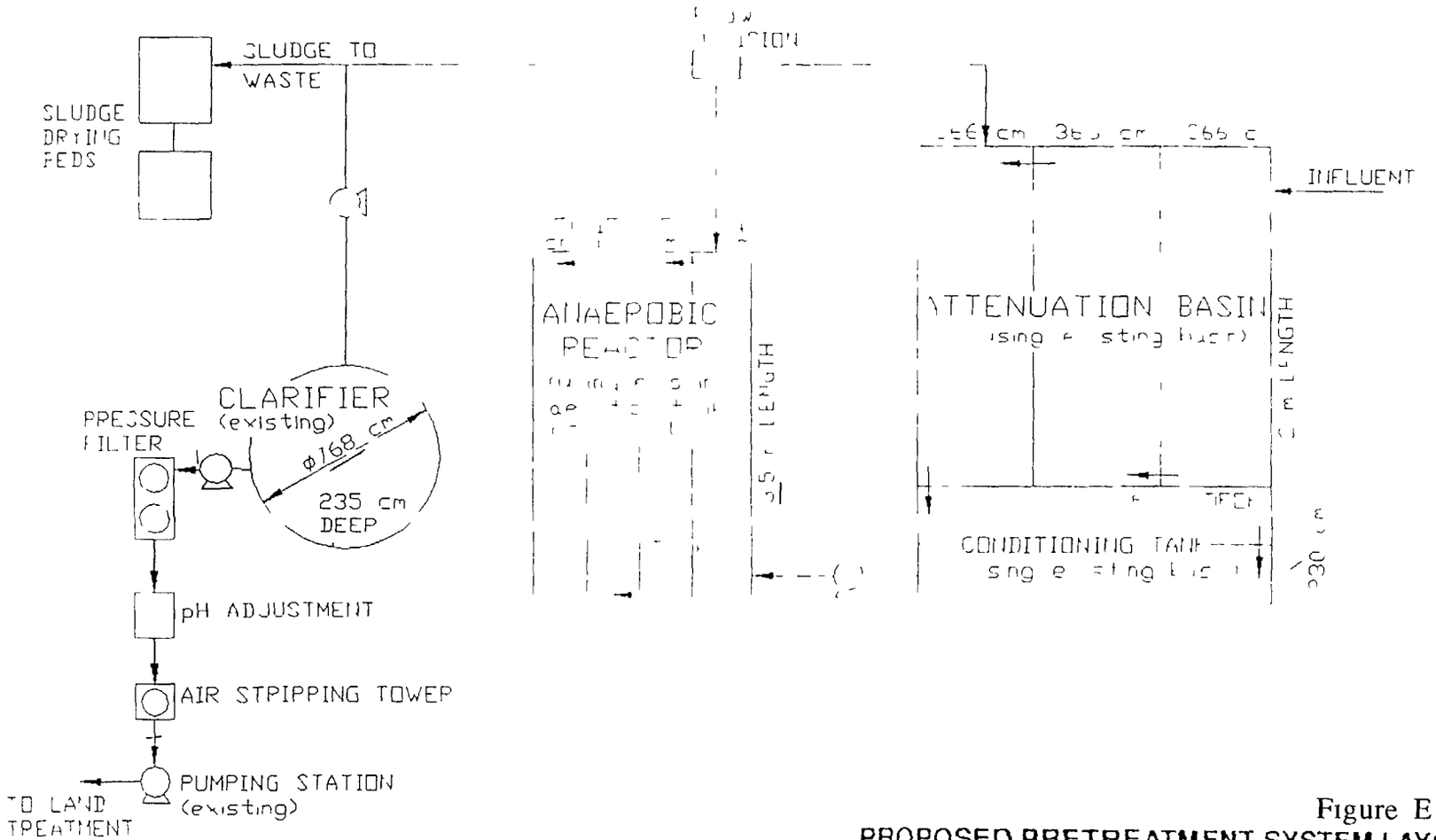

Figure E S 3
PROPOSED PRETREATMENT SYSTEM LAYOUT
FEASIBILITY STUDY FOR YEAST INDUSTRIES CO LTD
Russeifa, Jordan

HARZA Consulting Engineers and Scientists

BEST AVAILABLE COPY

Table ES-1
TOTAL COST ANALYSIS
Yeast Industries Company

Pretreatment of Concentrated Wastestreams		Pretreatment of Total Wastewater Flow	
Item	**Cost (JD)**	**Item**	**Cost (JD)**
Initial Capital Cost	1,517 600	**Initial Capital Cost**	1 363 200
Annual Operation and Maintenance Costs	56 400	**Annual Operation and Maintenance Costs**	53 500
Total Equivalent Costs		**Total Equivalent Costs***	
Equivalent Yearly Cost	188,988	Equivalent Yearly Cost	172 300
Equivalent Daily Cost	517	Equivalent Daily Cost	472
Equivalent Cost Per Cubic Meter of WW	0 040	Equivalent Cost Per Cubic Meter of WW	0 036
Equivalent Cost per ton of yeast**	30	Equivalent Cost per ton of yeast**	33
Equivalent Cost per 100 g of yeast**	0 0036	Equivalent Cost per 100 g of yeast**	0.0033

* Based on a 20-year project life and 6 0% interest rate

** Based on a yeast production of 6200 tons/year

Table ES-1
TOTAL COST ANALYSIS
Yeast Industries Company

Pretreatment of Concentrated Wastestreams		Pretreatment of Total Wastewater Flow	
Item	**Cost (JD)**	**Item**	**Cost (JD)**
Initial Capital Cost	1 517 600	**Initial Capital Cost**	1 363 200
Annual Operation and Maintenance Costs	56 400	**Annual Operation and Maintenance Costs**	53 500
Total Equivalent Costs*		**Total Equivalent Costs***	
Equivalent Yearly Cost	259 600	Equivalent Yearly Cost	236 000
Equivalent Daily Cost	711	Equivalent Daily Cost	647
Equivalent Cost Per Cubic Meter of WW	0 054	Equivalent Cost Per Cubic Meter of WW	0 049
Equivalent Cost per ton of yeast**	50	Equivalent Cost per ton of yeast**	45
Equivalent Cost per 100 g of yeast**	0 0050	Equivalent Cost per 100 g of yeast**	0 0045

Based on a 20-year project life and 12 0% interest rate

** Based on a yeast production of 5200 tons/year

HARZA TBY-REV2 XLW
10/26/9J 5 06 PM

TABLE OF CONTENTS

1 0	INTRODUCTION	1
	1 1 Background	1
	1 2 Objectives	1
	1 3 Report Organization	1
2 0	SUMMARY OF AUDIT FINDINGS	2
	2 1 Process and Facility Description	2
	2 2 Audit Findings	2
	2 2 1 Water Usage	2
	2 2 2 Wastewater Sources	2
2 3	Audit Conclusions	3
3 0	FEASIBILITY STUDY PROCESS	5
4 0	TECHNICAL FEASIBILITY EVALUATION	6
	4 1 Land Treatment	6
	4 1 1 Existing Land Treatment System	6
	4 1 2 Design Parameters	7
	4 1 3 System Components	11
	4 2 Anaerobic Treatment	13
	4 3 Feasibility Analysis	14
	4 3 1 Existing Wastewater Treatment System	14
	4 3 2 Treatment Options	14
	4 3 3 System Components	16
5 0	OPPORTUNITY COST/BENEFIT EVALUATION	19
	5 1 Economic Cost/Benefit Analysis	19
	5 1 1 Cost	19
	5 1 2 Benefits	20
	5 2 Environmental Evaluation	21
6 0	CONCLUSIONS AND RECOMMENDATIONS	22
	6 1 Conclusions	22
	6 2 Demonstration Project Recommendations	22

APPENDICES

Appendix A	Screening of Alternatives
Appendix B	Soil and Geology Data
Appendix C	Hydrological Data
Appendix D	Crop Selection Data
Appendix E	Physical Specifications of Equipment

TABLES

Table 1	Overall Water Balance Across Facility
Table 2	Summary of Wastewater Sources
Table 3	Proposed Water Reduction, Recycle and Reuse
Table 4	Design Loading Rate Calculations for Untreated Effluent
Table 5	Design Loading Rate Calculations for Pretreated Effluent
Table 6	Wastewater Quality Data
Table 7	Nitrogen Uptake and Salt Tolerance for Selected Crops
Table 8	Comparison of Pretreatment Options
Table 9	Comparison of Capital Costs
Table 10	Comparison of Annual Operating and Maintenence Costs
Table 11	Total Cost Analysis

FIGURES

Figure 1	Overall Water Balance
Figure 2	Conceptual Water Balance
Figure 3	Existing Land Treatment System Layout
Figure 4	Proposed Land Treatment System Layout
Figure 5	Land Application Distribution Configuration
Figure 6	Existing Wastewater Treatment Facility
Figure 7	Conceptual Layout for Pretreatment for Concentrated Wastes Only
Figure 8	Conceptual Layout for Pretreatment for Total Wastewater Flow
Figure 9	Proposed Pretreatment System Layout

1 0 INTRODUCTION

This report presents feasibility studies (FS) for pollution prevention and waste minimization (PP/WM) and water conservation for the Yeast Industries Company, Ltd (YIC)

1 1 Background

Development Alternatives Inc (DAI) under Contract No 278-0288-00-C-4026-00 with the United States Agency for International Development (USAID) is performing an Industrial Wastewater Discharge Prevention Program (IWDPP) in Amman Jordan This Program is one of four components of the Water Quality Improvement and Conservation Project (WQICP) funded by USAID This program is being performed by DAI with full coordination between the Ministry of Water and Irrigation (MWI) and the Amman Chamber of Industry (Chamber) Harza Consulting Engineers and Scientists (Harza), Chicago, United States (U S), was retained by DAI to lead the IWDPP The Royal Scientific Society (RSS) of Amman Jordan was selected as a local consultant to assist Harza with the IWDPP This Program includes conducting the PP/WM audits feasibility studies, and designing demonstration facilities at selected industrial facilities

The PP/WM techniques are defined as any techniques to prevent or reduce waste generation by source reduction or recycling activities These activities must reduce either the volumes or the concentrations of pollutants generated prior to treatment, storage or disposal of the waste

Based on a ranking methodology, the PP/WM Committee selected ten industries with potential needs for PP/WM audits, as the first step of the IWDPP The purpose of the audits was to assist the industries in the Amman-Zarqa Basin in assessing pollution problems and developing alternative solutions to achieve desired levels of PP/WM water conservation, and wastewater treatment appropriate for the selected industry The next step in the IWDPP is to further develop the most promising options for PP/WM revealed through the audit process by performing a FS This report provides the FS for the yeast industry and also outlines potential demonstration projects that may be carried out within the next phase of the IWDPP

1 2 Objectives

The objective of the FS is to evaluate the technical financial, and logistical feasibility of the most promising PP/WM and water conservation techniques identified in the Audit Report

1 3 Report Organization

This report contains an introduction a summary of audit findings and recommendations (from the previous PP/WM Audit Report) a screening of recommendations, the feasibility analysis of the selected alternative, and conclusions and recommendations The recommendations provide suggestions for subsequent demonstration projects

2 0 SUMMARY OF AUDIT FINDINGS AND RECOMMENDATIONS

2 1 Process and Facility Description

The YIC is located on the north bank of the Zarqa River in an agricultural area near the western perimeter of the Ruseifa, Jordan The facility produces fresh compressed and dry active baker s yeast The facility started production in 1978 In 1992 the facility produced 2 582 tons of compressed yeast and 865 tons of dry yeast (95 to 98 percent solids) which is equivalent to about 2 600 tons of wet filtered yeast with 30 to 32 percent solids On a wet basis (about 30 percent solids), YIC produces about 5 200 tons of yeast per year which is about 87 percent of the facility s total production capacity (6,000 tons per year) The facility operates 24 hours per day and seven days a week The facility employs about 70 people

The facility occupies 10,000 square meters of land and consists of a main production building which houses the fermentors dryers, packaging equipment and plant offices Also, there is a small utility building which houses two boilers for process steam production and five air compressors which supply air to the fermentors Outside of the facility buildings there are molasses storage tanks, water cooling towers and an abandoned wastewater treatment plant

2 2 Audit Findings

2 2 1 Water Usage

Water for industrial use at the YIC facility is obtained from a private groundwater supply well The facility uses this water primarily for (percentage of total fresh water consumed)

- Process operations (66 percent)
- Equipment cleaning (18 percent)
- Cooling (9 percent)
- Sterilization (3 percent),
- Floor washing (3 percent) and
- Regeneration and other (1 percent)

Water used for domestic purposes is entirely supplied by WAJ An overall water balance across the facility is presented in **Table 1** and is illustrated on **Figure 1**

2 2 2 Wastewater Sources

The main wastewater sources at YIC are

- Centrifuge separator discharges (390 m /day)
- Tank washwater (54 m /day)
- Wastewater treatment plant washwater (50 m^3/day)

- Floor and lab wastewater (21 m^3/day),
- Filter washwater (10 m^3/day), and
- Filtrates (10 m^3/day)

The residual molasses liquor discharged from Separator #1 is the most concentrated wastewater generated at the facility Wastewater effluent from Separator #2 is moderately high with respect to organic loading Other combined discharges could be considered to be dilute wastewater The YIC does not have a program for monitoring water use, wastewater discharges and air emissions The wastewater sources are summarized in ***Table 2***

The total facility industrial wastewater discharge amounts to about 545 m^3/day All the industrial wastewater is discharged to an off-site land treatment area Some intake water is also lost due to evaporation, fugitive steam, and product moisture These water losses (91 m^3/day) correspond to approximately 16 percent of the total wastewater discharge

2 3 Audit Conclusions

Several PP/WM and water conservation opportunities exist at the YIC facility By implementing the following measures the pollution load is expected to be reduced by about 15 to 20 percent and the total water consumption can be reduced from 636 m^3/day to 438 m^3/day, resulting in a 30 percent reduction ***Figure 2*** presents the conceptual water balance and ***Table 3*** summarizes the proposed water reduction, recycle and reuse Identified PP/WM and water conservation opportunities are noted below

1 The organic load generated at the facility could be minimized through

- Process optimization and automation,
- Process automation with incremental feed additions rather than manual batch operation
- Fermentation process control through exhaust monitoring and feed back control
- Minimizing tank cleaning frequency
- Countercurrent washing of yeast including reuse of filtrate,
- Good housekeeping
- Sweeping or dry vacuuming floors, and
- Implementation of new technologies or installation of new resins for water demineralization

2 Water savings should result from the PP/WM measures described herein In addition water conservation can be achieved through implementation of

- Installation of an air cooling system
- Use of dilute wastewaters to clean wastewater conveyance piping instead of fresh water

- Tank cleaning frequency minimization and use of last rinse water for the first rinse of the next cleaning cycle, and
- Filtrate recycling

Other PP/WM and water conservation opportunities such as vented steam capture and recycle and separator effluent evaporation and recycle may exist which may require new process applications or modifications and which may be relatively more difficult to implement

Although the above PP/WM opportunities could potentially reduce the organic pollution and wastewater volume by 15 to 20 percent, a cost effective treatment for processing the final wastewater should also be evaluated

3 0 FEASIBILITY STUDY PROCESS

The recommendations provided in the Audit Report were screened to identify the most promising alternative for PP/WM, and subsequent detailed analyses in feasibility studies The recommendations of the audit report and comments on the feasibility of each recommnedation are provided in **Appendix A**

The evaluation of the Technical Feasibility of the selected option is provided in Section 4 0 Section 5 0 provides an Opportunity Cost/Benefit Analysis, and Section 6 0 provides Conclusions and Recommendations

The recommendation selected for the detailed feasibility study is to upgrade the wastewater treatment system The reason for selecting this item is to insure adequate protection of surface and groundwater resources from potential contamination by YIC's high strength wastewater which currently is discharged to land irrigation without pretreatment The objective of the feasibility study is consistent with the primary concern of the WQICP, which is the protection of the quality of Jordan s water resources

The proposed wastewater treatment consists of a land treatment system preceded by an anaerobic wastewater pretreatment system

4 0 TECHNICAL FEASIBILITY EVALUATION

In this section, technical, economic and environmental feasibility analyses are conducted for each of the following options

1 Land treatment without pretreatment,
2 Land treatment following anaerobic pretreatment of concentrated wastes, and
3 Land treatment following anaerobic pretreatment of total wastewater flow

The following sections discuss the technical considerations and design parameters associated with land treatment and anaerobic pretreatment Evaluations of the economic and environmental feasibility of the selected options listed above follow the technical discussion

4 1 Land Treatment

Land treatment systems are natural wastewater treatment systems in which the wastewater is applied at the surface of the soil Land treatment can be classified into three main types

- Slow rate land treatment
- Rapid infiltration land treatment and
- Overland flow land treatment

The type of land treatment system selected for consideration at YIC is the Slow Rate (SR) land treatment process SR land treatment is characterized by the application of wastewater to a vegetated surface to be treated as the wastewater flows through the plant-soil matrix A portion of the flow is used by the vegetation while some percolates to the confining layer or groundwater table This type of system has the highest treatment potential of the three soil-based systems listed above due to relatively low application rates combined with the very active ecosystem near the soil surface and has low operation and maintenance requirements

4 1 1 Existing Land Treatment System

The land treatment area currently being used is approximately 38 hectares, and the total available land for treatment purposes is approximately 60 hectares The site is located one kilometer northeast of the plant The distribution system consists of three 15 m storage tanks and a gravity distribution piping system of 4 in diameter headers and 2 in diameter secondary piping Water conveyed by the pipes is further routed on the land through trenches See ***Figure*** 3 for the existing system layout

Based on information from a study by the Center of Research and Water Studies of Jordan University (relevant portion provided in ***Appendix B***) the soil depth at the site varies from a few centimeters to 100 cm and the soil profile includes the following layers

A layer This layer is less than 6 cm thick and is composed of 15-20% clay, 70% silt, and 0 1% organic matter and plant roots The soil structure is prismatic

B layer This layer is approximately 50 cm thick and is composed of 10-15% clay, 75% silt additionally with calcarite in lower section The soil structure is prismatic and is considered permeable

C layer This layer is approximately 60 cm thick and consists mainly of caliche, including 15% of silt Caliche is typically considered low permeability, although it is possible that the layer may contain fractures through which water may quickly reach the water table

The land treatment area currently supports various trees, shrubs, and grasses The types of trees present are Kinya, Accacia, and pine

4 1 2 Design Parameters

A properly designed SR land treatment system can effectively remove Biochemical Oxygen Demand (BOD) and nitrogen from wastewater through natural filtration, adsorption nitrogen uptake by vegetation, and nitrification-denitrification processes However the heavy loadings of BOD and nitrogen at YIC, combined with the high salinity of the local well water and the arid climate present a significant challenge for developing a successful land treatment system The plan for improving the land treatment system was developed based on design parameters including

- BOD loading,
- Nitrogen loading,
- Phosphorus loading
- Soil permeability,
- Salt loading and
- Irrigation requirements

Consideration must be given to each of the above factors to determine a hydraulic loading rate for the SR land treatment system which allows for efficient wastewater treatment while providing sufficient amounts of water to sustain crop growth Each of the above parameters are discussed below with this in mind

BOD Loading Removal of BOD is accomplished by soil adsorption and bacterial oxidation SR systems can typically remove substantial amounts of BOD Systems using food processing wastewater are often loaded at 55 to 220 kg/ha/day (source Natural Systems for Wastewater Treatment WEF Manual of Practice FD-16) At YIC during the month of maximum irrigation requirements (June in which ET - Pr = 27 1 cm as shown in Table 4) the loading rate for

untreated wastewater would be substantially higher Given that the BOD concentration of untreated effluent is 5,400 mg/l, the loading rate would be 489 kg/Ha/day (5400[mg/l]/1000[kg/m3/mg/l]x0 271[m/month]/30[day/month] *10000[m2/Ha]) In order to be in the 55 to 220 kg/ha/day range, the BOD would need to be reduced by pretreatment to the range from 608 to 2,435 mg/l However, at YIC the wastewater application rate necessary for irrigation purposes (174 cm per year, as discussed in this section under Irrigation Requirements) would imply a BOD loading rate of approximately 436 kg/ha/day This value was derived from the BOD concentration of around 6000 mg/l in the plant effluent without prior treatment Based on the amount of land that can be successfully irrigated at YIC, the concentrations of the wastewater would have to be brought down to 757 - 3028 mg/l to correspond to the 55 to 220 kg/ha/day mentioned above Therefore, the loading without preceding treatment exceeds the range for effective BOD treatment Furthermore, the odors associated with high BOD wastewater present other problems for spray irrigation systems These findings further emphasize the need for wastewater treatment preceding the land treatment system With the BOD concentration reduced by anaerobic treatment, as discussed later in this report the wastewater will be well within the acceptable range for land treatment

Nitrogen Loading Nitrogen loading and removal rates are important parameters when designing a land treatment system For SR systems located above potable aquifers, nitrogen concentration in percolate must be low enough that the groundwater quality at the project boundary can meet drinking water nitrate standards Nitrogen removal mechanisms at SR systems include crop uptake, nitrification-denitrification ammonia volatilization and storage in the soil The Jordan Standard 202 states that water used for irrigation purposes must have a total nitrogen concentration of lower than 50 mg/l and the drinking water requirements set the limit for NO in drinking water at 45 mg/l In the US the standard for percolated water reaching an aquifer below a treatment site is 10 mg/l nitrogen Percolate nitrogen concentrations less than this limit can be achieved through the combined nitrogen removal mechanisms by applying wastewater that meets the Jordan irrigation standard The design equation used by the USEPA to determine the hydraulic loading for a SR system based on nitrogen is given below

$$Lw_{nitro} = \frac{Cp \times (Pr - ET) + U \times 10}{(1 - f) \times Cn - Cp} \qquad \textit{Equation 1}$$

where

Cp = Nitrogen concentration in percolating water (10 mg/l)
Pr = Precipitation rate

ET = Evapotranspiration rate
U = Nitrogen uptake by vegetation
f = Fraction of nitrogen removed by denitrification and volatilization
Cn = Nitrogen concentration in wastewater (50 mg/l)

For using the above equation for the YIC site (see ***Tables 4 & 5***), nitrogen concentrations in the percolating water (Cp) was taken as 10 mg/l in accordance with the US standard for percolated water Precipitation rate (Pr) and evapotranspiration (ET) were taken from local records Plant nitrogen uptake (U) was assumed to be 540 kg/ha/yr which corresponds with the nitrogen uptake for alfalfa (the crop used for feasibility-level design calculations) The annual value for U was converted into monthly uptake rates by assuming proportionality with ET The fraction of nitrogen removed by denitrification and volatilization (f) was assumed to be 0 2 (typical value), although the pressurized spray distribution system recommended at YIC may allow for more ammonia volatilization, which corresponds to a higher value for this parameter Finally, the nitrogen concentration in the applied wastewater (Cn) is a parameter that varies according to effluent characteristics and levels of pretreatment

The design hydraulic loading rates calculated for the land treatment system with no pretreatment is shown in ***Table 4*** The total nitrogen concentration in the untreated wastewater is 871 mg/l as shown in ***Table 6*** In this case, nitrogen concentration severely limits the allowable hydraulic loading rate so that only 7 8 cm/year can be successfully treated This wastewater loading rate in conjunction with precipitation (16 5 cm/year) would supply only 13 percent of the yearly evapotranspiration demand (191 1 cm/year), which is the required amount of water for sustainable plant growth Nitrogen levels, therefore, must be reduced with pretreatment prior to land application

Table 5 represents the treated effluent to the nitrogen level of 50 mg/l which meets compliance with Jordanian Standards 202 The result of this calculation shows that nitrogen is still a limiting factor The allowable loading rate however, is increased to 133 0 cm/year, which combined with the annual precipitation rate, makes up 78 percent of the evapotranspiration demand This loading rate is within the range where plant growth can be sustained Actual nitrogen removal efficiency, furthermore will be thoroughly evaluated in the demonstration phase

Phosphorus loading Phosphorus is removed in a SR system through chemical precipitation and adsorption reactions in the soil, and to a lesser extent through plant uptake The phosphorus sorption capacity of a soil profile depends on the amounts of clay, aluminum, iron and calcium compounds present and the soil pH In general fine textured mineral soils have the highest phosphorus sorption

capabilities

The soil profile can be considered to have finite phosphorus sorption capacity associated with each layer Eventually, the sorption capacity of the entire soil profile may reach saturation and soluble phosphorus will appear in the percolate However, the adsorptive capacity for even sandy soils is quite large and therefore phosphorus is typically not considered a factor for design

Soil Permeability The other design parameter often found to be critical in developing a land treatment system is the soil permeability Based on the soil description provided (see ***Appendix B***), a conservative estimation 190 cm/yr (approximately 10^{5} cm/s) percolation rate corresponding to a moderately slow permeability, was used for design calculations Using this estimation, the hydraulic loading governed by permeability was developed with the equation shown below from the USEPA

$$Lw_{perm} = ET - Pr + Pw \qquad \textbf{Equation 2}$$

where

ET = Evapotranspiration rate
Pr = Precipitation rate
Pw = Percolation rate

The design hydraulic loading rates due to permeability are also presented in ***Tables 4 & 5*** and it can be seen that the permeability is never the limiting factor in this application when compared to the loading rate due to nitrogen for the designated land area

Salt Loading Another area of concern related to the land treatment area is the build-up of salts in the soil Due to the high rate of evaporation and evapotranspiration throughout most of the year, the salts that are present in the raw well water are concentrated in the soil over time Since high concentrations of salts in the soil will limit, or even completely stop plant growth the only ways to manage this problem is to reduce the amount of salts in the wastewater being applied, or provide a drainage system for soil leaching or flushing This can be accomplished by water treatment upon receiving the well water into the plant or by reducing the salt content following treatment Without removing the salinity from the water however crops can be cultivated on the land but it must be understood that this use of the land will not be sustainable as a long-term solution without implementing measures to restore the soil

Irrigation Requirements In order to sustain the growth of crops such as alfalfa or grazing grasses enough water must be supplied to meet the irrigation requirements of the plants cultivated This means that the hydraulic loading rate for the land treatment system must also be designed with this parameter in mind In Jordan, where evapotranspiration greatly exceeds precipitation, the irrigation requirement represents a large amount of water This parameter, therefore determines the minimum loading rate required for a viable land treatment system

The precipitation and evapotranspiration data recorded at weather stations in the region of the YIC are supplied in ***Appendix C*** The annual evapotranspiration value is given as 191 cm Precipitation on the other hand, is only 17 cm per year The objective of irrigation, therefore, is to significantly close the wide gap between evapotranspiration and precipitation Given the present wastewater flow of 545 m^3/day the total area of the land treatment system must not exceed 7 5 hectares in order to meet the objective The applied wastewater must also be pretreated to levels compatible with this loading rate

4 1 3 System Components

The above design parameters were all taken into account when developing the feasibility-level system design The parameter that guided the design of the land treatment system was the irrigation requirement for growing crops in the area The pretreatment facilities were therefore designed to provide an effluent quality such that given the required application rate for irrigation and the estimates of SR land treatment removal efficiencies irrigation requirements and nitrogen standards were able to be met

The following items must be discussed to properly define system design

- Crop selection
- Distribution method
- Storage requirements and
- System operation

These are discussed below

Crop Selection The process of selecting which type of vegetation to be cultivated in the treatment system involved accounting for the intended use for the land nitrogen uptake by the crop, and the crop s tolerance to salinity Based on the topography of the land treatment area the decision was made to pursue a forage crop that can be used for grazing Using the land in this way allows a less labor-intensive solution that also avoids the need to perform costly grading work

A number of possible forage crops were identified in ***Table 7*** for this application along with their respective nitrogen uptake potentials, and salt tolerances In the demonstration phase of this project several options can be explored to aid in making the final crop selection Alfalfa, however, is used for all design calculations in this feasibility study Additional crop information is provided in ***Appendix D***

Distribution Method The land treatment and irrigation system will be operated in such a way that 7 5 hectares will be irrigated with the required amount of water to sustain crops The system will be set up with one 6-inch PE main pipe supplying water to 15 hectares with a minimum pressure of 30 lb /in ^{2} From the main header, 44 4-inch PE laterals will be attached at 12 meter intervals Half of these laterals will be used to supply the water for land treatment on 7 5 hectares (***Figures 4 & 5***) Along the laterals 9/64 x 3/32 sprinklers will be installed every 6 meters discharging 16 l/min Each lateral will have 46 sprinklers, so the total discharge for each lateral in use will be approximately 700 l/min For a week-long period during peak demand, 3,800 m^3 will be applied, or approximately 5 cm over the 7 5 hectares This area will be uniformly irrigated with the wastewater through a pressurized sprinkler system Sprinklers are required because a forage crop is proposed

Storage Requirements The upgraded land treatment system is designed to supply the irrigation demand in summer months with the total wastewater flow from the facility During the winter months however, the precipitation rate increases while the evapotranspiration decreases The demand on water for irrigation therefore also decreases The excess water accumulating during this time (December January and February) must be stored in order to be used when the demand for water increases again The size of the storage pond needed is estimated at 25 000 m^3 which is the equivalent of 1½ months The proposed storage pond is formed by an embankment located in a natural depression as shown in ***Figure 4*** The pond capacity is 60 000 m^3 to allow for capture of runoff

Since the stored wastewater will contain high levels of BOD, even if pretreated septic conditions are likely to occur and odors may become a problem To avoid this condition three 7 5 HP horizontally-mixing aspirating aerators are proposed to maintain oxygen levels at approximately 2 0 mg/l throughout the pond This type of surface aerator is mounted on floating pontoons, which allows it to adjust to changing pond levels The aerators additionally provide mixing It is recommended that the proposed irrigation pumping station at the pond be provided with the ability to recirculate wastewater from the bottom of the pond to give further mixing

System Operation The objective of the operation will be to complete one rotation of all 22 laterals in 6 days This breaks down to be 4 laterals per day for five days, and 2 laterals for the last day of the weekly cycle During peak months the application will be 16 hours per day, or 4 hours per lateral Which relates, once again, to approximately 5 cm applied per week during the peak operation

The upgraded land treatment system will be located on the same plot of land as the existing system east of the facility See ***Figure 4*** for a layout and location of the proposed system

Maintaining the upgraded land treatment system will not require much additional operational labor The anticipated tasks for the new system include operating and maintaining the pumps, directing the flow of water to the land via valves and piping

4 2 Anaerobic Treatment

As discussed in Section 4 1 2 the amount of water applied to the land treatment system is governed by irrigation requirements Therefore, the quality of the wastewater applied must be compatible with the land treatment capabilities Since such treatment capabilities are site specific actual levels of treatment capabilities must be determined by pilot studies, which may be carried out in the Demonstration Phase of the IWDPP Recommended demonstration projects are discussed in Section 5 2

Anaerobic treatment is a strong option for treating wastewater at yeast manufacturing facilities due to the high BOD and COD concentrations in the wastewater Anaerobic treatment technology presents many advantages when compared to trying to treat the entire waste stream aerobically These benefits are tremendously lower sludge production which serves to greatly alleviate disposal problems, production of usable energy in the form of methane gas, space efficiency and significantly lower operating costs due to low energy consumption and ease of maintenance

The Upflow Anaerobic Sludge Blanket (UASB) technology is one type of anaerobic process that provides high purification fast hydraulic throughput, and has the advantage of energy recovery by production of directly combustible methane gas The general process consists of a simple system which is easy to operate and maintain There are no moving parts within the digester vessel and there is no expenditure of energy to bring the biodegradable substances in contact with the biomass

Another type of anaerobic treatment successfully applied today is the fluidized bed technology This technology has many of the same advantages described above for the UASB system, such as low sludge production short detention times, and the production of usable methane The fluidized bed application is often very comparable in expected performance and cost to the

UASB technology, but is not as widely used in the yeast industry Based on the worldwide record of UASB success within the yeast industry (including facilities in Israel and Saudi Arabia), this process is chosen to be further developed in the following cost summary

4 3 Feasibility Analysis

4 3 1 Existing Wastewater Treatment System

The existing wastewater treatment facility is not currently in operation The use of the wastewater treatment plant was discontinued reportedly due to high levels of odor and its inability to manage surges from the batch production of yeast Some of the tanks are currently used for attenuation before the wastewater is pumped to the land treatment area

The wastewater flows through the inactive treatment facility in the following steps

- The wastewater is pumped from the collection basin into the equalization tanks There are three 170 m^3 equalization tanks (above which are two biological towers measuring 3 66m x 3 66m x 5m high) and two 49 m equalization tanks

- The wastewater overflows from tank to tank then flows sequentially into four aeration tanks, each approximately 80 m in volume

- From the last aeration tank the wastewater overflows to a 109 m^3 circular clarifier

- Then it is filtered and pumped 750 m to the land treatment area via a 5 in diameter force main See ***Figure 6*** for a layout of the existing system

A number of sources exist which provide data for the effluent quality at YIC These sources range from one-time sampling events to record spanning years When data from these sources show conflicting or different results, the data with the broadest sampling base was typically used ***Table 6*** presents a summary of the available data regarding effluent quality for YIC and highlights the data used for the purposes of this report

4 3 2 Treatment Options

Three options for feasibility analysis are discussed in this section no pretreatment pretreatment for concentrated wastes only ***(Figure 7)*** and pretreatment for total wastewater flow ***(Figure 8)*** The selected option is then further developed

Land Treatment Without Anaerobic Pretreatment Given the characteristics of the YIC wastewater and the typical performance of a land treatment system it is very unlikely that the land treatment alone can achieve appropriate levels of treatment in particular for BOD and nitrogen This creates the potential for

odors, health risks, and groundwater contamination While the option of using land treatment with no pretreatment will not be further considered in the feasibility analysis, it is recommended that a pilot study for untreated waste be performed on the land treatment system to evaluate the performance of land treatment under high loadings, and thereby determine the level of pretreatment required

Land Treatment Following Pretreatment of Concentrated Wastes

The expected performance of a UASB system for treating only the concentrated wastes (flow from separators #1 and #2) is similar to the system for treating the entire waste stream, which is presented in detail in the following section BOD and COD removal efficiencies for UASB are expected to be around 70 percent and 90 percent, respectively However, a comparison of the system requirements associated with the different flows and concentrations reveals the following

- **Digester volume** Although the flow into the UASB digester would be less if only the concentrated wastes were treated, the digester volume would be 1 75 times as large The required digester volume for the 260 m /day concentrated flow would be 700 m while the less concentrated total flow of 545 m^3/day would only require a 400 m^3 digester

- **Hydraulic detention time** Due to internalized recycling necessary to bring the heavily loaded wastes from separators #1 and #2 to lower concentration levels for efficient treatment, the hydraulic detention time of the concentrated waste system is substantially greater (65 2 hours) than that for the total wastewater flow (17 5 hours)

- **Space** The space needed for the system to treat the concentrated waste streams is approximately 370 m^2, while the space required for the treatment of the total wastewater flow is 280 m^2

- **Cost** The cost of the larger system for treating the concentrated streams is also estimated to be 20 percent higher

The comparisons discussed above are shown in more detail in ***Table 8*** The conclusion of these comparisons is that it is more efficient to treat the total flow of wastewater at YIC than to try to treat the discharges from separators #1 and #2 separately

Land Treatment Following Pretreatment of Total Wastewater Flow As discussed above treatment of the entire wastewater flow is more technically and cost effective than treating only the concentrated wastes This option therefore is recommended and further developed in the following sections

4 3 3 System Components

The proposed pretreatment system to treat the total waste stream will maximize the use of existing facilities in order to reduce the costs and satisfy space requirements The components of the suggested system are listed below

- Attenuation,
- Anaerobic pretreatment,
- Sedimentation,
- Filtration
- Ammonia removal, and
- Sludge handling

Each component is discussed below

Attenuation The existing stabilization tank can continue to serve as attenuation for the total wastewater flow in the proposed system The stabilization tanks are needed to equalize the surges coming into the treatment plant when the batch separators are discharging By using the existing tank the costs and space requirements will be minimized

Anaerobic Pretreatment An UASB system, as described in the previous section is proposed to treat the total wastewater flow There are two main tanks needed in the UASB system The first is a 180m^3 conditioning tank, in which the incoming wastewater is neutralized and enhanced with nutrients before entering the digester The conditioning tank volume requirement is closely matched to the volume of the north partitions of the stabilization tanks (190 m^3) Therefore, with some modifications the wastewater conditioning can be accomplished using part of the existing stabilization tank

The digester itself is the other tank needed in the system The digester volume necessary to treat 545 m^3/day would be 400 m The existing aeration tanks provide a volume of approximately 320 m and with some alterations to increase the sidewalls and remove the partitions can be used as the digester tank By using the existing aeration tanks in the proposed system, the cost will be minimized and the space limitations will be accomodated See ***Figure 9*** for layout of the proposed pretreatment system

The temperature requirement for the UASB process is approximately 32° C The wastewater effluent at YIC is approximately 10° C below this level, and therefore needs to be raised One possibility for accomplishing this is to run a steam line from the plant to the conditioning tank preceding the anaerobic digester The methane produced by the digester furthermore has the potential to be captured

and reused as fuel for steam production to offset some operating costs

The two main shortcomings identified at the abandoned wastewater treatment plant were the odor problem and the lack of surge capacity to handle the batch production process Both of these issues are remedied by using the UASB treatment process An odor control system built into the system contains the odorous gases and provides treatment prior to release Due to the high shock and surge resistance of UASB systems, furthermore, the proposed system will easily handle the fluctuating flows and loadings common at YIC

Sedimentation The existing circular clarifier can be used in the recommended treatment system The volume of 109 m^3 corresponds with a surface overflow rate of 11 8 $m^3/day/m^2$ (289 gpd/ft^2), which provides ample settling capacity for removal of most suspended solids A cover for the existing sedimentation basin is provided to control potential odor problems

Filtration If the suspended solids from the effluent from the anaerobic treatment unit are especially fine or unsettlable, filtration may be needed to eliminate the solids prior to air stripping Standard industrial multi-media filters can be used effectively for this application A pumping station and two multimedia pressure filter are provided for filtration

Ammonia Removal The untreated wastewater at YIC has a total nitrogen level of 871 mg/l according to tests performed in March 1995 shown in ***Table 6*** This nitrogen loading is expected be slightly reduced by the anaerobic treatment while the remainder of the incoming nitrogen will be transformed into ammonia nitrogen In order to remove the ammonia from the wastewater further treatment must be added

Air stripping provides effective ammonia removal and is widely used for this purpose throughout the world The advantages of air stripping are high removal rates (up to 90 percent), and low operational requirements To remove ammonia from the effluent however the pH of the wastewater must be raised to approximately 11 prior to the air stripping tower Furthermore, the ammonia volatilized in the stripping towers may also need to be collected and passed through a sulfuric acid scrubber to control the harmful air emissions and generate ammonium outfall and the pH should also be neutralized following treatment Three air strippers are provides

Sludge Handling The proposed UASB system will generate 2 m^3 per day of sludge at a solids content of approximately 10 percent, which is a much lower quantity than that produced by a conventional activated sludge system, such as the existing Therefore the existing sand drying beds should be adequate for the new system with minimal improvements The dried sludge can be used as a soil

ammendment, however, it is not recommended that the same portion of the YIC site used for land treatment receive the sludge, since it will further increase the nitrogen loading in an area where nitrogen is the limiting parameter

35

5 0 Opportunity Cost/Benefit Analysis

5 1 Economic Cost/Benefit Evaluation

5 1 1 Costs

The following evaluation of costs is based on a treatment system to manage the current wastewater flow of 545 m^3/day By implementing the pollution prevention and waste minimization measures outlined in the audit report recommendations, however, the system size and cost requirements can potentially be reduced by as much as 25 percent This 25 percent cost reduction is estimated based upon assuming proportionality of the cost with the reduced projected wastewater flowof 397 m^3/day associated with the implementation of these measures

For budgetary guideline purposes, a cost estimate for treating the entire wastewater flow is presented in ***Table 9*** The table provides costs for the land treatment system and costs for the pretreatment system

- The cost estimate for the land treatment distribution system is compiled from local Jordanian pricing information for equipment and installation costs The total cost estimate for the land treatment upgrade is JD 42 800

- The cost for the wastewater storage pond is based on local Jordanian pricing information, except for the aeration system, which is based on US supplier information The total cost for the storage system is JD 184,200 This pond provides storage for YIC wastewater during the rainy season and for site runoff

- The cost for the anaerobic component of the treatment upgrade would be approximately JD 531 600 for pretreatment of concentrated waste streams and JD 1 374 500 for pretreatment of the total wastewater flow This amount was determined from the cost estimates of UASB systems installed in the US A 15 percent reduction was used to account for the lower installation rates in Jordan By reusing the existing tanks as much as possible in the proposed system some limited additional cost amounts have been subtracted from the base estimate The cost for the anaerobic digester and accessories includes the digester vessel and foundation patented settlers digester feed distribution system, internal recirculation capability conditioning tank complete with mixer and foundation process piping between conditioning tank and digester, chemical dosing system (excluding bulk storage) instrumentation for automated control, pressure regulating valve to maintain gas backpressure within the digester vessel, feed pumps and reversible sludge pump automatic safety flare, odor control, and innoculant charge of biomass from existing Biothane unit

- The additional pretreatment equipment proposed in the system is estimated to cost

JD 289 300 Included in the cost are a pumping station for filtering two multimedia filters, and two air stripping towers complete with pH adjustment equipment

The total cost of the proposed system, including 20 percent for shipping of imported equipment and a 20 percent contingency, is estimated at JD 1,056,000 for treatment of concentrated waste streams and JD 1 374 500 for treatment of concentrated waste streams only

Table 10 presents operation and maintenance costs for both alternatives Total costs are JD 56,400 with pretreatment of concentrated wastes and JD 53,500 with pretreatment of total wastewater flow

Table 11 presents equivalent costs for a 20-year project life and 6 0 percent interest rate The equivalent costs are provided per year per day, per cubic meter of treated wastewater, and per ton of yeast It is noted that the equivalent cost per ton of yeast is JD 36 for pretreatment of concentrated wastewater and JD 33 for pretreatment of total wastewater flow This represents approximately __ percent of the wholesale price of a ton of yeast (JD___ per ton)

5 1 2 Benefits

Although it is claimed that the existing land treatment system operates successfully our analysis shows that without pretreatment the nitrogen loading becomes a critical factor Given the high nitrogen concentration in the untreated wastewater the allowable application rate is much less than evapotranspiration and therefore cannot support plant life If the application rate is increased to match evapotranspiration, then the nitrogen concentration exceeds the soil and vegetation removal capacity

The odor due to biodegradation of concentrated organics may become another problem when high organic loading rates are used for land treatment Such odor can be a nuisance and may pose health hazards due to the presence of sulfur and methane related compounds in odorous emissions

The success for direct application of wastewater without pretreatment is not in our opinion fully established with rigorous monitoring data, treated effluent and groundwater monitoring Observed growth of certain vegetation appears to be the only parameter to prove that environmentally the existing system works

The application of untreated wastewater in our opinion needs to be proven successful and reliable with rigorous monitoring data, mass balances and monitoring of vegetation, soils and groundwater during at least 3 to 5 hydrological cycles (3 to 5 years) to be accepted This will also help gain acceptance by public and regulatory agencies

We therefore have recommended that a demonstration facility be implemented To provide a comparison, one portion should use untreated wastewater while another should use pretreated wastewater

The cost of pretreatment of wastewater is relatively high, but the long term impact of the pretreatment/land treatment option could be that the yeast industry can continue to operate the existing facility and even expand the same with this sound environmental program, rather than risking reduced plant operation due to land treatment constraints

The YIC wastewater treatment project if successfully implemented, can provide a model of effective waste management and can be followed by other industries which also currently discharge wastewater to land irrigation The cost of implementing this project must be shared by the government, other financial sources and industry as a role model for other industries

5 2 Environmental Evaluation

The implementation of an upgraded land treatment system will provide an effective way to treat the wastewater at YIC The water used at the facility can be used to recharge the groundwater and to cultivate crops Nutrient and BOD loadings in the present wastewater stream, however pose definite concerns for the extended use of the land

The nitrogen concentration in the applied wastewater must be brought down from 870 mg/l to 50 mg/l to comply with the Jordan standard 202 The effectiveness of land treatment of nitrogen will be greatly enhanced with this decrease in loading, and is expected to produce a final effluent of less than 10 mg/l in the percolate

The current BOD concentrations in the wastewater must also be reduced prior to land treatment Anaerobic treatment is a proven effective way of treating BOD in yeast facility effluents, and the following sections will present alternatives for bringing down the loading to a level that can be successfully treated by the soil

The expected result of treating the total wastewater flow with anaerobic treatment and ammonia removal is an effluent that can be applied to the land treatment system Approximately 90 percent BOD reduction is anticipated from the anaerobic treatment process, which would produce a concentration of approximately 600 mg/l This level is well within the optimal range for successful land treatment The ammonia removed from the air strippers is also expected to produce the required quality of less than 50 mg/l for irrigation

6 0 CONCLUSIONS AND RECOMMENDATIONS

6 1 Conclusions

The most effective solution for managing the strong wastewater at YIC is to add anaerobic treatment, filtration, and air stripping for the total wastewater flow utilize the existing tanks and clarifier and upgrade the land treatment application Using this system, the BOD and nitrogen concentrations will also be reduced enough to protect surface and groundwater resources

6 2 Demonstration Project Recommendation

There are issues associated with how the wastewater effluent relates to the effectiveness of land treatment that must be addressed in the demonstration phase For a demonstration project two small plots of land should be developed to receive two representative effluent qualities One plot will be irrigated with the current total effluent from the facility, while the other plot will receive only the dilute wastes from the plant and the effluent from separator #3 This second situation will simulate the use of pretreated wastewater for land treatment

The focus of the demonstration project will be to verify the predicted effectiveness of land treatment at YIC The demonstration systems will be constructed so that the percolated water can be collected and monitored for nitrogen BOD and salinity A comparison will be performed between the percolate of the two systems to verify the effectiveness of BOD and nitrogen removal, and to verify the need for pretreatment The salinity of the soil and percolated water will also be monitored in order to develop a model for salt build up during the full scale operation

TABLES

Table 1
OVERALL WATER BALANCE ACROSS FACILITY[1]

Yeast Industries Company

Water Inflow (m^3/day)		Water Outflow (m^3/day)	
Well Water Pumped	626	Separator Discharge	390
Molasses Moisture	10	Cooling System	56
		Tank Washing	54
		WWTP Cleaning	50
		Floor/Lab Washing	21
		Boiler Make-Up Water	20
		Filter Cleaning	10
		Filter Press and RVF	10
		Dryer Exhaust	10
		Product Moisture	10
		Regeneration	3
		Chiller Make-up	1
		Valve Operator	1
TOTAL	636		636

1 Domestic water is supplied by the Water Authority of Jordan and domestic wastewater is discharged to the on-site septic tank Daily domestic water consumption is 10 m^3

Table 2
SUMMARY OF WASTEWATER SOURCES[1]

Yeast Industries Company

Source	Volume (m^3/day)
Process Wastewater	
Separator Discharge	390
Filter Press and RVF Filtrates	10
Equipment Cleaning Wastewater	
Tank Washwater	54
WWTP Cleaning	50
Filter Cleaning	10
Floor Washwater (including lab)	20
Cooling System Wastewater	6
Regenerant Wastewater	3
Valve Opener Wastewater	1
TOTAL	545

1 Domestic wastewater is generated at a rate of approximately 10 m^3/day

Table 3
PROPOSED WATER REDUCTION, RECYCLE AND REUSE[1]

Yeast Industries Company

Source	Water Usage (m^3/day)		
	Current	Projected	Savings
Separator Discharge (including filtrate return)	390	330	60
Cooling System	56	6	50
Tank Washing	54	27	27
WWTP Cleaning	50	0	50
Floor/Lab Washing	21	13	8
Boiler Make-Up Water	20	20	0
Filter Cleaning	10	8	2
Filter Press and RVF	10	10	0
Dryer Exhaust	10	10	0
Product Moisture	10	10	0
Regeneration	3	2	1
Chiller Make-up	1	1	0
Valve Operator	1	1	0
TOTAL	636	438	198

1 Domestic water is currently consumed at YIC at a rate of approximately 10 m^3/day It is expected that consumption can be reduced by 20 to 40 percent

2 If in the future, an Overcash Water Recovery System is implemented to recover separator #1 effluent an additional 120 m^3/day water can be saved thereby reducing the pollution load and water usage by 50 to 60 percent

Table 4
DESIGN LOADING RATE CALCULATIONS FOR UNTREATED EFFLUENT
Yeast Industries Company

Parameters

f =	0 2
Cn (mg/L) =	871
Cp (mg/L) =	10

	Data and Calculations						Loading Rates		Design Loading rate
Month	Pr (cm)	ET (cm)	ET,U Fraction	U (kg/ha)	Pw (cm)	$L_{W_{nitro}}$+Pr ET	$L_{W_{nitro}}$ (cm)	$L_{W_{perm}}$ (cm)	Lw (cm)
January	3 20	5 43	0 03	15 36	5 40	-2 01	0 22	7 64	0 22
February	3 97	6 90	0 04	19 51	6 86	-2 65	0 28	9 79	0 28
March	1 87	11 67	0 06	32 99	11 61	-9 33	0 47	21 41	0 47
April	0 69	18 74	0 10	52 98	18 64	17 29	0 76	36 70	0 76
May	0 13	25 40	0 13	71 78	25 26	24 24	1 03	50 52	1 03
June	0 00	27 08	0 14	76 55	26 94	25 99	1 10	54 02	1 10
July	0 00	22 47	0 12	63 50	22 34	-21 56	0 91	44 81	0 91
August	0 00	19 35	0 10	54 69	19 24	-18 57	0 78	38 59	0 78
September	0 00	19 00	0 10	53 70	18 90	18 23	0 77	37 90	0 77
October	0 89	16 00	0 08	45 22	15 91	14 46	0 65	31 02	0 65
November	1 55	12 00	0 06	33 92	11 93	9 96	0 49	22 38	0 49
December	4 23	7 00	0 04	19 79	6 96	2 49	0 28	9 73	0 28
Annual	**16 53**	**191 05**	**1 00**	**540 00**	**190 00**		**7 75**	**364 52**	**7 75**

Lw + Pr =	24 28
ET Demand =	191 05
(Lw+pr)/ET =	13%

Design Equations

$L_{W_{nitro}}$=(Cpx(Pr ET)+Ux10)/((1 f)xCn Cp) for $L_{W_{nitro}}$ Pr ET>0

$L_{W_{nitro}}$ =(Ux10)/((1-f)xCn Cp) for $L_{W_{nitro}}$+Pr ET<0

(i e Lwnitro for January = (15 36 x 10) / ((1 0 2) x 871 10))=0.22) Lwnitro+Pr ET=-2 01

$L_{W_{perm}}$ = ET Pr + Pw

(i e Lwperm for January= 5 43 3 20 5 40=7 64)

f = Fraction of nitrogen removed by denitrification and volatilization (typically 0 2)
Cn = Nitrogen concentration in wastewater [mg/l] (50 mg/L per Jordanian Standard)
Cp = Nitrogen concentration in percolating water [mg/l] (10 mg/L per USEPA)
Pr = Precipitation rate [cm] (data supplied by Ministry of Water and Irrigation)
ET = Evapotranspiration rate [cm] (data supplied by Ministry of Water and Irrigation)
U = Nitrogen uptake by vegetation [kg/Ha] (upper limit of alfalfa uptake range)
Pw = Percolation rate [cm] (conservative estimate of moderately slow permeability USEPA) prorated proportional to ET U fraction
Lwnitro = Hydraulic loading based on nitrogen limits [cm]
Lwperm = Hydraulic loading based on soil permeability limits [cm]
Lw = Design hydraulic loading [cm]

HARZA TBY REV2 XLS
10 13/95 12 06 PM

Table 5
DESIGN LOADING RATE CALCULATIONS FOR PRETREATED EFFLUENT
Yeast Industries Company

Parameters

f =	0 2
Cn (mg/L) =	50
Cp (mg/L) =	10

	Data and Calculations						Loading Rates		Design Loading rate
Month	Pr (cm)	ET (cm)	ET U Fraction	U (kg/ha)	Pw (cm)	L_{Wnitro}+Pr-ET	L_{Wnitro} (cm)	L_{Wperm} (cm)	Lw (cm)
January	3 20	5 43	0 03	15 36	5 40	1 05	3 28	7 64	3 28
February	3 97	6 90	0 04	19 51	6 86	1 21	4 14	9 79	4 14
March	1 87	11 67	0 06	32 99	11 61	1 55	8 25	21 41	8 25
April	0 69	18 74	0 10	52 98	18 64	-4 61	13.25	36 70	13 25
May	0 13	25 40	0 13	71 78	25 26	7 32	17 95	50 52	17 95
June	0 00	27 08	0 14	76 55	26 94	7 95	19 14	54 02	19 14
July	0 00	22 47	0 12	63 50	22 34	6 59	15 88	44 81	15 88
August	0 00	19 35	0 10	54 69	19 24	5 68	13 67	38 59	13 67
September	0 00	19 00	0 10	53 70	18 90	5 57	13 43	37 90	13 43
October	0 89	16 00	0 08	45 22	15 91	-3 80	11 31	31 02	11 31
November	1 55	12 00	0 06	33 92	11 93	-1 97	8 48	22 38	8 48
December	4 23	7 00	0 04	19 79	6 96	1 48	4.25	9 73	4 25
Annual	**16 53**	**191 05**	**1 00**	**540 00**	**190 00**		**133 02**	**364 52**	**133 02**

Lw + Pr =	149 55
ET Demand =	191 05
(Lw+Pr)/ET =	78%

Design Equations

L_{Wnitro}=(Cpx(Pr ET)+Ux10)/((1 f)xCn Cp) for L_{Wnitro} Pr ET 0

L_{Wnitro} =(Ux10)/((1 f)xCn Cp) for L_{Wnitro} Pr-ET 0

(i e Lwnitro for Jan (10*(3 2-5.43) (15.36x10)/((1-0 2)x671 10))-3 28) Lwnitro+Pr-ET 1

L_{Wperm} = ET Pr + Pw

(i e Lwperm for January 6 43 3 20 5 40=7 84)

f = Fraction of nitrogen removed by denitrification and volatilization (typically 0 2)
Cn = Nitrogen concentration in wastewater [mg/l] [50 mg/L per Jordanian Standard]
Cp = Nitrogen concentration in percolating water [mg/l] (10 mg/L per USEPA)
Pr = Precipitation rate [cm] (data supplied by Ministry of Water and Irrigation)
ET = Evapotranspiration rate [cm] (data supplied by Ministry of Water and Irrigation)
U = Nitrogen uptake by vegetation [kg/Ha] (upper limit of alfalfa uptake range)
Pw = Percolation rate [cm] (conservative estimate of moderately slow permeability USEPA) prorated proportional to ET U fraction
Lwnitro = Hydraulic loading based on nitrogen limits [cm]
Lwperm = Hydraulic loading based on soil permeability limits [cm]
Lw = Design hydraulic loading [cm]

HARZA TBY REV2 XLS
10/13/95 12 06 PM

Table 6
WASTEWATER QUALITY DATA

Yeast Industries Company

Source of Data		Flow (m3/d)	pH	BOD (mg/L)	COD (mg/L)	TSS (mg/L)	TDS (mg/L)	NH4 (mg/L)	Total N (mg/L)	P (mg/L)
Harza/RSS Sampling 10 Mar-95	Separator #1	130	7 15	14,443	22 800	2,938		456	2,405	
	Separator #2	130	7 10	12,220	16 800	953		60	400	
	Separator #3	130	7 15	1,079	1,600	933		42	891	
	Total Effluent	**545**	6 45	13,529	21,200	1,878		237		
COWIconsult report 1993	Total Effluent	550	**6 42**	**5,400**	**8,230**	**660**	**10,584**	**129**		**36.0**
RSS/AERC Sampling 1991	Total Effluent		6 26	8,650	16 807	752	14,356	224	**871**	29 0
WEC report 1992	Separator #1		6 10	27 334	58 277	2 116	51 024	230	3 035	9 8
	Separator #2		6 60	4 293	6,626	170	6,371	30	252	6 2
	Separator #3		6 80	960	1,370	151	663	4	39	3 6
WAJ records 1990 1993	Total Effluent		6 35	4,780	10,810	1,915	9,028	203		
Values Used In Report For Total Effluent		**545**	**6 42**	**5,400**	**8,230**	**660**	**10,584**	**129**	**871**	**36 0**

* Bold values indicate data used for design purposes

Table 7
NITROGEN UPTAKE AND SALT TOLERANCE FOR SELECTED CROPS*

Yeast Industries Company

Crop	Nitrogen Uptake Rate (kg/ha/yr)	Qualitative Salt Tolerances
Alfalfa**	225 - 540	Tolerant
Bromegrass	130 - 225	Moderately Tolerant
Bermudagrass	400 - 675	Tolerant
Reed Canarygrass	335 - 450	Moderately Tolerant
Ryegrass	200 - 280	Moderately Tolerant
Tall Fescue	150 - 325	Moderately Tolerant
Orchardgrass	250 - 350	Moderately Sensitive

* Nitrogen uptake values from USEPA s Process Design Manual for Land Treatment of Municipal Wastewater
Qualitative salt tolerances taken from Maas and Hoffman (1977) and FAO Guidelines R S Ayers & D W Westcot (1985)

** For design purposes the value of 54 kg/ha/yr was used to reflect the maximum uptake of alfalfa

Table 8
COMPARISON OF PRETREATMENT OPTIONS*
Yeast Industries Company

Item for Comparison	Concentrated Wastes	Total Flow
Digester Volume (m3)	700	400
Factory Flow (m3/day)	258	549
Recycle Flow (m3/day)	631	450
Hydraulic Detention Time (hours)	65 2	17 5
Total COD Load Capacity (kg/m3/day)	12	11 3
Approximate Space Requirement (m2)	370	280
BOD Reduction (%)	90	90
COD Reduction (%)	73	70
Suspended Solids Reduction (%)	10	10
Methane Produced (m3/day)	2044	1058
Total System Costs (if built in US)	$US 1 100 000	$US 900,000

*Based on information provided by Biothane Inc

Table 9
COMPARISON OF CAPITAL COSTS
Yeast Industries Company

Pretreatment of Concentrated Waste Streams		Pretreatment of Total Wastewater Flow	
Item	**Cost (JD)**	**Item**	**Cost (JD)**
A Land Treatment Distribution System		**A Land Treatment Distribution System**	
1 Pump Station 1 (2 10 l/s 50 m head installed)	1 500	1 Pump Station 1 (2 10 l/s 50 m head installed)	1 500
2 Primary Distribution Piping (650 m 6 in PE installed)	3 700	2 Primary Distribution Piping (650 m 6 in PE installed)	3 700
3 Secondary Distribution Piping (6200 m 4 in PE installed)	14 000	3 Secondary Distribution Piping (6200 m, 4 in PE installed)	14 000
4 Valves (44 installed)	3 100	4 Valves (44 installed)	3 100
5 Sprinklers (2050 installed)	20 500	5 Sprinklers (2050 installed)	20 500
Subtotal	42 800	**Subtotal**	42 800
B Wastewater Storage Pond		**B Wastewater Storage Pond**	
1 Embankment (36 000 m3 installed)	108 000	1 Embankment (36 000 m3)	108 000
2 HDPE Bottom Liner (12 000 m2, installed)	51 600	2 HDPE Liner (12 000 m2)	51 600
3 Aeration System (3 units 7 5 HP surface aerators installed)	24 600	3 Aeration System (3 units 7 5 HP surface aerators installed)	24 600
Subtotal	184 200	**Subtotal**	184 200
C Anaerobic Treatment		**C Anaerobic Treatment**	
1 Anaerobic Digestor and Accessories (installe	608 000	1 Anaerobic Digestor and Accessories (installe	491 000
2 Reconfiguration of Existing Facilities	30 000	2 Reconfiguration of Existing Facilities	30 000
3 Control Building (7mx10m installed)	5 600	3 Control Building (7mx10m installed)	5 600
4 Improvements to exist sludge drying beds	5 000	4 Improvements to exist sludge drying beds	5 000
Subtotal	648 600	**Subtotal**	531 600
E Other Pretreatment		**E Other Pretreatment**	
1 Pumping Station 2 (2 wastewater pumps and wet well 10 l/s each 50 m head installed cost)	1 500	1 Pumping Station (2 wastewater pumps and wet well 10 l/s each 50 m head installed cost)	1 500
2 Filtration (2 units with backwash pumps)	26 900	2 Filtration (with backwash pumps)	26 900
3 Air stripping (3 units with pH adjustment)	166 200	3 Air stripping (with pH adjustment)	166 200
4 Installation (50% of E2+E3)	96 600	4 Installation (50% of E2+E3)	96 600
Subtotal	289 700	**Subtotal**	289 700
F Shipping of Imported Equipment (20% of C1x1/2 E2 and E3)	99 400	**F Shipping of Imported Equipment** (20% of C1x1/2 E2 and E3)	87 700
Subtotal	1 264 700	**Subtotal**	1 136 000
Contingencies (20%)	252 900	**Contingencies (20%)**	227 200
Total	**1 517,600**	**Total**	**1 363,200**

HARZA TBY REV2 XLW
10/14/95 12 40 PM

Table 10
COMPARISON OF ANNUAL OPERATION AND MAINTENANCE COSTS
Yeast Industries Company

Pretreatment of Concentrated Wastestreams		Pretreatment of Total Wastewater Flow	
Item	**Cost (JD)**	**Item**	**Cost (JD)**
A Land Treatment		**A. Land Treatment**	
1 Labor (2 technicians)	3 600	1 Labor (2 technicians)	3 600
2 Energy	1 800	2 Energy	1 800
3 Maintenance (5% of equipment cost)	3 400	3 Maintenance (5% of equipment cost)	3 400
Subtotal	8 800	**Subtotal**	8 800
B Pretreatment		**B Pretreatment**	
1 Labor (1 Mech Eng 4 technicians)	13 200	1 Labor (1 Mech Eng 4 technicians)	13 200
2 Energy	3 200	2 Energy	3 200
3 Chemical Usage	6 000	3 Chemical Usage	6 000
4 Maintenance (5% of equipment cost)	25 200	4 Maintenance (5% of equipment cost)	22 300
Subtotal	47 600	**Subtotal**	44 700
Total	**56,400**	**Total**	**53,500**

Notes

A1 Mechanical Engineer at JD 500/month=6 000/year
Technician at JD 150/month=1 800/year

A2 Pumping Station 1 at 5 4 kw*8760 h/year=47 000 kwh/year
Add 20% for other miscellaneous power requirements=56400
Energy cost =JD 0 032/kwh
Total Energy Cost=JD 1 800/year

A3 5% of items A and B3 from Capital Costs Table

B1 See Note A1

B2 Pumping Station 2 at 5 4 kw*8760 h/year=47 000 kwh/year
3 Aerators at 7 5 HP ea 17 kw 8760/4 h/year=37 200 kwh/year
Total 84 200 kwh/year
Add 20% for other miscellaneous power requirements (incl PS to irrig pond)=101 000
Energy cost =JD 0 032/kwh
Total Energy Cost=JD 3 200/year

B4 5% of items C1(x1/2) C3 and E from Capital Costs Table

HARZA TBY REV2 XLS
10/13/95 9 39 PM

Table 11
TOTAL COST ANALYSIS
Yeast Industries Company

Pretreatment of Concentrated Wastestreams		Pretreatment of Total Wastewater Flow	
Item	**Cost (JD)**	**Item**	**Cost (JD)**
Initial Capital Cost	1 517 600	**Initial Capital Cost**	1 363 200
Annual Operation and Maintenance Costs	56 400	**Annual Operation and Maintenance Costs**	53 500
Total Equivalent Costs*		**Total Equivalent Costs***	
Equivalent Yearly Cost	188 700	Equivalent Yearly Cost	172 300
Equivalent Daily Cost	517	Equivalent Daily Cost	472
Equivalent Cost Per Cubic Meter of WW	0 040	Equivalent Cost Per Cubic Meter of WW	0 036
*Equivalent Cost per ton of yeast***	36	*Equivalent Cost per ton of yeast***	33

Based on a 20 year project life and 6 0% interest rate
Based on a yeast production of 5200 tons/year

HARZA TBY REV2 XLW
10/14/95 12 44 PM

FIGURES

HARZA FS4 WPY
950909

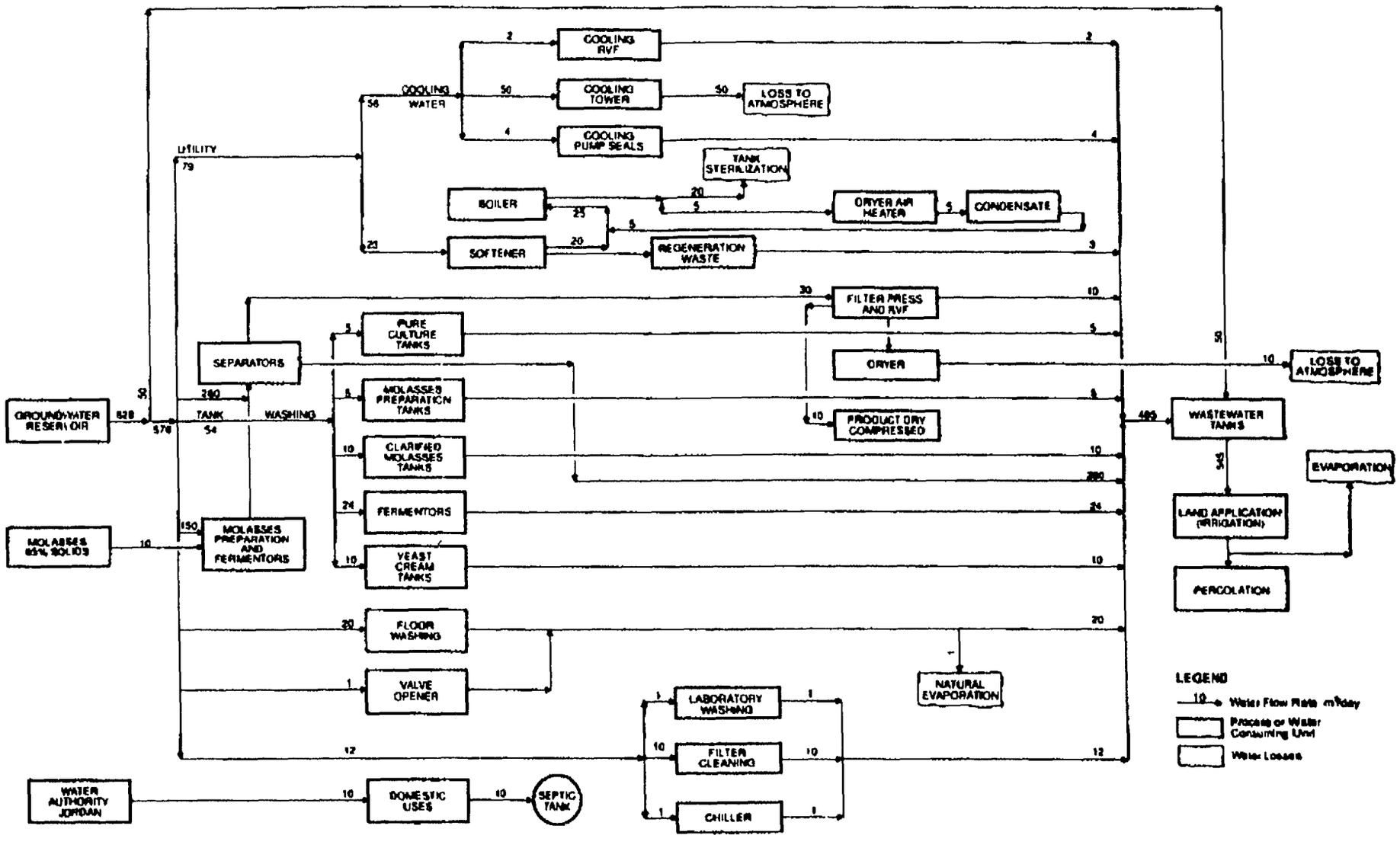

Figure 1

OVERALL WATER BALANCE

FEASIBILITY STUDY FOR YEAST INDUSTRIES CO., LTD

Ruseifa, Jordan

HARZA *Consulting Engineers and Scientists*

< \jordan\fig1.jpm3

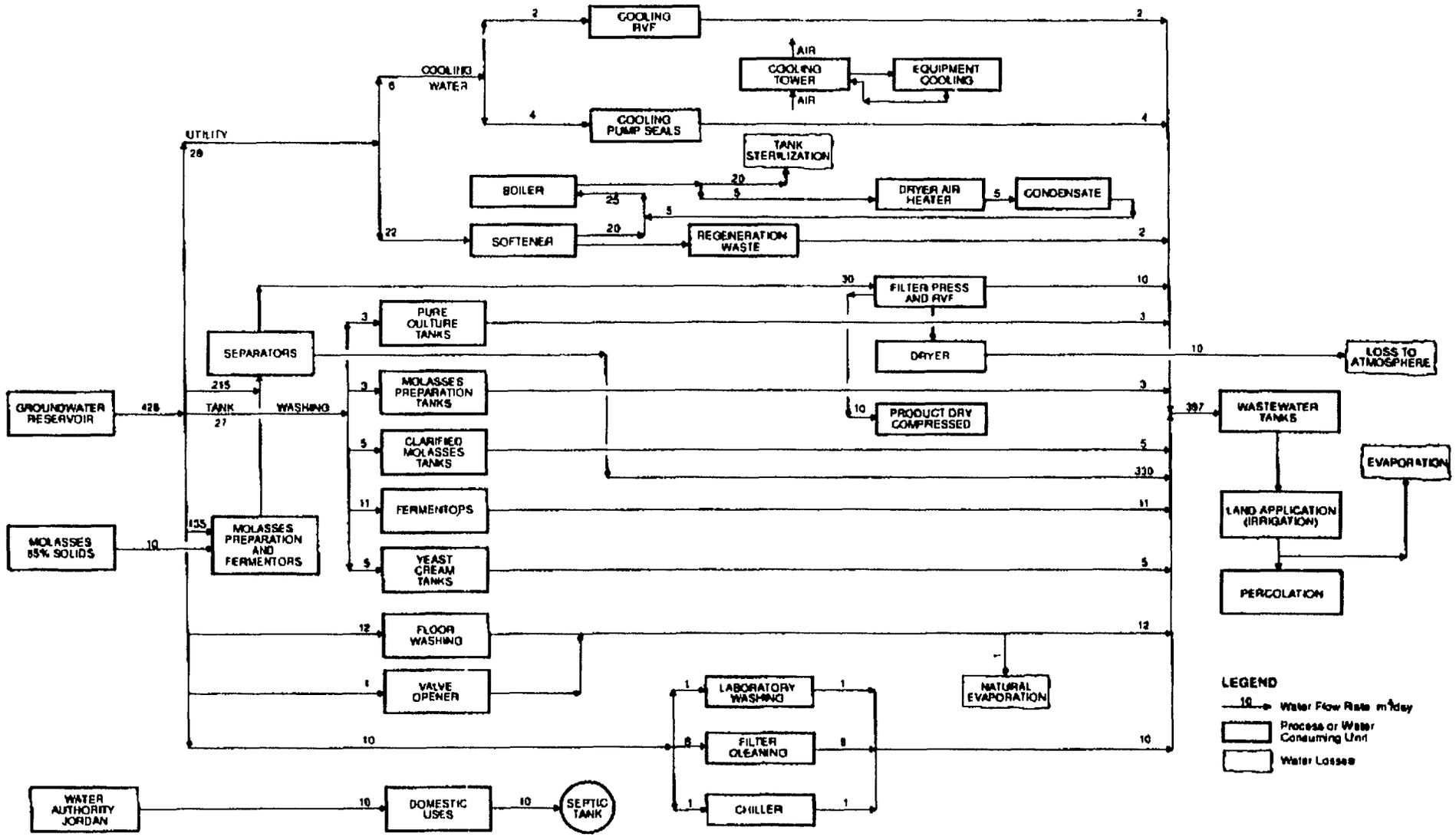

Figure 2

CONCEPTUAL WATER BALANCE

FEASIBILITY STUDY FOR YEAST INDUSTRIES CO., LTD

Ruseifa, Jordan

HARZA *Consulting Engineers and Scientists*

e:\jorda\fig2.pm5

52

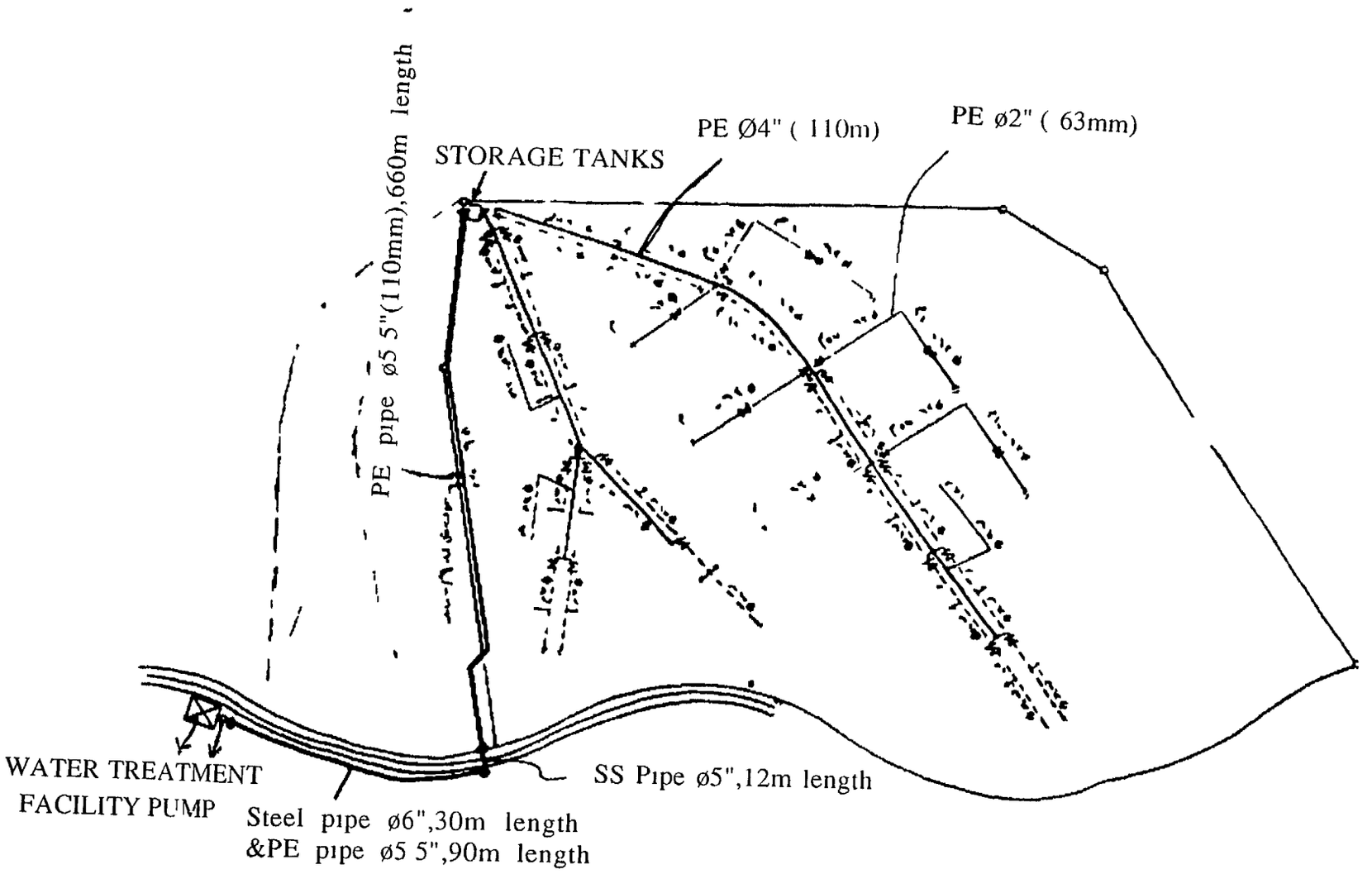

Figure 3

EXISTING LAND TREATMENT SYSTEM LAYOUT

FEASIBILITY STUDY FOR YEAST INDUSTRIES CO LTD

Ruseifa, Jordan

HARZA Consulting Engineers and Scientists

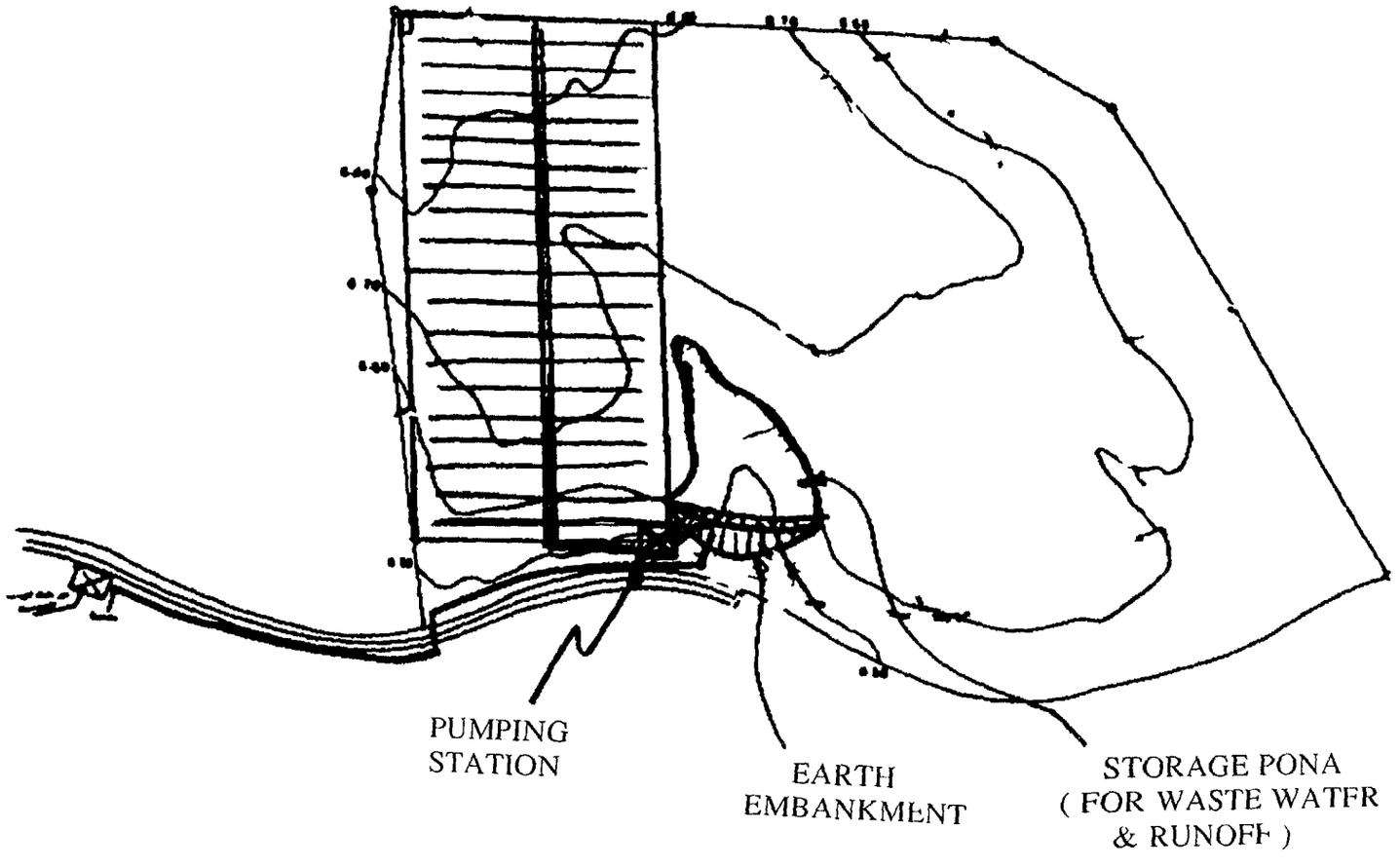

Figure 4

PROPOSED LAND APPLICATION SYSTEM LAYOUT

FEASIBILITY STUDY FOR YEAST INDUSTRIES CO , LTD

Rusefa, Jordan

HARZA Consulting Engineers and Scientists

c:\jordan\Ag2.pm5

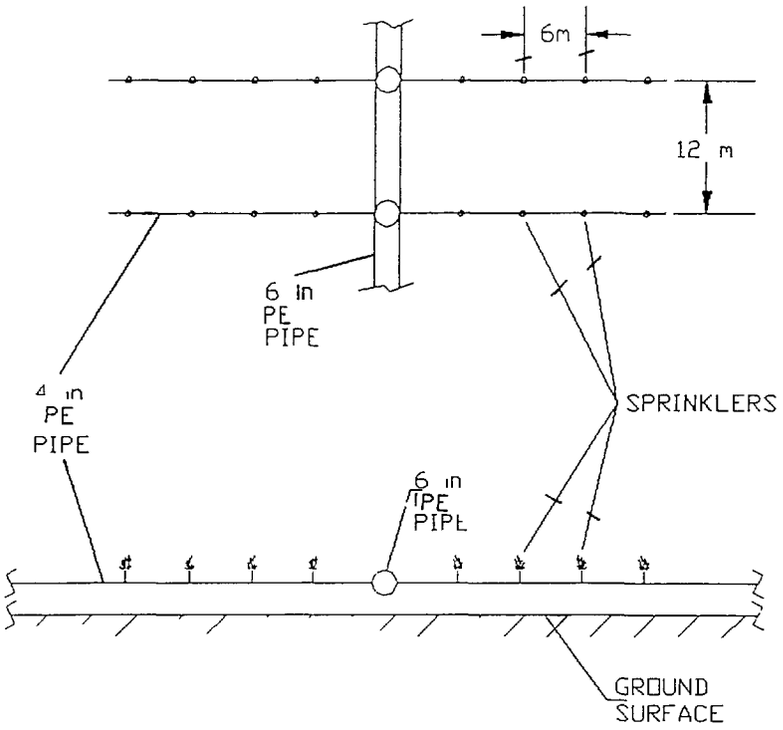

Figure 5

LAND APPLICATION DISTRIBUTION CONFIGURATION

FEASIBILITY STUDY FOR YEAST INDUSTRIES CO LTD

Ruseifa, Jordan

HARZA Consulting Engineers and Scientists

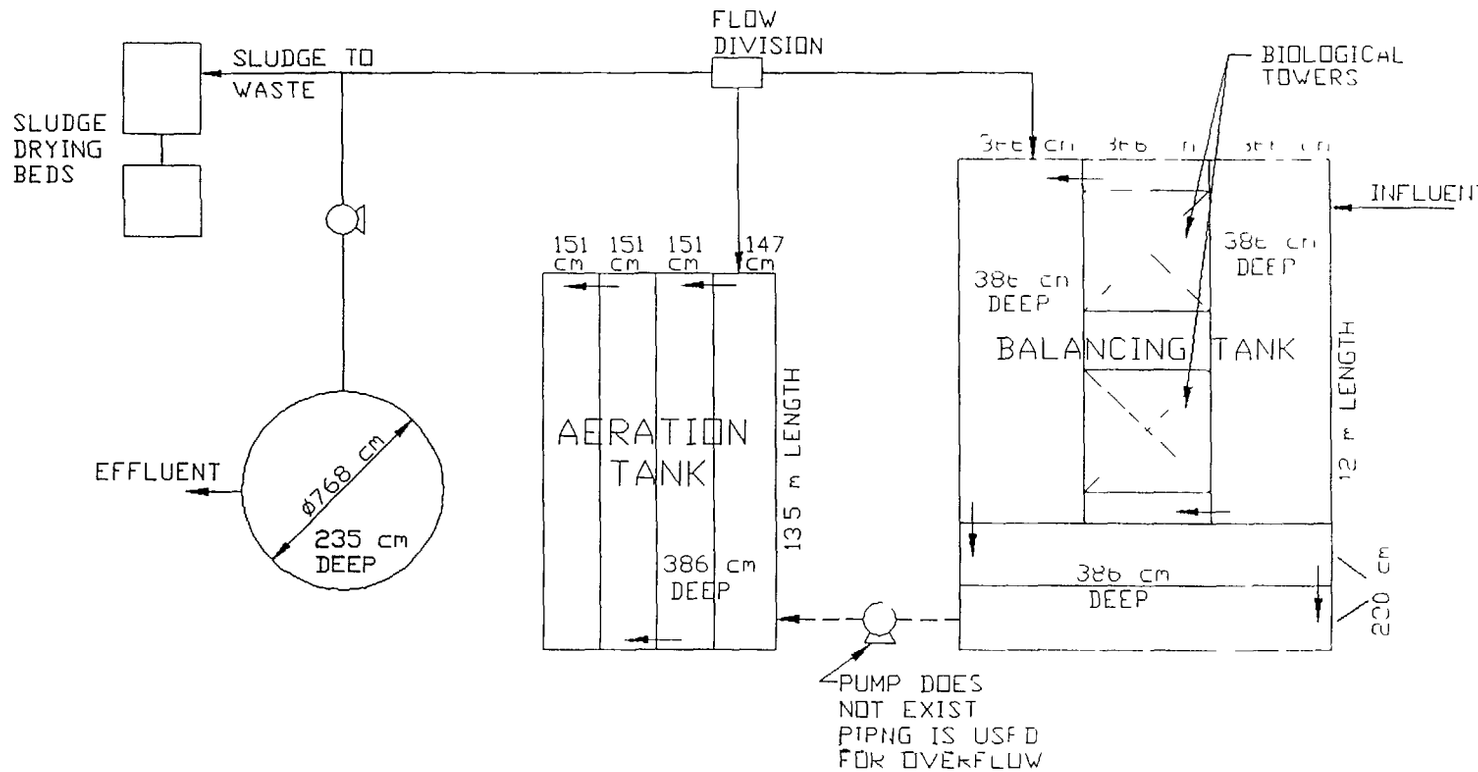

Figure 6

EXISTING WASTEWATER TREATMENT FACILITY

FEASIBILITY STUDY FOR YEAST INDUSTRIES CO LTD

Rusaifa, Jordan

HARZA Consulting Engineers and Scientists

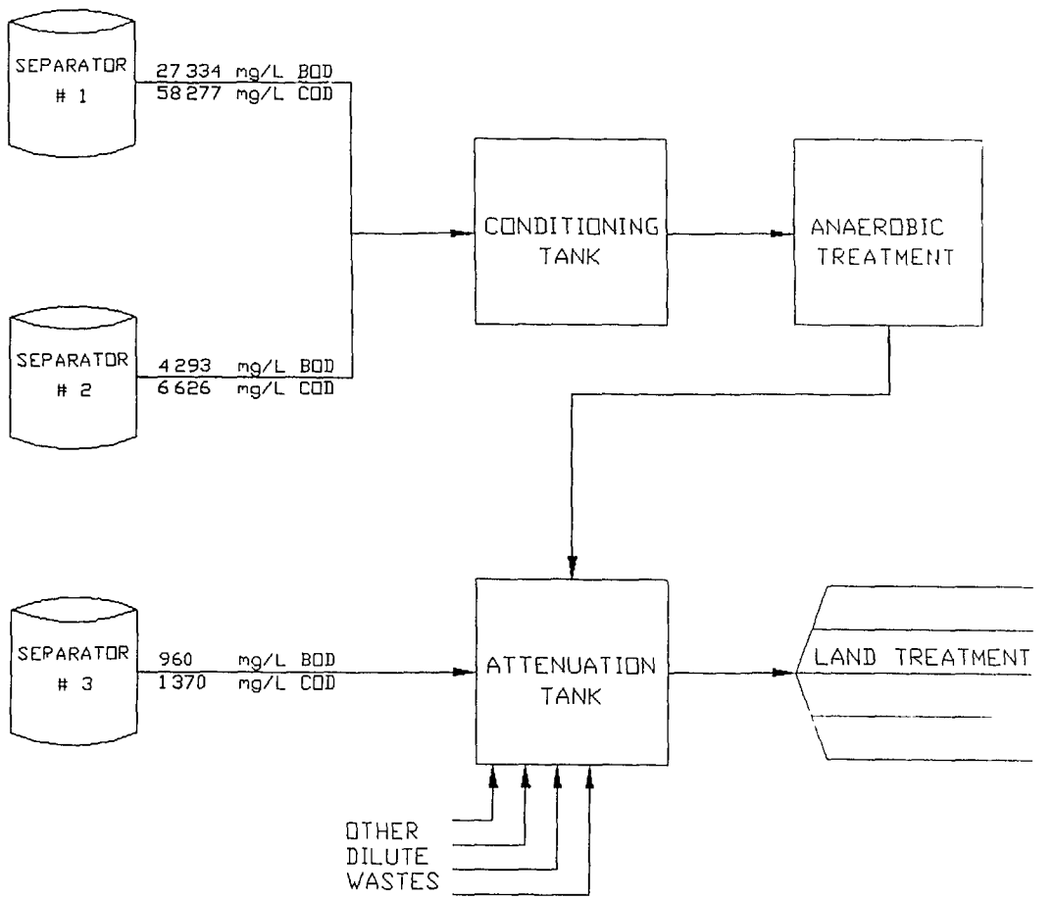

Figure 7

CONCEPTUAL LAYOUT FOR PRETREATMENT FOR CONCENTRATED WASTES ONLY

FEASIBILITY STUDY FOR YEAST INDUSTRIES CO LTD
Rusefa Jordan

HARZA Consulting Engineers and Scientists

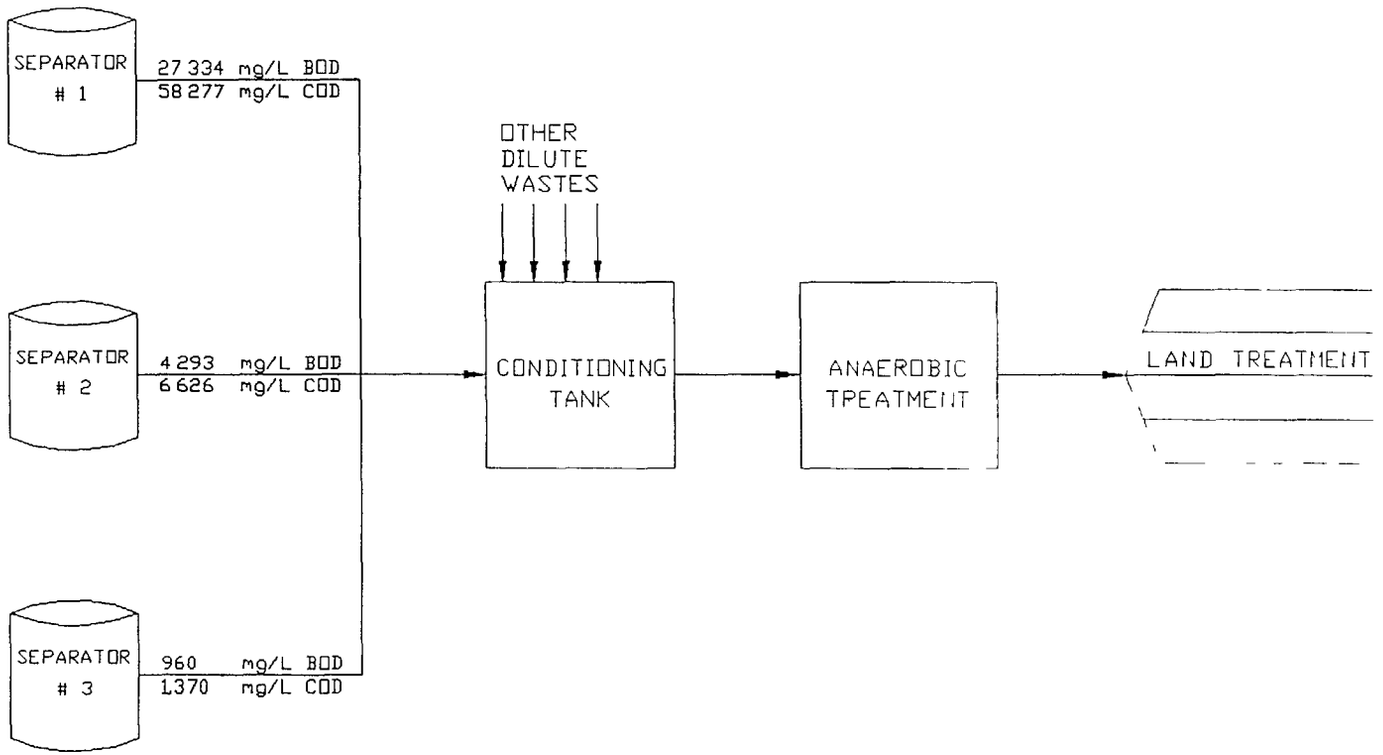

Figure 8

CONCEPTUAL LAYOUT FOR PRETREATMENT FOR TOTAL WASTEWATER FLOW

FEASIBILITY STUDY FOR YEAST INDUSTRIES CO LTD
Rusella, Jordan

HARZA Consulting Engineers and Scientists

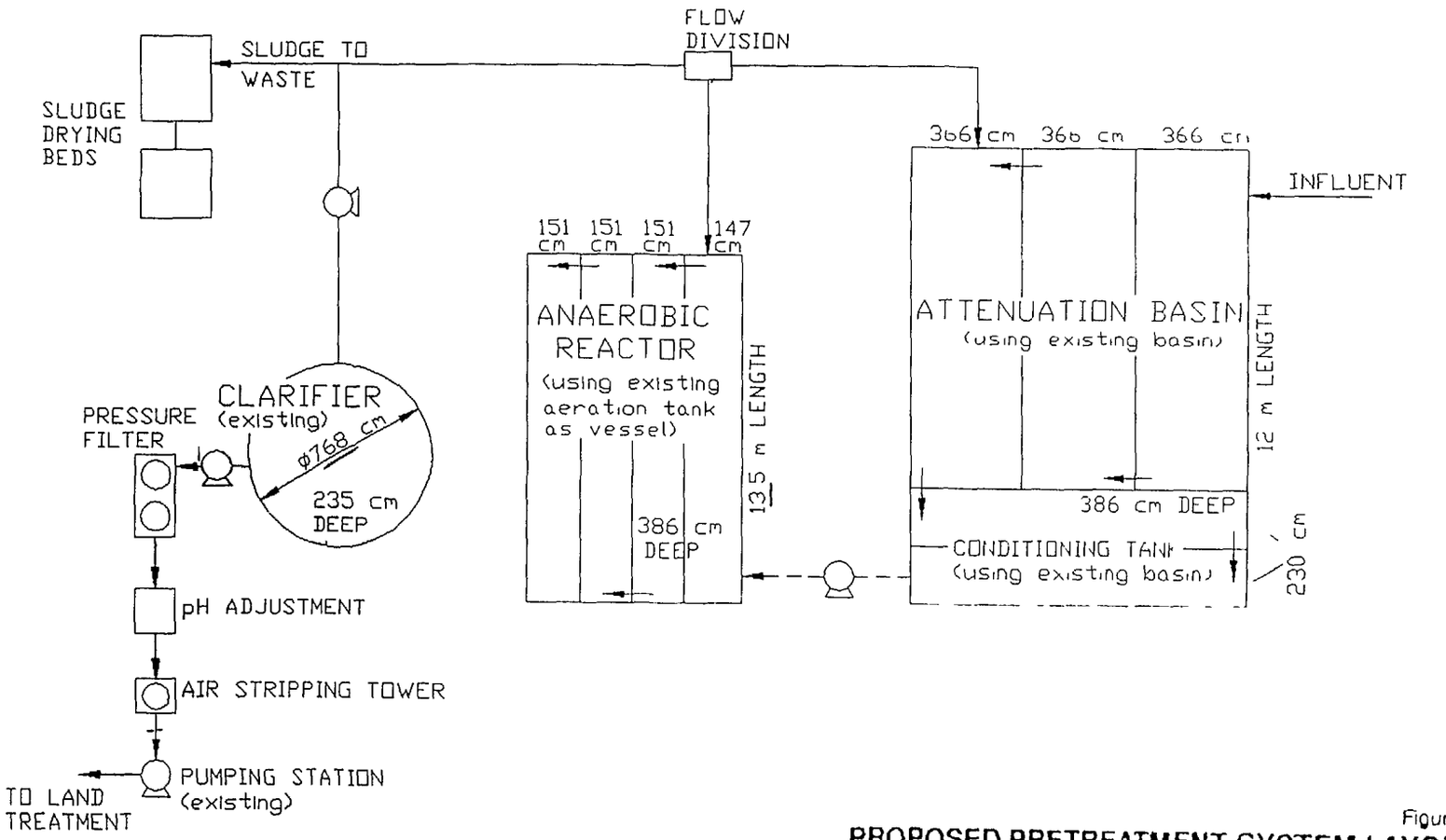

Figure 9

PROPOSED PRETREATMENT SYSTEM LAYOUT

FEASIBILITY STUDY FOR YEAST INDUSTRIES CO LTD

Russeifa, Jordan

HARZA Consulting Engineers and Scientists

19

APPENDIX A

Screening of Alternatives for Yeast Industries Company, LTD

The recommendations provided in the Audit Report for Yeast Industries Company LTD (YIC) (USAID Report No 3114-95-2b-30 April 1995) were screened to determine the most promising alternative for further investigation in a detailed feasibility study The recommendations of the audit report and the screening rationale applied to each is provided below

Recommendation 1

Install devices to monitor discharges from all processes and cleaning operations including equipment and floor cleaning in order to generate and maintain an accurate daily measurement and balance of facility water use

YIC currently monitors some of the process discharges, although staff has mentioned problems associated with corrosion of flow meters Further monitoring is technically feasible, however, consultation with vendors should be made prior to specifying equipment to ensure it can resist the corrosive environment it will be exposed to

Recommendation 2

Design and implement a wastewater sampling and monitoring program and a fermentor exhaust sampling and monitoring program

Fermentor exhaust monitoring is presently being implemented by YIC Wastewater sampling is also being considered

Recommendation 3

Optimize modify and upgrade the molasses preparation and fermentation systems through automation and process monitoring and incremental-feed system implementation

An incremental feed system is currently being used Optimizing the systems and upgrading to automation through monitoring are technically feasible and should be pursued in future YIC plans

Recommendation 4

Optimize tank cleaning systems by minimizing the washing frequency and using the last rinse water for the initial rinse of the next cleaning sequence

Minimizing tank wash frequency is technically feasible and should be pursued in future YIC plans

Recommendation 5

Recycle and reuse Separator 2 and 3 filtrate and implement counter-current yeast washing system

YIC believes that the use of counter-current rinsing may increase the BOD concentration of wastewater effluent from 6 000 mg/l to approximately 10 000 mg/l Since both of these measures will raise the effluent BOD concentrations, which potentially may draw fines from the Water Authority of Jordan the first step must be to upgrade the final treatment of the effluent

Recommendation 6

Establish and implement rigorous equipment cleaning and floor cleaning procedures to conserve water

This item is technically feasible and should be pursued in future YIC plans

Recommendation 7

Optimize cleaning methods by carefully studying current procedures washing time solution concentration, water temperature, intensity of application etc Applying an appropriate combination of these elements to each type of tank can reduce water use Establish protocols and procedures

This item is technically feasible and should be pursued in future YIC plans

Recommendation 8

Optimize the IX regeneration process and explore the use of new technologies and resins

Optimization of IX is technically feasible, possibly through the use of a Ecotech type system Further discussion of this type of technology is provided in the feasibility study report for the Universal Modern Industries (Vegetable Oil Refinery)

Recommendation 9

Improve housekeeping and implement a spill prevention, control and countermeasures program Use dry vacuum techniques instead of washing spills into the drain

This item is technically feasible and should be pursued in future YIC plans

Recommendation 10

Segregate Separator #1 effluent from dilute wastes Use existing wastewater tanks to store them

separately Use a portion of the dilute wastewater to clean and flush the wastewater equipment and convevance piping system rather than using fresh water

This measure is technically feasible, however, it may not be required, or only required to a lesser extent once the proposed wastewater treatment system upgrade is implemented The need should be determined once the wastewater treatment system is in place

Recommendation 11

Explore installing an air cooling system to replace the existing wet evaporative cooling system

As expressed through comments from YIC this measure is impractical due to the high ambient temperature in Jordan, which limit the efficiency of air cooling technologies It is possible to use a combined air cooling and wet cooling system but it is costly to adapt air cooling to an existing wet system This recommendation is therefore not considered feasible

Recommendation 12

Recommendations made in the WEC report

> *"The outdoor above-ground diesel storage tank and acid tanks should have a containment dike built around it such that this dike could contain the volume of the tank in case of tank failure or rupture It is also a safe operating practice*
>
> *The underground storage tank of diesel fuel should have a management program whereby on a weekly basis the plant logs usage, receipt of fuel, and tank inventory by level By keeping this type of log, the plant should be able to balance fuel use from the tank and detect a leak, if it occurs at an early stage*

Both of these measures are feasible and should be pursued in future YIC plans

Recommendation 13

Establishing an Environmental Department with dedicated personnel and sufficient resources writing an environmental policy complete with missions, visions, goals, policies and a future work plan, and developing training and incentive programs for all YIC personnel

YIC has already assigned an environmental manager to pursue these objectives

Recommendation 14

Consider the following PP/WM and water conservation items for feasibility levels studies

- *Process modifications and upgrading through automation*

- *Optimization of tank cleaning system*
- *Implementation of air cooling system*

The first two recommendations are feasible and should be pursued by YIC in future plans The third recommendation is discarded from further considerations, as discussed under Recommendation 11

Although the above items will if implemented reduce the organic pollution and wastewater volume by 15 to 20 percent, we strongly feel that YIC should undertake thorough feasibility level efforts to determine a cost effective treatment for processing the final wastewater Some of the options we recommend for the YIC's consideration are as follows

- Total wastewater attenuation, filtration and land application
- Total wastewater coagulation dissolved air flotation filtration and land application
- Total wastewater coagulation clarification, anaerobic biodegradation treatment followed by land application
- Segregation of concentrated and dilute waste treatment of concentrated waste by coagulation, and dissolved air flotation, mixing with dilute wastewater filtration and land application of combined wastes
- Segregation of concentrated waste and treatment by coagulation, clarification anaerobic biodegradation mixing treated waste with dilute waste, filtration and land application of combined wastes

In all above options, the following will apply

- Land treatment should be thoroughly pilot studied, designed, constructed operated and monitored throughout the life cycle
- Sludges produced should be dried using sludge drying beds and dried sludge either marketed or disposed
- Existing wastewater treatment equipment should be used to the fullest extent
- An on-site anaerobic biotreatment, if operated, will generate relatively minimum sludge It will produce methane gas which can be flared or used as a fuel for the boiler if feasible

This item is chosen as the primary focus for the detailed feasibility study Improved wastewater treatment will reduce the amount of contaminants discharged, which ultimately negatively impacts water quality The land treatment system can be improved to serve as an effective component of wastewater treatment as well as a source of groundwater recharge and irrigation

APPENDIX B

Translated extracts from Jordan University (Center of Research and Water Studies) Study on using wastewater discharged from Yeast Industries in Irrigation of forestry trees at Russeifa

The Soil and Geology of the area:

The exposed formations in the area are mainly Amman formation which belongs to the Upper Cretaceous and consists of chart and limestone alternation and phosphatic rocks. The trend of fractures in these formations are in the direction of NW-SE and E-W

These formations are overlain by different thickness of soils ranges from few centimeters(cm) to 100 cm. After studying a cross section of these soils in the area through a 120 cm deep ditch the following is observed

1- Layer (A) It is a thin layer which does not exceed 6 cm in thickness, the amount of clay in this layer ranges between 15-20% and contains organic matter and plant roots of about 0 1% This layer has a prismatic structure and contains more than 70% silt In general,the color of this layer is dark brown.

2- Layer (B) It is a thick layer of soil about 50 cm in thickness and contains 10-15% of clay and about 75% of silt in addition to calcarite in the lower section, also it has a prismatic structure and considered permeable This layer has a yellow color

3- Layer (C) About 60 cm in thickness, mainly consists of calcium carbonate (Caliche) which contains about 15% of silt and has a yellow color

4- Recolite layer (Regolith), this layer comes in between the solid rocks which covers a large area and the top soil.

Metals at the soil profile.
unclay Metals
1- Quartz
2- Calcite
3- Apatite
4- small quantities og Gypsum

Clay metals
1- Smectite
2- Illite
3- Kaolinite.

APPENDIX C

Appendix C
(DATA FROM MWI)

Average monthly rainfall data are provided
Also daily rainfall data at two stations
A10016 Russeifa
A10019 Marka Airport
A10016 is more representative

Evaporation Data are only provided for station A10019 which is nearest station to the facility where evaporation is measured data was not checked for years after yet but it will be soon so it could be provided at the moment

In case of further data needed please fax us

MINISTR F WATER AND IRRI ATI N
WATER DAT- BANK
M NTHL RAINFALL T TALS & EVAP ES IN mm

SITE IDENTIFICATI N N AL -1o NIER NAME RUSEIFA LATITUDE 32 1 L NGITUDE 3 -
G VERNERATE Z ALTITUDE M) o55 PALESTINE GRID N RTH 158 E-ST 248

WATER EAR	CT	N V	DEC	JAN	FEB	MARCH	APRIL	MAY	JUNE	JUL	AU	SEP
85 / 8o		1 2	21 o	11 7	28 7	3	1 o	3 o				
8o / 87	1o 4	4o o	13 8	18 4	13	2 2						
87 88	48 o	2 7	o3 2	3 1	7o 7	35 7	o					
88 / 8o	5 8	8 8	88	27 4	14 8	1o 4						
89 / o-	-	12 o	16 1	17	24 o	37 5	17 o					
o- / o1	3 7	5 7	1 5	o8 2	24	22 7	17 o					
91 / 92	-	18 5	oo 2	51 2	1 7 o	12 o		2				
o2 / o3	- 7	24 5	34 8	31 o	27	1 5		4 5				
T TALS	7- 8	123 o	338 5	255 o	317 2	14o o	4 8	1 1				
AVERAGES	8 o	15 5	42 3	32	3o 7	18 7	o o	1 3				

NUMBER OF WATER YEARS = 8 SUMB LS MEANS N REC RD ** ME-NS INC MPLETE RE RD

MINISTR F [illegible]-TER -ND IRRI-TI N
WATER D-T- B-NK
M NTHLY R-INF-LL T TALS & - ER-GES

SITE IDENTIFICATI N N AL[illegible]19 NER N-NE RUSEIF- I-TITUDE 31 8 L NGITUDE 3[illegible]
G VERNERATE A ALTITUDE (M) 7[illegible] D-LESTINE RII N RTH 1 3 6 E T 243 [illegible]

WATER YEAR	OCT	NOV	DEC	JAN	FEB	MARCH	APRIL	MAY	JUNE	JULY	AUG	SEP
85 / 86	[illegible]	5 1	27 3	[illegible]	62 6	[illegible] 2		[illegible] 8				
86 / 87	38 8	102 3	20 9	46 4	16 4	36 4						
87 / 88	33 2	4 [illegible]	69 2	5 1	126 3	63 4	13 1					
88 / 89	8	14 6	123 6	43 7	22	31 8				[illegible]	[illegible]	
89 / 90	[illegible]		13 0		[illegible] 2	[illegible] 6	21 [illegible]					
90 / 91	1 8	3 7	2 5	6 6	47 2	43	[illegible] 2	[illegible] 1				
91 / 92	4 7	35	166 4	112 1	[illegible]	1 7		[illegible]				
92 / 93	[illegible]	30 6	71 5	67 5	46 5	17 1		11 6				
T TALS	86 5	2 4 3	495 3	41 7	570 2	283	4 5	27 5				
AVERAGES	1 8	25 5	61 9	51 3	72 4	35 4	[illegible] 1	3 1				

NUMBER F WATER YEARS = 8 SUITABLS MEANS N RECORD ** MEANS IN COMPLETE RECORD

STA_IDN	DATE	RCODE	MCODE	READING(mm)
AL0019	01-Feb-90	05	00004	0 1
AL0019	02-Feb-90	05	00004	0 3
AL0019	03 Feb-90	05	00004	1 8
AL0019	04-Feb-90	05	00004	0 1
AL0019	05-Feb-90	05	00004	1 9
AL0019	06-Feb-90	05	00004	2
AL0019	07-Feb-90	05	00004	1
AL0019	08-Feb-90	05	00004	0 5
AL0019	09-Feb-90	05	00004	1 9
AL0019	10-Feb-90	05	00004	3 7
AL0019	14-Feb-90	05	00004	30 1
AL0019	15-Feb-90	05	00004	0 4
AL0019	17-Feb-90	05	00004	0 2
AL0019	18-Feb-90	05	00004	11
AL0019	19-Feb 90	05	00004	0 2
AL0019	01-Mar-90	05	00004	16
AL0019	05-Mar-90	05	00004	0 3
AL0019	06-Mar-90	05	00004	0 7
AL0019	10-Mar-90	05	00004	2
AL0019	11-Mar 90	05	00004	2 4
AL0019	12-Mar-90	05	00004	37 2
AL0019	13-Mar-90	05	00004	2 8
AL0019	24 Mar-90	05	00004	1 5
AL0019	31-Mar-90	05	00004	3
AL0019	01-Apr-90	05	00004	18 2
AL0019	02-Apr-90	05	00004	3
AL0019	18-Oct-90	05	00004	0 3
AL0019	21-Oct-90	05	00004	0 2
AL0019	28-Oct-90	05	00004	1 3
AL0019	09-Nov-90	05	00004	2 7
AL0019	10-Nov-90	05	00004	1
AL0019	25-Dec-90	05	00004	2 5
AL0019	01-Jan-91	05	00004	4 4
AL0019	03-Jan-91	05	00004	3 8
AL0019	04-Jan-91	05	00004	0 8

AL0019	03 Nov-91	05	00004	5 4
AL0019	29 Nov 91	05	00004	9 3
AL0019	30 Nov-91	05	00004	20 3
AL0019	01 Dec 91	05	00004	1 9
AL0019	02 Dec-91	05	00004	21 8
AL0019	03 Dec 91	05	00004	45 2
AL0019	04 Dec 91	05	00004	4 1
AL0019	11-Dec 91	05	00004	9 2
AL0019	12 Dec-91	05	00004	14 2
AL0019	13 Dec 91	05	00004	4 2
AL0019	18 Dec 91	05	00004	0 7
AL0019	24 Dec 91	05	00004	0 8
AL0019	25 Dec 91	05	00004	0 1
AL0019	27 Dec 91	05	00004	23 6
AL0019	30 Dec 91	05	00004	5 6
AL0019	31 Dec 91	05	00004	35
AL0019	01-Jan 92	05	00004	50 3
AL0019	02 Jan 92	05	00004	20
AL0019	13 Jan 92	05	00004	0 5
AL0019	14-Jan-92	05	00004	1 9
AL0019	15 Jan 92	05	00004	1 4
AL0019	16 Jan 92	05	00004	3
AL0019	17 Jan 92	05	00004	2 1
AL0019	18 Jan 92	05	00004	0 4
AL0019	19 Jan 92	05	00004	0 1
AL0019	20 Jan-92	05	00004	5 8
AL0019	21 Jan 92	05	00004	0 6
AL0019	22 Jan 92	05	00004	0 5
AL0019	29 Jan-92	05	00004	3
AL0019	30 Jan-92	05	00004	6 7
AL0019	31 Jan 92	05	00004	15 8
AL0019	01 Feb 92	05	00004	8 2
AL0019	02 Feb 92	05	00004	4 8
AL0019	03 Feb 92	05	00004	38 2
AL0019	04-Feb 92	05	00004	38 9
AL0019	06 Feb 92	05	00004	18 5

74

AL0019	07-Feb-92	05	00004	2 8
AL0019	08-Feb-92	05	00004	4 4
AL0019	09-Feb-92	05	00004	27
AL0019	10-Feb 92	05	00004	3 4
AL0019	11-Feb-92	05	00004	0 2
AL0019	13-Feb-92	05	00004	0 3
AL0019	15-Feb-92	05	00004	0 2
AL0019	16-Feb-92	05	00004	1 2
AL0019	19-Feb 92	05	00004	1 9
AL0019	20 Feb 92	05	00004	0 7
AL0019	22-Feb-92	05	00004	0 7
AL0019	23-Feb 92	05	00004	7 2
AL0019	24-Feb-92	05	00004	21 4
AL0019	25-Feb-92	05	00004	15 4
AL0019	26-Feb-92	05	00004	2 2
AL0019	27-Feb 92	05	00004	2
AL0019	29-Feb 92	05	00004	0 4
AL0019	21-Mar-92	05	00004	2 8
AL0019	22-Mar-92	05	00004	12 9
AL0019	07-May-92	05	00004	0 5
AL0019	08-May-92	05	00004	2 7
AL0019	15-May-92	05	00004	0 2
AL0019	17-May-92	05	00004	0 6
AL0019	21-May 92	05	00004	2
AL0019	20-Nov-92	05	00004	0 9
AL0019	21-Nov 92	05	00004	8
AL0019	22-Nov-92	05	00004	2 2
AL0019	23-Nov-92	05	00004	20 8
AL0019	24-Nov-92	05	00004	7 7
AL0019	01-Dec 92	05	00004	2
AL0019	02-Dec 92	05	00004	8
AL0019	03-Dec-92	05	00004	0 4
AL0019	04-Dec-92	05	00004	0 2
AL0019	07-Dec-92	05	00004	3 1
AL0019	08-Dec-92	05	00004	0 1
AL0019	12-Dec 92	05	00004	1 5

52

AL0019	14 Dec-92	05	00004	0 7
AL0019	15 Dec-92	05	00004	15 3
AL0019	16 Dec-92	05	00004	18 4
AL0019	17 Dec-92	05	00004	1 4
AL0019	22-Dec-92	05	00004	0 6
AL0019	23 Dec-92	05	00004	16 9
AL0019	24 Dec 92	05	00004	1 4
AL0019	25 Dec 92	05	00004	0 2
AL0019	26-Dec 92	05	00004	1 3
AL0019	07-Jan 93	05	00004	2 7
AL0019	08 Jan-93	05	00004	7 6
AL0019	09 Jan-93	05	00004	12 3
AL0019	10-Jan-93	05	00004	29 6
AL0019	11-Jan-93	05	00004	0 4
AL0019	12-Jan-93	05	00004	0 2
AL0019	31-Jan-93	05	00004	14 7
AL0019	01-Feb-93	05	00004	17 9
AL0019	02-Feb-93	05	00004	4
AL0019	03 Feb 93	05	00004	5 8
AL0019	04-Feb 93	05	00004	5
AL0019	08 Feb 93	05	00004	5 3
AL0019	09-Feb 93	05	00004	4 5
AL0019	10 Feb 93	05	00004	1 5
AL0019	11-Feb 93	05	00004	1 8
AL0019	12-Feb-93	05	00004	0 2
AL0019	13-Feb-93	05	00004	3 5
AL0019	05 Mar-93	05	00004	0 6
AL0019	06-Mar-93	05	00004	6 4
AL0019	11-Mar-93	05	00004	10 1
AL0019	04-May-93	05	00004	0 5
AL0019	05-May-93	05	00004	7 5
AL0019	09-May-93	05	00004	2 5
AL0019	19-May-93	05	00004	0 4
AL0019	30-May-93	05	00004	0 7
AL0019	01-Nov-93	05	00004	4 7
AL0019	02-Nov-93	05	00004	0 6

76

AL0019	10 Nov 93	05	00004	5 8
AL0019	11 Nov-93	05	00004	9 4
AL0019	12 Nov 93	05	00004	0 5
AL0019	14 Nov 93	05	00004	0 5
AL0019	15 Nov-93	05	00004	0 6
AL0019	13 Dec-93	05	00004	8 7
AL0019	14-Dec-93	05	00004	0 7
AL0019	20-Dec 93	05	00004	0 4
AL0019	21-Dec 93	05	00004	4 2
AL0019	22 Dec-93	05	00004	2 5
AL0019	23 Dec-93	05	00004	0 3
AL0019	01-Jan-94	05	00004	4 9
AL0019	03-Jan-94	05	00004	0 2
AL0019	04-Jan-94	05	00004	20 1
AL0019	10-Jan 94	05	00004	0 4
AL0019	14-Jan 94	05	00004	0 3
AL0019	16-Jan 94	05	00004	3 4
AL0019	22-Jan-94	05	00004	13 6
AL0019	23-Jan-94	05	00004	3
AL0019	24 Jan-94	05	00004	3 3
AL0019	25 Jan 94	05	00004	0 8
AL0019	26-Jan-94	05	00004	0 8
AL0019	28 Jan 94	05	00004	0 6
AL0019	30-Jan 94	05	00004	1
AL0019	31-Jan-94	05	00004	21 9
AL0019	01-Feb-94	05	00004	3 6
AL0019	02 Feb 94	05	00004	0 7
AL0019	22 Feb-94	05	00004	6 4
AL0019	23-Feb-94	05	00004	3 1
AL0019	24-Feb 94	05	00004	0 4
AL0019	26-Feb-94	05	00004	1 5
AL0019	27 Feb-94	05	00004	1 9
AL0019	06-Mar-94	05	00004	1 6
AL0019	07-Mar-94	05	00004	1 2
AL0019	11 Mar 94	05	00004	3 4
AL0019	11-Mar-94	05	00004	2 6

AL0019	12 Mar 94	05	00004	13 9
AL0019	13 Mar 94	05	00004	7 9
AL0019	14 Mar 94	05	00004	0 3
AL0019	25 Mar 94	05	00004	0 7
AL0019	01 Apr 94	05	00004	0 7

STA_IDN	DATE	RCODE	MCODE	READING (mm)
AL0016	01-Jan-90	05	00004	0 8
AL0016	03 Jan-90	05	00004	10 6
AL0016	04 Jan 90	05	00004	1 8
AL0016	16-Jan-90	05	00004	3 8
AL0016	02-Feb 90	05	00004	1 4
AL0016	10 Feb-90	05	00004	3
AL0016	14-Feb 90	05	00004	17 5
AL0016	18-Feb-90	05	00004	2 7
AL0016	01-Mar-90	05	00004	13 7
AL0016	10 Mar 90	05	00004	1 2
AL0016	11 Mar-90	05	00004	0 5
AL0016	12-Mar-90	05	00004	19
AL0016	13-Mar 90	05	00004	1 6
AL0016	24-Mar-90	05	00004	1 5
AL0016	01 Apr 90	05	00004	5 2
AL0016	02 Apr 90	05	00004	12 4
AL0016	10 Nov-90	05	00004	4 2
AL0016	11-Nov-90	05	00004	1 5
AL0016	26 Dec-90	05	00004	1 5
AL0016	04 Jan-91	05	00004	3
AL0016	12-Jan-91	05	00004	10
AL0016	13-Jan-91	05	00004	1
AL0016	22 Jan-91	05	00004	2
AL0016	23-Jan-91	05	00004	8 8
AL0016	25 Jan-91	05	00004	18 8
AL0016	26-Jan 91	05	00004	0 9
AL0016	30 Jan-91	05	00004	12 5
AL0016	31-Jan-91	05	00004	11 2
AL0016	03 Feb 91	05	00004	1 2
AL0016	16-Feb-91	05	00004	10 5
AL0016	26-Feb-91	05	00004	10
AL0016	27-Feb-91	05	00004	2 8
AL0016	05 Mar 91	05	00004	0 7
AL0016	12-Mar 91	05	00004	2
AL0016	22-Mar-91	05	00004	14 7

79

AL0016	23-Mar 91	05	00004	3 8
AL0016	24 Mar-91	05	00004	1 5
AL0016	01 Apr-91	05	00004	5 2
AL0016	02 Apr-91	05	00004	12 4
AL0016	04 Nov 91	05	00004	2
AL0016	29 Nov 91	05	00004	4 2
AL0016	30 Nov-91	05	00004	12 3
AL0016	01-Dec 91	05	00004	2 5
AL0016	02-Dec 91	05	00004	10 5
AL0016	03 Dec 91	05	00004	31 6
AL0016	04-Dec 91	05	00004	3 3
AL0016	11 Dec-91	05	00004	7 5
AL0016	12-Dec 91	05	00004	7 7
AL0016	26-Dec-91	05	00004	14 6
AL0016	31-Dec-91	05	00004	21 5
AL0016	01 Jan-92	05	00004	33
AL0016	14-Jan-92	05	00004	2
AL0016	16 Jan-92	05	00004	4 5
AL0016	19 Jan-92	05	00004	2 6
AL0016	31-Jan-92	05	00004	9 1
AL0016	01-Feb 92	05	00004	10
AL0016	02 Feb-92	05	00004	4 6
AL0016	04 Feb-92	05	00004	20 3
AL0016	07-Feb 92	05	00004	12 1
AL0016	08-Feb 92	05	00004	3 6
AL0016	10 Feb-92	05	00004	22 2
AL0016	23 Feb-92	05	00004	8
AL0016	26-Feb 92	05	00004	27 2
AL0016	04 Mar 92	05	00004	1 3
AL0016	21 Mar-92	05	00004	2 1
AL0016	22-Mar-92	05	00004	9 2
AL0016	08 May-92	05	00004	2
AL0016	20-Nov 92	05	00004	1
AL0016	21 Nov-92	05	00004	4 3
AL0016	22-Nov 92	05	00004	15
AL0016	23 Nov-92	05	00004	4 2

AL0016	25 Jan 94	05	00004	1 1
AL0016	26 Jan 94	05	00004	0 2
AL0016	28 Jan 94	05	00004	0 5
AL0016	30 Jan-94	05	00004	12 2
AL0016	02 Feb 94	05	00004	0 8
AL0016	03 Feb 94	05	00004	0 5
AL0016	12 Feb 94	05	00004	0 4
AL0016	23 Feb 94	05	00004	3 5
AL0016	26 Feb 94	05	00004	1 4
AL0016	07 Mar-94	05	00004	12
AL0016	12 Mar 94	05	00005	0
AL0016	13 Mar 94	05	00005	0
AL0016	14 Mar-94	05	00005	12
AL0016	15 Mar 94	05	00005	0
AL0016	25 Mar-94	05	00004	3

18

AL19EVAP

Avg = 6.16 mm/day

STA_IDN	DATE	MAXT	MINT	WETB	DRYB	WD	WV	WR	PD	PE	SUN	Coeff	Evapotranspiartion	
AL0019	01-Jan-90	12 6	7 4	7 5	8 2	N	14 8	130	3 6	3	1000	0 65	1 95	
AL0019	02-Jan-90	16 5	6 2	7 1	7 6	N	1000	211	8	6	1000	0 65	3 9	
AL0019	03-Jan-90	13 7	8 4	8 2	9 6	S	18 5	383	2 4	1 6	1000	0 65	1 04	
AL0019	04-Jan-90	10 5	7 7	8	8 4	SW	18 5	225	1 8	0 8	1000	0 65	0 52	
AL0019	05-Jan-90	10	7	7 8	8	SW	22 2	582	1 8	1	1000	0 65	0 65	
AL0019	06-Jan-90	11 4	4 8	5 3	5 6	N	1000	77	2 3	2	1000	0 65	1 3	
AL0019	07-Jan-90	11 9	3 4	3 5	4	N	1000	112	2	1 2	1000	0 65	0 78	
AL0019	08-Jan-90	9 4	-1 3	1 5	2 8	N	1000	188	3 9	2 5	1000	0 65	1 625	
AL0019	09-Jan-90	9	4	4 5	5	N	1000	203	3 5	3	1000	0 65	1 95	
AL0019	10-Jan-90	8 1	999 9	1 5	2 2	N	1000	192	3 7	3	1000	0 65	1 95	
AL0019	11-Jan-90	8 4	-0 2	-0 7	1 4	N	1000	248	5 2	5	1000	0 65	3 25	
AL0019	12-Jan-90	9	-1	2 5	0 8	E	14 8	147	5 2	5	1000	0 65	3 25	
AL0019	13-Jan-90	10 2	0 4	-1 5	2 4	NE	11 1	150	3 8	3	1000	0 65	1 95	
AL0019	14-Jan-90	12 2	2 2	2 8	3	SW	1000	157	4 6	3 5	1000	0 65	2 275	
AL0019	15-Jan-90	10 6	5 5	5 8	6 8	S	9 3	263	3	1 6	1000	0 65	1 04	
AL0019	16-Jan-90	10	5 5	6 2	6 6	S	7 4	256	1 6	1	1000	0 65	0 65	
AL0019	17-Jan-90	10 4	6	7 2	7 4	SW	13	321	2 5	1 7	1000	0 65	1 105	
AL0019	18-Jan-90	11 5	6 6	7	7 3	SW	5 6	195	2	1	1000	0 65	0 65	
AL0019	19-Jan-90	13 4	2 4	2 5	2 8	SE	3 7	118	5 5	3 1	1000	0 65	2 015	
AL0019	20-Jan-90	12 8	5 4	3 2	5 5	N	1000	158	3 3	3	1000	0 65	1 95	
AL0019	21-Jan-90	9 7	5 8	7	7 8	S	9 3	477	2 6	1 5	1000	0 65	0 975	
AL0019	22-Jan-90	8 4	5	5 4	5 8	SW	14 8	475	2 9	2	1000	0 65	1 3	
AL0019	23-Jan-90	7 3	2 2	5 5	6 2	SW	16 7	232	2 5	1 8	1000	0 65	1 17	
AL0019	24-Jan-90	7 7	-0 9	-1 2	1 6	N	1000	190	4 9	3	1000	0 65	1 95	
AL0019	25-Jan-90	9 3	-0 8	-3	0 6	SE	33 4	313	8 8	5 9	1000	0 65	3 835	
AL0019	26-Jan-90	3 8	0 3	-0 1	0 3	E	18 5	187	1 6	1	1000	0 65	0 65	
AL0019	27-Jan-90	8 8	1 4	1 3	1 8	NE	9 3	118	1 4	0 8	1000	0 65	0 52	
AL0019	28-Jan-90	8 1	4 3	5 7	6	NW	18 5	226	2 1	1 4	1000	0 65	0 91	
AL0019	29-Jan-90	12 9	1	2 1	2 4	SW	3 7	165	4 4	3	1000	0 65	1 95	
AL0019	30-Jan-90	13 8	3 9	1 4	5 8	SE	13	224	6 6	4	1000	0 65	2 6	
~~AL0019~~	~~30-Jan-90~~	~~13 8~~	~~3.9~~	~~1 4~~	~~5 8~~	~~SE~~	~~13~~	~~224~~	~~6.6~~	~~4~~	~~1000~~	~~0.65~~	~~2 6~~	
AL0019	31-Jan-90	14 7	-0 6	1 7	0 2	N	1000	111	4 9	3 2	1000	0 65	2 08	54 34
AL0019	01-Feb-90	11 5	2 9	3 7	6 9	SW	7 4	202	2 8	1 2	1000	0 71	0 852	
AL0019	02-Feb-90	11 8	5 6	6 7	6 9	N	1000	197	2 9	1 5	1000	0 71	1 065	
AL0019	03-Feb-90	12	4	4 5	4 6	N	1000	109	2 1	2	1000	0 71	1 42	

57677

4

AL0019	04-Feb-90	13	3 1	4 2	5 1	N	1000	107	3 1	2 5	1000	0 71	1 775	
AL0019	05-Feb-90	11 5	3	3 1	3 2	N	1000	168	2 8	1 9	1000	0 71	1 349	
AL0019	06-Feb-90	10 4	4	5 5	6 2	S	29 6	382	4 4	3	1000	0 71	2 13	
AL0019	07-Feb-90	9 3	4	4 6	5 2	SW	18 5	216	3 6	2 8	1000	0 71	1 988	
AL0019	08-Feb-90	13 5	1 9	3 2	3 6	N	1000	129	5 8	4	1000	0 71	2 84	
AL0019	09-Feb-90	8 2	4 5	5 6	6	N	7 4	291	2	1	1000	0 71	0 71	
AL0019	10-Feb-90	9 5	4 6	4 7	5 5	W	22 2	365	3	2 5	1000	0 71	1 775	
AL0019	11-Feb-90	12 1	5 8	6 4	7	SW	22 2	215	4	3	1000	0 71	2 13	
AL0019	12-Feb-90	12 1	6	5	7 2	S	9 3	307	7 5	5 2	1000	0 71	3 692	
AL0019	13-Feb-90	13 5	5 5	5 3	7 7	S	7 4	192	8 3	5 9	1000	0 71	4 189	
AL0019	14-Feb-90	16 1	5	4 8	8 2	S	7 4	658	10	8	1000	0 71	5 68	
AL0019	15-Feb-90	9 2	4 2	5 9	6 2	W	22 2	341	3	2	1000	0 71	1 42	
AL0019	16-Feb-90	15	8 2	7 4	9	N	1000	270	5 8	3 2	1000	0 71	2 272	
AL0019	17-Feb-90	17 5	8 1	6 7	10 2	S	11 1	391	9 2	9	1000	0 71	6 39	
AL0019	18-Feb-90	11 4	4 8	9	9 4	SW	33 4	742	9 4	10	1000	0 71	7 1	
AL0019	19-Feb-90	6 4	3	3	4 2	NW	29 6	297	3 1	2 5	1000	0 71	1 775	
AL0019	20-Feb-90	8 7	0 6	1 5	2	N	1000	120	2	1 5	1000	0 71	1 065	
AL0019	21-Feb-90	10 4	1	1 9	3 4	N	1000	82	2 6	1 5	1000	0 71	1 065	
AL0019	22-Feb-90	6 8	1 9	1 9	3 3	NE	14 8	138	1 7	1	1000	0 71	0 71	
AL0019	23-Feb-90	11 4	1 5	3 3	3 9	N	7 4	195	3 4	2 5	1000	0 71	1 775	
AL0019	24-Feb-90	10 5	3 4	4	5 4	NE	3 7	252	3 6	2 2	1000	0 71	1 562	
AL0019	25-Feb-90	12 4	2 7	4 4	5 4	N	1000	145	4 2	2 8	1000	0 71	1 988	
AL0019	26-Feb-90	13 5	2 6	5 7	6 2	N	1000	170	3 8	3	1000	0 71	2 13	
AL0019	27-Feb-90	13 8	4 1	6	6 8	N	1000	211	5 4	3	1000	0 71	2 13	
AL0019	28-Feb-90	14 4	6	6 5	8	SW	14 8	366	11 2	8 5	1000	0 71	6 035	69.012
AL0019	01-Mar-90	12 6	7 3	6 4	12 4	W	11 1	693	4 3	3	1000	0 75	2 25	
AL0019	02-Mar-90	12 2	5 1	7	7 4	W	3 7	314	2 3	1 4	1000	0 75	1 05	
AL0019	03-Mar-90	18 3	4 6	7	8	N	1000	47	4	3	1000	0 75	2 25	
AL0019	04-Mar-90	21 6	6 8	7 5	10 3	N	1000	106	4 8	5	1000	0 75	3 75	
AL0019	05-Mar-90	14 4	6 6	8 3	8 8	W	11 1	241	3 2	2 7	1000	0 75	2 025	
AL0019	06-Mar-90	12	7 8	8 2	8 4	SW	7 4	233	2 8	2	1000	0 75	1 5	
AL0019	07-Mar-90	13	6 3	6 4	7 2	W	11 1	255	4 2	3	1000	0 75	2 25	
AL0019	08-Mar-90	13 6	4	7	7 6	NE	11 1	120	3	2	1000	0 75	1 5	
AL0019	09-Mar-90	19 3	4 9	5 3	9 4	E	13	207	9 1	9	1000	0 75	6 75	
AL0019	10-Mar-90	20 7	9 5	5 5	11 7	E	44 5	459	8 8	7	1000	0 75	5 25	
AL0019	11-Mar-90	12	9 2	8 3	9 8	S	20 4	242	3 9	2 4	1000	0 75	1 8	

AL0019	12 Mar 90	14 8	7	7 7	8	S	14 8	219	3	1 7	1000	0 75	1 275	
AL0019	13 Mar 90	8 4	5 5	6 4	6 8	W	18 5	389	1 2	0 6	1000	0 75	0 45	
AL0019	14 Mar 90	14 2	7	7 4	9 6	W	14 8	236	4 2	2 5	1000	0 75	1 875	
AL0019	15 Mar 90	17 8	4 3	6 6	7	N	1000	206	4 5	3 1	1000	0 75	2 325	
AL0019	16 Mar 90	18 4	8 8	6 4	10 8	E	24 1	280	9 8	6 8	1000	0 75	5 1	
AL0019	17 Mar 90	13 3	1 5	-1 4	4	S	22 2	177	9	6 6	1000	0 75	4 95	
AL0019	18 Mar 90	16 2	2 7	999 9	5 6	S	18 5	118	8 2	6	1000	0 75	4 5	
AL0019	19 Mar 90	18	2 4	-1 4	9 6	S	11 1	75	8 1	7	1000	0 75	5 25	
AL0019	20 Mar 90	19 9	5 4	5 5	10 6	N	1000	235	13 9	13	1000	0 75	9 75	
AL0019	21 Mar 90	17	5 3	1	8 4	E	14 8	128	10 6	9	1000	0 75	6 75	
AL0019	22 Mar 90	19 8	5 7	1 5	8	N	1000	60	8 5	7	1000	0 75	5 25	
AL0019	23-Mar 90	16 4	9	7	12 4	N	1000	243	6 8	5	1000	0 75	3 75	
AL0019	24 Mar-90	15 5	6	8	10	SW	11 1	219	4 2	3	1000	0 75	2 25	
AL0019	25 Mar 90	16	6 5	8	9 8	NW	11 1	186	6	4	1000	0 75	3	
AL0019	26 Mar 90	18 1	6	7	11 6	N	1000	169	7 8	5 6	1000	0 75	4 2	
AL0019	27 Mar 90	20 2	5 9	6	10 8	N	1000	230	6	4 2	1000	0 75	3 15	
AL0019	28 Mar 90	21 5	7 8	7	12 7	N	1000	142	9 6	8	1000	0 75	6	
AL0019	29 Mar 90	22 2	7 9	8 7	13 8	SW	5 6	174	10 5	9	1000	0 75	6 75	
AL0019	30 Mar 90	20 5	8	6 8	14 9	N	1000	329	8 7	7 5	1000	0 75	5 625	
AL0019	31 Mar 90	15 5	7 7	7 4	10	W	27 8	227	6	5 5	1000	0 75	4 125	116.7
AL0019	01 Apr-90	8 3	5 2	6 7	7 1	N	1000	400	1 8	0 8	0 6	0 8	0 64	
AL0019	02 Apr 90	7 1	3 8	5	5	W	29 6	334	2	1	2 7	0 8	0 8	
AL0019	03 Apr 90	11	2 4	4 5	6 4	S	14 8	231	5 6	4	10 8	0 8	3 2	
AL0019	04 Apr 90	14 6	3	5	7	N	1000	113	3 7	2 5	9 6	0 8	2	
AL0019	05 Apr-90	16 8	4 5	7 8	9 8	N	1000	187	5 4	4	7 8	0 8	3 2	
AL0019	06 Apr 90	16 5	6 4	6	12 5	NW	14 8	206	7 5	6	11	0 8	4 8	
AL0019	07 Apr 90	18	6 5	9	12 4	N	1000	129	5	4	10 9	0 8	3 2	
AL0019	08 Apr 90	20 6	7 8	9	13	N	1000	153	9 6	8	7 8	0 8	6 4	
AL0019	09 Apr-90	19 1	13	10	16 4	SW	22 2	241	8 6	5	4 9	0 8	4	
AL0019	10 Apr 90	24	8 5	11	15 2	N	1000	199	7	6	9 2	0 8	4 8	
AL0019	11 Apr 90	28 7	15 5	12	18 8	S	11 1	145	9	7	4	0 8	5 6	
AL0019	12 Apr 90	21 2	15	12 5	19	W	18 5	153	11	9 9	1000	0 8	7 92	
AL0019	13-Apr 90	23	12 3	10 1	15 6	N	1000	121	8	7 5	4	0 8	6	
AL0019	14 Apr-90	22	9 9	8 6	15 9	N	1000	295	8 8	8 5	11 7	0 8	6 8	
AL0019	15 Apr 90	16 6	9	9	11 6	W	14 8	357	7	7	8	0 8	5 6	
AL0019	16 Apr 90	16	8 2	8 6	10 2	W	14 8	254	5 8	4 6	8	0 8	3 68	

154 9

21

84

AL0019	17-Apr-90	19	6 8	8 4	10 8	NW	5 6	199	8 6	9	11 2	0 8	7 2	
AL0019	18-Apr 90	24 6	9 5	8 8	16	N	1000	126	12	10 5	10 8	0 8	8 4	
AL0019	19-Apr-90	28 2	14 6	9	18	N	1000	235	14 5	13	8 3	0 8	10 4	
AL0019	20-Apr-90	25	15 7	12	19	N	1000	108	11	8 8	3	0 8	7 04	
AL0019	21-Apr-90	23 2	12 2	1	17	N	1000	228	10 8	9	11	0 8	7 2	
AL0019	22-Apr-90	25	6 5	9 3	17	N	1000	106	11	8 6	12 1	0 8	6 88	
AL0019	23-Apr-90	29 1	12 4	10	19	E	18 5	134	12 8	12	11 2	0 8	9 6	
AL0019	24-Apr-90	30 7	14 6	10	19 4	SE	7 4	90	12 8	11 9	7 5	0 8	9 52	
AL0019	25-Apr 90	30	15 4	10 6	21 4	N	1000	157	13 4	12	10	0 8	9 6	
AL0019	26-Apr-90	31 5	15 8	11	22 4	N	1000	121	15 9	14	11	0 8	11 2	
AL0019	27-Apr-90	31 2	17	13	24 7	W	5 3	197	18 1	16 3	7 7	0 8	13 04	
AL0019	28-Apr-90	23 8	11	12 1	22 2	NW	7 4	538	9 9	9	6 4	0 8	7 2	
AL0019	29 Apr-90	20 7	10 3	11 2	13 6	SW	9 3	173	8 2	7	11 2	0 8	5 6	
AL0019	30-Apr-90	23 3	8 8	8 1	14 3	N	1000	219	8 8	7 4	11	0 8	5 92	187 44
AL0019	01-May-90	18 8	8 4	10 5	13 6	NW	25 9	408	8 6	8	1000	0 71	5 68	
AL0019	02 May-90	18 7	7 8	10	10 6	NW	5 6	78	7 7	6 5	1000	0 71	4 615	
AL0019	03 May-90	22	6 1	8 7	11 1	NE	5 6	173	8 1	7	1000	0 71	4 97	
AL0019	04 May-90	20	8 4	8 5	12 7	NW	7 4	391	6 9	5 5	1000	0 71	3 905	
AL0019	05-May-90	19	6 9	9 5	12	W	22 2	210	7 5	7	1000	0 71	4 97	
AL0019	06-May-90	22 8	7	8	11 6	E	5 6	105	8 4	7	1000	0 71	4 97	
AL0019	07-May 90	25 3	9 8	9 4	15 3	N	1000	151	12 7	11 7	1000	0 71	8 307	
AL0019	08-May 90	27 4	12 6	10 4	20 4	SE	5 6	167	13 5	12 3	1000	0 71	8 733	
AL0019	09 May-90	27	15 2	13 9	17 9	N	1000	230	11 2	10	1000	0 71	7 1	
AL0019	10 May-90	22	15 6	12 2	18 6	W	9 3	251	9 3	8 8	1000	0 71	6 248	
AL0019	11-May-90	20	10 1	12	14 2	SW	18 5	381	8 5	8	1000	0 71	5 68	
AL0019	12 May-90	19 5	11 4	13 3	14 8	SW	14 8	310	7 5	7	1000	0 71	4 97	
AL0019	13 May 90	21 8	11 4	12 2	16	S	3 6	259	9 8	8	1000	0 71	5 68	
AL0019	14-May-90	28 8	12 6	10	18	N	1000	123	12 3	10	1000	0 71	7 1	
AL0019	15-May 90	33	16 4	12 5	21 7	E	5 6	390	20	17	1000	0 71	12 07	
AL0019	16-May-90	25 6	16 4	12 5	21 8	W	18 5	366	17 8	18	1000	0 71	12 78	
AL0019	17-May-90	25	13 5	12 6	19 6	SW	13	160	12 5	12	1000	0 71	8 52	
AL0019	18-May 90	27 3	13 2	13 1	20 8	N	1000	290	13	11	1000	0 71	7 81	
AL0019	19-May-90	31 2	15	12	24	N	1000	143	13 1	11	1000	0 71	7 81	
AL0019	20-May-90	30	16 7	13 4	24 2	N	1000	189	13 5	11	1000	0 71	7 81	
AL0019	21-May-90	26 4	14 8	14	19	SW	11 1	400	13 4	11	1000	0 71	7 81	
AL0019	22-May-90	27 5	12 5	12 1	20 4	NW	11 1	258	11	9 4	1000	0 71	6 674	

273 012

85

AL0019	28 Jun-90	33 2	19 6	16	27 6	N	1000	235	18 4	14	12 2	0 68	9 52	
AL0019	29 Jun 90	31 8	18 5	13 5	25 2	N	1000	265	15 3	11	12 1	0 68	7 48	
AL0019	30-Jun 90	29	17 8	14 4	23 6	W	18 5	371	17 6	15 5	12 3	0 68	10 54	270 844
AL0019	01-Jul 90	28	17 8	23 3	13 7	W	14 8	346	14 8	9	12 4	0 68	6 12	
AL0019	02-Jul-90	29	18 5	22 2	14 6	N	1000	266	14 4	9 2	12 1	0 68	6 256	
AL0019	03-Jul 90	29 2	18 9	23 4	13 6	SW	14 8	346	18 5	12	12 2	0 68	8 16	
AL0019	04-Jul 90	30 8	20 8	24	15 5	SW	9 3	346	16	10 6	11 8	0 68	7 208	
AL0019	05-Jul-90	30 5	20 8	24 3	16 9	W	14 8	439	21	14	11 8	0 68	9 52	
AL0019	06 Jul-90	31 9	21 6	26 4	16 1	SW	11 1	317	23 9	16 8	12 1	0 68	11 424	
AL0019	07 Jul 90	32 6	19 4	26 7	15 7	NW	5 6	274	19 7	12	12 2	0 68	8 16	
AL0019	08 Jul 90	33 8	20 8	27 8	15 3	NW	7 4	240	16 2	10 5	12	0 68	7 14	
AL0019	09 Jul-90	32 7	20 5	25 6	15	N	1000	275	14 5	9 8	12 3	0 68	6 664	
AL0019	10-Jul-90	32 3	20	25	16	NW	11 1	341	17 3	12 2	12 1	0 68	8 296	
AL0019	11 Jul-90	30 4	18 6	23	16 3	W	11 1	399	16	12	12 3	0 68	8 16	
AL0019	12-Jul-90	28 6	17	19 8	17	W	18 5	329	9 8	7	12 4	0 68	4 76	
AL0019	13 Jul 90	28	18 1	21	18 4	W	18 5	388	9	7 8	11 7	0 68	5 304	
AL0019	14-Jul-90	29 4	18 2	21	19	W	11 1	258	12 1	10	11 7	0 68	6 8	
AL0019	15-Jul-90	33	19 5	25 6	17 4	N	1000	275	17 4	12	12 5	0 68	8 16	
AL0019	16 Jul 90	32 4	21 4	26	17 5	S	5 6	279	17	12	12 3	0 68	8 16	
AL0019	17-Jul 90	32 5	20	24 8	14 4	NW	9 3	277	18	12 5	12 5	0 68	8 5	
AL0019	18-Jul-90	33 5	22	27	17 4	W	9 3	285	18	12	12 4	0 68	8 16	
AL0019	19-Jul 90	33 6	22 4	28 2	17 6	NW	14 8	341	17 3	11 5	12 5	0 68	7 82	
AL0019	20-Jul-90	32 5	22 4	26 8	15 2	NW	14 8	289	17 2	12	12 4	0 68	8 16	
AL0019	21-Jul-90	32	20	24 1	13 1	W	14 8	301	16 3	11	12 5	0 68	7 48	
AL0019	22-Jul 90	34 2	19 4	25	14 8	NW	11 1	229	16 4	10 5	12 3	0 68	7 14	
AL0019	23 Jul-90	31 4	18 4	22 7	17 6	N	1000	311	13 6	9	11 8	0 68	6 12	
AL0019	24-Jul 90	30 8	19 5	23 4	14 7	S	3 7	347	12 5	8 5	12	0 68	5 78	
AL0019	25 Jul 90	30 5	16 8	22 2	15 8	SW	7 4	280	11 3	9	12	0 68	6 12	
AL0019	26-Jul-90	32 1	17 7	24 1	16 8	N	1000	259	15 5	11	12 3	0 68	7 48	
AL0019	27-Jul-90	31 8	20 8	25 2	17	W	25 9	451	21 4	15	12 2	0 68	10 2	
AL0019	28-Jul-90	32	22 7	26 1	14 7	SW	9 3	386	16	11	12 2	0 68	7 48	
AL0019	29-Jul-90	29	19	22 6	18 5	SW	14 8	395	9 3	7	12	0 68	4 76	
AL0019	30-Jul 90	29 2	16 5	20 6	17	SW	11 1	336	7	5	12 2	0 68	3 4	
AL0019	31-Jul-90	30	17 9	23 3	17 9	W	9 3	300	12 4	8 5	12 2	0 68	5 78	224 672
AL0019	01-Aug-90	30 6	17	14 5	24 5	NW	18 5	298	13 2	10	12 3	0 6	6	
AL0019	02-Aug-90	32 4	18 4	16 6	24 5	NW	9 3	241	15	11	12 5	0 6	6 6	

764 811

Coefficient of Evapotransportation :

Evapotransporation as has been calculated as in Amman - Zarqa Basin water Resources Study Report prepared by Al. Saad et al, are as follows

Oct	0 53
Nov	0.54
Dec	0.6
Jan	0 65
Feb	0.71
March	0 85
April	0 8
May	0.71
June	0 68
July	0 68
August	0 6
Sep	0 54

Mean for wet months 0 68

Mean for dry months 0 62

Annual average 0 65

APPENDIX D

APPENDIX D (4 PAGES) 1 OF 4

4.3.2.1 Nutrient Uptake

Agricultural Crops

In general, the largest nutrient removals can be achieved with perennial grasses and legumes that are cut frequently at early stages of growth. It should be recognized that legumes can fix nitrogen from the air, but they are active scavengers for nitrate if it is present. The potential for harvesting nutrients with annual crops is generally less than with perennials because annuals use only part of the available growing season for growth and active uptake. Typical annual uptake rates of the major plant nutrients--nitrogen, phosphorus, and potassium--are listed in Table 4-11 for several commonly selected crops.

The nutrient removal capacity of a crop is not a fixed characteristic but depends on the crop yield and the nutrient content of the plant at the time of harvest. Design estimates of harvest removals should be based on yield goals and nutrient compositions that local experience indicates can be achieved with good management on similar soils.

TABLE 4-11
NUTRIENT UPTAKE RATES FOR
SELECTED CROPS
kg/ha·yr

	Nitrogen	Phosphorus	Potassium
Forage crops			
Alfalfa[a]	225-540	22-35	175-225
Bromegrass	130-225	40-55	245
Coastal bermudagrass	400-675	35-45	225
Kentucky bluegrass	200-270	45	200
Quackgrass	235-280	30-45	275
Reed canarygrass	335-450	40-45	315
Ryegrass	200-280	60-85	270-325
Sweet clover[a]	175	20	100
Tall fescue	150-325	30	300
Orchardgrass	250-350	20-50	225-315
Field crops			
Barley	125	15	20
Corn	175-200	20-30	110
Cotton	75-110	15	40
Grain sorghum	135	15	70
Potatoes	230	20	245-325
Soybeans[a]	250	10-20	30-55
Wheat	160	15	20-45

a Legumes will also take nitrogen from the atmosphere

Table E-10

Relative tolerance of selected crops to exchangeable sodium (1)

Sensitive (2)	Semi-tolerant(2)	Tolerant(2)
Avocado	Carrot	Alfalfa
(Persea americana)	*(Daucus carota)*	*(Medicago sativa)*
Deciduous Fruits	Clover Ladino	Barley
Nuts	*(Trifolium repens)*	*(Hordeum vulgare)*
Bean, green	Dallisgrass	Beet, garden
(Phaseolus vulgaris)	*(Paspalum dilatatum)*	*(Beta vulgaris)*
Cotton *(at germination)*	Fescue, tall	Beet, sugar
(Gossypium hirsutum)	*(Festuca arundinacea)*	*(Beta vulgaris)*
Maize	Lettuce	Bermuda grass
(Zea mays)	*(Lactuca sativa)*	*(Cynodon dactylon)*
Peas	Bajra	Cotton
(Pisum sativum)	*(Pennisetum typhoides)*	*(cossypium hirsutum)*
Grapefruit	Sugarcane	Paragrass
(Citrus paradisi)	*(Saccharum officinarum)*	*(Brachiaria mutica)*
Orange	Berseem	Rhodes grass
(Citrus sinensis)	*(Trifolium alexandrinum)*	*(Chloris gayana)*
Peach	Benji	Wheatgrass, crested
(Prunus persica)	*(Melilotus parviflora)*	*(Agropyron cristatum)*
Tangerine	Raya	Wheatgrass, fairway
(Citrus reticulata)	*(Brassica juncea)*	*(Agropyron cristatum)*
Mung	Oat	Wheatgrass, fairway tall
(Phaseolus aurus)	*(Avena sativa)*	*(Agropyron elongatum)*
Mash	Onion	Karnal grass
(Phaseolus mungo)	*(Allium cepa)*	*(Diplachra fusca)*
Lentil	Radish	
(Lens culinaris)	*(Raphanus sativus)*	
Groundnut *(peanut)*	Rice	
(Arachis hypogaea)	*(Oryza sativus)*	
Cram	Rye	
(Cicer arietinum)	*(Secale cereale)*	
Cowpeas	Ryegrass, Italian	
(Vigna sinensis)	*(Lolium multiflorum)*	
	Sorghum	
	(Sorghum vulgare)	
	Spinach	
	(Spinacia oleracea)	
	Tomato	
	(Lycopersicon esculentum)	
	Vetch	
	(Vicia sativa)	
	Wheat	
	(Triticum vulgare)	

Adapted from data of FAO-Unesco (1973)· Pearson (1960)· and Abrol (1982)
Source. FAO Guidelines R.S Ayers & D W Westcot (1985)

TABLE 5.1 SALT TOLERANCE OF AGRICULTURAL CROPS AS A FUNCTION OF SOIL SATURATION EXTRACT SALINITY (EC_e) WHERE RELATIVE YIELD (Y) IN PERCENT = 100 − b(EC_e − a) (FROM MAAS AND HOFFMAN 1977)

Crop	Salinity* at initial yield decline (threshold) (A)	Percent yield decrease per unit increase in salinity beyond threshold (B)	Qualitative salt tolerance rating†
	dS/m	%/(dS/m)	
Alfalfa *Medicago sativa*	2.0	7 3	MS
Almond *Prunus dulcis*	1 5	19	S
Apple *Malus sylvestris*	—	—	S
Apricot‡ *Prunus armeniaca*	1 6	24	S
Avocado‡ *Persea americana*	—	—	S
Barley (forage)§ *Hordeum vulgare*	6 0	7 1	MT
Barley (grain)§ *Hordeum vulgare*	8 0	5	T
Bean *Phaseolus vulgaris*	1 0	19	S
Beet, garden‖ *Beta vulgaris*	4 0	9	MT
Bentgrass *Agrostis palustris*	—	—	MS
Bermudagrass# *Cynodon Dactylon*	6 9	6 4	T
Blackberry *Rubus spp*	1 5	22	S
Boysenberry *Rubus ursinus*	1 5	22	S
Broadbean *Vicia Faba*	1 6	9 6	MS
Broccoli *Brassica oleracea botrytis*	2.8	9 2	MS
Bromegrass *Bromus inermis*	—	—	MT
Cabbage *Brassica oleracea capitata*	1 8	9 7	MS
Canarygrass, reed *Phalaris arundinacea*	—	—	MT
Carrot *Daucus Carota*	1 0	14	S
Clover alsike ladino red, strawberry *Trifolium spp*	1 5	12	MS
Clover berseem *T alexandrinum*	1 5	5 7	MS
Corn (forage) *Zea Mays*	1 8	7 4	MS
Corn (grain) *Zea Mays*	1 7	12	MS
Corn sweet *Zea Mays*	1 7	12	MS
Cotton *Gossypium hirsutum*	7 7	5 2	T
Cowpea *Vigna unguiculata*	1 3	14	MS
Cucumber *Cucumis sativus*	2.5	13	MS
Date palm *Phoenix dactylifera*	4 0	3 6	T

3 of 4

TABLE 5.1 SALT TOLERAN
OF SOIL SATURATION EXTRA
IN PERCENT = 100 − b(

Crop
Fescue tall *Festuca elatior*
Flax *Linum usitatissimum*
Grape‡ *Vitis spp*
Grapefruit‡ *Citrus x paradisi*
Hardinggrass *Phalaris tuberosa*
Lemon‡ *Citrus limon*
Lettuce *Lactuca sativa*
Lovegrass** *Eragrostis spp*
Meadow Foxtail *Alopecurus pratensis*
Millet, Foxtail *Setaria italica*
Okra *Abelmoschus esculentus*
Olive *Olea europaea*
Onion *Allium Cepa*
Orange *Citrus sinensis*
Orchardgrass *Dactylis glomerata*
Peach *Prunus Persica*
Peanut *Arachis hypogaea*
Pepper *Capsicum annum*
Plum‡ *Prunus domestica*
Potato *Solanum tuberosum*
Radish *Raphanus sativus*
Raspberry *Rubus idaeus*
Rhodesgrass *Chloris Gayana*
Rice paddy§ *Oryza sativa*
Ryegrass, perennial *Lolium perenne*
Safflower‡ *Carthamus tinctorius*
Sesbania§ *Sesbania exaltata*
Sorghum *Sorghum bicolor*

)F FARM IRRIGATION SYSTEMS

CROPS AS A FUNCTION
ERE RELATIVE YIELD (Y)
ND HOFFMAN 1977)

Percent yield crease per unit rease in salinity yond threshold (B)	Qualitative salt tolerance rating†
%/(dS/m)	
7 3	MS
19	S
—	S
24	S
—	S
7 1	MT
5	T
19	S
9	MT
—	MS
6 4	T
22	S
22	S
9 6	MS
9 2	MS
—	MT
9 7	MS
—	MT
14	S
12	MS
5 7	MS
7 4	MS
12	MS
12	MS
5.2	T
14	MS
13	MS
3 6	T

TABLE 5 1 SALT TOLERANCE OF AGRICULTURAL CROPS AS A FUNCTION OF SOIL SATURATION EXTRACT SALINITY (EC_e) WHERE RELATIVE YIELD (Y) IN PERCENT = 100 − b(EC_e − a) (FROM MAAS AND HOFFMAN 1977)

Crop	Salinity* at initial yield decline (threshold) (A)	Percent yield decrease per unit increase in salinity beyond threshold (B)	Qualitative salt tolerance rating†
	dS m	%/(dS/m)	
Fescue tall *Festuca elatior*	3 9	5 3	MT
Flax *Linum usitatissimum*	1 7	12	MS
Grape‡ *Vitis* spp	1 5	9 6	MS
Grapefruit‡ *Citrus x paradisi*	1 8	16	S
Hardinggrass *Phalaris tuberosa*	4 6	7 6	MT
Lemon‡ *Citrus limon*	—	—	S
Lettuce *Lactuca sativa*	1 3	13	MS
Lovegrass * *Eragrostis* spp	2 0	8 4	MS
Meadow Foxtail *Alopecurus pratensis*	1 5	9 6	MS
Millet Foxtail *Setaria italica*	—	—	MS
Okra *Abelmoschus esculentus*	—	—	S
Olive *Olea europaea*	—	—	MT
Onion *Allium Cepa*	1 2	16	S
Orange *Citrus sinensis*	1 7	16	S
Orchardgrass *Dactylis glomerata*	1 5	6 2	MS
Peach *Prunus Persi a*	1 7	21	S
Peanut *Arachis hypogaea*	3 2	29	MS
Pepper *Capsicum annum*	1 5	14	MS
Plum‡ *Prunus domestica*	1 5	18	S
Potato *Solanum tuberosum*	1 7	12	MS
Radish *Raphanus sativus*	1 2	13	MS
Raspberry *Rubus idaeus*	—	—	S
Rhodesgrass *Chloris Gayana*	—	—	MS
Rice paddy§ *Oryza sativa*	3 0	12	MS
Ryegrass, perennial *Lolium perenne*	5 6	7 6	MT
Safflower‡ *Carthamus tinctorius*	—	—	MT
Sesbania§ *Sesbania exaltata*	2.3	7	MS
Sorghum *Sorghum bicolor*	—	—	MS

[redacted]

APPENDIX E

Biothane®
corporation
2500 Broadway /Drawer 5
Camden, New Jersey 08104
609-541-3500

August 4, 1995

Mr. Stephen Hempel
Harza Environmental Service
Sears Tower
233 South Wacker Drive
Chicago, IL 60606-6392

Dear Mr. Hempel:

Thank you for your continued interest regarding the yeast application in Jordan. In response to our discussion, we are pleased to offer the following information.

In developing the following Expected Performance Summaries (EPS s), we have used the information you supplied to us regarding the characteristics of the wastewater. EPS II is a scope for a full scale installation while EPS III reflects a typical scope for our package plants.

Expected Performance Summary II

The full scale BIOTHANE UASB EPS reflects a flow of 34,000 gpd and a BOD of 27,000 mg/l. Removal efficiencies of 75% for COD and 90% for BOD are applicable as in the EPS of 17 July. Energy production in the form of methane gas will be equivalent to about 62 million Btu's per day. Excess sludge production will be equivalent to approximately 800 gallons per day as wet sludge.

A digester of volume capacity 500 m^3, with dimensions 58 ft long by 14 ft wide by 20 ft high is required. The conditioning tank that precedes the digester will be of volume capacity 180 m^3, with dimensions 19 ft diameter by 20 ft sidewall height.

For budgetary guideline purposes, we estimate the price for supply, installation, and start-up of a BIOTHANE system this size, if built in the US to be $1.1 million. Included in the workscope at this time are the following components:

1. The digester vessel and foundation;
2. the patented internal settlers;
3. digester feed distribution system;
4. internal recirculation capability;
5. the conditioning tank complete with mixer and foundation;
6. process piping and mechanical between the conditioning tank, and digester;

7. chemical dosing system (excluding bulk storage);
8. instrumentation for automated control;
9. pressure regulating valve to maintain gas backpressure within the digester vessel;
10. feed pumps and reversible sludge pump;
11. automatic safety flare;
12. odor control,
13. inoculant charge of biomass from existing BIOTHANE facilities (20,000 gallons - excluding freight);
14. construction management associated with our workscope;
15. thirty days of on site start up and training;
16. performance warranty based upon BOD purification.

Not included in the workscope and budget price are the following items:

1. temperature regulation (if required);
2. upstream screening and/or FOG removal (if required);
3. gas handling beyond the flare;
4. equipment and control building;
5. surplus sludge tank;
6. site preparation;
7. final grading and landscaping;
8. yard piping;
9. environmental and construction permits;
10. taxes, duties, custom/brokerage;
11. freight;
12. please note that we have assumed a soil bearing capacity of 3000 psf.

Expected Performance Summary III

This EPS reflects a flow of 145,000 gpd and a BOD of 5,400 mg/l. Removal efficiencies are the same, with energy production equivalent to about 36 million Btu per day. Excess sludge production will be approximately 500 gallons per day as wet sludge

A digester of volume capacity 400 m^3, with dimensions 50 ft long by 14 ft wide by 20 ft sidewall height is required for this application. The conditioning tank will also be 180 m^3.

For budget guideline purposes, we estimate the price for supply, installation, and start-up of a BIOTHANE system this size, if built in the US to be $900,000. Included in the workscope at this time are the following components:

1. the digester vessel and foundation complete with internal topworks and internal feed distribution network;

Biothane corporation

2. the conditioning tank complete with mixer and foundation;
3. mechanical piping between digester and conditioning tank;
4. instrumentation and control package with microprocessor monitoring;
5. chemical dosing system (excluding bulk storage);
6. biomass supply (20,000 gallons - excluding freight);
7. feed pumps and reversible sludge transfer pump;
8. safety flare;
9. odor control;
10. construction management services;
11. 15 days of on-site start up;
12. process warranty for BOD purification.

Not included in the price workup at this time are:

1. temperature regulation (if required),
2. upstream screening and/or FOG removal (if required);
3. gas handling beyond the flare;
4. equipment and control building;
5. surplus sludge tank;
6. site preparation and civil;
7. yard piping and pumping;
8. construction utilities;
9. taxes, duties, custom/brokerage;
10. freight;
11. environmental and construction permits;
12. please note that we have assumed a soil bearing capacity of 3000 psf.

Steve, please note on EPS II that a large recycle flow is needed, in turn requiring external dilution.

We look forward to further discussions regarding this potential project and the advantages of working with Biothane Corporation and how we can help solve your client's wastewater treatment needs. If you have any questions or desire additional information, please contact us. Again, thank you for the opportunity.

Sincerely,

Nadine J. DeSanto
Marketing Coordinator

NJD/enclosures

PRELIMINARY STUDY FOR HARZA ENVIRONMENTAL
BIOTHANE SYSTEM EXPECTED PERFORMANCE SUMMARY II

August 4, 1995

A. DESIGN - PARAMETERS

Digester Volume (m^3)	500
Factory Flow ($gpd/m^3/d$)	34,000/129
Recycle Flow ($gpd/m^3/d$)	120,000/456
External Dil Flow (gpd)	10,000/38
Hydraulic Retention Time (hrs)	72
Total COD load Capacity ($Kg/m^3/d$)	14.9
Approximate Space Requirement (ft^2)	4000

B. WATER PURITY

	Influent Concentration (ppm)	Influent Load (Kg/d)	Effluent Concentration (ppm)	Effluent Load (Kg/d)	Reduction (%)
Total COD	58000	7470	15826	2038	73
Soluble COD	55960	7207	13990	1802	75
Suspended Solids	2000	258	1800	232	10
Suspended Solids (as COD)	2040	263	1836	236	10
Total BOD_5	27000	3477	2700	348	90

C. ANAEROBIC GAS PRODUCTION

COD Available (Kg/d)	5432
COD Converted (Kg/d)	5214
Total Gas Flow (cfm)	64
Percent Methane (%)	70
Methane Flow (cfm)	45
Methane Produced (m^3/d)	1825
Caloric Value (BTU/ft^3)	950
MBTU Produced (per day)	62

D. ANAEROBIC SLUDGE PRODUCTION

COD Available (Kg/d)	5432
COD Converted (Kg/d)	217
Organic Sludge Growth (Kg/d)	217
VSS (%)	70
Total Solids Increase (Kg/d)	310
Solids Content (%)	10
Disposal Volume (m^3)	3
Surplus Sludge Tank Vol (m^3)	N/A

PRELIMINARY STUDY FOR HARZA ENVIRONMENTAL
BIOTHANE SYSTEM EXPECTED PERFORMANCE SUMMARY III

August 4, 1995

A. DESIGN - PARAMETERS

Digester Volume (m^3)	400
Factory Flow ($gpd/m^3/d$)	145,000/549
Recycle Flow ($gpd/m^3/d$)	119,000/450
External Dil Flow (gpd)	0
Hydraulic Retention Time (hrs)	17.5
Total COD load Capacity ($Kg/m^3/d$)	11.3
Approximate Space Requirement (ft^2)	3000

B. WATER PURITY

	Influent		Effluent		
	Concentration (ppm)	Load (Kg/d)	Concentration (ppm)	Load (Kg/d)	Reduction (%)
Total COD	8230	4520	2495	1370	70
Soluble COD	7557	4151	1889	1038	75
Suspended Solids	660	362	594	326	10
Suspended Solids (as COD)	673	370	606	333	10
Total BOD_5	5400	2966	540	297	90

C. ANAEROBIC GAS PRODUCTION

COD Available (Kg/d)	3150
COD Converted (Kg/d)	3024
Total Gas Flow (cfm)	37
Percent Methane (%)	70
Methane Flow (cfm)	26
Methane Produced (m^3/d)	1058
Caloric Value (BTU/ft^3)	950
MBTU Produced (per day)	36

D. ANAEROBIC SLUDGE PRODUCTION

COD Available (Kg/d)	3150
COD Converted (Kg/d)	126
Organic Sludge Growth (Kg/d)	126
VSS (%)	70
Total Solids Increase (Kg/d)	180
Solids Content (%)	10
Disposal Volume (m^3)	2
Surplus Sludge Tank Vol (m^3)	N/A

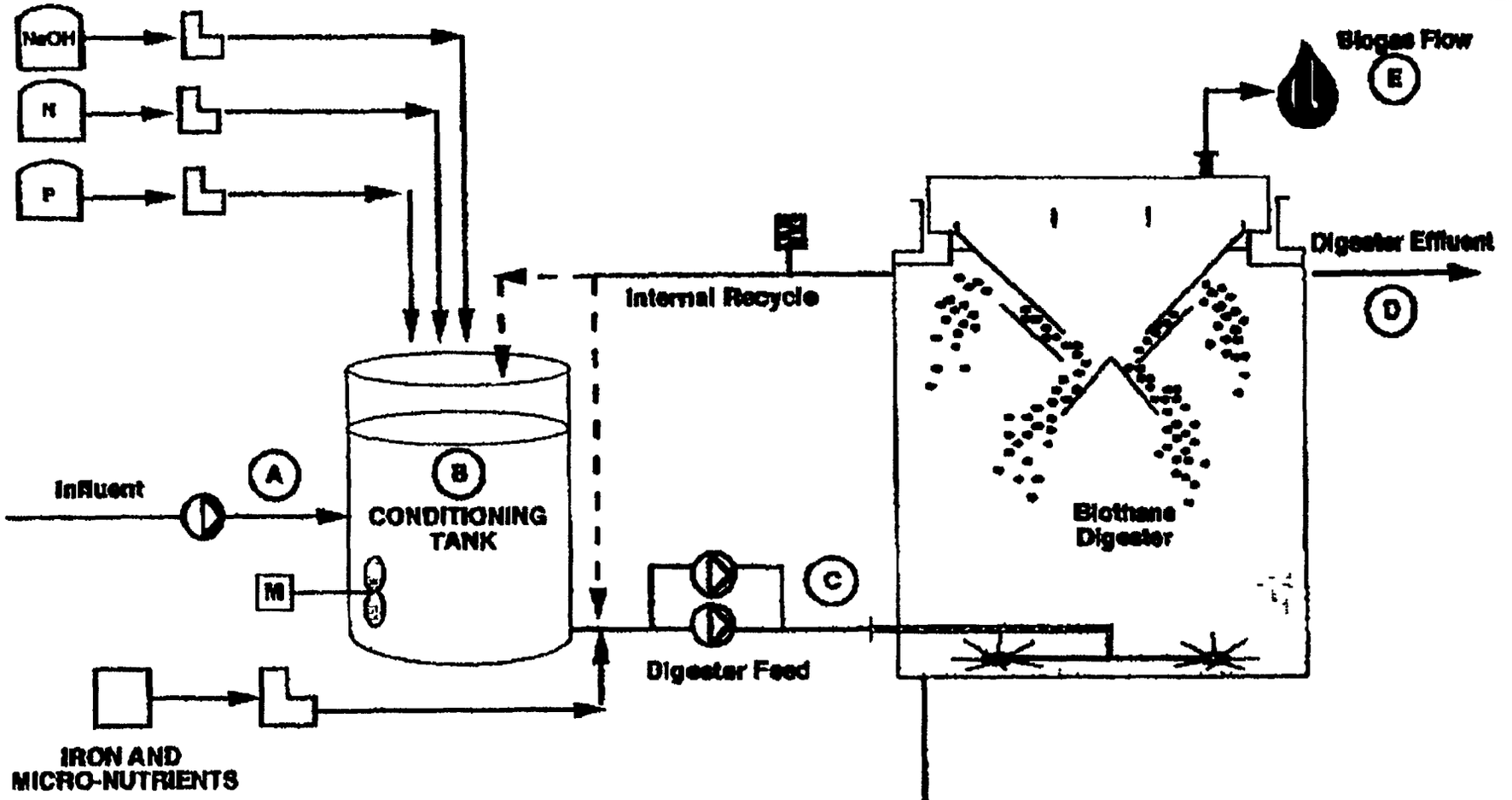

INSTRUMENTATION MONITORING/CONTROL POINTS

- (A) MONITOR TEMPERATURE, pH, FLOW
- (B) CONTROL TEMPERATURE, LEVEL
- (C) CONTROL pH, MONITOR FLOW
- (D) MONITOR pH
- (E) MONITOR GAS FLOW

Biothane

biothane advantage

ROVEN RELIABILITY
lore than one hundred ıdustrial-scale plants now in ıperation throughout the world

MAJOR REDUCTION IN BOD
Over 90% in most applications Significantly lowers municipal surcharges and improves operating efficiency of on-site secondary treatment systems

PRODUCTION OF USABLE ENERGY
Generates methane at approximately 0 35 cubic meter per Kg COD converted Helps offset factory energy costs.

RAPID HYDRAULIC THROUGHPUT
Hydraulic retention time can be measured in hours Permits responsive control of system operations.

HIGH LOADING CAPABILITY
Readily achieves 10-18 Kg COD per cubic meter of digester volume per day Higher loadings possible as biomass adapts to specific wastewater

QUICK SYSTEM START-UP
Full performance can be achieved in less than eight weeks with inoculation of granular biomass

LOW SLUDGE PRODUCTION
Produces only one-tenth as much sludge as aerobic systems treating equivalent BOD load Dramatically reduces disposal problems.

HIGHLY SETTLEABLE SLUDGE
Develops remarkable sludge granules which are characteristic of the Biothane process Greatly facilitates biomass handling

STABLE OPERATION
Resists upset from variety of wastewater pH temperature and COD load conditions System can remain dormant during factory "downtime" without affecting future performance

COMPACT SIZE
Needs only a small fraction of equivalent aerobic space requirements An area less than 1/3 acre can accommodate a Biothane system treating 50 000 Kg of COD per day

ECONOMICAL OPERATION
Automated system control provides reliable efficient operation without intensive labor costs. Digester is easy to maintain because it has no moving parts

LONG LIFE
Attention to quality control and the use of state-of-the-art materials of construction assures a long operating life for the system components.

CLOSED SYSTEM
Sealed tank helps contain odors Allows installation in urban areas

VERSATILITY IN APPLICATION
Compact self-contained anaerobic module can be easily interfaced with existing wastewater treatment systems.

COST EFFECTIVE
The bottom line The Biothane process actually turns waste into an asset because methane recovery helps offset energy costs as wastewater treatment problems are solved.

the economics make sense

BIOGAS RECOVERY
A 1 0 MGD flow of wastewater containing a COD concentration of 6500 mg/l can result in the generation of methane approaching 300 000 cubic feet per day (2700 therms) This can realize savings of 620,000 gallons of fuel oil in a 320-day operating year with a value of $500 000

REDUCED SEWAGE ASSESSMENTS
An industry paying $70 per 1000 lbs BOD discharged with the aforementioned wastewater characteristics can save as much as $700 000 per 320-day operating year Even larger potential savings can be accrued with higher-loaded wastewaters

OPERATIONAL SAVINGS
Very low energy consumption simplicity of operation and maintenance and the low production of biomass makes possible substantial savings relative to treatment of wastewater by on-site aerobic systems

(cover photo) the compact Biothane system consisting of four covered digesters (left center) installed at Anheuser-Busch s Baldwinsville New York brewery removes more than 90% of the organic pollutants contained in the high-strength wastewater prior to final polishing in the large aerobic basins and clarifiers the inset graph highlights the excellent treatment efficiency by providing influent and effluent SCOD data through the anaerobic digesters for three months following start up of the Biothane system

The bottom line with the Biothane process is fast payback two to three years for many applications.

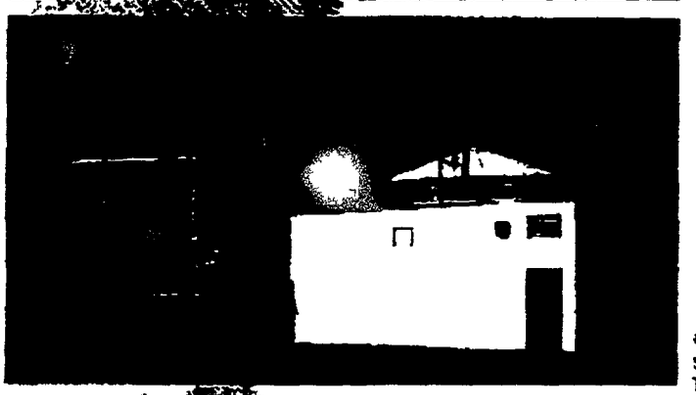

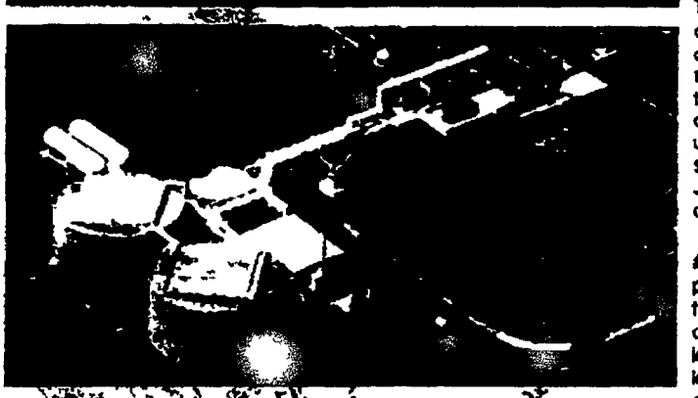

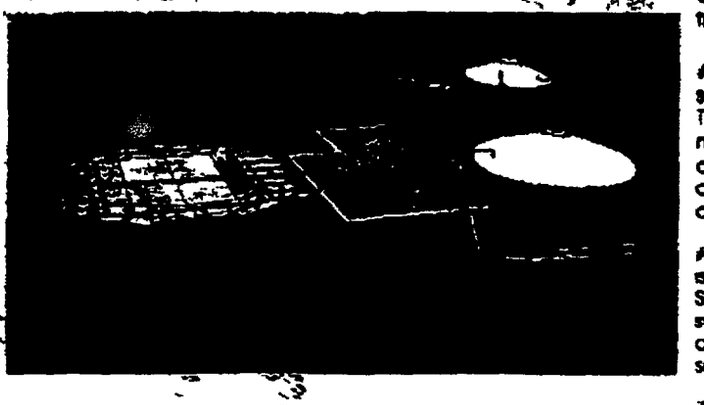

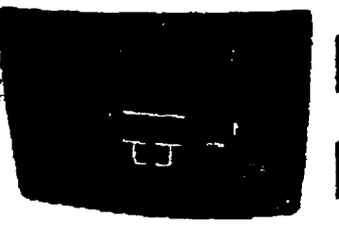

State-of the-art microprocessor monitoring and control makes the Biothane process easy to operate and maintain and allows for fast automated response to any potential problems to insure long term system stability

#1 Biothane systems come in various shapes and sizes This compact concrete structure located at The J M Smucker Company is compartmented to contain a 600 m³ digester vessel a 200 m³ conditioning tank a small surplus sludge vessel and the equipment and control building pictured towards the front right The common wall construction is economical and practical for system users with high wastewater flow and relatively low strength organic load The Biothane facility at The J M Smucker plant is designed to treat a COD load of 5000 Kg/d contained in a flow of 0 4 MGD

#2 The gleaming silver structure to the left of the picture is a 200 m³ Biothane package plant installed to treat wastewater from frozen yogurt production at Colombo Inc This package digester concept is ideal for system users who have organic loads of less than 6000 Kg/d COD The small equipment and control building is located to the right of the digester and the fiberglass domed roof of the upstream conditioning tank is visible in the background The system at Colombo is designed to treat 2000 Kg/d of COD contained in a flow of 0 1 MGD

#3 The twin 2500 m³ digesters at Eagle Yeast each treat 26 000 Kg/d of COD contained in a flow of 0 3 MGD This New Jersey facility utilizes the generated biogas to supply a majority of the energy required in the manufacturing of its baker s yeast product The system has been in operation since 1985 and routinely achieves a 90% BOD removal efficiency The concept of parallel digester operation introduced so successfully at Eagle Yeast has been used subsequently in several large Biothane treatment installations

#4 The Biothane process offers significant energy savings compared to aerobic treatment systems The generation of combustible biogas rich in methane can be utilized by the production facility and the simple space-efficient process hydraulics and controls require minimal horsepower to operate and can be skid-mounted

#5 The space compactness of the Biothane system is illustrated by the treatment of wastewater from Stone Container a recycle paper mill The entire system treating 7500 Kg/d COD contained in a flow of 0 3 MGD is located on a site of less than 7000 square feet in area

FILTRATION

The INDUSTRIAL Multi Media Filter represents a significant step forward in water filtration technology It offers you a highly efficient filter that does not take up a lot of space does not use much water for backwash filters much longer during the service cycle with low pressure drop before backwash is required and offers many other advantages detailed in this brochure

The design is highly efficient—several layers of scientifically selected filter media are contained in a single tank and stratified so that as water flows down through the various media maximum filtering takes place in each layer as described in the paragraph Quality Minerals below The design overcomes the basic fault of most sand and other single-media filters that provide a maximum filtering efficiency only in the top few inches of the filter bed The INDUSTRIAL Multi Media filter operates at maximum efficiency throughout the entire filter bed

The various media have been selected according to material density This means that during backwash the media layers are automatically restratified so that the filter is immediately ready for service as soon as backwash is completed

TYPE 212's FEATURES

❶ Quality Minerals

Each layer of mineral in the INDUSTRIAL Multi Media filter has been specifically selected for a specific function The top layer of anthracite removes the larger particles without being blinded by the fines The second layer of filter sand removes particles to the clarity typical of conventional sand filters The third and fourth layers are two different sizes of garnet which polish filter by removing particles down to 10 microns The entire bed becomes the filter medium permitting a high dirt holding capacity with a finely polished effluent quality

❷ Automatic Valve System

INDUSTRIAL s factory assembled valve nest incorporates Y–pattern diaphragm valves for positive control with full flow offers low pressure loss high flow rate capability and either hydraulic or pneumatic operation Individual valves have less bulk less weight and are less complicated All parts can be serviced without disturbing the piping The valves open and close at a rate which positively assures that the valve arrangement is free of water hammer for long lived operation

❸ Timer-Controller

The individual diaphragm valves are controlled by the action of a four position motor driven brass bodied rotary pilot valve which sequences the filter through the steps of Backwash Settle Rinse and Return to Service The action of the rotary pilot valve is controlled by a fully adjustable cycle timer The cycle timer is initiated by a calendar time clock which provides for the backwashing process to occur from one to seven times in a seven day period As an option initiation may be accomplished by a signal from a differential pressure indicating switch The initiation may also be accomplished by manual push button and the system may also be manually indexed through a complete cycle in the event of a power failure

and are tested at 150% of design pressure The interior of the tank is lined with a two part epoxy which is EPA approved for potable water Tankage may be optionally ASME code stamped

❺ Distribution System

Upper distribution is accomplished by a single point or multiple point baffle type depending on tank diameter The underdrain will be of the hub and radial type covered by a graded gravel supporting bed False bottoms are not employed

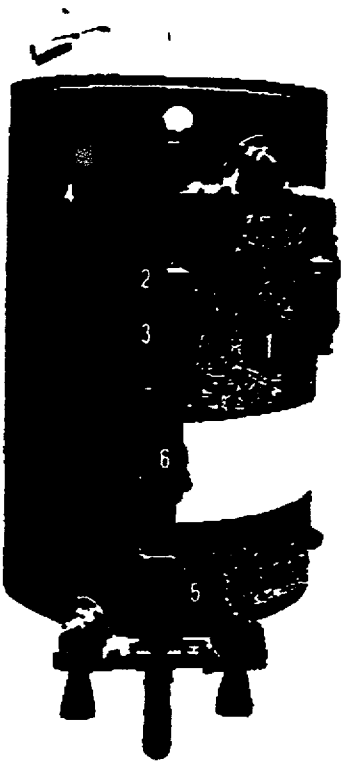

❻ Packaging

Systems are complete from inlet to outlet and include pressure gauge sample valve and backwash flow rate controller effective over a 30 to 100 psi pressure range Multiple units include electrical lock-out to prevent more than one filter backwashing at a time Optionally multiple units may be skid mounted and prepiped

OPERATING DATA		
PRESSURE	20 psi-100 psi 1.5-7.0 bar	
TEMPERATURE	40°F -120°F 5°C-50°C	Standard
	up to 180°F up to 80°C	Available as Optional
ELECTRICAL REQUIREMENTS	120 v 60 Hertz 220 v 50 Hertz	

WARRANTED against failure due to faulty workmanship materials and corrosion for a period of 1 year

INDUSTRIAL
since 1927

INDUSTRIAL FILTER & PUMP MFG CO • 5900 OGDEN AVE • CICERO, IL 60650-3888 • 708-656-7800 • FAX 708-656-7806

• PRESSURE FILTERS • PACKAGE AND CUSTOM LIQUID WASTE TREATMENT SYSTEMS • VULCANIZED RUBBER LINING • ION EXCHANGERS • EVAPORATORS • PUMPS • TEST CABINETS • SYSTEMS AUTOMATION

Vanguard® air strippers effectively remove organic solvents, chlorinated hydrocarbons, fuel/gasoline hydrocarbons, degreasers, and certain other substances from water.
The following is a partial list of these substances.

Ammonia
Benzene
Bromodichloromethane
Bromoform
Bromomethane
Carbon tetrachloride
Chlorobenzene
Chloroethane
Chloroform
Chloromethane
DBCP
Dibromochloromethane
1, 4-Dichlorobenzene
Dichlorodifluoromethane
1, 1 Dichloroethane
1, 2 Dichloroethane
1 1 Dichloroethylene
t 1 2 Dichloroethylene
1, 2 Dichloropropane
c 1, 3-Dichloropropene
t 1 3 Dichloropropene
EDB
Ethylbenzene
Hydrogen sulfide
Methane
Methylene chloride
MTBE
Radon
1, 1, 2, 2 Tetrachloroethane
Tetrachloroethylene (PCE)
Toluene
1 1, 1 Trichloroethane
1, 1, 2 Trichloroethane
Trichloroethylene (TCE)
Trichlorofluoromethane
1 2 4 Trimethylbenzene
Vinyl chloride
Xylenes

PHYSICAL SPECIFICATIONS:

	Vanguard® Air Strippers				
Models	ΔS-1 Series	ΔS-1 5 Series	ΔS-2 Series	ΔS-3 Series	ΔS-4 Series
Stripper Design	Counterflow, Forced Draft				
Nominal dia., Ft.	1 0	1 5	2 0	3.2	4 1
Delta Pak™ hgt., Ft.	14 5	to	23.5	5 5 to 17 5	6 5 to 18.5
Water Flow, GPM	2 to 30	7 5 to 50	11 to 90	35 to 150	55 to 350
Motor HP	1 5	1 5	1 5 to 5	2 to 5	3 to 7 5
Fan Type	Centrifugal Blower				
	Direct	Drive	Direct or Belted	Belted	Drive
	Materials of Construction:				
SHELL	FRP		Or	Polyethylene	
PACKING	PVC	PVC	PVC	PVC	PVC
PIPING	PVC	PVC	PVC	PVC	PVC

Above Specifications Are Subject To Change Without Notice In The Interest Of Product Improvement.

Form ΔS-1300 3/84
Printed In U.S.A.
Revised 5/90

The information, recommendations and opinions set forth herein are offered solely for your consideration, inquiry and verification, and are not, in part or total, to be construed as constituting a warranty or representation for which we assume legal responsibility. Nothing contained herein is to be interpreted as authorization to practice a patented invention without a license.

Delta Cooling Towers Inc
114 Clinton Road
P O Box 952
Fairfield New Jersey 07004 2970
Telephone 201/227-0300
Fax 201/227-0458

Delta Cooling Towers

(1) DELTA VANGUARD® AIR STRIPPERS
1'0" – 5'0" IN 6 INCH INCREMENTS
5'0" – 10'0" IN 1 FOOT INCREMENTS
SHELL MATERIAL FRP OR S/S

PACKING
DELTA-PAK® (STRUCTURED) OR RANDOM/DUMPED

(3) SKID MOUNTING
STEEL PLATFORM, COATED WITH AIR DRY PHENOLIC BLACK

(4) BLOWER WEATHER ENCLOSURE PROTECTS MOTOR & DRIVE FROM ELEMENTS

(6) ACCESS LADDER & SAFETY CAGE MATERIAL ALUMINUM OR FIBERGLASS, WITH NON-SKID RUNGS, MEETS OR EXCEEDS OSHA STANDARDS.

(8) VIBRATION CUT OUT SWITCH PROTECTS BLOWER FROM EXCESSIVE VIBRATION.

(13) BLOWER AIR PREHEATER FOR SEVERE WINTER OPERATION

(14) TRANSFER PUMP PACKAGE MOUNTING & PIPING AVAILABLE WITH SKID ONLY

(16) TANKS
200–2000 GALLON CAPACITY MATERIAL. HDPE COVERS & FITTINGS AVAILABLE

(17) WELL PUMPS
STAINLESS STEEL
TEFLON SEALS
ELECTRIC OR PNEUMATIC

(18) WELL LIQUID LEVEL CONTROL, INTRINSICALLY SAFE

(19) CONTROL PANEL
NEMA 4 – STD
NEMA 7 12 – OPT

(21) TELEMETRY REMOTE TERMINAL ALARM/STATUS/RELAYS SOFTWARE

(23) CHEMICAL CLEANING SYSTEM
5–150 GPM 1–5 HP.
SKID MOUNTED PREWIRED PREPIPED
CHEMICALLY RESISTANT PUMP & MOTOR
MIXING CHAMBER HOSE VALVES GAUGES
pH CONTROLLER – OPTIONAL
STARTER – OPTIONAL
ADDITIONAL HOSE – OPTIONAL

(24) SOIL VENTING SYSTEM COMPLETE WITH REGENERATIVE VACUUM BLOWER MOISTURE SEPARATOR IN-LINE FILTER INLET & OUTLET SILENCERS

(26A) LIQUID PHASE CARBON ADSORPTION SYSTEMS
SINGLE CANISTERS AVAILABLE FOR 3–200 GPM
PRESSURE RELIEF VALVE AVAILABLE (NOT SHOWN

(26B) VAPOR PHASE CARBON ADSORPTION SYSTEMS
SINGLE CANISTERS AVAILABLE FOR 50–5000 SCF
DUCT WORK AVAIL.

(26C) EXPLOSION PROOF AIR HEATER AVAIL. IN ELECTR NATURAL GAS OIL AND STEAM.

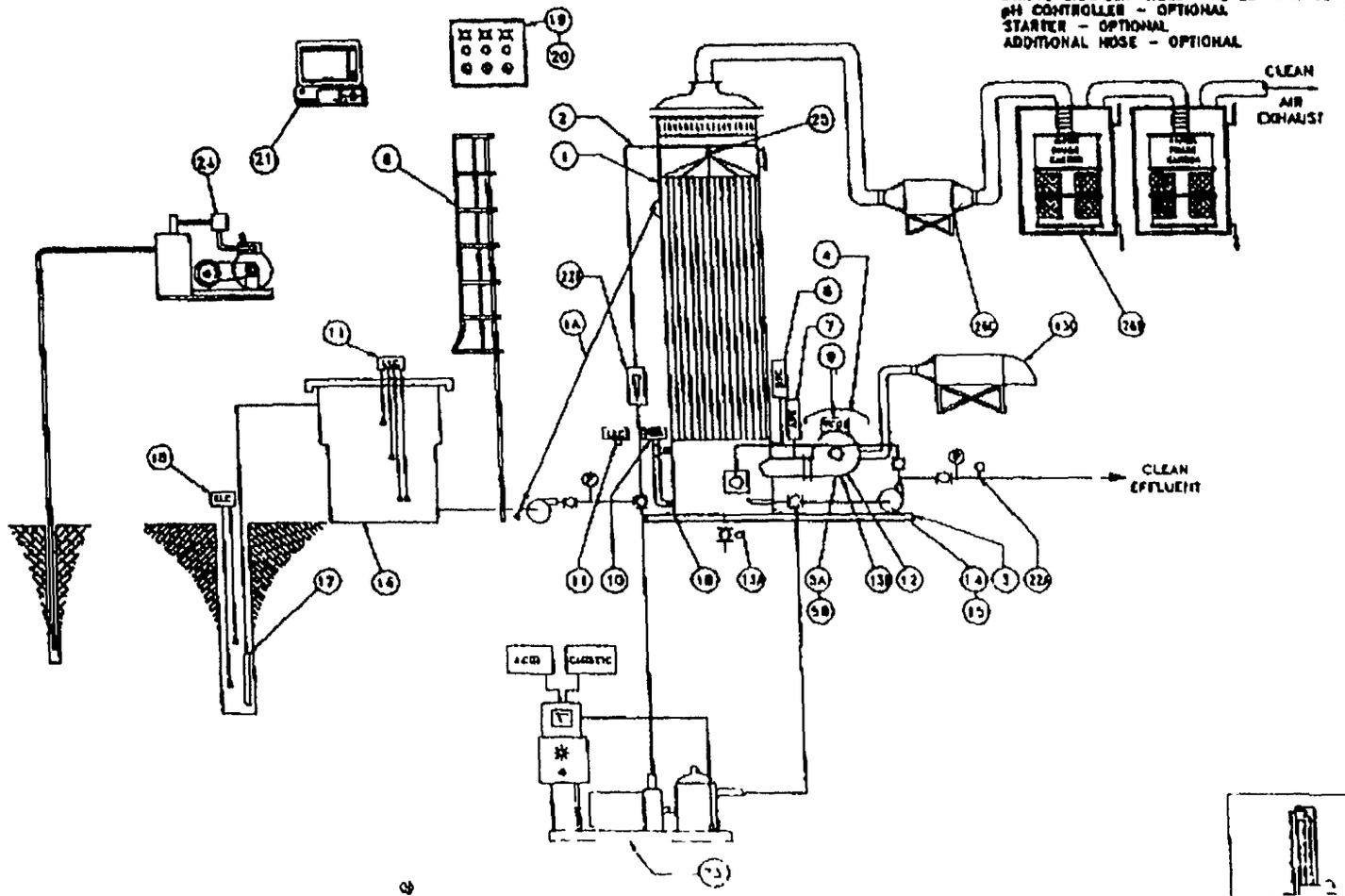

BILL OF MATERIALS

ITEM	DESCRIPTION
1	VANGUARD® AIR STRIPPER
1A	GUY WIRE PACKAGE
1B	FREE STANDING DESIGN
2	HIGH FLOW OPTION
3	SKID MOUNTING
4	BLOWER WEATHER ENCLOSURE
5	BLOWER COATING OPTIONS
5A	MASTIC COATING
5B	PREMIUM CORROSION PROTECTION
6	LADDER & CAGE
7	AIR FLOW SWITCH
8	DIFFERENTIAL PRESSURE GAUGE
9	VIBRATION CUT OUT SWITCH
10	HIGH SUMP LEVEL SWITCH
11	LIQUID LEVEL CONTROL PACKAGE
12	X THA AIR FLOW
13	ANTI FREEZE OPTIONS
13A	DRAIN VALVE ACTUATOR
13B	TWO SPEED FAN MOTOR
13C	BLOWER AIR PREHEATER
14	TRANSFER PUMP PACKAGE
15	PREMOUNTING OF TRANSFER PUMP
16	STORAGE TANK
17	WELL PUMP
18	WELL LIQUID LEVEL CONTROLS
19	CONTROL PANEL
20	PREMOUNT & PREWIRE OF C.P.
21	TELEMETRY REMOTE TERMINAL SYSTEM
22	FLOWMETER TYPES
22A	FLOWMETER/TOTALIZER
22B	ROTOMETER/FLOWMETER
23	CHEMICAL CLEANING SYSTEM
24	SOIL VENTING SYSTEM
25	DISTRIBUTION NOZZLE(S)
26	CARBON ADSORPTION SYSTEM
26A	LIQUID PHASE CARBON
26B	VAPOR PHASE CARBON
26C	EXPLOSION PROOF AIR HEATER

DELTA COOLING TOWERS, IN

VANGUARD® AIR STRIPPER OPTIONS

SAVE: ***Capital, Installation & Operating Costs***

GAIN: ***Design Flexibility, Improved Mixing & Year-Round Performance***

TORNADO®

A High-Efficiency,

Horizontally Mixing, Aspirating Aerator

The TORNADO aerator represents the most innovative, yet proven solution to aeration equipment design The TORNADO is a **high-efficiency, totally self-contained, horizontally mixing, solid shaft aspirating aerator** Mounted on floats or brackets, it uses a subsurface propeller to aerate and mix all or part of a basin

TORNADO aerators are ideally suited for

APPLICATIONS

- Wastewater Treatment
- Cold Weather Operation / Ice Control
- Supplemental Aeration
- VOC Removal
- Odor and Algae Control
- Leachate Treatment

INDUSTRIES

- Chemical Processing
- Wine & Beverage Manufacturers
- Textile Industries
- Pulp & Paper Mills
- Municipal Wastewater Treatment
- Dairies

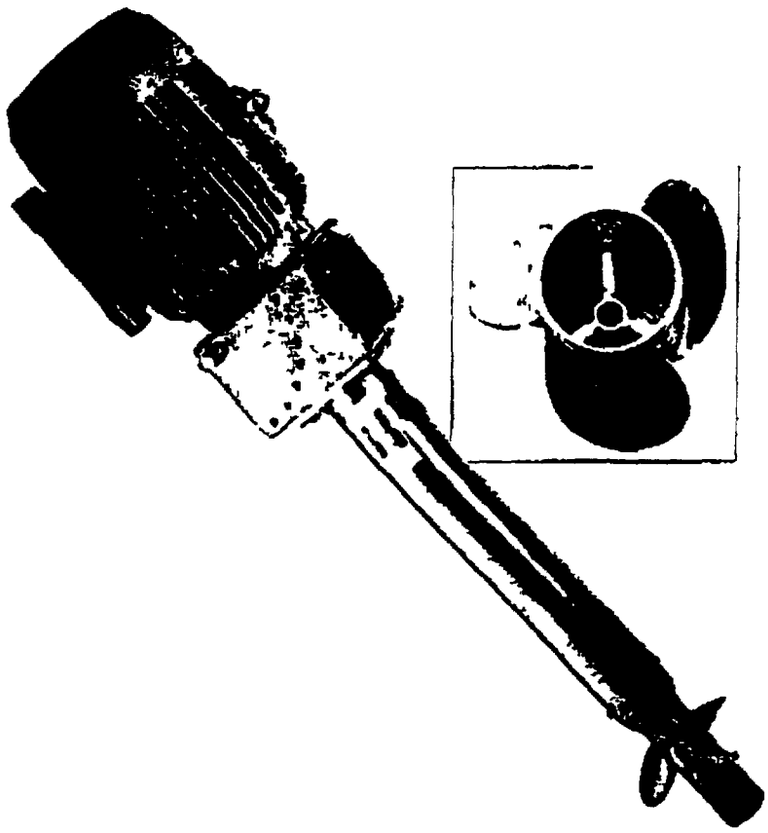

TORNADO aerators convert the least amount of energy into the maximum amount of aeration and mixing giving you

High **OXYGEN TRANSFER EFFICIENCY** - the ability to dissolve or transfer oxygen to water, and

High **BASIN MIXING EFFICIENCY** - the effective dispersion of oxygen while maintaining solids in suspension.

2.0 SAFETY PRECAUTIONS

Any equipment that involves water electricity and moving parts is potentially dangerous! Owners and equipment operators are responsible to see that everyone follows the established safety rules and the safety rules listed in this manual. AEROMIX is not responsible for injury or property damage caused by unsafe equipment operation

1. **Read this manual before operating the equipment!**
2. Always keep yourself and others away from the propeller when the aerator is operating in or out of the water
3. Never let anyone swim in a pond which has an aerator operating
4. While installing an aerator make sure the propeller is clear of any submerged items such as mooring or electrical cable
5. Make sure the electrical circuits are locked out (disconnected) whenever equipment is being handled or serviced
6. If the aerator is used for de-icing make sure signs are posted in accordance with state or local laws advising of thin ice and open water
7. Never climb on float or mounting assemblies while the equipment is operating
8. See additional safety precautions regarding the coupling flanges in Appendix A

3.0 OPERATING PRINCIPLE

FIGURE 2 illustrates an aerator in operation Water moving past the propeller creates a low pressure zone at the propeller hub This draws air through the draft tube air inlet hole down to the propeller Action of the propeller mixes the air stream with the water resulting in tiny bubbles The air and water mixture is forced away from the propeller both horizontally and vertically effectively mixing and oxygenating the water

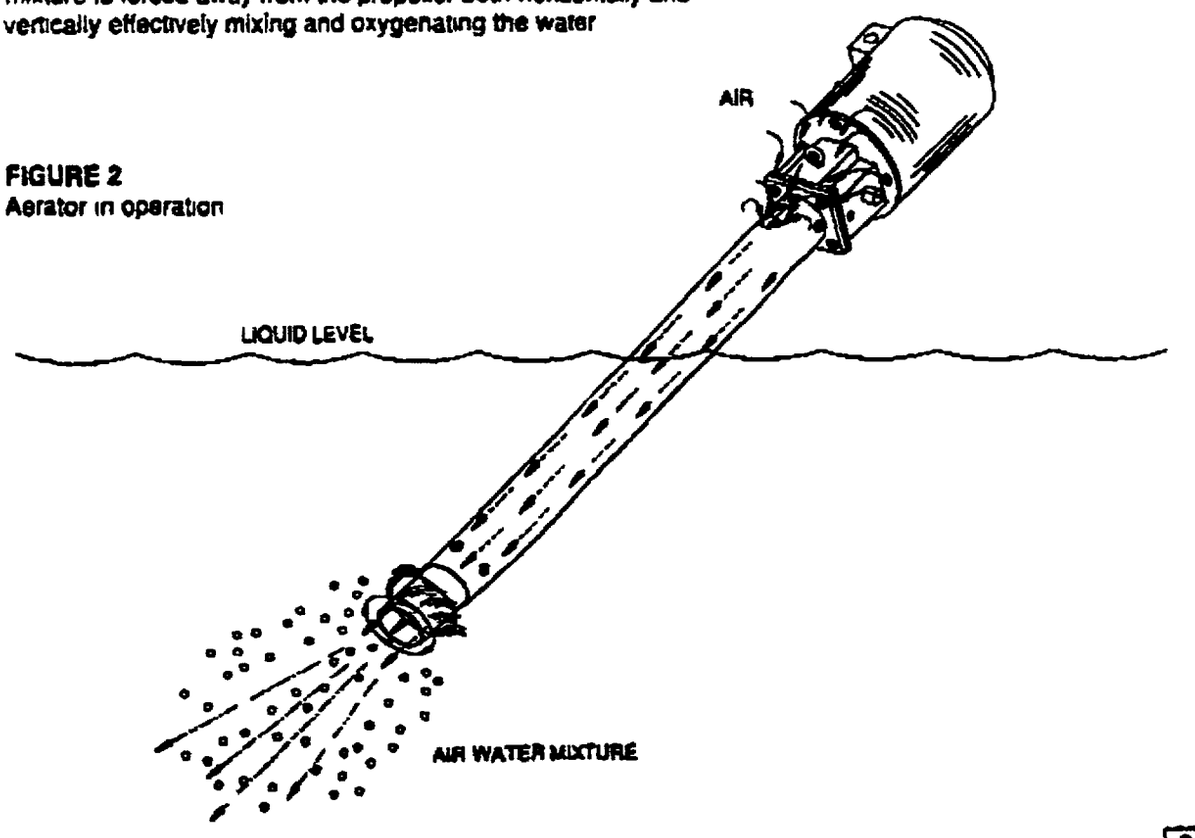

FIGURE 2
Aerator in operation

Low Water Level Legs - Typically used in combination with swing arms, low water level legs (FIGURE 8) allow a pond to be completely emptied with the TORNADO aerator and floats moored in place The legs hold the propeller off the pond floor when there is no water in the pond

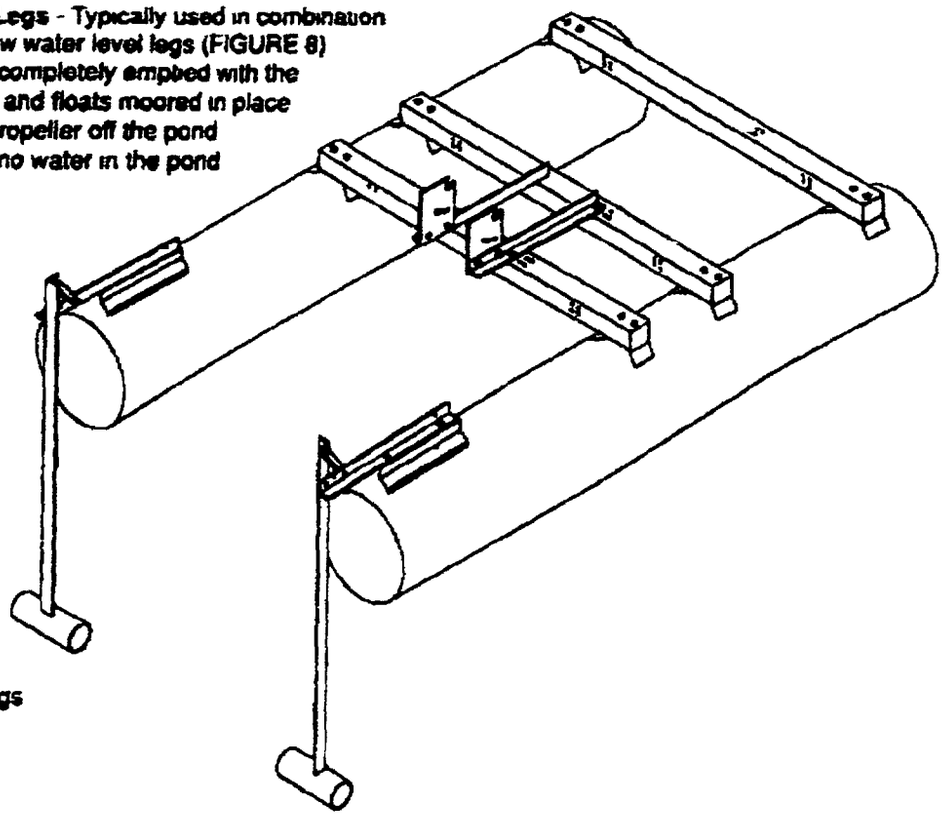

FIGURE 8
Low Water Level Legs

7.0 FLOAT MOORING OPTIONS

A float mooring system is more flexible for positioning aerators than most other mounting systems The most common ways of mooring floats are mooring to posts on shore or mooring to anchors

7.1 MOORING TO SHORE

The TORNADO floats are normally equipped to be moored either perpendicular (mooring option A in FIGURE 9) or parallel (mooring option B in FIGURE 9) to the mooring cable Special modifications can be made to allow the floats to be mounted at different angles Size the mooring cable per motor horsepower by using the chart in Appendix B Appendix B also provides the maximum cable length and maximum unsupported distance for different cable sizes.

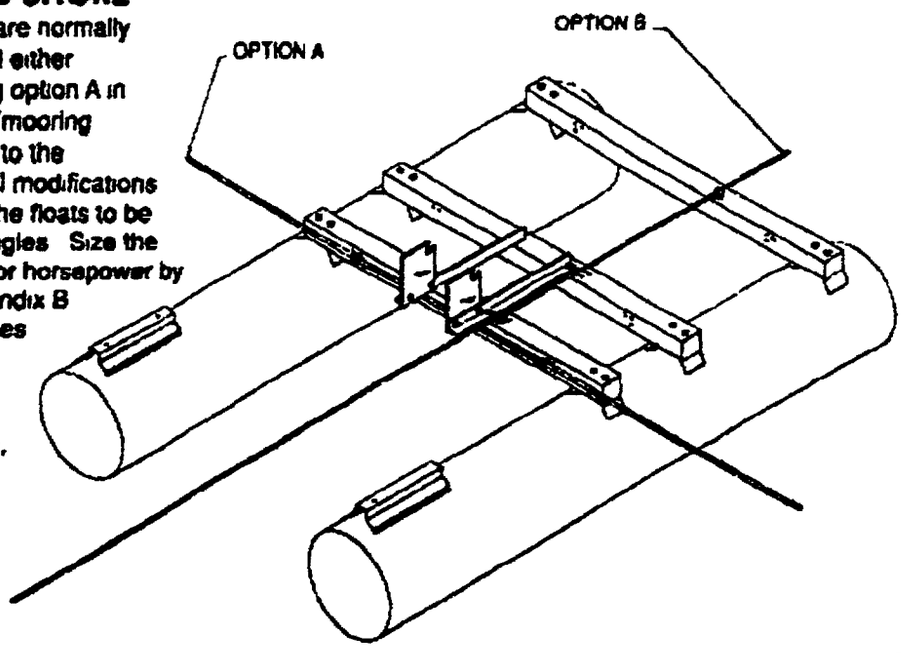

FIGURE 9
Mooring Options

801

6.2 FLOAT ACCESSORIES

Vortex Shield - Excessive vortexing will not normally occur with the TORNADO when operated under ordinary conditions and when tipped into the water at a 45 degree angle In situations where vortexing does occur an optional vortex shield (FIGURE 6) is available

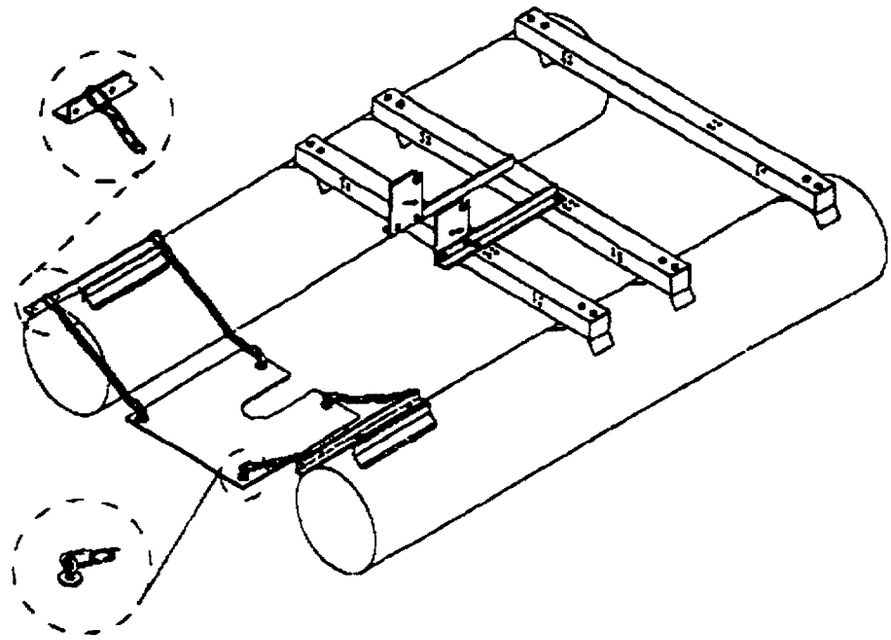

FIGURE 6
Float with Optional Vortex Shield

Swing Arms - Swing arms (FIGURE 7) are needed whenever water levels fluctuate beyond the limits of the mooring cable Floats with swing arms can only be moored perpendicular to the cable

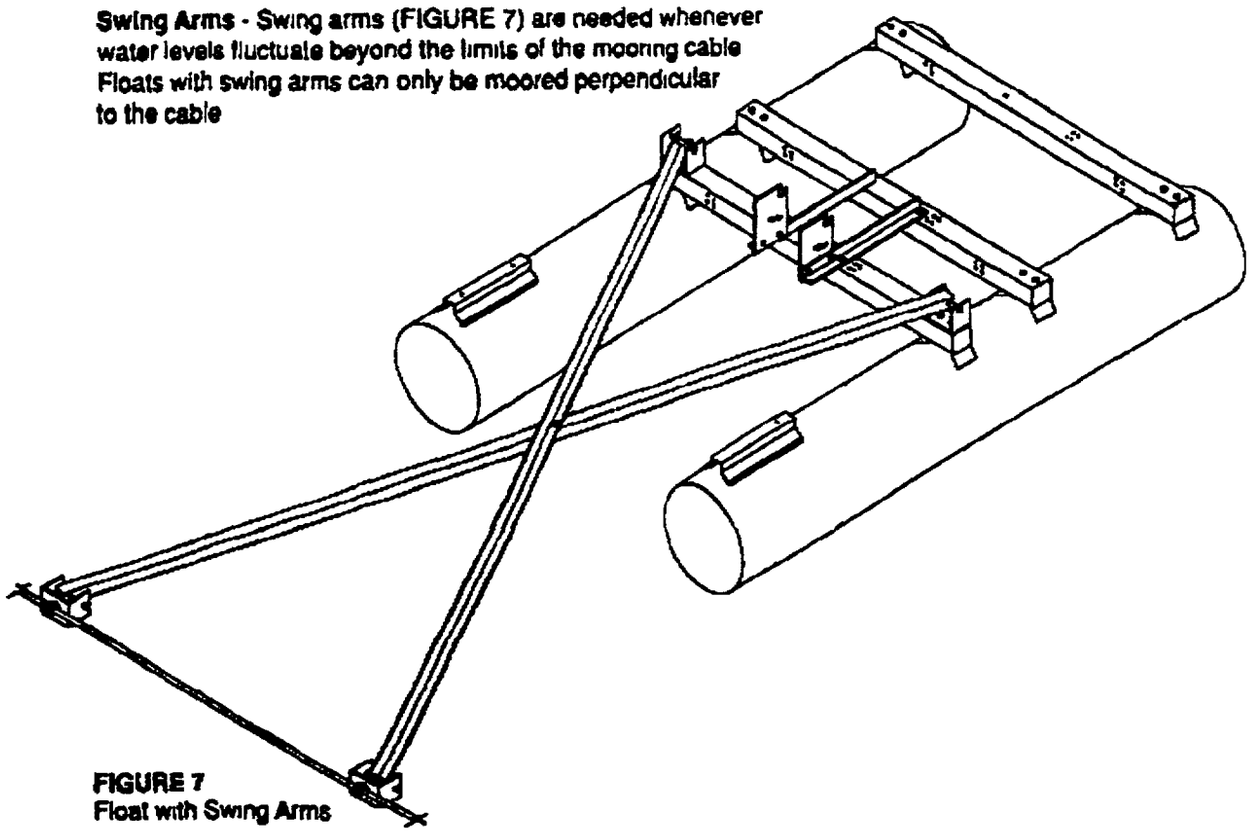

FIGURE 7
Float with Swing Arms