PN-ACE-736
101035

The Hashemite Kingdom of Jordan

Ministry of Water and Irrigation

Water Quality Improvement and Conservation Project

Report 3114-95-2b-42

Feasibility Study:

Jordan Petroleum Refinery Company

Harza Environmental Services, Inc.

Development Alternatives, Inc.

The Technical Assistance Team Includes

Development Alternatives, Inc
Science Applications International Corp
Harza Environmental Services, Inc
Development Associates, Inc

USAID

United States Agency for International Development
Contract No 278-0288-00-C-4026-00

October 1995

BEST AVAILABLE COPY

A

PN-ACE-736

FEASIBILITY STUDY FOR JORDAN PETROLEUM REFINERY COMPANY

JORDAN

Submitted to:
United States Agency
For International Development

Submitted by
Development Alternatives, Inc.

Prepared for
Amman Chamber of Industry, Jordan
Ministry of Water and Irrigation, Jordan

Prepared by
Harza Consulting Engineers and Scientists
Chicago, Illinois, USA
in association with
Royal Scientific Society
Amman, Jordan

B

PREFACE/ACKNOWLEDGMENTS

This report is the result of a feasibility study performed for the Jordan Petroleum Refiner Company in Jordan The purpose of the study was to evaluate technical and economical feasibilities of the pollution prevention/waste minimization (PP/WM) and water conservation techniques recommended in Audit Report #3114-94-2b-26 dated March 1995

Several individuals on the Water Quality Improvement and Conservation Project contributed to this report Dr Usama Mudallal of the Amman Chamber of Industry (Chamber) Engineer Rania Abdel Khaleq of the Ministry of Water and Irrigation (MWI),, and Dr Omar Jabay and Eng Hashim Beano of the Royal Scientific Society of Amman plant managerial and technical staff including Mr Mohammed Khalifeh, General Manager and Eng Abdul Kareem Alwana Engineer, shared their knowledge with Mr Krishna Mayenkar of Harza Consulting Engineers and Scientists (Harza) Chicago, Illinois, USA These technical staff worked under the direction of Dr Shawn R Niaki P E Pollution Prevention Program Director of Harza who heads the WQIC component under which the study was housed It is from their combined expertise that this report was possible

Special appreciation is given to Dr Mohammed Bani Hani Secretary General of MWI Eng Koussai Quteishat Secretary General of the Water Authority of Jordan (WAJ) Mr Khaldun Abuhassan, Chairman of the Chamber, Mr Walid Al-Khathib Director General of the Chamber Dr Muwaffaq Saqqar, Project Coordinator from MWI the members of the PP/WM working group from WAJ including Eng Abdul Wahab Matar Eng Marwan Al-Tal, Eng Mohamad Lafi and to Development Alternatives Inc , as represented by Edwin D Stains Chief of Party, for their cooperation and confidence

TABLE OF CONTENTS

1 0	INTRODUCTION	1
	1 1 Background	1
	1 2 Objectives	1
	1 3 Report Organization	1
2 0	SUMMARY OF AUDIT FINDINGS	3
	2 1 Process and Facility Description	3
	2 2 Audit Findings	4
	2 2 1 Water Usage	4
	2 2 2 Wastewater Sources	5
	2 3 Audit Conclusions	5
3 0	FEASIBILITY STUDY PROCESS	7
4 0	TECHNICAL FEASIBILITY EVALUATION	8
	4 1 Existing Industrial Wastewater Treatment Plant	8
	4 1 1 Description	8
	4 1 2 Potential Treatment Plant Improvements	9
	4 2 Technical Evaluation of Wastewater Reuse	11
	4 2 1 Reuse as Boiler Feed Water	11
	4 2 2 Reuse as Cooling Tower Makeup Water	13
5 0	OPPORTUNITY COST/BENEFIT ANALYSIS	16
	5 1 Economical Cost/Benefit Evaluation	16
	5 1 1 Cost and Benefit of Alternative 1	16
	5 1 2 Cost and Benefit of Alternative 2	16
	5 1 3 Cost/Benefit Analysis	17
	5 2 Environmental Cost/Benefit Evaluation	18
6 0	CONCLUSIONS AND RECOMMENDATIONS	20
	6 1 Conclusions	20
	6 2 Recommendations	20

APPENDICES

Appendix A Screening of Alternatives

TABLES

Table 1 JPRC Water Consumption and Potential Water Conservation
Table 2 Comparison of JPRC Industrial Wastewater Treatment Plant Effluent Quality and Jordanian Regulatory Limits
Table 3 Quality of Raw Well Water
Table 4 Comparison of Basic Requirements for Each Reuse Option
Table 5 Cost Estimate for Reuse as Cooling Water
Table 6 Economic Analysis

FIGURES

Figure 1 Block Flow Diagram for JPRC Processes
Figure 2 Overall Water Balance
Figure 3 Water Balance with Recycle and Reuse
Figure 4 Industrial Wastewater Treatment Plant
Figure 5 Conceptual Drawing for Reuse as Boiler Water
Figure 6 Layout for Reuse as Boiler Water
Figure 7 Conceptual Drawing for Reuse as Cooling Water
Figure 8 Layout for Reuse as Cooling Water
Figure 9 Conceptual Drawings for Reverse Osmosis at Cooling Towers

1 0 INTRODUCTION

This report presents feasibility studies (FS) for pollution prevention and waste minimization (PP/WM) and water conservation for the Jordan Petroleum Refinery Company (JPRC) The report is divided into findings and recommendations from the audit, screening process, feasibility analyses, and final conclusions and recommendations

1 1 Background

Development Alternatives, Inc (DAI) under Contract No 278-0288-00-C-4026-00 with the United States Agency for International Development (USAID) is performing an Industrial Wastewater Discharge Prevention Program (IWDPP) in Amman, Jordan This Program is one of four components of the Water Quality Improvement and Conservation Project (WQICP) funded by USAID This program is being performed by DAI with full coordination between the Ministry of Water and Irrigation (MWI) and the Amman Chamber of Industry (Chamber) Harza Consulting Engineers and Scientists (Harza), Chicago, United States (U S), was retained by DAI to lead the IWDPP The Royal Scientific Society (RSS) of Amman, Jordan was selected as a local consultant to assist Harza with the IWDPP This Program includes conducting the PP/WM audits, feasibility studies, and designing demonstration facilities at selected industrial facilities

The PP/WM techniques are defined as any techniques to prevent or reduce waste generation by source reduction or recycling activities These activities must reduce either the volumes or the concentrations of pollutants generated prior to treatment, storage, or disposal of the waste

Based on a ranking methodology, the PP/WM Committee selected ten industries with potential needs for PP/WM audits, as the first step of the IWDPP The purpose of the audits was to assist the industries in the Amman-Zarqa Basin in assessing pollution problems and developing alternative solutions to achieve desired levels of PP/WM and water conservation appropriate for the selected industry The next step in the IWDPP is to further develop the most promising options for PP/WM revealed through the audit process by performing a FS This report provides the FS for wastewater treatment and reuse at JPRC

1.2 Objectives

The objective of the FS is to evaluate the technical, financial, and logistical feasibility of the most promising PP/WM and water conservation techniques identified in the Audit Report, previously prepared for JPRC

1.3 Report Organization

This report contains an introduction, a summary of audit findings and recommendations (from the previous PP/WM Audit Report), a screening of recommendations, the feasibility analysis of

the selected alternative, and conclusions and recommendations

2 0 SUMMARY OF AUDIT FINDINGS AND RECOMMENDATIONS

2 1 Process and Facility Description

The JPRC began operation in 1960 The JPRC's crude processing capacity is 14,000 t/day (100,000 bbl/day), however the facility is currently operating at about 70 percent capacity, or 10,000 t/day (70,000 bbl/day) Desalted crude oil obtained from neighboring Iraq is transported to the refinery by trucks

The JPRC produces the following products

- Gasoline (leaded),
- Kerosene,
- Diesel fuel,
- Fuel oil,
- Aviation fuel (Avtag and Avtur),
- Liquified Petroleum Gas (LPG),
- Asphalt, and
- Other oil products, such as lube oil

JPRC facilities are located on 420 hectares and include processing and production facilities, product receiving and distributing areas, tank farms, employee housing and large areas of forest All of the water needs for the JPRC are satisfied by groundwater (6 000 m^3/day) obtained from an underlying aquifer Most of JPRC wastewater (4,500 m^3/day) and sludges are disposed directly on the refinery grounds Some domestic wastewater is pumped to the As Samra Wastewater Treatment Plant, which is located approximately 5 km to the northwest

The JPRC facilities can be grouped in the following general categories

- Refining Processes,
- Ancillary Operations, and
- Utility Operations

Facility descriptions for each of these areas are provided below

Refining Processes

A block flow diagram for the JPRC refining process is presented in ***Figure 1***, including

- Atmospheric Distillation,
- Vacuum Distillation,
- Naphtha Hydrotreating,

- Platforming,
- LPG Recovery,
- Fluid Catalytic Cracking (FCC),
- Hydrogen Production
- Hydrocracking
- Asphalt Units and
- Chemical Treatment (Merox and TEL Units)

Ancillary Operations

Ancillary operations include the following non-refining manufacturing facilities

- Lube Oil Blending Plant,
- Drum Manufacturing Plant,
- LPG Cylinder Manufacturing Plant,
- Underground Storage Tank Manufacturing Plant, and
- Loading and Shipping Facilities

Utility Operations

Utility operations are those required to support the main production processes Utility operations at JPRC include the following

- Water Treatment,
- Steam Production,
- Power Generation, and
- Cooling Operations

2 2 Audit Findings

2 2 1 Water Usage

Current water consumption at JPRC is approximately 250 m^3/h Water consumption at JPRC can be divided into three main categories

- Process water (101 m^3/h),
- Cooling water (120 m^3/h), and
- Domestic water (29 m^3/h)

A conceptual water balance schematic for JPRC is provided in ***Figure 2***, and current fresh water consumption is summarized in ***Table 1***

2 2 2 Wastewater Sources

Final wastewater discharges from the JPRC facility are

- Municipal sewer (to As Samra wastewater treatment plant)
- On-site irrigation, and
- Evaporation

An estimated wastewater discharge of 4 m^3/h goes to the As Samra wastewater treatment plant This wastewater is previously treated to some degree by an on-site cesspool system

Approximately 171 m^3/h of wastewater is discharged to irrigation, either directly or after treatment at the on-site domestic or industrial wastewater treatment facilities The domestic wastewater treatment plant consists of a settling tank and chlorination facility The industrial wastewater treatment plant consists of an API separator, two parallel flotation units, stabilization ponds, and sludge ponds

Approximately 75 m^3/h of wastewater is lost due to evaporation and infiltration Most of this water (60 m^3/h) is evaporative losses from the cooling towers, while the remaining 15 m^3/h is lost through steam leaks, garden irrigation in residential areas, and general evaporative losses throughout the plant process areas

2.3 Audit Conclusions

Several PP/WM opportunities exist at the JPRC facility By implementing the following measures, total water usage can be reduced to 85 m^3/h (66 percent reduction) and fresh water usage can be reduced to 30 m^3/h (92 percent reduction) ***Figure 3*** and ***Table 1*** present the proposed water balance

- Cooling water can be eliminated by replacing the existing wet evaporation cooling system with and air cooling system,

- Process wastewater treatment can be upgraded by addition of filtration, steam stripping, and carbon adsorption to allow recycling back to the RO unit The volume of wastewater can be reduced through better management practices,

- Domestic wastewater effluent quality can be improved by providing biological treatment followed by filtration and carbon adsorption,

- Washdowns, spills and leaks can be substantially reduced through improved housekeeping and planned water management,

- Chemical use in the sour water stripper can be reduced by sparging catalytic cracker flue gas through spent caustic,
- The RO reject wastewater volume can be reduced through process optimization and alternative technology implementation, and
- Concentrated brine can be contained and subjected to on-site evaporation, eliminating off-site discharge

3 0 FEASIBILITY STUDY PROCESS

The recommendations provided in the Audit Report were screened to provide a reduced list of the most promising alternatives for PP/WM, for subsequent detailed analyses in feasibility studies The recommendations of the audit report and the screening rationale applied to each is provided in ***Appendix A***

The evaluation of Technical Feasibility of the selected option is provided in Section 4 0, in which available technology and site specific constraints at JPRC are taken into account Section 5 0 provides an Opportunity Cost/Benefit Analysis, and Section 6 0 provides Conclusions and Recommendations

A major area of opportunity for PP/WM and water conservation at JPRC is the treatment and reuse of effluent from the industrial wastewater treatment plant It was originally proposed in the Audit Report that this effluent, which currently is discharged to irrigation, be treated for reuse as process water However, an additional potential area for reuse is for makeup water for the cooling towers This option was not included in the Audit Report since the report recommended replacing the existing wet cooling system with a dry air cooling system, which requires no water Since subsequent comments by JPRC staff indicate that air cooling has limited potential due to high ambient temperatures, the wet cooling system will continue as a major area of water use and a potential area for wastewater reuse Therefore, the feasibility of reusing industrial wastewater treatment plant effluent for cooling tower makeup water will also be considered in the FS

Based on the above discussion, the alternatives assessed in the feasibility study for JPRC are the following

FS Alternative 1 Reuse of the industrial wastewater treatment plant effluent as boiler feed water

FS Alternative 2 Reuse of the industrial wastewater treatment plant effluent as cooling tower makeup water

4 0 TECHNICAL FEASIBILITY EVALUATION

In this section the technical feasibilit of reusing the industrial wastewater treatment plant effluent will be evaluated discussed prior to the analysis of the reuse options

4 1 Existing Industrial Wastewater Treatment Plant

Since the water quality from the existing industrial wastewater treatment plant is of great significance for both proposed alternatives, a brief discussion of the existing industrial wastewater treatment plant is provided

4 1 1 Description

The industrial wastewater treatment plant was constructed in 1980 and consists of the following unit operations and processes

- Sour Water Stripper,
- API separator,
- Dissolved Air Flotation,
- Stabilization and Sedimentation Ponds

A schematic of the treatment facilities is shown in ***Figure 4***

A wastewater flowrate of approximately 70 m^3/h (69 m^3/h) was estimated by Harza in the Audit Report for the industrial wastewater treatment plant Subsequent comments by JPRC staff indicated a somewhat lower estimated flowrate A measurement program is required to better define the flows from the industrial and domestic wastewater treatment plants, however, for consistency in this feasibility study the rates developed in the Audit Report were used as the basis

The API separator of the industrial wastewater treatment plant receives the following oily streams

- Effluents from sour water strippers
- Water effluent from oil vessels
- Rinsing water and storm water from paved process areas
- Oil/water mixture from 3 oil separators (on storm water system)

There are two parallel API units each with a design capacity of 138 m^3/h, which are operated one at a time The oil phase is skimmed from the surface and returned to the refinery, an intermediate sludge phase is disposed of in a sludge pond while the water phase is passed on to two parallel flocculators and dissolved air flotation units The flocculators feed alum and polyelectrolyte Oil and suspended matter is removed in the

air flotation tanks Approximately 50% of the flotation unit effluent is sent to an air saturator and returned to the bottom of the flotation tank to generate air bubbles Sludge generated is pumped to a sludge tank and then to a sludge pond for disposal

The effluent of the flotation units is sent to two sequential lagoons The first lagoon is aerated by floating aerators and has a volume of 7,500 m^3, and surface area of 3 560 m^2 The second lagoon is for settling and polishing, and has the same volume and surface area as the first but is not aerated The ponds are designed for a peak flow of 80 m^3/h and an average flow of 1 200 m^3/day The current average day flow is 1,660 m^3/day The effluent from the second lagoon is discharged to the irrigation pit pump station where it is combined with non-oily wastewaters (boiler and cooling tower blowdowns, RO reject, and IX regenerant), and pumped to a high reservoir for use as fire water and irrigation
Water quality parameters for the industrial wastewater treatment plant effluent are provided in ***Table 2*** For reference, raw well water quality is provided in Table 3 It is noted that the TDS of the wastewater treatment plant effluent (from Table, 2,800 mg/l) is only slightly higher than the TDS of the raw well water (from Table 3, the EC varies from 2,260 to 3,600 μS/cm, equivalent to 1,610 to 2,570 mg/l, using EC TDS=1 4 per RSS Quality Manual)

4 1 2 Potential Treatment Plant Improvements

The existing industrial wastewater treatment plant was recently the object of a comprehensive study to identify improvements required to optimize performance and bring the plant effluent into regulatory compliance The following measures for treatment plant improvements were identified (Industrial Pollution Control Project draft final report prepared by COWIconsult, June 1994)·

Sour Water Strippers The JPRC has two sour water strippers and old stripper and a new stripper The old stripper is being run above design loadings and has low NH_3 removal efficiency The new stripper performs better than the old one, but still is not effectively removing NH_3 It was recommended to modify the operation of caustic injection to achieve an outlet pH of at least 10 5 Improvements include

- Improved caustic dosage system for the old and new strippers by addition of 2 metering pumps, with provision of an injection point for the old stripper,
- Replace existing pumps,
- Replace or clean existing stripper packing

These improvements are expected to reduce ammonia concentrations in the stripper effluent much more effectively

By maximizing the sour water stripper performance, the concentration of ammonia in the wastewater effluent is expected to be reduced from 21 mg/l (*Table 2*) to well below 10 mg/l (*Table 3*)

Flotation Units The flotation unit reportedly has some operating problems The flocculation process is sensitive to pH and there have been problems with the pH sensors in the flotation unit Sometimes caustic wastes are discharged into the sewer, resulting in the upset of the system and the pass through of oil

Based on the COWI consult, the overcoming the following problems should bring the hydrocarbon contents in the effluent down to below 5 ppm

- The recirculation rate of treated water with dissolved air is on the high side (increasing the chemical consumptions)
- At the same time, the pressure used in the saturator is rather much on the low side 67 bar would be preferable
- The agitation in the second flocculation chamber is much too fast, not letting the alumina flocks develop sufficiently
- The injection point for the recirculation water with dissolved air is not optimal The depressurization should be inserted directly in the center of the flotation chamber - and not over a valve in a line leading to subsequent mixing with the wastewater feed to the flotation chamber
- There is practically no possiblity for control As a minimum the chemical dosage should automatically be proportional to the wastewater flow
- Provision of the necessary chemicals should be assured at all times

Aerated Lagoons Two of the three aerators of the aerated lagoons were reportedly inoperative The previous report recommends that phosphorous be added to the wastewater to improve the nutrient balance and that the aerators be repaired or replaced Testing performed by COWIconsult indicates that the effluent from the polishing pond is worse than the influent into the aeration lagoons This may indicate that the sludge storage capacity of the polishing pond

has been exceeded and requires dredging

As an addition to the current system at JPRC, it is recommended that the domestic wastewater be routed to the aeration lagoons This will increase the amount of water available for reuse and additionally will improve the nutrient balance of the ponds which was found in a previous report by COWIconsult to be deficient in phosphorus The approximate flows from the treatment plant will increase from approximately 70 m^3/h to 90 m^3/h (or from 50 m^3/h to 60 m^3/h if PP/WM measures are implemented as described in the Audit Report presented by Harza)

Both of the FS alternatives evaluated in this report require prior implementation of the above improvements The cost of implementation is taken from the COWIconsult report It is noted, however, that in the cost/benefit analysis this cost is not included, since it considered a "sunken cost" in which JPRC must incur to achieve regulatory compleance For similar reasons, the operation and maintenance cost of the existing plant are also not considered in the cost/benefit analysis

4 2 Technical Evaluation of Wastewater Reuse

A major area of opportunity for PP/WM and water conservation at JPRC is the treatment and reuse of effluent from the industrial wastewater treatment plant Two options for reusing the treated wastewater will be evaluated These options are

1 Reuse as boiler feed water, and
2 Reuse as cooling tower makeup water

Discussion concerning the technical feasibility of these two options is presented below All discussion to follow is based on the predicted flow rate of 60 m^3/h reused from the industrial wastewater treatment plant This value reflects the implementation of the PP/WM recommendations from the Audit Report prepared by Harza, which will reduce the industrial wastewater flow to approximately 50 m^3/h The additional 10 m^3/h is a result of combining the domestic wastewater to the aeration lagoons

4.2 1 Reuse as Boiler Feed Water

Under this alternative, the industrial wastewater treatment plant is upgraded by adding the following to achieve effluent quality appropriate for use at the existing RO/IX water treatment plant (***Figure 5***)

- Air stripping,
- Filtration, and
- Carbon adsorption

Table 3 presents the raw water quality In the discussion below, the proposed system will be evaluated based on the ability to return the quality to that of the raw water prior to the RO and IX units

Currently approximately 72 m^3/h of fresh water is used to feed the RO/IX plant Therefore the entire 60 m^3/h of effluent produced by the industrial wastewater treatment plant could be treated and reused to replace fresh water at the RO/IX plant Since the amount of water potentially available from the industrial wastewater treatment plant is less than the required amount of RO/IX water, the existing supply connection from groundwater wells must be maintained By maintaining the existing connection the groundwater can also serve as a backup water supply and/or as blending water

The JPRC staff indicates that a triangular area surrounding the existing industrial wastewater treatment plant is available for additional treatment facilities A layout diagram showing this area and the proposed facility layout is provided in ***Figure 6*** The main components of the system are described below

Air stripping Air stripping is used for removal of up to 99 percent of the BTEX and other volatile hydrocarbons from wastewater From a wetwell at the outlet of the stabilization ponds, the effluent will be pumped to the stripping tower The stripping tower will be approximately 1 meter in diameter and 7 meters high The sour water strippers should provide adequate ammonia removal However, if the ammonia levels are not reduced to below 1 mg/l, an additional air stripper may be needed directly following the sour water strippers To provide a conservative cost estimate, a second air stripper is included Physical specifications of the air stripping unit used for cost estimating purposes are provided in Appendix B

Filtration Following air stripping, the reused wastewater will need to be filtered to remove suspended solids prior to carbon adsorption Two industrial multimedia pressure filters have been selected to perform this function Filtration is expected to reduce the concentration of suspended solids by approximately 90 percent The effluent of the industrial wastewater treatment plant currently contains suspended solids at a concentration of 33 mg/l (***Table 2***), and the raw well water contains 8 mg/l suspended solids Therefore, with the addition of filtration, the suspended solids levels will be reduced to less than 5 mg/l, which is suitable for feed to the carbon adsorption and existing RO/IX system

Each filter will have a volume of approximately 8 5 m^3 This size gives each of the filters enough capacity to treat the entire flow of 60 m^3/h in the event of one of the filters being taken off line for backwashing or other upsets An elevated backwash storage tank will also need to be built with a capacity of approximately 50 m^3 The backwash water will be sent back to the industrial wastewater treatment plant

Physical specifications of the filter unit used for cost estimating purposes are provided in Appendix B

Carbon adsorption The last stage of treatment before the wastewater can be sent back to the RO/IX units is carbon adsorption Carbon adsorption is used in order to remove any residual petroleum hydrocarbons and organics in the wastewater that passed through the air stripping Like the multimedia filters, two carbon adsorption units will be set up in series with the option to run the entire flow through either unit in the case of carbon replacement

Physical specifications of the carbon adsorption unit used for cost estimating purposes are provided in Appendix B

Other Improvements In order to install the treatment units listed above, other improvements needed, are as follows

- Modify the existing line between the pond intake and irrigation pit by adding a wetwell and providing 2 pumps to send the water to the air stripper
- Install two more pumps after the air stripper to provide enough head to get the water through the remaining filters and carbon adsorption units and to the RO/IX plant
- Piping will also need to be modified to implement these changes

Currently, the well water is chemically preconditioned to provide boiler feed-grade water following RO and IX It is assumed that some additional preconditioning may be required for the treated effluent However, this must be determined based on pilot tests of treatment performance These tests will also provide information regarding potential effects of water quality on RO performance and boiler operation

4 2 2 Reuse as Cooling Tower Makeup Water

The water used for cooling purposes does not have to be nearly as clean as boiler makeup water Therefore, in order to reuse the industrial wastewater treatment effluent as cooling tower makeup water, improvements to the treatment plant, as previously discussed, should be combined with additional filtration equipment to produce water of suitable quality (**Figure 7**) Additional water conservation can be achieved by treating the cooling makeup water by RO, although this implies a significant cost The addition of RO will be assessed independantly within this FS alternative

Approximately 120 m^3/h of fresh water is currently used as cooling makeup water Therefore all of the expected 60 m^3/h produced by the industrial wastewater treatment plant could be treated and reused for this purpose However, as discussed above, it is recommended that the existing supply connection from groundwater wells be maintained for use as backup supply or blending water

The existing cooling system consists of three closed loop systems which are used for cooling of overhead products and for cooling of overheads from distillation columns in the older parts of the refinery Each cooling circuit has its own cooling tower The cooling process results in a 50 percent loss of cooling tower makeup water through evaporation The remaining 50 percent of water use is rejected as saline blowdown with a specific conductance of 4,000 to 5,000 μS/cm Biological inhibitors including chlorine formulations are added to the makeup water to prevent biological growth in the cooling towers and receiving trays

JPRC staff indicates that a triangular area surrounding the existing industrial wastewater treatment plant is available for additional treatment facilities A layout diagram showing this area and the proposed facility layout is provided in ***Figure 8*** The components of the proposed system are discussed in more detail below

Filtration The reused wastewater will need to be filtered to remove suspended solids From a wetwell at the outlet of the stabilization ponds, the effluent will be pumped to two industrial multi-media pressure filters selected to perform this function Filtration is expected to reduce the concentration of suspended solids by approximately 90 percent The effluent of the industrial wastewater treatment plant currently contains suspended solids at a concentration of 33 mg/l (***Table 2***), and the raw well water contains 8 mg/l suspended solids Therefore, with the addition of filtration, suspended solids levels will be reduced to meet cooling tower makeup requirements

Each filter will have a volume of approximately 8 5 m^3, giving each of the filters enough capacity to treat the entire flow of 60 m^3/h in the event of filter backwashing or other upsets A 50 m^3 elevated backwash storage tank will also be needed for this option Similar to the previous option, the backwash water will be sent back to the industrial wastewater treatment plant

Physical specifications of the filter unit used for cost estimating purposes are provided in Appendix B

RO to increase cooling tower efficiency Currently the cooling towers are operated as a closed loop system with a single cycle the incoming water into the cooling towers flows at 120 m^3/h,of this flow, 60 m^3/h is evaporated, while the remaining 60 m^3/h is discharged as blowdown The concentration of TDS entering the cooling operation is generally between 2,000 and 3,000 μS/cm, and

the blowdown is between 4,000 and 5,000 μS/cm

The concentration of TDS in the reused wastewater is also approximately 2 000 to 3,000 μS/cm Therefore, the same single cycle cooling practice can be continued if reuse is implemented On the other hand increased cycling the cooling water within the cooling system can be accomplished if the water is treated with RO to reduce the TDS (assuming that TDS is the main parameter determining blowdown flowrate)

By setting up an RO system to treat the incoming fresh water from wells and the treated wastewater from the treatment plant, the TDS concentration can be reduced up to 90 percent (typical reduction efficiency for RO units) This reduction in TDS will improve the efficiency of the cooling operation, which will also reduce the need for fresh water at the facility By assuming that the blowdown flowrate is directly related to the incoming TDS concentration, the blowdown flowrate can also be reduced 90 percent (from 60 m^3/h to 6 m^3/h) The improved system will allow for enough recycling so that the amount of water needed at the cooling towers can be reduced by from 120 m^3/h to 22 m^3/h (82 percent reduction) ***Figure 9*** presents a conceptual diagram of this system

RO reject produced at the cooling tower presents a potential environmental liability The optimal means to dispose of the high TDS waste stream is pond evaporation however, JPRC staff indicates there is no room available for such a facility on site Therefore, careful analysis of alternative disposal possibilities must be performed prior to implementation of RO

Other Improvements In order to install the filtration and RO units other improvements will need to be made One improvement will be modifying the existing line between the pond intake and irrigation pit by adding a wetwell and providing 2 pumps to send the water through the filters and to the cooling towers Piping will also need to be modified along this path

It is recommended that pilot scale tests be conducted to determine actual treatment efficiency and potential impacts of water quality on cooling tower operation

5 0 OPPORTUNITY COST/BENEFIT ANALYSIS

5 1 Economical Cost/Benefit Evaluation

Savings in water consumption can provide a significant economic benefit for water reuse measures Currently JPRC must pay JD 0 10 per cubic meter withdrawn from the groundwater wells to the Water Authority of Jordan Additionally, the operation and maintenance costs related to current water pumping practices are estimated at JD0 10 per cubic meter Therefore, the economic evaluation includes this benefit as an offset to capital and operation expenditures The fee at its current level provides a significant economic incentive for water conservation It is probable, however, that the fee will increase as available water supplies become a limiting factor with respect to increasing demands A greater fee obviously will increase the benefits of water conservation, but additionally may have an impact on the selection of the most desireable option This is discussed later in this section

5 1 1 Cost and Benefits of Alternative 1 Wastewater Reuse as Boiler Feed

The components required for this alternative were described in detail in Section 4 0 The costs and benefits are described below

Capital Costs A detailed breakdown of capital costs associated with this alternative is provided in ***Table 4*** The costs associated exclusively with the additional treatment facilities amounts to JD 377,200 The cost of improvements to the existing industrial wastewater treatment plant per COWIconsult is JD 210,000 The total capital cost associated with this alternative is JD 587,200

Operation and Maintenance Costs The main operation and maintenance costs are labor, energy, and equipment maintenance, as shown in ***Table 5*** Labor costs are for one mechanical engineer and three technicians, while energy costs are those associated with the two pumping stations A 5 percent yearly allowance for maintenance is taken on all equipment The total annual operation and maintenance cost is JD 26,300

Benefits As discussed above, the main monetary benefit from implementing this measure is from fresh water substitution Replacing 60 m^3/h of fresh water at a cost savings of JD 0 2 per m^3, and considering 24 hour, 365 day operation at JPCR, the yearly savings amount to JD 105,000

5 1 2 Costs and Benefits of Alternative 2 Wastewater Reuse as Cooling Tower Makeup

As with the previous subsection, the components required for this alternative were described in detail in Section 4 0

Capital Costs A detailed breakdown of capital costs associated with this alternative is provided in ***Table 6*** including both of the following options Without RO and With RO As can be seen, the cost of providing RO for 98 m^3/h is substantial

- Without RO the costs associated exclusively with the additional treatment facilities amounts to JD 152 300 and with an additional JD 210 000 for imprvements to the industrial wastewater treatment plant, the total cost ascends to JD 362,300

- With RO the capital costs of the additional facilities is JD 1,580,300, which together with the JD 210 000 for the existing plant add up to JD 1,790,300

Operation and Maintenance Costs The main operation and maintenance costs are labor, energy, and equipment maintenance, as shown in ***Table 7***

- Without RO labor costs are for one mechanical engineer and one technicians while energy costs are those associated with one pumping station A 5 percent yearly allowance for maintenance is taken on all equipment The total annual operation and maintenance cost is JD 15,000

- With RO labor costs are for one mechanical engineer and three technicians Energy costs are much higher in this case due to the high power consumption of the RO units A 5 percent yearly allowance for maintenance is taken on all equipment, although this amounts to a much higher figure than in the previous case, due to the large amounts of capital involved An additional cost which has not been included is the RO reject disposal cost This could have a significant impact if on-site disposal is not possible The total annual operation and maintenance cost is JD 95,900

Benefits As discussed above, the main monetary benefit from implementing this measure is from fresh water substitution Replacing 98 m^3/h of fresh water at a cost savings of JD 0 2 per m^3, and considering 24 hour 365 day operation at JPCR the yearly savings amount to JD 172,000

5.1 3 Cost/Benefit Analysis

A cost/benefit analysis summarizing costs, benefits, payback period, and present worth

is provided in ***Table 8*** for both FS alternatives including the two options for Alternative 2 (without RO and with RO) As mentioned previously the capital costs exclude upgrading the industrial wastewater tretament plant although this is required in order to implement any of the alternatives because it is considered a sunken cost The paybakc period and present worth for both alternatives are discussed below

Payback Period The payback period is taken as the number of years required for the net benefits to pay for the capital cost, disregarding the time value of money This is arithmetically equal to the capital cost divided by the difference between the yearly benefits (Annual Water Savings) and the yearly costs (Annual Operation and Maintenance Cost) The alternative with the shorter payback period is the more economically feasible It can be seen that for Alternative 1 the payback period is fairly short approximately 5 years For Alternative 2, the payback period is 2 years Without RO and approximately 21 years for the option With RO

Present Worth The present worth is the amount of money in present day dollars obtained over the lifespan of a project which in this case is taken as a 20 year period The alternative with a greater present worth is more economically feasible It can be seen from ***Table 8*** that the present worth of Alternative 1 is JD 526 600, while for Alternative 2 Without RO it is 881 100 and With RO negative JD 710,900 The negative present value indicates a net loss over the life of the investment

From the above analysis shows that Altrernative 2 Without RO is the most economically feasible option It requires the lowest initial capital investment, it has the lowest operation and maintenance cost and the payback period is the least and present worth is the highest

It is interesting to note that Alternative 2 With RO conserves a greater amount of water than the other options and therefore, all else remaining equal higher water fees make it more attractive It is important to mention, however, that the fee must increase over threefold (from JD 0 2/m^3 to approximately JD 0 6/m^3) before the present value of Alternative 1 With RO exceeds that Without RO Also interesting to note, however, is that all else remaining equal, increasing energy costs will tend to make this option less attractive than the others

5 2 Environmental Cost/Benefit Evaluation

Definite environmental benefits will result from reusing the industrial wastewater treatment plant effluent These benefits include

Water conservation The amount of water conserved by reusing the wastewater as boiler feed is 60 m^3/h which is the total flow through he industrial wastewater treatment plant after domestic wastewater is added to the aeration lagoons and PP/WM measures, which can potentially eliminate the need for fresh water in the cooling process

Pollution reduction The pollution load discharged to the sewers and to irrigation can be reduced by implementing the proposed treatment and reuse options together with proper disposal of treatment waste streams The results will be groundwater protection and a decreased load at the As Samra treatment plant

Both of the systems proposed for reuse of the wastewater as boiler feed and as cooling water meet the requirements for reliability, implementability, and regulatory acceptance

6 0 CONCLUSIONS AND RECOMMENDATIONS

6 1 Conclusions

Water conservation will be effectively achieved by treating and reusing the treated wastewater from the existing facility The pollution load discharged to the sewers and to irrigation can also be reduced by implementing the proposed treatment and reuse options The results will be groundwater protection and a decreased load at the As Samra wastewater treatment plant

Both of the alternatives for reusing the treated wastewater can save JPRC significant amounts of water Presently, all of the water used at the facility comes from groundwater wells Therefore, with the implementation of either of the proposed options for water reuse discussed in this report, the raw water consumed will be reduced by an amount proportional to the flow reused As an additional measure to reduce water at JPRC, the use of RO on a recycle line of the cooling operations was evaluated This measure, combined with reuse of the treated wastewater can potentially eliminate much of the need of fresh water for the cooling process Since both of the options evaluated were shown to be technically feasible the most cost efficient of the two alternatives was selected

6 2 Recommendations

Based on capital costs required for each of the alternatives, and the amount of money saved as a result of water conservation, reusing the water for cooling operations without RO proves to be the more economically feasible option Furthermore the reduction in pollution discharge to the environment, which will result in local groundwater protection, is an added benefit associated with this recommendation Below are the components for the recommended system

1 Upgrade the existing industrial wastewater treatment plant by

- maximizing the sour water stripper performance,
- improving the flotation units, and
- dredging and improving the aeration lagoons

2 Add filtration to remove the suspended solids

3 Reroute the industrial wastewater treatment plant effluent to the cooling towers

TABLES

[redacted]

TABLE 1 JPRC WATER CONSUMPTION AND POTENTIAL WATER CONSERVATION

Water Use Center	Current Fresh Water Consumption (m^3/h)	Proposed Water Consumption (m^3/h)			Comments
		Total Process Consumption	Recycle Potential	Net Fresh Water Consumption	
Process Water	**101**	**65**	**50**	**15**	
Washdowns Cleaning Flushing	49	26	26	0	Use water conservation devices and techniques Treat and recycle to RO
Stripping Steam	15	15	15	0	Treat and recycle to RO
Reverse Osmosis/Ion Exchange	17	10	0	10	Process optimization
Heating Steam Losses	10	5	0	5	Preventive maintenance
Boiler Blowdown	5	5	5	0	Treat and recycle to RO
Ancillary Processes	5	4	4	0	Optimize processes recycle to RO
Cooling Water	**120**	**5**	**5**	**0**	
Evaporation Losses	60	0	Not Applicable	0	Replace wet evaporative cooling with air cooling system
Blowdown	60	0	Not Applicable	0	Replace wet evaporative cooling with air cooling system
Air Cooling Losses	0	5	5	0	Inherent system losses considered
Domestic Uses	**29**	**15**	**0**	**15**	
Residential Area	10	5	0	5	Use meters flow control devices better management
Cafeteria	6	3	0	3	Same as above
Recreation Area	5	3	0	3	Same as above
Ancillary Process Area	4	2	0	2	Same as above
Refinery Process Area	4	2	0	2	Same as above
TOTAL	**250**	**85**	**55**	**30**	

TABLE 2 COMPARISON OF JPRC INDUSTRIAL WASTEWATER TREATMENT PLANT EFFLUENT QUALITY AND JORDANIAN REGULATORY LIMITS

Parameter	Sample Results[2]	Jordanian Regulatory Limits[1]			
		Discharge to Sanitary Sewer	Groundwater Recharge	Reuse for Irrigation	Disposal to Wadis
Biological Oxygen Demand (mg/l)	29	800	50M[3]	-	50M[3]
Chemical Oxygen Demand (mg/l)	60	2 100	150M[3]		150M[3]
Total Suspended Solids (mg/l)	33	1 100	-	100	50
Total Dissolved Solids (mg/l)	2 800		1 500	2 000	3 000
pH	7 9	5 5-9 5	6 5-9 0	6 5-8 4	6 5-9 0
Ammonia (mg/l)	21 0	-	5	5	5
Phosphate (mg/l)	0 42	-		-	15
Cyanide (mg/l)	<0 02	-	0 1	0 1	0 1
Cadmium (mg/l)	0 0	1[4]	0 02	0 01	0 01
Nickel (mg/l)	0 06	4[5]	0 1	0 2	0 2
Lead (mg/l)	0 0	0 65[5]	0 1	1	0 1

1 Jordanian Standards 202
2 Sample collected from JPRC industrial wastewater treatment plant discharge on 11 12/94
3 M = Monthly average
4 ( ) = Not Determined
5 The cumulative total concentration of all noted compounds and Mercury Silver Zinc Copper and Chromium should not exceed 10 mg/l

TABLE 3 QUALITY OF RAW WELL WATER

Parameter (units)	Sample Source[1]		
	Well No 7	Well No 10	Well No 4
pH	7 14	7 41	7 33
Specific Conductance (μS/cm)	3310	2260	3600
Suspended Solids (mg/l)	8	10	14
Chemical Oxygen Demand (mg l)	26	26	74
Total Organic Carbon (mg/l)	3 34	2 11	2 39
K Nitrogen (mg/l)	1 12	1 68	1 96
Ammonia (mg l)	0 38	0 13	0 50
Benzene (μg l)	<0 05	<0 05	<0 05
Ethylbenzene (μg/l)	<0 05	<0 05	<0 05
Toluene (μg l)	<0 05	<0 05	<0 05
Trichloroethylene (μg l)	1 24	4 14	0 22
Tetrachloroethene (μg l)	0 36	0 75	0 12
1 3 Dichlorobenzene (μg/l)	<0 10	<0 10	<0 10
Cyanide (μg l)	<0 02	<0 02	<0 02
Cadmium (μg l)	<0 01	<0 01	0 01
Nickel (μg/l)	0 01	<0 01	<0 04
Lead (μg l)	<0 01	<0 01	<0 01

Samples collected 11 12 94

Table 4
CAPITAL COSTS FOR
ALTERNATIVE 1. WASTEWATER REUSE AS BOILER FEED
Jordan Petroleum Refinery Company

	Item	Cost (JD)
A	Air Stripping (2 counterflow forced draft units 60 m3/h each)	40 000
B	Filtration (2 multimedia pressure filters 60 m3/h each)	55,000
C	Carbon Adsorption (1 two-adsorber unit 10 000 lb 60 m3/h)	62 000
D	Piping To and Within Treatment Unit (100 m 8-inch installed cost)	3 500
E	Piping to RO/IX Plant (700 m 8-inch installed cost)	24,500
F	Housing for Filtration Unit and Controls (7m x 10 m installed cost)	5 600
G	Pumping Station 1 - Pond Outlet (2 wastewater pumps and wet well 60 m3/h each, 20 m head installed cost)	1 300
H	Pumping Station 2 - Air Stripping Outlet (2 wastewater pumps and wet well, 60 m3/h each 50 m head installed cost)	3 500
I	Backwash for Filtration Units (2 pumps and wet well 175 m3/h 30 m head)	6 000
J	**Shipping of Imported Equipment (20% of A,B,C)**	31 400
K	**Installation of Equipment (50% of A,B,C,I)**	81,500
	Subtotal	314 300
L	**Contingency (20%)**	62 900
Subtotal 1		377 200
M	Improvements to Industrial WW Treatment Plant*	
	-Upgrade Sour Water Strippers	140,000
	-Upgrade Flotation Units and Aeration Lagoons	70 000
Subtotal 2		210 000
TOTAL		**587,200**

* Improvements and costs from COWIconsult report 1994

HARZA TAB-REV2 XLS
5581G 10/ 4/95 1 55 PM

Table 5
ANNUAL OPERATION AND MAINTENANCE COSTS FOR ALTERNATIVE 1 WASTEWATER REUSE AS BOILER FEED
Jordan Petroleum Refinery Company

Item	Cost ($JD)
A Labor (1 Mech Eng , 3 Tech)	11 500
B Energy (for Pump Station 1 and 2)	6,400
C Maintenance (5% of Equipment Cost)	8 400
Total	**26,300**

Notes.

A Mechanical Engineer at JD 500/month=6 000/year
Technician at JD 150/month=1 800/year

B Pumping Station 1 at 5 kw*8760 h/year=45 000 kwh/year
Pumping Station 2 at 13 kw*8760 h/year=114 000 kwh/year
Subtotal 158 000 kwh/year
Add 20% for miscellaneous electrical usages
Total=189 600 kwh/year
Energy cost =JD 0 034/kwh
Total Energy Cost=JD 6 400/year

C Equipment Cost Air Stripping Filtration Carbon Adsorption Pumping Stations 1 and 2 and Backwash Pumps

Table 6
CAPITAL COSTS FOR
ALTERNATIVE 2 WASTEWATER REUSE AS COOLING TOWER MAKEUP
Jordan Petroleum Refinery Company

Without RO			With RO		
	Item	Cost (JD)		Item	Cost (JD)
A	Filtration (2 multimedia pressure filters, 60 m3/h each)	55,000	A	Filtration (2 multimedia pressure filters, 60 m3/h each)	55,000
B	Pumping Station - Pond Outlet (2 wastewater pumps and wet well, 60 m3/h each, 70 m head, installed)	1,300	B	Reverse Osmosis (5 units, 25 m3/h each)	700,000
C	Piping To and Within Treatment Unit (100 m, 8-inch, installed)	3,500	C	Pumping Station - Pond Outlet (2 wastewater pumps and wet well 60 m3/h each 70 m head, installed)	1,300
D	Piping to Cooling Towers (400 m, 8-inch, installed)	14,000	D	Piping To and Within Treatment Unit (100 m, 8-inch, installed)	3,500
E	Housing for Filtration Unit and Controls (7m x 10 m, installed)	5 600	E	Piping to Cooling Towers (400 m, 8-inch, installed)	14 000
F	Backwash for Filtration Units (2 wastewater pumps and wet well 175 m3/h, 30 m head)	6,000	F	Housing for Filtration Unit and Controls (7m x 10 m, installed)	5,600
			G	Backwash for Filtration Units (2 wastewater pumps and wet well, 175 m3/h, 30 m head)	6 000
G	**Shipping of Imported Equipment (20% of A)**	11,000	H	**Shipping of Imported Equipment (20% of A,B)**	151,000
H	**Installation of Equipment (50% of A,F)**	30,500	I	**Installation of Equipment (50% of A,B,G)**	380,500
	Subtotal 1	126,900		**Subtotal 1**	1 316,900
I	**Contingency (20%)**	25,400	J	**Contingency (20%)**	263,400
Subtotal 1		152,300	**Subtotal 1**		1 580,300
G	Improvements to Industrial WW Treatment Plant*		K	Improvements to Industrial WW Treatment Plant	
	-Upgrade Sour Water Strippers	140,000		*Upgrade Sour Water Strippers	140 000
	-Upgrade Flotation Units and Aeration Lagoons	70,000		*Upgrade Flotation Units and Aeration Lagoons	70,000
Subtotal 2		210,000	**Subtotal 2**		210,000
TOTAL		**362,300**	**TOTAL**		**1,790,300**

*Improvements and costs from COWIconsult report 1994

Har a TAB4REV2 XLS
10/14/95 2 00 PM

27

Table 7
ANNUAL OPERATION AND MAINTENANCE COSTS FOR ALTERNATIVE 2: WASTEWATER REUSE AS COOLING TOWER MAKEUP
Jordan Petroleum Refinery Company

Without RO		With RO	
Item	Cost (JD)	Item	Cost (JD)
A Labor (1 Mech Eng , 1 Tech)	8 000	A Labor (1 Mech Eng , 3 Tech)	13,000
B Energy (for Pump Station 1)	3,900	B Energy (for Pump Station 1 and RO)	44 500
C Maintenance (5% of Equipment Cost)	3,100	C Maintenance (5% of Equipment Cost)	38 415
		D RO Reject Disposal	-
TOTAL	**15,000**	**TOTAL**	**95,900**

Notes.

A Mechanical Engineer at JD 500/month=6 000/year
Technician at JD 150/month=1 800/year

B Pumping Station 2 at 13 kw*8760h/year=114 000 kwh/year
Total Energy=114 000 kwh/year
Energy cost =JD 0 034/kwh
Total Energy Cost=JD 3 900/year

C Equipment Cost Filtration Pumping Stations 1 and Backwash Pumps

Notes.

A Mechanical Engineer at JD 500/month=6 000/year
Technician at JD 150/month=1 800/year

B Pumping Station 2 at 13 kw*8760 hours/year=114 000 kwh/year
RO at 33 3 kw/unit*4 units=135 kw*8760h/year=1 200 000 kwh/year
Total Energy =1 310 000 kwh/year
Energy cost =JD 0 034/kwh
Total Energy Cost=JD 44 500/year

C Equipment Cost Filtration, RO Pumping Stations 1 and Backwash Pumps

D RO Reject Disposal cost is unknown but potentially may be significant depending on the available acceptable disposal means

Table 8
COST/BENEFIT ANALYSIS OF ALTERNATIVES
Jordan Petroleum Refinery Company

Alternative 1 - Wastewater Reuse as Boiler Feed		Alternative 2 - Wastewater Reuse as Cooling Tower Makeup			
		Without RO		With RO	
Item	Cost (JD)	Item	Cost (JD)	Item	Cost (JD)
Costs		**Costs**		**Costs**	
Initial Capital Cost*	377,200	Initial Capital Cost*	152,300	Initial Capital Cost*	1 580,300
Annual Operation and Maintenance Cost	26,300	Annual Operation and Maintenance Cost	15,000	Annual Operation and Maintenance Cost	95,900
Benefits		**Benefits**		**Benefits**	
Annual Water Savings (60 m3/h at 0 2 JD/m3)	105,100	Annual Water Savings (60 m3/h at 0 2 JD/m3)	105 100	Annual Water Savings (98 m3/h at 0 2 JD/m3)	171 700
Payback Period (years)	4 8	**Payback Period (years)**	1 7	**Payback Period (years)**	20 8
Present Worth (for 20 year life)**	526,600	**Present Worth (for 20 year life)****	881 100	**Present Worth (for 20 year life)****	

Notes

*Capital costs for upgrading existing industrial wastewater treatment plant and its Operation and Maintenance (O&M) costs are not included in the above analysis since the improvement should be implemented and O&M costs will be incurred irrespective of the proposed water conservation measures

**Based on Annual Interest Rate of 6 0%

Harza TAB-RLV2.XLS
10/14/05 1 :6 PM

FIGURES

\proposal\jordan\b flow cdr

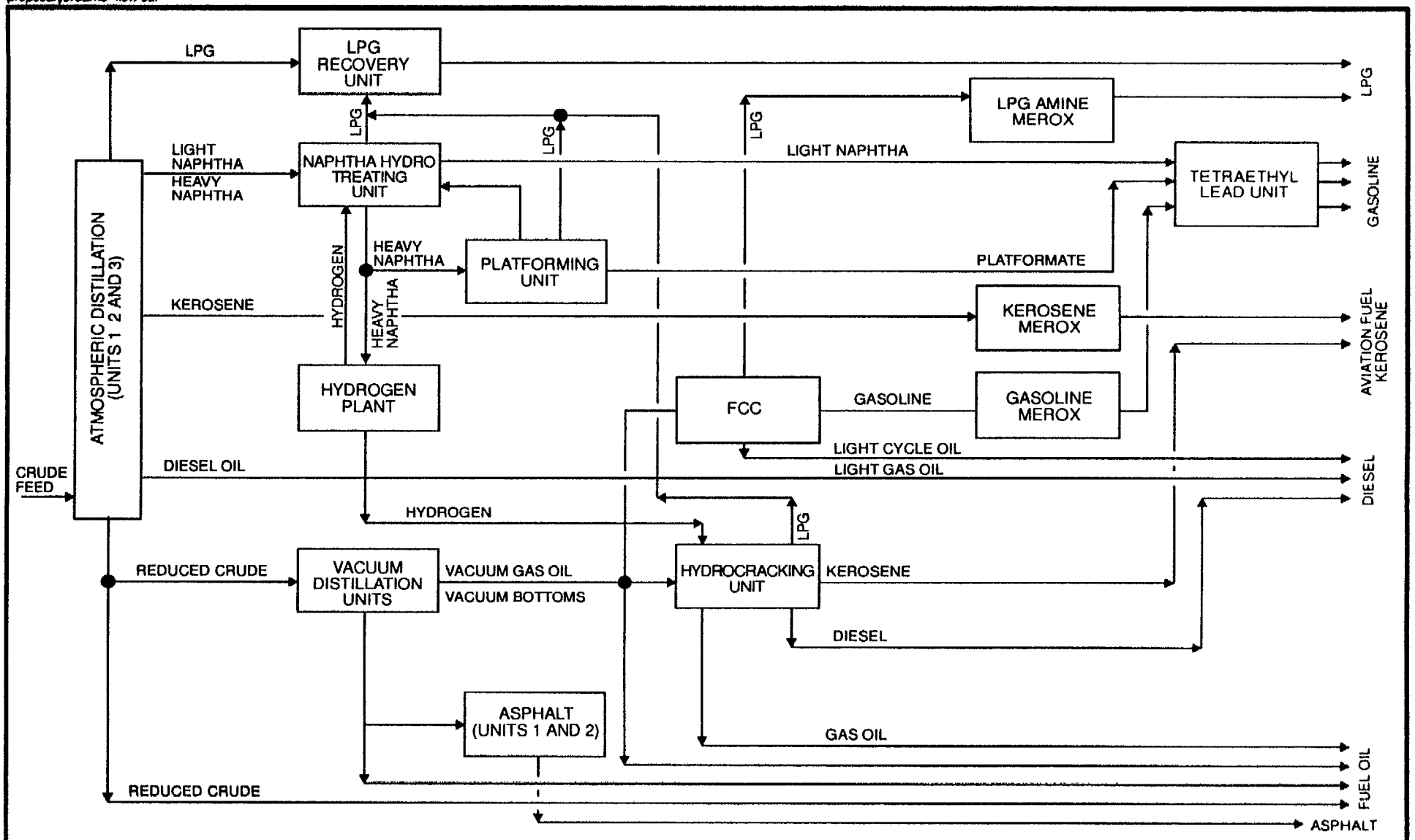

Figure 1

BLOCK FLOW DIAGRAM FOR JPRC PROCESSES

FEASIBILITY STUDY FOR JORDAN PETROLEUM REFINERY COMPANY
Zarqa Jordan

HARZA *Consulting Engineers and Scientists*

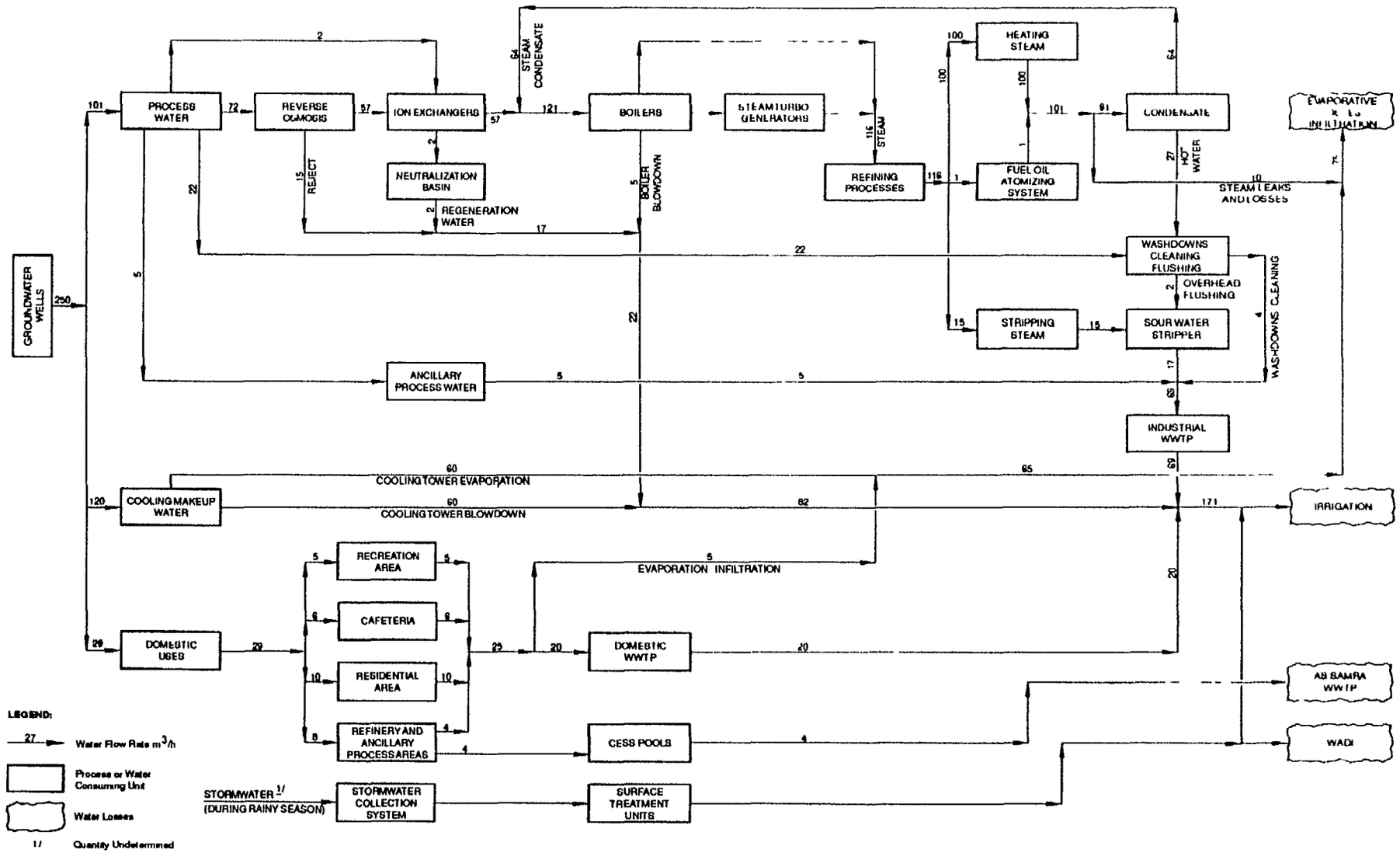

Figure 2

OVERALL WATER BALANCE

FEASIBILITY STUDY FOR JORDAN PETROLEUM REFINERY COMPANY

Zarqa, Jordan

HARZA *Consulting Engineers and Scientists*

\jordan\ob211.pm5

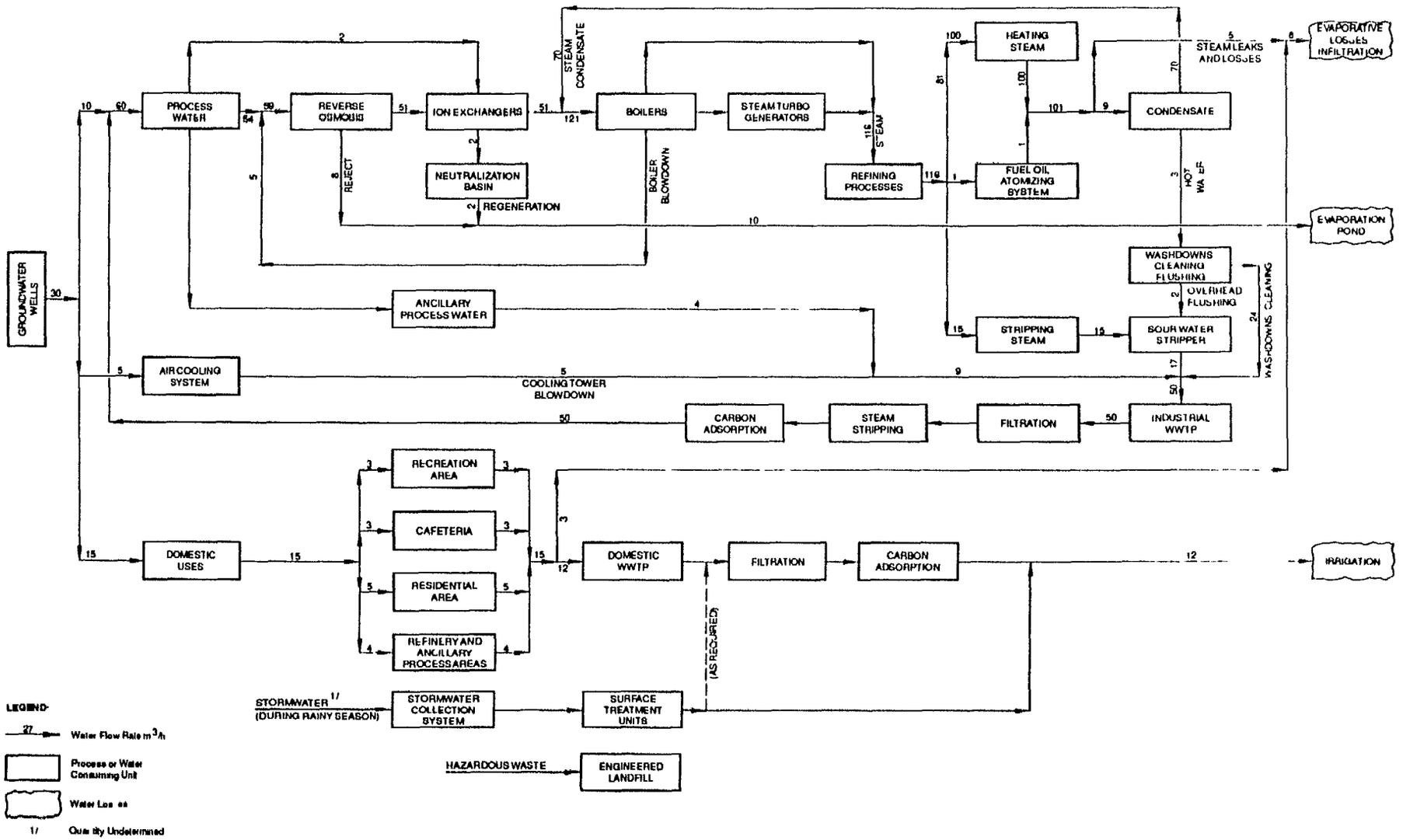

Figure 3

WATER BALANCE WITH RECYCLE AND REUSE

FEASIBILITY STUDY FOR JORDAN PETROLEUM REFINERY COMPANY

Zarqa Jordan

HARZA *Consulting Engineers and Scientists*

c:\work\fig3 11a pr 5

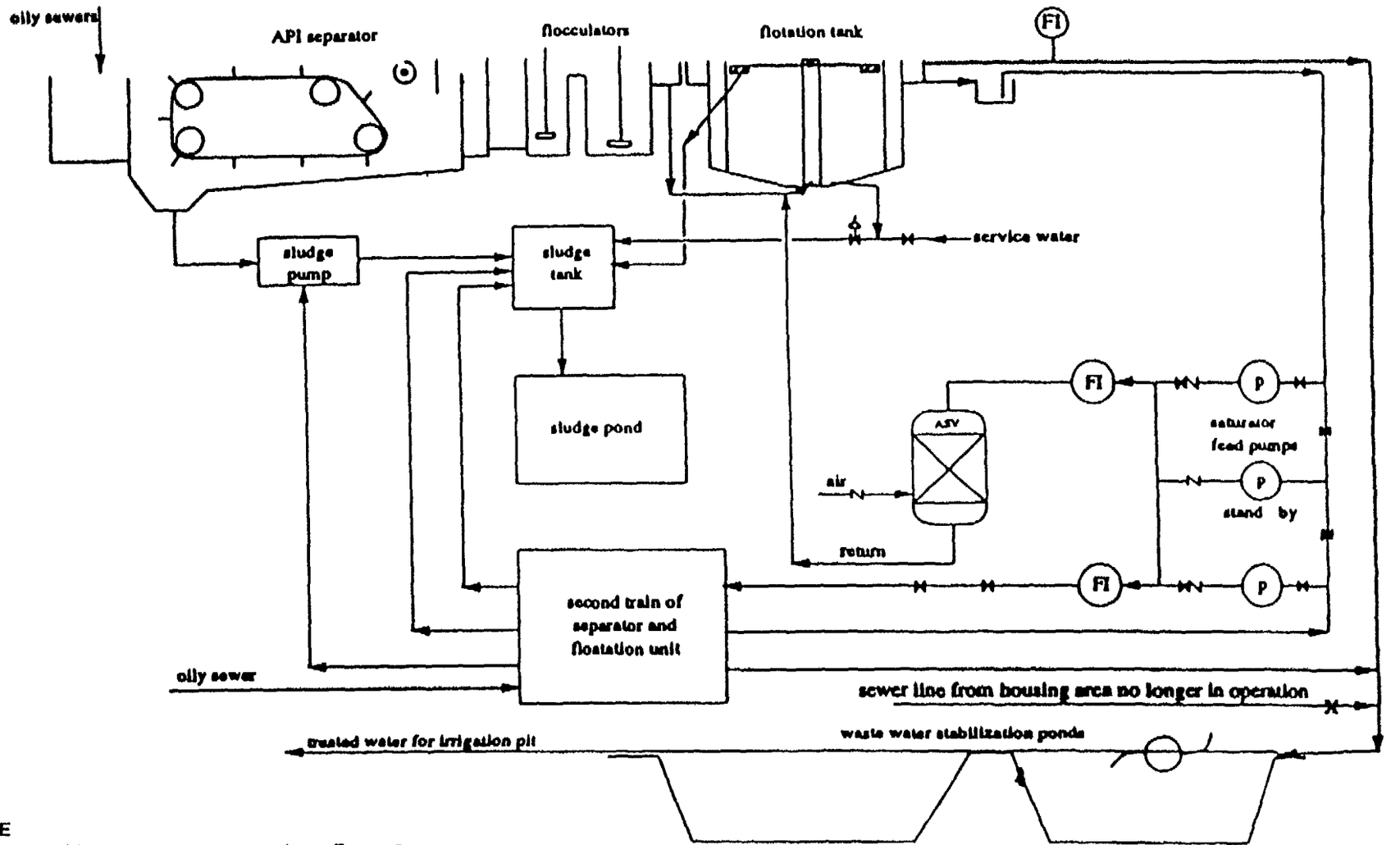

NOTE
For proposed facility improvements refer to Figure 3

SOURCE
Draft final report of Industrial Pollution Control Project in Jordan
Component 2 Industrial Wastewater Pretreatment requirements

HARZA Consulting Engineers and Scientists

Figure 4
INDUSTRIAL WASTEWATER TREATMENT PLANT
FEASIBILITY STUDY FOR JORDAN PETROLEUM REFINERY COMPANY

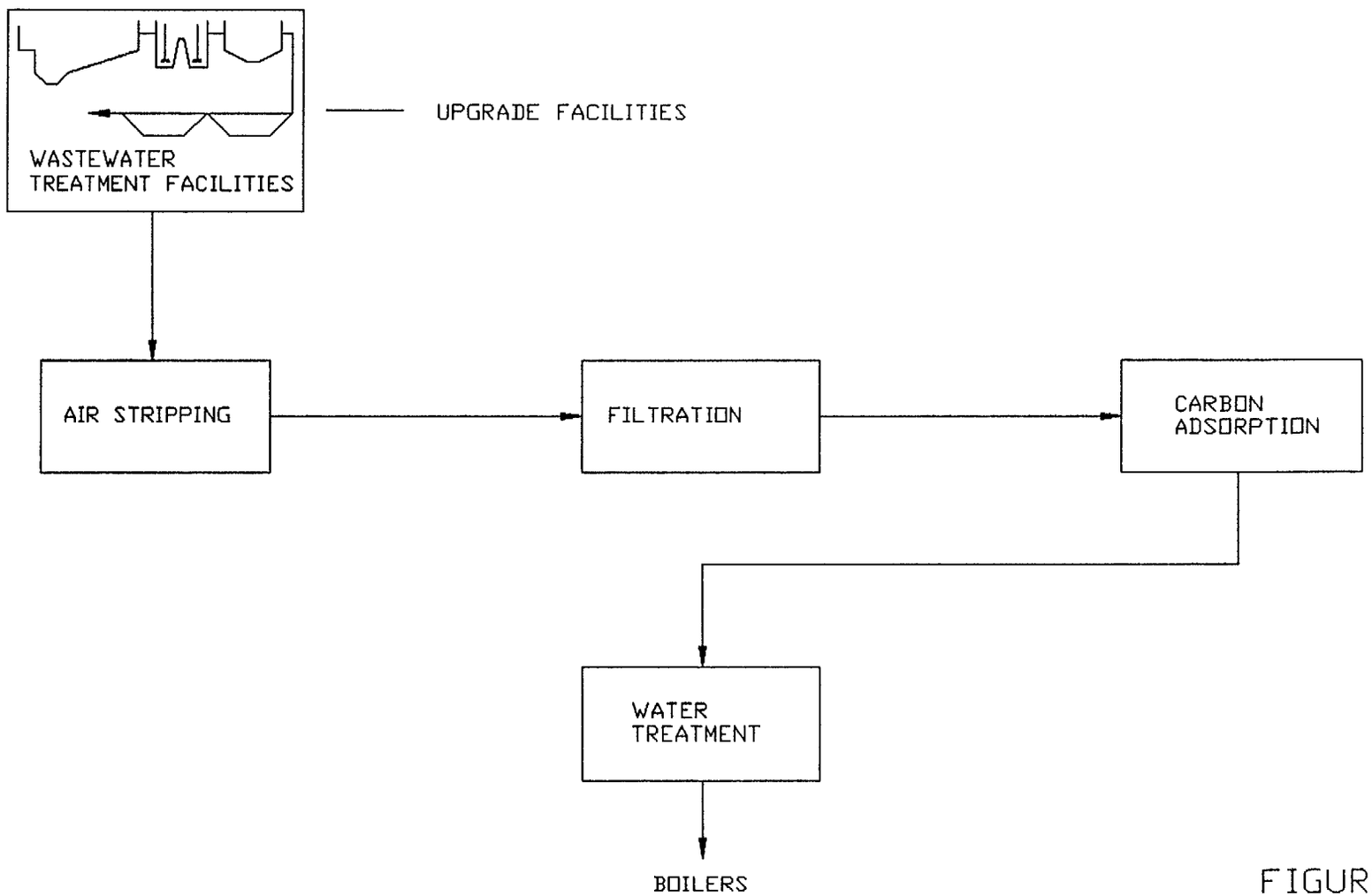

FIGURE 5

CONCEPTUAL DWG FOR REUSE AS
BOILER WATER

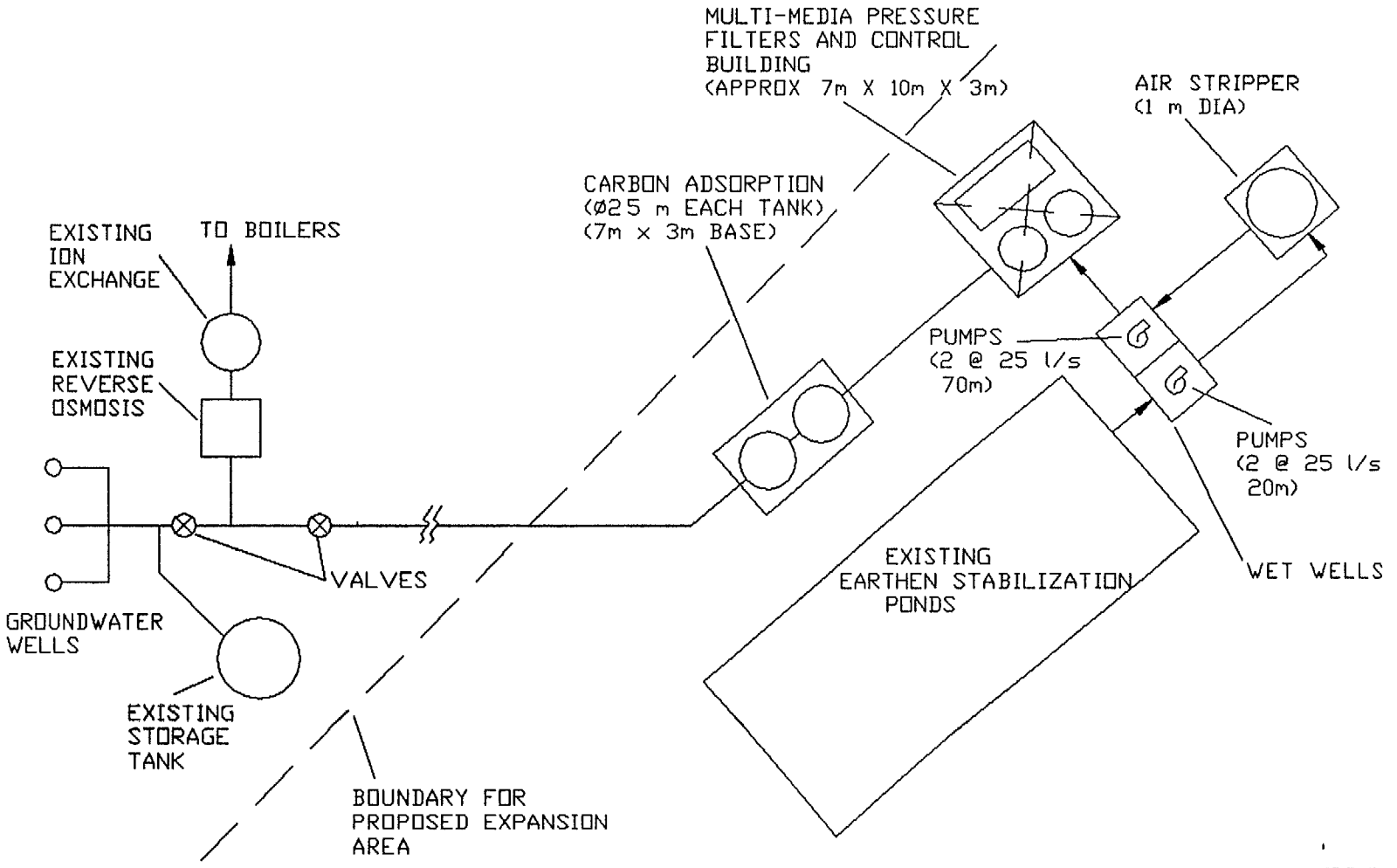

FIGURE 6

LAYOUT FOR REUSE AS BOILER WATER

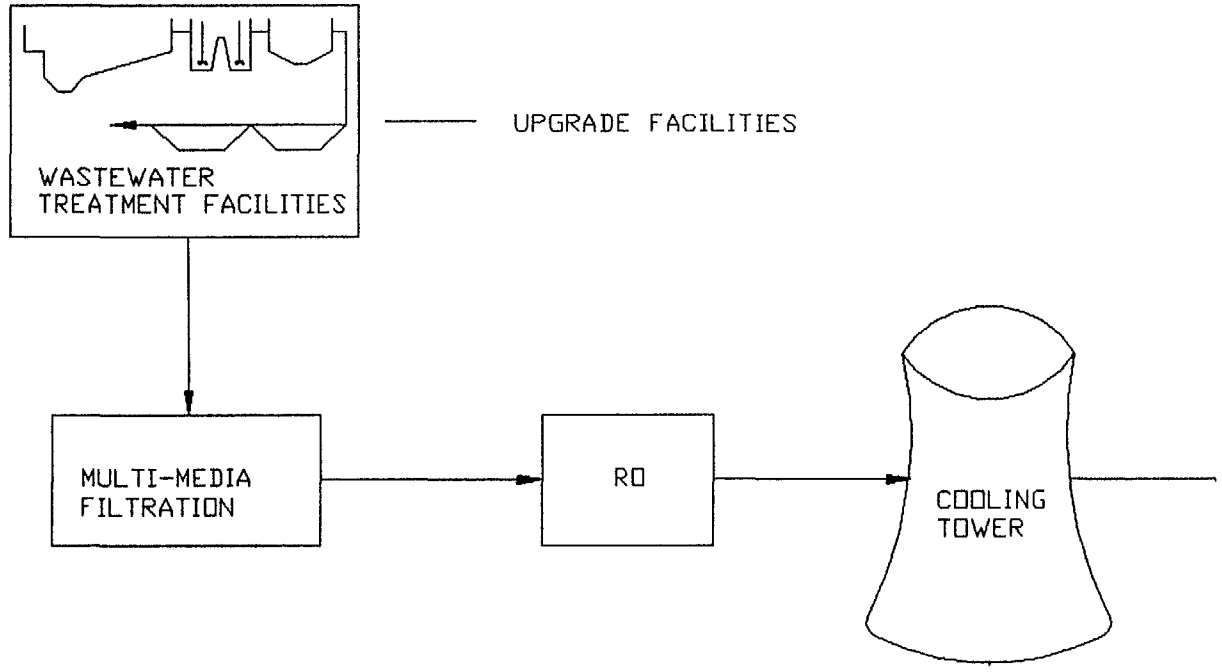

FIGURE 7

CONCEPTUAL DWG FOR REUSE AS
COOLING WATER

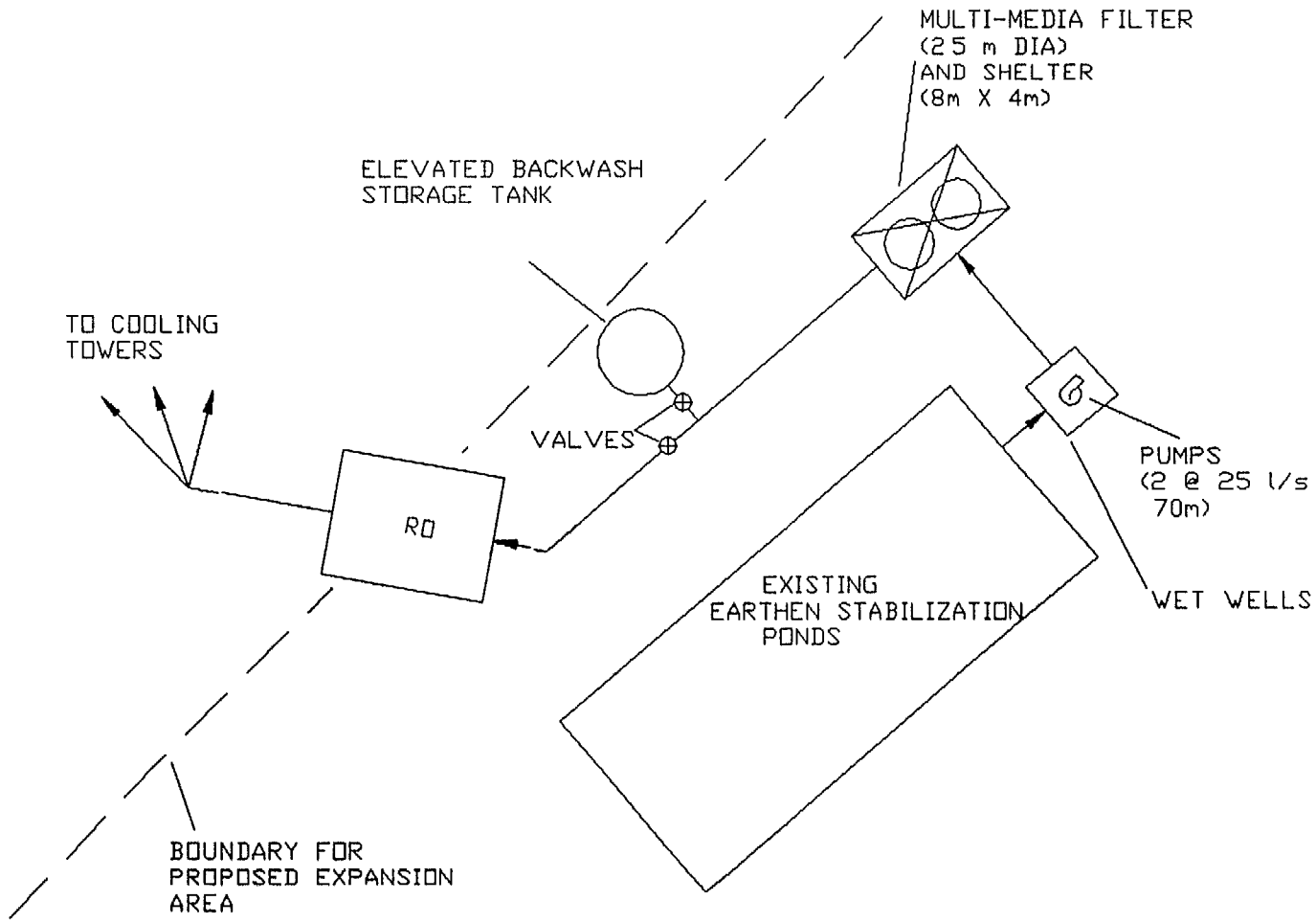

FIGURE 8

LAYOUT FOR REUSE AS COOLING WATER

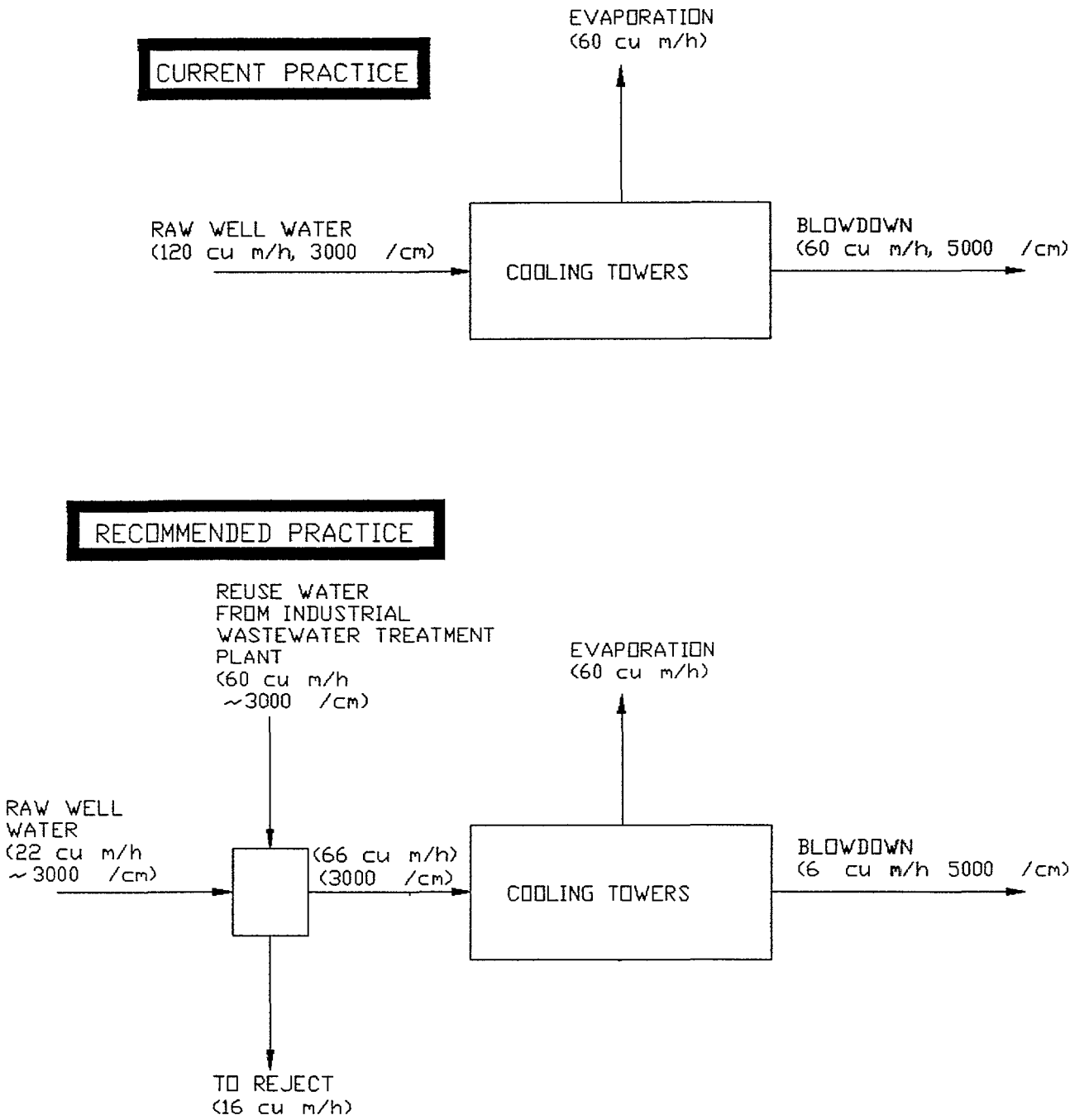

REFINERY
FIGURE 9

CONCEPTUAL DWG FOR REVERSE OSMOSIS
AT COOLING TOWER

APPENDIX A

Screening of Recommendations for Jordan Petroleum Refinery Company

The recommendations provided in the Audit Report for Jordan Petroleum Refinery Company (JPRC) (USAID Report No 3114-94-2b-08 February 1995) were screened to determine the most promising alternative for further investigation in a detailed feasibility study The recommendations of the audit report and the screening rationale applied to each is provided below

Recommendation 1

Immediately initiate a wastewater monitoring program to determine the quality and quantity of wastewater discharged The process wastewater should be monitored for oil and grease, suspended solids, pH, phenols, selected metals, total dissolved solids, and other parameters required by regulations In addition, domestic wastewater should be monitored for biological oxygen demand, chemical oxygen demand, ammonia, and phosphate

Wastewater monitoring is technically feasible and should be further pursued in future JPRC plans

Recommendation 2

Study, design, and implement an air cooling system

As indicated by JPRC staff, this measure is impractical due to the high ambient temperature in Jordan, which limit the efficiency of air cooling technologies It is possible to used a combined air cooling and wet cooling system, but it is costly to adapt air cooling to an existing wet system This recommendation is therefore not considered feasible

Recommendation 3

Upgrade the industrial wastewater treatment plant

This measure is **recommended for Feasibility Study**, since improved wastewater treatment will reduce the amount of contaminants discharged to the environment and additionally will allow for water conservation by reuse of treated wastewater

Recommendation 4

Upgrade the domestic wastewater treatment plant

It may be advantageous to convey the domestic wastewater to the aeration pond of the industrial wastewater treatment plant, as discussed in this report rather than treat it in a separate plant This would improve the Carbon Phosphorous Nitrogen ratio of the industrial wastewater,

increasing the efficiency of the biological treatment ponds and would additionally increase the amount of effluent available for reuse A second option would be to construct a package system such as an extended aeration or trickling filter system

Recommendation 5

Study design, and construct an on-site hazardous waste landfill Industrial solid wastes should be classified and disposed based upon their potential environmental impact The hazardous wastes could be classified using USEPA standards Develop and policy to maximize the potential recycling for domestic solid wastes

This measure appears to be technically feasible, given that there is some available on-site space It suggested, however, that JPRC coordinate efforts in this regard with public authorities, so that the landfill - whether on-site or off-site - be made accessible to other industries in the region with hazardous waste disposal needs This issue should be further investigated, since the current disposal practices of hazardous waste have a potentially significant impact on groundwater quality

Recommendation 6

Minimize the volume of RO reject and IX regenerant wastewaters Consider the following

- *Install improved RO membranes,*
- *Optimize treatment processes, and*
- *Replace the existing IX system with a more efficient system*

Comments by JPRC staff confirm Harza s assessment that the existing RO system is operating efficiently, and they additionally mention that the currently used RO membranes are the best available The existing IX system also is performing satisfactorily, however, the IX can be improved by installing a either a short-bed ion-exchange process (such as Eco-Tech) or a continuous deionization (CDI) system (such as Ionpure by U S Filter) to minimize the amount of regeneration chemicals The advantages of such systems are discussed in detail in the Feasibility Study Report for the UMIC

Recommendation 7

Contain and concentrate high TDS wastewater using pond evaporation The final disposal should be a combination of evaporation and solids landfilling

JPRC staff have indicated there is insufficient on-site land available for pond evaporation This measure therefore will no longer be considered

Y2

Recommendation 8

Minimize water losses from washdowns by implementing the following

- *Substitute pressurized steam cleaning methods for existing washdown techniques*
- *Use dry vacuum techniques instead of washing spills down the drain,*
- *Utilize water conservation equipment as much as possible including flow regulation devices, automatic shut off valves, timer control valves nozzles and overflow preventors, and*
- *Perform washdowns on a planned schedule with established protocols and procedures*

The above measures are technically feasible and should be pursued in future JPRC plans

Recommendation 9

Minimize wastewater generation due to spills and leaks by implementing the following

- *Improve housekeeping,*
- *Develop and implement an efficient spill prevention, control and countermeasures program to minimize the incidence of spills and leaks, and*
- *Provide secondary containment for piping and bulk chemical and oil storage tanks,*

The above measures are technically feasible and should be pursued in future JPRC plans

Recommendation 10

Reduce domestic water consumption and wastewater generation by performing the following

- *Meter all water users to identify areas of excessive use,*
- *Utilize flow control devices on shower heads and gardens,*
- *Adjust float height in toilets to reduce flush volume, and*
- *Inspect plumbing routinely and repair leaky pipes, valves and faucets*

The above measures are technically feasible and should be pursued in future JPRC plans

Recommendation 11

Reduce neutralization chemical requirements by sparging spent caustic from the sour water stripper with catalytic cracker flue gas Incinerate the resulting off gasses

Comments by JPRC staff indicate that previous attempts to implement this measure were abandoned due to odor problems They also indicate that incineration of off gases is impractical due to the volume of gases and potential effects on the processes

Recommendation 12

Improve sour water stripper waste oil-water separation by collecting separately and mixing with de-emulsifying chemicals prior to discharge to sewers

The water/oil emulsion in the sour water stripper effluent results from insufficient stripping of ammonia and other nitrogen compounds Mixing the stripper effluent with de-emulsifying chemicals prior to sewer discharge is technically feasible, however, it is expected that the emulsion problem will be eliminated by implementing sour water stripper improvements, as discussed in Section 4 1 2 of this FS report (caustic dosage system improvements and replacement of stripper packing) Therefore, it is recommended that no action be taken until the stripper improvements are implemented and the results adequately evaluated

Recommendation 13

Develop an improved storm water management policy Storm water can be collected on-site with graded ponds to eliminate discharge to the Wadi and provide water for the process

The above measures are technically feasible and can potentially be considered in conjunction with an upgrade of the industrial wastewater treatment plant for wastewater reuse, as stated in Recommendation 3

Recommendation 14

The JPRC should develop an environmental management program to include

- *Establishing an Environmental Department with dedicated personnel and sufficient resources,*
- *Writing an environmental policy complete with missions, visions, goals, policies and a future work plan PP/WM and water conservation goals need to be established to achieve the PP/WM program, in line with Ministry goals, and*
- *Developing of training and incentive programs for all JPRC personnel*

This item is technically feasible and should be pursued in future JPRC plans

Recommendation 15

Initiate a groundwater quality monitoring program Observation wells or clusters should intercept underlying aquifers We recommend that groundwater quality be monitored quarterly for the first two years and then bi-annually for the subsequent three years to identify any trends in groundwater quality

This item is technically feasible and should be pursued in future JPRC plans The following parameters should be monitored

- VOC (including Benzene Ethylbenzene, Toluene, Xylene)
- PNA (including Anthracene, Benzo(a)pyrene, Chrysene, Phenanthene, Pyrene)
- Substituted Phenols (including 2,4-Dimethylphenol, Phenol)
- Metals (including Chromium (total), lead, nickel)
- Cyanide
- GRO, DRO
- Nitrates, Nitrites
- Sulfates

Recommendation 16

Consider a plan for reduction (99 percent) in SO_2 emissions by installing a Clause unit, purchasing low sulfur fuel or installing SO_2 scrubbers

JPRC staff indicates a sulfur plant is scheduled to be implemented in the near future

Recommendation 17

Consider the following PP/WM items for feasibility level studies

- *Air cooling system,*
- *Treatment and recycling of domestic and process wastewater and storm water,*
- *On-site hazardous waste landfill, and*
- *Reduction of domestic water use*

These items were discussed previously in Recommendation 2 The air cooling system is not feasible

APPENDIX B

Vanguard® air strippers effectively remove organic solvents, chlorinated hydrocarbons, fuel/gasoline hydrocarbons, degreasers, and certain other substances from water.
The following is a partial list of these substances.

Ammonia
Benzene
Bromodichloromethane
Bromoform
Bromomethane
Carbon tetrachloride
Chlorobenzene
Chloroethane
Chloroform
Chloromethane
DBCP
Dibromochloromethane
1, 4-Dichlorobenzene
Dichlorodifluoromethane
1, 1 Dichloroethane
1, 2-Dichloroethane
1, 1 Dichloroethylene
t-1, 2-Dichloroethylene
1, 2 Dichloropropane
c 1 3 Dichloropropene
t 1 3 Dichloropropene
EDB
Ethylbenzene
Hydrogen sulfide
Methane
Methylene chloride
MTBE
Radon
1, 1, 2, 2 Tetrachloroethane
Tetrachloroethylene (PCE)
Toluene
1, 1, 1-Trichloroethane
1, 1, 2 Trichloroethane
Trichloroethylene (TCE)
Trichlorofluoromethane
1,2,4 Trimethylbenzene
Vinyl chloride
Xylenes

PHYSICAL SPECIFICATIONS:

	Vanguard® Air Strippers				
Models	ΔS-1 Series	ΔS-1 5 Series	ΔS-2 Series	ΔS-3 Series	ΔS-4 Series
Stripper Design	Counterflow, Forced Draft				
Nominal dia., Ft.	1 0	1 5	2 0	3 2	4 1
Delta Pak™ hgt, Ft	14 5	to	23 5	5 5 to 17 5	6 5 to 18.5
Water Flow, GPM	2 to 30	7 5 to 50	11 to 90	35 to 150	55 to 350
Motor HP	1 5	1 5	1 5 to 5	2 to 5	3 to 7 5
Fan Type	Centrifugal Blower				
	Direct	Drive	Direct or Belted	Belted	Drive
	Materials of Construction				
SHELL	FRP		Or	Polyethylene	
PACKING	PVC	PVC	PVC	PVC	PVC
PIPING	PVC	PVC	PVC	PVC	PVC

Above Specifications Are Subject To Change Without Notice In The Interest Of Product Improvement.

Form ΔS-1300 3/84
Printed In U.S.A.
Revised 5/90

The information, recommendations and opinions set forth herein are offered solely for your consideration inquiry and verification, and are not, in part or total, to be construed as constituting a warranty or representation for which we assume legal responsibility Nothing contained herein is to be interpreted as authorization to practice a patented invention without a license.

Delta Cooling Towers, Inc
114 Clinton Road
P O Box 952
Fairfield New Jersey 07004-2970
Telephone 201/227-0300
Fax 201/227-0458

Delta Cooling Towers

BEST AVAILABLE COPY

(1) DELTA VANGUARD® AIR STRIPPERS
1'0" – 5'0" IN 6 INCH INCREMENTS
5'0" – 10'0" IN 1 FOOT INCREMENTS
SHELL MATERIAL, FRP OR S/S

PACKING
DELTA-PAK® (STRUCTURED) OR RANDOM/DUMPED

(3) SKID MOUNTING
STEEL PLATFORM COATED WITH AIR DRY PHENOLIC BLACK

(4) BLOWER WEATHER ENCLOSURE PROTECTS MOTOR & DRIVE FROM ELEMENTS

(6) ACCESS LADDER & SAFETY CAGE MATERIAL ALUMINUM OR FIBERGLASS WITH NON-SKID RUNGS MEETS OR EXCEEDS OSHA STANDARDS

(8) VIBRATION CUT OUT SWITCH PROTECTS BLOWER FROM EXCESSIVE VIBRATION

(13) BLOWER AIR PREHEATER FOR SEVERE WINTER OPERATION

(14) TRANSFER PUMP PACKAGE MOUNTING & PIPING AVAILABLE WITH SKID ONLY

(16) TANKS
200–2000 GALLON CAPACITY MATERIAL HDPE COVERS & FITTINGS AVAILABLE

(17) WELL PUMPS
STAINLESS STEEL
TEFLON SEALS
ELECTRIC OR PNEUMATIC

(18) WELL LIQUID LEVEL CONTROL, INTRINSICALLY SAFE

(19) CONTROL PANEL
NEMA 4 – STD
NEMA 7 12 – OPT

(21) TELEMETRY REMOTE TERMINAL ALARM/STATUS/RELAYS SOFTWARE

(23) CHEMICAL CLEANING SYSTEM
5–150 GPM 1–5 HP
SKID MOUNTED PREWIRED PREPIPED
CHEMICALLY RESISTANT PUMP & MOTOR
MIXING CHAMBER HOSE VALVES GAUGES
pH CONTROLLER – OPTIONAL
STARTER – OPTIONAL
ADDITIONAL HOSE – OPTIONAL

(24) SOIL VENTING SYSTEM COMPLETE WITH REGENERATIVE VACUUM BLOWER MOISTURE SEPARATOR IN-LINE FILTER INLET & OUTLET SILENCERS

(26A) LIQUID PHASE CARBON ADSORPTION SYSTEMS
SINGLE CANISTERS AVAILABLE FOR 5–200 GPM
PRESSURE RELIEF VALVE AVAILABLE (NOT SHOWN)

(26B) VAPOR PHASE CARBON ADSORPTION SYSTEMS
SINGLE CANNISTERS AVAILABLE FOR 50–5000 SCFM
DUCT WORK AVAIL

(26C) EXPLOSION PROOF AIR HEATER AVAIL IN ELECTRIC NATURAL GAS OIL AND STEAM

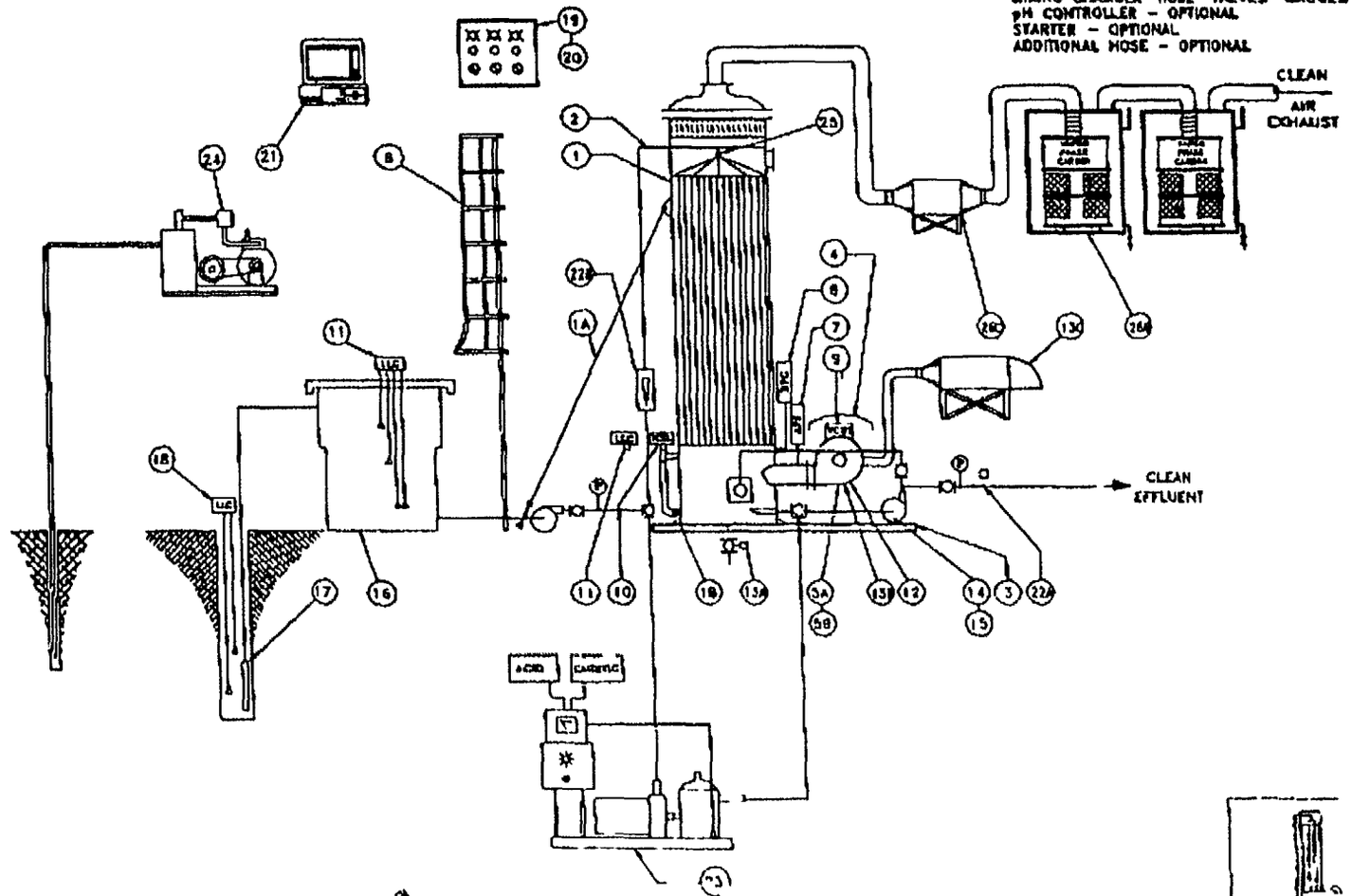

BILL OF MATERIALS	
ITEM	DESCRIPTION
1	VANGUARD® AIR STRIPPER
1A	GUY WIRE PACKAGE
1B	FREE STANDING DESIGN
2	HIGH FLOW OPTION
3	SKID MOUNTING
4	BLOWER WEATHER ENCLOSURE
5	BLOWER COATING OPTIONS
5A	MASTIC COATING
5B	PREMIUM CORROSION PROTECTION
6	LADDER & CAGE
7	AIR FLOW SWITCH
8	DIFFERENTIAL PRESSURE GAUGE
9	VIBRATION CUT OUT SWITCH
10	HIGH SUMP LEVEL SWITCH
11	LIQUID LEVEL CONTROL PACKAGE
12	X-TRA AIR FLOW
13	ANTI FREEZE OPTIONS
13A	DRAIN VALVE ACTUATOR
13B	TWO SPEED FAN MOTOR
13C	BLOWER AIR PREHEATER
14	TRANSFER PUMP PACKAGE
15	PREMOUNTING OF TRANSFER PUMP
16	STORAGE TANK
17	WELL PUMP
18	WELL LIQUID LEVEL CONTROLS
19	CONTROL PANEL
20	PREMOUNT & PREWIRE OF C.P.
21	TELEMETRY REMOTE TERMINAL SYSTEM
22	FLOWMETER TYPES
22A	FLOWMETER/TOTALIZER
22B	ROTOMETER/FLOWMETER
23	CHEMICAL CLEANING SYSTEM
24	SOIL VENTING SYSTEM
25	DISTRIBUTION NOZZLE(S)
26	CARBON ADSORPTION SYSTEM
26A	LIQUID PHASE CARBON
26B	VAPOR PHASE CARBON
26C	EXPLOSION PROOF AIR HEATER

DELTA COOLING TOWERS, INC
114 CLINTON RD FAIRFIELD NJ 07004
PH (201) 227 0300 FAX (201) 227 0

TITLE VANGUARD® AIR STRIPPER SYSTEM SCHEMATIC

PAID FOR AIR STRIPPER OPTIONS

DWG BY
APPROD BY

SCALE NTS
DATE
JOB NO
DR NO

VANGUARD® AIR STRIPPER OPTIONS

BEST AVAILABLE COPY

CALGON

CALGON CARBON CORPORATION

SYSTEM BULLETIN

MODEL 8

MODULAR CARBON ADSORPTION SYSTEM

DESCRIPTION

The Calgon Carbon Model 8 is an adsorption system designed for the removal of dissolved organic contaminants from liquids using granular activated carbon. The modular design concept allows selection of options or alternate materials to best meet the requirements of the customer's site and treatment application.

The Model 8 system is delivered as two adsorbers and a separate compact center piping network, requiring only minimal field assembly and site connections. An optional platform skid is available to facilitate installation. The pre-engineered Model 8 design assures that all adsorption system functions can be performed with the equipment process design.

The process piping network for the Model 8 offers operation of the adsorbers in parallel or series flow (with either adsorber placed in the lead stage). The piping can also isolate either adsorber from the process flow. This permits carbon exchange or backwash operations to be performed on one adsorber without interrupting treatment.

The underdrain design provides for the efficient collection and uniform distribution of treated water and the uniform distribution of backwash water. The Model 8 system is designed for use with Calgon Carbon's closed loop carbon exchange service. Using special designed trailers, spent carbon is removed from the adsorbers in a close loop and returned to Calgon Carbon for reactivation. The transfer is accomplished without exposure of operating personnel to contaminated liquid. The trailers also recharge the adsorbers with fresh activated carbon.

SYSTEM SPECIFICATIONS

Available options:

- System platform skid
- In-bed water sample collection probes
- PPL lined steel pipe for carbon discharge.
- Full bore stainless steel ball valves for carbon fill and discharge pipelines
- Independent backwash source
- Carbon exchange package
- Pre-loaded carbon materials
- In-line carbon retention screens
- Differential pressure switches
- Suitable application linings
- Multiple manway sizes
- Process pipe sizes and materials of construction
- Pressure relief valves
- Pressure gauges
- Multiple underdrain designs
- Vessel pressure ratings 75lb - 125lb
- Multiple internal linings

Carbon adsorbers:

- Carbon steel ASME code stamped pressure vessels.
- Internal vinyl ester lining (25 to 35 mils) for potable water and most liquid applications. (Recommended)
- Polypropylene slotted nozzles for water collection and backwash distribution.

Standard adsorption system piping:

- Schedule 40 carbon steel process piping with cast iron fittings
- Cast iron butterfly valves for process piping

System external coating:

- Epoxy mastic paint

OPERATING CONDITIONS

Carbon per adsorber	10 000 lbs (4540 kg)
Pressure rating	75 psig (517 kPa)
Pressure relief	Graphite rupture disk (67 psig)
Vacuum rating	14 psig
Temperature rating	150°F maximum (65°C)
Backwash rate	Typical 640 gpm (30% expansion)
Carbon transfer	Air pressure slurry transfer
Utility air	100 scfm at 30 psig (reduce to 15 psig for trailer)
Utility water	100 gpm at 30 psig
Freeze protection	None provided, enclosure or protection recommended

Model 8 Pressure Drop

Filtrasorb 300 Carbon (55°F)

4" Sch. 40 Carbon Steel Pipe

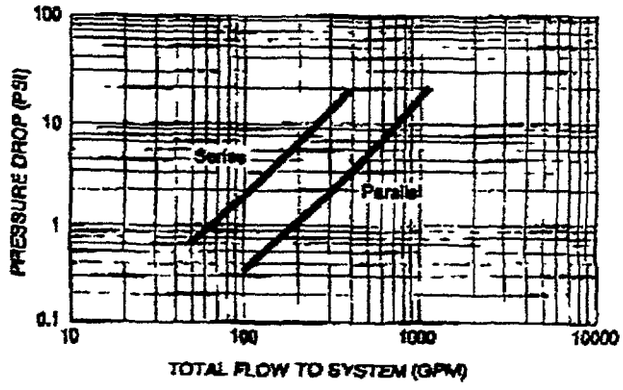

Copyright © 1994 Calgon Carbon Corporation

LS-SLL-10/94

CALGON CARBON CORPORATION P.O. BOX 717 PITTSBURGH, PA 15230-0717 • PHONE 1-800-4CARBON

BEST AVAILABLE COPY

DIMENSIONS AND FIELD CONNECTIONS

Adsorber vessel diameter	8 ft. (2440 mm)
Process Pipe	4 in.
Process Pipe connection	125# ANSI flange
Utility water connection	¾ in hose connection
Utility air connection	¾ in hose connection
Carbon hose connection	4 in. Kamlock type
Backwash connections	4 in or 6 in. flange
Adsorber maintenance access	20 in. round flanged manway
Adsorber shipping weight	16 000 lbs. (empty) (7300 kg)
System operating weight	92 000 lbs. (41 800 kg)

CAUTION

Wet activated carbon preferentially removes oxygen from air. In closed or partially closed containers and vessels, oxygen depletion may reach hazardous levels. If workers are to enter a vessel containing carbon, appropriate sampling and work procedures for potentially low-oxygen spaces should be followed including all applicable federal and state requirements.

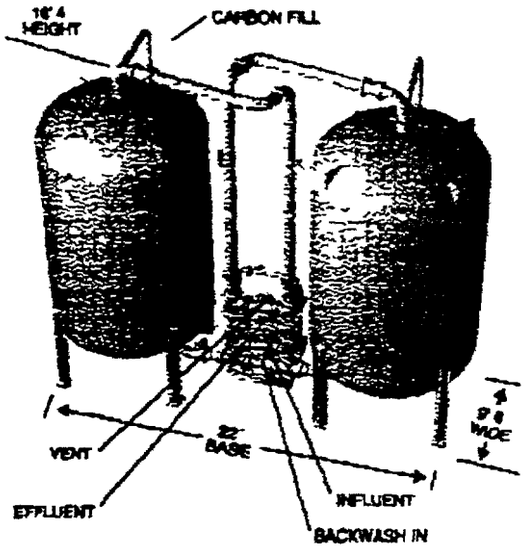

Model 8 Adsorption System

Calgon Carbon Corporation reserves the right to change specifications without notice for components of equal quality.

For detailed information on the products described in this bulletin, please contact one of our Regional Sales Offices located nearest to you.

SALES OFFICES

Region I
Bridgewater, NJ
Tel (908) 526-4646
Fax (908) 526-2467

Region II
Pittsburgh, PA
Tel (412) 787-6700
800/4-CARBON
Fax (412) 787-6676

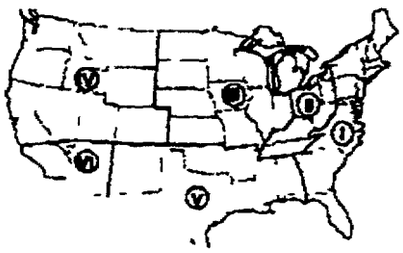

Region IV
San Mateo, CA
Tel (415) 572-9111
Fax (415) 574-4466

Region V
Houston, TX
Tel (713) 690-2000
Fax (713) 690-7909

Region III
Lisle, IL
Tel (708) 505-1919
Fax (708) 505-1936

Latin America/ Asia Pacific
Pittsburgh, PA
Tel (412) 787-4519
Fax (412) 787-4523

Canada
Calgon Carbon Canada, Inc.
Mississauga, Ontario
Tel (905) 673-7137
Fax (905) 673-6883

Europe
Chemviron Carbon
Brussels, Belgium
Tel 32 2 773 02 11
Fax 32 2 770 93 94

Region VI
Carlsbad, CA
Tel (619) 431-5550
Fax (619) 431-6169

If at any time our products or services do not meet your requirements or expectations, or if you would like to suggest any ideas for improvement, please call us at 1-800-548-1999. From outside the U.S. please call +1-412-787-6700.

CALGON

CALGON CARBON CORPORATION

BEST AVAILABLE COPY

INDUSTRIAL

INDUSTRIAL FILTER & PUMP MFG. CO.

BULLETIN 212

TYPE 212
MULTI-MEDIA
FILTERS

INDUSTRIAL
MULTI-MEDIA FILTRATION
EQUIPMENT

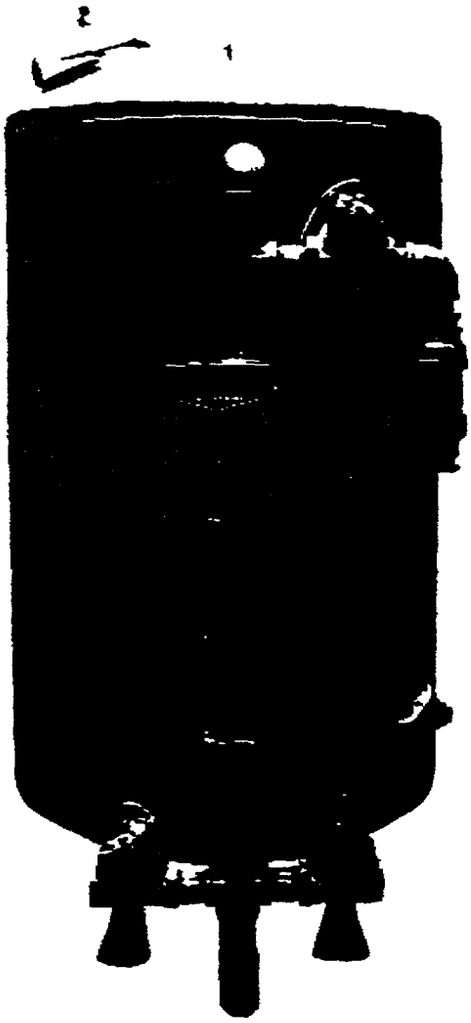

FEATURES:

- Filter turbidity up to 7 times faster than conventional sand filters
- Produces greater clarity through fine multi-stage filtration—down to 10 microns or less.
- Runs up to 50 times longer between backwashes because entire bed traps turbidity
- Saves 85 percent of backwash water normally required
- Requires only one fifth the space of ordinary bed filters
- Automatic backwash, rinse and service step initiation
- Special media available for iron and sulfide removal

TYPICAL APPLICATIONS:

- Polishing raw, well, or wastewater
- Potable water
- Process make-up
- Clarifier overflow wastewater
- Reuse of cooling and wash water

FILTRATION

The INDUSTRIAL Multi Media Filter represents a significant step forward in water filtration technology It offers you a highly efficient filter that does not take up a lot of space does not use much water for backwash filters much longer during the service cycle with low pressure drop before backwash is required and offers many other advantages detailed in this brochure

The design is highly efficient—several layers of scientifically selected filter media are contained in a single tank and stratified so that as water flows down through the various media maximum filtering takes place in each layer as described in the paragraph Quality Minerals below The design overcomes the basic fault of most sand and other single media filters that provide a maximum filtering efficiency only in the top few inches of the filter bed The INDUSTRIAL Multi Media filter operates at maximum efficiency throughout the entire filter bed

The various media have been selected according to material density This means that during backwash the media layers are automatically restratified so that the filter is immediately ready for service as soon as backwash is completed

TYPE 212's FEATURES

❶ Quality Minerals

Each layer of mineral in the INDUSTRIAL Multi Media filter has been specifically selected for a specific function The top layer of anthracite removes the larger particles without being blinded by the fines The second layer of filter sand removes particles to the clarity typical of conventional sand filters The third and fourth layers are two different sizes of garnet which polish filter by removing particles down to 10 microns The entire bed becomes the filter medium permitting a high dirt holding capacity with a finely polished effluent quality

❷ Automatic Valve System

INDUSTRIAL s factory assembled valve nest incorporates Y–pattern diaphragm valves for positive control with full flow offers low pressure loss high flow rate capability and either hydraulic or pneumatic operation Individual valves have less bulk less weight and are less complicated All parts can be serviced without disturbing the piping The valves open and close at a rate which positively assures that the valve arrangement is free of water hammer for long-lived operation

❸ Timer-Controller

The individual diaphragm valves are controlled by the action of a four position motor driven brass bodied rotary pilot valve which sequences the filter through the steps of Backwash Settle Rinse and Return to Service The action of the rotary pilot valve is controlled by a fully adjustable cycle timer The cycle timer is initiated by a calendar time clock which provides for the backwashing process to occur from one to seven times in a seven-day period As an option initiation may be accomplished by a signal from a differential pressure indicating switch The initiation may also be accomplished by manual push button and the system may also be manually indexed through a complete cycle in the event of a power failure

Heavy [illegible] and are tested at 150% of design pressure The interior of the tank is lined with a two part epoxy which is EPA approved for potable water Tankage may be optionally ASME code stamped

❺ Distribution System

Upper distribution is accomplished by a single point or multiple point baffle type depending on tank diameter The underdrain will be of the hub and radial type covered by a graded gravel supporting bed False bottoms are not employed

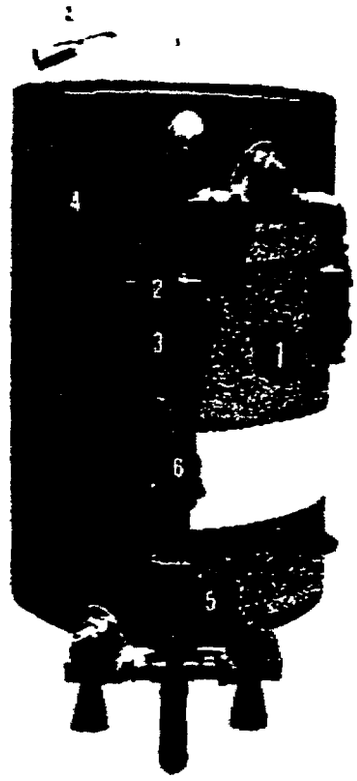

❻ Packaging

Systems are complete from inlet to outlet and include pressure gauge sample valve and backwash flow rate controller effective over a 30 to 100 psi pressure range Multiple units include electrical lock out to prevent more than one filter backwashing at a time Optionally multiple units may be skid mounted and prepiped

OPERATING DATA		
PRESSURE	20 psi-100 psi 1.5-7.0 bar	
TEMPERATURE	40°F-120°F 5°C-50°C	Standard
	up to 180°F up to 80°C	Available as Optional
ELECTRICAL REQUIREMENTS	120 v 60 Hertz 220 v 50 Hertz	

WARRANTED against failure due to faulty workmanship materials and corrosion for a period of 1 year

INDUSTRIAL®
since 1927

INDUSTRIAL FILTER & PUMP MFG CO • 5900 OGDEN AVE • CICERO, IL 60650-3888 • 708-656-7800 • FAX 708-656-7806

• PRESSURE FILTERS • PACKAGE AND CUSTOM LIQUID WASTE TREATMENT SYSTEMS • VULCANIZED RUBBER LINING • ION EXCHANGERS • EVAPORATORS • PUMPS • TEST CABINETS • SYSTEMS AUTOMATION

Copyright 1993 Printed in USA

U.S. FILTER / IONPURE
UNITED STATES FILTER CORPORATION

Series 4000 Reverse Osmosis Systems

For industrial water application

Ionpure™ Series 4000 Reverse Osmosis Systems are used for producing from 38 to 135 gpm (8 6 m^3/h to 30 7 m^3/h) of high purity water for industrial applications A minimum of 99% of microorganisms pyrogens, particles, colloids and organics ≥ 200 NMW as well as ≥ 95% of dissolved solids can be removed with a Series 4000 unit

Recommended Applications
- Boiler feed
- General industrial
- Central laboratory
- Central electronics pad
- Central hospital supply
- Pretreatment to Continuous Deionization (CDI) Systems

Preassembled Systems
Each free standing, skid-mounted preassembled system is comprised of a welded epoxy coated steel frame, motor pump units, RO cartridge housings, valves, piping, motor starter panel and logic controller in NEMA 12 enclosures Instrumenta tion includes reject and product flow meters, a feed and product conductivity monitor with percent rejection readout, temperature monitor and pressure gauges System control functions, such as tank level control and automatic flushing are controlled by an industrially hardened programmable logic controller

Spiral-Wound Membrane Cartridges
Series 4000 RO systems are designed for use with polyamide thin film composite RO membrane cartridges These cartridges give the highest rejection of inorganic and organic contaminants of any membrane available today Cartridges are sold separately

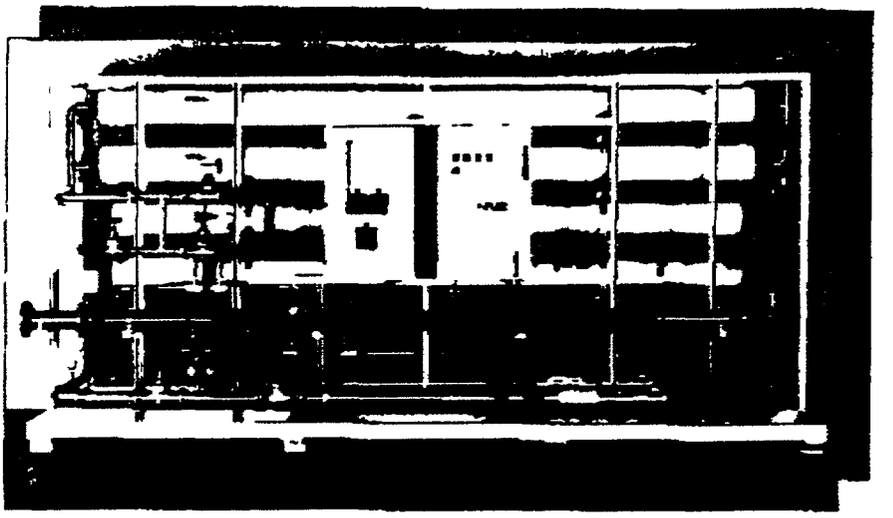

Quiet, Efficient Operation
The systems employ a submersible water cooled pump-motor unit which results in quiet operation and high efficiency, as the motor's waste heat is recovered it raises the feed water temperature to the RO cartridges, thus increasing their output

Complete Systems Support
Should your application require it Ionpure will provide complete system support Among the support options available are feed and product water analyses, pretreatment, and post treatment equipment

Systems Tailored to your Needs
A number of options are available for the RO 4000 to tailor the system to your particular needs
- High recovery recirculation
- Automatic sanitization controller
- Automatic product divert valve on low percent rejection or system shutdown
- Sanitary 316L SS product piping
- Clean in place connections
- Custom instrumentation packages

Specifications
Materials of Constructions
Low pressure piping Sch80 PVC
High pressure piping 300 series stainless steel
High pressure valves 316 stainless steel
Cartridge housings FRP laminate
Pump 316 stainless steel pump & motor

Series 4000
Reverse Osmosis Systems

System Specifications with Polymide Thin Film Composite

Model No (1)	Cartridge Quantity	Product Flow at 25°C gpm (m3/h)	% Recovery	Feed Flow at 25°C gpm (m3/h)	Power Consumption kw	Shipping Weight lbs. (kg)
Standard Recovery						
Z_R_423__	6	25 (5 7)	56	45 (10 2)	10 6	1700 (770)
Z_R_433__	9	38 (8 6)	56	68 (15 4)	13 5	2000 (906)
Z_R_443__	12	50 (11 4)	57	88 (20 0)	16 4	2300 (1042)
Z_R_444__	16	65 (14 8)	65	100 (22 7)	21 6	2700 (1223)
Z_R_454__	20	83 (18 8)	70	119 (27 0)	23 0	3100 (1404)
Z_R_464__	24	100 (22 7)	66	152 (34 5)	27 4	3500 (1586)
Z_R_474__	28	116 (26 3)	67	173 (39 3)	32 3	4000 (1812)
Z_R_484__	32	135 (30 7)	70	193 (43 8)	37 5	4500 (2039)
High Recovery						
Z_R_423__	6	25 (5 7)	56-80	31 (7 0) - 45 (10 2)	10 6	1700 (770)
Z_R_433__	9	38 (8 6)	56-80	48 (10 9) - 68 (15 4)	13 5	2000 (906)
Z_R_443__	12	50 (11 4)	57-80	63 (14 3) - 88 (20 0)	16 4	2300 (1042)
Z_R_444__	16	65 (14 8)	65 80	81 (18 4) 100 (22 7)	21 6	2700 (1223)
Z_R_454__	20	83 (18 8)	70 80	104 (23 6) - 119 (27 0)	23 0	3100 (1404)
Z_R_464__	24	100 (22 7)	66-80	125 (28 4) - 152 (34 5)	27 4	3500 (1586)
Z_R_474__	28	116 (26 3)	67-80	145 (32 9) - 173 (39 3)	33 3	4000 (1812)
Z_R_484__	32	135 (30 7)	70-80	169 (38 4) - 193 (43 8)	37 5	4500 (2039)

(1) System catalogue numbers are formed from a nine character alphanumeric code

Z_R_4____

Digit 2 Controller Options
- W = Base PLC controller
- D = Product divert logic (valve not included)
- A = Autosan controller (w/product divert logic)

Digit 4 Selects Recovery
- O = Standard recovery
- R = High recovery

Digit 6 Number of housings
- 3 to 8

Digit 7 Number of cartridges per housing
- 3 or 4

Digit 8 Voltage
- 3 = 380V/50 Hz, 6 = 208V/60 Hz 7 = 230V/60 Hz 8 = 460V/60 Hz

Digit 9 Options
- X = Base system
- S = Sanitary product tubing 180 grit polish in and out
- C = Clean-in-place ports
- B = Both options S and C

IONPURE

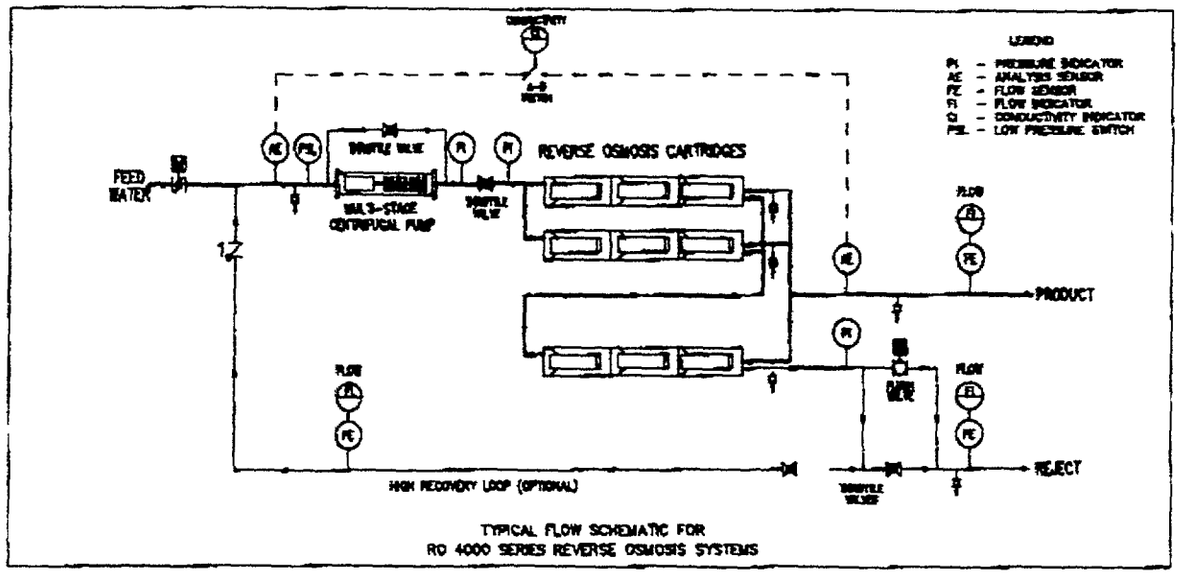

TYPICAL FLOW SCHEMATIC FOR
RO 4000 SERIES REVERSE OSMOSIS SYSTEMS

For More Information
To find out more about these and other Ionpure products and services, call for technical support At Ionpure you ll always find a Technical Support Representative available to answer any questions it's part of our service

Technical Support
(800) 783 PURE x5000
(508) 934-9349 x5000

In Europe Call

Belgium	010 45 46 07
France	(1) 34 82 17 00
Germany	(06002) 5050
Italy	02/45 100 179
Spain	(91) 327 17 40
The Netherlands	1608 17711
U K	0992-501513

International Distributor

U.S Headquarters
Ionpure Technologies Corporation
10 Technology Drive
Lowell, MA 01851
Telephone (508) 934-9349
(800) 783-PURE
Fax (508) 441-6025

European Headquarters
Ionpure Technologies S A R L
1/3, Rue Pavlov
78196 Trappes Cedex
Paris
Telephone (1) 34 82 17 00
Fax (1) 30 51 86 51

Ionpure is a registered trademark
[illegible]

In accordance with Ionpure Technologies Corporation policy of continual program of product development and improvement we reserve the right to change the product specification within