The Hashemite Kingdom of Jordan

Ministry of Water and Irrigation

PN-ACE-734
101033

Water Quality Improvement and Conservation Project

Feasibility Study:

Universal Modern Industries (Vegetable Oil Refining)

Report 3114-95-2b-43

Harza Environmental Services, Inc

Development Alternatives Inc

The Technical Assistance Team Includes

Development Alternatives, Inc
Science Applications International Corp
Harza Environmental Services, Inc
Development Associates Inc

USAID

United States Agency for International Development
Contract No 278-0288-00-C-4026-00

October 1995

1

FEASIBILITY STUDY FOR
UNIVERSAL MODERN INDUSTRIES COMPANY, LTD.
(VEGETABLE OIL REFINING INDUSTRY)

JORDAN

Submitted to
United States Agency
For International Development

Submitted by:
Development Alternatives, Inc.

Prepared for
Amman Chamber of Industry, Jordan
Ministry of Water and Irrigation, Jordan

Prepared by:
Harza Consulting Engineers and Scientists
Chicago, Illinois, USA
in association with
Royal Scientific Society
Amman, Jordan

2

PREFACE/ACKNOWLEDGMENTS

This report is the result of a feasibility study performed for the Universal Modern Industries Company Ltd in Jordan The purpose of the study was to evaluate technical and economical feasibilities of the pollution prevention/waste minimization (PP/WM) and water conservation techniques recommended in Audit Report #3114-94-2b-27 dated April 1995

Several individuals on the Water Quality Improvement and Conservation Project contributed to this report Dr Usama Mudallal of the Amman Chamber of Industry (Chamber) Engineer Rania Abdel Khaleq of the Ministry of Water and Irrigation (MWI), and Dr Omar Jabay and Eng Hashim Beano of the Royal Scientific Society of Amman, plant managerial and technical staff including Mr Fauzi Samaan, technical manager, shared their knowledge with Mr Krishna Mayenkar of Harza Consulting Engineers and Scientists (Harza), Chicago Illinois USA These technical staff worked under the direction of Dr Shawn R Niaki, P E Pollution Prevention Program Director, of Harza, who heads the WQIC component under which the study was housed It is from their combined expertise that this report was possible

Special appreciation is given to Dr Mohammed Bani Hani, Secretary General of MWI Eng Koussai Quteishat Secretary General of the Water Authority of Jordan (WAJ) Mr Khaldun Abuhassan, Chairman of the Chamber Mr Walid Al-Khathib, Director General of the Chamber Dr Muwaffaq Saqqar, Project Coordinator from MWI the members of the PP/WM working group from WAJ including Eng Abdul Wahab Matar Eng Marwan Al-Tal, Eng Mohamad Lafi and to Development Alternatives Inc , as represented by Edwin D Stains, Chief of Party, for their cooperation and confidence

EXECUTIVE SUMMARY

Development Alternatives, Inc (DAI) under Contract No 278-0288-00-C-4026-00 with the United States Agency for International Development (USAID) is performing an Industrial Wastewater Discharge Prevention Program (IWDPP) in Amman, Jordan This Program is one of four components of the Water Quality Improvement and Conservation Project (WQICP) funded by USAID This program is being performed by DAI with full coordination between the Ministry of Water and Irrigation (MWI) and the Amman Chamber of Industry (Chamber) Harza Consulting Engineers and Scientists (Harza), Chicago, United States (U S), was retained by DAI to lead the IWDPP The Royal Scientific Society (RSS) of Amman, Jordan was selected as a local consultant to assist Harza with the IWDPP This Program includes conducting the PP/WM audits, feasibility studies, and designing demonstration facilities at selected industrial facilities

This report presents the findings of the Feasibility Study (FS) for Universal Modern Industries Company, LTD (UMIC) The objective of the FS is to evaluate the technical, financial, and logistical feasibility of the most promising PP/WM and water conservation techniques identified for UMIC in the previously performed PP/WM audit

PROCESS AND FACILITY DESCRIPTION

The UMIC facility refines four oils refined, bleached, and deodorized (RBD) palm oil, RBD palmoline, semi-degummed corn oil, and semi-degummed soya oil The current production rate is 170 to 180 tons per day (T/day) The UMIC facility operates both chemical and physical refining processes Process operations consist of

- Crude oil transfer to storage tanks,
- Chemical refining operations degumming and neutralization, bleaching, and deodorization,
- Physical refining by steam stripping,
- Cooling and filtering, and
- Packaging

AUDIT CONCLUSIONS

The UMIC facility had already implemented some PP/WM and water conservation practices, such as recirculating the cooling water Additional opportunities identified during the audit are summarized below Some actions that the facility should initiate immediately are

- <u>Operation of the Wastewater Treatment System</u> - The wastewater treatment system should be fully evaluated to assess influent and effluent flows and treatment efficiency

Other PP/WM techniques that should be investigated for feasibility studies and possible short

4

and long term implementation are listed below

- Softener Regeneration - Instead of using sodium chloride, use a regeneration chemical that is less harmful to the environment, such as acetic acid and ammonium hydroxide

- Wastewater Treatment System Design Modification - Investigate design modifications, including replacing of existing equipment, and additional treatment that will enable recycle or reuse of treated wastewater

- Crude Oil Quality Control - Investigate the cost/benefit of obtaining a higher quality crude oil to reduce water consumption during refining and wastewater generation

Water Conservation Opportunities

As much as 73 to 97 m^3/d water savings could potentially result from the implementation of these techniques Those techniques that the facility could implement immediately are

- Cooling Tower Optimization

- Boiler Blowdown Reuse

- Steam Leak Prevention and Control

- Good Housekeeping

- Domestic Waste Treatment

- Barometric Condenser and Steam Vacuum Optimization

The following techniques require further investigation for feasibility studies and possible short and long term implementation

- Centrifuge Optimization

- Wastewater Reuse - for

  - Neutralization washwater

  - Softener Regeneration Wastewater

  - Barometric Condenser Cooling Water

- Live Steam

- Live Steam Heat Elimination
- Softener System Upgrade
- Water Cooling System Elimination
- Process Equipment Design Modifications

The recommendation selected for the detailed feasibility study was to upgrade the water softening system The purpose of this measure was not to improve boiler feed water quality but to reduce or eliminate the use of regeneration chemicals, which contribute significant amounts of TDS into the environment The selected recommendation is also consistent with that suggested in the Audit Report and with the primary concern of the WQICP, which is the protection of the quality of Jordan's water resources

It is noted that some of the options considered were expensive and may not be suitable for UMIC at the present time However, the intent of the study was to be comprehensive so that UMIC at a later date or other industries may be exposed to promising state-of-the-art water treatment technologies The selection of the state-of-the-art water demineralization system for implementation as a demonstation project at UMIC can provide a model in pollution reduction for industries across Jordan, since demineralization was a vital component of water treatment in almost all local industries The widespread use of these technologies could allow a significant reduction in the use of hazardous chemicals and the discharge of salts to the environment

TECHNICAL FEASIBILITY EVALUATION

Feasibility analyses were conducted for each of the following options

1. Optimized ion exchange (Eco-Tec) alone,
2. Continuous deionization alone,
3. Reverse osmosis followed by optimized ion exchange (Eco-Tec), and
4. Reverse osmosis followed by continuous deionization
5. Reverse osmosis followed by the existing water softener

The following is a description of State-of-the-Art treatment systems included in the above analyses

Optimized Ion Exchange In order to promote PP/WM, an alternative IX process is recommended the optimized IX process The optimized IX process is the result of efforts to improve the traditional ion exchange The Eco-Tec brand IX process provides an example of an optimized process which uses a short resin bed in conjunction with a

patented "recoflo" (reciprocating flow) system

Continuous Deionization The continuous deionization (CDI) process is a continuous water treatment process for producing high quality water, using ion-exchange membranes, resins, and electricity CDI technology provides the following benefits with respect to conventional IX processes

- Elimination of Chemicals
- Continuous Production
- Lower Operating Costs
- High Water Recovery

If used as a polishing deionization following RO (bulk deionization), typical removal rates are as follows

- Removes over 99% of remaining TDS
- Removes over 99% of remaining silica
- Removes over 90% of organics (TOC)
- Removes 95% of remaining CO_2

The CDI system has a product flow rate between 80 and 95 percent, with the remaining 5 to 20 percent is discharged as reject With RO pretreatment the product flow rate increases to closer to 95 percent

COST/BENEFIT ANALYSIS

The main costs associated with the proposed water treatment system were for purchasing the equipment Infrastructure for housing was not significant and significant amounts of additional piping and utilities were not required For reliability, two parallel trains of each system were proposed, each with capacity to supply 120 m^3/h At a cost of JD 98,600, adding RO to the existing softener was clearly the least expensive option The equipment cost for RO/CDI option was estimated at JD 230,900, which was less than RO/Eco-Tec option, at JD 327,500

Annual opererations and maintenance costs for the RO/Existing Softener was the lowest at JD 15,700, the RO/CDI was the second lowest at JD 20,800, and the RO/Eco-Tec was the highest at JD 23,600

Waste disposal costs were not included in the cost/benefit evaluation The waste disposal volume for the RO would be the same in all three cases, and therefore would not affect the analysis Similarly the waste flows for softeners, Eco-Tec, and CDI were similar, although CDI had the lowest TDS concentration

The *Table ES-1* provides an analysis of yearly total costs based on a 20 year project life and a 6 0 percent interest rate, including capital and operation and maintenance costs The least expensive alternative was the RO/Existing Softener, at JD 24,300 per year The cost for RO/CDI was JD 40,900 per year, and RO/Eco-Tec was JD 52,200 per year

ENVIRONMENTAL EVALUATION

By using the RO/Existing Softener or the RO/CDI water treatment system, the use of hazardous regeneration chemicals could be avoided High TDS reject brines would be created, as with all other water demineralizing systems, which need be properly disposed of The net discharge of TDS, however, would be lower than in the current situation

CONCLUSIONS

Three alternatives were found to be technically feasible RO/Existing Softener, RO/Eco-Tec, and RO/CDI The least expensive was RO/Exisitng Softener, followed by RO/CDI and RO/Eco-Tec The three alternatives created similar amount of waste flows, although RO/Existing Softener and RO/Eco-Tec created higher TDS than RO/CDI because of the regeneration chemicals RO/Eco-Tec, however, used approximately half the amount of chemicals of a conventional IX system

Given that UMIC had recently purchased two softener units and was achieving satisfactory water quality with this system, it did not appear necessary to immediately implement a new water system such as those discussed in this report However, it was recommended that groundwater supply quality be minitored for TDS When levels increased to a point where the softener system was no longer adequate, it was recommended that an RO system be installed to reduce discharge of TDS If levels reach the point where the RO/Existing Softener system was no longer adequate, it was recommended that the softener system be replaced with CDI units to eliminate the use of regeneration chemicals and reduce further the net discharge of TDS

RECOMMENDATIONS

It was recommended that a small unit for RO/CDI be installed as a demonstration project This unit could be installed in the existing boiler room in parallel to the existing water treatment system The implementation of this state-of-the-art water demineralization system at UMIC could provide a model in pollution reduction for industries across Jordan, since demineralization was a vital component of water treatment in almost all local industries

Table ES-1
Total Cost Analysis
Universal Modern Industries Company

RO / Existing Softener		RO / Eco-Tec		RO / CD	
Item	Cost (JD)	Item	Cost (JD)	Item	Cost (JD)
Initial Capital Cost	98,600	Initial Capital Cost	327,500	Initial Capital Cost	230,900
Annual Operation and Maintenance Cost	15 700	Annual Operation and Maintenance Cost	23 600	Annual Operation and Maintenance Cost	20,800
Equivalent Yearly Cost	24,300	Equivalent Yearly Cost	52,200	Equivalent Yearly Cost	44,900

* Based on a 20-year project life and 6 0% interest rate

TABLE OF CONTENTS

1 0	INTRODUCTION	1
1 1	Background	1
1 2	Objectives	1
1 3	Report Organization	2
2 0	SUMMARY OF AUDIT FINDINGS	3
2 1	Process and Facility Description	3
2 2	Audit Findings	3
2 2 1	Water Usage	3
2 2 2	Wastewater Discharges	4
2 3	Audit Conclusions	4
3 0	FEASIBILITY STUDY PROCESS	8
4 0	TECHNICAL FEASIBILITY EVALUATION	9
4 1	Existing Water Quality and Water Treatment System	9
4 1 1	Existing Water Quality	9
4 1 2	Existing Water Treatment System	9
4 2	Proposed Water Treatment Technologies	10
4 3	Feasibility Analysis	13
4 3 1	Optimized Ion Exchange Alone	13
4 3 2	Continuous Deionization Alone	13
4 3 3	Reverse Osmosis and Optimized Ion Exchange	14
4 3 4	Reverse Osmosis and Continuous Deionization	14
4 3 5	Reverse Osmosis and Exusting Water Softener	15
5 0	OPPORTUNITY COST/BENEFIT ANALYSIS	17
5 1	Economic Evaluation	17
5 2	Environmental Evaluation	17
6 0	CONCLUSIONS AND RECOMMENDATIONS	19
6 1	Conclusions	19
6 2	Demonstration Project Recommendations	19

APPENDICES

Appendix A	Screening of Recommendations
Appendix B	Brochure for Eco-Tech
Appendix C	Brochure for CDI

TABLES

Table 1	Potential Water Savings
Table 2	Quality of Raw Well Water (at JPRC)
Table 3	Comparison of Capital Costs
Table 4	Comparison of Annual Operation and Maintenance Costs
Table 5	Total Cost Analysis

FIGURES

Figure 1	Water and Wastewater Flow Diagram
Figure 2	Location of Existing Water Treatment Plant
Figure 3	Conceptual Layout

1 0 INTRODUCTION

This report presents feasibility studies (FS) for pollution prevention, waste minimization (PP/WM) and water conservation for the United Modern Industries Company, Ltd (UMIC) The feasibility study is based on the PP/WM recommendations provided in the Industrial Audit Report for Vegetable Oil Refining Industry, Universal Modern Industries Co , Ltd (USAID Report 3114-95-2b-29, April 1995), performed by Science Applications International Corp in January, 1995 The report is divided into findings and recommendations from the audit, screening process, feasibility analyses, and final conclusions and recommendations

1 1 Background

Development Alternatives, Inc (DAI) under Contract No 278-0288-00-C-4026-00 with the United States Agency for International Development (USAID) is performing an Industrial Wastewater Discharge Prevention Program (IWDPP) in Amman, Jordan This Program is one of four components of the Water Quality Improvement and Conservation Project (WQICP) funded by USAID This program is being performed by DAI with full coordination between the Ministry of Water and Irrigation (MWI) and the Amman Chamber of Industry (Chamber) Harza Consulting Engineers and Scientists (Harza), Chicago, United States (U S), was retained by DAI to lead the IWDPP The Royal Scientific Society (RSS) of Amman, Jordan was selected as a local consultant to assist Harza with the IWDPP This Program includes conducting the PP/WM audits, feasibility studies, and designing demonstration facilities at selected industrial facilities

The PP/WM techniques are defined as any techniques to prevent or reduce waste generation by source reduction or recycling activities These activities must reduce either the volumes or the concentrations of pollutants generated prior to treatment, storage, or disposal of the waste

Based on a ranking methodology, the PP/WM Committee selected ten industries with potential needs for PP/WM audits, as the first step of the IWDPP The purpose of the audits was to assist the industries in the Amman-Zarqa Basin in assessing pollution problems and developing alternative solutions to achieve desired levels of PP/WM, water conservation, and wastewater treatment appropriate for the selected industry The next step in the IWDPP is to further develop the most promising options for PP/WM revealed through the audit process by performing a FS This report provides the FS for the vegetable oil refining industry and also outlines potential demonstration projects that may be carried out within the next phase of the IWDPP

1 2 Objectives

The objective of the FS is to evaluate the technical, financial, and logistical feasibility of the most promising PP/WM and water conservation techniques identified in the Audit Report

1 3 Report Organization

This report contains an introduction, sections on Summary of Audit Findings (from the previous PP/WM Audit Report) Feasibility Study Process Technical Feasibility Evaluation, Opportunity Cost/Benefit Analysis and Conclusions and Recommendations The recommendations provide suggestions for subsequent demonstration projects

B

2 0 SUMMARY OF AUDIT FINDINGS

The PP/WM audit was conducted on January 7 and 14, 1995 by Science Applications International Corporation (SAIC), and the audit report was submitted by SAIC in April, 1995 The main findings and recommendation from this report are provided below

2 1 Process and Facility Description

The UMIC facility refines four oils refined, bleached, and deodorized (RBD) palm oil, RBD palmoline, semi-degummed corn oil, and semi-degummed soya oil The current production rate is 170 to 180 tons per day (T/day) The UMIC facility operates both chemical and physical refining processes Process operations consist of

- Crude oil transfer to storage tanks,
- Chemical refining operations degumming and neutralization, bleaching, and deodorization,
- Physical refining by steam stripping,
- Cooling and filtering, and
- Packaging

2 2 Audit Findings

2.2 1 Water Usage

The UMIC facility receives its water from the Zarqa Free Zone groundwater wells Most, approximately 72 percent, of the water the facility uses is first treated using an ion-exchange unit The four largest consumptions of water at the facility are for

- Steam for refining and producing vacuum, and cooling water for the barometric condensers, 41 m^3/day,
- Washing the oil in the neutralization operation, 24 m^3/day,
- Boiler blowdown, 20 m^3/day, and
- Cooling the heat exchangers, 20 m^3/day

Other water uses that total approximately 42 m^3/day include floor and equipment cleaning, live and closed-loop steam heating, laboratory tests, chemical solutions, spill clean-up, and sanitary

The UMIC facility uses approximately 147 m^3/day of groundwater, most of which is treated with a water softener before being used for steam generation, process washwater, and cooling purposes In general, water use at the facility is not excessive (1 2 m^3/T of refined oil), however, opportunities for conservation do exist

With the addition of the physical refining operation, the quantity of cooling water has

14

increased This is overloading the cooling tower so that the facility is removing the cooling water and refilling the cooling system with fresh water The daily average blowdown is estimated at 4 2 m^3/day, but may be much higher since the facility hauls in fresh water and hauls away the contaminated cooling water The frequency of hauling, the number of tanker trucks, or the quantity hauled is unknown

2 2 2 Wastewater Discharges

The major wastewaters generated at the facility are

- Neutralization washwater, 24 m^3/day,
- Boiler blowdown, 20 m^3/day,
- Floor and equipment washwater, 10 m^3/day,
- Steam condensate from tanker truck heating, 8 4 m^3/day, and
- Softener regeneration backwash, 6 m^3/day

Other wastewaters that total approximately 14 2 m^3/day include blowdown from the barometric condenser and heat exchanger cooling towers, spill clean-up, and sanitary Typical pollutant parameters include fats, oil, and grease (FOG), biochemical oxygen demand (BOD_5), chemical oxygen demand (COD), total suspended solids (TSS), and total dissolved solids (TDS) ***Figure 1*** provides a water and wastewater flow diagram

Steam losses to the air occur through leaky flanges, valves, and pipes Steam condensate and cooling water leaks from equipment collect on the floors Frequent spills occur in the following areas

- Tanker truck unloading,
- Caustic soda solution mixing, and
- Filling area from the filling machines and leaking containers

2 3 Audit Conclusions

The UMIC facility already practices some PP/WM and water conservation practices such as recirculating the cooling water Additional opportunities identified during the audit are summarized below Some actions that the facility should initiate immediately are

- <u>Operation of the Wastewater Treatment System</u> - The wastewater treatment system should be fully evaluated to assess influent and effluent flows and treatment efficiency In particular, monitoring of the hydraulic and organic loading to each of the units should be conducted to evaluate the performance of each unit Additionally, an assessment of the need for modifications to the operation of the treatment system should be conducted This assessment should also evaluate the need to segregate and separately treat process watewaters

15

Other PP/WM techniques that should be investigated for feasibility studies and possible short and long term implementation are listed below

- Softener Regeneration - Instead of using sodium chloride, use a regeneration chemical that is less harmful to the environment, such as acetic acid and ammonium hydroxide This chemical substitution would reduce the high concentrations of sodium and chloride salts in the wastewater

- Wastewater Treatment System Design Modification - Investigate design modifications, including replacing of existing equipment, and additional treatment that will enable recycle or reuse of treated wastewater

- Crude Oil Quality Control - Investigate the cost/benefit of obtaining a higher quality crude oil to reduce water consumption during refining and wastewater generation Work with suppliers, shippers, and transport companies to establish standard shipping and transport practices that would reduce the time in-shipment and storage, the number of transfers that occur, and the oxidation that occurs during shipping and storage

Water Conservation Opportunities

The water conservation opportunities are summarized below ***Table 1*** provides potential techniques and the estimated savings from water conservation As much as 73 to 97 m^3/d water savings could result from the implementation of these techniques

Those techniques that the facility could implement immediately are

- Cooling Tower Optimization -Assess design or operational modifications for the current cooling tower or explore new cooling tower designs to minimize the evaporative losses and increase the concentration cycle

- Boiler Blowdown Reuse - Reuse boiler blowdown as floor washing and spill cleanup water

- Steam Leak Prevention and Control - Implement a more rigorous preventative maintenance program to prevent leaks and a rapid response repair program to fix leaks as soon a they occur

- Good Housekeeping - Develop and implement floor cleaning and spill cleaning procedures that focus on water conservation

- Domestic Waste Treatment - Reduce domestic water use by employee awareness and installation of water conservation equipment

- Barometric Condenser and Steam Vacuum Optimization - Evaluate the current process operational procedures to optimize reductions in steam and cooling water More process control instrumentation, more accurate instrumentation, of faster feedback could enable greater process control that would minimize water losses or decrease water usage

The following techniques require further investigation for feasibility studies and possible short and long term implementation

- Centrifuge Optimization - The centrifuge could be optimized to avoid build up of soapstock within the centrifuge to eliminate cleaning of the centrifuges every 24 hours

- Wastewater Reuse - Investigate reuse of the following wastewaters

  - Neutralization washwater - Investigate options for reducing the generation of wastewater and reuse of washwater from the second and third centrifuges in the neutralization, as identified in this report

  - Softener Regeneration Wastewater - Treat the wastewater using reverse osmosis and reuse

  - Barometric Condenser Cooling Water - Treat the cooling water to recover fatty acid material and reuse as cooling water

  - Live Steam - Reuse the condensate resulting from the live steam heating of the tanker trucks as washwater in the neutralization operation

Live Steam Heat Elimination - Eliminate use of live steam for heating Use a closed loop heating coil in the tanker trucks and acidification tanks instead of live steam

Softener System Upgrade - Continue with plans to install a larger capacity softener unit A unit that is optimally sized for the facility's operations will reduce the frequency of regeneration Use a newer state-of-the-art ion-exchange resin system that is regenerated with less solution and, therefore, generates a smaller volume, more concentrated wastewater

Water Cooling System Elimination - Investigate the use of a non-water cooling system for the heat exchangers

Process Equipment Design Modifications - Explore design modification to the process units, the barometric condensers, and the steam vacuum system that would decrease the overall water quantity (cooling water and steam)

3 0 FEASIBILITY STUDY PROCESS

The recommendations provided in the Audit Report were screened to identify the most promising alternative for PP/WM, for subsequent detailed analyses in feasibility studies The recommendations of the audit report and comments on the feasibility of each are provided in ***Appendix A***

The detailed evaluation of the Technical Feasibility of the selected option is provided in Section 4 0 Section 5 0 provides an Opportunity Cost/Benefit Analysis, and Section 6 0 provides Conclusions and Recommendations

The recommendation selected for the detailed feasibility study is to upgrade the water softening system The purpose of this measure is not to improve boiler feed water quality but to reduce or eliminate the use of regeneration chemicals, which contribute significant amounts of TDS into the environment The selected recommendation is also consistent with that suggested in the Audit Report The objective of the feasibility study is consistent with the primary concern of the WQICP, which is the protection of the quality of Jordan's water resources

It is noted that some of the options considered are expensive and may not be suitable for UMIC at the present time However, the intent of the study is to be as comprehensive as possible so that UMIC at a later date or other industries may be exposed to some promising state-of-the-art water treatment technologies The selection of the state-of-the-art water demineralization system for implementation as a demonstation project at UMIC can provide a model in pollution reduction for industries across Jordan, since demineralization is a vital component of water treatment in almost all local industries The widespread use of these technologies could allow a significant reduction in the use of polluting chemicals and the discharge of salts to the environment

4 0 TECHNICAL FEASIBILITY EVALUATION

In this section feasibility analyses are conducted for each of the following options

1 Optimized ion exchange (Eco-Tec) alone,
2 Continuous deionization alone,
3 Reverse osmosis followed by optimized ion exchange (Eco-Tec), and
4 Reverse osmosis followed by continuous deionization
5 Reverse osmosis followed by the existing water softener

The following sections discuss the existing water quality and treatment facilities at UMIC Evaluations of the economic and environmental feasibility of the selected options listed above follow

4 1 Existing Water Quality and Water Treatment System

4 1 1 Existing Water Quality

The UMIC currently uses approximately 150 m^3/day of well water obtained from a well located in the Zarqa Free Zone at the Jordan Petroleum Refinery Company (JPRC) The water quality from this area water is characteristically high in salinity A single sample of UMIC raw well water taken on August 6, 1995 indicates the following

Chloride as NaCl (mg/l)	580
TDS (mg/l)	760
Total Hardness (mg/l)	290
pH	7 4

Testing previously performed by Harza on 11/12/94 on three wells at JPRC indicated electroconductivity ranging from 2300 to 3600 uS/cm Additional water quality data obtained from other wells of the same well field at JPRC indicates very high levels of electroconductivity, and a tendency to increase with time According to a previous report for JPRC conducted by COWIconsult in 1994, electroconductivity has increased from 460 in 1971 to 3,300 uS/cm in 1992 Water quality data for JPRC wells is provided in ***Table 2***

Given the current high levels of salinity and the increasing trend, it is expected that salinity will be an increasingly critical water treatment issue in future years

4 1 2 Existing Water Treatment System

Approximately 120 m^3/day of water usage at UMIC (72%) is treated at an ion exchange (IX) water softening unit Of this amount, approximately 95 m^3/d is

used as boiler feed water and the remainder is used as neutralization washwater Two new softening units were recently installed, with the following characteristics

Capacity (grains)	600,000
Resin volume (l)	560
Treatment capacity (m^3)	100

With the given treatment capacity, the frequency of regeneration is approximately once per day The regeneration water is discharged to an outside collection pit and hauled by trucks for disposal on land near the facility

The existing water softening plant is located in the boiler house, as shown in *Figure 2* The dimensions of the boiler plant house are 10 meters by 10 meters, and approximately 50 percent of the area is available for installation of water treatment systems

4 2 Proposed Water Treatment Technologies

The water quality needs for UMIC are driven by the boiler feed requirements, which include demineralization For the other main treated water use, neutralization washwater, requirements are less stringent, and involve hardness removal only Since most of the treated water (approximately 75 percent) is used for boiler feed, it will be assumed that a single treatment plant will used to provide for both purposes, producing boiler quality water The total required flow is approximately 120 m^3/d

The following is a description of technologies that will be discussed further in the technical feasibility section

Reverse Osmosis Reverse osmosis (RO) is a well-known and proven technology for demineralizing brackish water The principle used involves the separation of water from a saline solution using a semipermeable membrane and hydrostatic pressure While RO is effective in removing ions, RO removal efficiency is not adequate for treatment of water for boiler feed and further polishing is required when used for this purpose Polishing is typically performed by ion exchange or other methods

Conventional Ion Exchange The ion exchange process (IX) removes unwanted ions from water by transferring them to a solid media, which in return gives back an equivalent amount of desirable ions The media, also called ion exchanger or exchange skeleton, has a limited capacity for ion storage and eventually becomes saturated When this occurs, the exhanger must be regenerated by washing with a strong regenerating solution which contains the desirable species of ions This is performed in a cyclical process which includes

backwashing, regeneration, rinsing, and service

Disadvantages associated with the traditional ion-exchange systems are as follows

1. Co-current regeneration exposes water to highest concentration of contaminants prior to leaving vessel
2. Ion exchange bed has more capacity than that actually used, leaving a residual of contaminating ions on the resins, and
3. Chemical utilization is high, due to inefficient regeneration

Optimized Ion Exchange In order to promote PP/WM, an alternative IX process is recommended the optimized IX process The optimized IX process is the result of efforts to improve the traditional ion exchange The Eco-Tec brand IX process provides an example of an optimized process which uses a short resin bed in conjunction with a patented "recoflo" (reciprocating flow) system, providing the following differences with respect to conventional ion-exchange columns

- Short Bed Height The resin columns are wide and short, rather than tall and narrow This allows the entire bed length to be within the ion-exchange zone at any point in time, providing efficient use of the ion-exchange resins A consequence of this setup, however, is shorter run times between regenerations

- Fine Mesh Resins The Eco-Tec system uses a finer mesh than is typically used in conventional ion exchange systems This increases the specific surface of the mesh, reducing the length of the exchange zone and allowing the use of higher flow rates Additionally, smaller beads are physically stronger and rinse more effectively

- Packed Beds Packed resin beds insure that proper distribution is provided and that the ion exchange profile is not disturbed Eliminating column freeboard reduces mixing and dilution during regeneration, decreasing required rinsing

- Counterflow Regeneration Counter flow regeneration is used in the Eco-Tec system This rinsing technique reduces the amount of chemicals required, since the regenerant flows from the least spent resin towards the most spent

- Low Exchanger Loading Typically, a low percentage (around 25%) of the total exchange capacity of a resin is used in a

normal cycle By using only the most available exchange sites, those near the surface of the resin beads, the regenerant kinetics are improved and regenerant consumption is minimized

- Shorter Regeneration Time While conventional ion exchange systems typically take 3 to 4 hours to regenerate, the Eco-Tec system can be regenerated in returned on-line in approximately 10 minutes This short regeneration time allows for smaller storage facilities

Optimized IX systems such as Eco-Tec typically has a product flow rate rates of between 90 and 95 percent, with the remaining 5 to 10 percent discharged as reject With RO pretreatment the product flow rate is closer to 95 percent Chemical consumption for the Eco-Tec system is approximately half of that of conventional IX systems, and liquid waste is approximately 40 percent less

Continuous Deionization The continuous deionization (CDI) process is a continuous water treatment process for producing high quality water, using ion-exchange membranes, resins, and electricity

Continuous electrodeionization technology differs from electrodialysis In electrodialysis, ion-depleting streams between membranes have high electrical resistance, and therefore require high voltages to be effective, particularly as the salt concentration increases The CDI technology has low electrical resistance because the spaces between the membranes are filled with ion exchange resin which provide a more efficient ion transfer Direct current is used as a driving force for removing ions from the raw water while continuously regenerating the resin pack Elecrodialysis is typically used to bring water with high salt concentrations of 1,000 to 10,000 ppm down to several hundred ppm, whereas CDI is used to bring waters with salt concentrations of 10 to 1,000 ppm down to 1 ppm or less

CDI technology provides the following benefits with respect to conventional IX processes

- Elimination of Chemicals
- Continuous Production
- Lower Operating Costs
- High Water Recovery

If used as a polishing deionization following RO (bulk deionization), typical removal rates are as follows

- Removes over 99% of remaining TDS
- Removes over 99% of remaining silica
- Removes over 90% of organics (TOC)
- Removes 95% of remaining CO_2

The CDI system has a product flow rate between 80 and 95 percent, with the remaining 5 to 20 percent is discharged as reject With RO pretreatment the product flow rate increases to closer to 95 percent

4 3 Technical Feasibility

Five options for feasibility analysis are discussed in this section Optimized IX alone, CDI alone, RO and Optimized IX, RO and CDI, and RO and Existing Softener developed

4 3 1 Optimized Ion Exchange Alone

The IX process is typically feasible for demineralizing water with low TDS or as a polishing stage for pretreated water The advantages of the optimized IX system over the conventional system were discussed previously, but one main advantage is that they require approximately half the amount of regeneration chemicals that conventional IX systems use A disadvantage of these systems compared to standard softeners is that they are somewhat complex and require the use of hazardous chemicals (sulfuric acid and sodium hydroxide) for regeneration A brochure for the Eco-Tec system is provided in ***Appendix B***

Given the water characteristics at UMIC it does not appear desirable to use IX alone without any pretreatment In particular, the Eco-Tec system is not cost-effective for water streams with TDS above 750 mg/l Therefore, using optimized IX alone without pretreatment is not technically feasible and will not be further considered

4 3 2 Continuous Deionization Alone

The CDI presents a very desirable process that continuously produces high levels of treatment without the use of any regeneration chemicals The CDI system does produce a reject stream, however, which requires proper disposal The units are compact and require low maintenance, and have a low operating cost The

capital cost is typically less than IX A brochure for CDI is provided in Appendix C

The efficiency of these units with low water quality is questionable, and in the case of UMIC it is expected that adequate boiler quality water will not be achieved by CDI alone and a RO unit will be required as pretreatment Therefore, CDI alone without pretreatment is not technically feasible and will not be further considered

4 3 3 Reverse Osmosis and Optimized Ion Exchange

The RO provides pretreatment by bulk deionization, which typically reduces the TDS concentration in the water by 90 percent Therefore, by pretreating with RO the use of IX regenerant will decrease by approximately 90 percent The drawback of using RO, however, is that a new wastewater steam is created the RO reject, which normally is in the range of 15 to 25 percent of the treated water The ion exchange regeneration water will also require adequate disposal A conceptual layout for RO/IX is provided in ***Figure 3***

The proposed RO and IX systems are skid mounted and require relatively little space for installation In order to treat 120 m^3/d with RO and IX, the RO unit is approximately 4 3 meters long by 1 1 meter deep by 2 2 meters high The Eco-Tec unit for this flow is approximately 1 8 meters long by 1 6 meter deep by 2 0 meters high There is adequate space available in the existing boiler room to accommodate this equipment, and it is assumed that adequate power and piping is available Given the above, this water treatment option is considered technically feasible

4 3 4 Reverse Osmosis and Continuous Deionization

As in the previous option, RO provides the bulk deionization and allows the CDI to operate as a polishing treatment Both the RO and the CDI will produce a reject waste stream that requires proper disposal No chemicals, however, are required The operation will be continuous and require less storage of treated water It is recommended that two CDI units be installed for greater reliability A conceptual layout for RO/CDI is provided in ***Figure 3***

The proposed RO and CDI systems are skid mounted and require relatively small space for installation In order to treat 120 m^3/d with RO and IX, the RO unit is approximately 4 3 meters long by 1 1 meter deep by 2 2 meters high The CDI unit for this flow is approximately 1 0 meters wide by 1 4 meter deep by 1 1 meters high There is adequate space available in the existing boiler room to accommodate the two sets of equipment, and it is assumed that adequate power and piping is available Given the above, this water treatment option is

considered technically feasible

When making a technical comparison of RO/Optimized IX and RO/CDI, the following should be kept in mind

- CDI has few moving parts, while IX has a complex mechanical operating system for regeneration,
- CDI no down time for regeneration, while IX does and therefore requires storage,
- CDI requires no chemical usage, while IX requires hazardous chemicals,
- CDI is capable of achieving water quality similar to IX,
- The operation and maintenance costs for CDI are lower than IX,
- The capital costs for CDI are lower than for IX

The above suggests that the CDI system holds some technical and economic advantages over Eco-Tec

4 3 5 Reverse Osmosis and Existing Water Softener

As mentioned previously, UMIC currently treats water for boiler feed and neutralization washwater, using two recently purchased water softening units which are properly sized for the facility The units are regenerated with a strong sodium chloride (NaCl) solution, which is discharged to a collection tank and then trucked off site for disposal In order to reduce the quantity of NaCl solution used and ultimately discharged to the environment, an RO unit can be used to provide bulk deionization This will reduce the ion load on the softener and thereby reduce regeneration frequency It should, however, be noted that RO reject provides a new waste stream of low TDS but high volume water Ultimately, the net amount of TDS produced will be less than with the softener alone, although water consumption will be higher

Groundwater quality in the Zarqa Basin, and in particular around the JPRC where water supply for UMIC is obtained, has shown a tendency to increase in TDS (see COWIconsult Industrial Pollution Control Project report for the nearby JPRC facility , June, 1994, Vol 3, pg 38, which states that groundwater TDS at JPRC has increased from 460 μS/cm in 1971 to 3,300 μS/cm in 1992) Therefore, the loading on the softener unit is expected to increase over time and may eventually exceed the treatment capabilities of the softener Therefore, the RO pretreatment unit may become a necessity over time

The proposed RO units are similar to those discussed in the other alternatives There is adequate space available to install the units, alongside the existing

softening system, which would continue to be utilized Therefore, this alternative is considered technically feasible

5 0 OPPORTUNITY COST/BENEFIT ANALYSIS

5 1 Economic Evaluation

The main costs associated with the proposed water treatment system are for purchasing the equipment Infrastructure for housing is not considered to be significant, given the available space, and significant amounts of additional piping and utilities are not expected to be required The capital costs for the three alternatives are provided in ***Table 3*** For reliability, two parallel trains of each system are proposed, each with capacity to supply 120 m^3/h It is noted, however, that a reduction in facility water requirements can be obtained by implementing the PP/WM and water conservation measures indicated in the report, and that this will also reduce the size of the water treatment units It can be seen from this table that, at a cost of JD 98,600, adding RO to the existing softener is clearly the least expensive option It is also evident that in addition to being technically advantageous, the equipment cost for RO/CDI option, estimated at JD 230,900, is also less than RO/Eco-Tec, at JD 327,500

Annual opererations and maintenance costs for the three alternatives are provided in ***Table 4*** It is noted, however, that a reduction in water requirements can be obtained by implementing the PP/WM and water conservation measures indicated in the report, and that this will also reduce the size of the water treatment units It can be seen that the RO/Existing Softener alternative has the lowest annual operation and maintenance cost, at JD 15,700, the RO/CDI is the second lowest at JD 20,800, and the RO/Eco-Tec is the highest at JD 23,600

It is noted that in the above assessment waste disposal costs have not been included The waste disposal volume for the RO will be the same in all three cases, and therefore does not affect the analysis For Eco-Tec (following RO) the waste flow is a flow of approximately 60 $m^3/1000m^3$, while for CDI (following RO) the waste volume is 50 to 80 $m^3/1000m^3$ The waste flow from the existing new softener is expected to be similar Therefore, the cost of waste disposal will not have an impact in the comparison of the alternatives

Table 5 presents an analysis of yearly total costs based on a 20 year project life and a 6 0 percent interest rate, including capital and operation and maintenance costs The least expensive alternative is the RO/Existing Softener, at JD 24,300 per year The other alternatives are RO/CDI at JD 40,900 per year, and RO/Eco-Tec at JD 52,200 per year

5.2 Environmental Evaluation

By using the RO/Existing Softener or the RO/CDI water treatment system, the use of polluting regeneration chemicals can be avoided High TDS reject brines will be created, as with all other water demineralizing systems, which must be properly disposed of The

net discharge of TDS, however, will be lower than the current situation

6 0 CONCLUSIONS AND RECOMMENDATIONS

6 1 Conclusions

Three alternatives were found to be technically feasible RO/Existing Softener, RO/Eco-Tec and RO/CDI The least expensive is RO/Exisitng Softener, followed by RO/CDI and RO/Eco-Tec The three alternatives create similar amount of waste flows, although RO/Existing Softener and RO/Eco-Tec create higher TDS than RO/CDI because of the regenration chemicals RO/Eco-Tec, however, uses approximately half the amount of chemicals of a conventional IX system

Given that UMIC has recently purchased two softener units and is achieving satisfactory water quality with this system, it does not appear necessary to immediately implement a new water system such as those discussed in this report However, it is recommended that groundwater supply quality be minitored for TDS When levels increase to a point where the softener system is no longer adequate, it is recommended that an RO system be installed to reduce discharge of TDS If levels reach the point where the RO/Existing Softener system is no longer adequate, it is recommended that the softener system be replaced with CDI units to eliminate the use of regeneration chemicals and reduce further the net discharge of TDS

6 2 Demonstration Project Recommendation

It is recommended that a small unit for RO/CDI be installed as a demonstration project This unit can be installed in the existing boiler room in parallel to the existing water treatment system

TABLES

Table 1 - Potential Water Savings

UMIC

Production Operation	Water Conservation Technique	Current Water Consumption (m^3/day)	Projected Water Consumption (m^3/day)	Projected Water Savings (m^3/day)	Percent Decrease in Total Water Consumption
Clean cooling tower	1 Closed-loop air radiator cooling system	20	0 0	20	13 6
Chemical refining	2.a. Treat and reuse all washwater	25.35	5	20.35	13 8
	2.b Treat second centrifuge washwater and reuse in third centrifuge	14	6	8	5 4
	2.c. Reuse third centrifuge washwater in second centrifuge	25.35	20 35	5	3 4
Boiler	3 Boiler blowdown reuse after treatment	21 1	4.2	16 9	11.5
Process Equipment	4 Modify design or optimize operations	120	108	12	8 0
Tanker Truck	5 Capture and reuse live steam or eliminate live steam heating of tanker trucks	8 4	0 0	8 4	5 7
Floor washing	6 Reuse the boiler blowdown without treatment	5	0 0	5 0	3 4
Cooling tower	7 Optimize to decrease evaporative losses and increase concentration cycle	47 7	43 0	4 7	3 2
Softener	8 Reuse treated regeneration wastewater	6	2	4	2 6
Cooling tower	9 Treat bleed-off and reuse	4.2	0.2	4 0	2.6
Softener	10 Increase capacity	6	4	2	1.3

Mainte-nance and sanitary	11 Use dry cleaning methods and install water conservation devices	10	8	2	1 4
Acidifi-cation	12 Eliminate live steam heating	1 4	0.0	1 4	1.0
Spill	13 Improve spill control and clean-up	4	3	1	0 7
Centrifuge and filter	14 Treat and reuse washwater	1 0	0 0	1.0	0 7
Steam System	15 Reduce steam leaks	1 0	0.5	0.5	0.35
Centrifuge	16 Optimize to reduce cleaning frequency	1 0	0 7	0.3	0.2
Total Savings	-	-	50 - 73	73 - 97	49 - 66

TABLE 2: QUALITY OF RAW WELL WATER

Parameter (units)	Sample Source[1,2]		
	Well No. 7	Well No. 10	Well No. 4
pH	7 14	7 41	7 33
Specific Conductance (µS/cm)	3310	2260	3600
Suspended Solids (mg/l)	8	10	14
Chemical Oxygen Demand (mg/l)	26	26	74
Total Organic Carbon (mg/l)	3 34	2 11	2 39
K. Nitrogen (mg/l)	1 12	1 68	1 96
Ammonia (mg/l)	0 38	0 13	0 50
Benzene (µg/l)	<0 05	<0 05	<0 05
Ethylbenzene (µg/l)	<0 05	<0 05	<0.05
Toluene (µg/l)	<0 05	<0 05	<0 05
Trichloroethylene (µg/l)	1 24	4 14	0 22
Tetrachloroethene (µg/l)	0 36	0 75	0 12
1, 3 - Dichlorobenzene (µg/l)	<0 10	<0 10	<0 10
Cyanide (µg/l)	<0 02	<0 02	<0 02
Cadmium (µg/l)	<0 01	<0 01	0 01
Nickel (µg/l)	0 01	<0.01	<0 04
Lead (µg/l)	<0 01	<0 01	<0 01

[1] Samples collected 11/12/94

Table 3
COMPARISON OF CAPITAL COSTS
Universal Modern Industries Company

RO / Existing Softener		RO / Eco-Tec		RO / CDI	
Item	Cost (JD)	Item	Cost (JD)	Item	Cost (JD)
A. Reverse Osmosis (2 units 120 m3/day)	48,300	A. Reverse Osmosis (2 units 120 m^3/day)	48,300	A Reverse Osmosis (2 units 120 m3/day)	48 300
		B Eco-Tec IX Demineralizer (2 units 120 m3/day)	96 600	B CDI Demineralizer (2 units 120 m3/day)	64 900
		C Waste Neutralization System (2 units)	5 100		
		D Product water tank feed pump, acid and caustic supply tanks	11 900		
B Shipping of Imported Equipment (20% of A)	9 700	E Shipping of Imported Equipment (20% of A,B,C)	30 000	C Shipping of Imported Equipment (20% of A,B)	22 600
C Installation (50% of A)	24,200	F Installation (50% of A B C D)	81 000	D Installation (50% of A,B)	56 600
D Subtotal (A to C)	82 200	G Subtotal (A to F)	272 900	E Subtotal (A to D)	192 400
E Contingencies (20% of D)	16 400	H Contingencies (20% of G)	54 600	F Contingencies (20% of E)	38 500
Total	98,600	Total	327,500	Total	230,900

HARZA TABVREV1.XLS
10/24/95 5:01 PM

34

Table 4
COMPARISON OF ANNUAL OPERATION AND MAINTENANCE COSTS
Universal Modern Industries Company

1 RO / Existing Softener		2. RO / Eco-Tec		3. RO / CDI	
Item	Cost (JD)	Item	Cost (JD)	Item	Cost (JD)
A Labor (1 mechanical eng , 1 tech)	7 800	A Labor (1 mechanical eng 2 tech)	9,600	A Labor (1 mechanical eng. 2 tech)	9 600
B Energy	3 000	B Energy	3,600	B Energy	3 500
C Chemical Usage	0	C Chemical Usage	2,400	C Maintenance	
D Maintenance		D Maintenance		1 RO Membranes	1 600
RO Membranes	1 800	1 RO Membranes	1 600	2 CDI Cell Pack	2 500
2 Softener Resins	1 700	2 IX Resins	1 700	3 Other (3% of equipment cost)	3 400
3 Other (3% of equipment cost)	1,400	3 Other (3% of equipment cost)	4 500		
Total	15,700	Total	23,600	Total	20,000

Notes:

A. Mechanical Engineer at JD 500/month=6,000/year
Technician at JD 150/month=1 800/year

B Plant operates during 24 hr*6 days 52 weeks=7488 h/year
RO Energy =10 6kw*7488=79 400 kw/year
Add 20% for other energy useges =15 900 kwh/year
Total energy=95 300 kwh/year
Energy cost =JD 0 032/kwh
Total Energy Cost=JD 3 000/year

C NaCl Solution cost is negligible compared to other costs
RO Antiscalant cost is negligible compared to other costs

D1 RO
Number of Membrane cartridges/unit: 6
Cost per cartridge JD 910
Frequency of replacement: 3 years
Annual Cost = 6*910/3= JD 1 800

D2 Assumed same as in Option 2 RO/Eco-Tec

D3 3% on Item A of Capital Cost table

Notes:

A. Mechanical Engineer at JD 500/month=6 000/year
Technician at JD 150/month=1 800/year

B RO Same as in Option 1 RO / Existing Softener=79 400 kw/year
Eco-Tec at 1.2 kwh/1000 gal=120m3/day*365day/year*
*0 264 (1000-gal/m3)=13 900
Energy =79 400+13 900=93 300 kw/year
Add 20% for other energy usages =18 700 kwh/year
Tost Energy=112,000
Energy cost =JD 0 032/kwh
Total Energy Cost=JD 3 600/year

C H_2SO_4 at 508 kg/1000 m3*(120*6*52/1000)m3/year*
JD 0 061/kg-100%=JD 1 200
NaOH at 120 kg/1000 m3*(120*6*52/1000)m3/year*
JD 0 274/kg-100%=JD 1,200

D1 Same as in Option 1 RO / Existing Softener = JD 1 800 /year

D2 Cost per resin replacement JD 8 300
Frequency of resin replacement: 5 years
Annual Cost=JD 8 300/ years= JD 1 700

D3 3% on items A,B C of Capital Cost table

Notes:

A Mechanical Engineer at JD 500/month=6 000/year
Technician at JD 150/month=1 800/year

B RO Same as in Option 1 RO / Existing Softener=79,400 kw/year
CDI at 1 kw/1000 gal=120m3/day*365day/year*0.264 (1000-gal/m3)=
11 600 kwh/year/
Energy =10 6*7488+11 600=91 000 kw/year
Add 20% for other energy usages =18,200 kwh/year
Total energy=109,200 kwh/year
Energy cost =JD 0.032/kwh
Total Energy Cost=JD 3 500/year

C1 RO
Same as in Option 1 RO / Existing Softener = JD 1 800 /year

C2. CDI
Number of cell pairs/unit:120
Cost per cell pair JD 105
Frequency of replacement 5 years (when preceded by RO)
Annual Cost=JD 105*120 cells/5 years= JD 2 500

C3 3% on items A,B of Capital Cost table

HARZA FABVREV1 XLS
10/24/91 5:01 PM

BEST AVAILABLE COPY

35

Table 5
Total Cost Analysis
Universal Modern Industries Company

RO / Existing Softener		RO / Eco-Tec		RO / CDI	
Item	Cost (JD)	Item	Cost (JD)	Item	Cost (JD)
Initial Capital Cost	98,600	Initial Capital Cost	327 500	Initial Capital Cost	230 900
Annual Opera. on and Maintenance Cost	15 700	Annual Operation and Maintenance Cost	23 600	Annual Operation and Maintenance Cost	20 600
Equivalent Yearly Cost	24,300	Equivalent Yearly Cost	62,200	Equivalent Yearly Cost	40,900

* Based on a 30-year project life and 6 0% interest rate

BEST AVAILABLE COPY

HABZA 7ABVREV1 XLS
10/24/95 5 01 PM

36

FIGURES

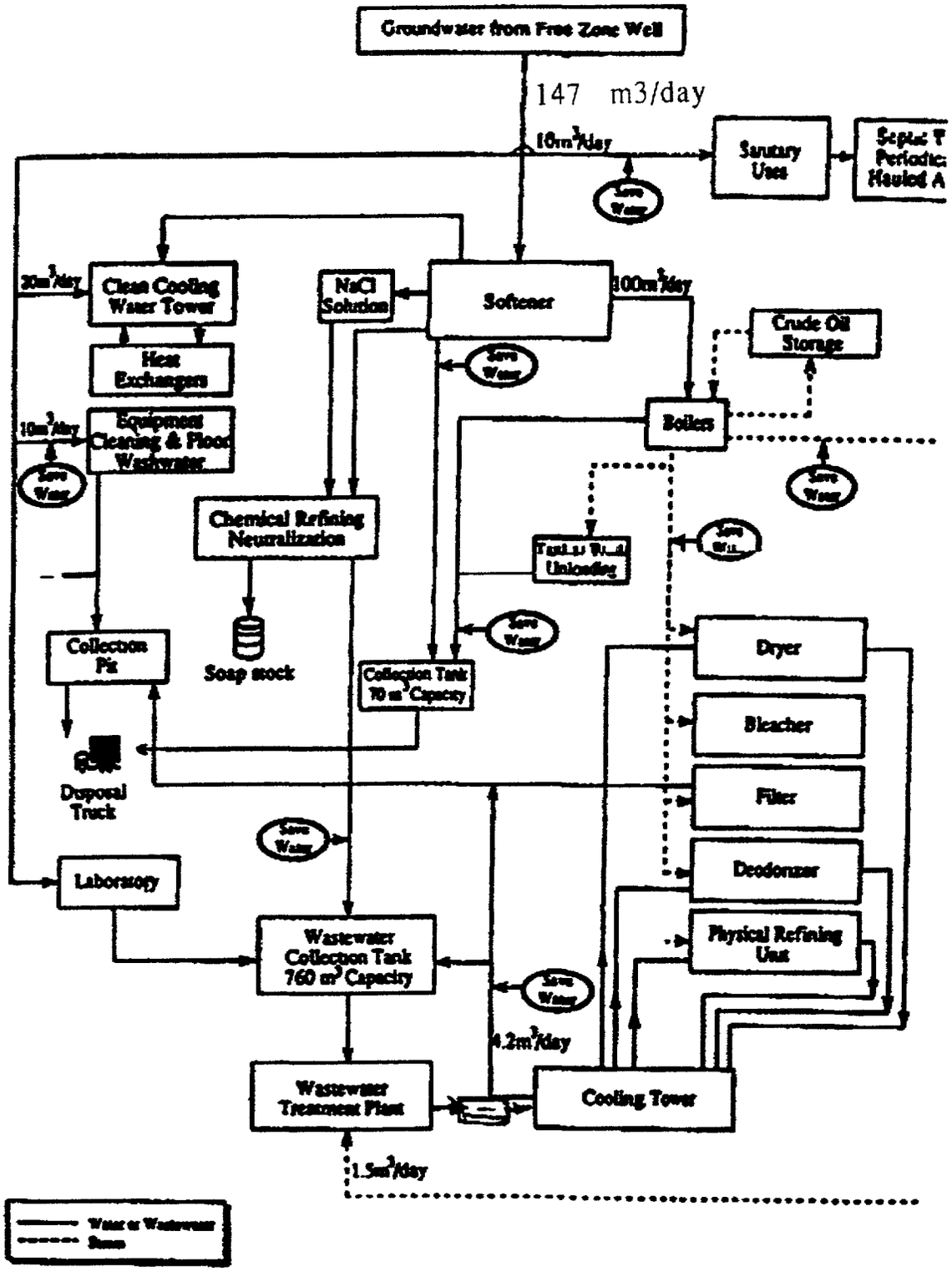

Figure 1

WATER AND WASTEWATER FLOW DIAGRAM
UNIVERSAL MODERN INDUSTRIES COMPANY, LTD
Zarqa, Jordan

HARZA Consulting Engineers and Scientists

BEST AVAILABLE COPY

Key

1	Gate
2	Storage tank for corn oil capc 2000 m^3
3	Wastewater collection tauk capc 760 m^3
4	Wastewater treatment plant.
5	Adminstration and offices
6	Final product storage
7	Maintenance workshop
8	Filling
9	Packagng tanks
10	Storage tanks for refined oil
11	Storage tanks for feeding the refinery
12.	Chemical refining,
13	Physical refining
14	Hot pit & Clean cooling tower
15	Storage tank for excess barometric condensate from cooling tower
16	Crude oil unloading point and pump room
17	Storage tank for palm oil capc 750 m^3
18	Storage tank for soya oil capc 750 m^3
19	Storage tank for palm oil capc 750 m^3
20	Storage tank for palm oil capc 1400 m^3
21	Laboratory
22	Cooling tower for vacuum system
23	Boiler haus and water softners
24	Collection pit for boiler blowdown an regeneration backwash
25	Storage tank for palm oil capc 2000 m^3
26	Fuel storage tank
27	Electricity generators
28 29	3 water wells
30	Freshwater storage tank capc 450 m^3
31	Store haus for chemicals
32 33	Store hauses for emty oil containers for filling
34	Outside collection pit for run off and floor and equipment cleaning water
X	Spills

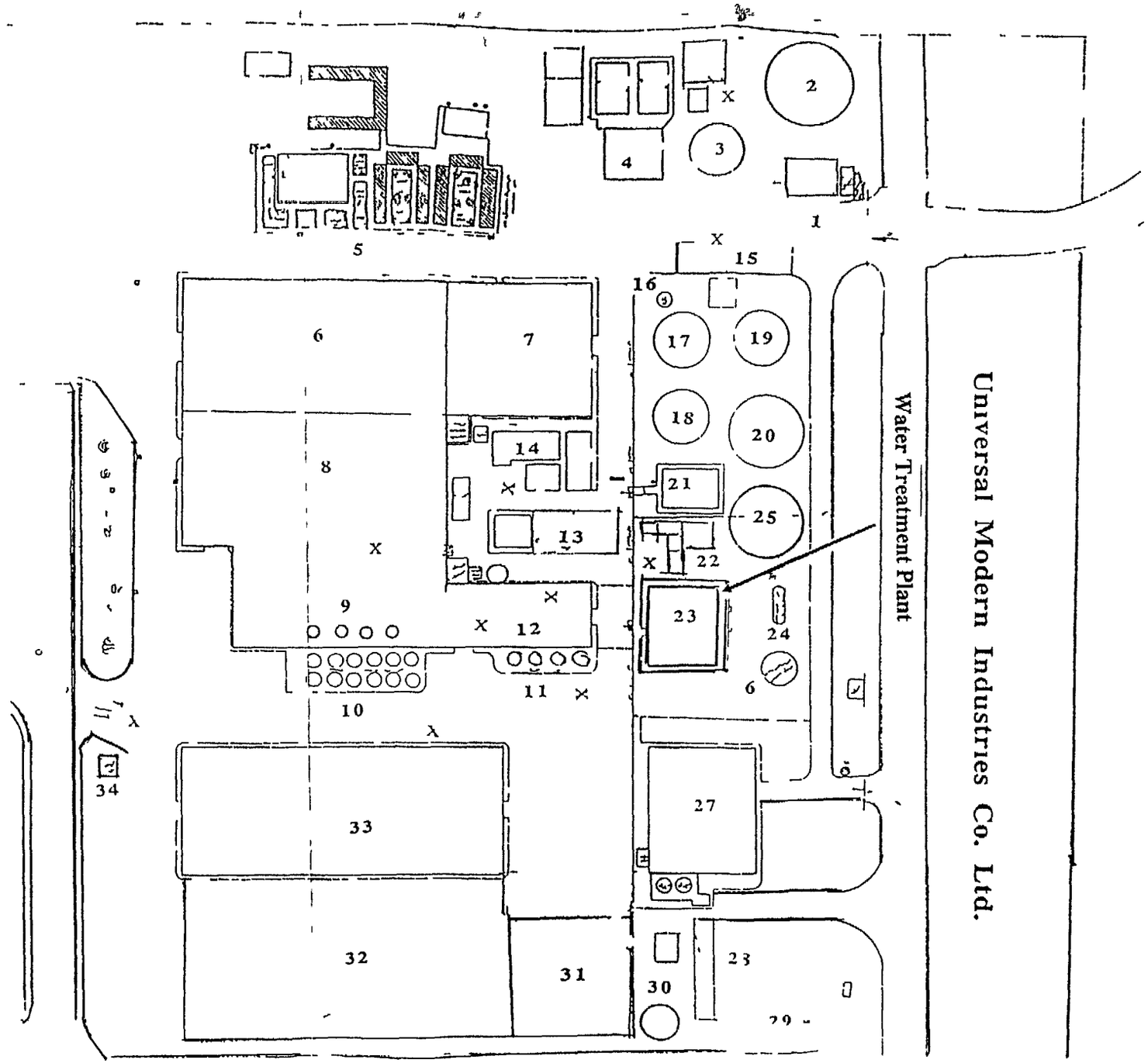

Figure 2 Facility Location Plan

مكتب المساحة الحديث
MODERN SURVEYING OFFICE

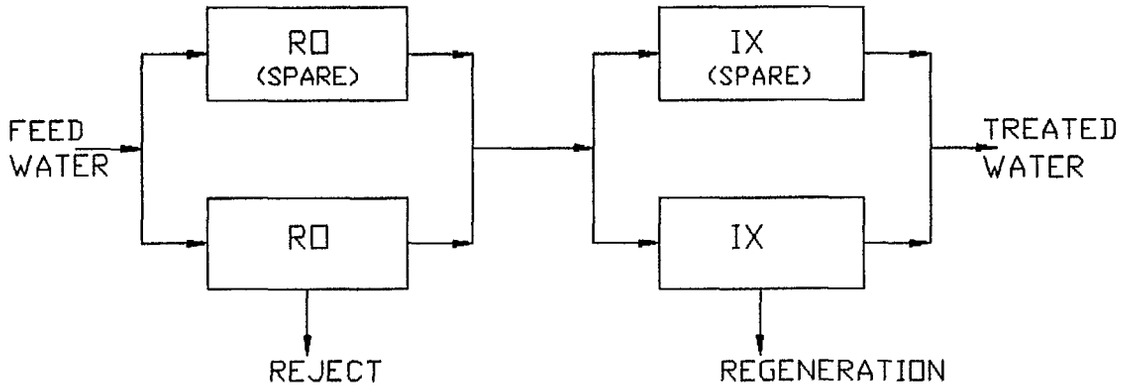

REVERSE OSMOSIS (RO) & ION EXCHANGE (IX)

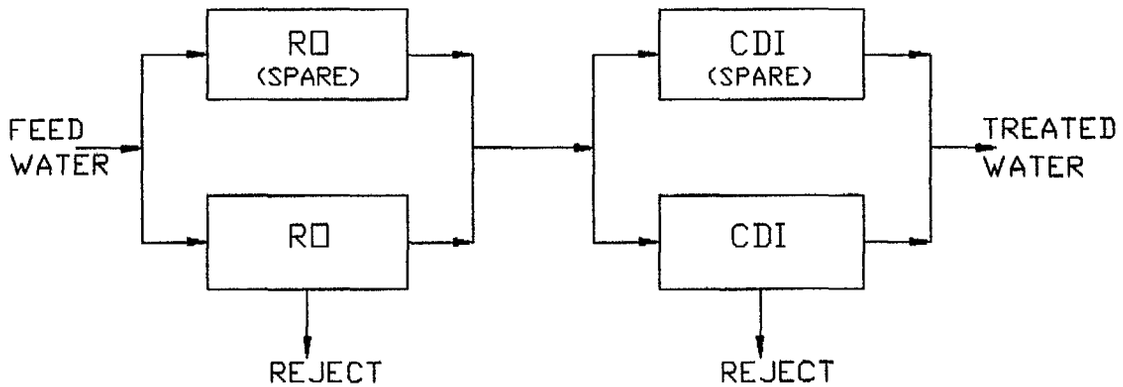

REVERSE OSMOSIS (RO) & CONTINUOUS DIONIZATION (CDI)

WATER
TREATMENT
PLANT

VEG OIL
FIGURE 3

APPENDIX A

Screening of Recommnedations for Universal Modern Industries Co (UMIC), Ltd

Screening of Recommendations

The recommendations provided in the Audit Report for the Universal Modern Industries Co (UMIC), Ltd (USAID Report No 3114-95-2b-29, April, 1995) were screened to determine the most promising measure for further investigation in a detailed feasibility study The recommendations of the audit report and the screening rationale applied to each is provided below The Audit Report groups recommendations in five categories

1 PP/WM Policy, Monitoring, and Training
2 Operational Modifications
3 Process Modifications
4 Good Housekeeping
5 Control of Other Waste Generating Activities

Each category is discussed below

1 PP/WM Policy, Monitoring, and Training

This measure is essentially a management issue and should be pursued by UMIC

2 Operational Modifications

2 1 Cooling Tower Optimization

Assess design or operational modifications for the current cooling tower or explore new cooling tower designs to minimize the evaporative losses and increase the concentration cycle

Optimization of the cooling system is technically feasible, however, total elimination of water based cooling for air systems is not feasible to due to the high ambient temperatures in Jordan The treatment of the makeup water by reverse osmosis unit is a technically feasible method to increase cooling water recycling and increase the concentration cycles However, given the high cost of RO systems and the relatively low cost of water (JD 0 1/m^3) , this measure is not economically feasible

2 2 Boiler Blowdown Reuse

Reuse boiler blowdown as floor washing and spill cleanup water

This measure is technically feasible, however, the Audit Report indicates that floor washing requirements 5 m^3/day, which could be saved by implementing this measure However Good Housekeeping measures discussed in Recommendations 2 4 and 4 will further reduce floor washing and spill cleanup requirements by 1 to 2 m^3/day

Cleanup water currently is discharged to a collection pit for off-site truck disposal Therefore, reuse of high TDS boiler blowdown for cleaning will not contribute TDS to the wastewater treatment plant or to irrigation as long as proper off-site disposal continues to be provided

To reuse boiler blowdown, the following elements must be provided

- Piping to convey the boiler blowdown to a sump,
- Ground level sump to receive boiler blowdown,
- Pumps to convey blowdown water from sump to an elevated storage tank,
- Elevated storage tank to store blowdown water, and
- Parallel piping to convey blowdown water from storage tank to areas where floor cleaning/spill cleanup is required This piping should be clearly differentiated from the potable water piping to avoid the use of boiler blowdown for the wrong purpose

These elements will cost JD 3,000 to JD 5,000, based on the flow requirements It is recommended that the Good Housekeeping measures discussed in item 2 4 and item 4 be implemented first, and that the blowdown reuse system be designed based on the resulting cleanup water requirements If the actual floor cleaning requirements are greatly reduced, and if additionally the areas that require cleaning are distant from each other, this measure may not be cost effective See Recommendation 2 4 for an alternative configuration for boiler blowdown reuse, which provides high pressure water supply for floor washing

The benefit of this measure would be a reduction of 3 to 5 m^3/day of fresh water consumption

2 3 Steam Leak Prevention and Control

Implement a more rigorous preventative maintenance program to prevent leaks and a rapid response repair program to fix leaks as soon a they occur

This measure is essentially a management issue and should be pursued by UMIC

2 4 Good Housekeeping

Develop and implement floor cleaning and spill cleaning procedures that focus on water conservation Such procedures should address

- *Cleaning first with dry methods,*
- *Collecting liquid spills with vacuum devices, and*
- *Replacing all low pressure hoses with high pressure, low volume hoses*

These measures are technically feasible and should be pursued in future UMIC plans Dry methods of cleaning, such as shovelling, should be used prior to cleaning with water

In order to supply high pressure water for the high pressure hoses, it is necessary to provide the following

- Pumps,
- Hydropneumatic tank,
- Parallel high pressure piping system to areas of use, and
- High pressure nozzles

An alternative measure is to combine this high pressure system with the reuse of boiler blowdown, as discussed in Recommendation 2 2 In this case, the elevated storage tank proposed in Recommendation 2 2 can be replaced by a hydropneumatic tank and supply boiler blowdown at high pressure This measure would require the following

- Piping to convey the boiler blowdown to a sump,
- Ground level sump to receive boiler blowdown,
- Pumps to convey blowdown water from sump to hydropneumatic tank,
- Elevated storage tank to store blowdown water,
- Parallel piping to convey blowdown water from storage tank to areas where floor cleaning/spill cleanup is required, and
- High pressure nozzles

The cost for this measure may range from JD 10,000 to JD 15,000, based on actual flow requirements It is recommended that PP/WM measures be implemented first, and based the actual amount of cleanup water required and the spatial separation of areas which still require cleaning, this measure be reassessed at a later date

The benefit from this measure is a reduction in fresh water consumption of 3 to 5 m^3/day

2 5 Domestic Waste Treatment

Reduce domestic water use by employee awareness and installation of water conservation equipment

This measure is essentially a management issue and should be pursued by UMIC The plant environmental team should make one member responsible for employee awareness Water conservation equipment should be purchased, employees should be trained for their proper use, and a maintenance program established to ensure conservation equipment remains functional

The benefit from this measure is a reduction in fresh water consumption of up to $2m^3$/day

2 6 Barometric Condenser and Steam Vacuum Optimization

Evaluate the current process operational procedures to optimize reductions in steam and cooling water More process control instrumentation, more accurate instrumentation, of faster feedback could enable greater process control that would minimize water losses or decrease water usage

Optimizing the condenser and steam vacuum systems are desirable measures In general, optimization of processes are typically ongoing tasks that involve numerous on-site trials to determine the minimum required inputs that are compatible with product standards

It is noted that UMIC currently has plans to implement several process modifications, including the replacement of the Barometric Condenser system with an indirect surface condenser system with vacuum boosters This measure will avoid contamination of cooling water with oil and will thereby save water Additionally, washing of centrifuges 1 and 2 will be done with citric acid and water, alllowing for the elimination of Centrifuge No 3 and the potential savings of approximately 8 m^3/day of water

3 Process Modifications

3 1 Centrifuge Optimization

The centrifuge could be optimized to avoid build up of soapstock within the centrifuge to eliminate cleaning of the centrifuges every 24 hours Some option are

- *Add gravity separation tank prior to the centrifuges to remove the larger particles that clog the centrifuge lines, and*
- *Operate a series of centrifuges with the first centrifuge designed to remove the larger particles and the subsequent centrifuges improving the separation efficiency*

As mentioned above, UMIC has recently decided to modify the centrifuge operation by washing centrifuges 1 and 2 with citric acid and water instead of water alone, and eliminating Centrifuge No 3 Because of these measures, the recommendations need to

45

be reevaluated by UMIC staff based upon implementation of new washing procedures

3 2 Wastewater Reuse

Investigate reuse of the following wastewaters

Neutralization washwater - Some options for reducing the generation of wastewater and reuse of washwater from the second and third centrifuges in the neutralization operation are

- *Treat the second centrifuge washwater discharge to recover the soapstock and reuse this washwater for the third centrifuge washwater,*
- *Treat, if necessary, and reuse the wastewater from the third centrifuge as washwater for the second centrifuge,*
- *Process the oil/caustic soda mixture with water in a countercurrent centrifugal contactor Then treat the water in a decanter followed by a cation-exchange resin column and reuse in the centrifugal contactor,*
- *Segregate and treat the wastewater by gravity separation followed by ion-exchange columns, then reuse the treated water as washwater, and*
- *Treat for recovery of the soapstock and reuse the treated washwater for cleaning equipment, floors or spills*

Given the modifications to centrifuges No s 1 and 2 and the elimination of centrifuge No 3, items 1, 2 above are no longer viable and item 3 needs to be reevaluated The viability of item 4 needs to be further studied, since the wastewater subject to gravity separation may contain some oil and soapstock and require ultrafiltration prior to ion exchange The viability of item 5 needs to be reevaluated in light of using citric acid in centrifuge 1 to recover soapstock Acidic water will need further treatment prior to using for equipment cleaning Pilot testing is recommended to determine actual feasibility of measures

3 3 Softener Regeneration

Instead of sodium chloride, use a regeneration chemical that is less harmful to the environment, such as acetic acid and ammonium hydroxide This chemical substitution would reduce the high concentrations of sodium and chloride salts in the wastewater

This measure is addressed in the detailed feasibility study

3 4 Softener System Upgrade

Continue with plans to install a larger capacity softener unit A unit that is optimally sized for the facility's operations will reduce the frequency of regeneration Use a newer state-of-the-art ion-exchange resin system that is regenerated with less solution and, therefore, generates a smaller volume, more concentrated wastewater

This item is chosen as the primary focus for the detailed feasibility study This measure is considered important for PP/WM and water conservation, and additionally may be applicable to many industries in Jordan

3 5 Live Steam Heat Elimination

Eliminate use of live steam for heating Use a closed loop heating coil in the tanker trucks and acidification tanks instead of live steam

This measure is technically feasible It is recommended that this measure be implemented after building containment dikes in loading and unloading areas to avoid increased spillage on the ground while removing the heating coil from one truck and introducing it into the next Additional piping and pumps are required to return the condensed steam to the boiler This measure will require additional time to heat the oil in the tanker trucks as well as additional workers to insert and extract the heating coils

The benefit from implementing this measure is a savings of up to 8 m^3/day of fresh water consumption

3 6 Wastewater Treatment System Optimization

Investigate design modifications, including replacement of existing equipment, and additional treatment that will enable recycle or reuse of treated wastewater

The existing wastewater treatment plant will be abandoned since it apparently was improperly designed and was never functional The UMIC has plans to build a new system, which will be similar to the exisitng with the addition that soapstock that was previously collected in drums will be treated together with the washwater in the acidulation drums Also, a new process scrubber will be provided for odor control

3 7 Water Cooling System Elimination

Investigate the use of a non-water cooling system for the heat exchangers Two potential non-water cooling methods are

- *Installing a non-water based closed-loop cooling system or an air cooling system, and*

- *Pumping the heated oil through a heat exchanger located in the crude oil storage tanks, this will eliminate the water cooled heat exchanger needed to cool the heated oil and the steam heating coil needed to heat the crude oil*

An air cooling system alone is not technically feasible, due to the high ambient temperatures in the Zarqa Basin area in Jordan A combined air/wet system is technically feasible, but is very expensive to implement for a facility with an existing wet system The same consideration is valid for non-water based closed loop systems Currently, 6 crude oil tanks are maintained at approximately 80 °C by circulating low pressure steam through a closed-loop heat exchanger within each tank Three tanks have a capacity of 750 m^3, one has a capacity of 1,400 m^3, and two have a capacity of 2,000 m^3 The hot oil is at 170 °C The existing clean cooling system will need to be maintained, since the cooled oil will be at 80 °C The water requirements, however, will be reduced It is recommended that the existing steam loops be retained as a backup Due to lower oil temperature and greater specific heat, the number of heat exchange coils for the crude oil tanks will be significantly greater than for the existing steam system The preliminary cost estimate for implementing this measure is JD 80,000, including the heating exchangers, piping modifications, pumping, and installation

The benefit from this measure is the saving of up to 10 m^3/day of fresh water consumption

3 8 Crude Oil Quality Control

Investigate the cost/benefit of obtaining a higher quality crude oil to reduce water consumption and wastewater generated Work with suppliers, shippers, and transport companies to establish standard shipping and transport practices that would reduce the time in-shipment and storage, the number of transfers that occur, and the oxidation that occurs during shipment and storage

This measure is essentially a management issue and should be pursued by UMIC

3 9 Process Equipment Design Modifications

Explore design modification to the process units, the barometric condensers, and the steam vacuum system that would decrease the overall water quantity (cooling water and steam)

The above measures are technically feasible and are being pursued by UMIC, as discussed previously

4 Good Housekeeping

- Spill Control and Clean-up Procedures - Improve spill control and spill clean-up procedures Some PP/WM measures are

  - Use a vacuum pump instead of shovels

  - Install a pump in the trays underneath the filling machines to capture oil and return to filling machines or packaging tanks This immediate capture of the oil will prevent contamination of the oil so that it will not need to be refined

  - Conduct quality control checks on containers to detect leaks before using containers, this will prevent leaks from defective containers Purchase from suppliers that will provide better containers

- Construct covered concrete loading and unloading areas and storage areas for raw materials, products and wastes These areas should also have containment dikes

  The different materials should be kept segregated from others These measures will isolate spills, prevent soil contamination, and eliminate storm water runoff Eliminate any drains in containment structures and keep these structures repaired and maintained

The Audit Report identified oil spills occuring where the crude oil is unloaded from tankers to storage tanks No cover or containment currently exists in this area, and it should be provided The following is proposed

> Install a 4 m x 10 m sloped concrete pad with a central drainage channel with steel grating and collection sump Provide 0 30 m concrete sides to contain spillage Provide oil-water separator Install a 4 m x 10 m corrugated steel roof at a height of 5 m (to allow room for the existing live steam lines) The effluent is discharged to the wastewater treatment plant

The installed cost is estimated at JD 5,000

The benefit from this measure is reduced contamination of soil in the loading area

- Seal any holes and drains in the floors to prevent the discharge of spills

and leaks to clean areas

- Use treated wastewater to clean floors and equipment and to clean up leaks and spills throughout the UMIC facility If the soapstock is contributing to the oily floor and surfaces, substitute detergent

- Any open containers, such as buckets used to collect process control samples for the laboratory, should be fitted with tight fitting lids and kept sealed when not used

The above measures are technically feasible and should be pursued by UMIC in future plans

5 Control of Other Waste Generating Activities

5 1 Bleaching Clay Optimization

Investigate optimizing the addition of bleaching clay to reduce excess This would reduce amount purchased, reduce losses of oil in the spent clay, lengthen the filter cycles, and reduce the quantity of spent clay generated

As mentioned previously, process optimization is an ongoing task that will require experienced UMIC staff to determine process viability without affecting final product quality standards These optimization tasks should be pursued by UMIC

5 2 Bleaching Earth Filter Cake Recycling

Investigate alternative uses for the filter cake These are not PP/WM measures, but UMIC uncontrolled disposal of this material as a waste could be improved by considering this material as a beneficial resource or raw material for another industry For example, the clay content of the cake may make the cake a suitable raw material for soil conditioner to improve sandy soils The cake could also be used as raw material in the production of poultry feed or other domesticated animal feed

This measure is not strictly a PP/WM measure but is still desireable and should be pursued by UMIC

5 3 Sediment Control

Investigate possible ways to minimize sediment in the final product packaging tanks Less sediment in these tanks would result in less frequent cleaning, less waste to be removed, and higher quality product One method to reduce sediment generation would be installing a circulation pump or an ultrafiltration unit before the tanks

We do not agree with this measure If the product contains sediment, it will need to be removed by some filtration device If such a device is used, it will create a source of wastewater and additionally will require water to be cleaned periodically The reduction in water use by implementing filtration, if any, is not expected to be significant and will not justify the cost

5 4 Domestic Waste Treatment

Construct an engineered septic tank with a suitable leachfield to treat the domestic wastes generated by the facility

This is not strictly a PP/WM measure but is technically feasible and should be pursued by UMIC in future plans Minimal effort and no engineering analyis is required

APPENDIX B

RECOFLO® Water D

ntial in chemical processing power ration electronics and many other ess industries deionized water can xpensive to produce

tionally large columns containing beds of ion exchange resin have used in conventional deionization ems By using large quantities of long run times between nerations are possible However cumbersome systems frequently from a number of disadvantages

installation start-up and test-out ods

ge floor space and headroom uirements

fficient co-current regeneration

efficient RECOFLO process oves on conventional ion exchange pment through the use of innovative gn concepts The equipment that its is smaller than conventional pment. But the difference goes far nd size RECOFLO equipment uces better quality water at a much cost

The technology

Eco Tec Water Deionization Systems use RECOFLO ion exchange technology This advancement in ion exchange technology incorporates a number of innovative features

1 Short resin columns

Short resin columns utilize fine mesh resins Fine resins provide large amounts of readily accessible surface exchange sites Ion exchange takes place very quickly at these sites Surface sites are the easiest to load and the easiest to regenerate

2 Fully packed resin beds

Fully packed resin beds improve flow distribution in the resin column while minimizing resin breakdown When flow distribution is improved the loading and regeneration process occurs more efficiently better water results and less chemicals are required

3 Counter-current regeneration

Counter current regeneration is used to further improve efficiency Though widely recognized for its benefits counter current regeneration is not used on most conventional systems

These design features combine to yield better quality water from smaller more compact ion exchange equipment In addition RECOFLO® systems cost less to operate than conventional systems

◀ Proven RECOFLO® ion exchange systems have been used in hundreds of plants around the world since 1972

Conventional exch e

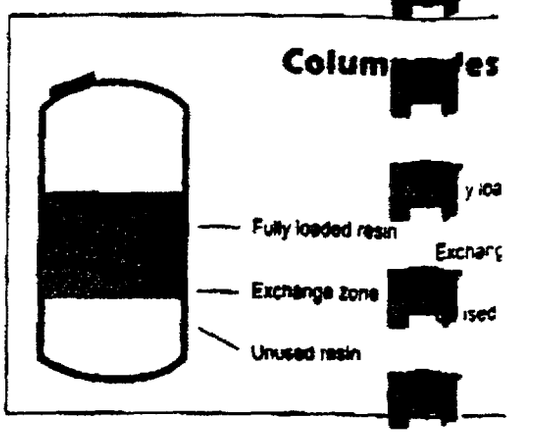

In a conventional column most of the resin is inactive Ion exchange takes place within a narrow band called the exchange zone As the resin becomes exhausted the band moves down the column Once it nears the bottom of the resin bed, regeneration is initiated

Eco-tech exch an REC and resul

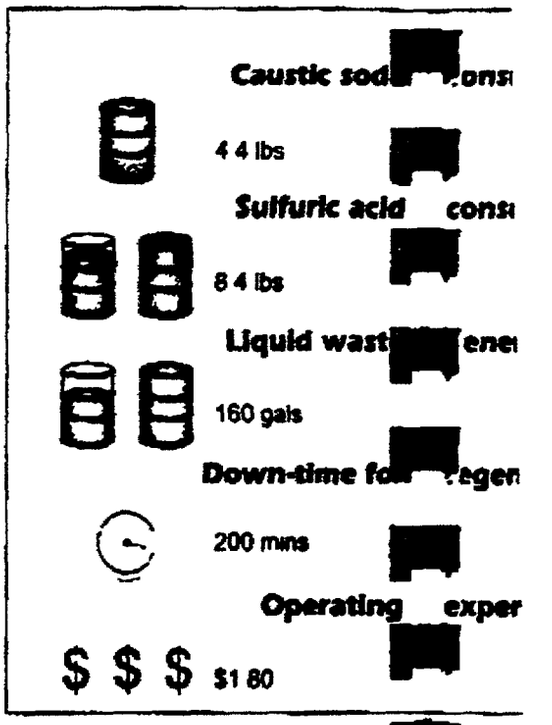

Notes

1 Chemical usage is expressed as pounds of 100% by weight chemical consumed per 1000 gallons of water produced and assumes cocurrent regeneration of the conventional columns, a feed water quality of 250 ppm TDS and an average water quality of one megohm-cm.

2 Wa gall gall

3 Ope caus and

BEST AVAILABLE COPY

beionization Systems

e versus RECOFLO®

'esign

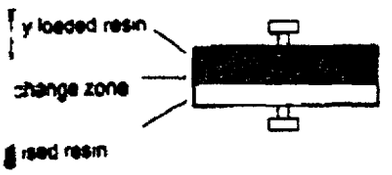

Eco-Tec systems employ RECOFLO technology to reduce the height of the exchange zone Rather than maintain an excess inventory of resin the RECOFLO® system moves the zone up and down rapidly in a short column The result is better water at lower cost

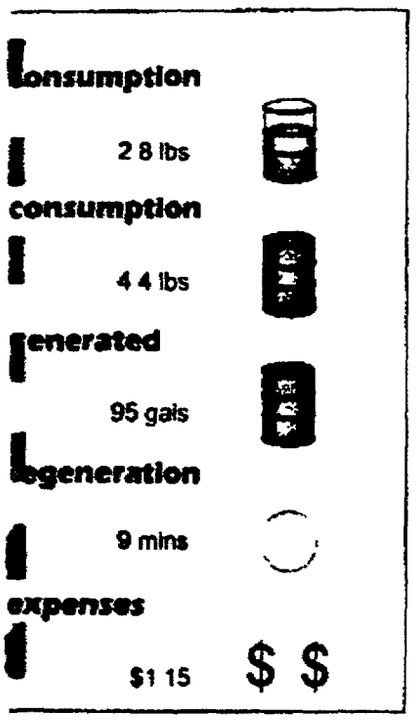

2 Waste quantities are expressed as gallons of water consumed per 1000 gallons of deionized water produced.

3 Operating costs based on $0.2/lb for caustic soda $0 05/lb for sulfuric acid and $0 003 per gallon for water

The equipment

A range of standard models is available with varying capacities (see chart on the back cover) to treat waters of different compositions

A typical Eco-Tec Water Deionization unit consists of a cation exchanger anion exchanger regeneration system and an automatic control panel all pre-assembled and pre-wired on a structural steel frame

The total water treatment solution provided by Eco-Tec includes auxiliary equipment such as multi-media and carbon filters tanks pumps and controls These are incorporated into the design to provide an integrated system

All equipment is thoroughly tested prior to shipment.

All RECOFLO water treatment systems include features such as

1 *Automatic PLC control with optional graphics display and data acquisition*
2 *PVC stainless steel or FRP wrapped piping to meet your specifications*
3 *A unique distribution design that ensures even flow through the resin*
4 *A regeneration system mounted right on the resin vessel frame*
5 *An on-board recirculation pump to reduce rinsing wastes*
6 *Metal surfaces that are sand-blasted and epoxy coated for an attractive yet durable finish*
7 *An overall height of 80 inches (205cm) that permits installation in areas with limited headroom*
8 *Complete assembly with resin prior to testing and shipment.*
9 *A rugged design that has been proven in hundreds of plants for over twenty years*

The benefits

1 Better quality water

• A standard cation / anion single pass Eco Tec unit can produce deionized water with a conductivity of less than one µmho/cm (>one megohm cm)

• When used to polish the effluent from another Eco-Tec system conventional deionizer or reverse osmosis unit, the water from a standard Eco-Tec unit will have a conductivity of less then 0 1 µmho/cm (>10 megohm-cm)

• When silica removal is critical Eco-Tec systems can produce water with silica levels of 5 ppb Removal is enhanced through the use of counter current regeneration and fine mesh resins

2 Lower Operating Costs

• The Eco-Tec Water Deionization units use less water and chemicals than conventional units during regeneration In many cases costs are cut by 30%

• Eco-Tec units are also designed to produce a chemically neutral waste By balancing the acid and the alkali requirements of the system virtually no additional treatment is required

• Maintenance requirements with the small Eco-Tec resin columns are less costly Most columns can be completely disassembled and rebuilt in less than two hours

3 Smaller equipment

• An Eco-Tec Deionization unit is less than eight feet tall In areas with limited headroom, Eco-Tec equipment offers more flexibility than conventional systems

• With a typical regeneration time of five minutes, duplex equipment is not required A small storage tank can be used to provide an uninterrupted source of deionized water Space requirements for an Eco-Tec system are often much less than for a conventional system.

BEST AVAILABLE COPY

RECOFLO® Water Deionization Systems

The RECOFLO® Ion Exchange Process

All Eco-Tec Water Deionization systems use the RECOFLO® ion exchange process a major advancement in ion exchange technology By incorporating a number of innovative design features, such as

- fine mesh resins
- totally packed resin vessels
- plug flow distribution
- countercurrent regeneration

RECOFLO® is able to significantly improve the performance of ion exchange resins RECOFLO technology is patented in Canada the U S A and other countries worldwide

In-house manufacturing

From the fabrication of structural steel frames and corrosion resistant piping systems to the assembly and wiring of electrical control panels, Eco Tec ensures that all equipment is manufactured to the highest level of industrial quality

All Eco Tec Water Deionization systems are tested with resin installed and full chemical regeneration.

Three year warranty

Unmatched by other suppliers, Eco-Tec offers a superior warranty on all equipment supplied for full three years from date of startup In addition resin warranties are also available

Installation and start-up

Eco-Tec offers the choice of either turnkey installation or engineering assistance for your installers In either case, Eco Tec engineers supervise start-up and provide training to ensure that each system is integrated fully into your operation

Technical service

Eco-Tec customer service group is on call 24 hours per day to handle any questions during start-up or operation of your system Technical service personnel can normally be on-site within 24 hours of your call

Eco-Tec also maintains a fully stocked spare parts inventory Your parts order can usually be shipped the same day

Equipment specifications

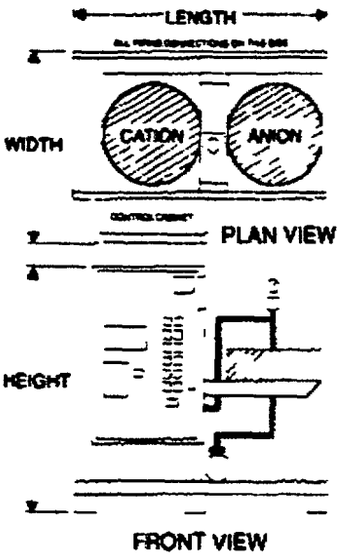

Model No	Net Capacity (GPM avg)	Service Flow Req'd (GPM)	Dimensions (L x W x H)	Shipping Weight (Lbs)
WD12	10	16	60" x 53" x 80"	2300
WD16	18	28	62" x 58" x 80"	2400
WD20	28	44	70" x 62" x 80"	2700
WD24	41	63	78" x 66" x 80"	3700
WD30	63	98	93" x 75" x 80"	5000
WD36	91	141	108" x 81" x 80"	6600
WD42	125	192	120" x 85" x 80"	13000
WD48	162	251	135" x 93" x 80"	17000
WD54	205	318	150" x 100" x 80"	20000
WD60	255	392	165" x 104" x 80"	25000
WD66	305	475	174" x 110" x 80"	30000
WD72	365	566	186" x 120" x 80"	35000

Notes

1 Operating conditions are based on a feedwater TDS of 250 ppm with a setpoint of 5 µmhos/cm

2 Flows are based on nominal ratings however exact operating conditions will be dictated by actual water analysis and quality requirements

3 Dimensions and weights are approximate and subject to change without notice

eco-tec

ECO-TEC INC
925 Brock Road South
Pickering (Toronto)
Ontario Canada L1W 2X9
Tel (905) 831 3400
FAX (905) 831 3409

ECO-TEC (EUROPE) LTD
Units 5C D & E
Chase Park Industrial Estate
Ring Road, Chase Terrace Walsall
WS7 8JC England
Tel (44) (0543) 683086
FAX (44) (0543) 674117

Represented by:

All statements information and recommendations contained herein are to our knowledge true and accurate However no guarantee or warranty is given, expressed or implied Nor shall any statement, information or recommendation constitute a representation unless set forth in an agreement signed by Eco-Tec Inc

55

TECDATA

eco-tec

Dozen Reasons
PB-9419

Recoflo®

WATER TREATMENT SYSTEMS

A Dozen Reasons why Recoflo is a Better Value for Water Treatment

Well Proven Technology

The Recoflo exchange process has successfully worked in over 800 industrial process and water treatment applications around the world. With over 24 years of supplying systems for the water treatment and harsh chemical waste and metal finishing applications, Eco-Tec has vast and impressive installation and service record.

High Product Water Quality

The water quality, produced by a Recoflo deionizer is typically 1 to 5 megohm-cm on a single pass. A double pass through the system will produce 10+ megohm-cm quality, matching the performance of a mixed-bed unit (without all its operational difficulties and chemical inefficiencies)

Low Installation Cost

All Recoflo deionizers are shipped skid-mounted complete with the resins loaded, all valves and the manifold installed and all instruments and controls pre-wired. This minimizes field installation time and helps eliminate errors. Typical installation costs for a 100 gpm Recoflo system are approximately 55% that of a conventional demineralizer system.

Minimum Floor Space

Recoflo systems typically require 40% to 50% less floor space and 50% to 70% less headroom than conventional units. This means lower real estate costs, more equipment location flexibility, and the ability to retrofit the equipment into smaller locations when upgrading existing facilities

Fast & Trouble-Free Start-up

All Recoflo deionizers are completely tested for performance to specifications prior to shipment for a minimum of 50 cycles. Every unit is shipped resin packed and fully regenerated ready for immediate operation at the job site

Low Chemical Exposure

Recoflo deionizers are designed for complete automatic operation with minimum operator attention. Introduction of acid and caustic to the deionizer is achieved using internally skid-mounted variable speed gear pumps supplied direct from remote bulk storage tanks. Only small amounts of chemicals are used for each regeneration

BEST AVAILABLE COPY

Low Operating Costs

a) Fully Automatic Operation Little or no operator attention is required on a routine basis. Chemicals are introduced automatically as required. Product water quality is monitored continuously by means of an in-line resistivity monitor The regeneration sequence is completely controlled by a programmable logic controller and all key functions are continuously monitored with alarm signals for any malfunctions

b) Low Chemical consumption By using counter-current regenerations, fine-mesh resin and over packed beds, the Recofio deionizer has proven to be the most efficient ion exchange system on the market today On an average, Recofio deionizers use 50% of the chemicals required by conventional demineralizers

c) Low Resin Replacement Cost Resin inventory for Recofio is 7% to 15% that of conventional systems due to the short-bed design Resin attrition, experienced in conventional systems, is virtually non-existent with Recofio Small amounts of resin also mean less down-time and costs in case of resin replacement.

d) Less Regenerant Waste Recofio deionizers are designed to produce low volumes of self-neutralizing wastes Generally, no further treatment is required for discharge while typically producing 40% less waste than conventional systems

e) Simplified Troubleshooting With complete regeneration sequences taking less than ten minutes, troubleshooting procedures, like double regenerations, are completed with a minimum amount of downtime and labor

Low Risk for Bacteria Growth

The standard Recofio design features a simple piping manifold with virtually no "dead legs" Diaphragm self-cleaning valves (butterfly-type for lines 3" in size or larger) also reduce the chance for bacteria growth. The short-cycle, reciprocating flow action of the Recofio design "sanitizes" the beds by the frequent introduction of regenerants

Resisting Organic Fouling

The chance of organics staying on the Recofio resin beads is low compared to conventional systems under the same inlet water conditions. The regeneration cycle of the Recofio design does not allow penetration of the resin bead as the bed is flushed frequently Organic removal procedures if required, like brine squeezes, are performed within a few hours

Three-Year Warranty

Eco-Tec has great pride and confidence in the products we manufacture Backed by years of service in environments much harsher than water treatment, we offer an unprecedented three-year equipment warranty against defective materials and workmanship on all the products we sell.

ECO-SERV Customer Service

In addition to the in-house testing, commissioning supervision, operator training, laboratory analytical service, and fully stocked spare parts inventory, Eco-Tec provides lifetime equipment performance monitoring and 24-hour telephone customer service In the event a customer needs any parts or one of our service representatives on-site, we can normally supply such service within twenty-four hours

Research & Development

Eco-Tec's commitment to continuous research and development is reflected in the establishment of a totally independent high technology subsidiary, Prosep Technologies In line with Eco-Tec's mission, Prosep's mandate is to introduce cost effective solutions to water purification problems using the latest technologies Recofio is a product of extensive research and is backed by a continuous development program

eco-tec

ECO-TEC Inc
25 Brock Road South
Pickering, Ontario
Canada L1W 2X9
Tel (905) 831 3400
Fax (905) 831 3409

ECO-TEC (EUROPE) Ltd.
Units 5C, D and E Chase Park Industrial Estate
Ring Road, Chase Terrace Walsall
England WS7 8JQ
Tel (44) (1543) 683086
Fax (44) (1543) 674117

Represented by:

All statements, information and recommendations contained herein are to our knowledge true and accurate However no guarantee or warranty is given, expressed or implied Nor shall any statement, information or recommendation constitute a representation unless set forth in an agreement signed by Eco-Tec.

BEST AVAILABLE COPY

RECOFLO® Water Deionization Systems

...Superior performance with advanced ion exchange technology

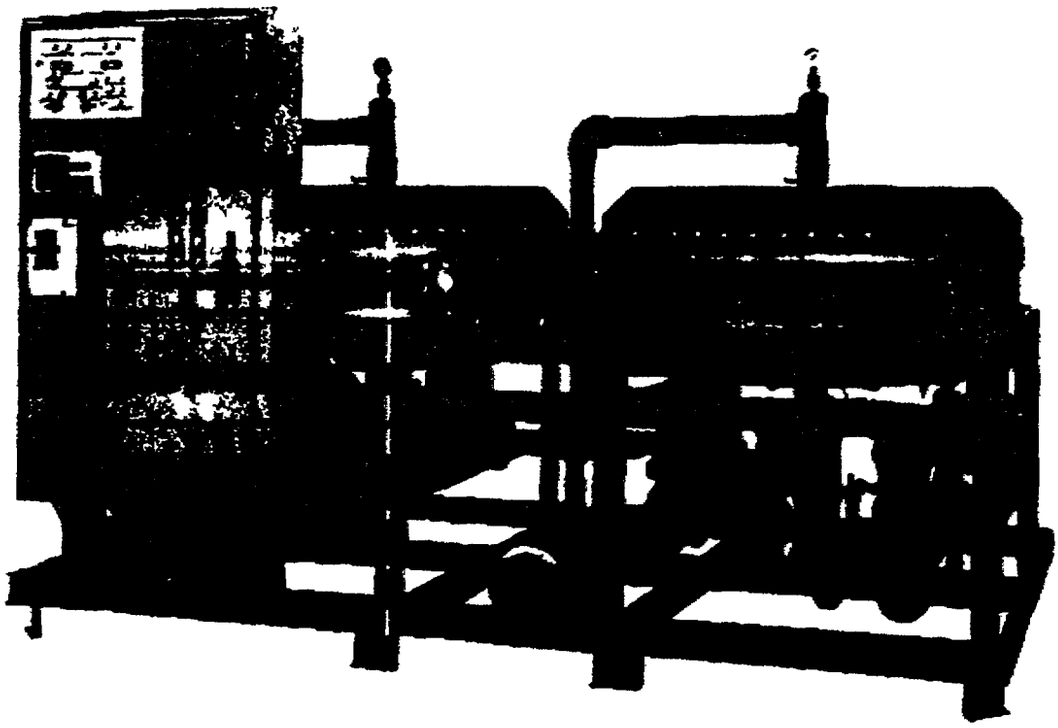

eco-tec

58

APPENDIX C

How Continuous Deionization Works

1) Feed water enters the system and flows inside resin/membrane compartments Part of the feed stream flows along the outside of the membrane surface to wash away unwanted ions

2) Resins capture dissolved ions

3) Electric current drives captured cations through cation membranes and captured anions through anion membranes

4) Cation-permeable membranes transport cations out of resin compartment but prevent anions from leaving waste stream

5) Anion-permeable membranes transport anions out of resin compartment but prevent cations from leaving waste stream

6) Waste stream flushes concentrated ions from system

7) Product water leaves system

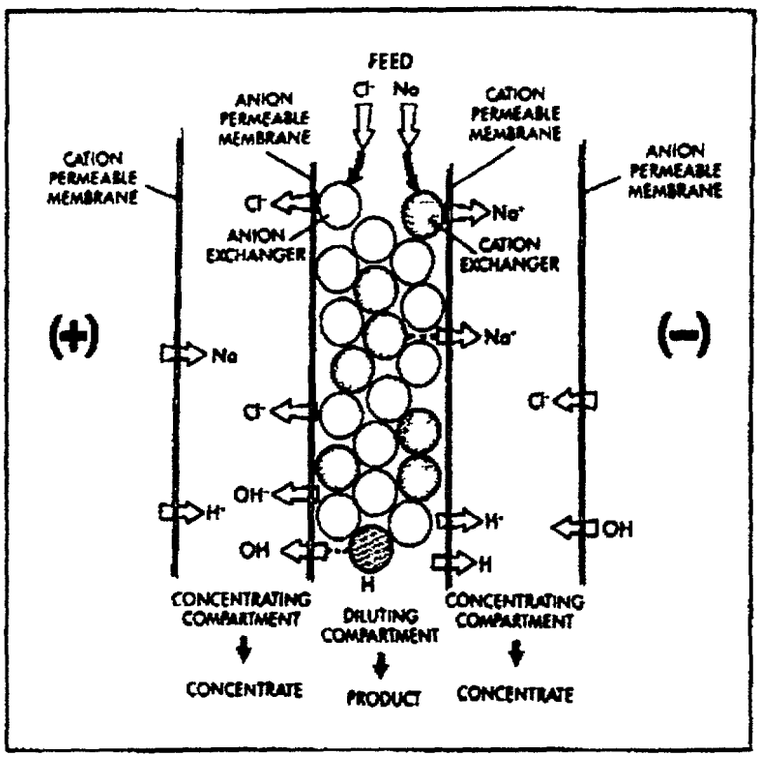

Typical industries where Ionpure CDI is being used include

- pharmaceutical
- electronics
- chemicals manufacturing
- electro-coating
- boiler make up
- food and beverage
- laboratories
- power generation
- optical glass manufacturing
- cosmetics

Percent Salt Reduction
The CDI process removes mineral salts on a predictable basis related to the feed concentration, feed flow rate and type of pretreatment The variable controller option will allow for automatic power adjustment to maintain a constant percent reduction

Feed Water Requirements
Starting tap water must meet EPA potable water requirements

Operating Pressure 20 - 60 psi

Temperature 10-35°C (50-95°F)

Free Chlorine

< 0 1 ppm at 80% recovery

< 0 05 ppm at 85% recovery

< 0 025 ppm at 90% recovery

Iron, Manganese, Sulfide <0 01 ppm

pH 4 10

Prefiltration Required. 5 µm nominal
1 µm nominal if SDI is >4

Dissolved Organics (TOC): < 0 5 ppm

Hardness < 1 0 ppm

Softeners are required for all tap feed applications

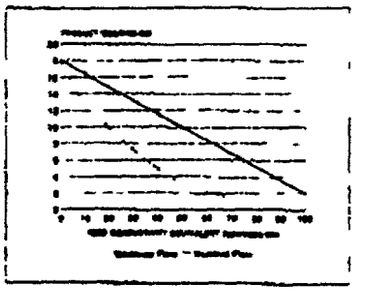

Single stage CDI performance with RO feed at nominal and maximum flow

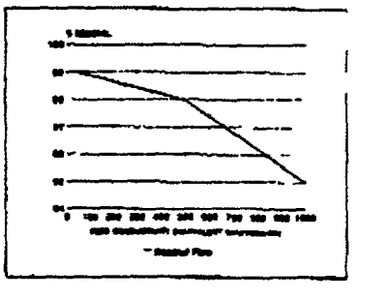

Single stage CDI performance with tap water feed at nominal flow

CDI MODULE	H030	H060	H120	H240
Nominal Flow Conditions				
Product flow rate gpm (lpm)	5 (19)	10 (38)	20 (76)	40 (151)
Product recovery	80 - 95%	80 - 95%	80 - 95%	80 - 95%
Pressure drop @ 25°C, psid	8	8	10	10
Other Flow Conditions				
Minimum product gpm (lpm)	2 (8)	4 (15)	8 (30)	20 (76)
Maximum product gpm (lpm)	8 (30)	16 (61)	32 (121)	64 (242)
Percent Salt Removal (at nominal flow)				
RO feed ≤ 50 µmho/cm	> 99	> 99	> 99	> 99
Tap feed ≤ 500 µmho/cm	98	98	98	98
Tap feed ≤ 1000 µmho/cm	95	95	95	95
AC Electrical Requirements (maximum)				
Less than 150 µmho/cm	7A / 1Ø	7A / 1Ø	14A / 3Ø	21A / 3Ø
Between 150 - 600 µmho/cm	7A / 1Ø	13A / 1Ø	21A / 3Ø	33A / 3Ø
Between 600 - 1000 µmho/cm	7A / 1Ø	14A / 1Ø	21A / 3Ø	45A / 3Ø
AC input voltage 220-250V 50/60 hz. Other AC options are available				
Dimensions, Module with Flow Control Assembly				
Height, inches (cm)	45 (114)	45 (114)	45 (114)	46 (117)
Width inches (cm)	33 (84)	33 (84)	39 (99)	32 (82)
Depth, inches (cm)	39 (86)	36 (91)	54 (137)	72 (183)
Operating Weight lbs (kg)	350 (159)	450 (201)	660 (300)	1200 (544)

System Specifications
CDI units can be configured in parallel to obtain the desired flow rates Systems are available in flow capacities of 5 500 gpm Varying the flow rate through the CDI unit will vary the resistivity of the product water Product recovery for all modules can be as high as 95% with RO feed

Pre-treatment
CDI technology was developed to operate with little or no downtime In order to accomplish this the feed water must be pretreated to optimize the operation and to prevent downtime due to scale formation and colloidal and particulate plugging Pretreatment is also needed to reduce high levels of free chlorine and organic foulants

Dissolved carbon dioxide is converted to bicarbonate salts and then removed by the CDI process Loading due to CO_2 must be considered when predicting water quality

In most cases the use of Reverse Osmosis prior to CDI will provide all pretreatment necessary for optimum operation of the CDI The type of pretreatment required is determined by comparing the water to be purified with the feed water requirements

U S Filter will design custom pre-treatment equipment to meet the feed water standards

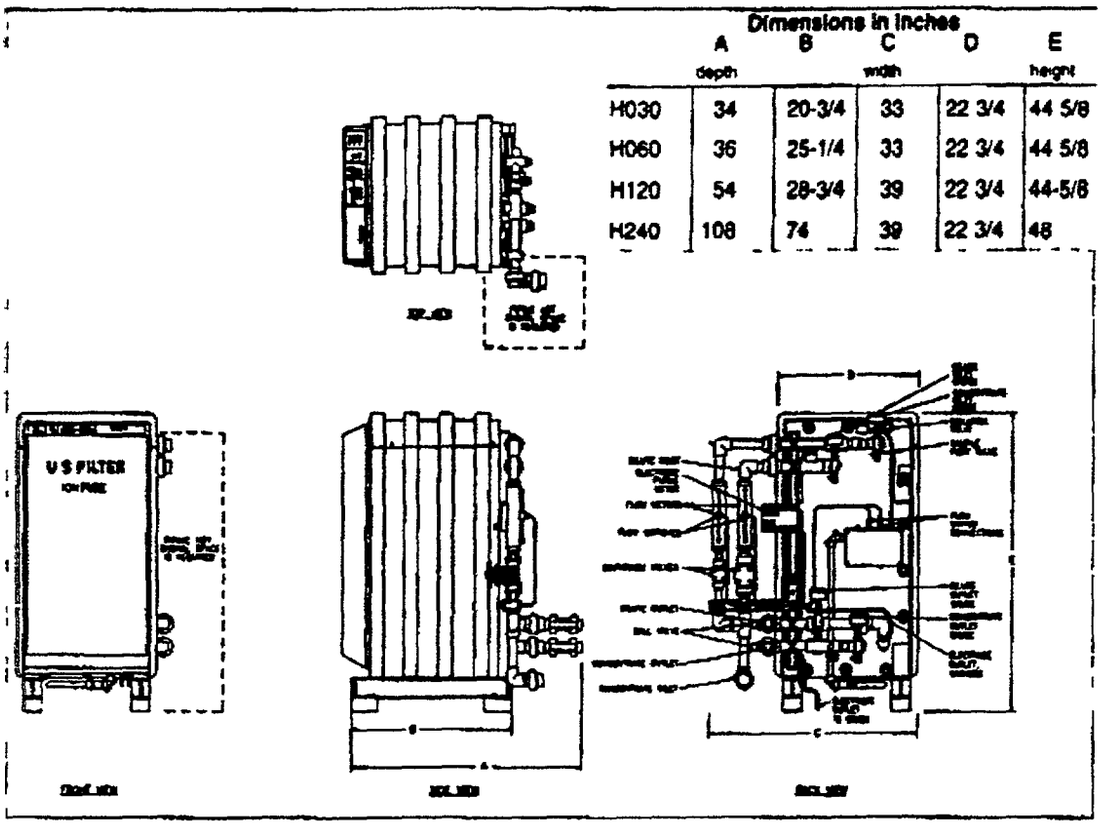

	Dimensions in inches				
	A	B	C	D	E
	depth		width		height
H030	34	20-3/4	33	22 3/4	44 5/8
H060	36	25-1/4	33	22 3/4	44 5/8
H120	54	28-3/4	39	22 3/4	44-5/8
H240	108	74	39	22 3/4	48

For Product and Services Information
United States Filter Corporation
10 Technology Drive
Lowell MA 01851
Phone 508-934 9349
Fax 508-441-6025

For Technical Support Call –
1-800-466-7873 extension 5000

Offices Outside U S – Call

Belgium	10 45 46 07
Costa Rica	506 238-2636
France	(1) 34.82 17 00
Germany	60 02 50 50
Hong Kong	852 5960000
Ireland	31-825-1461
Italy	02/45 100 179
Mexico	527 312 5576
Netherlands	1608 17711
Puerto Rico	809 747 9404
Spain	1 327-1740
Sweden	23-39150
U.K	992-501513

U.S.FILTER
UNITED STATES FILTER CORPORATION

Ionpure is a registered trademarks of United States Filter Corporation
Printed 12/94
H-Series CDI Literature # US034

In accordance with United States Filter Corporation policy of continual program of product development and improvement, we reserve the right to change the product specification within this literature at anytime without prior notice

Printed on recycled paper

High-purity Water for Power Generation

Ionpure Technologies Corporation is a worldwide company involved in the design, manufacture and service of high reliability standard and turn-key water purification systems for critical industrial applications. Ionpure's unique purification technologies are the result of 30 years of research, development, and technical innovation. This experience, along with a strong commitment to system integration and customer satisfaction, has helped establish Ionpure as the world leader in industrial water purification.

Ionpure markets an exclusive water purification process that is capable of producing ultra-high purity water that meets the specifications of the power industry, has high system recovery, greatly reduces operating costs, and eliminates exposure to hazardous chemicals. This process, known as RO/CDI is an ideal alternative to automatic deionizers and provides a chemical-free deionization process with the additional benefits of consistent water quality, lower operating costs and reduced manpower requirements.

The Need for Pure Water

Trouble-free operation of high pressure boiler and steam systems is dependent on maintaining stringent boiler feedwater, boiler water and steam chemistry specifications. An inadequate or poorly designed water treatment system can result in scaling and deposition on boiler tubes and turbine blades, causing loss of heat transfer, tube failure and reduced turbine efficiency.

For these reasons, it is important that your plant's water treatment system is designed to continually meet critical chemistry specifications, provide uninterrupted power generation and avoid costly downtime for repairs or cleaning.

RO/CDI — The Ionpure Solution

Ionpure's cost-effective RO/CDI water purification process offers a practical solution for producing ultra-high quality water without requiring hazardous chemicals for regeneration. By combining two proven technologies (Reverse Osmosis and Ionpure's patented Continuous Deionization (CDI)), the RO/CDI deionization process is able to achieve greater than 0.1 micromho/cm water quality, continuously, without chemicals and with extremely low operating costs.

In addition to achieving the conductivity specification, the RO/CDI process produces high purity water with less than 10 ppb of silica and less than 50 ppb of TOC keeping turbine blades and other mechanical parts clean for long term, uninterrupted operation.

What is Continuous Deionization?

CDI is a continuous process that uses ion exchange resins, ion exchange membranes, and a simple electrical current to purify water — continuously. This process produces consistent high water quality up to 0.055 micromho/cm, and significantly reduces silica content and TOC. And since CDI does not require chemical regeneration, there is no downtime or costly interruptions in service.

Complementary Technologies

RO (Bulk Deionization)

- Removes 90-96% of all TDS
- Removes 95-98% of feed silica
- Removes 99% of all organics greater than 200 molecular weight (TOC)
- Removes 99% of all particulate matter

CDI (Polishing Deionization)

- Removes over 99% of remaining TDS
- Removes up to 99% of remaining silica
- Removes over 90% of organics (TOC)
- Removes 95% of remaining CO_2

High Performance Systems for Power Generation

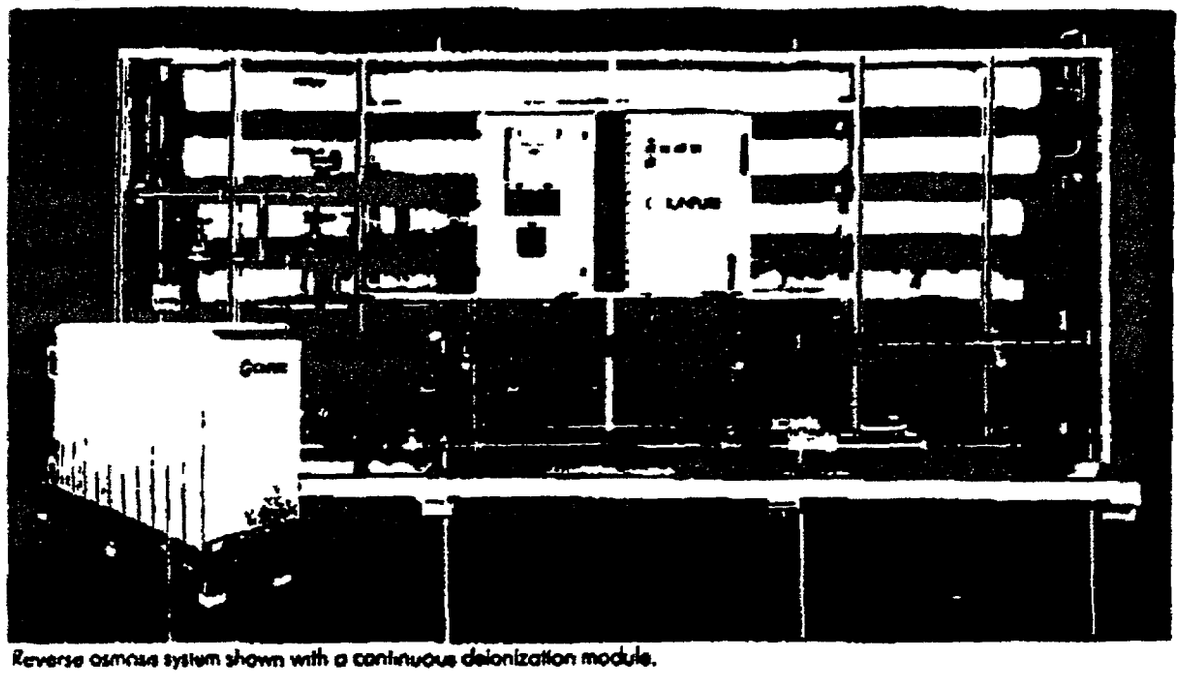

Reverse osmosis system shown with a continuous deionization module.

RO/CDI Benefits

- Eliminates hazardous chemicals
- Eliminates neutralization systems
- Consistent plant water quality (Fig 1)
- High water recovery (Fig 2)
- Continuous reliable operation
- Low operating costs (Fig 3)
- Process discharge meets effluent regulations and can be recycled or discharged directly to sewer

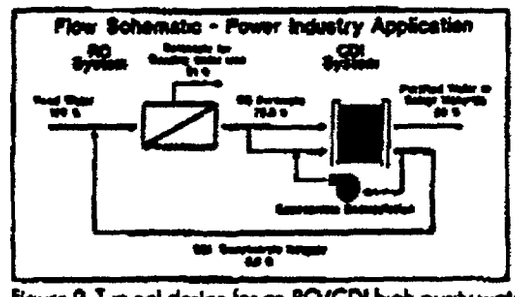

Figure 2 Typical design for an RO/CDI high purity water system

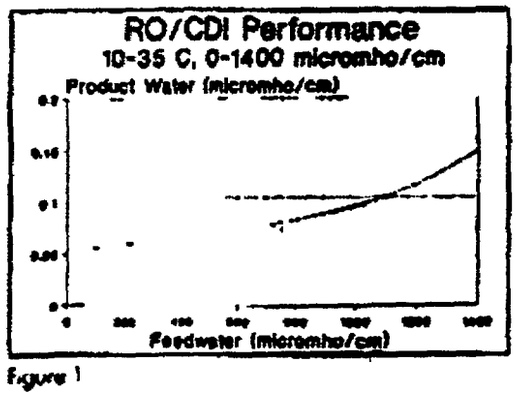

Figure 1

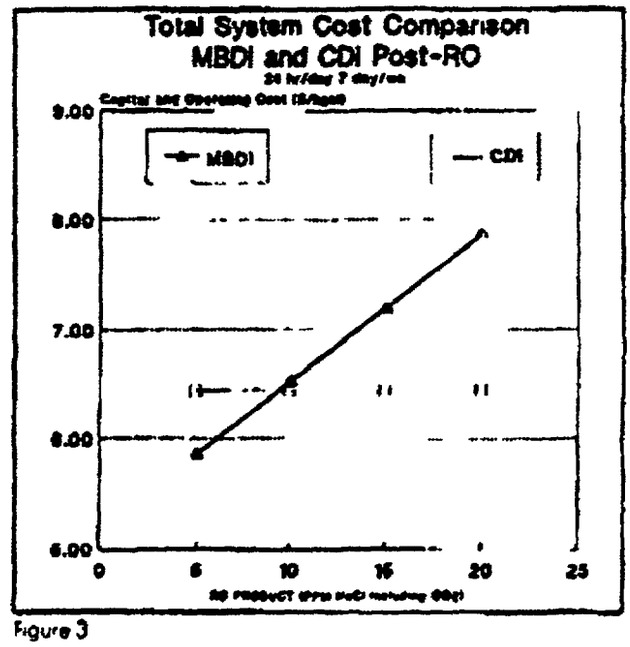

Figure 3

64

IONPURE

CDI Polishing

If you already have an RO system installed, you can still improve your process by simply replacing your regenerable system with a continuous deionization system. The addition of an Ionpure CDI system will produce water that meets all Power specifications including. Water quality greater than 0 1 micromho/cm (Fig 4), less than 10 ppb silica and less than 50 ppb TOC CDI can achieve this without the hazards and problems of chemical regeneration. With CDI, operating costs and maintenance are significantly lower than mixed bed deionization (Fig 5)

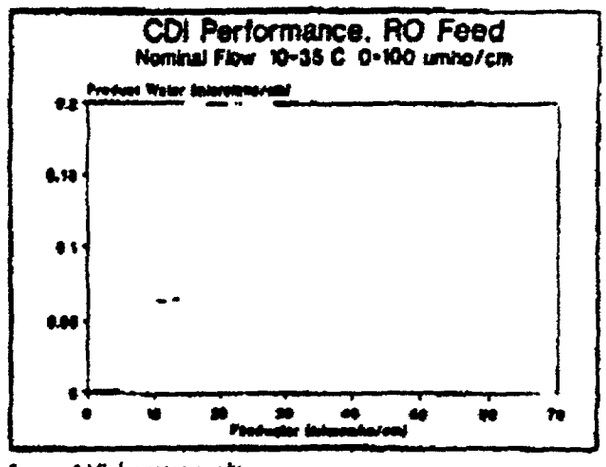

Figure 4 High water quality

System Support Services

Ionpure offers the industry s widest range of Engineering, System Support and Analytical Services From system design and installation to on-site system support and maintenance, our process engineers and field service technicians are available to assist you throughout the life of your system. Ionpure also markets the most comprehensive range of water purification products available — from prefilters to on line instrumentation

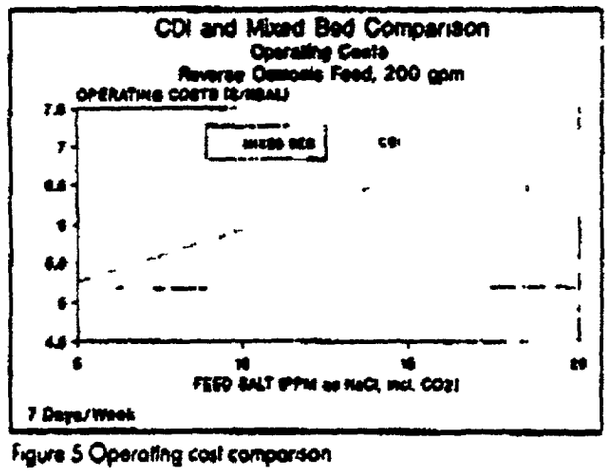

Figure 5 Operating cost comparison

For More Information

To find out more about these and other Ionpure products and services, call **1-800-783-PURE x5000.** At Ionpure you'll always find a Technical Support Representative available to answer your questions – It s part of our service.

U.S. Headquarters
Ionpure Technologies Corporation
10 Technology Drive
Lowell, MA 01851
Telephone: (508) 934 9349
(800) 783 PURE
Fax (508) 441-6025

European Headquarters
Ionpure Technologies S.A.R.L
1/3, Rue Pavlov
78196 Trappes Cedex
Paris
Telephone: (1) 34 82 1700
Fax: (1) 30 51 8651

International Distributer

Ionpure is a registered trademark of Ionpure Technologies Corporation.
Printed in U.S.A 03/92
Literature No 1P010

65