3114-94-26-05
PN-ACE-732
54
101031

The Hashemite Kingdom of Jordan

Ministry of Water and Irrigation

Water Quality Improvement and Conservation Project

Industrial Audit:

Arab Potash Company

Harza Environmental Services, Inc.

Development Alternatives, Inc.

USAID

The Technical Assistance Team Includes

Development Alternatives, Inc
Science Applications International Corp
Harza Environmental Services, Inc
Development Associates, Inc

United States Agency for International Development
Contract No 278-0288-00-C-4026-00

November 1994

AUDIT REPORT
ARAB POTASH COMPANY
JORDAN

Submitted to
United States Agency
For International Development

Submitted by
Development Alternatives, Inc

Prepared for·

Amman Chamber of Industry, Jordan
Ministry of Water and Irrigation, Jordan

Prepared by:
Harza Consulting Engineers and Scientists
Chicago, Illinois, U.S.A.
in association with
Royal Scientific Society
Amman, Jordan

HES 3333KV0A3x36
H0005HD 941019

2

PREFACE/ACKNOWLEDGMENTS

This report is the result of a 4-week study/audit/evaluation of the Arab Potash Company, Jordan The purpose of the study was to evaluate and identify potential pollution prevention/waste minimization and water conservation techniques which are appropriate The executive summary on the following pages outlines the consultants findings and actions during the study/audit/evaluation

Several individuals on the Water Quality Improvement and Conservation Project contributed to this report Dr Usama Mudallal of the Amman Chamber of Industry (Chamber), Engineer Rania Abdul Khaleq of the Ministry of Water and Irrigation (MWI), Mr Hamed Abu Obeid of the Water Authority of Jordan (WAJ), and Dr Riyad Musa and Eng Rafat Assi of the Royal Scientific Society of Amman, APC's Eng MNaser Al - Sadon, Plant Manager Engineers Jamal Amira, Musa Darras, Zaid Halaseh, and Ismail Daqour, of Technical Department, Engineers Samir Rahim, Said Rabi, Radwan Al-Kouz, of Production Department, Eng Zaki Abu Sanad, of Project Department, shared their knowledge with Mr Krishna Mayenkar, P E , of Harza Consulting Engineers and Scientists (Harza), Chicago, USA These technical staff worked under the direction of Dr Shawn R. Niaki, P E Pollution Prevention Program Director of Harza, who heads the WQIC component under which the study/audit/evaluation was housed It is from their combined expertise that this report was possible

Special appreciation is given to Dr Mohammed Bani Hani, Secretary General of MWI, Eng Koussai Quteishat, Secretary General of WAJ, Mr Khaldun Abuhassan, Chairman of the Chamber, Mr Walid Al-Khathib, Director General of the Chamber, Dr Muwaffaq Saqqar, Project Coordinator, Dr Raja Gadoun, Director of the WAJ Laboratories, Eng Randa Dufaha of the WAJ Laboratories, the members of the PP/WM working group from WAJ including Eng Abdul Wahab Matar, Eng Marwan Al-Tal, Eng Nabeel Hejazeen, Eng Mohamad Lafi, and to Development Alternatives, Inc , as represented by Edwin D Stains, Chief of Party, for their cooperation and confidence

EXECUTIVE SUMMARY

Development Alternatives, Inc (DAI) under contract with the United States Agency for International Development (USAID) is performing an Industrial Wastewater Discharge Prevention Program (IWDPP) in Amman, Jordan This Program is one of the four components of the Water Quality Improvement and Conservation Project (WQICP) funded by USAID The program is being performed by DAI with full coordination between the Ministry of Water and Irrigation (MWI) and the Amman Chamber of Industry (Chamber) Harza Consulting Engineers and Scientists (Harza), Chicago, United States (U S), was retained by DAI to lead the IWDPP Royal Scientific Society (RSS) of Amman, Jordan was selected as a local consultant to assist Harza with the IWDPP This program includes conducting the Pollution Prevention/Waste Minimization (PP/WM) audits, Feasibility Studies (FS), and designing demonstration units at selected industrial facilities

Based on a ranking methodology, the PP/WM committee selected ten industries with potential needs for PP/WM audits One of these industries is the potash industry The Harza/RSS team conducted an audit of Arab Potash Company (APC), representing the potash industry, as the first step of the IWDPP This report summarizes the results of the audit

POTASH MANUFACTURING PROCESSES.

The unit operations for potash production at the APC facility are primarily solar evaporation, sodium chloride deposition, and carnallite harvesting followed by potash refining The refinery process consists of removing magnesium chloride and sodium chloride to produce potash followed by crystallization, dewatering and drying of the final potash product.

The APC has recently developed a new process to produce potash through extensive research and pilot studies High quality carnallite is produced and is directly used to produce potash by the cold crystallization process This process is operated under ambient temperature and requires considerably less energy compared to the hot brine leaching process currently used by the company

AUDIT

The facility audit was conducted on August 13th and 14th of 1994 The APC staff and audit team members toured and inspected the facility Due to the complexity of the overall process and water management, several specific details remained unanswered during this two-day audit visit To assist APC staff, the audit team developed a supplemental questionnaire, and Dr Musa visited the facility again on August 21st and 22nd

4

AUDIT FINDINGS

The information collected during the APC facility audit through extensive personnel interviews, meetings and discussions with APC staff, site observations, and technical data provided by APC staff was compiled and thoroughly reviewed Our findings are as follows

Water Usage and Balance

The facility uses fresh water for two purposes the first as a raw material to produce potash (process water), the second as non-process related water for domestic purposes, including washing, equipment flushing, pump seals, irrigation, and makeup water in the power plant and cooling tower

The fresh water is obtained from groundwater wells and surface water The surface water is collected in the form of run-off from the areas in the vicinity of the APC facility

The key feature of the overall water usage is that the major portion of the fresh water is used for the potash production and lost through evaporation About 73 9 percent of the total fresh water is consumed for process purposes The remaining 26 1 percent of the total fresh water is used for non-process purposes

The major non-process related water consuming sources are

- In-Plant Floor Drains and Washwater,
- Pipes and Pump Packing Flushing in the Carnallite Area,
- Township Water Supply, and
- Power House Makeup Water

Wastewater Discharges

The following discharges from the APC facility are considered wastewater discharges

Intake Pump Station Flushing Water	8 m^3/hr
Facility Floor Drains, Washwater, etc.	70 m^3/hr
Sewage Treatment Plant Effluent	30 m^3/hr

The intake flushing water is discharged to the Dead Sea. All facility floor drains, washwaters, leaks and spills, are discharged to the Truce Line Flood Channel (TLFC) through a sewer The sewage treatment plant effluent, after biological treatment, is discharged to a nearby dry creek where it is partially evaporated, partially used by natural vegetation and partially percolated through the subsurface soil

5

Air Emissions

The potential for particulate emissions exists during drying, screening, and bagging operations All other processes are carried out in liquid phase Particulate emissions therefore, should be minimal

Sanitary lagoons and the sewage treatment facility are other sources of air emissions from which certain organic compounds can be volatilized and odor could be a problem However, due to isolated locations of both of these facilities, the arid environment, open atmosphere, and their relatively small size, volatile organic emissions and odor may not be a problem

Solid Wastes

The sources of solid wastes are

- Sodium chloride salt pile (tailings),
- Sludge in the sanitary lagoons,
- Sludge from the sewage treatment facility, and
- Sludge accumulated in the on-site run-off and spill storage pond

Storm Water Management

On-site storm water is collected in a pond which is also used to store accidental pipe line leaks and spills Apparently, the water is not reused, but gets evaporated and sludge accumulates in the pond. For the on-site storm water, there technically is zero discharge

Data Gaps

Data gaps exist in water quality and water quantity measurements No data are available on wastewater and sludges quality or quantity Fresh water is monitored primarily where used for processing purposes Non-process related water usages are not monitored

PP/WM AND WATER CONSERVATION OPPORTUNITIES

Based on the audit findings, several PP/WM and water conservation opportunities were identified They are briefly presented below

PP/WM Opportunities

Floor Drains. These high volume discharges appeared to be resulting from not properly controlling washing, cleaning and irrigation operations Good housekeeping and employee awareness of the importance of PP/WM and water conservation play an important role in reducing water consumption in areas where no controls exist Developing protocols, training

6

employees to use less water, and providing incentives for those who follow water conservation measures are some of the key factors in reducing waste generation, water consumption, and pollution The key to common sense PP/WM is getting people to pay attention to reducing waste generation when and where it first occurs

Other options are

- Reduce spills, overflows, and leakages, by good housekeeping and planned preventive maintenance

- Collect all floor drains, pump flushing water, and floor washings in a tank(s) and monitor the flow after each application Let the employee responsible for cleaning also be responsible for monitoring how much water is used per event

- Install flow meters to monitor each water usage and record water volume for each application

- The APC has a dry vacuum system in place They should maximize use of this system

- Eliminate the cause of spillage

- Sweep up dried material

- Use timer controlled valves for controlling washwater

- Utilize water saving equipment as much as possible Different types of water saving equipment include flow regulating device, flow shut-off valves, nozzles, overflow preventors, etc.

- Provide dikes, berms and secondary containment for all storage facilities and operating areas Collect all floor drains by implementing properly designed drain collection system.

- Provide additional capacity to store floor drains and leaks, if necessary

- Recycle and reuse all wash water efficiently as many times as possible before it is finally discharged to the flood channel in the form of limited blow down

The above measures should reduce drainage wastes volume discharged to the flood channel

To further reduce the pollution load to the TLFC, the drainage wastewater would probably require treatment to remove suspended soils, possibly adjust pH and remove metals Occasionally floor drains could contain oils and organics

Sewage Treatment Plant Sludge and Effluent To control the water use, meters should be installed for all water users to identify heavy water users The water use can be minimized using aerated shower heads, devices that control the water flow but provide the same pleasure of high flow shower heads Toilets can be modified to control the flush water volume by providing a partition and adjusting the float height Drip or trickle irrigation techniques can be used to irrigate gardens All plumbing, faucets, and other outlets can be checked routinely and repaired to prevent leaky pipes, valves, and faucets

The sewage treatment influent and effluent must be monitored for their quality and quantity by installing metering and sampling devices

In addition, APC should design and construct a properly lined containment area with leachate and gas collection systems for sewage treatment plant sludge Alternatively, the sludge can be dried using sludge beds, and dried sludge can be used as fertilizer if it meets appropriate standards for suitable applications

The APC should also install groundwater monitoring wells at the effluent and sludge disposal locations to monitor underlying aquifers currently used to supply potable water to determine if they are impacted by the sewage treatment plant effluent discharge or leachates from buried sludge Such monitoring should continue as long as facilities are in operation

The available maps show that the drinking water supply for the Township is provided by wells located within 2,500 meters of the Township location It is, therefore, important that the sewage treatment plant effluent disposal is managed carefully and prudently to prevent groundwater contamination Remediating contaminated aquifer can be costly

Sanitary Lagoons & Storm Water Pond: Increase dike heights for storm water pond and sanitary lagoons to prevent washouts during heavy storms

Tailing and Waste Brine: The APC should explore and install tailings and waste brine processing facilities to manufacture other chemicals, if profitable

Evaluation of Local Hydrogeology As part of the overall PP/WM strategy, APC should conduct studies to evaluate and understand local hydrogeology in the Lisan formations A better understanding of the local hydrogeology will assist APC in the long term to manage wastewater discharges prudently by using appropriate treatment, storage, and disposal methods while monitoring underlying aquifers

Water Conservation Potential

Water conservation opportunities, in addition to those currently practiced by the APC facility, still exist These opportunities are discussed below It should be noted, however, that any aspect of water conservation should be weighed against its benefits and associated costs Any water conservation measure which results in cost savings and directly affects pollution, (i e ,

prevents it from occurring) should be implemented first to protect the environment The measures discussed below should be reviewed bearing in mind the above philosophy In addition, further engineering studies will need to be performed to determine the feasibility of the measures prior to implementation

Process Water Category

1 The APC should explore the feasibility of replacing the whole or portion of the current hot leach process by the cold crystallization process to reduce fresh water requirements

2 The APC should continue to look for innovative process approaches to reduce the water consumption without affecting the product quality

3 Additional thickeners should be used to manage increased water and recoverable potash flow from carnallite ponds, thus reducing water wasted to the sewer

4 The APC staff should carefully monitor and evaluate all process water usages and optimize them to attain additional water savings, if feasible

Non-Process Water Category· It should be noted that APC currently reclaims and recycles about 140 m^3/hr of water from boiler makeup water treatment system wastes, scrubber water, and other non-process related water However, additional opportunities exist to conserve non-process water The primary areas are

1 Floor drains and wastewaters Follow the PP/WM measures as described for floor drains and domestic water supply

2 Pipe flushing water To reduce water consumption for pipe flushing, explore options such as double walled pipes with heating mechanism to avoid crystallization, early warning device installation, use of mobile tanker truck, installation of mechanical scrapper device and increasing brine velocity Any combination of such options will be more effective

3 Pump packing flushing water Pump packing flushing water can be reduced by changing the pump type, heating packing material or switching to brackish water

4 Domestic water supply to the Township The domestic water usage can be reduced as discussed earlier by reducing water usage for shower, toilets, and gardening and preventing leaky pipes, faucets, etc

9

5 Sewage Treatment Plant Effluent The treated sewage treatment plant effluent can be further treated as necessary and recycled and reused to flush intake pump station, to makeup cooling water losses and for irrigation thus reducing fresh water usage

6 Power house makeup water Power house makeup water can be reduced by modifying reverse osmosis (RO) process to a 2 or 3 stage RO process

7 Brackish water and storm water The APC has invested about 20 million dollars in investigating and installing wells to recover brackish water to replace current fresh water use The prject is nearing completion When complete, resulting brackish water will replace about 85 percent of the fresh water In addition, storm water can be collected and used with suitable treatment, if necessary According to APC staff, as much as 85% of the fresh water can be replaced with the brackish water

With the current brackish water project near completion, the APC anticipates saving as much as 628 m^3/hr or 62 8 percent of the total current fresh water usage of 1,000 m^3/hr Iff recommended PP/WM and water conservation measures are evaluated and implemented, if found to be feasible and cost effective, the APC should be able to save an additional 196 m^3/hr fresh water The attached table summarizes the suggested operation changes and water conservation opportunities with and without the current brackish water project

RECOMMENDATIONS

To achieve PP/WM and water conservation objective, our recommendations are

1 Implement PP/WM and water conservation measures discussed above

2 Study and evaluate aquifers for a long term supply of brackish water to replace fresh water Consult with MWI and WAJ staff Cooperative efforts will result in finding brackish water supply locations which are economically attractive to APC

3 Develop a PP/WM and water conservation policy as part of the APC management operating philosophy and distribute it to all departments

4 Implement the policy through specific goals and targets

5 Make it each person's responsibility to identify PP/WM and water conservation opportunities

6 Designate a PP/WM and water conservation coordinator to effectively implement this program

10

5 Sewage Treatment Plant Effluent The treated sewage treatment plant effluent can be further treated as necessary and recycled and reused to flush intake pump station, to makeup cooling water losses and for irrigation thus reducing fresh water usage

6 Power house makeup water Power house makeup water can be reduced by modifying reverse osmosis (RO) process to a 2 or 3 stage RO process

7 Brackish water and storm water The APC has invested about 20 million dollars in investigating and installing wells to recover brackish water to replace current fresh water use The project is nearing completion When complete, resulting brackish water will replace about 85 percent of the fresh water According to APC staff, as much as 85% of the fresh water can be replaced with the brackish water In addition, storm water can be collected and used with suitable treatment, if necessary

With the current brackish water project near completion, the APC anticipates saving as much as 628 m^3/hr or 62 8 percent of the total current fresh water usage of 1,000 m^3/hr Iff recommended PP/WM and water conservation measures are evaluated and implemented, if found to be feasible and cost effective, the APC should be able to save an additional 196 m^3/hr fresh water The attached table summarizes the suggested operation changes and water conservation opportunities with and without the current brackish water project

RECOMMENDATIONS

To achieve PP/WM and water conservation objective, our recommendations are

1 Implement PP/WM and water conservation measures discussed above

2. Study and evaluate aquifers for a long term supply of brackish water to replace fresh water Consult with MWI and WAJ staff Cooperative efforts will result in finding brackish water supply locations which are economically attractive to APC

3 Develop a PP/WM and water conservation policy as part of the APC management operating philosophy and distribute it to all departments

4 Implement the policy through specific goals and targets

5 Make it each person's responsibility to identify PP/WM and water conservation opportunities

6 Designate a PP/WM and water conservation coordinator to effectively implement this program

11

7 Publicize success stories and reward employees that identify cost-effective PP/WM opportunities

8 Train employees on aspects of PP/WM and water conservation that relate to their jobs

9 Perform a periodic assessment of PP/WM and water conservation by key management personnel, coordinator, and independent experts

10 Show management commitment through above actions and reinforce the policy through meetings and company functions

11 Let the company "Mission Statement" include "Better Product through Environmental Protection and Water Conservation"

RECOMMENDATIONS FOR ITEMS FOR FEASIBILITY STUDIES

We recommend that the following items be considered for feasibility level studies

- Sewage treatment plant effluent treatment and reuse for cooling tower makeup and intake pumping station flushing
- Installation of selective flow monitoring and controlling devices at some critical process water application locations and at selected Township residents to evaluate their impact
- Installation of double walled heated pipe with early warning system and mobile trailer truck system for pipe cleaning

Data developed through the feasibility studies can be used for designing demonstration units for field testing

Summary of Suggested Options Changes and Water Conservation Opportunities

Item		Current Fresh Water Use m^3/hr	Potential for Conservation m^3/hr (1)	Projected Fresh Water use m^3/hr	Suggested Measures
1	Washwater, Drains	70	63	7	1 Good housekeeping 2 Tighter controls 3 Use brackish water 4 Recycle and reuse 5 Use of water saver equipment
2	Pump Packing Flushing	60	60	0	1 Use of brackish water
3	Township	30	15	15	1 Better management 2 New techniques 3 Tighter controls
4	Pipe Cleaning	30	24	6	1 New techniques 2 Better management
5	Power House Makeup	25	14	11	1 Process modification 2 Better preventative maintenance
6	Irrigation	3	2	1	1 Reuse of treated domestic waste-water
7	Process	739	628 (0)[2]	111	1 Use of brackish water
8	Potable Water	10	0	10	None
9	Sanitary	10	3	7	1 Use of water saver equipment 2 Public awareness 3 Tighter control
10	Intake Cleaning	8	8	0	1 Use recycled treated domestic wastewater
11	Cooling Tower Makeup	15	7	8	1 Use recycled treated domestic wastewater
		1,000	824 (196)[2]	176	

Note (1) The figures are based on engineering judgement if suggested measures can be implemented successfully The APC can achieve this goal if suggested measures are proven technically and economically feasible

13

(2) The APC is currently investing $20 million to install additional wells to recover brackish water The figures in parentheses () represent the fresh water usage upon completion of the current project, for supplying brackish water

TABLE OF CONTENTS

1.0 INTRODUCTION 1
- 1 1 Background 1
- 1 2 Objective 1
- 1 3 Report 2

2 0 PROCESS OVERVIEW 3
- 2 1 Typical Processes 3
  - 2 1 1 Carnallite Processing 3
  - 2 1 2 Sylvinite Processing 3
- 2 2 New Cold Crystallization Process 4
- 2 3 Potash Manufacturing Processes at the APC Facility 5
  - 2 3 1 Existing Process 5
  - 2 3 2 New Cold Crystallization Process 7

3 0 AUDIT PROCESS 9
- 3 1 Audit Coordination 9
- 3 2 PP/WM Background Material Preparation 9
- 3 3 Pre-Inspection Meeting 10
- 3 4 Audit 11
- 3 5 Post-Inspection Meeting 11

4 0 AUDIT FINDINGS 13
- 4 1 Water Usage and Balance 13
- 4 2 Wastewater Discharges 13
- 4 3 Air Emissions 15
- 4 4 Solid Wastes 15
  - 4 4 1 Salt Pile (Tailings) 15
  - 4 4.2 Sludge from Sanitary Lagoons 15
  - 4 4.3 Sludge from the Sewage Treatment Facility 16
  - 4 4 4 Sludge Accumulated in the Storm Water Storage Pond 16
- 4 5 Storm Water Management 16
- 4 6 Data Gaps 16
  - 4 6 1 Water Quality 16
  - 4 6 2 Water Quantity 17

5 0 POLLUTION PREVENTION/WASTE MINIMIZATION 18
- 5 1 Pollution Prevention/Waste Minimization 18
  - 5 1 1 Floor Drains 18
  - 5 1 2 Sewage Treatment Plant Effluent 20
  - 5 1 3 Sanitary Lagoons 21
  - 5 1 4 Storm Water Pond 21
  - 5 1 5 Sodium Chloride Tailings 22

5 1 6 Magnesium Chloride Brine 22
5 1 7 Sewage Treatment Sludge Disposal 22
5 2 Evaluation of Local Hydrogeology 23

6 0 WATER CONSERVATION POTENTIAL 24
6 1 Process Water Category 24
6 1 1 Process Change 24
6 1 2 Addition of Thickeners 24
6 1 3 Process Water Use Optionization 25
6 2 Non-Process Water Category 25
6 2 1 Floor Drains and Washwaters 25
6 2 2 Pipe Flushing Water 26
6 2 3 Pump Packing Flushing Water 28
6 2 4 Domestic Water Supply 28
6 2 5 Power House Makeup Water 28
6 3 Irrigation 29
6 4 Other Opportunities 29
6 5 Use of Brackish Water to Replace Fresh Water 29
6 6 Use of Run-Off Water 30

7 0 CONCLUSIONS AND RECOMMENDATIONS 31
7 1 Recommendations 32

8 0 FOLLOW-UP ACTIONS 35

APPENDICES

Appendix A Audit Questionnaire
Appendix B Additional Questionnaire
Appendix C Backup Information Provided by the Industry
Appendix D Background Material Report
Appendix E Applicable Water Quality Criteria
Appendix F Potash Manufacturing Facility Photos

17

TABLES

Table 1 Percentages of Fresh Water Usages at the APC Facility
Table 2 Fresh Water Balance, Arab Potash Company
Table 3 Summary of Suggested Operational Changes and Water Conservation Opoortunities

18

FIGURES

Figure 1 Potash Manufacturing Process Block Flow Diagram

Figure 2 Cold Crystallization Process Block Flow Diagram

Figure 3 Fresh Water Flow Balance

Figure 4 Potash Refinery Schematic Process Flow Diagram

Figure 5 Schematic Process Flow Diagram for Production of Magnesium and Chlorine via $MgCl_2$ Electrolysis

Figure 6 Schematic Process Flow Diagram for Production of Sodium Metal via NaCl Electrolysis

Figure 7 Schematic Process Flow Diagram for Production of Sodium Chlorate via NaCl Electrolysis

Figure 8 Schematic Process Flow Diagram for Production of Caustic Soda and Chlorine via NaCl Electrolysis

Figure 9 Schematic Process Flow Diagram for Production of Bromine from Magnesium Brines

1 0 INTRODUCTION

This report presents the findings of an audit conducted for pollution prevention and waste minimization (PP/WM) for a potash manufacturing facility owned and operated by the Arab Potash Company (APC), Amman, Jordan The report also includes project background and objectives, brief process descriptions, audit process details, potential for PP/WM and water conservation, conclusions, recommendations, and follow-up actions

1.1 Background

Development Alternatives, Inc (DAI) under contract with the United States Agency for International Development (USAID) is performing an Industrial Wastewater Discharge Prevention Program (IWDPP) in Amman, Jordan This Program is one of the four components of the Water Quality Improvement and Conservation Project (WQICP) funded by USAID The program is being performed by DAI with full coordination between the Ministry of Water and Irrigation (MWI) and the Amman Chamber of Industry (Chamber) Harza Consulting Engineers and Scientists (Harza), Chicago, United States (U S), was retained by DAI to lead the IWDPP Royal Scientific Society (RSS) of Amman, Jordan was selected as a local consultant to assist Harza with the IWDPP This program includes conducting the PP/WM audits, Feasibility Studies (FS), and designing demonstration units at selected industrial facilities

The PP/WM techniques are defined as any techniques to prevent or reduce waste generation by source reduction or recycling activities The activities must reduce either the volumes or the concentrations of pollutants generated prior to treatment, storage, or disposal of the waste

Based on a ranking methodology, the PP/WM committee selected ten industries with potential needs for PP/WM audits One of these industries is the potash industry The Harza/RSS team conducted an audit of Arab Potash Company representing the potash industry as the first step of the IWDPP This report summarizes the results of the audit.

1.2 Objective

The objectives of conducting a PP/WM audit were to understand the water and wastewater management practices currently employed by APC, to identify waste sources, and to assess opportunities for PP/WM and water conservation that may exist at the facility

The findings of the audit were used to develop recommendations and follow up actions to assist APC in assessing the extent of pollution Suggested approaches for water conservation and process modifications to achieve additional PP/WM and wastewater treatment were provided

1 3 Report

This report contains APC's potash process description, audit procedures, audit findings, and conclusions derived from the audit findings Recommendations and follow-up actions necessary to assess the extent of pollution as well as to implement PP/WM and water conservation measures at the APC facility are also included

Appendices A, B, and C of the report contain information collected during the audit, an additional questionnaire prepared to collect the water use information and the process and water balance information provided by APC, respectively A copy of the Background Material Report is included, as Appendix D Applicable regulatory standards for water quality are included as Appendix E Appendix F contains photographs of the potash manufacturing facility The reference material collected by Harza in the U S , as part of this audit program is presented in a separate binder

2 0 PROCESS OVERVIEW

Potash is a valuable component in the agriculture industry It is the product of various chemical and industrial processes that extract it from very concentrated brine solutions Potash is produced in three chemical forms muriate of potash (KCl), sulfate of potash-magnesia (K_2SO_4 $2MgSO_4$), and sulfate of potash (K_2SO_4) Its use in crop fertilization has made the agriculture industry much more productive and efficient It has also aided in the advancement of the chemical industry

The potash mineral industry converts naturally occurring minerals into forms suitable for use in chemical and fertilizer production The conversion of naturally occurring minerals into fertilizers involves both surface and underground mining and many beneficiation steps Current processing methods are discussed in the following sections

2.1 Typical Processes

Potash is primarily derived from two sources ore and brine In conjunction with one of these two sources, water is the only other significant raw material

Potash ore (as KCl) is generally classified into one of two categories carnallite or sylvinite These classifications are based upon the chemical composition of the ore, which is largely a function of the ore's geographic origin Processes used to convert these ores into potash are described below, along with the processes used to convert brine to potash

Potash (as $K_2SO_4.2MgSO_4$ or K_2SO_4) is produced through the mining of an ore known as langbeinite Langbeinite was not considered further because processing operations only indirectly correlate with the processes used by APC

2.1 1 Carnallite Processing

Carnallite is a mineral, with the chemical formula KCl $MgCl_2$ $6H_2O$ Carnallite can be decomposed by using a regulated amount of water to dissolve the magnesium chloride ($MgCl_2$) without dissolving the potassium chloride (KCl) Sodium chloride (NaCl) is also left undissolved in most cases, so a sylvinite separation process (refer to Section 2 1.2) must follow

To handle fluctuations in ore quality, the $MgCl_2$ leaching step is normally a multistage, countercurrent operation To minimize KCl losses, a bleed stream from the sylvinite process instead of fresh water is used for leaching

2.1 2 Sylvinite Processing

Sylvinite ore is a mixture, in varying proportions, of KCl and NaCl crystals Several processes are used to separate potash from the ore Following is a discussion of some of these methods

Hot Leaching Process This process takes advantage of the different solubilities of KCl and NaCl at varying temperatures The KCl is more soluble in hot water than in cold, NaCl's solubility varies only slightly within the temperature range of 20° C to 100° C In solutions saturated with respect to both KCl and NaCl, the solubility of NaCl further decreases at the higher temperatures The crushed ore is mixed with recycled brine, heated almost to boiling, in sufficient quantities to dissolve the KCl This brine is nearly saturated with NaCl and KCl After saturation with KCl, the brine is cooled by vacuum evaporation, resulting in KCl crystallization Brine saturated with NaCl is either recycled or subjected to evaporation and crystallization.

Flotation Process Most of the potash of Canada and the U S is recovered from the ore by flotation process methods The essentials of this process are to treat the ore with a hydrophobic material, which will selectively coat one of the constituents (typically the KCl) of the ore Pressurized air is then bubbled through an ore slurry The air bubbles attach themselves to the coated particles and float them to the surface, while the uncoated particles sink Some plants have been built in which the NaCl is floated away from the KCl, but generally the reverse is the more desirable process On a large scale, and particularly with high-analysis ores, the flotation process is much cheaper than one involving dissolution and crystallization

Other Methods Several other methods for separating KCl crystals from NaCl crystals have been used or proposed These include tabling and electrostatic separation. None are presently of commercial importance, however

Combination Methods Depending on factors such as quality and fuel cost, many variations of the aforementioned methods are used, including combinations of methods It is common to combine flotation with leaching

2.2 New Cold Crystallization Process

This process was developed by APC through extensive research and pilot studies since 1989 High quality carnallite is produced and is directly used to produce potash by the cold crystallization process This process is operated under ambient temperature and requires considerably less energy compared to the hot brine leaching process currently used by the company The key features of this process are

- Separating coarse high purity fraction,
- Concentrating finer lower purity fraction by selecting proper brine to carnallite ratio, using proprietary reagent for flotation process, and enrinching carnallite by maximizing removal of NaCl crystals,
- Effectively removing NaCl salt crystals during carnallite beneficiation, and

- Using high quality carnallite to produce potash by cold crystallization process

Crude potash is then wet screened prior to leaching, washing and dewatering to remove associated NaCl crystals and $MgCl_2$ rich brine

Specific details for the Cold Crystallization process are presented in Section 2 3 2 Figure 1 shows a cold crystallization process block flow diagram

2 3 Potash Manufacturing Processes at the APC Facility

The APC commenced production of potash in 1982 at a location 187 kilometers south of Amman in Ghor Al Safi on the shores of the Dead Sea. The early production of potash (as KCl) at this refinery was approximately 1 2 million tons annually However, six years later in 1988, production increased to 1 4 million tons, and according to estimates, should reach 1 8 million tons in 1994 with the aid of the recently developed and installed cold crystallization process

2.3 1 Existing Process

The unit operations for potash production that APC uses are primarily solar evaporation, washing, clarification, centrifuging, and crystallization Specific details of the process and unit operations are discussed below A potash manufacturing process block flow diagram is presented in Figure 2, and detailed refining processes are shown in Figure 3

Solar Evaporation. The process commences at the brine intake pumping station located on the Lisan Peninsula Four intake pumps (total capacity of 14 m^3/second) deliver approximately 200 million tons of brine per year to a gravity flow brine canal through a 1-kilometer pipeline The brine then flows 10 6 kilometers through the canal and eventually reaches the salt pond (SP1/SP2/SP3), which is the largest pond and has the highest evaporation rate in the system.

Deposition The salt pond, considered to be the most significant part of the process, is designed to perform the initial concentration of Dead Sea brine (density of 1 235 g/cc) Since the solar evaporation pond has such a high evaporation rate, most of the NaCl is rendered insoluble and is precipitated The reduction of water content of the brine brings the density to 1 298 g/cc

After evaporation in the salt pond, the brine is transferred to the pre-carnallite pond (PC-2) by gravity flow The pre-carnallite pond, acting as a control measure, maintains the brine composition at the carnallite point This is the point at which the brine is saturated with carnallite but no carnallite has yet precipitated The density is further increased to 1 303 g/cc The brine at this point contains 2 percent KCl

The last six carnallite ponds complete the evaporation process by precipitating the double salt carnallite Brine flows from Pond PC-2 to C-3 to C-2 to C-1 to C-5 to C-6, and finally to C-7 Brine from Pond C-7, which now contains little KCl and has a density of 1 340 g/cc, is discharged into the Truce Line Flood Channel (TLFC), and flows back to the Dead Sea

Carnallite Harvesting The precipitated carnallite in Ponds C-3, C-2, C-1, C-5, C-6 and C-7 contains 84% carnallite and 16% NaCl The average carnallite deposit thickness is 40-60 centimeter (cm) The carnallite bed is harvested in a slurry form from beneath the brine by six floating tracked harvesters, which are propelled by a four track system For optimum carnallite recovery, the harvesters are provided with control equipment, which allows for precise movement

After harvesting, the carnallite slurry is conveyed through floating lines to a set of booster pumps, which pump it to the refinery through steel pipes The refinery processes are described below (refer to Figure 3)

Refinery Processes The refinery processes consist of carnallite processing to remove $MgCl_2$ and sylvinite processing to remove NaCl This is followed by crystallization, dewatering, and drying of the final KCl product

> Carnallite Processing As previously stated, carnallite is a mineral It can be decomposed by using an appropriate stochiometric amount of water to dissolve the $MgCl_2$ without dissolving much of the KCl The carnallite is decomposed in two stages The resulting solids from decomposition are KCl and NaCl This mixture is known as sylvinite After decomposition, sylvinite is precipitated and waste brine, containing $MgCl_2$, is discharged from the process and returned to the pre-carnallite pond (PC-2) The sylvinite is dewatered and washed, and the resulting cake is taken to the sylvinite processing stage
>
> Sylvinite Processing The sylvinite cake is leached using four agitated tanks in a two-stage process The leaching process takes advantage of the solubility differential between KCl and NaCl as previously described
>
> Heated brine returned from the crystallization process is used to extract the KCl from the sylvinite cake The KCl is dissolved, leaving NaCl solids Saturated with KCl, the hot brine is clarified in a thickener The thickener overflow is pumped to the crystallization process and the underflow brine, containing NaCl crystals, is dewatered, repulped with waste brine, and pumped to a tailings pile
>
> Crystallization The hot brine from the thickener overflow, saturated with NaCl and KCl, is cooled successively in a five-stage draft tube baffle vacuum crystallizer system from 93°C to 49°C When cooled, under controlled

conditions, KCl loses its solubility and crystallizes The crystallized KCl forms a potash slurry, which must be dewatered and dried The remaining brine is recycled back to the sylvinite extraction.

Product Dewatering and Drying The potash slurry from the crystallizer is taken to the product hydro-cyclones where partial dewatering occurs The underflow of the cyclones is transported to centrifuges for further dewatering, while the overflow is returned back for leaching purposes along with the crystallizer brine

The caked potash from centrifuges is moved to an oil-fired concurrent rotary dryer to remove any moisture left in the product The dried product is sent to a fluidized bed cooler and then to the screening system. Dust is gathered using dry cyclones and a wet scrubber system.

Screening and Compaction The dried and cooled product, in the screening process, is separated into two grades standard and fine Parts of the fine and standard grades are taken to the compaction plant where they are converted into granular product An anti-caking agent is introduced into all products in carefully controlled amounts to minimize the tendency of potash to amass during storage and shipment

Storage and Transportation The final product is stored at the plant product storage warehouse with a capacity of 60,000 tons, or it is placed in shipping bins from where it is loaded into bottom-dump trucks for delivery to a warehouse at the port of Aqaba.

2 3.2 New Cold Crystallization Process

This new process was developed to produce purer quality carnallite, prior to its decomposition, to produce KCl with guaranteed purity equal to or greater than 95 percent The unit operations involved in this process are briefly described below The block process flow diagram is presented in Figure 1

Carnallite Receiving Crude carnallite slurry is first benificiated by wet screening to separate the high-grade carnallite fraction, which is about one-quarter of the solids The high-grade carnallite (coarse carnallite) is fed directly to the cold crystallizers. Wet screen undersize slurry is mixed with brine discharge from the cold crystallizers overflow, which is at or near saturation, in a draft tube reactor When solar pond brine mixes with crystallizer brine in the reactor, crystallization of carnallite occurs as the brine mixture equilibrates Slurry from the reactor is densified in the carnallite thickener The overflow is returned to the evaporation ponds

Flotation Carnallite thickener underflow is benificiated by the flotation technique in which NaCl is floated and pumped to the tailings area. The denser fraction of the slurry is settled in a thickener Flotation thickener overflow is used as make-up brine

to the flotation cells and the excess pumped to the evaporation ponds Thickener underflow is dewatered in scroll/screen centrifuges Centrifuge cake (fine carnallite) is conveyed to the cold crystallizers and effluent is recycled to the flotation thickener feed

Crystallization Coarse and fine carnallites are decomposed in a two-stage crystallizer in the presence of water The KCl crystals are formed in the crystallizers. Crystallizer discharge slurry is wet screened to remove large particles Screen oversize is pumped to the tailings area along with flotation overflow slurry Screen undersize is directed to the leaching area

Leaching Processing In order to remove adhering high $MgCl_2$ brine from the crystallizer product, two-stage leaching and dewatering centrifuges are used to ensure the required 0 5% maximum $MgCl_2$ content in the dry product

Drying Centrifuge cake is dried to 0 1% moisture content in a concurrent rotary dryer fired with No 6 fuel oil The product is then cooled in a rotary cooler by a counter-current stream of atmospheric air

Screening Dry product is separated into two fractions, standard and fine, in the screening area

3 0 AUDIT PROCESS

The objective of the audit was to identify the potential for PP/WM, wastewater cleanup, and opportunities for water conservation appropriate for APC The following subtasks were conducted to complete the audit report

- Audit Coordination,
- PP/WM Background Material Preparation,
- Pre-Inspection Meeting,
- Audit,
- Post-Inspection Meeting, and
- Audit Evaluation Report

Activities completed under each of the subtasks are briefly described below

3 1 Audit Coordination

The Chamber informed APC about the intent and schedule of the audit An audit questionnaire, specifically developed for this PP/WM project (Appendix A), was included with the request to APC to fill out the questionnaire prior to the audit Because it was not possible for APC to supply requested information in a timely fashion, APC was requested to furnish at least an overall flow balance, process flow diagram and facility layout This information was furnished to the audit team during the audit visit of the facility

3.2 PP/WM Background Material Preparation

The objective of preparing the background material report was to identify the currently available techniques and clean technologies being practiced for PP/WM in the potash industry in the U S and elsewhere in the world This objective was achieved by performing a comprehensive literature review

The literature review included the following sources published literature, personal contacts with the U S Environmental Protection Agency (EPA), and conversations with personnel within the U S potash industry The literature consisted of PP/WM related articles, journal articles, conference proceedings, EPA documents and communications, and books on pollution and controls

As part of this task, Harza contacted several national and international potash manufacturing companies to determine if they have implemented any State-of-the-Art PP/WM techniques or water conservation measures As expected, the response was not very positive Harza, however, is continuing the search on these issues and will forward to the PP/WM committee any new information that becomes available

Based on the information of the facility operation that was made available to us and the information gathered through the available literature, Harza prepared the background material report (Appendix D) The background material report included general

information on the potash processing as well as specific information on the process used by APC Since all APC process details were not available at the time of preparation of this report in the U S, accuracy of specific details was questionable The intent, however, was to collect as much information as possible prior to conducting the audit

The report also contains preliminary suggestions for PP/WM and water conservation based on the limited information available at the time of preparing the report

Harza also prepared a report containing appropriate reference material gathered during our literature search This is submitted separately This reference material contains processes and waste management practices used in the similar facilities, primarily in the U S

The knowledge gained through the extensive literature search and process information provided by the PP/WM committee allowed Harza engineers to develop a good process understanding and to identify problems associated with water and waste management, including air emissions and solid wastes at typical potash manufacturing facilities

3 3 Pre-Inspection Meeting

The APC facility audit, including the pre-inspection meeting, was conducted on August 13 and 14, 1994 The initial audit team consisted of the following personnel

Mr Hamed Abu Obeid	Water Authority of Jordan
Ms Rania Abdul Khaleq	Ministry of Water & Irrigation
Dr Shawn Niaki	Program Director, DAI (Harza)
Mr Krishna Mayenkar	Lead American Consultant (Harza)
Dr Riyad Musa	Local Consultant (RSS)
Mr Rafat Assi	Local Consultant (RSS)

The pre-inspection meeting was held at the APC facility on August 13, 1994 The intent of this meeting was to inform APC staff about the conduct and objective of the audit and to understand process details as they relate to the fresh water utilization, wastewater generation, treatment and disposal, water recycling and reuse and the overall water management at the facility The audit team explained to APC staff the purpose of the audit The APC staff, then furnished to the audit team the following

- A report on the potash manufacturing;
- A schematic process flow diagram of the refinery process,
- A facility location map,
- A flow balance across the facility,
- A flow balance across the refinery, and
- A sewage treatment plant design information

Copies of the above materials are included in Appendix C

A general discussion was held on water usage within the facility The APC staff explained to the audit team major water consuming sources at the facility Since water is one of the raw materials used in selectively leaching potash from concentrated Dead Sea brine, the amount of water required in carrying out physical reactions such as dissolution and crystallization is critical The non-process related water usages including water requirements for equipment operation and maintenance were also discussed during this pre-inspection meeting.

3 4 Audit

The facility audit was conducted on August 14th The APC staff and audit team members toured and inspected the facility starting from the pumping station at the Dead Sea, and following the process through the solar evaporation pond, pre-carnallite pond, carnallite ponds, carnallite slurry booster pump station, and refinery facility The storm water collection and evaporation pond, sanitary waste lagoons, and sewage treatment facility for the Township (employee residential area) were also visited and general operations observed

Upon completion of the facility tour, the discussion continued on overall water usage and wastewater management practices currently employed Due to the complexity of the overall process and water management, several specific details remained unanswered during this two-day audit visit.

The audit team requested APC staff to provide specific details on certain water usages, and they agreed to it. To assist APC staff, the audit team developed a supplemental questionnaire (included in Appendix B), and Dr Musa visited the facility again on August 21st and 22nd

During the second visit, several unanswered questions were resolved Dr Musa also attempted to complete the audit questionnaire as appropriate and applicable to the APC facility The completed audit questionnaire is included in Appendix A.

3.5 Post-Inspection Meeting

Due to process complexity, the audit efforts had to be extended from one to three days The post-inspection meeting, however, was held on August 14th. The APC staff and audit team members reviewed and discussed the preliminary findings based on the facility tour and information provided by APC staff Although specific details were not available, the audit team identified the following areas with potential for PP/WM or water conservation.

- High quantity floor washings, flood drains and other flows discharging to the sewer,
- High quantity water usage by the Township,
- High quantity water usage as makeup water for boilers,
- Usage of storm water for operation,

- Usage of sewage treatment plant effluent for irrigation,
- Usage of $MgCl_2$ brine and NaCl for producing other chemicals, and
- Usage of other techniques to dissolve salt built up in pipes

A copy of the background material was given to APC staff for review They reviewed the document and provided the audit team with their comments Instead of updating the background material report, which was prepared in the U S with limited facility information, the audit team decided to incorporate their comments in this audit report

The information and waste management analyses presented in the subsequent sections of this report are based on the knowledge gained through the audit activities and technical support provided by APC staff

4 0 AUDIT FINDINGS

The information collected during the APC facility audit through extensive personnel interviews, meetings and discussions with APC staff, site observations, and technical data provided by APC staff was compiled and thoroughly reviewed Our findings are presented below

4 1 Water Usage and Balance

The facility uses fresh water for two purposes the first as a raw material to produce potash (process water), the second as non-process related water for domestic purposes, including washing, equipment flushing, pump seals, irrigation, and makeup water in the power plant and cooling tower

The fresh water is obtained from groundwater wells and surface water The surface water is collected in the form of run-off from the areas in the vicinity of the APC facility The overall fresh water balance is presented in Table 1 and details are shown in Figure 4

The key feature of the overall water usage is that the major portion of the fresh water is used and lost through the carnallite and sylvinite processing areas About 619 m^3/hr water is required for carnallite processing An additional 120 m^3/hr water is required for product (KCl) crystallization Thus 73 9 percent of the total fresh water is consumed for process purposes The remaining 26 1 percent of the total fresh water is used for non-process purposes

Based on the descending order of percentage of water usage, ten (10) water consuming sources were identified They are presented in Table 1

The major non-process related water consuming sources are

- In-Plant Floor Drains and Washwater,
- Pipes and Pump Packing Flushing in the Carnallite Area,
- Township Water Supply, and
- Power House Makeup Water

Together, these sources account for 21.5 percent of the total fresh water usage

The remaining five (5) water consuming sources together account for 4 6 percent of the total water consumption. Individually, each source consumes 1 5 percent or less of the fresh water

4 2 Wastewater Discharges

The operation at the APC facility is unique by its nature The Dead Sea, TLFC, and evaporation ponds can be considered a closed loop system where highly concentrated brine

is taken from the Dead Sea, NaCl and KCL are removed in evaporation ponds, and brine with magnesium salts is returned to the Dead Sea through the TLFC The TLFC and Dead Sea, however, are not assumed to be a part of APC property

The fresh water, on the contrary, becomes wastewater when discharged from the system after its specific use After its specific use, the water contains other contaminants which affect its characteristics Such water may or may not be suitable for its original application or human consumption unless treated appropriately Accordingly, the following discharges from the APC facility are considered wastewater discharges

Intake Pump Station Flushing Water	8 m^3/hr
Facility Drains, Washwater, etc.	70 m^3/hr
Sewage Treatment Plant Effluent	30 m^3/hr

The intake flushing water is discharged to the Dead Sea. All facility floor drains, washwaters, leaks and spills, are discharged to the TLFC through a sewer The sewage treatment plant effluent, after biological treatment, is discharged to a nearby dry creek where it is partially evaporated, partially used by natural vegetation and partially percolated through the subsurface soil

The intake flushing water contains the same dissolved salts present in the Dead Sea. Its quality, however, is expected to be better than the Dead Sea water because it is used only once to clean intake pipes

A similar argument can be made for floor washings and floor drains, which are discharged to the TLFC. The floor drains are expected to contain far less dissolved solids than the flood channel water They can, however, contain higher suspended solids, dissolved inorganic chemicals present at the site due to accidental spills and leaks, and oils and grease from cars and equipment leaks Expected contaminants of concern are pH, suspended solids, total dissolved solids, oils and grease, and possibly metals Considering the site specific environment and designated usage of water in the TFLC, the environmental impact of these discharges appears to be minimal.

Since no data for either influent or effluent quality are maintained, it was not possible to determine whether the wastewater treatment facility operates as intended. The effluent, however, will contain biodegradable residual organics, suspended solids, ammonia nitrogen, and possibly nitrates and phosphates The sewage treatment plant effluent discharged to a dry creek can percolate through the subsurface soil and impact underlying aquifers Since some vegetation is growing as a result of this wastewater discharge, it appears that the soil must be retaining moisture It was also brought to our attention that certain vegetation did not survive when the wastewater effluent was applied, indicating that ecologically the treated wastewater may not be safe for all vegetation.

4.3 Air Emissions

The potential for particulate emissions exists during drying, screening, and bagging operations All other processes are carried out in liquid phase Particulate emissions therefore, should be minimal The APC also discontinued use of electrostatic precipitators and currently is using wet scrubbers to wash gases from the rotary dryers The scrubber water is recycled to the reclaim water tank. During our visit, however, two particulate plumes were visible from the facility At the time of audit, six out of eight stacks were operating

Sanitary lagoons and the sewage treatment facility are other sources of air emissions from which certain organic compounds can be volatilized and odor could be a problem. However, due to isolated locations of both of these facilities, the arid environment, open atmosphere, and their relatively small size, volatile organic emissions and odor may not be a problem During our visit no odor was experienced

4.4 Solid Wastes

The sources of solid wastes are

- Sodium chloride salt pile (tailings),
- Sludge in the sanitary lagoons,
- Sludge from the sewage treatment facility, and
- Sludge accumulated in the on-site run-off and spill storage pond

These sources are briefly described below

4.4.1 Salt Pile (Tailings)

The Dead Sea brine contains 7.8% NaCl and 1 21% KCl This ratio suggests that for every ton of potash produced, 6 4 tons of sodium chloride salts are generated as a by-product For a yearly production of 1 4 to 1 8 million tons of potash, about 10 million tons of sodium chloride salt will be produced Assuming 95 percent is recovered in the solar evaporation pond, about 0.5 million tons (5%) is wasted as tailings every year Thus, if this salt is not used for any other application, it could be considered solid waste and it will continue to accumulate as long as the facility operates

4.4.2 Sludge from Sanitary Lagoons

Our discussion with APC staff revealed that apparently these lagoons have never been cleaned through their entire 16 years of operating life Since it is not possible to have sanitary wastes without any solids, one explanation could be that during storm events solids are washed out All water gets evaporated The transportation of sanitary sludge in the environment in an uncontrolled way is hygienically not a safe and acceptable practice, especially in an area with human activities

The washout can be considered an uncontrolled wastewater discharge into the environment Occasional washouts may not have a long term impact, but pathogens and bacteria present in the wastewater can be transported to nearby surface water bodies or to subsurface shallow groundwater, which if ingested by humans, could adversely affect human health

4 4.3 Sludge from the Sewage Treatment Facility

The sludge from the sewage treatment facility is disposed by burying it in the ground in the Lisan area It is not known if the disposal area is approved and permitted by the regulatory agency Any waste disposal facilities must be properly designed and require groundwater monitoring to ensure that leachate generated from the facilities does not contaminate underlying aquifers In each facility, a leachate collection system is generally installed to collect leachates The soil cover also must meet certain specifications so that gases such as methane, which is generated by sludge decomposition, are properly routed and vented or flared For safety, all such facilities are fenced and secured The sludge burying techniques followed by APC may not meet acceptable standards

4 4 4 Sludge Accumulated in the Storm Water Storage Pond

During the audit, a large amount of reddish brownish sludge in the pond was observed Due to the lack of specific analytical data, it was difficult to ascertain the quality of sludge and what is causing the red deposit. It could be an iron oxide or bromine compounds based on the input provided by APC staff

As discussed above for sanitary sludge, during heavy storms, this sludge may get washed out and contaminate nearby soils, and surface water bodies

4.5 Storm Water Management

On-site storm water is collected in a pond which is also used to store accidental pipe line leaks and spills Apparently, the water is not reused, but gets evaporated and sludge accumulates in the pond For the on-site storm water, there technically is zero discharge

4.6 Data Gaps

Data gaps exist in water quality and water quantity measurements They are presented in the following sections

4 6 1 Water Quality

No data are available for

1 Sewage treatment plant influent
2 Sewage treatment plant effluent

3 Facility drains and washings discharged to the flood channel via sewer
4 Influent to sanitary lagoons
5 Lagoon sludge
6 Storm water pond sludge

4 6 2 Water Quantity

The APC measures water flows throughout the facility at several locations as noted below

1 Fresh water flow to fresh water reservoir
2 Fresh water flow to the carnallite decomposing operation
3 Fresh water flow to the crystallizers
4 Fresh water flow in the reclaim tank.
5 Fresh water flow to the carnallite thickener to washout potash solid particles

Flows not monitored are

1 Fresh water flow for pipe cleaning
2 Fresh water flow to pump packing
3 Fresh water used for washing and cleaning
4 Fresh water to the Township
5 Fresh water to Hussein Camp
6 Inplant potable water
7 Fresh water to irrigation.

Basically, water required for processing is carefully monitored while water used for non-process related activities is not monitored

To improve water and wastewater management, several water flows need to be monitored so that wastewater sources can be identified, quantified and controlled Similarly, all wastewater discharges and solid wastes periodically need to be analyzed to monitor and control the quality of wastes managed or discharged

5 0 POLLUTION PREVENTION/WASTE MINIMIZATION POTENTIAL

The pollution prevention and waste minimization terms are sometimes used interchangeably But each term has a different meaning Pollution prevention means to prevent the pollution to occur in the first place It costs 10 to 100 times more to treat pollution once it is created than to avoid generating it By employing waste minimization techniques, less pollution is created thus reducing the treatment cost At the APC facility, the following PP/WM opportunities exist

5 1 Pollution Prevention/Waste Minimization Potential

The PP/WM opportunities exist for floor drains, the sewage treatment facility, sanitary lagoons, storm water pond operations, sodium chloride tailings storage, and sewage treatment sludge disposal

5 1 1 Floor Drains

A flow of 70 m^3/hr constitutes about 7 percent of the total fresh water usage at the facility (1,000 m^3/hr) This amount appears to be relatively high particularly when most operations are carried out in liquid phase

During our site visit, several pipe leaks and uncontrolled water discharges through hoses (2 5 cm to 7 5 cm in diameter) were noted across the manufacturing areas These high volume discharges appeared to be resulting from not properly controlling washing, cleaning and irrigation operations Good housekeeping and employee awareness of the importance of PP/WM and water conservation play an important role in reducing water consumption in areas where no controls exist Developing protocols, training employees to use less water, and providing incentives for those who follow water conservation measures are some of the key factors in reducing waste generation, water consumption, and pollution. The key to common sense PP/WM is getting people to pay attention to reducing waste generation when and where it first occurs

Other options are

- Reduce spills, overflows, and leakages by good housekeeping and planned preventive maintenance

- Collect all floor drains, pump flushing water, and floor washings in a tank(s) and monitor the flow after each application. Let the employee responsible for cleaning also be responsible for monitoring how much water is used per event Install flow meters to monitor each water usage and record water volume for each application

- The APC has a dry vacuum system in place They should maximize use of this system

- Eliminate the cause of spillage Do not wash it down the drain

- Sweep up dried material Do not flush to drain

- Use timer controlled valves for controlling washwater This will help control the amount of water used for each washing

- Utilize water saving equipment as much as possible Different types of water saving equipment include

  - Flow Regulation Devices When these devices are inserted into a water line, increasing pressure restricts flow to a constant needed rate

  - Flow Shut-Off Devices The most useful devices are finger operated shut-off valves, or guns, with nozzles on the ends of cleanup hoses When finger pressure is released, water flow stops

  - Nozzles Nozzles use less water than drilled pipe sprays For faster, more efficient cleaning, a "Vee" type nozzle is preferred

  - Overflow Preventors These devices are employed to prevent overflowing of containers, tanks, or reservoirs, thus minimizing spills Most of these devices are usually float or electronic probe operated

- Provide dikes, berms and secondary containment for all storage facilities and operating areas Collect all floor drains by implementing properly designed drain collection system.

- Provide additional capacity to store floor drains and leaks, if necessary

- Recycle and reuse all wash water efficiently as many times as possible before it is finally discharged to the flood channel in the form of limited blow down.

The above measures should reduce drainage wastes volume discharged to the flood channel

To further reduce the pollution load to the TLFC, the floor drain wastewater would probably require treatment to remove suspended soils, possibly adjust pH and remove metals Occasionally floor drains could contain oils and organics

There are numerous proven technologies to remove suspended solids, metals, oils (petroleum hydrocarbons), and other organics For solids, metals, and minor

amounts of oil, the treatments are coagulation, clarification, filtration, hydroxide precipitation, and neutralization. If water analysis shows the presence of organics or petroleum hydrocarbons, carbon absorption treatment can be added based on the level of contaminants present

To allow routine monitoring of floor drain wastewater, all floor drains can be diverted through a single outfall to the sewer A parshall flume can be designed and installed to monitor the flow as well as to sample wastewater

5 1 2 Sewage Treatment Plant Effluent

The sewage treatment plant effluent is currently discharged into a dry unnamed creek (Wadi) As discussed under the audit findings, a continuous flow of sewage treatment plant effluent could result in a portion of water percolating through the underlying soil and eventually contaminating subsurface aquifer(s) If the aquifer(s) water is used for drinking purposes, the water quality could adversely affect human health The constituents of primary concern are pathogens and nitrates Both have an adverse effect on human health

If an option to use the effluent for irrigation or facility operation is considered feasible, an additional treatment such as multimedia filtration followed by carbon absorption and/or reverse osmosis may be required to meet the irrigation standards or criteria established by APC for an operational use The treated water can be transported to the facility through new pipelines currently being installed If the water quality is suitable for irrigation, then it can be used to irrigate nearby farms and gardens with proper controls The applicable standards for irrigating different crops are included in Appendix E

Further PP/WM can be achieved by reducing the domestic wastewater flow The reported figure of 30 m^3/hr of domestic wastewater, generated from a community of 2,000 population at the Township, seems to be excessively high In the U S, the water consumption per capita is about 100 gallons per day (0.38 m^3/day) The wastewater, considering 80 percent of the water consumption, is about 0.3 m^3/day per capita. Based on this rate, the total domestic wastewater flow from the Township is expected to be about 600 m^3/day or 25 m^3/hr The water consumption per capita in Jordan, however, as we understand, is about 0 1 m^3/day Translating this into wastewater flow, the total domestic wastewater at the Township should not exceed 160 m^3/day (0 8x0 1x2,000) or 6 6 m^3/hr If the reported figure of 30 m^3/hr is assumed to be correct, it is 4 to 5 times higher than what is normally anticipated. This indicates that a large amount of water is wasted through leaks, carelessness, or misuse It therefore appears that a savings of about 50 percent of water usage (i.e 15 m^3/hr) is feasible This may also assist in improving treatment plant efficiency by converting the system with 100 percent effluent recycle Such a system will operate at the design flow of 30 m^3/hr but at a higher efficiency

To control the water use, meters should be installed for all water users to identify heavy water users The water use can be minimized using aerated shower heads, devices that control the water flow but provide the same pleasure of high flow shower heads Toilets can be modified to control the flush water volume by providing a partition and adjusting the float height Drip or trickle irrigation techniques can be used to irrigate gardens All plumbing, faucets, and other outlets can be checked routinely and repaired to prevent leaky pipes, valves, and faucets

The APC has instituted a policy of charging metered customers for the water consumption above 35 m^3 per month These limits can be reviewed and further lowered if they appear to be high based on the above discussion

To prevent groundwater contamination, APC should initiate monitoring the effluent quality, immediately If the sewage treatment plant effluent quality indicates that the facility is not performing as intended, an appropriate upgrading will be required to control the effluent quality

The APC should also start monitoring groundwater quality by installing a couple of wells at the disposal area and one background well Quarterly monitoring over a period of two years will indicate whether the groundwater has been impacted by the existing disposal practices The parameters to be monitored will be pH, nitrates, total dissolved solids, phosphates, and total organics Chlorides and sulfates can also be monitored on an annual basis An increasing trend in concentrations will indicate a possible impact on the groundwater

The available maps show that the drinking water supply for the Township is provided by wells located within 2,500 meters of the Township location. It is, therefore, important that the sewage treatment plant effluent disposal is managed carefully and prudently to prevent groundwater contamination Remediating contaminated aquifer can be costly

5.1.3 Sanitary Lagoons

Another aspect of pollution prevention is to prevent pollution of other media by proper waste management. At the APC facility, an overflow or washout from sanitary lagoons could contaminate nearby soil, surface water bodies, or subsurface waters during heavy storm events This can be prevented by increasing the dike height to contain storm water resulting from a 100-year storm event

5.1.4 Storm Water Pond

A situation similar to the one described above could develop for the storm water storage pond Sludge or water overflow or washout during heavy storms events can be prevented by increasing the dike height to contain storm water resulting from a 100-year storm event

5 1 5 Sodium Chloride Tailings

Sodium chloride tailings from sylvinite processing operations provide another opportunity for pollution prevention. We understand that APC has plans to expand its operations to produce sodium and magnesium compounds as well as bromine Use of tailings in the production of chemicals would eliminate generation of this solid waste Figures 6 through 8 show typical processes for the production of sodium metal, sodium chlorate, sodium hydroxide, and chlorine The APC should also explore use of this salt to produce ion exchange regeneration grade salt for regeneration application.

As an example, in the production of sodium hydroxide and chlorine by the electrolytic process, NaCl brine, granular NaCl, and crushed rock salt are used and purified prior to electrolysis Similarly sodium chloride salt precipitated in the solar pond, although purer and better raw material to produce other chemicals, can be combined with tailings to manufacture other compounds This may result in recovering 100 percent of the salt and eliminating tailings

We also understand that APC has plans to use tailings to line the proposed C-4 Pond in the carnallite area as well as to sell it to the Azraq Society for manufacturing table salt.

5 1 6 Magnesium Chloride Brine

The magnesium chloride brine, although of a better quality than the Dead Sea brine, is considered a waste byproduct since it is discharged as a non-usable process stream to the TLFC.

During the audit visit, APC staff informed us about its future expansion plans to produce magnesium oxide, bromine, and possibly other magnesium, sodium, and potassium compounds The APC also should contact the Georgia Pacific Corporation, U.S., to pursue manufacturing de-icing material from $MgCl_2$ brine

Utilizing this waste byproduct stream to manufacture other products will minimize the volume of brine returned to the Dead Sea. However, the processes implemented to manufacture other products will also generate waste streams, which may be of better quality and lower quantity

5 1 7 Sewage Treatment Sludge Disposal

The current sewage treatment sludge disposal practice, as we understand it, is to bury the sludge in the ground If the sludge disposal facility is not properly designed, then leachate generated from buried sludge during wet seasons can percolate through soil and could contaminate groundwater If the sludge cover is not properly designed, then gases such as methane generated through anaerobic sludge decomposition could escape to the atmosphere Methane gas generally is collected and flared From

human safety and ecological point of view, the sludge covers are designed with a certain thickness and compaction so that pets and animals do not disturb the cover and expose the sludge to the atmosphere

A properly designed sludge disposal facility with liners, leachate collection and monitoring system, gas collection and discharge, soil cover, vegetation or gravel to control erosion, run-off and run-on controls, security fences, and groundwater monitoring system will prevent contamination of subsurface soil and groundwater as well as air pollution caused by methane and other gases

Another alternative is to utilize abundant solar energy to dry the sludge using properly designed sludge drying beds, and use dried sludge as fertilizer for a variety of crops if it meets applicable standards This approach is more cost effective and commonly used

5 2 Evaluation of Local Hydrogeology

As part of the overall PP/WM strategy, APC should conduct studies to evaluate and understand local hydrogeology in the Lisan formations A better understanding of the local hydrogeology will assist APC in the long term to manage wastewater discharges prudently by using appropriate treatment, storage, and disposal methods while monitoring underlying aquifers

6 0 WATER CONSERVATION POTENTIAL

The total water consumption at the APC facility, as discussed in Section 4 0, can be broadly categorized as

- Process Water, and
- Non-Process Water

The process water consumes about 73 9 percent of the incoming fresh water while the remaining 26 1 percent is consumed by the non-process related activities as discussed previously

Water conservation opportunities, in addition to those currently practiced by the APC facility, still exist. These opportunities are discussed below It should be noted, however, that any aspect of water conservation should be weighed against its benefits and associated costs Any water conservation measure which results in cost savings and directly affects pollution, (i e, prevents it from occurring) should be implemented first to protect the environment The measures discussed below should be reviewed bearing in mind the above philosophy In addition, further engineering studies will need to be performed to determine the feasibility of the measures prior to implementation

6.1 Process Water Category

The process water is one of the two raw materials required to produce potash Its needs are, therefore, dictated by the process chemistry and conditions that need to be maintained to produce the required potash quality Any deviations in water supply can directly and adversely impact the production quantity and quality Water conservation measures in the process water category can only be implemented by process modifications and application of innovative technologies such as the cold crystallization process

6.1.1 Process Change

Based on the information made available to us, the cold crystallization process requires approximately 2 m^3 less water per ton of potash produced compared to the existing hot leach process If the hot leach processes are entirely replaced by the cold crystallization process at the end of the existing system life period, an approximate savings of 320 m^3/hr can be realized That constitutes about 32 percent of the current water use of 1,000 m^3/hr

The APC should continue to look for innovative process approaches to reduce the water consumption without affecting the product quality

6 1.2 Addition of Thickeners

During auditing, it was brought to our attention that the recent installation of two additional floating carnallite harvesters has overloaded the carnallite washing and

Y3

processing thickeners This situation sometimes results in excess overflow, which can not be handled by the system, being discharged to the sewer and ultimately to the TLFC This is accounted for in 70 m^3/hr drainage flows identified in the flow balance

The APC staff also informed us that corrective measures are being taken to rectify this situation We believe that these measures may involve installation of additional thickeners or possibly using cold crystallization thickeners as a backup, if feasible Either way, additional thickeners should be used to manage increased water and recoverable potash flow from carnallite ponds, thus reducing water wasted to the sewer

6 1 3 Process Water Use Optionization

The APC staff should carefully monitor and evaluate all process water usages and optimize them to attain additional water savings, if feasible

6.2 Non-Process Water Category

It should be noted that APC currently reclaims and recycles about 140 m^3/hr of water from boiler makeup water treatment system wastes, scrubber water, and other non-process related water However, additional opportunities exist to conserve non-process water The primary areas are

- Floor drains and wastewaters,
- Pipe flushing water,
- Pump packing flushing water,
- Domestic water supply to the Township,
- Power house makeup water, and
- Storm water

The suggested water conservation options are presented below

6 2.1 Floor Drains and Washwaters

The water conservation measures are the same as PP/WM measures described in Section 5 0 of this report They are

- Management leadership to enforce PP/WM measures and good housekeeping by employee awareness, incentives, and rewards,

- Collecting all floor drains, washwaters, and overflows and reusing them as many times as possible, thus discharging only blowdown from the system The APC is collecting a portion of such flows including reverse osmosis (RO) rejects, ion exchange regeneration wastewater, and scrubber wastewater,

- Monitoring and logging washwater and floor drains Meters can be installed to all fresh water outlets used for washing and cleaning,

- Installing timer-controlled valves so that each wash operation will consume defined quantity of water,

- Use of vacuum to dry clean areas where possible to avoid using water;

- Sweeping up dried material and eliminating the cause of spillage, and

- Building berms and dikes around tanks and operating areas to contain all drains and leaks

It should be noted that the water balance shows that about 200 m^3/hr fresh water is pumped to the reclaim tank while 70 m^3/hr water is wasted and about 140 m^3/hr water is reclaimed Our recommendation is that if it does not affect the process directly, no fresh water should be delivered to the reclaimed water tank This tank should collect only the recoverable and reusable water for continued recycling Fresh water requirements should be met by using water directly from the fresh water tank. This will force the operator to use less water

6 2 2 Pipe Flushing Water

The following suggested options are for brine transfer pipes installed between the six carnallite ponds only The estimated water used for pipe flushing is 30 m^3/hr, which is about 3 percent of the total fresh water consumed The salts are deposited on pipe surfaces due to supersaturation conditions of the brine The existing practice of using water to flush and solubilize as much salt as possible and then remove the remaining salts manually by hammering it out appears to be successful and very economical. Suggestions presented here may not prove to be economically attractive over the present methods

The approaches suggested below are based on preventing the salt built up in the first place as well as improving the cleaning techniques to save water and labor by proactive actions

Prevent Crystallization. As we understand, the crystallization occurs due to supersaturation of brine Pipe surfaces provide a place to form salt crystal nuclei Once the seeds are formed, crystal growth occurs at a rapid rate It is quite possible that after each cleaning, the pipe surfaces not properly cleaned have some salt crystals attached to them. These attached crystals will continue to provide a base for new crystal growth, which will continue

To avoid such crystal growth, one option is to maintain a clean pipe surface in contact with water and at a temperature 5°C to 10°C higher than the temperature of flowing brine This will result in formation of a thin film of brine, say 4-5

millimeters, at the pipe surfaces with a temperature 5°C to 6°C higher than the bulk of the brine flowing through the pipe

It is also known that the velocity of a water molecule is lower at the pipe surface and maximum at the center of the pipe A thin film at a higher temperature at the pipe surface will constantly maintain saturated or subsaturated conditions and will prevent forming any crystal nuclei Any nuclei formed above this film will be carried away by water flowing at a relatively higher velocity

A double walled pipe with embedded electrical coils (only at the wetted surface) and outside insulated material can serve this purpose Allowing for continuous heat loss due to convection, the pipe can be heated a few degrees higher than the temperature of the required water film.

Early Warning Device All pipes can be furnished with a photoelectric or similar other techniques which will detect higher turbidity due to salt crystal formation Such a device will allow the APC operator to flush and clean pipes at an early stage of salt formation. The turbidity signals can be sent back to the central control room from where a decision can be made as to which pipe is ready for flushing

We believe that flushing pipes at an early stage of salt formation will result in a better cleaning efficiency and reduce salt attached to the pipe surfaces which provides nuclei for continued crystallization.

Use of Mobile Tanker Truck to Flush Pipe In lieu of using once through water, a mobile tanker truck can be used to carry fresh water and hoses All pipes can be provided with an inlet and outlet nozzles The truck operator can close the pipe, drain brine into the pond, connect hoses to pipes with quick disconnect couplings and circulate the fresh water through the pipe

This option can be combined with the Early Warning Device option. As the fresh water is circulated in the pipe, the monitor will signal clean conditions The central control room operator will ask the truck operator to discontinue cleaning

With this option the same water can be used to clean possibly several pipes until it become fully saturated at which time it can be discharged to one of the ponds

The combination of early warning device with the mobile tanker use can result in saving of a considerable amount of water

Installation of a Scraper Device Each pipe can be equipped with a slow moving surface scraper which will continually remove solids formed on the pipe surface A possible problem could be that the scraper blade surface, itself may be subject to the crystal growth But it may not be an insurmountable problem

Increasing Brine Velocity Brine velocity can be increased to scour the deposited crystals, thus effectively washing the pipe, by installing smaller diameter pipes or installing systems for frequent circulation of the water in each pipe at a high velocity This may, however, require more hydrostatic head to counter the additional head loss It may create problems for manual cleaning if it becomes necessary

Again this option can be combined with any other options suggested to improve the combined effect in water conservation.

6.2 3 Pump Packing Flushing Water

For water pumping applications such as those involving saturated brine, salt precipitation in pumps and pipes is inevitable To conserve water for such applications, the primary option available is to change the type or model of pump to one which may need less flushing For example, changing aboveground pumps with negative suction head to submerged pumps with positive discharge head The higher pressure at the discharge end would increase the vapor pressure of brine resulting in higher solubility and lower precipitation at the pump head and packing The APC is currently using high flow low head pumps We do not believe that it can completely be avoided

The other option is to look for ways to maintain packing and other pump parts at 4°C to 6°C elevated temperature to eliminate crystallization

The APC also can explore installing sealless pumps to avoid the packing flushing problem. However, currently available sealless pumps have a maximum pumping capacity of 5,000 gpm (1,136 m^3/hr.)

A cost effective alternative to conserve fresh water for this application is to switch to use of brackish water

6.2 4 Domestic Water Supply

This issue is discussed in detail under section 5 0 Minimizing domestic water use will not only generate less wastewater but will also conserve more than 50 percent of the water currently used by the Township

6 2 5 Power House Makeup Water

Water required for the power plants is used to makeup for water losses occurring within the system. Typically, water losses are due to direct steam losses, condensate loss, and other losses due to system leaks Such losses can be minimized by maintaining a leak proof system, recovering maximum condensate (at least 95 percent), and minimizing steam losses through leaky valves, pressure relief valves, and other leaks through pipes and joints

Another area worth looking into is the RO operation used for water treatment The reject flow from the RO process is about 25 m^3/hr for an inlet flow of 55 m^3/hr (45 percent) This seems relatively high Generally, 20 percent of the inlet flow is rejected, which in this case could be about 11 m^3/hr

We do not have details for the RO process It may be possible that by increasing the number of RO stages, the reject flow can be reduced A savings of 14 m^3/hr constitutes about 1 4 percent of the total flow

6.3 Irrigation

The available information indicates that only a small portion of fresh water (0 3 percent) is used for irrigation In lieu of using fresh water, the sewage treatment plant effluent could be considered for irrigation, if it meets the appropriate standards (Appendix E) for crops to be irrigated

6.4 Other Opportunities

- The APC should also explore the possibility of recycling the sewage treatment plant effluent and utilizing it for the following purposes

  - Cooling tower makeup (15 m^3/hr), and

  - Pipe and pump flushing at the intake pump station (8 m^3/hr)

  Together the above operations require about 23 m^3/hr of fresh water If the sewage treatment plant effluent is further treated by filteration, carbon adsorption, and chlorination, it may be suitable for these applications

  Use of the treated domestic water for irrigation, cooling tower makeup and line flushing will result in conserving about 26 m^3/hr of fresh water (i e , 2 6 percent of the total fresh water intake)

- In-plant domestic water use of 10 m^3/hr also can be reduced by employee awareness, careful use of fresh water, installation of aerated shower heads, modified toilets, etc The sanitation water usage can be reduced by 20 to 30 percent to about 7 m^3/hr

6.5 Use of Brackish Water to Replace Fresh Water

Replacing fresh water with brackish water may not be in a strict technical sense water conservation. It, however, will save millions of cubic meters of fresh water, which can be used for agriculture or other development. The APC staff reported that up to 85 percent of the fresh water supply can be replaced by brackish water The APC should replace fresh process water with brackish water wherever it does not adversely affect the final product quality or quantity In addition, non-process water can be replaced with brackish water in areas of

- Pipe flushing (intake and carnallite areas),
- Pump packing flushing (intake and carnallite areas), and
- Washing and cleaning operations

If 85 percent of the 739 m^3/hr process water, the 90 m^3/hr pipe and pump flushing water, and the 70 m^3/hr of water used for washing and cleaning is replaced with brackish water, the total amount of fresh water available for the other uses would be about 790 m^3/hr

With water conservation and PP/WM measures in place, the current fresh water requirement will be reduced proportionally With the use of brackish water, the remaining fresh water requirement will be further reduced

It is our understanding that APC is striving to obtain brackish water from the Zarqa aquifer The complex geology with steep sloping geological formations and presence of numerous faults in the area, however, makes intercepting the brackish water aquifer difficult
Our preliminary discussions with the Water Authority of Jordan (WAJ) staff indicated that the steep sloping formations extend laterally about 40 to 42 kilometers from the Dead Sea boundaries The closer one moves towards the Dead Sea within this transitional zone, the deeper borings will have to be to intercept desired formations It is, therefore, prudent for the APC to perform exploration for brackish water beyond this transitional zone The areas which are eroded and expose subsurface formations would further aid in reducing the boring depth to intercept the brackish aquifer Cooperative efforts with the WAJ staff in developing a brackish water well field would benefit APC in reducing investment cost

6.6 Use of Run-Off Water

Currently, the facility stores run-off in a pond where it is evaporated The sludge, reddish-brown in color, is contained in the pond

We believe that consideration should be given to utilizing this water for non-process related purposes The fresh run-off water quality should be monitored to ascertain its useful applications If necessary, simple treatment such as coagulation followed by clarification and/or filtration can be implemented to improve the run-off quality for in-plant applications This will contribute to conserving fresh water

The estimated savings in water usages if the above conservation measures are successfully implemented are summarized in Table 3

7 0 CONCLUSIONS AND RECOMMENDATIONS

Water plays a critical role in the potash production as one of the raw materials and as a major component in equipment maintenance, equipment cleaning, washing, steam production, cooling tower operation, domestic water supply, and irrigation Approximately 73 9 percent of the fresh water is used directly for potash processing, while the remaining 26 1 percent is used for non-process related matters

Based on audit findings, the following conclusions can be reached

1 The APC is currently recycling about 140 m^3/hr of water (i e , about 14 percent of the total water intake) In addition, the current brackish water project is supposed to replace approximately 628 m^3/hr of fresh water use when the recovery wells are put in operation and brackish water is supplied The APC can still explore additional water conservation opportunities through good housekeeping, new operating techniques, tighter controls, and improved water management The suggested operational changes and water conservation opportunities are summarized in Table 3

2 Sanitary wastewater and storm water ponds have zero discharge during an average day of operation During heavy storms, these ponds can overflow resulting in contamination of other surface water bodies as well as shallow groundwater and subsurface soil

3 The washwater and other floor drains may constitute a wastewater requiring proper collection, monitoring, and possibly treatment prior to disposal into the environment

4 Intake cleaning and flushing water also constitutes a wastewater discharge

5 There exist several PP/WM opportunities for APC as discussed in Section 5 0 of this report The APC staff should review and evaluate alternatives suggested and implement those which are economically achievable Certain measures of wastewater monitoring should be implemented immediately to allow APC to take appropriate pollution prevention measures and prevent future adverse impacts, if any, on the environment

6 The sewage treatment plant effluent is discharged to an unnamed creek Part of it evaporates and part of it percolates through subsurface soil There exists a great potential for subsurface soil and groundwater contamination

7 The sewage treatment plant sludge is buried underground on APC property The APC property is not a permitted or authorized facility to dispose of the sewage sludge The burying of sludge is not an acceptable practice The APC needs to design a proper sludge containment facility with liners and leachate collection system and proper gas ventilation and flaring As an acceptable alternative,

installation of sludge drying beds and use of dried sludge for fertilization should be considered

8 Due to largely liquid phase operations, there does not seem to be any visible particulate emissions

9 No odor was experienced at the sanitary lagoons or sewage treatment facility indicating that organic emissions may not be a problem

7 1 Recommendations

To achieve the PP/WM and water conservation objective, the following recommendations are made

1 Implement water conservation measures first by installing flow monitoring devices for fresh water used for

- Pipe cleaning,
- Pump packing flushing,
- All operational requirements,
- Reclaimed Water Tank Feed, and
- All fresh water supply outlets not currently monitored

2 Review water usage data to reduce water consumption and optimize process water requirement without affecting product quality

3 Undertake studies to determine feasibility of several water conservation measures proposed Implement those measures which are economically feasible

4 Evaluate and install flow control devices as discussed

5 Continue to implement innovative processes such as cold crystallization to reduce fresh water requirements for process purposes

6 Investigate use of other pumps not requiring flushing water

7 Utilize sewage treatment plant effluent for irrigation, cooling water make-up, and intake pump station flushing, if it meets the desired quality If not, then upgrade the facility as required

8 The WAJ and MWI should continue to assist the APC in its current efforts of extracting brackish water to replace fresh water If necessary, WAJ and MWI should initiate additional exploration Due to complex geology, the presence of faults, and natural erosion taken place over the years, it may be more cost effective to install wells at locations where brackish water aquifer is available within a few hundred meters from the ground surface The APC should continue

to work closely with WAJ and MWI to optimize brackish water extraction and reduce pumping costs

9 The current project of extracting brackish water should be completed as expeditiously as possible The current policy of replacing as much fresh water as possible with brackish water and/or strom runoff water with suitable treatment should continue

10 Divert all facility floor drains and washwater through a single outfall to the sewer so that this outfall can be routinely monitored for flow and sampled to monitor its quality A parshall flume can be installed to monitor the flow

11 Explore and install tailings and brine processing facilities to produce sodium and magnesium compounds, if profitable

12 Construct secondary containment, berms, and dikes as appropriate for storage tanks and operating facilities to contain washwater, leaks, spills, and run-off water This water then can be reused

13 Increase dike heights for storm pond lagoon and sanitary lagoons to prevent washouts during heavy storms

14 The sewage treatment influent and effluent must be monitored for their quality and quantity by installing metering and sampling devices Both flows should be monitored for

- Chemical Oxygen Demand (COD),
- Biological Oxygen Demand (BOD),
- Total Suspended Solids (TSS),
- pH,
- Ammonia Nitrogen (NH_3-N),
- Nitrate Nitrogen (NO_3-N),
- Phosphates,
- Total Dissolved Solids (TDS),
- Chlorides, and
- Flow, m^3/minute

15 Design and construct properly lined containment area with leachate and gas collection systems for sewage treatment plant sludge Alternatively, the sludge can be dried using sludge beds and dried sludge can be used as fertilizer, if it meets appropriate standards for suitable applications

16 Install groundwater monitoring wells at the effluent and sludge disposal locations to monitor underlying aquifers currently used to supply potable water to determine if they are impacted by the sewage treatment plant effluent discharge or leachates from buried sludge Such monitoring should continue as long as

facilities are in operation

17 Finally, we recommend that the following items be considered for feasibility level studies

- Sewage treatment plant effluent treatment and reuse for cooling tower makeup and intake pumping station flushing

- Installation of selective flow monitoring and controlling devices at some critical process water application locations and at selected Township residents to evaluate their impact

- Installation of double walled heated pipe with early warning system and mobile trailer truck system for pipe cleaning

Data developed through the feasibility studies can be used for designing demonstration units for field testing

8 0 FOLLOW-UP ACTIONS

This section contains our recommendations to APC concerning follow-up actions required to meet the PP/WM and water conservation objective The PP/WM is generally given priority over water conservation For APC, however, attempts should be made to achieve both goals concurrently With this philosophy, the following actions are recommended in order of their priority

1 Install flow monitoring and sample collection devices to monitor influent and effluent of the sewage treatment plant

2 Install flow monitoring devices at all key locations to monitor fresh water usage

3 Study, evaluate, and implement options recommended to conserve water

4 Initiate monitoring sewage treatment plant influent and effluent qualities on a monthly basis for the first year and on a quarterly basis thereafter Flows should be recorded daily

5 The APC should complete the current brackish water project and continue its policy of replacing fresh water with brackish water and/or storm water working closely with WAJ and MWI staff

6 Design and implement a floor drain collection system and a single outfall to allow discharge to the sewer The system should have a flow monitoring device A parshall flume would be a good device for monitoring flow and collecting samples

7 Design and construct sludge drying beds for sewage sludge

8 As necessary, increase the height of dikes of storm water storage ponds and sanitary lagoons to prevent solids washouts during heavy storms

9 Concurrent with action No 1 study hydrogeology underlying the sewage treatment facility, effluent discharge site, and sludge disposal site Install two monitoring wells, downstream of the effluent discharge site and the sludge disposal site and one monitoring well upstream to monitor background water quality Each well or cluster of wells, if necessary, should monitor the fresh water aquifers Start monitoring these aquifers on a quarterly basis for the first two years and biannually thereafter

10 If the sewage treatment plant effluent quality does not meet the stringent standards for groundwater recharge, irrigation (based on applications), and possibly drinking water standards, and if the results of action No 9 above shows that it percolates through the fresh water aquifer, then APC must take immediate actions to upgrade the facility as required

11 Develop a PP/WM and water conservation policy as part of the APC management operating philosophy and distribute it to all departments

12 Implement the policy through specific goals and targets

13 Make it each person's responsibility to identify PP/WM and water conservation opportunities

14 Designate a PP/WM and water conservation coordinator to effectively implement this program

15 Publicize success stories and reward employees that identify cost-effective PP/WM opportunities

16 Train employees on aspects of PP/WM and water conservation that relate to their jobs

17 Perform a periodic assessment of PP/WM and water conservation by key management personnel, the coordinator, and independent experts

18 Show management commitment through above actions and reinforce the policy through meetings and company functions

19 Let the company "Mission Statement" include "Better Product through Environmental Protection and Water Conservation"

TABLES

TABLE 1 Percentages of Fresh Water Usage at the APC Facility

Source	Approximate Percentage of Fresh Water Usage
1 Process	73 9
2 Pipes and Pump Packing Flushing in Carnallite Area	9 0
3 Drainage, Washwater, Overflows	7 0
4 Township	3 0
5 Powerhouse Makeup	2 5
6 Cooling Tower Makeup	1 5
7 Potable Water	1 0
8 Sanitation	1 0
9 Pipe and Pump Packing Flushing at the Intake Station	0 8
10 Irrigation	0 3
Total	**100 0**

TABLE 2 Fresh Water Balance, Arab Potash Company[1/]

Water In		Water Out	
Source	**Rate M^3/Hr**	**Source**	**Rate M^3/Hr**
Groundwater Wells	850	Intake and pump packing flushing	8
Surface Water	150	Sanitary Lagoons	10
		Irrigation	3
		Township	30
		Moisture to atmosphere through drying	8
		Drains	70
		Discharge to Flood Channel through C-7	100
		Power Plant Steam Losses	25
		Cooling tower losses	15
		Potable water	10
		Salt pile discharge	65
		Evaporation through carnallite ponds	656
Total	**1,000**		**1,000**

Note

1/ The water balance presented above corresponds to 1 4 million metric tons of potash production per year

Table 3
Summary of Suggested Options Changes and Water Conservation Opportunities

	Item	Current Fresh Water Use m^3/hr	Potential for Conservation m^3/hr (1)	Projected Fresh Water use m^3/hr	Suggested Measures
1	Washwater, Drains	70	63	7	1 Good housekeeping 2 Tighter controls 3 Use brackish water 4 Recycle and reuse 5 Use of water saver equipment
2	Pump Packing Flushing	60	60	0	1 Use of brackish water
3	Township	30	15	15	1 Better management 2 New techniques 3 Tighter controls
4	Pipe Cleaning	30	24	6	1 New techniques 2 Better management
5	Power House Makeup	25	14	11	1 Process modification 2 Better preventative maintenance
6	Irrigation	3	2	1	1 Reuse of treated domestic waste-water
7	Process	739	628 (0)[2]	111	1 Use of brackish water
8	Potable Water	10	0	10	None
9	Sanitary	10	3	7	1 Use of water saver equipment 2 Public awareness 3 Tighter control
10	Intake Cleaning	8	8	0	1 Use recycled treated domestic wastewater
11	Cooling Tower Makeup	15	7	8	1 Use recycled treated domestic wastewater
		1,000	824 (196)[2]	176	

Note (1) The figures are based on engineering judgement if suggested measures can be implemented successfully The APC can

achieve this goal if suggested measures are proven technically and economically feasible

(2) The APC is currently investing $20 million to install additional wells to recover brackish water The figures in parentheses () represent the fresh water usage upon completion of the current project, for supplying brackish water

FIGURES

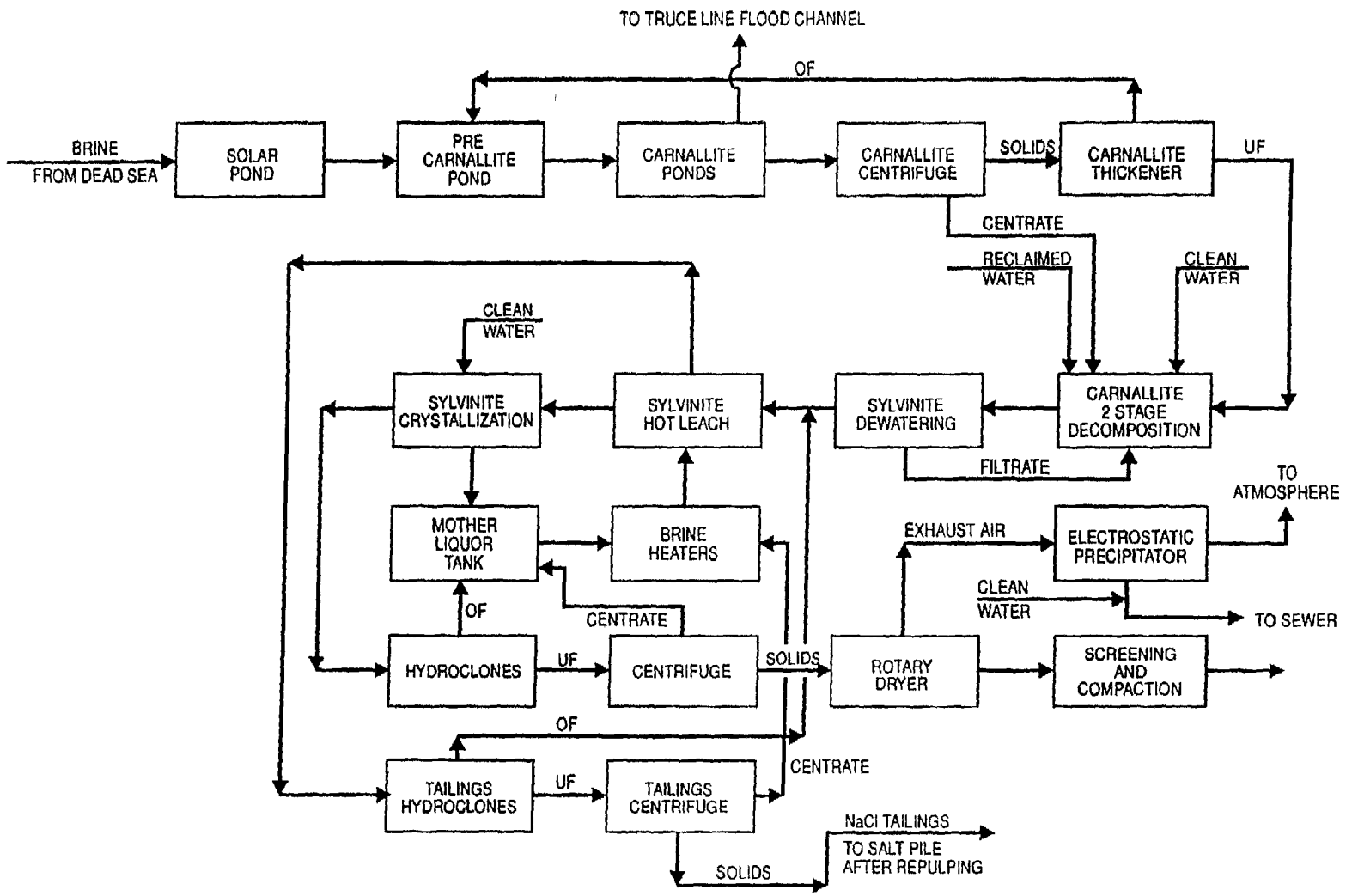

Figure 1
POTASH MANUFACTURING PROCESS BLOCK FLOW DIAGRAM
ARAB POTASH INDUSTRY, LTD

HARZA *Consulting Engineers and Scientists*

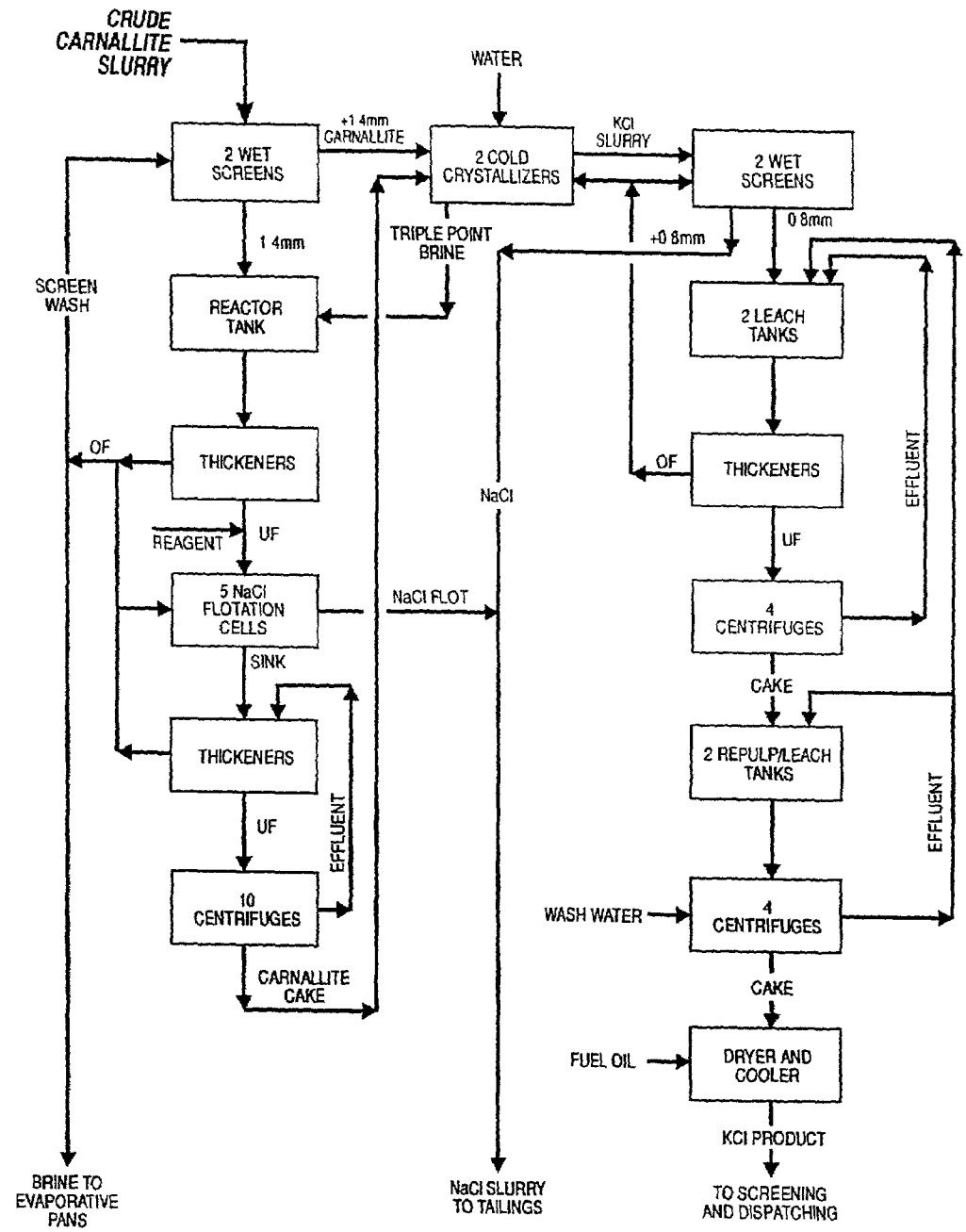

Figure 2
COLD CRYSTALLIZATION PROCESS BLOCK FLOW DIAGRAM
ARAB POTASH INDUSTRY LTD
Amman, Jordan

HARZA Consulting Engineers and Scientists

\proposal\jordan\apc2 cdr

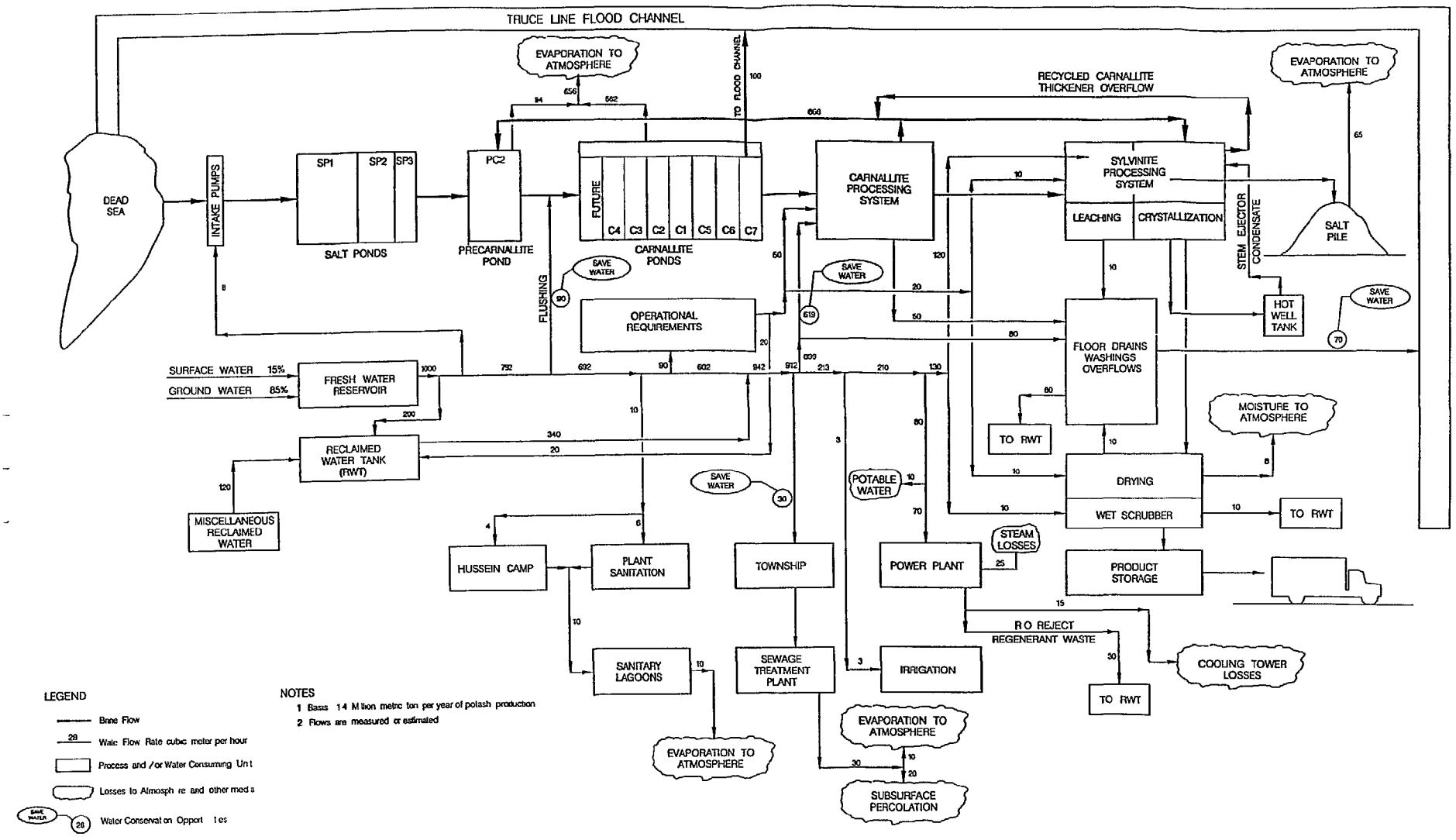

Figure 3
FRESH WATER FLOW BALANCE
ARAB POTASH COMPANY
Amman Jordan

HARZA Consulting Engineers and Scientists

BEST AVAILABLE COPY

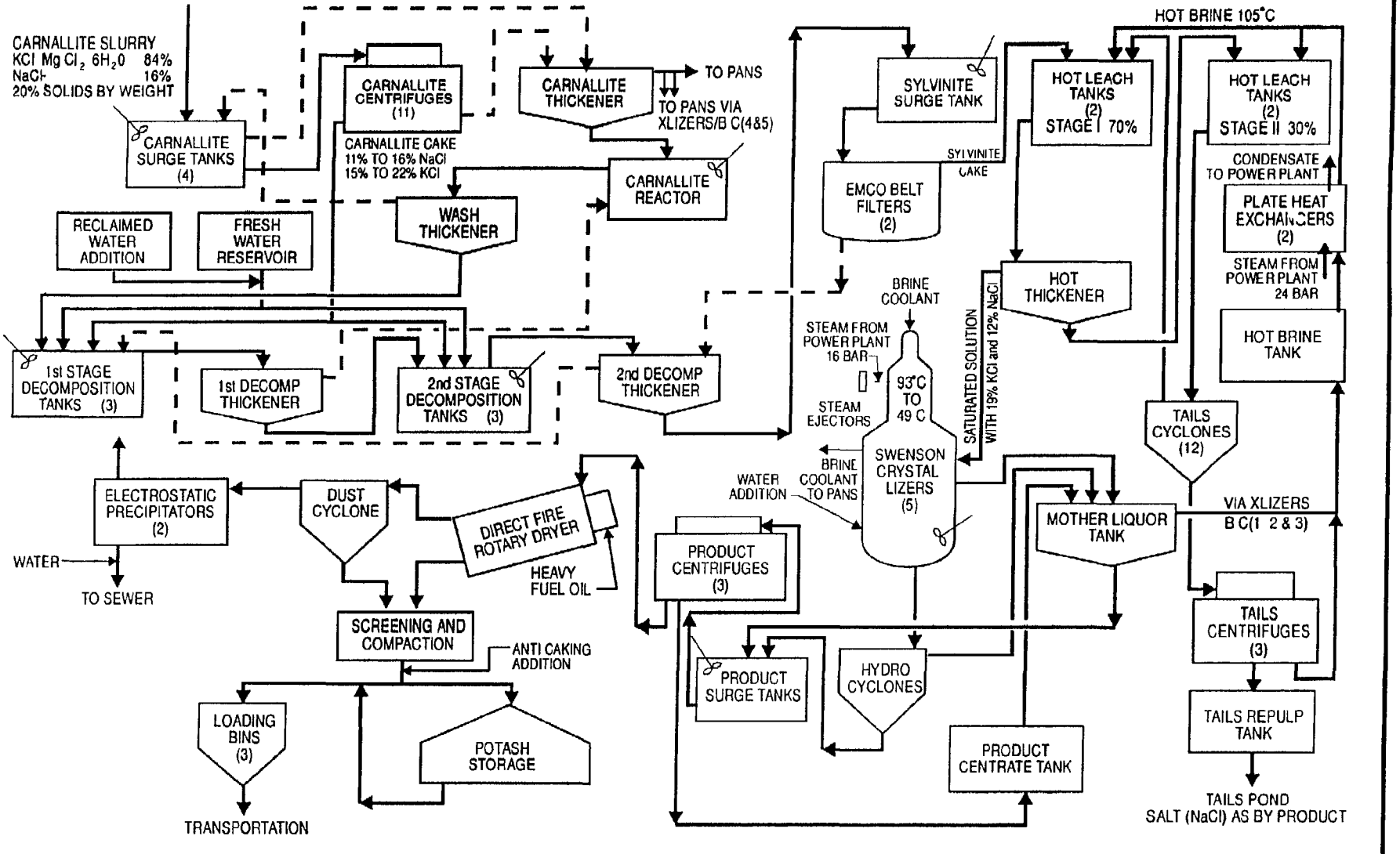

Figure 4

POTASH REFINERY SCHEMATIC PROCESS FLOW DIAGRAM

ARAB POTASH INDUSTRY, LTD
Amman Jordan

HARZA *Consulting Engineers and Scientists*

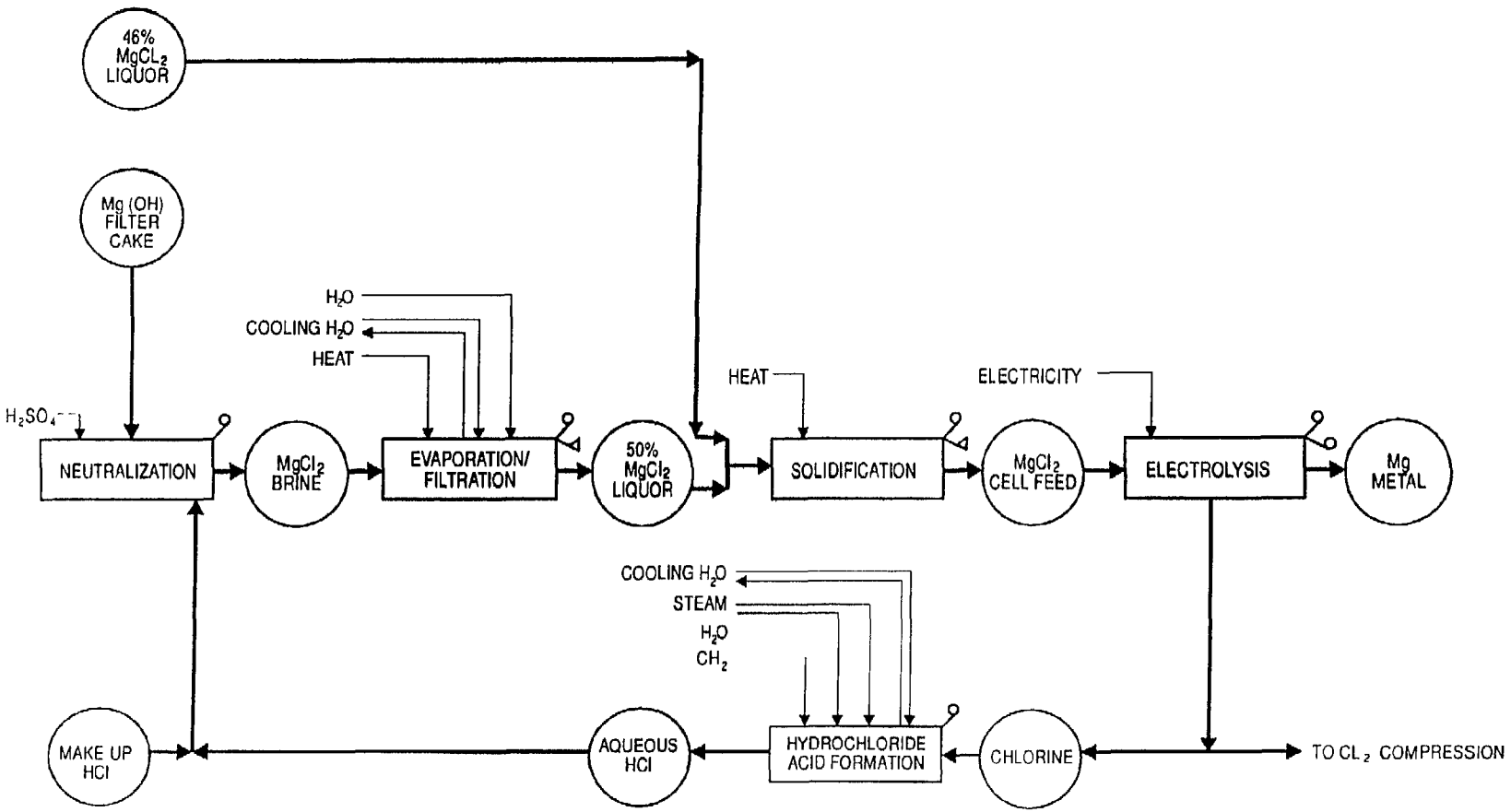

Figure 5

SCHEMATIC PROCESS FLOW DIAGRAM FOR PRODUCTION OF MAGNESIUM AND CHLORINE VIA $MgCl_2$ ELECTROLYSIS

ARAB POTASH INDUSTRY LTD
Amman Jordan

HARZA *Consulting Engineers and Scientists*

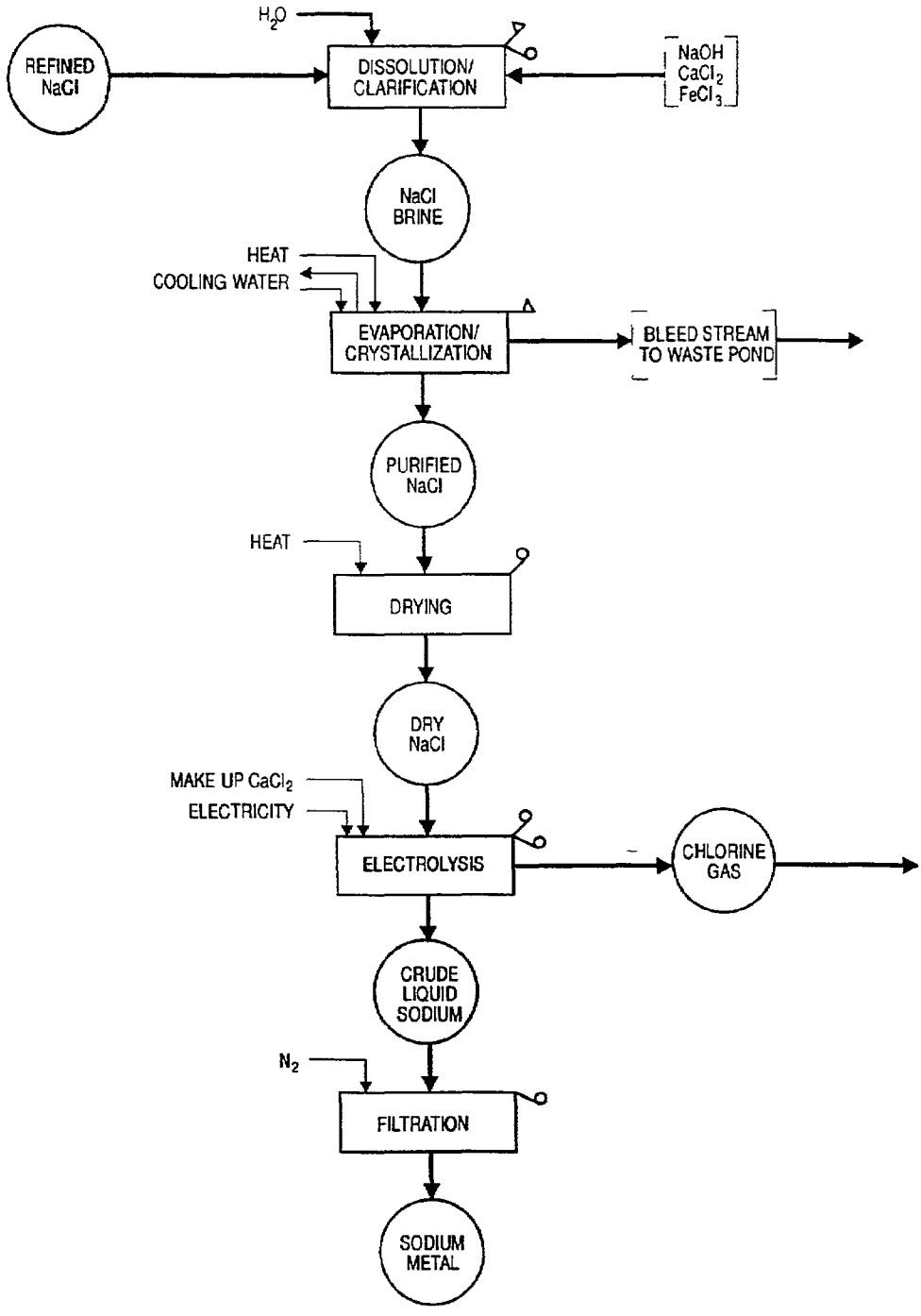

Figure 6

SCHEMATIC PROCESS FLOW DIAGRAM FOR PRODUCTION OF SODIUM METAL VIA NaCl ELECTROLYSIS

ARAB POTASH INDUSTRY LTD
Amman Jordan

HARZA *Consulting Engineers and Scientists*

\proposal\nuaaa\ccdd

67

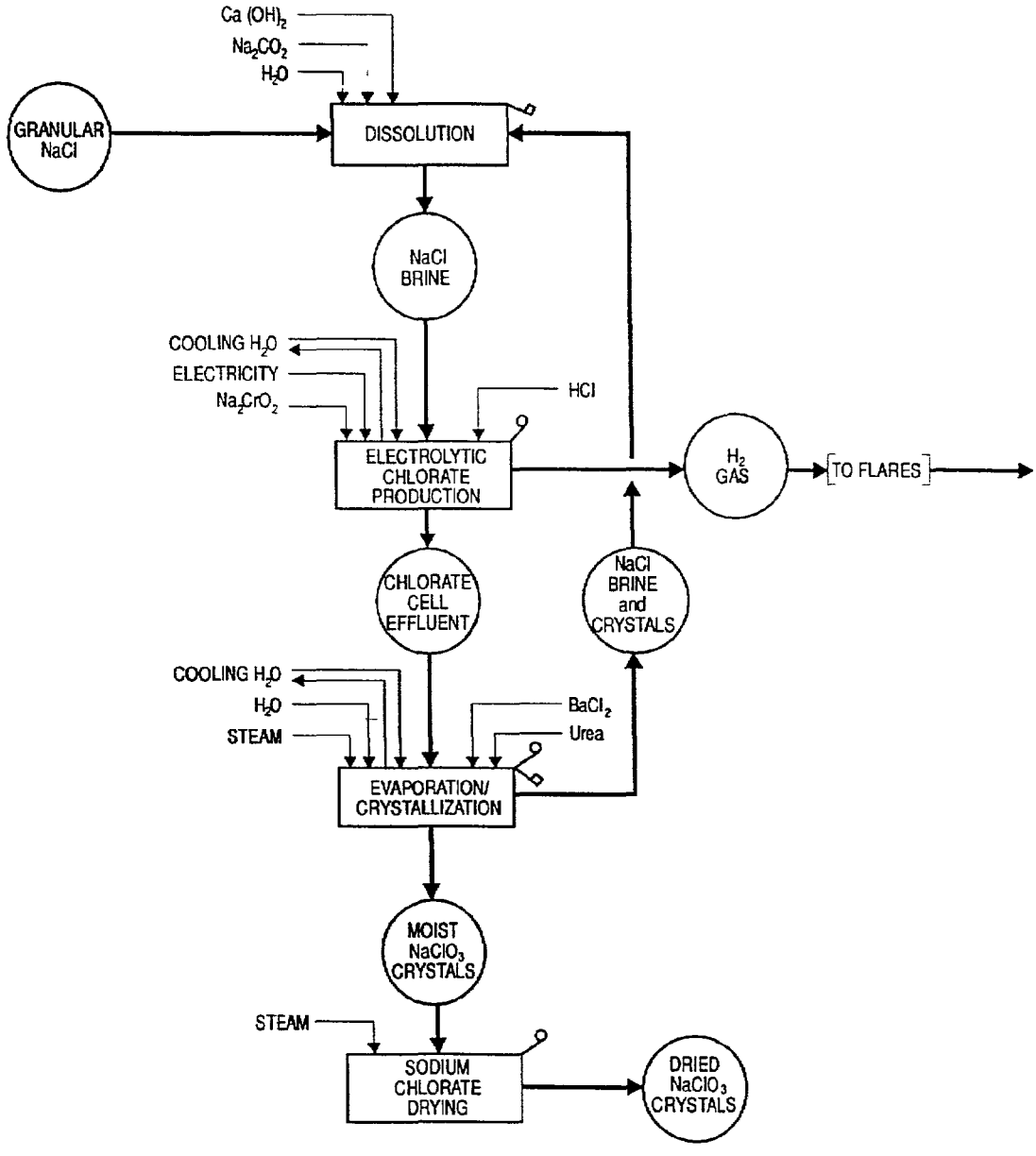

Figure 7

SCHEMATIC PROCESS FLOW DIAGRAM FOR PRODUCTION OF SODIUM CHLORATE VIA NaCl ELECTROLYSIS

ARAB POTASH INDUSTRY LTD
Amman Jordan

HARZA *Consulting Engineers and Scientists*

\proposal\jordan\apc7.cdr

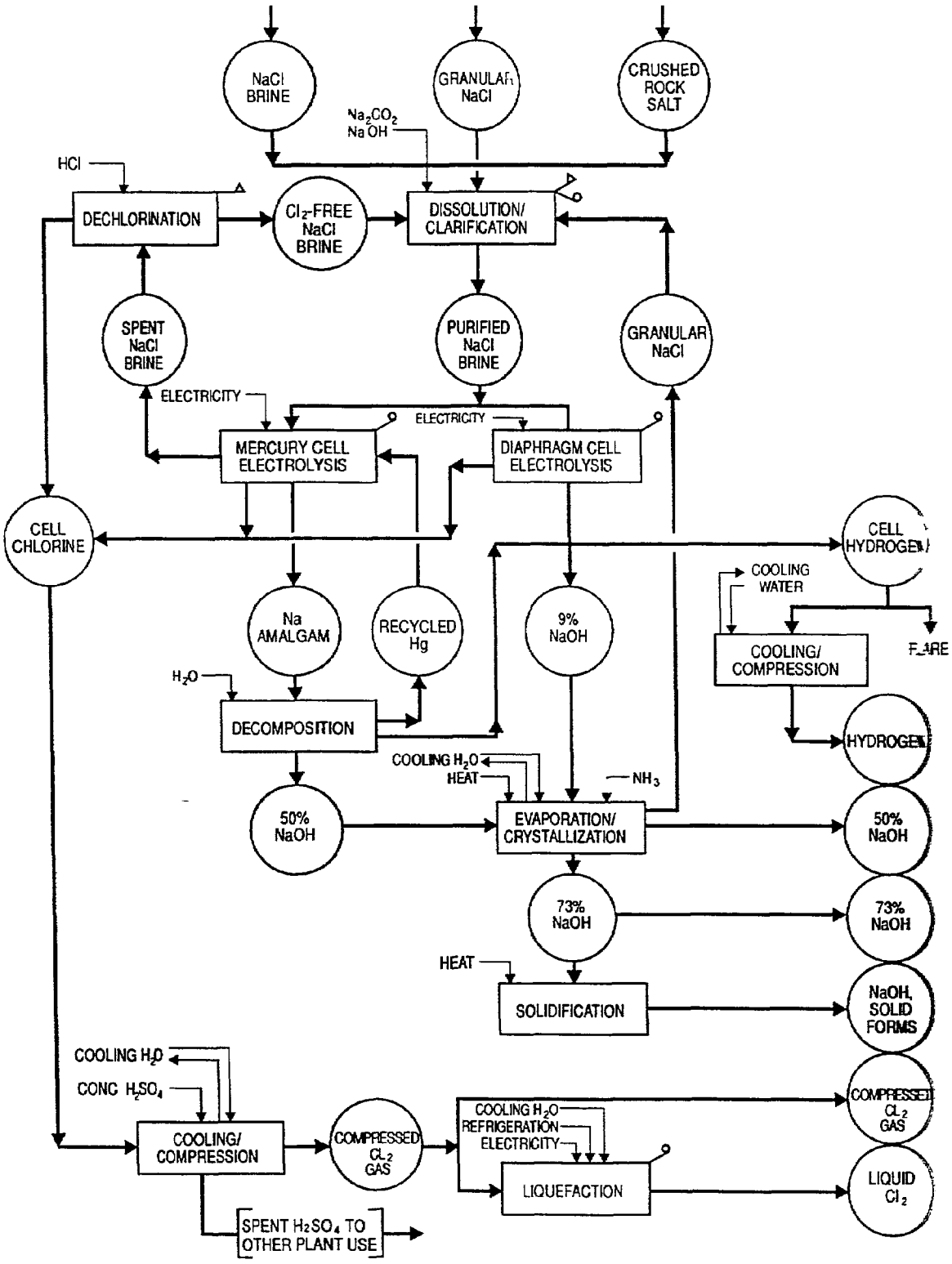

Figure 8

SCHEMATIC PROCESS FLOW DIAGRAM FOR PRODUCTION OF CAUSTIC SODA AND CHLORINE VIA NaCl ELECTROLYSIS

ARAB POTASH INDUSTRY LTD
Amman Jordan

HARZA *Consulting Engineers and Scientists*

\proposal\jordan\fpc8.cdr

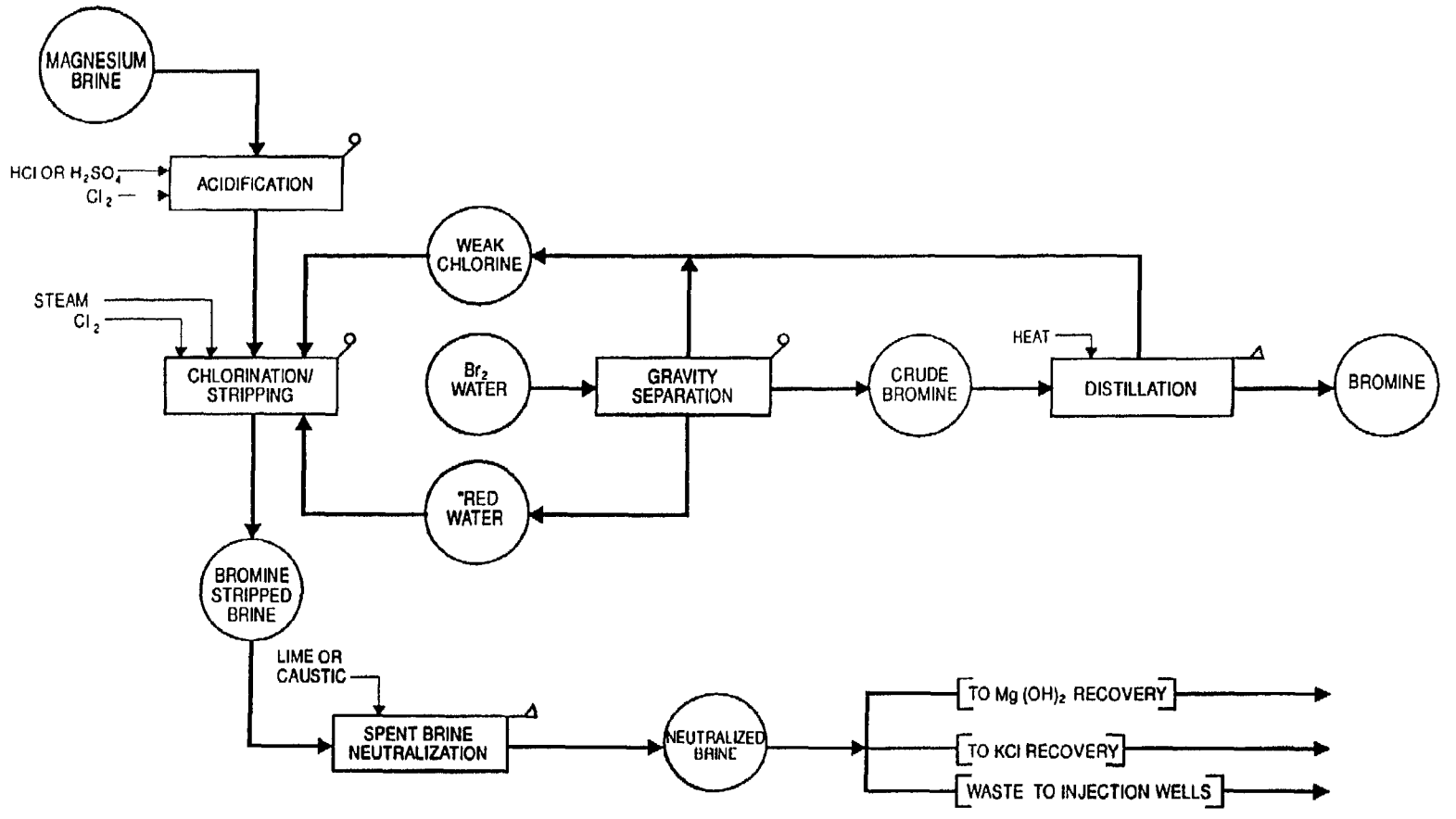

Figure 9

SCHEMATIC PROCESS FLOW DIAGRAM FOR PRODUCTION OF BROMINE FROM MAGNESIUM BRINES

ARAB POTASH INDUSTRY LTD
Amman Jordan

HARZA *Consulting Engineers and Scientists*

APPENDICES

APPENDIX A

AUDIT QUESTIONNAIRE

BEST AVAILABLE COPY

WQICP WASTE MINIMIZATION AUDIT

Facility Name ARAB POTSH COMPANY Auditor/Firm HARZA and RSS

Date 8/13,14/1994

ATTACHMENT A

AUDIT QUESTIONAIRE

SITE DESCRIPTION

Facility Name ARAB POTASH COMPANY (APC)

Area: 420000 m^2

Address Ghor AL-Safi, Jordan

Telephone 962-6-66516, 687297, 962-3-377121

Major Products POTASH as KCl

Production Rate 1.4 mt/y

SIC Codes* 1474

Major Sources of Wastewater Discharges

1 Sanitary and Domestic uses

2 Storm Sewers

3 Flushing of Intake Pumps Packings

Major Processes

1. Carnallite Process
2. Sylvinite Process
3. Crystillization Process
4. Drying Process
5. Screening Process

Facility/Equipment Age Twelve Years

* USA Classification

WQICP WASTE MINIMIZATION AUDIT

Facility Name APC

Auditor/Firm HARZA and RSS

Date 8/13,14/1994

PROCESS INFORMATION

Operation Type ✓ Continuous -- Discrete
-- Batch or Semi-Batch -- Other_____

Document	Complete? (Y/N)	Current? (Y/N)	Document Number
Process Flow Diagram	Y	Y	
Material/Energy Balance	N	N	
Design	N	N	
Operating			
Flow/Amount Measurements	N	N	
Stream			
Analyses/Assays			
Stream			
Storm Sewer effluent analyses	Y	Y	
Plant Layout/Flow Diagrams	Y	Y	
Process Description	Y	Y	
Operating Manuals	Y*	—	
Equipment List/Age	Y*	—	
Equipment Specifications	Y*	—	
Piping & Instrument Diagrams	Y*	—	
Plot and Elevation Plan(s)	Y*	—	
Environmental Audit Report	N	N	
Permit/Permit applications	NA	NA	
Raw Material Inventory Records	Y*	Y*	
Product Inventory Records	Y*	Y*	
Management method practiced for each wastewater stream	N	N	
Wastewater treatment facilities	Y	Y	
Waste management practice	N	N	
Ancillary facilities	Y*	Y*	
Annual cost for management of the wastewater discharge	N	N	
Photographic records	N	N	
—			

* The Company has it, but was not supplied to us

NA not applicable

— . not known

WQICP WASTE MINIMIZATION AUDIT

Facility Name APC Auditor/Firm HARZA and RSS

Date 8/8,14/1994

INPUT MATERIALS* SUMMARY

Material	DESCRIPTION[1]		
	Stream No	Stream No	Stream No
Name Anti Caking Agent	Not applicable		
Source/Supplier CeCa, Fresh AKZO, Holland			
Component of Concern			
Annual Consumption Rate 350 t/y			
Overall			
Component(s) of Concern			
Purchase Price, $ per Not Known			
Overall Annual Cost Not Known			
Delivery Mode[2] **			
Shipping Container Size & Type[3]			
Storage Mode[4] In Open Air			
Transfer Mode[5]			
Empty Container Disposal/Management			
Shelf Life Not Known			
Supplier Would			
- accept expired material (Y/N)			
- accept shipping containers (Y/N)			
Acceptable Substitute(s), if any			
Alternate Supplier(s)			
Product Inventory Records			

1. Stream number, if applicable, should correspond to those used on process flow diagram
2. e g , pipeline, tank truck etc
3. e g , drum, paper bag, tank, etc
4. e g , outdoor, warehouse, underground, aboveground, etc
5. e g , pump, forklift, conveyor, etc
6. e g , crush and dump, clean and recycle return to supplier etc

* Based on information provided by Company personell, the only input material purchased by APC which directly related to Potash Production is an anticaking agent This is usually added to final product going to store.

** Liquid sprayed, Solid through screw feeder

WQICP WASTE MINIMIZATION AUDIT

Facility Name APC Auditor/Firm HARZA and RSS

Date 8/13,14/1994

INDIVIDUAL WASTE STREAM CHARACTERIZATION

(page 1 of 4)

1 Waste Stream Name/ID Storm Sewer Effluent Stream No _____

2 Waste Characterization (attach additional sheets with composition data, as necessary)

--- Gas --- [Liquid] --- Solid --- Mixed phase

Density kg/M³ ≈13 (variable) High Heating Value Cal/kg Not Known

pH _____ Flash Point _____ % Water 50%

3 Waste Leaves Process as

-- air emission -- [wastewater] -- solid waste

4 Occurrence

✓ continuous

-- discrete

discharge triggered by -- chemical analysis _____

-- other (describe) _____

Type -- periodic _____ length of period _____

-- sporadic

5 Generation Rate

Annual _____ kg per year

Maximum 70 m³/hr _____ ~~kg per~~ _____

Average _____ kg per _____

Frequency _____ batches per _____

Batch Size _____ average _____ range

WQICP WASTE MINIMIZATION AUDIT

Facility Name APC Auditor/Firm HARZA and RSS

Date 8/13, 14/1994

INDIVIDUAL WASTE STREAM CHARACTERIZATION

(page 2 of 4)

6 Waste Origins/Sources

Fill out this worksheet to identify the origin of the waste If the waste is a mixture of waste streams, fill out a sheet for each of the individual waste streams

Is the waste mixed with other wastes? -✓- Yes ---- No

Describe how the waste is generated

1 O/F from thickeners (spills)

2. Flushing of pump packings

3. Leaks and washwater

Example Formation and removal of an undesirable compound removal of an unconverted input material depletion of a key component, equipment cleaning waste, obsolete input material, spoiled batch and production run spill or leak cleanup evaporative loss venting losses etc

WQICP WASTE MINIMIZATION AUDIT

Facility Name APC Auditor/Firm HARZA and RSS

Date 8/13,14/1994

INDIVIDUAL WASTE STREAM CHARACTERIZATION

(page 3 of 4)

Waste Stream Storm Sewer Effluent

7 Management Method

Leaves site in --- bulk
--- 55 gal drum
--- other (describe) Disposed into the Truce Line Flood Channel

Disposal Frequency Continous

Applicable Standards/Regs None

Managed -X- onsite --- offsite
-X- other (describe)

Recycling -X- direct use/re-use
-X- energy recovery
-X- redistilled
-X- other (describe)

reclaimed material returned to site?

--- Yes --- (No) --- used by others

residue yield
residue disposal

Treatment -X- biological
-X- oxidation/reduction
-X- pH adjustment
-X- precipitation
-X- other (describe)

Final Disposition -✓- Dump into the Truce Line Flood Channel
--- pond
--- other (describe)

X not applicable

INDIVIDUAL WASTE STREAM CHARACTERIZATION

(page 4 of 4)

WQICP WASTE MINIMIZATION AUDIT

Facility Name APC Auditor/Firm HARZA and RSS

Date 8/13, 14/1994

*cost as of RO treatment (quarter and year)

Cost Element	Unit Price JD per ___	Reference/Source
Onsite Storage & Handling	/	
Pretreatment (R.O + IE)	1 JD/m³	APC Engineers
Container	/	
Transportation Fee	Not Known	
Disposal Fee	Not Known	
Taxes	/	
Total disposal Cost	/	

/ - not known

* The company personnel informed us that 1 ton of Potash produced costs 68 dollars. However, the cost of treating this waste stream (storm sewer) is nothing. This waste stream is disposed into the flood channel without any treatment

WQICP WASTE MINIMIZATION AUDIT

Facility Name APC Auditor/Firm HARZA and RSS

Date 8/13,14/1994

WASTE STREAM INFORMATION

(one form for each stream)

Stream ID /

1 Streamname Storm Sewer Effluent
(wastewater, waste oil, still bottoms etc)

2 Discharge Identification Surge tanks, Thickeners, Pumps
(Enter process or equipment from which stream is discharged)

3 Stream flow/quality

minimum flow _____ L/min
maximum flow _____ L/min
average flow 1166 7 L/min

4 Is stream continuous orintermittent? Continuous

5 Which of following is the cause of the waste?

a Process chemistry = (Reaction stoichiometry kinetic yield)
Describe _____

b Engineering Design (capacity pressure, temperature limitations etc) Describe *The Capacity of tanks is not Sufficient
*Pumps used require alot of flushing

c Operations = (operating rates, order of addition, etc) Describe
Occurence of plugs

d Maintenance = (leaks, spills, corrosion etc)
Describe _____

6 Are the components of the waste stream a raw material (RM) product (P) useful byproduct (UPB) nonuseful byproduct (NBP) solvent (S) catalyst (C), or an impurity (I) in the raw material?

(Attach analysis records if possible)

Fill out attached Figure 1 for each waste stream

WQICP WASTE MINIMIZATION AUDIT

Facility Name APC Auditor/Firm HARZA and RSS

Date 8/13,14/1994

Component Name	Conc (mg/L)	Check One RM	P	UBP	NBP	S	C	I
KCl			35%					
$MgCl_2$				10%				
$CaCl_2$					1%			

7 Waste stream characteristics -- pH ____ TSS ____ TDS ____
Color ____ Hardness ____ Odor ____ TOC ____ Other, ____

8 Current disposition of the stream Discharged into the Truce Line Flood Channel

9 Current effluent criteria and disposal limitation Jordan Standard 202

10 Permits relevant to the waste stream disposition None

11 Current cost of disposal and/or treatment for this waste stream None

12 If stream is currently being treated, list NU

a Current treatment parameters (chemical consumption treatment conditions etc) ____

b. Existing treatment equipment (identify size and type of equipment) ____

WQICP WASTE MINIMIZATION AUDIT

Facility Name APC

Auditor/Firm HARZA and RSS

Date 8/13,14/1994

Other pertinent information None

WQICP WASTE MINIMIZATION AUDIT

Facility Name APC Auditor/Firm HARZA and RSS

Date 8/13,14/1994

INDIVIDUAL WASTE STREAM CHARACTERIZATION

(page 1 of 4)

1 Waste Stream Name/ID Flushing of Intake Pumps Packings Stream No _____

2 Waste Characterization (attach additional sheets with composition data as necessary)

--- Gas --- [Liquid] --- Solid --- Mixed phase

Density kg/m³ _____ High Heating Value Cal/kg_____

pH _____ Flash Point _____ % Water_____

3 Waste Leave Process as

-- air emission -- [wastewater] -- solid waste

4 Occurrence

-- [continuous]

-- discrete

discharge triggered by -- chemical analysis_____

-- other (describe)_____

Type -- periodic_____length of period_____

-- sporadic

5 Generation Rate

Annual _____ kg per year

Maximum _____ kg per _____

Average 8 m³/hr _____ ~~kg~~ per _____

Frequency _____ batches per _____

Batch Size_____ average _____ range

WQICP WASTE MINIMIZATION AUDIT

Facility Name APC Auditor/Firm HARZA and RSS

Date 8/13, 14/1994

INDIVIDUAL WASTE STREAM CHARACTERIZATION

(page 2 of 1)

6 Waste Origins/Sources

Fill out this worksheet to identify the origin of the waste If the waste is a mixture of waste streams, fill out a sheet for each of the individual waste streams

Is the waste mixed with other wastes? ---- Yes --✓ No

Describe how the waste is generated

This results from fresh water used to flush the intake pumps

Example Formation and removal of an undesirable compound removal of an unconverted input material depletion of a component equipment cleaning waste obsolete input material spoiled batch and production run spill or leak cleanup evaporative losses venting losses etc

WQICP WASTE MINIMIZATION AUDIT

Facility Name APC Auditor/Firm HARZA and RSS

Date 8/13, 14/1994

INDIVIDUAL WASTE STREAM CHARACTERIZATION

(page 3 of 1)

Waste Stream Flushing of Intake Pumps Effluent

Management Method

Leaves site in --- bulk ____

--- 55 gal drum ____

--- other (describe) Disposed in the Dead Sea

Disposal Frequency Continuous

Applicable Standards/Regs None

Managed -X- onsite -- offsite

X other (describe) ____

Recycling X direct use/reuse ____

-X- energy recovery ____

-X- redistilled ____

-X- other (describe) ____

reclaimed material returned to site?

--- Yes --- (No) --- used by others

residue yield ____

residue disposal ____

Treatment -X- biological ____

--X- oxidation/reduction ____

-X- pH adjustment ____

-X- precipitation ____

-X- other (describe) ____

Final Disposition --- Dump in the Dead Sea

--- pond ____

--- other (describe) ____

X not applicable

INDIVIDUAL WASTE STREAM CHARACTERIZATION

(page 1 of 1)

85

WQICP WASTE MINIMIZATION AUDIT

Facility Name APC Auditor/Firm HARZA and RSS

Date 8/13,14/1994

*Costs as of ___/___ (quarter and year)

Cost Element	Unit Price JD per	Reference/Source
Waste Storage & Handling		
Pretreatment		
Container		
Transportation Fee		
[illegible]		
[illegible]		
Total disposal Cost		

* Not applicable

WQICP WASTE MINIMIZATION AUDIT

Facility Name APC Auditor/Firm HARZA and RSS

Date 8/13/14 /1994

WASTE STREAM INFORMATION

(one form for each stream)

Stream ID _____

1 Streamname Flushing of Intake Pumps Packings Effluent

(wastewater, waste oil still bottoms, etc)

2 Discharge Identification Disposed into the Dead Sea

(Enter process or equipment from which stream is discharged)

3 Stream flow/quantity

minimum flow _____ L/min

maximum flow _____ L/min

average flow 133.3 L/min

4 Is stream continuous or intermittent? Continuous

5 Which of following is the cause of the waste?

a Process chemistry = (Reaction stoichiometry kinetic yield)

Describe

[b] Engineering Design (capacity pressure temperature limitation etc) Describe Water is added to Optimize Pressure

c Operations = (operating rates order of addition etc) Describe

d Maintenance = (leaks spills corrosion etc)

Describe

6 Is the components of the waste stream a raw material (RM) product (P) useful byproduct (UPB) nonuseful byproduct (NBP) solvent (S) catalyst (C) or an impurity (I) in the raw material?

(Attach analysis records if possible)

Fill out attached Figure 1 for each waste stream

BEST AVAILABLE COPY

87

WQICP WASTE MINIMIZATION AUDIT

Facility Name APC Auditor/Firm HARZA and RSS

Date 8/13,14/1994

Component Name	Conc (mg/L)	Check One RM	P	UBP	NBP	S	C	I
Same composition as Dead Sea Brine, but far less diluted	None							

7 Waste stream characteristics -- pH ____ TSS ____ TDS ____ TOC ____ Hardness ____ Odor ____ TOC ____ Other ____

8 Current disposition of the stream Into the Dead Sea

9 Current effluent criteria and disposal limitation Jordanian standard 202

10 Permits relevant to the waste stream disposition None

11 Current cost of disposal and/or treatment for this waste stream None

12 If stream is currently being treated list NO

a Current treatment parameters (chemical consumption treatment conditions etc) ____

b Existing treatment equipment (identify size and type of equipment) ____

BEST AVAILABLE COPY

WQICP WASTE MINIMIZATION AUDIT

Facility Name: APC

Auditor/Firm: HARZA and RSS

Date: 8/13, 14 1994

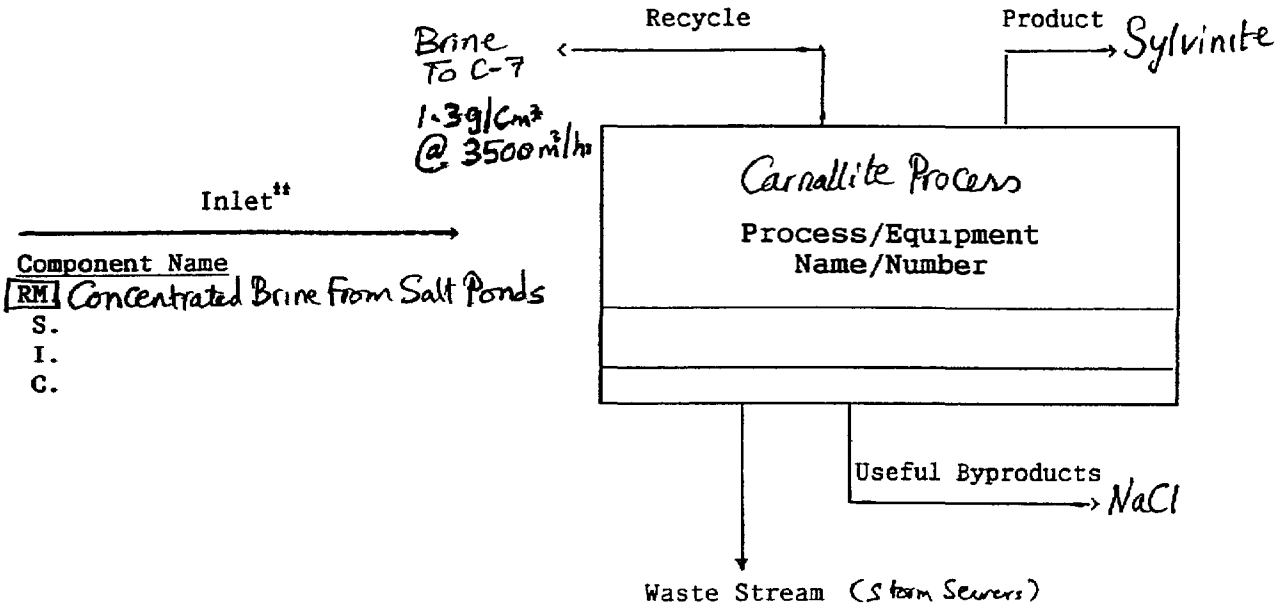

Component Name

[RM] Concentrated Brine from Salt Ponds

S.

I.

C.

	Name	(mg/L)
RM		
C		
S		
I		
UBP	$MgCl_2$	10%
NBP	$CaCl_2$	1%
[P]	KCl	35%

where.

C = Catalyst

I = Impurity in the raw material

NBP = Non-useful by product

P = Product

RM = Raw material

S = Solvent

UBP= Useful byproduct

** If UBP, P, or NBP appears in the inlet/feed to a unit operation, then it was formed in the previous piece of equipment Trace it back to the unit in which it was formed

Figure 1

BEST AVAILABLE COPY

89

WQICP WASTE MINIMIZATION AUDIT

Facility Name APC Auditor/Firm HARZA and RSS

Date 8/13, 14/1994

WASTE STREAM SUMMARY

Component of Concerns		Stream No[1]		Stream No		Stream No	
Waste ID/Name		Storm Sewers		Domestic		Flushing of Intake Pumps	
Source/Origin		Spills, washouts		human activity		Flushing	
Annual Generation Rate (units_____)		70 m³/hr		30 m³/hr		8 m³/hr	
Overall							
Component(s) of Concern							
Cost of Disposal		✓		✓		✓	
Unit Cost (JD per _____)							
Overall (per Year)							
Method of Management[2]		Disposed in the flood channel		Biolog treated and disposed to a creek		Disposed into the Dead Sea	
Priority Rating Criteria[3]*	W*	Rating (R)	R*W	Rating (R)	R*W	Rating (R)	R*W
Regulatory Compliance		NA		NA		NA	
Treatment/Disposal Cost		NA		NA		NA	
Waste Quantity Generated		70 m³/hr		30 m³/hr		8 m³/hr	
Waste Hazard		No		potentially		No	
Safety Hazard		No		potentially		No	
Minimization Potential		yes		yes		yes	
Potential Byproduct Recovery		yes		No		No	
Sum of Priority Ranking Scores							
Priority Rank							

1 Stream number, if applicable, should correspond to those used on process flow diagrams
2 For example, sanitary dump, onsite recycle, dewatering etc
3 Rate each stream (W) in each category on a scale from 0 to 10

OPTION DEVELOPMENT

Page 1 of 2

Meeting Format (e g , brainstorming, nominal group technique) _____

Meeting Coordinator _____

* Further investigation needed

BEST AVAILABLE COPY

WQICP WASTE MINIMIZATION AUDIT

Facility Name APC Auditor/Firm HARZA and RSS

Date 8/13, 14 | 1994

Meeting Participants APC Messers, Samir Rahim, Ra'ed Soub, William Stanley, Mazen Younus, Ismail Daqour, and Hani Quarras

Audit Team Mr Hamid Abu Obed, Ms Rania Abdul Khaleq, Dr Shawn Niaki, Dr Riyad Musa, Mr Rafat Assi, and Mr Krishna Mayenkar

List Suggested Options	Rationale/Remark on Option
These options are clearly defined in Chapters 6, 7, and 8 of this audit report	

WQICP WASTE MINIMIZATION AUDIT

Facility Name APC Auditor/Firm HARZA and RSS

Date 8/13, 14/1994

OPTION DEVELOPMENT *

Option Name _____

Briefly describe the option _____

Waste Stream(s) Affected, _____

Input Material(s) Affected _____

Product(s) Affected _____

Indicate Type,--- Source Reduction
--- Equipment-Related Change
--- Personal/Procedure-Related Change
--- Material-Related Change

--- Recycling/Reuse
--- Onsite --- Material reused for original Purpose
--- Offsite --- Material used for lower-quality Purp
--- Material sold
--- Material burned for heat recovery

* Suggested options are discussed in the audit report (Ch 6,7,8)

WQICP WASTE MINIMIZATION AUDIT

Facility Name APC Auditor/Firm HARZA and RSS

Date 8/13,14/1994

Other pertinent information None

BEST AVAILABLE COPY

WQICP WASTE MINIMIZATION AUDIT

Facility Name APC Auditor/Firm HARZA and RSS

Date 8/13, 14/1994

INDIVIDUAL WASTE STREAM CHARACTERIZATION

(page 1 of 4)

1 Waste Stream Name/ID Sanitary and Domestic Effluent Stream No _____

2 Waste Characterization (attach additional sheets with composition data as necessary)

-- Gas --- [Liquid] -- Solid --- Mixed phase

Density kg/m³ — High Heating Value Cal/kg —

pH _____ Flash Point _____ % Water _____

3 Waste Generated Process as

-- air emission -- [wastewater] -- solid waste

4 Occurrence

✓ -- continuous

-- discrete

discharge triggered by -- chemical analysis _____

-- other (describe) _____

Type -- periodic _____ length of period _____

-- sporadic

5 Generation Rate

Annual _____ kg per year

Maximum _____ kg per _____

Average 30 m³/hr _____ ~~kg per~~ _____

Frequency _____ batches per _____

Batch Size _____ average _____ range

BEST AVAILABLE COPY

WQICP WASTE MINIMIZATION AUDIT

Facility Name APC Auditor/Firm HARZA and RSS

Date 8/13,14/1994

INDIVIDUAL WASTE STREAM CHARACTERIZATION

(page 2 of 4)

6 Waste Origins/Sources

Fill out this worksheet to identify the origin of the waste If the waste is a mixture of waste streams fill out a sheet for each of the individual waste streams

Is the waste mixed with other wastes? ---- Yes ---- [No]

Describe how the waste is generated

This generated from reguler domestic uses

Example Formation and removal of an undesirable compound removal of an unconverted input material depletion of a key component equipment cleaning waste obsolete input material spoiled batch and production run spill or leak cleanup evaporative losses venting losses etc

95

WQICP WASTE MINIMIZATION AUDIT

Facility Name APC Auditor/Firm HARZA and RSS

Date 8/13, 14 / 1994

INDIVIDUAL WASTE STREAM CHARACTERIZATION

(page 3 of 4)

Waste Stream Sanitary and Domestic Uses Effluent

Management Method

Leaves site in --- bulk _____

-- 55 gal drum _____

--- other (describe) Disposed to Treatment Facility

Disposal Frequency Continuous

Applicable Standards/Regs None

Damaged ✓ onsite - off site

-- other (describe) _____

Recycling ✗ direct use/reuse _____

✗ energy recovery _____

✗ redistilled _____

✗ other (describe) _____

reclaimed material returned to site?

--- Yes --- [No] --- used by others

residue yield _____

residue disposal _____

Treatment ✓ biological _____

-- oxidation/reduction _____

-- pH adjustment _____

--- precipitation _____

-- other (describe) _____

Final Disposition --- Dump into an unnamed creek (wash)

--- pond _____

--- other (describe) _____

INDIVIDUAL WASTE STREAM CHARACTERIZATION

(page 4 of 4)

WQICP WASTE MINIMIZATION AUDIT

Facility Name APC Auditor/Firm HARZA and RSS

Date 8/13,14/1994

Costs as of ___/_____ (quarter and year)

Cost Element *	Unit Price JD per ____	Reference/Source
On site Storage & Handling		
Pre treatment		
Container		
Transportation Fee		
Disposal Fee		
Taxes		
Total disposal Cost		

*Not applicable

WQICP WASTE MINIMIZATION AUDIT

Facility Name APC Auditor/Firm HARZA and RSS

Date 8/13, 14/1994

WASTE STREAM INFORMATION

(one form for each stream)

Stream ID _____

1 Streamname Sanitary and Domestic Wastewater from Potash Township
(Wastewater waste oil, still bottoms etc)

2 Discharge Identification Disposed into an unnamed Creek
(Enter process or equipment from which stream is discharged)

3 Stream flow/quality

minimum flow _____ L/min
maximum flow _____ L/min
average flow 500 L/min

4 Is stream continuous or intermittent? Continuous

5 Which of following is the cause of the waste? *

a Process chemistry = (Reaction stoichiometry kinetic yield)
Describe

b Engineering Design (capacity pressure temperature limitation etc) Describe

c Operations = (operating rates order of addition etc) Describe

Maintenance = (leaks spills corrosion etc)
Describe

6 Are the components of the waste stream a raw material (RM) product (P) useful b,product (UPB) nonuseful byproduct (NBP) solvent (S) catalyst (C) or an impurity (I) in the raw material?

(Attach analysis records if possible)

Fill out attached Figure 1 for each waste stream

* This Domestic wastewater is associated with human activity

BEST AVAILABLE COPY

WQICP WASTE MINIMIZATION AUDIT

Facility Name _____ Auditor/Firm _____

Date _____

Component Name	Conc (mg/L)	Check One RH	P	UBP	NBP	S	C	I
Regular Domestic Wastewater	None							

7 Waste stream characteristics -- pH ____ TSS ____ TDS ____
Color ____ Hardness ____ Odor ____ TOC ____ Other ____

8 Current disposition of the stream To an unknown Creak (wadi)

9 Current effluent criteria and disposal limitation None

10 Permits relevant to the waste stream disposition None

11 Current cost of disposal and/or treatment for this waste stream Not Known

12 If stream is currently being treated list YES

a Current treatment parameters (chemical consumption treatment conditions etc) pls see attached Data Sheet provided by APC employees. This sheet is presented in Appendix C

b Existing treatment equipment (identify size and type of equipment)
Aeration Tank $V = 317.3\ m^3$, Concrete
Settling Tank $SA = 50\ m^2$
Chlorination Tank $V = 18.75\ m^3$

BEST AVAILABLE COPY

WQICP WASTE MINIMIZATION AUDIT

Facility Name APC Auditor/Firm HARZA and RSS

Date

Other pertinent information See attached Data Sheet presented in Appendix C

WQICP WASTE MINIMIZATION AUDIT

Facility Name: APC Auditor/Firm: HARZA and RSS

Date: 8/13,14/1994

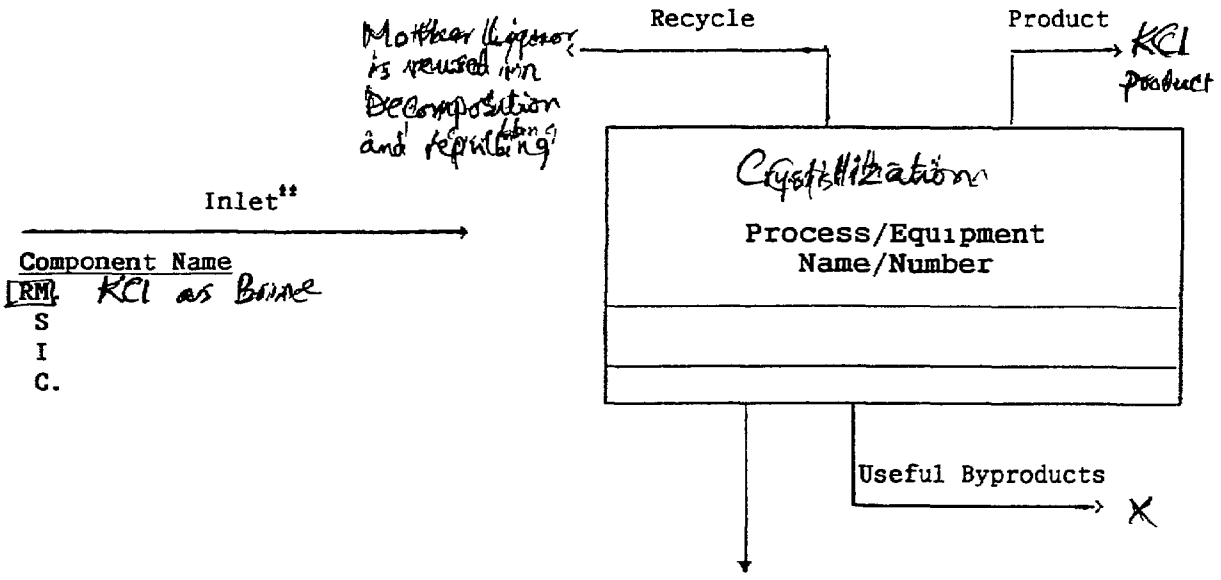

	Name	(mg/L)
RM		
C		
S		
I		
UBP		
NBP		
P		

where

C = Catalyst RM = Raw material

I = Impurity in the raw material S = Solvent

NBP = Non-useful by product UBP= Useful byproduct

P = Product

** If UBP, P, or NBP appears in the inlet/feed to a unit operation, then it was formed in the previous piece of equipment Trace it back to the unit in which it was formed

Figure 1

X None

101

POTASH INDUSTRY

ADDITIONAL QUESTIONNAIRE

1 How much steam is used to heat brine solution in sylvinite process? Is condensate 100% recycled?

2 How much steam is used to maintain vacuum in crystallizer? Is 100% condensate collected in the reclaim tank? If not, where it is discharged?

3 How much water is reclaimed daily?

4 How much reclaimed water is used daily?

5 How much water is discharged to tailing pile?

6 How much water is used in electrostatic precipitator dust handling? Where it is discharged?

7 What kind of water treatment used for treating boiler make up water? What is the treatment capacity?

8 What happens to the wastewater generated due to water treatment process? How much is generated daily?

9 Provide a listing of water flow meters currently installed

10 Provide a listing of water flow meters planned to be installed in the near future

11 (TDS), salinity, sodium, potassium, magnesium, calcium, pH etc

12 How much brine is discharged through C-7 pond to Truce Line Flood Channel?

13 What water conservation measures are currently being taken?

14 What water conservation measures are planned to be taken in the future?

15 What are plans for future facility expansion?

16 Would these expansion plans result in

- Utilization of $MgCl_2$ brine to produce magnesium compounds, bromine etc, and
- NaCl utilization in generating sodium compounds, chlorine etc

This should eliminate $MgCl_2$ brine discharging to the Dead Sea and storage of crude NaC1

17 When will these plans will be implemented?

18 Are there any specific plans for replacing fresh water with brackish water?

19 How much water can be saved by the cold crystallization process?

20 For the cold crystallization process, please clarify the following

- How much of $460m^3/hr$ water used for carnallite decomposition will be diverted to the cold crystallization process?
- How much of $120m^3/hr$ water used for vacuum crystallization will be diverted to the cold crystallization process?
- Water diverted to the cold crystallization process in addition to the existing demand
- Will the net effect be reduction in the total water usage for carnallite process and crystallization (i e , in relation to the new facility if it were designed using the hot leach process)?
- How much water will be required for the centrifuge wash cycle? Where will this water come from?
- Please complete the following

  Water In Water Out
  Brine Moisture to Atmosphere
  Fresh water Slurry to Tailings
  Wash water Return Brine to Pond

21 Are there any analytical reports for

- Sewage treatment plant influent
- Sewage treatment plant effluent
- Water discharged to sewer
- Water discharged to flood channel
- Water discharged to lagoons
- Fresh water

If available, can we have a copy of the report?

22 Confirm the following water demand

MMT/Yr	MM^3/Yr
1 4	7 5
1 8	9 5
2 2	11 4
with other chemical production	21 0

APPENDIX C

BACKUP INFORMATION PROVIDED BY THE INDUSTRY

BEST AVAILABLE COPY

THE ARAB POTASH COMPANY

WATER CONSUMPTION RATES FOR THE YEAR 1993

TOTAL CONSUMPTION = 7,508,758 m3

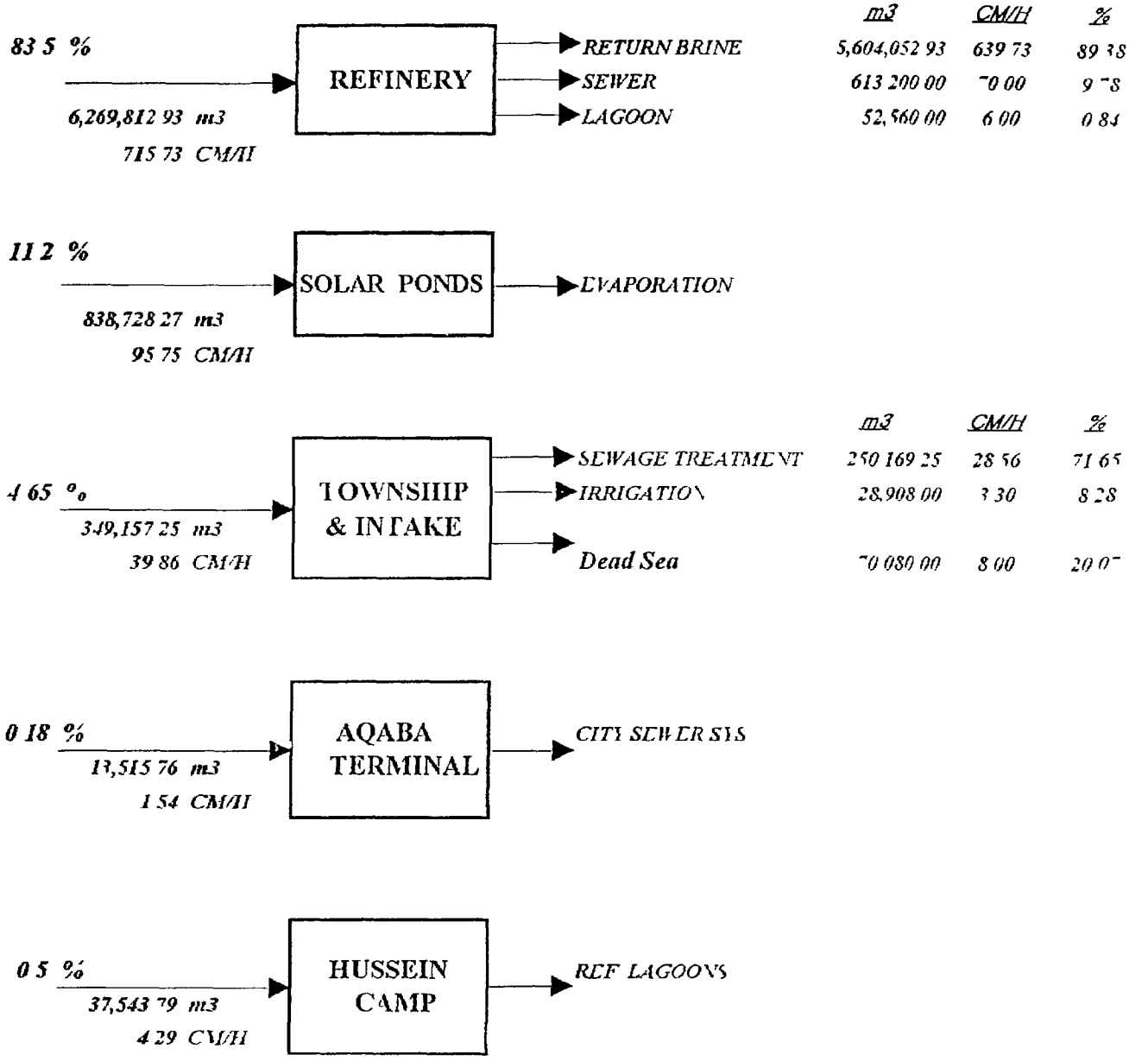

WCR93 XLS/DSK-2

106

THE ARAB POTASH COMPANY

WATER CONSUMPTION RATES FOR THE YEAR 1993

REFINERY CONSUMPTION = 6,217,253 m3

64 8 % → **CARNALLITE AREA**

4,029,600 m3
460 CM/H

16.9 % → **CRYSTALLIZER AREA**

1,051,200 m3
120 CM/H

7 04 % → **OPERATIONAL REQUIREMENTS** (FLUSHING WASHING PUMP SEAL)

438,000 m3
50 CM/H

11 27 % → **POWER PLANT**

700,800 m3
80 CM/H

BASIS OF DESIGN

Application	Foul Sewage only
Persons	Residential 3000
BOD load @ 55 grms BOD/person/day	165 kg BOD/day
DWF @ 240 litres/person/day	720m^3/day
Average flow rate @ DWF over 24 hrs/day	30m^3/hour
Peak flow rate @ 3 x average	90m^3/hour
Total BOD (all sources)	165 kg/day
Peak flow rate (all sources)	90m^3/hour
Aeration tank loading	0 26 kg BOD/m^3/day

Plant Configuration

1 Two stream plant, each for 1500 population
2 Concrete tanks, mainly below ground
3 Gravity feed
4 Mechanical rotating screen plus standby hand rake screen
5 Chittenden & Howard Limited Aerator with wash [illegible]
6 Duty and standby sludge recirculation pumps for each plant stream

Capitox Model - Below ground gravity feed

Electrical Supply 380V 3pH 50Hz

Effluent discharge standard

20mg/l BOD
30mg/l S.S.
5mg/l Ammonical Nitrogen
2mg/l Dissolved Oxygen

For each stream - 82 5 kg BOD/day
45m^3/hour - peak flow

Settlement tank surface area $= \frac{45}{0\ 9} = 50m^3$

Aeration tank capacity $- \frac{82\ 5}{0\ 26} = 317\ 3m^3$

Oxygen required $= \frac{4 \times 82\ 5}{24} = 13\ 75$ kgO2/hour

Aerator shaft power $\frac{13\ 75}{2} - 6\ 875$ kW shaft

108

Sludge Recirculation

Recirculation rate @ peak hourly flow rate of raw sewage with max of 3 x average flow rate = $45m^3$/hour

Sludge Assessment (for each plant stream)

Daily BOD 82 5 kg BOD/day

Sludge growth index for 0 5 sludge produced/1 0 BOD removed

Dry solids 41 3 kg/day
Estimated surplus sludge 4 $13m^3$/day
@ 1% dry solids

Aeration tank capacity 317 $3m^3$

MLSS concentration 2250 to 5000 mg/l

Surplus sludge capacity of aeration tank @ 2750 mg/l 317 $3m^3$
Thus dry solid 875 kg

Daily dry solids produced 41 3kg/day

Theoretical surplus sludge capacity of aeration tank in days $= \frac{875}{41\ 3} = 21$ days

Each aeration tank to be desludged every 14 days
Daily volume of sludge produced in each aeration tank is 4 $13m^3$

∴ 14 x 4 13 = $58m^3$/14 days surplus sludge

Each aeration tank = $318m^3$
Depth = 3 3m
of $96m^3$/m depth of tank

For each desludging (every 14 days), level in aeration tank to be lowered by 0.6m

Sludge Storage tanks (2 off)

Each tank = 5 0m dia x 4 0m water depth

Capacity of each tank = $78m^3$ (or $20m^3$/m depth)

Assume 50% supernatent water after 24 hours consideration

Total sludge storage capacity x 2 x 78 = $156m^3$

PLANT ITEMS

1 Screening and Maceration

Peak flow rate of raw sewage = $90m^3$/hour

Screen base 6mm thick x 40mm wide
Bar spacings 20mm (approx)
Openings Screen width ratio 0 77 1 00

Design for velocity of 0 3m/sec along screen channel

For flow of $90m^3$/hour -

$$\text{Cross section of flow} = \frac{90}{60 \times 60 \times 0\ 3} = 0\ 08m^2$$

Depth of flow in screen channel at $90m^3$/hour at velocity of 0 30 m/s

$$= \frac{0\ 08}{0\ 5} = 0\ 16m \text{ deep}$$

Phased operation by process timer

Variable 0 - 60 minutes operation
Variable 0 - 60 minutes of period

Operation refer to CHITTENDEN & HOWARD LIMITED instruction manual

2 Aeration tank

Designed hydraulically, for full plant peak flow through each aeration tank

Full plant peak sewage flow = $90m^3$/hr
Full plant sludge recirculation = $90m^3$/hr
Total flow to aeration tank = $180m^3$/hr

Fittings

i) Concrete aeration tank (rectangular) (2 off)

Design vol	=	317 $3m^3$
Actual vol	=	326 $7m^3$
Water depth	=	3 3m
Width	=	9 0m
Length	=	11 0m
Freeboard	=	0 6m

ii) Simcar SAL aerator (2 off) 1080mm dia
83 rpm
0,870 gearbox
11 kW etc

iii) Aerator support tripod with flow inducer (2 off)

iiiv) Walkway, Decking, Handrails (2 off each)

v) Weir outlet box, Screen outlet pipe 900mm weir (2 off each).

vi) Sludge removal pipe with valve (2 off)

3. Settling Tank and Accessories

Peak flow through one tank = $90m^3/hr$

Sludge draw off -

Recirculation based on 50% of total plant recirculation for each plant stream

Recirculation rate per tank = $45m^3/hr$

Fittings

i) Concrete settlement tank (circular) (2 off)

Surface Area	S A (design)	=	$50m^2$
	S A (actual)	=	$50\ 265m^2$
Water depth		=	2 2m
	diameter	=	8 0m
	free board	=	0 3m

ii) Fixed bridge scraper mechanism (2 off) 8 0m dia plus scum sweep

iii) Distribution box, inlet pipe and coupling 2 off)

iv) Peripheral weir plates/scum baffle with outlet pipe (2 off each)

v) Sludge draw-off outlet of 150mm dia

vi) Scum removal device with discharge piping off 80mm bore

4. Sludge Recirculation

Duty and standby pumps for each settling tank, requiring 50% of total plant recirculation per tank

ie Each tank $45m^3/hr$

Fittings

i) Sludge recirculation pumps (D & S 8W) (2 off

Type ABS AFP-003
Flow rate $45m^3/hr$ @ 5 0m head, 2 2kW motor

ii) Sludge chamber with flow regulator (for one tank) (2 off)

iii) Pump delivery piping to aeration tank 100mm dia plus delivery piping to sludge storage tank 100mm dia

iv) Sludge piping with valve - Settlement tank to sludge chamber Sludge chamber to pump suction

v) Lifting davit, chain and pully block

5. Re-Aeration

Based on 30 minutes retention in re-aeration tank at 42% of peak flow = $\frac{90}{2 \times 24}$ = 18 75m^3

Peak flow = 90m^3/h
Dissolved oxygen required = 2mg/l

Oxygen required at peak flow rate = $\frac{90 \times 1000 \times 2}{10^6}$ = 0 18kg/hr

For short period retention and allowing a factor of 5 ,
Then oxygen admitted = 5 x 0 18 = 0 90kg O_2/hr

Fittings

i) Concrete aeration tank (rectangular) (1 off)

design volume	=	18 75m^3
actual volume	=	18 00m^3
water depth	=	2 00m
width	=	3 00m
length	=	3 00m
free board	=	0 60m

ii) Simcar SAM aerator (1 off)

440mm diameter
154 rpm
0 227 HD gearbox
1 1 kW motor
max O_2 transfer 0 95 kg/hr

iii) Dewater support tripod with flow inducer (1 off)

iv) Walkway, Decking, Handrails (1 off each)

v) Outlet

6 Chlorination

Chlorine reaction tank -

30 minutes retention at 42% of peak flow

= $\frac{90}{2 \times 24}$ = 18 75m^3

112

Chlorine dosing tank should not be less than 15 mg/l

$\therefore$ Chlorine dose at peak flow $= \frac{90 \times 1000 \times 15}{10^6} = 1.35$ kg/hr

or $\frac{90 \times 1000 \times 15}{60 \times 60} = 375$ mg/sec

Fittings

i) Reaction tank of concrete construction (1 off)

design volume	=	18.75m^3
actual volume	=	18.00m^3
water depth	=	2.00m
width	=	3.00m
length	=	3.00m
freeboard	=	0.60m

ii) Vacuum pattern chlorinator

iii) Cylinder fittings and pipework

iv) Pump and pipework

7 Control Panel

i) M.S weatherproof cubicle for mounting standard starter and controls

ii) Remote emergency stop stations

8. Spares

i) Electric spares

ii) Mechanical Spares

THE ARAB POTASH COMPANY
PROCESS DESCRIPTION

INTRODUCTION

The Arab Potash Company is located at the south end of the Dead Sea in Jordan at 178km south of the Jordanian capital of Amman the company utilizes two of Jordan's most abundant natural resources solar energy and the mineral rich brine of the Dead Sea

Carnallite is a mineral of the following chemical formula $MgCl_2$ KCl $6H_2O$ which exists in the natural state in many countries of the world it may exist more or less pure mixed with Sodium Chloride and other natural salts The essential interest of Carnallite resides in the potassium Chloride that it contains with a theoretical content of 26 83 % in the pure product

Chemical content of the Dead Sea brine which has a density of 230 gr cc holds a unique assemblage of salts It is rich in Calcium Magnesium Potassium Sodium and Bromine with an average salinity of 350 grams of salt per kilogram of water the estimated total amount of these salts is over 43 billion ton The typical composition by wt is

Sodium Chloride	7 8 %
Potassium Chloride	1 21 %
Magnesium Chloride	14 48 %
Magnesium Bromide	0 48 %
Calcium Chloride	3 75 %
Water	72 28 %

In solar evaporation system (which is the most important) Dead Sea brine is pumped into a series of large ponds (a total of 100 m^2) enclosed by man-made dykes The resulting Potash rich ore (which precipitated as Carnallite) in the ponds is then harvested by sophisticated floating harvesters

When it is desired to extract Potassium Chloride the Carnallite subjected to a selective dissolution in a well determined quantity of water in order to remove Magnesium Chloride by making use of the equilibrium which exists between Carnallite Potassium Chloride and Sodium Chloride in its saturated solution a so-called operation of decomposition'

The decomposition of Carnallite is an example of incongruent dissolution When water is brought into contact with the Carnallite the rhombic crystals dissolve and because of the common ion effect small cubic Potassium Chloride crystals form in a vicinity of the dissolving Carnallite

The resulting solids from the decomposition are Potassium Chloride and Sodium Chloride the mixture being called Sylvinite

Two processes are industrially applied in order to obtain pure Potassium Chloride from Sylvinite

1) The process of Hot Leaching, which employs the difference in solubility hot and cold of the Potassium Chloride consists in treating the two minerals (KCl and NaCl) in a hot mother liquor and in cooling it During the first phase only the Potassium Chloride dissolves during the second phase after filtration of the undissolved NaCl only the Potassium Chloride crystallizes from the solution it is consequently easy to obtain it in a satisfactory state of purity and with a granularity complying with current standards

2) The process of Flotation in which the choice of appropriate reagents prompts the affinity of the crystals of Potassium Chloride with the air bubbles injected into a suspension of KCl and of NaCl in saturated water these air bubbles selectively entrain the Potassium Chloride towards the surface of the liquid where it can then be separated but this process can yield only a Potassium Chloride with fine granularity besides a supplementary stage of washing is necessary to obtain higher purity

Hot leaching process which is the main process in the Arab Potash Company although yields Potassium Chloride with standard granularity and satisfactory state of purity is not without drawbacks Hot leaching requires complex installations allowing in particular crystallization by cooling in crystallizers where the water is evaporated under vacuum besides that the consumption of heat energy remains very high as well as the consumption of water necessary for cooling the last stages of crystallization

This is why the best process consists in enriching the Carnallite in priority to remove therefrom the maximum NaCl that it contains by flotation and then in decomposing this Carnallite under conditions where the size of the grains of KCl produced is artificially enlarged Consequently a product is obtained which complies with the required standards concerning both the content and the granularity

This is actually the new process to produce KCl in Arab Potash Company expansion a so-called "Cold Crystallization Plant"

The crystallization of Potassium Chloride proceeds in two separate steps i e , dissolution of Carnallite and crystallization of the Potassium Chloride and is therefore difficult to control When the Carnallite crystals are small, dissolution is faster than crystallization On the other hand when the Carnallite crystals are large dissolution is slower than crystallization Thus the decomposition of small Carnallite crystals usually gives rise to higher supersaturation and consequently to more nucleation and finer Potassium Chloride crystals Because of both mechanical and marketing reasons Potassium Chloride crystals obtained by the decomposition of large slowly dissolving Carnallite crystals are preferred

SOLAR EVAPORATION METHOD

The Salt Ponds are considered to be the key element in the Potash recovery process Due to high evaporation rate most of the Sodium Chloride is deposited and the water content of the brine reduced bringing the density to 1 290 gr/cc

At the end of the Salt Ponds the brine is transferred to the Pre-Carnallite Pan (PC2) by gravity flow This Pond acting as a control measure facilitates the control of the brine composition at the 'Carnallite Point' This is the concentration at which the brine is saturated with Carnallite but no Carnallite has yet precipitated The density of the brine is further increased at this stage reaching 1 295 to 1 310 gr/cc in PC2

The last six Ponds finalize the evaporation process by the precipitation of the Carnallite double Salt, through series flow from Pond C-3 to Pond C-2 to Pond C-1 to Pond C-5 to Pond C-6 and finally to Pond C-7 (refer to fig 1)

Brine from Pond C-7 which now contains little Potassium Chloride and has a density of 1 340 gr/cc is then discharged into the flood channel and flows back to the Dead Sea

The precipitated Carnallite in these Ponds which contains 84% pure Carnallite and 16% Sodium Chloride is harvested as a slurry from beneath the brine by six floating tracked harvesters and delivered to booster pumps on the dykes via a floating line The Carnallite slurry is then pumped to the Refinery through steel pipes

EXISTING HOT LEACHING REFINERY

The APC's plant is now operating at a production rate equivalent to 1 4 MMTPY utilizing the hot leach process as described below

The Carnallite slurry is received dewatered and decomposed with water in two stages of agitated tanks (refer to fig 2) The resulting solids from the decomposition are Potassium Chloride and Sodium Chloride the mixture being called Sylvinite The Sylvinite is dewatered and washed The resulting Sylvinite cake is leached using four agitated tanks in a two stage process Heated brine returned from the crystallization process is used for leaching Potassium Chloride from the Sylvinite. The Potassium Chloride is dissolved leaving the Sodium Chloride as solids The hot brine now saturated with Potassium Chloride. is clarified in a thickener

The Hot Thickener underflow slurry containing Sodium Chloride crystals is dewatered repulped with waste brine and pumped to tailing

The hot brine from the Hot Thickener overflow which is saturated with Sodium and Potassium Chlorides is cooled successively in a five-stage draft tube baffle vacuum crystallizer system from 93°C to 49°C Upon cooling Potassium Chloride (KCl) decreases in solubility and crystallizes under controlled conditions Potash slurry from the last stage crystallizer is directed to the product hydrocyclones where partial dewatering takes place The underflow of the cyclone is sent to centrifuges for further dewatering

The cake from the centrifuges is conveyed to an oil-fired cocurrent rotary dryer to remove the last traces of moisture entrained with the crystals Product from the dryer is sent to the screening system while the dust is collected using cyclones and an electrostatic precipitator

The product discharged by the dryer goes to the screening section where it is segregated into two product grades standard and fine Granular product is obtained by compaction of fine and/or standard fraction

An anti-caking agent is added to all products in carefully controlled amounts to minimize the natural tendency of Potash to agglomerate during storage and shipment Free flowing properties are thus insured to facilitate handling of these products by the customer

COLD CRYSTALLIZATION PROCESS

The present invention employs a process of beneficiation applied to the Carnallite itself which gives it before the decomposition phase the required purity to guarantee for the Potassium Chloride obtained by the subsequent composition a purity equal to or greater than 95% of KCl To that end the purity required for the Carnallite must be no less then 95% with a balance of 5% at the most of NaCl

The invention consists in engaging the crude Carnallite portion containing the naturally present proportion of Sodium Chloride in a process of purification by flotation in order to remove therefrom a considerable part of the Sodium Chloride that it contains

The purity of the granulometric fraction of Carnallite above 2.5 or 3 millimeters is sufficiently high in order not to require a purification In the first stage it is consequently sufficient to separate the higher granulometric fraction by sieving the crude Carnallite with a mesh of chosen cut to have a granularity which lends itself well to the flotation operation this granularity is determined by the nature of the Carnallite to be treated currently within the range of 0 to 3 millimeters

The second stage of the process consists in subjecting the undersize Carnallite thus prepared to an operation of flotation by using an appropriate reagent for the purpose of separating a so-called 'floating" fraction (which will be entrained to the surface of the reaction medium thanks to the selective catching of air bubbles and which contains major part of the Sodium Chloride present) from a second so-called 'sunken' fraction which remains at the bottom of the reaction medium and which contains the major part of the Carnallite A brine/Carnallite ratio judiciously chosen as a function of the quality of the Carnallite the configuration of the flotation cells and the nature of the reagent employed should be applied in order best to promote physical operation of the flotation

In the third stage the oversize from sieving besides the enriched Carnallite obtained from flotation which contains minimum amount of NaCl is then conveyed towards the decomposition phase which may advantageously be carried out by the process with artificial growth of the grains of KCl produced and thus lead directly to a Potassium Chloride of commercial quality satisfactory in content and in granularity

Decomposition and Crystallization are taking place in crystallizers under ambient pressure and temperature Crystallizers product is then transferred to the two stage leaching process in which water is added to remove partially the $MgCl_2$ and NaCl The Potash product is then dewatered by product thickener product centrifuges and finally dried in the cocurrent rotary dryer Potash product is then cooled in the counter current rotary cooler The product is then screened to fine and standard products

A pilot plant was designed by Wellman-England and MDPA-France and constructed by APC in 1989 at the site to determine the parameters necessary for the design of a commercial plant The pilot plant was operated for two years During this time a suitable method was developed to upgrade the Carnallite feed to acceptable Carnallite purity and a draft tube crystallizer was designed to decompose Carnallite with water and form KCl crystals of suitable grade and size (refer to fig 3) The commercial plant was then designed and constructed based on the knowledge gained from the pilot plant operation

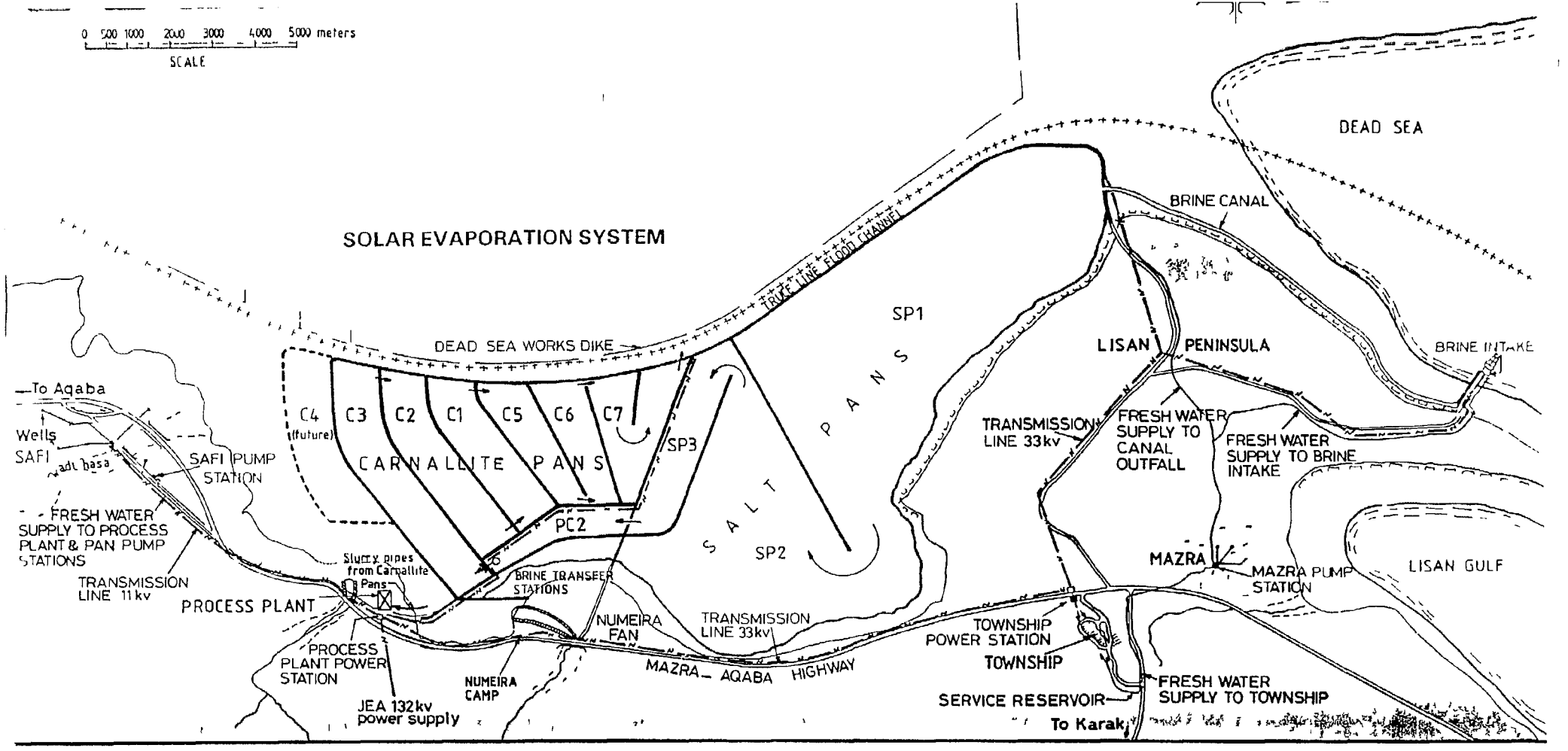

THE ARAB POTASH COMPANY LTD.

THE HASHEMITE KINGDOM OF JORDAN

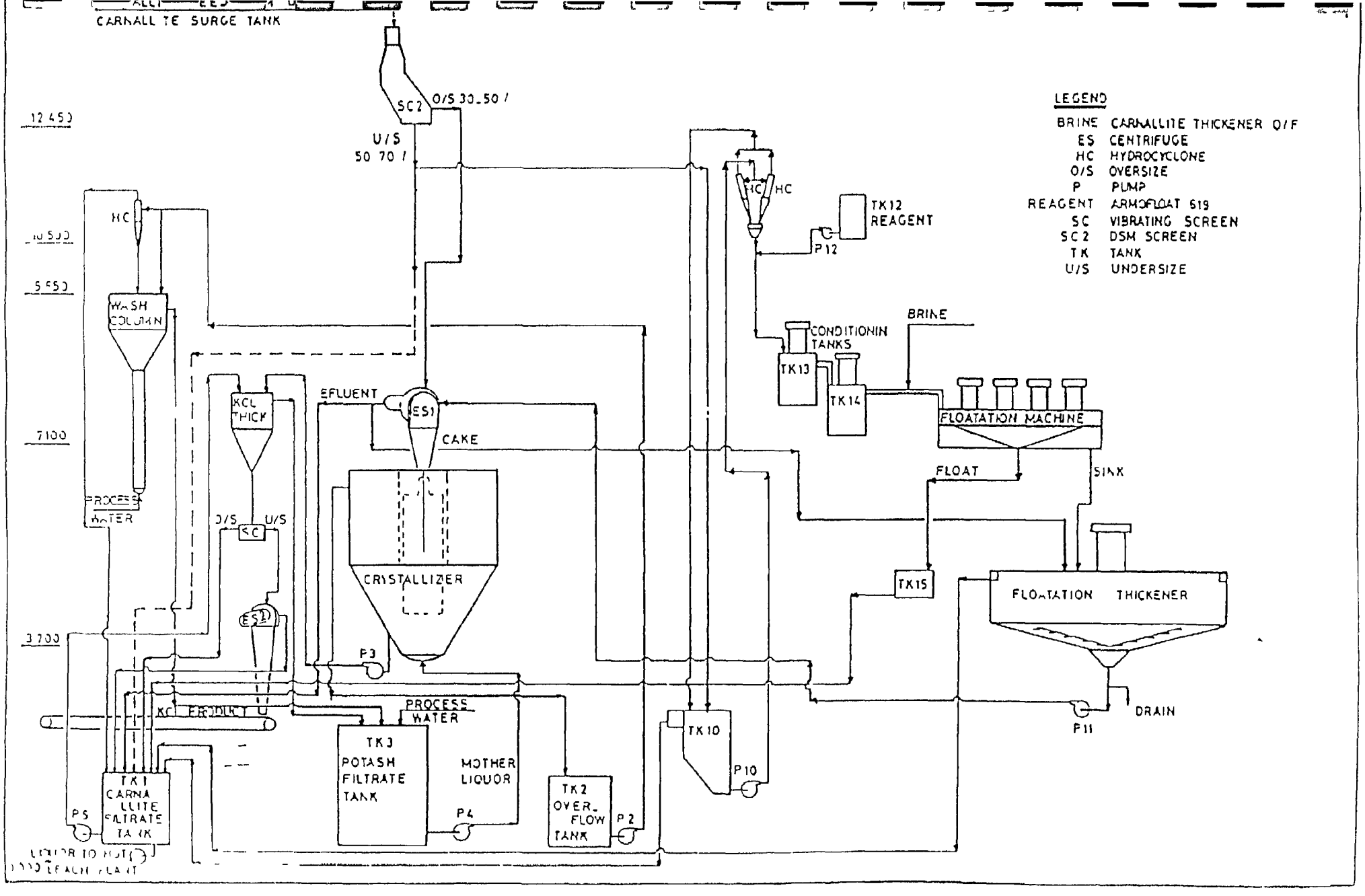
CARNALLITE SURGE TANK
SC2
O/S 30-50 /
U/S
50 70 /
12 450
10 500
5 550
7100
3 700
HC
WASH COLUMN
PROCESS WATER
KCL THICK
O/S
U/S
SC
ES2
EFLUENT
ES1
CAKE
CRYSTALLIZER
P3
KCL PRODUCT
PROCESS WATER
TK3 POTASH FILTRATE TANK
MOTHER LIQUOR
P4
TK1 CARNALLITE FILTRATE TANK
P5
LIQUOR TO HOT LEACH PLANT
TK2 OVER-FLOW TANK
P2
TK10
P10
HC
HC
TK12 REAGENT
P12
CONDITIONIN TANKS
TK13
TK14
BRINE
FLOATATION MACHINE
FLOAT
SINK
TK15
FLOATATION THICKENER
P11
DRAIN
LEGEND
BRINE CARNALLITE THICKENER O/F
ES CENTRIFUGE
HC HYDROCYCLONE
O/S OVERSIZE
P PUMP
REAGENT ARMOFLOAT 619
SC VIBRATING SCREEN
SC2 DSM SCREEN
TK TANK
U/S UNDERSIZE

ARAB POTASH COMPANY

HOT LEACHING PROCESS

(BLOCK DIAGRAM)

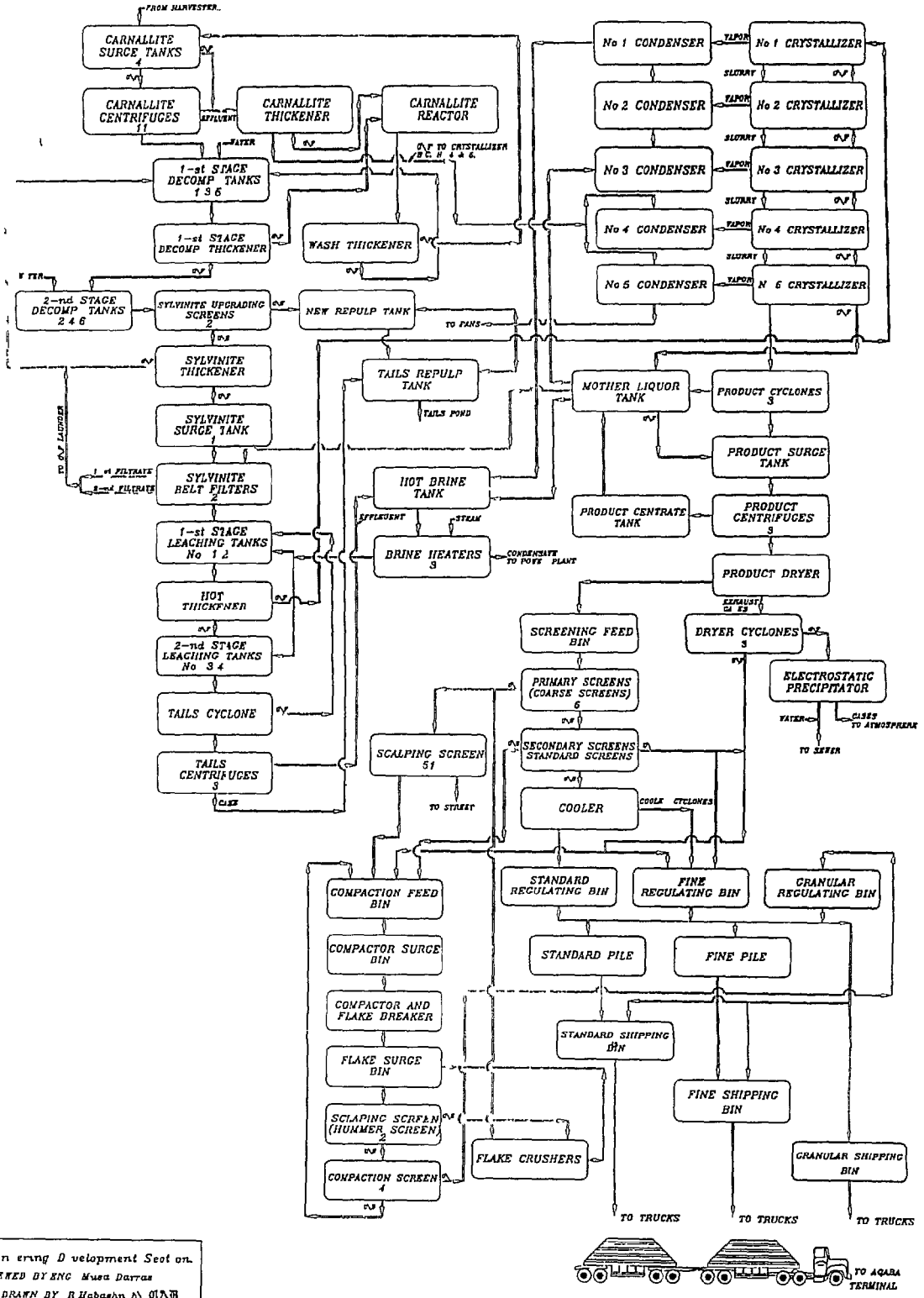

Engineering Development Section
REVIEWED BY ENG Musa Darras
DRAWN BY R Habashn

BEST AVAILABLE COPY

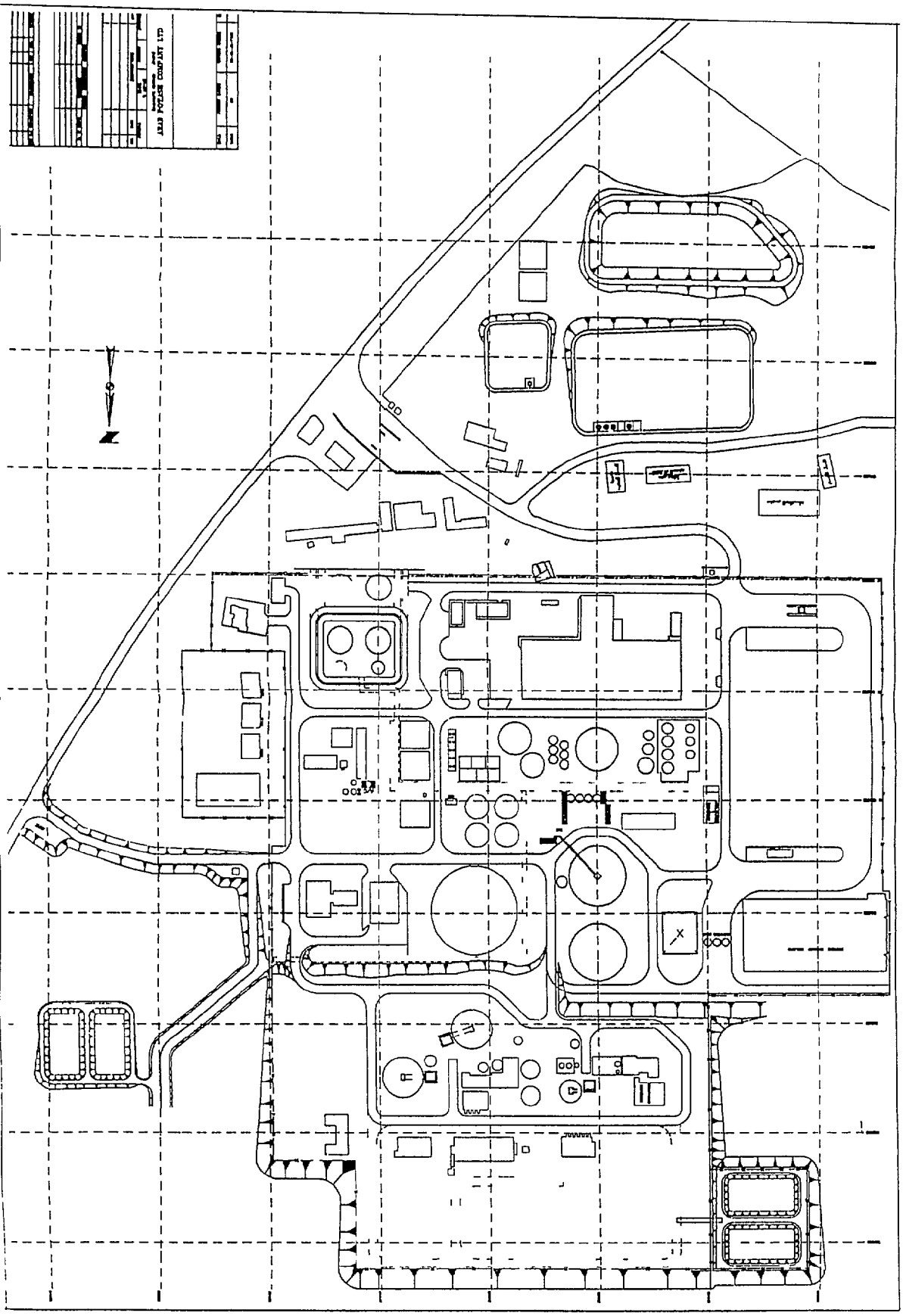

BEST AVAILABLE COPY

APPENDIX D

BACKGROUND MATERIAL REPORT

UNITED STATES AGENCY
FOR INTERNATIONAL DEVELOPMENT

POTASH INDUSTRY

WATER QUALITY IMPROVEMENTS AND CONSERVATION PROJECT

Industrial Wastewater Discharge Prevention Program

Development Alternatives, Inc

HARZA *Consulting Engineers and Scientists*

August 1994

125

POTASH INDUSTRY BACKGROUND MATERIALS

INDUSTRIAL WASTEWATER DISCHARGE PREVENTION WATER QUALITY IMPROVEMENT AND CONSERVATION PROJECT

Amman, Jordan

TABLE OF CONTENTS

1 0	**INTRODUCTION**		**1**
	1 1	BACKGROUND	1
	1 2	OBJECTIVES	1
2 0	**INDUSTRIAL OVERVIEW**		**3**
	2 1	TYPICAL PROCESSES	3
	2 2	WASTES, EMISSIONS AND DISCHARGES	5
3 0	**POTASH INDUSTRY IN JORDAN**		**7**
	3 1	POTASH CONVERSION PROCESS	7
	3 2	WATER USE	9
	3 3	WASTEWATER DISCHARGES	10
	3 4	WASTES AND BY-PRODUCTS	10
4 0	**AREAS FOR POTENTIAL IMPROVEMENT**		**12**
	4 1	POLLUTION PREVENTION	12
	4 2	WASTE MINIMIZATION	13
	4 3	WATER CONSERVATION	14
5.0	**REFERENCES**		**16**

Figure One: Generalized Process Schematic for the Potash Industry

Figure Two Potential Water Conservation Techniques

Appendix A· Selected Process Diagrams for the United States Brine and Evaporite Chemicals Industry

1.0 INTRODUCTION

This document presents the materials collected as background information for a pollution prevention, waste minimization, and water conservation audit of the Jordan potash industry

1 1 BACKGROUND

Development Alternatives, Inc (DAI) under a contract with the United States Agency for International Development (USAID) is performing an Industrial Wastewater Discharge Prevention Program in Amman, Jordan This Program is one of the four components of the Water Quality Improvement and Conservation project, funded by the USAID The Program is being performed by DAI with full coordination between the Ministry of Water and Irrigation and the Amman Chamber of Industry This Program includes conducting the PP/WM audits, feasibility studies, and designing for demonstration activities at selected industrial facilities

PP/WM techniques are defined as any techniques to prevent or reduce waste generation by source reduction or recycling activities These activities must reduce either the volumes or the concentrations of pollutants generated prior to treatment, storage, or disposal of the waste

Based on a ranking methodology, the PP/WM Committee has selected ten industries with potential needs for PP/WM audits One of these industries is the "potash industry" Harza Consulting Engineers and Scientists (Harza), Chicago/USA, has been retained by DAI to lead the PP/WM audit for this industry

The purpose of these audits is to assist the industries in the Amman-Zarqa Basin to assess pollution problems and the alternative solutions to achieve desired levels of pollution prevention, water conservation, and wastewater treatment under the following subtasks

- Subtask 1 1 - Audit Coordination,
- Subtask 1 2 - PP/WM Background Materials Preparation,
- Subtask 1 3 - Pre-Investigation Meeting,
- Subtask 1 4 - Audit,
- Subtask 1 5 - Post-Inspection Meeting, and
- Subtask 1 6 - Audit Evaluation Report

1 2 OBJECTIVES

In this document, background information has been assembled by performing a comprehensive literature review The purpose of the literature review was to identify the available techniques and clean technologies being practiced for PP/WM for the industry under Subtask 1 2 The objective of this document is to present the results of this review

with a focus on the techniques and technologies being practiced for PP/WM for the potash industry

The literature review included the following sources published literature, personal contacts with the United States (U S) Environmental Protection Agency (EPA), and conversations with personnel within the United States potash industry The literature consisted of PP/WM related articles, journal articles, conference proceedings, U S EPA documents and communications, and books on pollution and controls

Section 2 0 of this report provides an world-wide overview of the potash industry, while section 3 0 details potash processing from Dead Sea brine Section 4 0 describes areas for potential improvement in regards to pollution prevention, waste minimization, and water conservation Finally, section 5 0 lists the main references consulted during the literature copies of the appropriate sections of these references are provided under a separate cover

128

2.0 INDUSTRIAL OVERVIEW

Potash is a valuable component in the agriculture industry It is the product of various chemical and industrial processes that garner it from very concentrated brine solutions Potash is produced in three chemical forms muriate of potash (KCl), sulfate of potash-magnesia (K_2SO_4 x 2 $MgSO_4$), and sulfate of potash (K_2SO_4) Its use in crop fertilization has made the agriculture industry much more productive and efficient It has also aided in the advancement of the chemical industry

The potash mineral industry converts naturally occurring minerals into forms suitable for use in chemical and fertilizer production The conversion of naturally occurring minerals into fertilizers involves both surface and underground mining and many beneficiation steps Wastes or by-products are generated by mining, processing, and transfer activities, as discussed later in this document

2 1 TYPICAL PROCESSES

Potash is primarily derived from two sources ore and brine In conjunction with one of these two sources, water is the only other significant raw material

Potash (as KCl) yielding ore is generally classified into one of two categories sylvinite or carnallite These classifications are based upon the chemical composition of the ore, which is largely a function of the ore's geographic origin Processes used to convert these ores into potash are described below, along with the processes used to convert brine to potash

Potash (as K_2SO_4 x 2 $MgSO_4$ or K_2SO_4) is produced through the mining of an ore known as langbeinite Langbeinite processing was not further considered during the generation of this report its unit operations only indirectly correlate with the processes used by the Arab Potash Company

2.1.1 Sylvinite Processing

Sylvinite is a mixture, in varying proportions, of potassium chloride and sodium chloride crystals It is the easiest ore to process Geographic sources of sylvinite include Saskatchewan, Canada and New Mexico, United States Several processes are used to separate potash from the ore

> **Hot Leaching.** This process takes advantage of the different solubilities of potassium chloride as compared to sodium chloride at varying temperatures Potassium chloride is more soluble in hot water than in cold, sodium chloride's solubility varies only slightly within the temperature range of 20°C to 100°C, and in solutions saturated with respect to both potassium chloride and sodium chloride

129

its solubility further decreases at the higher temperatures

The ore is first crushed and then mixed with recycled brine heated almost to boiling in sufficient quantities to dissolve the potassium chloride This brine is nearly saturated with sodium chloride and potassium chloride After saturation with potassium chloride, the brine is cooled by vacuum evaporation resulting in potassium chloride crystallization Brine saturated with sodium chloride is either recycled or subjected to evaporation to crystallize the salt

Flotation Processing Most of the potash of Canada and the United States is recovered from the ore by flotation methods The essentials of this process are to treat the ore with a hydrophobic material which will selectively coat one of the constituents (typically the potassium chloride) of the ore Pressurized air is then bubbled through an ore slurry The air bubbles attach themselves to the coated particles and float them to the surface, while the uncoated particles sink Some plants have been built in which the sodium chloride is floated away from the potassium chloride, but generally the reverse is the more desirable process On a large scale and particularly with high-analysis ores, the flotation process is much cheaper than one involving dissolution and crystallization

Other Methods Several other methods for separating potassium chloride crystals from sodium chloride crystals have been used or proposed These include tabling and electrostatic separation None are presently of commercial importance, however

Combination Methods Depending on factors such as ore quality and fuel cost, many variations of the aforementioned "basic" methods are employed, including combinations of methods it is common to combine flotation with leaching

2.1.2 Carnallite Processing

Most potash ores that are mined contain varying quantities of carnallite Carnallite appears as a minor impurity in North American sylvinite ores, while it is a major potash-bearing ore in some European countries, and it is produced by crystallization in solar evaporation of some natural brines Carnallite is a definite mineral, $KCl \times MgCl_2 \times 6H_2O$ The carnallite can be decomposed by using a regulated amount of water to dissolve the magnesium chloride without dissolving the potassium chloride Sodium chloride is also left undissolved in most cases, so a sylvinite separation process must follow

To handle fluctuations in ore quality, the magnesium chloride leach step is normally a multistage, countercurrent operation To minimize potassium chloride losses, a bleed stream from the sylvinite separation process is used for leaching instead of fresh water

130

2 1 3 Potash Recovery from Brines

In addition to being processed from ore, potash can be converted from certain naturally-occurring brines Processing operations have been constructed to perform these brine conversion operations in the United States in Utah (Bonneville and the Great Salt Lake) and California (Searles Lake), in Israel (the Dead Sea) and in Jordan (also the Dead Sea) Processes used in the United States are described briefly below, and the process used by Jordan is covered in detail in section 3 0 of this report

Bonneville and the Great Salt Lake At these two locations, the brine (which is contained in the soil structure) is collected in drainage ditches or pumped from relatively porous strata and solar-evaporated in three groups of ponds In the first sodium chloride is precipitated, in the second sylvinite, and in the third, among other things, carnallite The third precipitate, after removal of the residual brine is water washed in place and the resulting solution, containing considerable potassium chloride, is recycled to one of the first two groups of ponds The sylvinite from the second step is harvested and the potassium chloride is separated by flotation

Searles Lake This operation was the pioneering production of potash in the United States The brine is withdrawn from a large crystal mass forming a "dry" lake in the California desert and potassium chloride and K_2SO_4 are produced along with a number of other chemicals, including boron, sodium, bromine, and lithium Unfortunately, the process is extremely sophisticated and cannot be adequately described in this report simply stated, the process involves the concentration of potassium chloride and borax in hot brine and the simultaneous separation of salts and other compounds

2.2 WASTES, EMISSIONS AND DISCHARGES

In the United States, potash production typically results in residual clays (if the source was ore) and salts (most prevalently sodium chloride) While it is unclear what the final disposition of these wastes is if there is no market, they are often sold as a by-product of the potash manufacturing process It is also documented that unwanted sodium chloride obtained from Searles Lake is washed back into the lake if no other use exists

The potash manufacturing processes typically emit particulate into the atmosphere during drying, screening, and bagging operations Some data reported for the United States potash manufacturing facilities indicates particulate or dust emissions can vary from 0 4 grams per kilogram (g/kg) of potash produced to 1 8 g/kg The technologies currently used to control these dust emissions are dry cyclonic separators and electrostatic precipitators but other control technologies, such as wet scrubbing, are currently being evaluated

In most potash production operations, very little water discharge exists the residual brine is discharged to tailing ponds where it is evaporated and the solids settled In some cases, underground injection wells are also used to dispose of unwanted brine

3 0 POTASH INDUSTRY IN JORDAN

The Arab Potash Company (APC) commenced production of potash in 1982 at a location 187 kilometers south of Amman in Ghor Al Safi on the shores of the Dead Sea The early production of potash (as KCl) at this refinery was approximately 1 2 million tons annually However, six years later in 1988, production increased to 1 4 million tons and according to estimates, should reach 1 8 million tons in 1994 with the aid of an innovative cold crystallization process

3.1 POTASH CONVERSION PROCESS

The unit operations for potash production that Jordan uses are primarily evaporation and crystallization Specific details of the processes and unit operations are discussed below A "Generalized Process Schematic" is presented in Figure 1

Solar Evaporation

The salts in the Dead Sea are garnered by the use of evaporation incorporating the sun's energy during the summertime An evaporation area of 100 square kilometers is surrounded by 85 kilometers of earth dikes

At the brine intake pumping station located on the Lisan Peninsula, four intake pumps (total capacity of 16 m^3/second) deliver approximately 200 million tons of brine per year to a gravity flow brine canal through a 1 kilometer pipeline The brine flows 10 kilometers through the canal and eventually reaches the solar evaporation pan, which is the largest pan in the system

Deposition.

The solar evaporation pan, considered to be the most significant part of the process, is designed to perform the initial concentration of Dead Sea brine (density of 1 235 gr/cc) Since the solar evaporation pan has such a high evaporation rate, most of the sodium chloride is rendered insoluble and is precipitated, reducing the water content of the brine and bringing the density to 1 298 gr/cc

After evaporation in the solar evaporation pan, the brine is moved to the pre-carnallite pan by gravity flow The pre-carnallite pan, in acting as a control measure, maintains the brine composition at the carnallite point This is the point at which the ore is rich in potassium chloride The brine density is further increased to 1 303 gr/cc

The last six pans complete the evaporation process by precipitating the carnallite The brine left after evaporation in the last pan is discharged into the flood channel

133

and flows back to the Dead Sea

Carnallite Harvesting

The precipitated carnallite left over from the "Deposition" subprocess contains 84% carnallite and 16% sodium chloride The carnallite bed is harvested from beneath the brine by four floating harvesters which are propelled by a four-track system For the greatest carnallite recovery, the harvesters are provided with high technology control equipment which allows for precise movement

After harvesting, the carnallite slurry is conveyed through floating lines to a set of booster pumps which send it to the refinery The brine is transported to the refinery first through a 1 km pipeline and then through a 10 km gravity flow canal The refinery processes are described below

Refinery Processes

The refinery processes consist of carnallite processing to separate out magnesium chloride and sylvinite processing to separate out sodium chloride, followed by crystallization, dewatering, and drying of the final potassium chloride product

Carnallite Processing

As stated previously, carnallite is a definite mineral ($KCl \times MgCl_2 \times 6H_2O$) It can be broken down by using water to dissolve the magnesium chloride without dissolving much of the potassium chloride The carnallite is received and is dewatered and decomposed with water in two stages of agitated tanks After decomposition, sylvinite is precipitated and waste brine, containing magnesium chloride, is discharged from the process The sylvinite is dewatered and washed, and the resulting cake is taken to the next stage

Sylvinite Processing

The sylvinite cake is leached using four agitated tanks in a two-stage process The leaching process takes advantage of the solubility differential of potassium chloride as opposed to that of sodium chloride described previously in this report

Heated brine is used to extract the potassium chloride from the sylvinite cake The potassium chloride is dissolved, leaving sodium chloride solids Saturated with potassium chloride, the hot brine is clarified in a thickener The thickener overflow is pumped to the crystallization process and the underflow brine, containing sodium chloride crystals, is dewatered, repulped

134

with waste brine, and transported back to the Dead Sea

Crystallization

The hot brine from the thickener overflow, containing primarily potassium chloride, is cooled in a five-stage vacuum crystallizer system from 93°C to 49°C When cooled, potassium chloride loses its solubility and thus crystallizes The brine is recycled back to the sylvinite extraction operation

Product Dewatering and Drying

The potash slurry from the crystallizer is taken to the product hydro-cyclones where partial dewatering occurs The underflow of the cyclones is transported to centrifuges for further dewatering

The caked potash from the centrifuges is moved to an oil-fired concurrent rotary dryer to remove any moisture left in the product The product of the dryer is taken to the screening system Dust is gathered using dry cyclones and an electrostatic precipitator

Screening and Compaction

The product from the dryer is separated into four grades granular, coarse, standard, and fine The product is first screened to separate the coarse, standard and fine grades

Parts of the fine and standard grades are taken to the compaction plant where they are converted into granular and coarse grades

An anti-caking agent is introduced into all products in controlled amounts to minimize the tendency of potash to amass during storage and shipment

Storage and Transportation

The final product either goes to the plant product storage warehouse with a capacity of 60,000 tons, or it is moved to shipping bins where it is loaded into bottom-dump trucks for delivery to the warehouse at the port of Aqaba

3.2 WATER USE

Water for the potash conversion process is obtained from two sources deep wells and surface water The average water consumption has been reported to be 7 88 million m^3

135

in 1992 at the APC Water is primarily consumed for the following operations

- To pump salty water from the Dead Sea to the solar evaporation ponds (8-10 m^3/hr),
- To harvest carnallite from pans and to pump it to the refinery (100 m^3/hr)
- To decompose carnallite (flow rate unknown),
- To wash sylvinite (flow rate unknown), and
- For domestic purposes (35 m^3/hr)

3 3 WASTEWATER DISCHARGES

It is documented that overflow from the final carnallite pan is discharged into a flood channel which flows back to the Dead Sea Several other brine discharge streams are anticipated to exist, but their final disposition is unclear These streams include, but are not limited to

- Overflow from the carnallite slurry dewatering process,
- Wastewater from the carnallite decomposition process,
- Wastewater from sylvinite washing, leaching and thickening operations, and
- Domestic uses

3 4 WASTES AND BY-PRODUCTS

The unit operations used in potash manufacturing from Dead Sea brine are (see Figure 1)

- Transportation
- Evaporation
- Precipitation (Crystallization and Clarification)
- Filtration (Centrifugation)
- Drying
- Packaging

The major wastes or by-products generated through these operations are brines containing salts of magnesium and sodium These brines, if used for manufacturing any other marketable commodities, can be considered as by-products If they are wasted in tailings ponds or otherwise discharged, they could be considered wastes because they have no further commercial use and must be disposed

If the brines are discharged in the ponds for complete evaporation, there will not be any effluent discharges but the dried salts will still be considered as solid waste and will require proper storage and handling

Finally, the solids captured by the facility's air pollution control equipment must be handled as wastes unless they are somehow reintroduced into the process or sold as a commercial product

131

4 0 AREAS FOR POTENTIAL IMPROVEMENT

Beyond assembling background information regarding potash conversion processes used worldwide, the primary purpose of this document is to present information gathered from the literature search regarding the latest advances in pollution prevention, waste minimization, and water use conservation

Unfortunately, potash processing is an extremely mature industry in the United States few recent literature sources regarding "state-of-the-art" technologies were discovered Attempts to contact environmental engineers and process engineers were made by Harza, but these attempts usually yielded little information or no replies Additionally, potash conversion from Dead Sea brine is a process very specific to Jordan, and any information gathered from United States sources is applicable only in the broadest of terms

Harza has spent a significant amount of time studying the Jordanian potash conversion processes, however, and has developed the following areas for potential improvement based on that study and the information obtained during the literature review These areas for improvement are broken into the three categories of primary concern pollution prevention, waste minimization, and water conservation In cases where an improvement potential may fall into more than one category, it was listed in the category where it would have the greatest impact

The areas for improvement listed below are only suggestions During the field investigation portion of the industrial audit, the Harza representative will determine the applicability of the suggestions to the industry and the net benefit as well as identifying additional areas for potential improvement

4 1 POLLUTION PREVENTION

Pollution prevention can be defined as reducing the concentration of potentially harmful compounds in the air, water, and solid waste discharges from a facility For the Jordanian potash industry, however, no true pollution prevention opportunities have been identified From an air emissions standpoint, pollution control equipment is in place The brines recycled to the Dead Sea pose little threat to human health and the environment if anything, they are cleaner than when the process began And, since the waste brines are not subjected to evaporation prior to discharge, little solid waste is generated

With this information in mind, Harza focused on potential areas for improvement regarding waste minimization and water conservation

138

further processing

4.3 WATER CONSERVATION

Water conservation can be defined as reducing the process, clean-up, and domestic water use requirements of a facility It is understood that a substantial problem facing the APC is the significant water demand required to flush salt blockages from the brine transport piping While it is unknown exactly where in the process this causes the greatest impact, it is expected that the one-kilometer line from the Dead Sea to the brine canal is the biggest problem The first set of potential water conservation opportunities presented below are aimed at addressing this specific issue

Increase Brine Velocity Although a simplistic solution, this suggestion provides two fronts to address the issue To begin with, an increased velocity reduces the time necessary to transport the brine from the Dead Sea to the brine channel If the salt is crystallizing due to temperature loss, this shortened time may get the brine to the channel prior to the salts precipitating out Additionally, the increased velocity could create a "scouring" effect in the line and aid in removing any salt build-ups which may form

The increased velocity could be realized by decreasing the line diameter or increasing the pumping head Harza would suggest increasing the pumping head a decreased diameter may facilitate a faster "block-off" in the event that a deposit did form

Prevent Crystallization As stated previously, Harza anticipates that crystallization is occurring due to a temperature drop during brine transport If this temperature drop could be prevented, the deposits may not form

Suggestions to prevent this temperature drop are both active and passive in nature Active solutions include developing a "heating jacket" for the line, which would circulate a warm heat-transfer fluid around the pipe to maintain its temperature or actually heating the brine prior to its introduction into the line A surge tank could be used at the beginning of the line to accomplish the latter suggestion, with heat being provided from an oil-burner or, potentially, solar energy Depending on its size, a surge tank could also provide a substantial heat sink to minimize temperature fluctuations that may occur throughout the day or due to seasonal variations The "heating jacket" solution is conceptually shown in Figure 2(A)

Passive suggestions are mainly focused on keeping the line and its contents warm they include insulating the line or simply painting the line black to maximize its solar absorption capacity Another option could be burying the pipeline to aid in retaining its heat content

The more capital-intensive suggestions provided above do not necessarily need to be implemented for the entire line If the APC can define a point after which salt deposition typically has been observed, these solutions could be implemented starting from this point or slightly upstream

Improve Line Flushing Efficiency In the United States, a wide variety of tools have been developed to maximize the cleaning efficiency of flush water by increasing its pressure and cleaning range These tools are typically inserted in a line and flush water pumped through them Their use in Jordan could reduce the amount of flush water necessary to remove a blockage Or, the tools could be used in a preventive capacity to eliminate salt deposits prior to their becoming an actual blockage This solution is conceptually shown in Figure 2(B)

Purge the Transport Line It is unknown if brine is constantly pumped through the transport line or if it is only pumped during certain portions of the day If the pumping is not constant, it may be beneficial to rinse the line with fresh water and drain it rather than letting the brine remain If the brine remains static in the line for a significant period of time, it could cool to the point of precipitating solids which may start deposits

In preparing this document, Harza briefly discussed the possibility of exploring chemical additives to the brine which would inhibit crystal formation This idea was quickly dismissed, however the additive's impact on the final product's purity could not be predicted

The remaining water conservation suggestions described below focus on the potash conversion process, not the brine transport

Magnesium Chloride Reclamation The reclamation of magnesium chloride using mechanical evaporators and condensors, as described above, could provide a clear water stream for use as process or brine dilution water

Avoid Sodium Chloride Repulping. It is unclear why the underflow from the thickener associated with the sylvinite processing step is dewatered and subsequently repulped During the filed investigation, the Harza representative will determine if water use at this step can be minimized by recycling residual brine directly into the first solar pan

Water Recycling It is known that some brine and process water recycling is performed at the APC During the field investigation the Harza representative will search for other potential recycle opportunities Besides reducing water use, these recycling opportunities will minimize the amount of wastewater discharged from the facility

140

5.0 REFERENCES

The following documents were reviewed to prepare this report With the exception of reference 2, the essential components of each are included as an appendix to this report under a separate cover

1 Bainerman, Joel "Israel's Dead Sea Works Gets De-icer Marketing Agreement " Journal of Commerce and Commercial Vol 394, p 7A Dec 18 1991

2 Harris, George L Jordan, Its People, Its Society, Its Culture Chapter 15 ("Industrial Development") HRAF Press, New Haven, CT 1958

3 Jacobs, J J "Potassium Compounds " In Kirk-Othmer Encyclopedia of Chemical Technology, 2nd Edition, Vol 16, p 369-400 Interscience Publishers, New York, NY, 1968

4 Khaleq, Rania (Development Alternatives, Inc) Background Information on Jordan Potash Industry Personal Communication 1994

5 Shreve, R Norris and Joseph A Brink, Jr Chemical Process Industries, 4th Edition, p 262-273 McGraw-Hill, Inc , New York, NY, 1977

6 U S Department of Commerce--National Technical Information Service "Control Technology Study for the New Mexico Potash Industry " GCA Corp , Bedford, MA December 1978

7 U S Department of Commerce--National Technical Information Service "Industrial Process Profiles for Environmental Use Chapter 15 - Brine and Evaporite Chemicals Industry " Radian Corporation, Austin TX February 1977

8 U S Department of Commerce--National Technical Information Service "Source Assessment. Chemical and Fertilizer Mineral Industry, State-of-the-Art " Monsanto Research Corp , Dayton, OH June 1978

9 U S Environmental Protection Agency "Summary of Data Presented in the Background Document for Effluent Limitations Guidelines and Standards Mineral Mining and Processing Point Source Category " Office of Solid Waste, Mining Waste Section, Washington, D C 1993

141

FIGURES

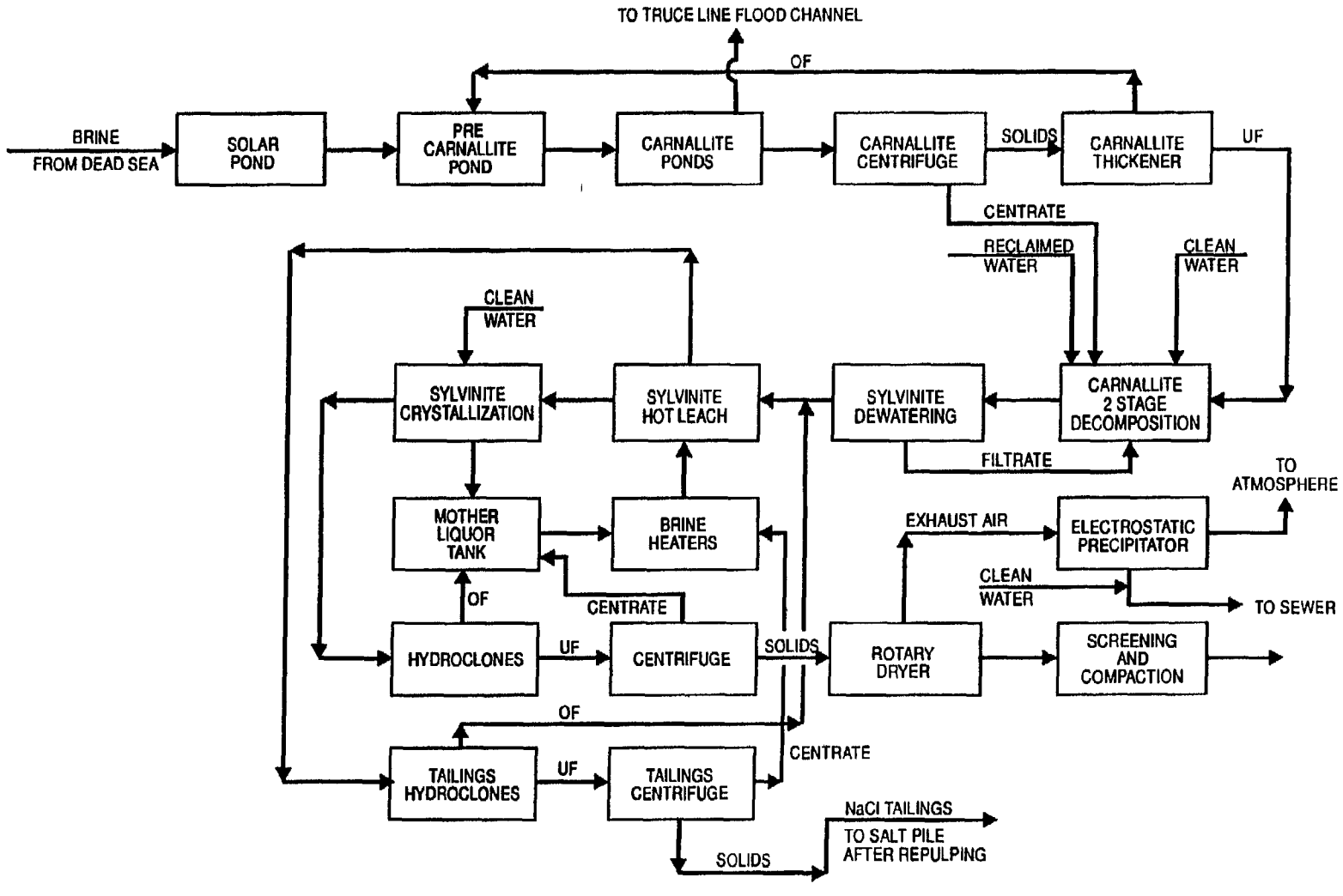

Figure 1
POTASH MANUFACTURING PROCESS BLOCK FLOW DIAGRAM
ARAB POTASH INDUSTRY LTD
Amman, Jordan

HARZA *Consulting Engineers and Scientists*

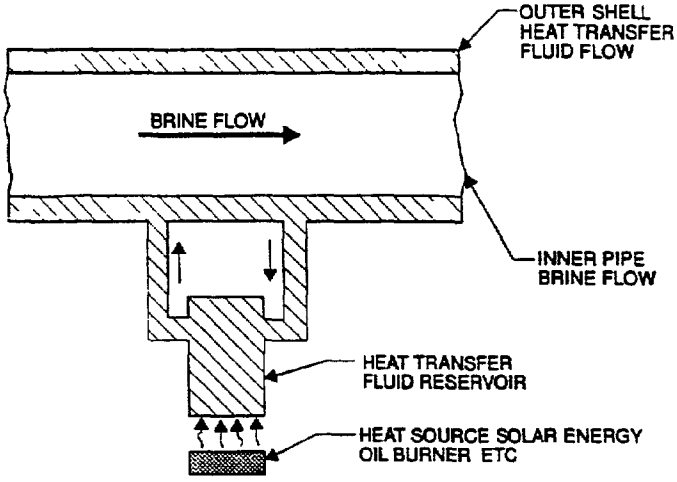

Figure 2 (A) CRYSTALLIZATION PREVENTION BY USING A HEATING JACKET TO MAINTAIN BRINE TEMPERATURE

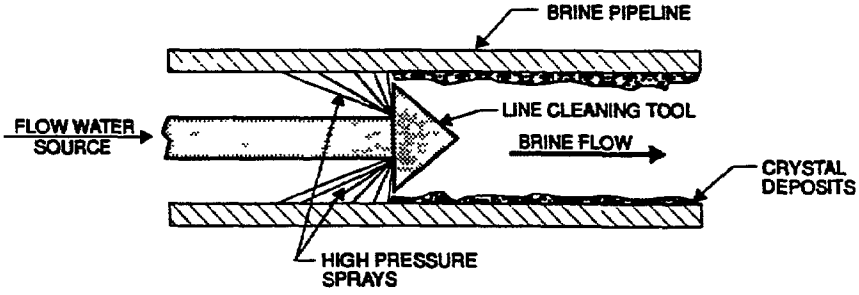

Figure 2 (B) CRYSTAL DEPOSIT REMOVAL USING A HIGH EFFICIENCY LINE-CLEANING TOOL

Figure 2

POTENTIAL WATER CONSERVATION TECHNIQUES

INDUSTRIAL WASTEWATER DISCHARGE PREVENTION
WATER QUALITY IMPROVEMENT AND CONSERVATION PROJECT
Amman Jordan

HARZA Consulting Engineers and Scientists

\proposal\jordan\jd tech cdr

APPENDIX A: Selected Process Diagrams for the United States Brine and Evaporite Chemicals Industry

HARZA
ENVIRONMENTAL
SERVICES INC.
COLLECTION

U.S. DEPARTMENT OF COMMERCE
National Technical Information Service

PB-281 482

Industrial Process Profiles for Environmental Use: Chapter 15 Brine and Evaporite Chemicals Industry

Radian Corp, Austin, Tex

Prepared for

Industrial Environmental Research Lab -Cincinnati, Ohio

Feb 77

146

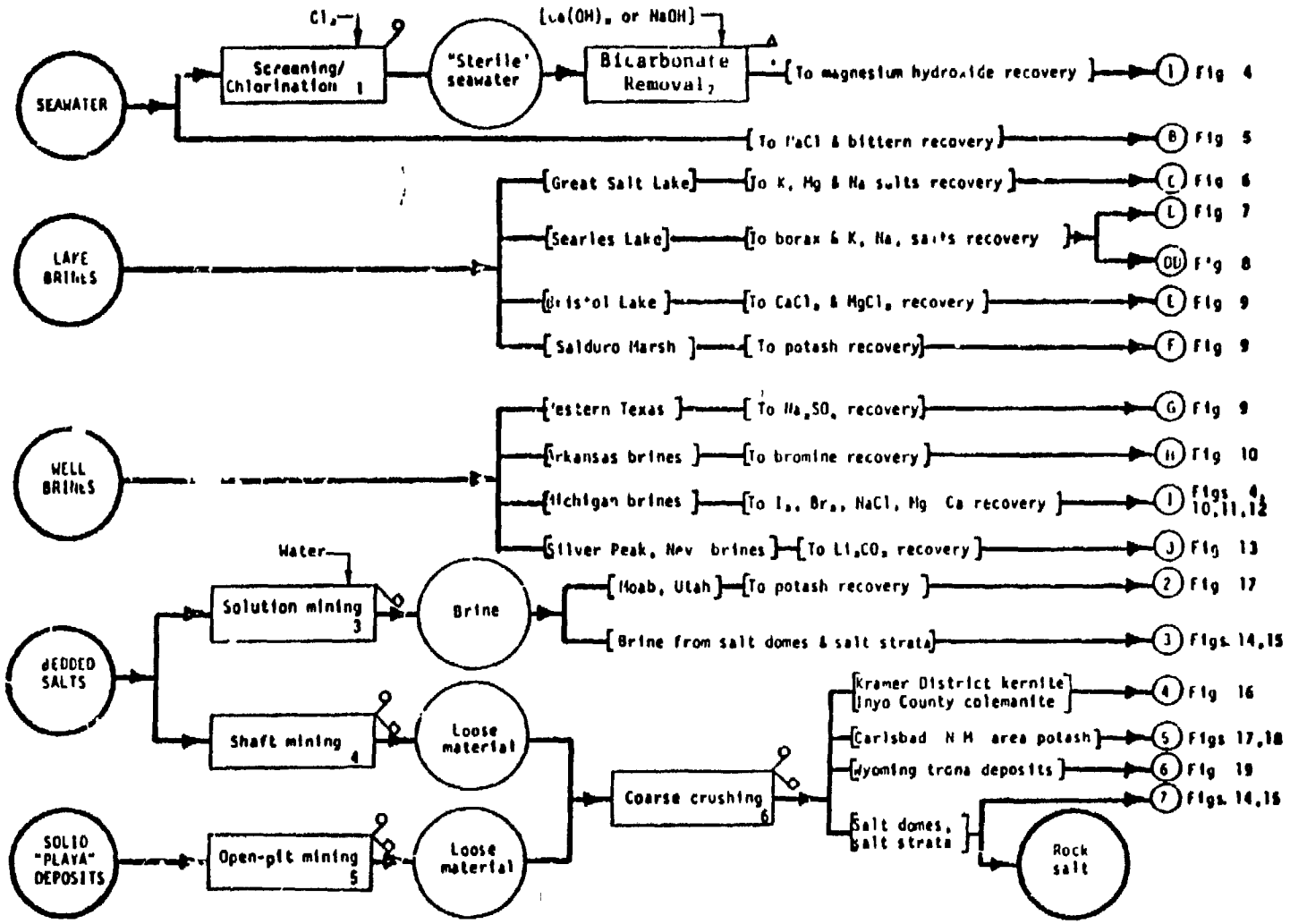

FIGURE 3 PRINCIPAL RAW MATERIAL SOURCES

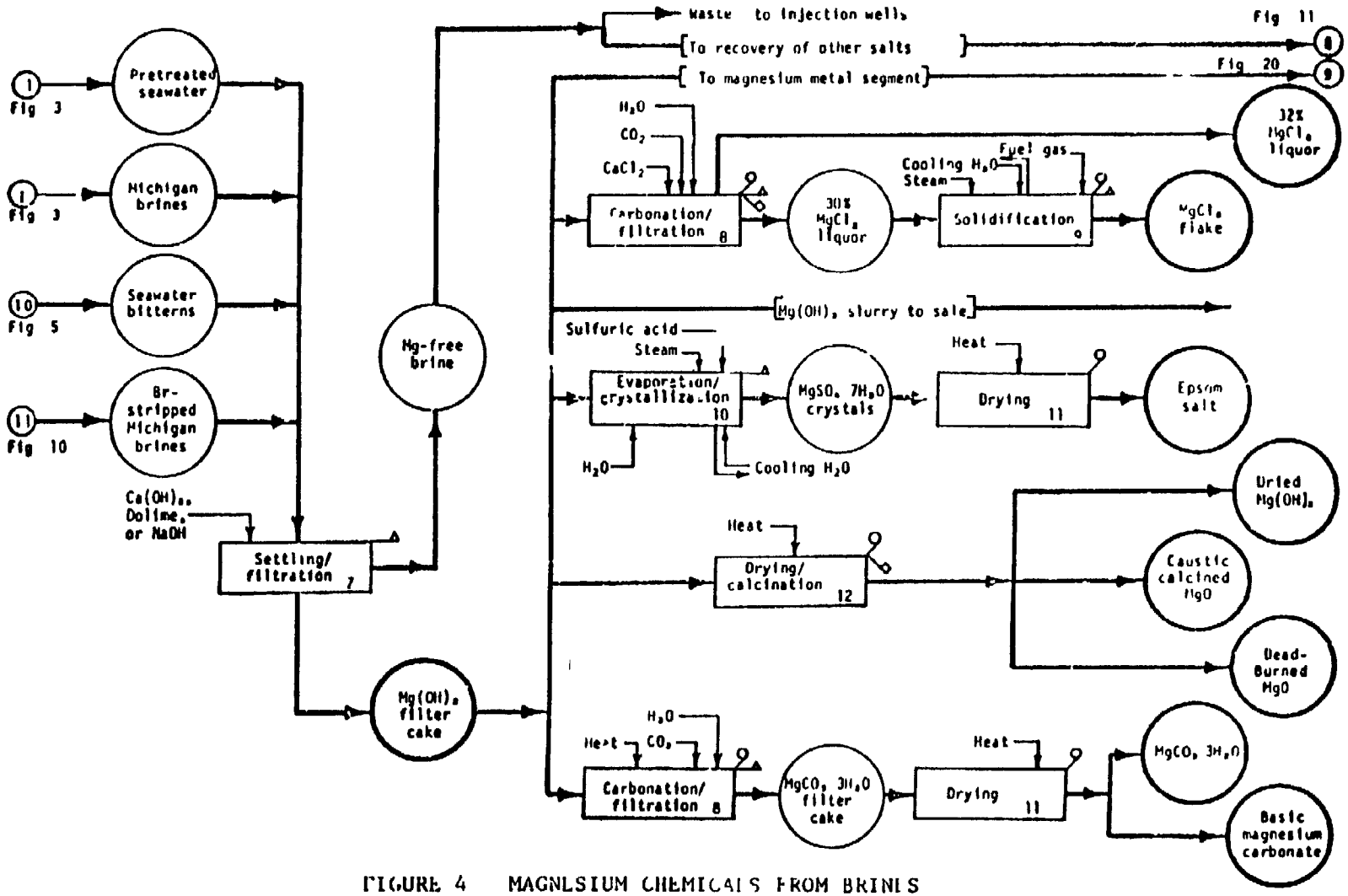

FIGURE 4 MAGNESIUM CHEMICALS FROM BRINES

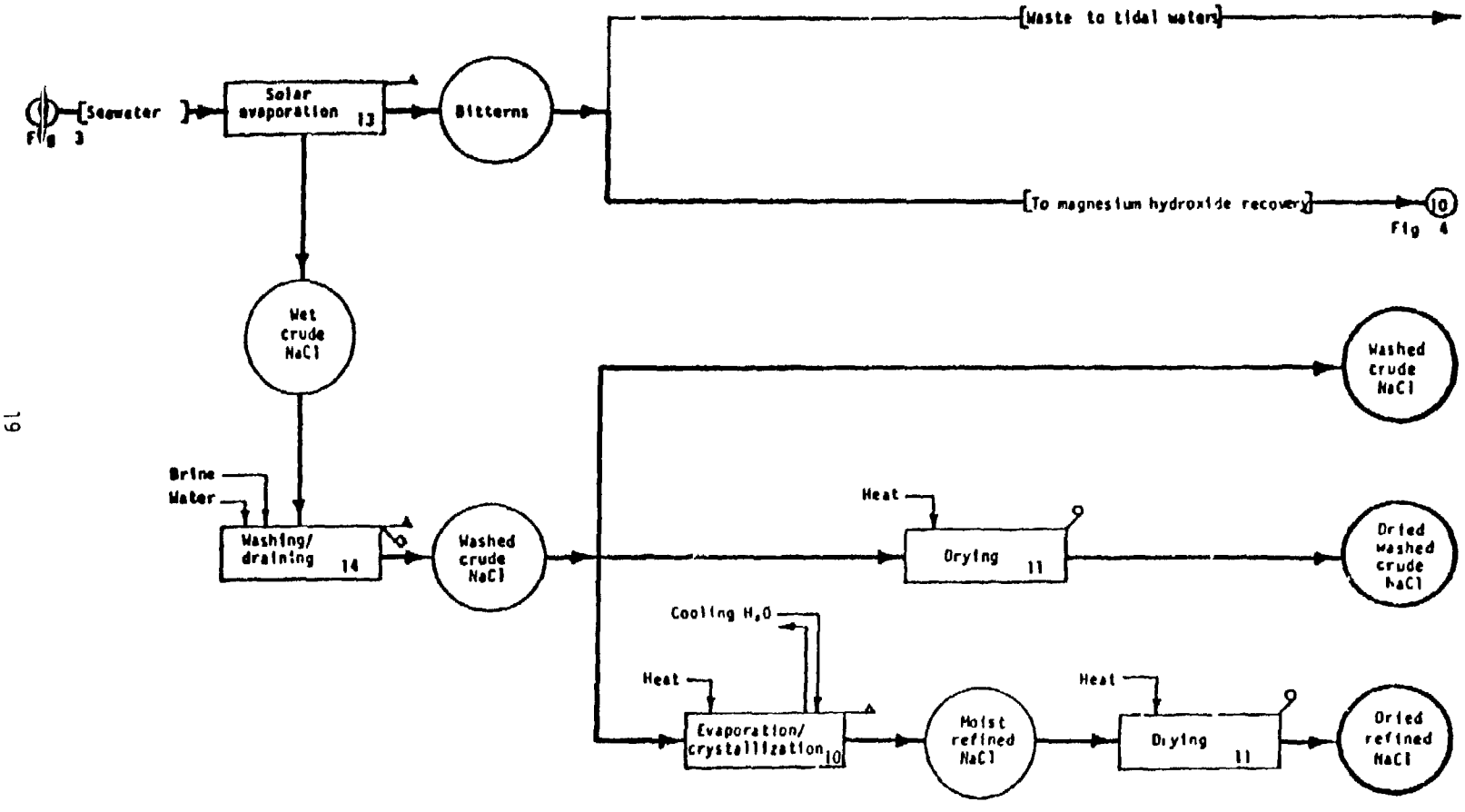

FIGURE 5 SODIUM CHLORIDE AND BITTERNS FROM SEAWATER

149

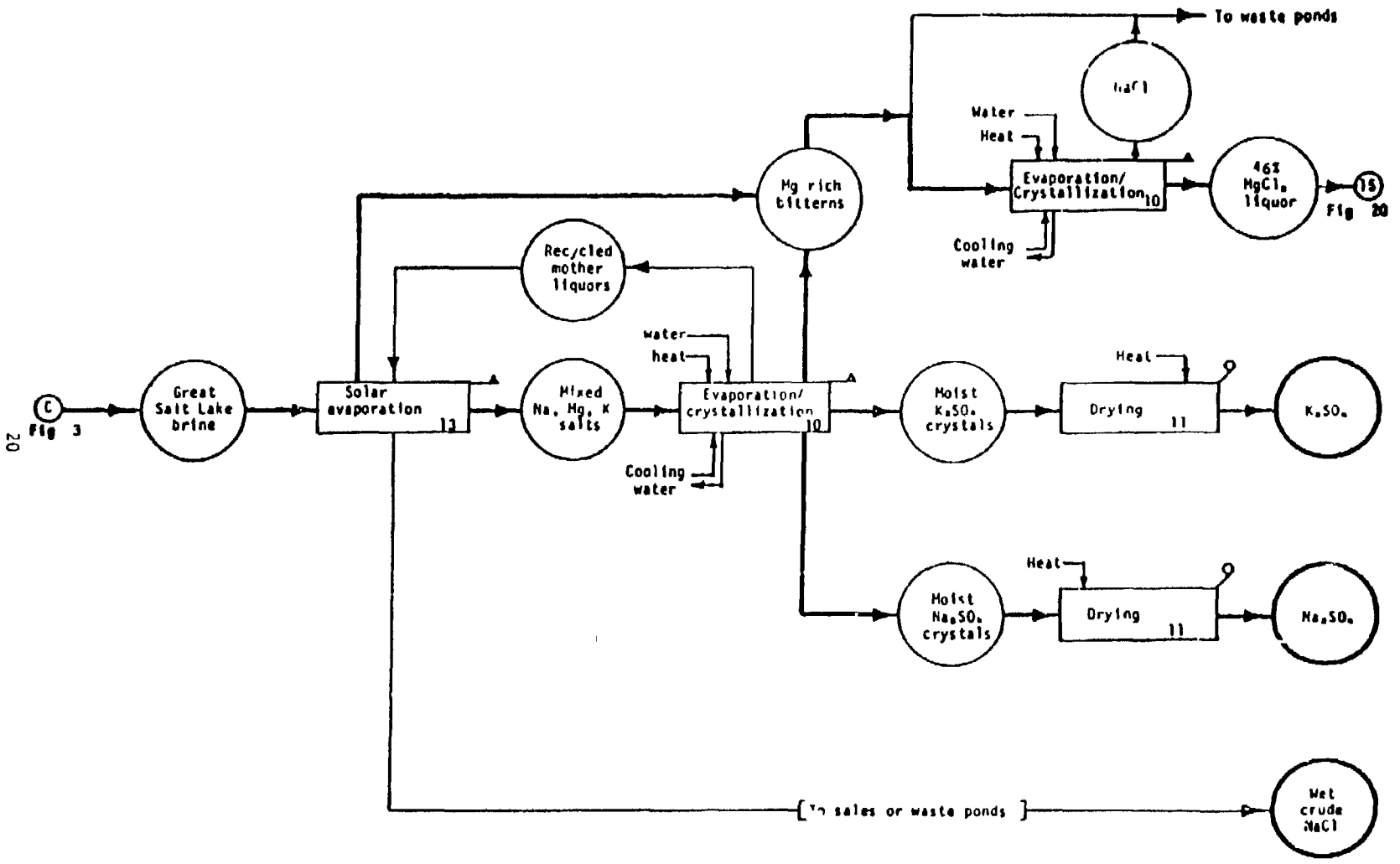

FIGURE 6 CHEMICALS FROM GREAT SALT LAKE

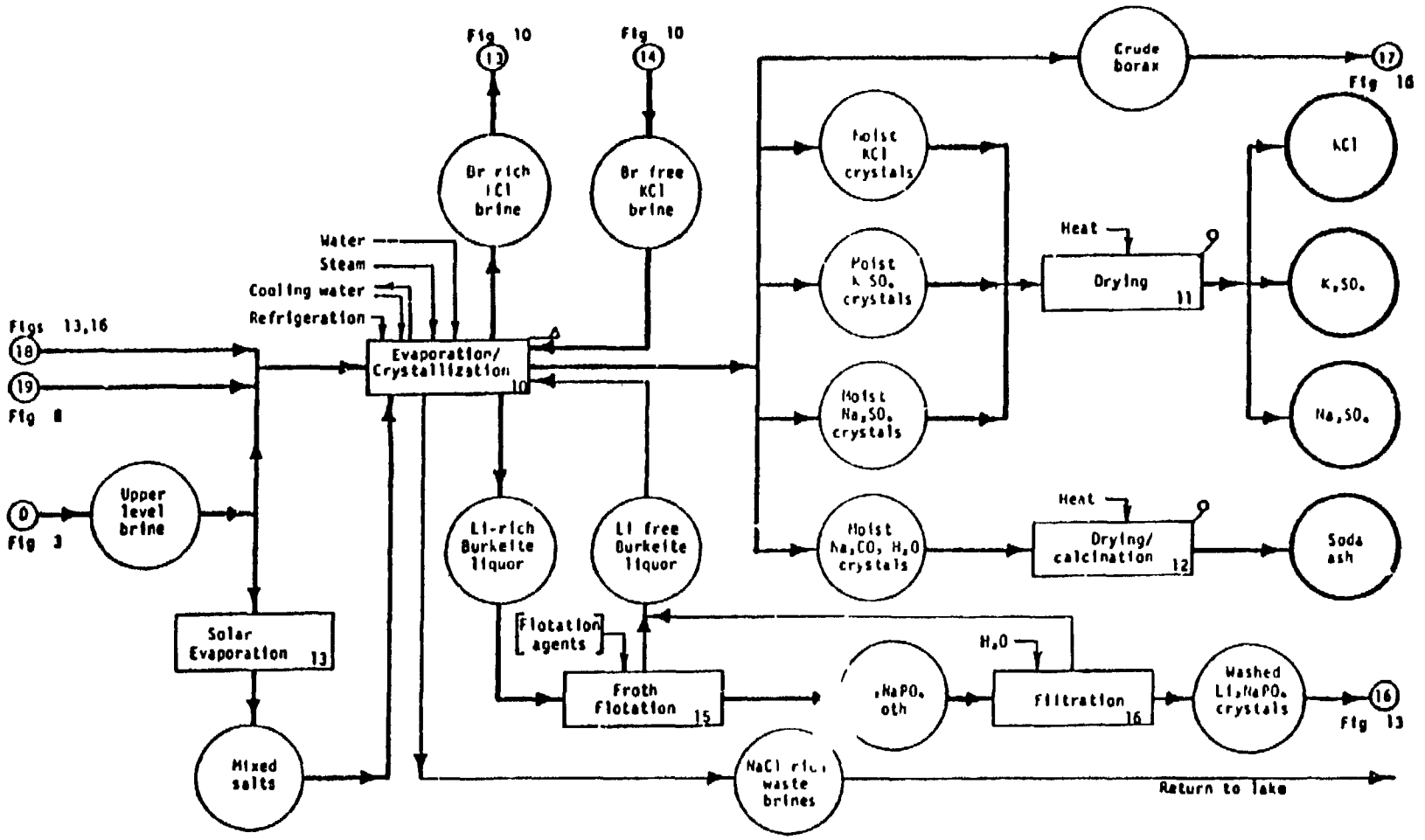

FIGURE 7 CHEMICALS FROM SEARLES LAKE UPPER LEVEL

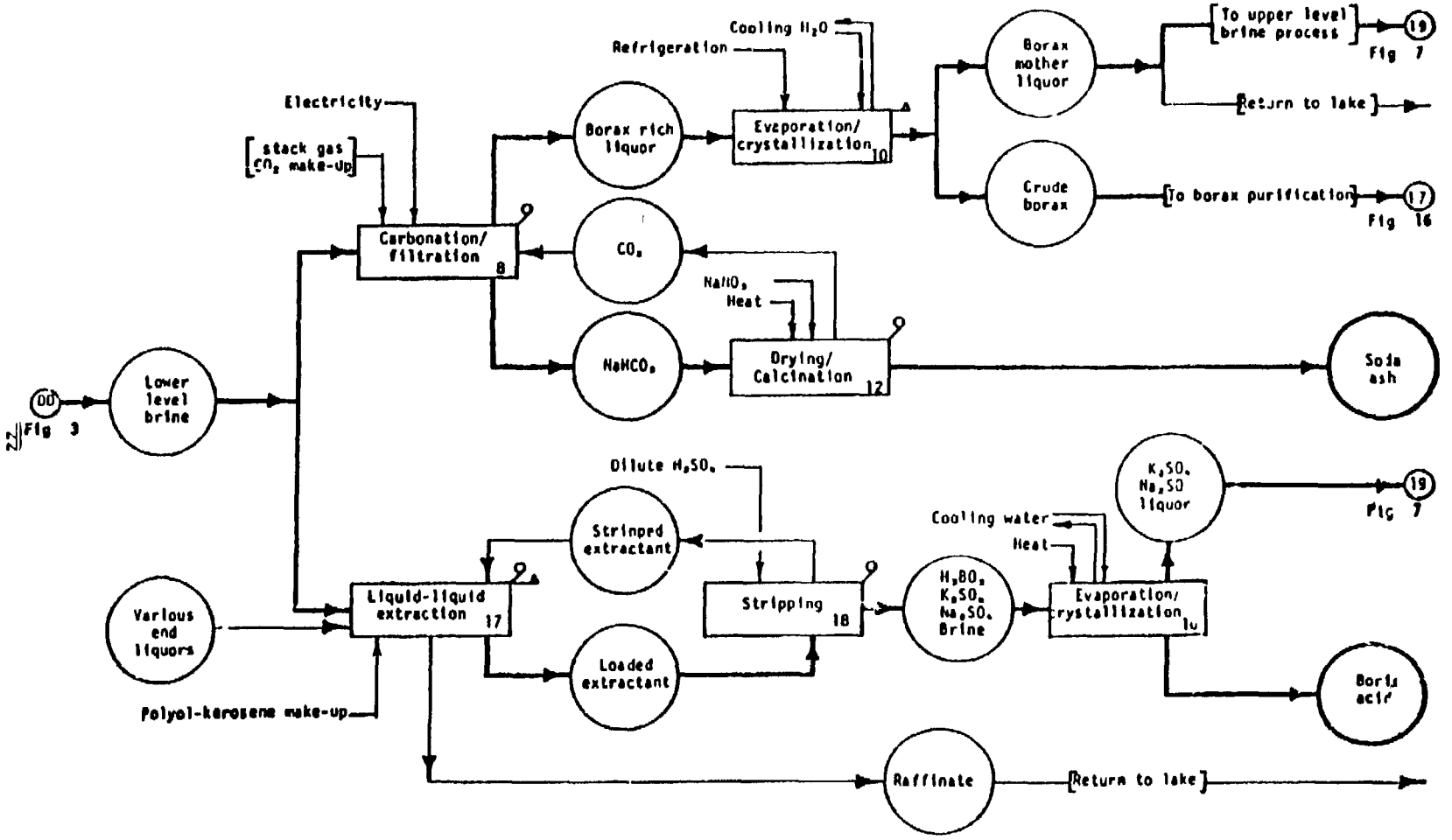

FIGURE 8 CHEMICALS FROM SEARLES LAKE LOWER LEVEL

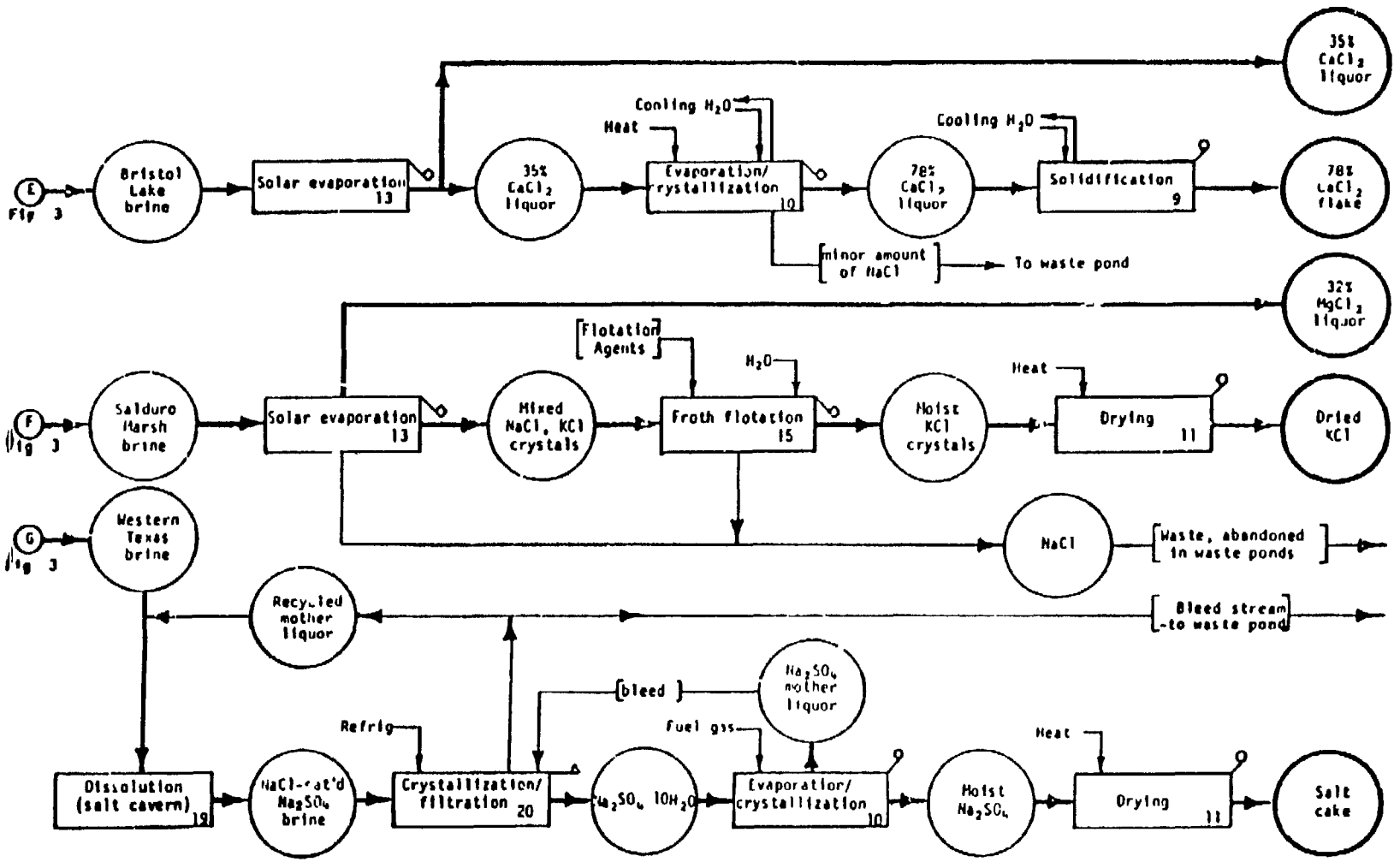

FIGURE 9 CHEMICALS FROM BRISTOL LAKE SALDURO MARSH AND TEXAS BRINES

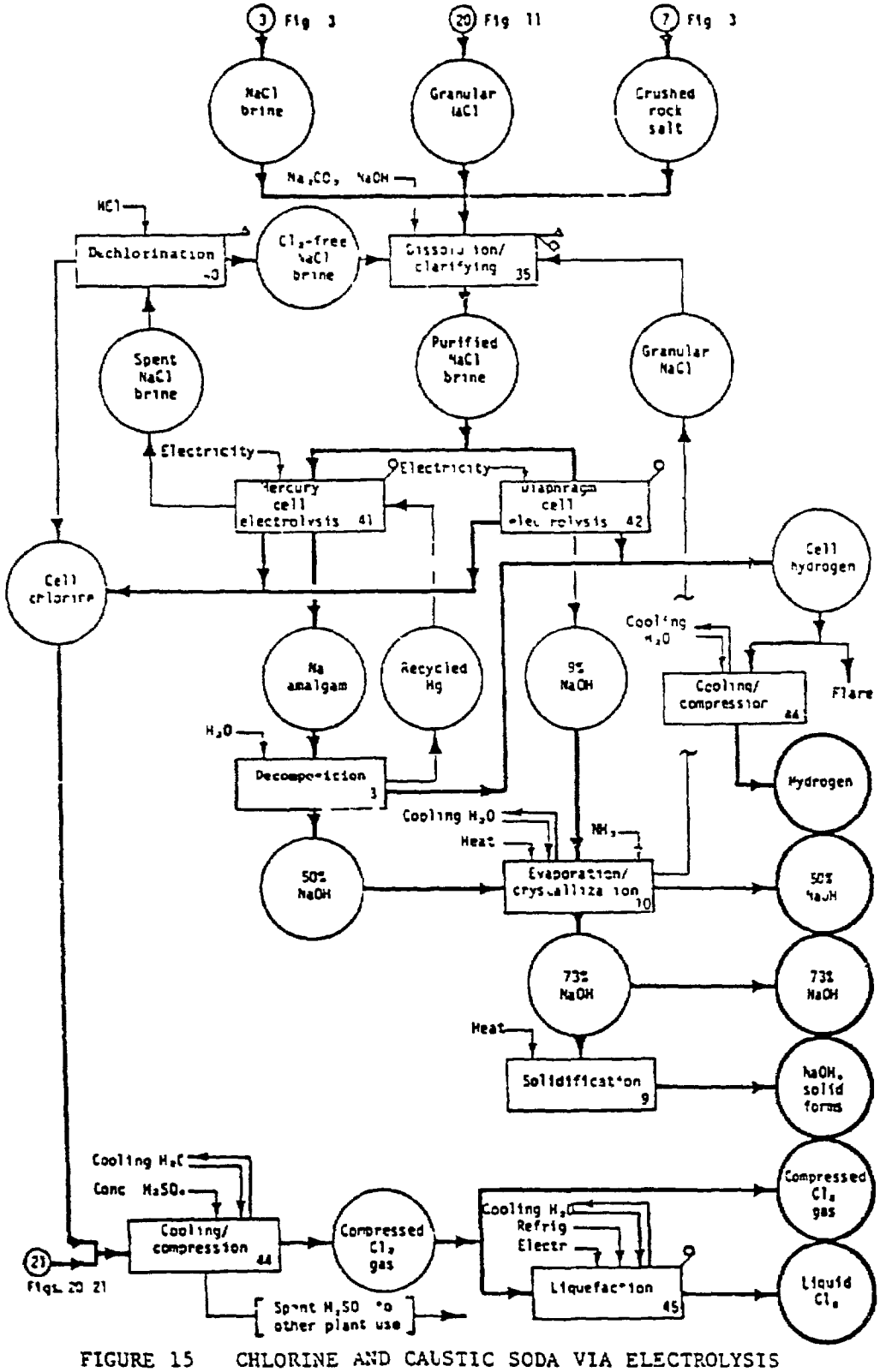

FIGURE 15 CHLORINE AND CAUSTIC SODA VIA ELECTROLYSIS

154

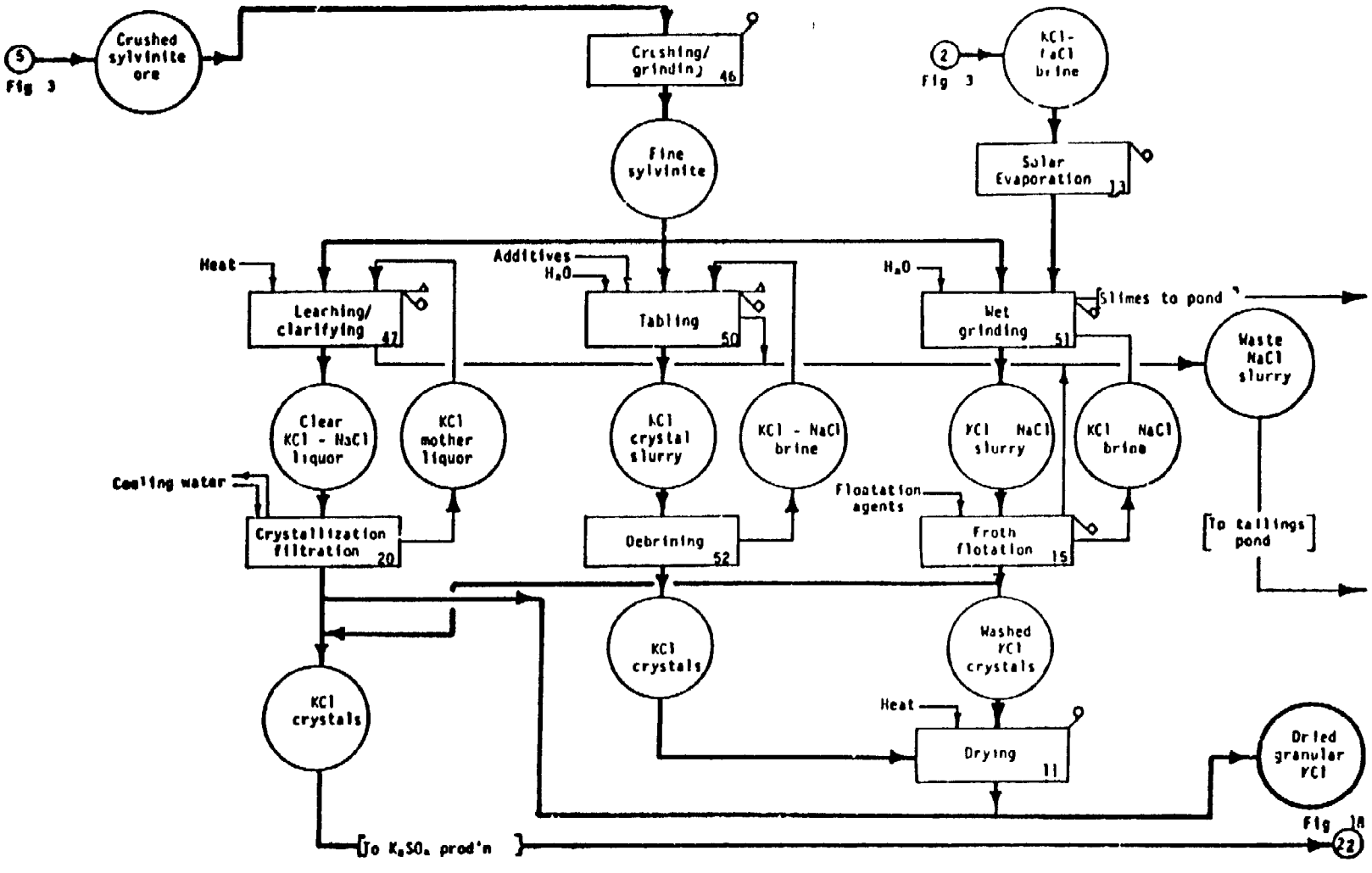

FIGURE 7 POTASSIUM CHLORIDE FROM SYLVINITE

155

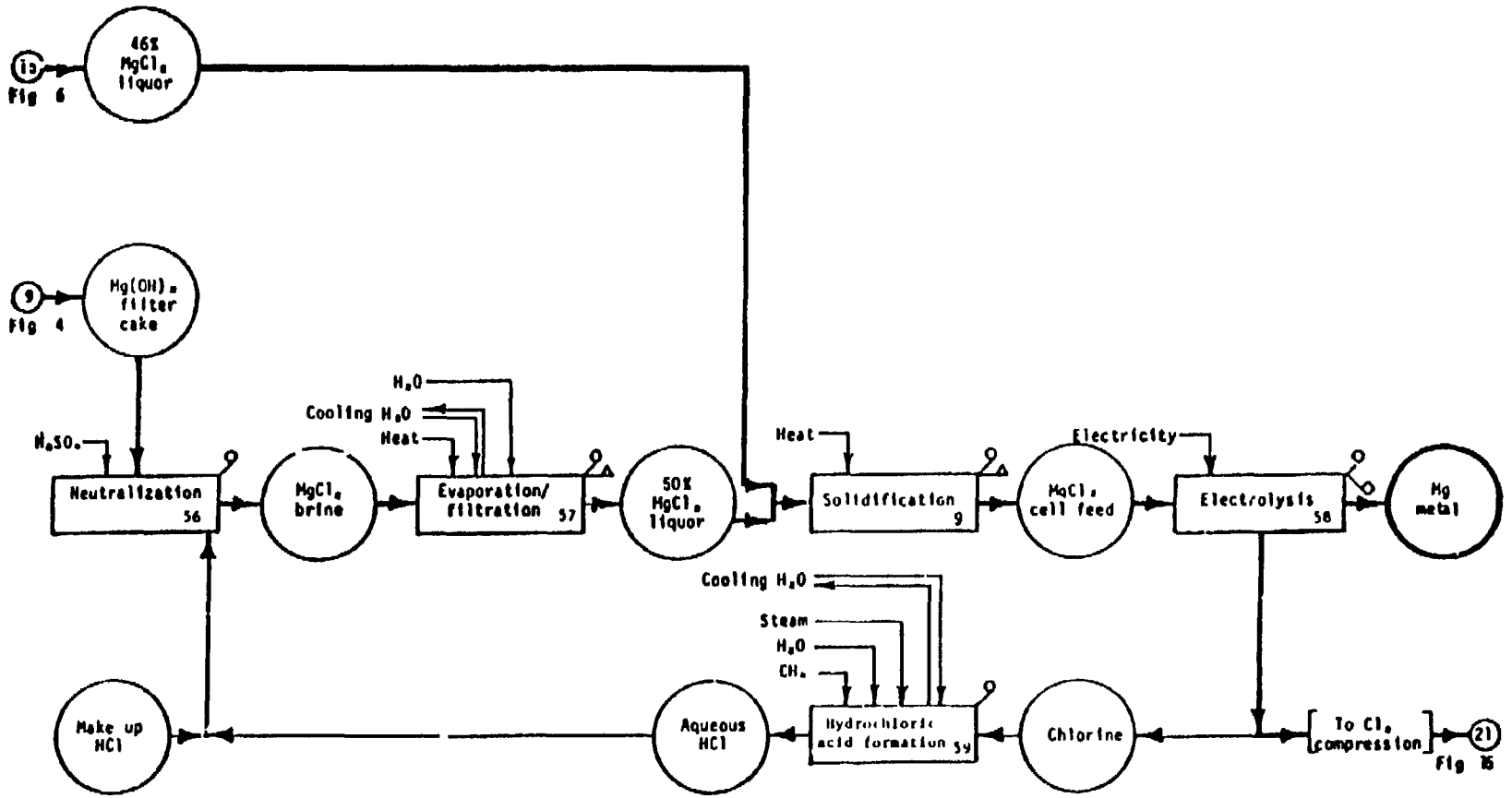

FIGURE 20 MAGNESIUM AND CHLORINE VIA $MgCl_2$ ELECTROLYSIS

156

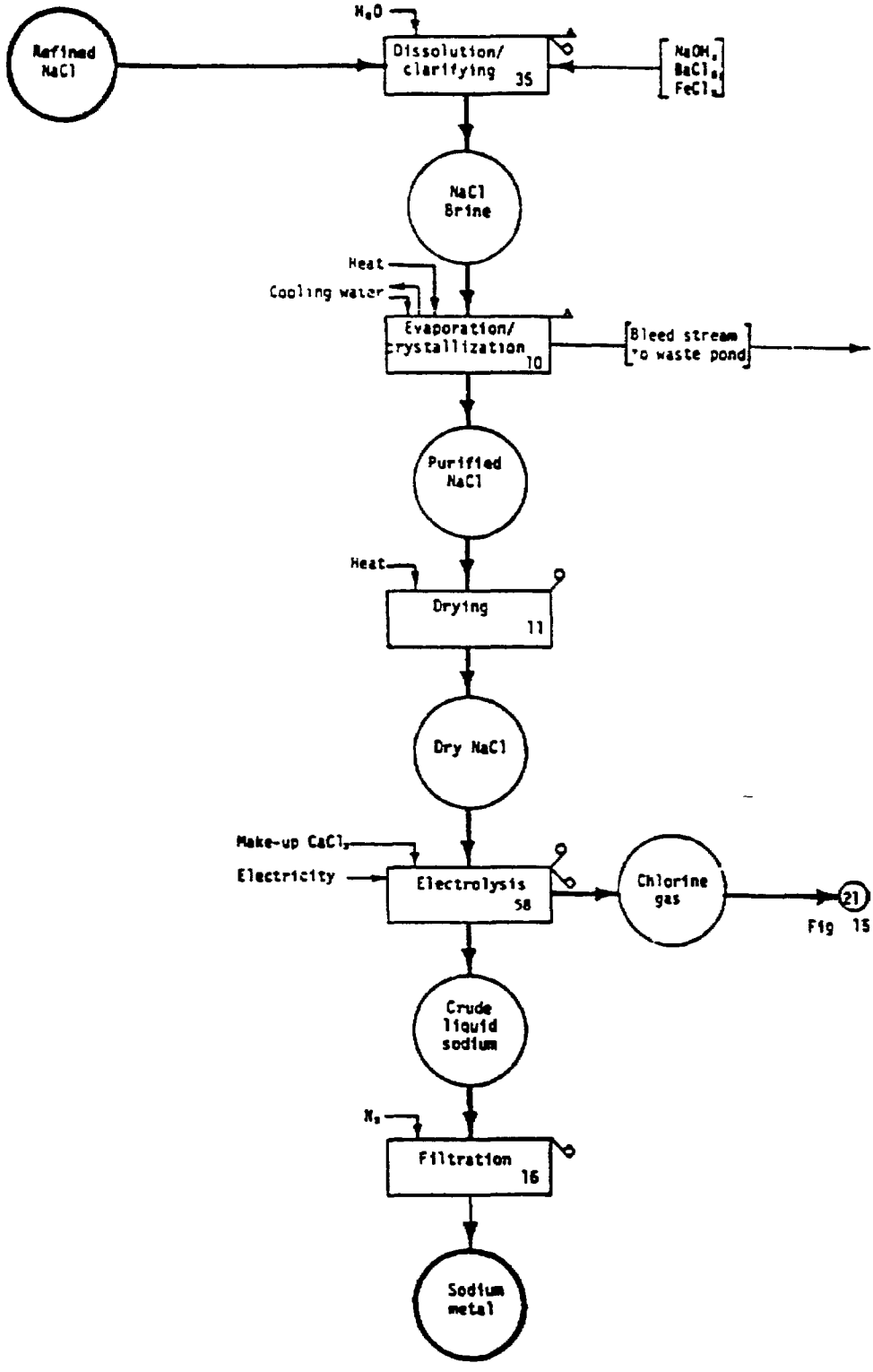

FIGURE 21 SODIUM METAL VIA DOWNS CELL

157

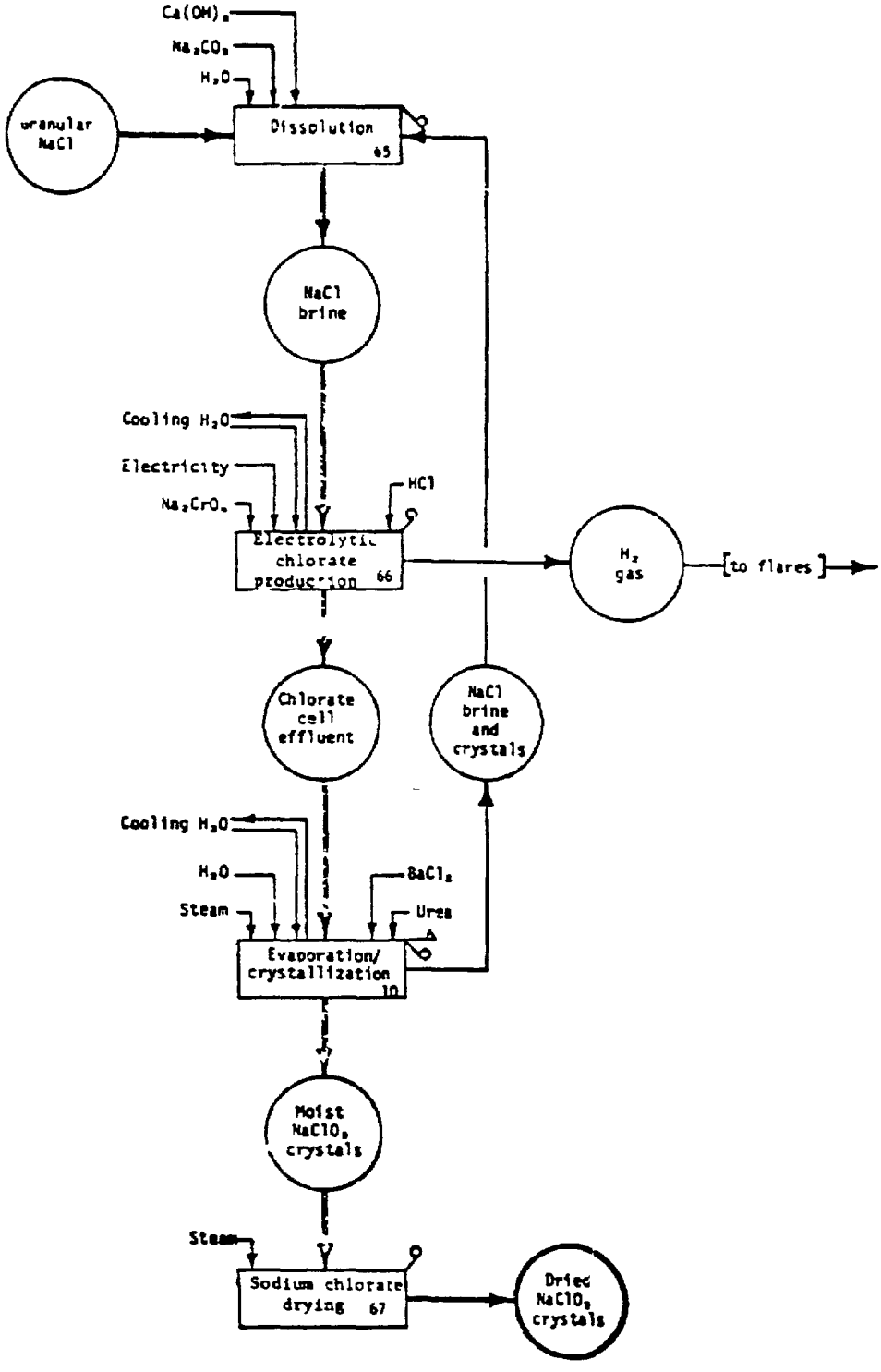

FIGURE 23 SODIUM CHLORATE VIA ELECTROLYSIS

158

APPENDIX E

APPLICABLE WATER QUALITY CRITERIA

BEST AVAILABLE COPY

APPLICABLE REGULATORY CRITERIA

Current Status of Environmental Regulations in Jordan

In order to assess the Arab Potash Company (APC) compliance with applicable Jordanian standards and regulations, it is of importance at this stage to present an overview of Jordan's environmental protection control laws standards and regulations Interestingly, Jordan has no comprehensive law to control water, air, and soil pollution However, a Jordanian Environment Act (JEA) was drafted two years ago to achieve the principle objectives mentioned in the National Environment Strategy (NES) for Jordan JEA is currently awaiting approval from the Parliament

In general, the nature of water pollution standards and regulations in Jordan vary according to sources Industrial wastewater discharges are regulated by the Jordanian standard specification number 202 (Table E-1) adopted in 1981 by the Department of Standards and Specifications (DSS) and revised in 1990 Standard 202 regulates industrial wastewater discharges to rivers wadis groundwater the sea and reuse for irrigation This standard covers 37 pollutant parameters and sets maximum allowable concentration limits of pollutants in the discharged industrial wastewater effluents Moreover, the standard also contains narrative conditions to protect public health, aquatic life, worker health, and groundwater quality The standard is not associated with a permitting mechanism and therefore is self-implementing

Drinking water quality is regulated by the Jordanian standard number 286 Tables E-2a - E-2e present quantitative requirements of pertinent characteristics including physical, chemical , radiation , and health related issues With regards to regulations related to the quality of treated domestic wastewater to be reused in irrigation, Jordan has neither standards nor guidelines However, it is a common practice to use the Food and Agriculture Organization (FAO) and World Health Organization (WHO) Guidelines as a reference Tables E-3 through E-5 are related to the quality of treated domestic wastewater effluents to be reused in irrigating agricultural crops The remaining tables E-6 - E-12 present the tolerance and sensitivity of crops to salinity and other specific ions like Sodium, Boron and Chloride These are adapted from the FAO Guidelines (1985) Treated domestic wastewater is regulated by the Jordanian Standard 893 (Table E-13) adopted in 1994 by DSS Regarding air pollution, Jordan does not have any existing standards or regulations to control air pollution

Regulations Applicable to the APC Discharges

During the course of conducting an environmental pollution prevention/ waste minimization audit of the APC, the audit team identified three continually discharged effluents Two of these discharges are industrial wastewater effluents disposed in the Dead Sea and the Truce Line Flood Channel

These effluents correspond to wastewaters produced from the intake pumps packings and line flushing and wastewater generated through facility drains, washings, and overflows

The third wastewater discharge, however, originates from the Potash Township wastewater treatment plant effluent This effluent is discharged into an unnamed neighboring wadi The Township administration has no monitoring program instituted and therefore no analyses were performed on the effluent since start-up The sludge produced in the treatment facility is being hauled and buried in the lisan area near The Dead Sea Sludge generated during the course of municipal or industrial wastewater treatment has no detailed standards regulating its disposal

Pertinent Jordanian standards regulating disposition into the Flood Channel and the Dead Sea are governed by the Jordanian standard 202 discussed before However, it is worth noting that the most relevant parameter in this case (disposition into the Sea) is the total dissolved solids (TDS) TDS is not defined by the Jordanian standard 202 Similarly regulations to control and prevent illicit disposal to storm sewers, underground injection, or marine dumping do not exist

It is highly recommended that APC institutes a monitoring program in order to test for the quality of their wastewater effluents This action, if adopted, will enable APC to be prepared when the new JEA will be passed

Table F 1

Summary of requirements of Jordan Standard 202/1991 for disposal of industrial effluents

Parameter	Maximum Allowable Limit, (mg/l)+			
	Disposal To			
	Wadis & Rivers	Sea	Groundwater Recharge	Reuse for Irrigation**
BOD5	50M		50M	
COD	150M	200	150M	
DO	1*	5*	1*	1*
TDS	3000(1)		1500 (1)	2000 (2)
TSS	50			100 (3)
pH (su)	6 5 9 0	5 5 9 0	6 5-9 0	6 5 8 4
Color (unit)	15	75	15	
TC	-	4	-	
FOG	5	10	Absent	5
Phenol	0 002	1	0 002	0 002
MBAS	25		15	
NO3-N	12 (4)		12 (4)	30
NH3	5	12	5	5
T-N		125		50
PO4-P	15			
Cl	500		500	350 (3)
SO4	500		500	400
F	1 5		1 5	
HCO3				500
Na		-	400	
Mg		-		
Ca				
SAR				9
Al	5		0 3	5
As	0 05	0 1	0 05	0 1
B	1		1	1 (5)
Cr	0 1	0 3	0 05	0 1
Cu	2	0 1	2	0 2
Fe	1	2	1	5
Mn	0 2	0 2	0 2	0 2
Ni	0 2	0 02	0 1	0 2
Pb	0 1	0 1	0 1	1
Se	0 02	0 02	0 05	0 02
Cd	0 01	0 07	0 02	0 01
Zn	15		15	2
CN	0 1	1	0 1	0 1
Hg	0 001	0 001	0 001	0 001
TCC MPN/100ml		5000		-
TFCC MPN/100ml	1000(6)		1000 (6)	1000 (6)
Nematodes	< 1	-	-	< 1

(+) All units are in mg/l except where noted
(*) Minimum value.
(**) Depends upon type and quantity of crops irrigation methods soil type climate & groundwater in the area concerned
( ) Undetermined
(M) Monthly average

Notes
(1) TDS allowable limit is subject to the TDS concentration in the water supply and the water basin affectd
(2) Allowable limits of wastewater reuse determine the degree of restriction (none slight to moderate or severe)
(3) Method of irrigation is determined by wastewater quality being used
(4) Nitrate concentrations allowed are determined by its concentrations in the affected water basin
(5) Could reach 3 mg/l
(6) Geometric mean

Table E-2a
Jordanian Drinking Water Standards
A Physical characterstics

Parameter	Permissible Limit	Max allowable conc in case no better source is available
Taste	aesthetically acceptable	-
Odor	aesthetically acceptable	
Color	10 units	15 units
Turbidity	1 unit (JCU)	5 units
pH	6.5 < pH < 9	
Temperature	8 - 25 c	

Table E-2b

Jordanian Drinking Water Standards

B Chemical Charecterstics

Parameter	**Max Allowable Conc mg/l**
Pb	0 05
Se	0 01
As	0 05
Cr	0 05
CN	0 1
Cd	0 005
Hg	0 001
Sb	0 01
Ag	0 01

Table E-2c
Jordanian Drinking Water Standards
C Health related

Parameter	Permissible Limit mg/l	Max allowable conc in case no better source is avialable	Effects within max allowable limits
TDS	500	1500	aesthetic
TH(CaCO3)	100	500	aesthetic
ABS	0 5	1	indicator
Al	0 2	0 3	aesthetic
Fe	0 3	1	aesthetic
Mn	0 1	0 2	aesthetic
Cu	1	1 5	aesthetic
Zn	5	15	aesthetic
Na	200	400	aesthetic
Ni	0 05	0 1	health
Cl	200	500	aesthetic
F	1	1 5	health
SO4	200	500	aesthetic
NO3	45	70	health

Table E-2d

Jordanian Drinking Water Standards
D Radiation

Parameter	Maximum limit Bq/l
Alpha-emitters (except for Radon)	0.1
Beta-emitters	1

Table E-2e

Jordanian Drinking Water Standards
E Organic pollutants*

Parameter	Max Permissible Conc mg/l
A) Chlorinted Hydrocarbons	
Endrin	0 0002
Lindane	0 004
Methoxychlor	0 1
Toxaphene	0 005
B) Chlorophenoxys	
2,4-D	0 1
2,4,5-TP (Trichlorophenoxy propionic acid)	0 01

* Other organic pollutants should not exceed the max allowable limit set by WHO

Table 1 3

Guidelines for interpretations of water quality for irrigation (1)

BEST AVAILABLE COPY

Potential irrigation problems	Units	Degree of restriction on use: None	Slight to moderate	Severe
Salinity (affects crop water availability) (2)				
EC_w (or)	dS/m	< 0 7	0 7 3 0	> 3 0
TDS	mg/l	< 450	450 2000	> 2000
Infiltration (affects infiltration rate of water into the soil. Evaluate using (EC_w and SAR together) (3)				
SAR = 0-3 and EC_w	=	> 0 7	0 7 0 2	< 0 2
= 3-6	=	> 1 _	2 0 3	< 0 3
= 6-12	=	> 1 9	1 9 0 5	< 0 5
= 12 20	=	> 2 9	2 9 1 3	< 1 3
= 20-40	=	> 5 0	5 0 2 9	< 2 9
Specific ion toxicity (affects sensitive crops)				
Sodium (Na) (4)				
Surface irrigation	SAR	< 3	3 9	> 9
Sprinkler irrigation	me/l	< 3	> 3	
Chloride (Cl) (4)				
Surface irrigation	me/l	< 4	4 10	> 10
Sprinkler irrigation	me/l	< 3	> 3	
Boron (B) (5)	mg/l	< 0 7	0 7 3 0	> 3 0
Trace elements (see table E4)				
Miscellaneous effects (affects susceptible crops)				
Nitrogen (NO_3-N) (6)	mg/l	<5	30	> 30
Bicarbonate (HCO_3 Overhead sprinkling only)	me/l	< 1 _	8 5	> 8 5
pH			Normal range 6 5 8 4	

(1) Adapted from University of California Committee of Consultants 1974

(2) ECw means electrical conductivity a measure of the water salinity reported in deciSiemens per metre at 25C^0 (dS/m) or in units millimhos per centimeter (mmho/cm) Both are equivalent TDS means total dissolved solids reported in milligrams per liter (mg/L)

(3) SAR means sodium adsorption ratio SAR is sometimes reported by the symbol RNa At a given SAR infiltration rate increase as water salinity increases Evaluate the potential infiltration problem by SAR as modified by ECw

(4) For surface irrigation, most tree crops and woody plants are sensitive to sodium and chloride use the values shown Most annual crops are not sensitive With overhead sprinkler irrigation and low humidity (<30 percent) sodium and chloride may be absorbed through the leaves of sensitive crops

(5) For boron tolerances see Tables 16 and 17

(6) NO_3-N means nitrate nitrogen reported in terms of elemental nitrogen (NH_4-N and Organic N should be included when wastewater is being tested)

Assumptions in the Guidelines

The water quality guidelines in Table 1 are intended to cover the wide range of conditions encountered in irrigated agriculture Several basic assumptions have been used to define their range of usability If the water is used under greatly different conditions the guidelines may need to be adjusted Wide deveations from the assumptions might result in wrong judgements on the usability of a particular water supply especially if it is a borderline case Where sufficient experience field trials research or observations are available the guidelines may be modified to fit local conditions more closely

The basic assumptions in the guidelines are.

Yield Potential. Full production capability of all crops without the use of special practices is assumed when the guidelines indicate no restrictions on use A "restriction on use indicates that there many be a limitation in choice of crop or special management may be needed to maintain full production capability A restriction on use does not indicate that the water is unsuitable for use.

Site Conditions. Soil texture ranges from sandy loam to clay loam with good internal drainage. The climate is semi-arid to arid and rainfall is low Rainfall does not play a significant role in meeting crop water demand or leaching requirement. (In a monsoon climate or areas where precipitation is high for part or all of the year the guideline restrictions are too severe. Under the higher rainfall situations infiltrated water from rainfall is effective in meeting all or part of the leaching requirement.) Drainage is assumed to be good with no uncontrolled shallow water table present within 2 metres of the surface.

Methods and Timing of Irrigations. Normal surface or sprinkler irrigation methods are used Water s applied infrequently as needed and the crop utilizes a considerable portion of the available stored soil water (50 percent or more) before the next irrigation At least 15 percent of the applied water percolates below the root zone (leaching fraction [LF] ≥ 15 percent) The guidelines are too restrictive for specialized irrigation methods such as localized drip irrigation which results in near daily or frequent irrigations but are applicable for subsurface irrigation if surface applied leaching satisfies the leaching requirements

Water Uptake by Crops. Different crops have different water uptake patterns but all take water from wherever it is most readily available within the rooting depth On average about 40 percent is assumed to be taken from the upper quarter of the rooting depth 30 percent quarter 20 percent from the third quarter and 10 percent from the lowest quarter Each irrigation leaches the upper root zone and maintains it at a relatively low salinity Salinity increases with depth and is greatest in the lower part of the root zone The average salinity of the soil water is three times that of the applied water and is representative of the average root zone salinity to which the crop responds These conditions result from a leaching fraction of 15 20 percent and irrigations that are timed to keep the crop adequately watered at all times

Salts leached from the upper root zone accumulate to some extent in the lower part but a salt balance is achieved as salts are moved below the root zone by sufficient leaching. The higher salinity in the lower root zone becomes less important if adequate moisture is maintained in the upper more active part of the root zone and long term leaching is accomplished

Restriction on Use. The Restriction on Use shown in Table 1 is divided into three degrees of severity none slight to moderate, and severe The divisions are somewhat arbitrary since change occurs gradually and there is no clear-cut breaking point. A change of 10 to 20 percent above or below a guideline value has little significance if considered in proper perspective with other factors affecting yield Field studies research trials and observations have led to these divisions but management skill of the water user can alter them Values shown are applicable under normal field conditions prevailing in most irrigated areas in the arid and semi arid regions of the world

BEST AVAILABLE COPY

Table E 4
Recommended maximum concentrations of
trace elements in irrigation water (1)

Element	Recommended maximum concentration(2) (mg/L)	Remarks
Al (aluminium)	> 0	Can cause non productivity in acid soils (pH < 5 5) but more alkaline soils at pH > 7 0 will precipitate the ion and eliminate any toxicity
As (arsenic)	0 10	Toxicity to plants varies widely ranging from 12 mg/L for Sudan grass to less than 0 05 mg/L for rice.
Be (beryllium)	0 10	Toxicity to plants varies widly raning from 5 mg/L for kale to 0 5 mg/L for bush beans
Cd (cadmium)	0 01	Toxic to beans beets and turnips at concentrations as low as 0 1 mg/L in nutrient solutions Conservative limits recommended due to its potential for accumulation in plants and soils to concentrations that may be harmful to humans
Co (cobalt)	0 05	Toxic to tomato plants at 0 1 mg/L in nutrient solution Tends to be inactivated by neutral and alkaline soils
Cr (chromium)	0 10	Not generally recognized as an essential growth element Conservative limits recommended due to lack of knowledge on its toxicity to plants
Cu (copper)	0 20	Toxic to a number of plants at 0 1 1 0 mg/L in nutrient solutions
F (fluoride)	1 0	Inactivated by neutral and alkaline soils
Fe (iron)	5 0	Not toxic to plants in aerated soils but can contribute to soil acidification and loss of availability of essential phosphorus and molybdenum Overhead sprinkling may result in unsightly deposits on plants equipment and buildings
Li (lithium)	2.5	Tolerated by most crops to 5 mg/L mobile in soil Toxic to citrus at low concentrations (<0 075 mg/L) Acts similarly to boron
Mn (manganeses)	0 20	Toxic to a number of crops at a few tenths to a few mg/L but usually only in acid soils
Mo (molybdenum	0 01	Not toxic to plants at normal concentrations in siol and water Can be toxic to livestock if forage is grown in siols with high concentrations of available molybdenum
Ni (nickel)	0 20	Toxic to a number of plants at 0 5 1 0mg/L reduced toxicity at neutral or alkaline pH
Pd (lead)	5 0	Can inhibit plant cell growth at very high concentrations
Se (selenium)	0 02	Toxic to plants at concentrations as low as 0 025 mg/L and toxic to livestock if forage is grown in soils with relatively high levels of added selenium An essential element to animals but in very low concentrations
Sn (tin)		
Ti (titanium)		Effectively excluded by plants specific tolerance unknown
W (tungsten)		
V (vanadium)	0 1	Toxic to many plants at relatively low concentrations
Zn (zinc)	2 0	Toxic to many plants atwidely varying concentrations reduced toxicity at pH > 6 0 and in fine textured or organic soils

1- Adapted from National Academy of Sciences (1972) and Pratt (1972)
2 The maximum concentration is based on a water application rate which is consistent with good irrigation practices (10000 m3/ha per years) If the water application rate greatly exceeds this the maximum concentrations should be adjusted downward accordingly No adjustment should be made for application rates lease than 10 000 m3/ha per year The values given are for water used on a continuous basis at one site.
Source FAO Guidelines R S Ayers & D w Westcot (1985)

BEST AVAILABLE COPY

Table F 5

Recommended microbiological quality guidelines for wastewater use in agriculture (a)

Category	Reuse conditions	Exposed group	Intestinal nematodes (b) (arithmetic mean no of eggs per litre (c))	Faecal coliforms (geometric mean no per 100ml) (c)	Wastewater treatment expected to achieve the required microbiological quality
A	Irrigation of crops likely to be eaten uncooked sports fields public parks (d)	Workers Consumer public	1	< 1000 (d)	A series of stabilization ponds designed to achieve the microbiological quality indicated or equivalent treatment
B	Irrigation of cereal crops industrial crops fodder crops, Pasture and trees (e)	Workers	<1	No standard recommended	Retention in stabilization ponds for 8 10 days or equivalent helminth and faecal coliform removal
C	Localized irrigation of crops in category B if exposure of workers and the public does not occur	None	Not applicable	Not applicable	Pretreatment as required by the irrigation technology, but not less than primary sedimentation

(a) In specific cases local epidemiological sociocultural and environmental factors should be taken into account and the guidelines modified accordingly

(b) Ascaris and Trichuris species and hookworms

(c) During the irrigation period

(d) A more stringent guideline (< 200 faecal coliforms per 100 ml) is appropriate for public lawns such as hotel lawns With which the public may come into direct contact

(e) In the case of fruit trees irrigation should cease two weeks before fruit is picked and no fruit should be picked off the ground Sprinkler irrigation should not be used

Source Scientific group on health aspects of use of treated wastewater for agricultural and aquaculture W H O Geneva 18 23 Nov 1987

BEST AVAILABLE COPY

able 1 6

Chloride tolerance of some fruit crop cultivars and rootstocks (a)

Crop	Rootstock or cultivar	Maximum permissible Cl in water without leaf injury (b),(c) (mg/L)
	Rootstocks	
Avocado (Persea americana)	West indian	180
	Guatemalan	145
	Mexican	110
Citrus (Citrus spp)	Sunki mandarin, grapefruit Cleopatra mandarin Rangpur lime	600
	Sampson tangelo rough lemon sour orange Ponkan mandarin	355
	Citrumelo 4475 trifolate orange Cuban shaddock Calamondin Sweet orange Savage citrange Rusk citrange Troyer citrange	250
Grape (Vitis spp)	Salt Creek 1613 3	960
	Dog ridge	710
Stone fruit (Prunus spp)	Marianna	600
	Lovell Shalil	250
	Yunnan	180
	Cultivars	
Berries (Rubus spp)	Boysenberry	250
	Olallie blackberry	250
	Indian Summer raspberry	110
Grape (vitis spp)	Thompson seedless Perlette	460
	Cardinal black rose	250
Strawberry (Fragaria spp)	Lassen	180
	Shasta	110

(a) Data are adapted from Haas (13)
(b) For some crops the concentrations given may exceed the overall salinity tolerance of that crop and cause some yield reduction before chloride ion toxicities Values given are for the maximum concentration in the irrigation water The values were derived from saturation extract data (ECe) by the following relationship saturation extraction concentration = 1.5 water concentration
(c) The maximum permissible values apply only to surface irrigated crops Sprinkler irrigation may cause excessive leaf burn at values far below these (see Table 3-10)

Source FAO Guidelines R S Ayers & D W Westcot (1985)

BEST AVAILABLE COPY

Table E 7

GUIDLINES FOR INTERPRETING LABORATORY DATA ON WATER SUITABILITY FOR GRAPES

Potential Irrigation Problem	Units	Degree of Restriction on Use		
		None	Slight to Moderate	Severe2
Salinity [3] *(affects water availability to crops)*				
EC_w	dS/m	< 1	1 0 - 2 7	> 2 7
Toxicity *(Specific ions which affect growth of crop)*				
Sodium (Na^+)[4]	me/l	< 20	-	-
Chloride (Cl^-)[4]	me/l	< 4	4 - 15	> 15
Boron (B)	mg/l	< 1	1 - 3	> 3
Miscellaneous				
Bicarbonate (HCO_3)[5]	me/l	< 1 5	1 5 - 7 5	> 7 5
Nitrate-nitrogen (NO_3-N)	mg/l	< 5	5 - 30	> 30

1 Adapted from Neja et al 1978
2 Special management practices and favorable soil conditions are required for successful production
3 Assumes that rainfall and extra water applied owing to inefficiencies of normal irrigation will supply the crop need plus about 15 percent extra for salinity control
4 With overhead sprinkler irrigation sodium or chloride in excess of 3 me/l under extreme drying conditions may result in excessive leaf absorption leaf burn and crop damage If overhead sprinklers are used for cooling by frequent on off cycling damage may occur even at lower concentrations
5 Bicarbonate (HCO3) in water applied by overhead sprinklers may cause white deposits on fruit and leaves which reduces market acceptability but is not toxic to the plant

Table E-8
PELATIVE SALT TOLERANCE OF VARIOUS CROPS AT GERMINATION[1]

Crop		50 percent Emergence reduction (ECe in dS/m)
Barley	*(Hordeum vulgare)*	16 - 24
Cotton	*(Gossypium hirsutum)*	15 5
Sugarbeet	*(Beta vulgaris)*	6 - 12 5
Sorghum	*(Sorghum bicolor)*	13
Safflower	*(Carthomus tinctorius)*	12 3
Wheat	*(Triticum aestivum)*	14 - 16
Beet, red	*(Beta vulgaris)*	13 8
Alfalfa	*(Medicago sativa)*	8 2 - 13 4
Tomato	*(Lycopersicon Lycopersicum)*	7 6
Rice	*(Oryza sativa)*	18
Cabbage	*(Brassica oleracea capitata)*	13
Muskmelon	*(Cucumis melo)*	10 4
Maize	*(Zea mays)*	21 24
Lettuce	*(Lactuca sativa)*	11 4
Onion	*(Allium cepa)*	5 6 7 5
Bean	*(Phaseolus vulgaris)*	8 0

1 Data taken from Maas (1984)

BEST AVAILABLE COPY

Table E-9

Relative boron tolerance of agricultural crops (1) (2)

Very Sensitive (<0 5 mg/L)

Lemon	*Citrus Limon*
Blackberry	*Rubus spp*

Sensitive (0.5 0.75 mg/L)

Avocado	*Persea americana*
Grapefruit	*Citrus X paradisi*
Orange	*Citrus sinensis*
Apricot	*Prunus armeniaca*
Peach	*Prunus persica*
Cherry	*Prunus avium*
Plum	*Prunus domestica*
Persimmon	*Diospyros Kaki*
Fig Kadota	*Ficus carica*
Grape	*Vitis vinifera*
Walnut	*Juglans regia*
Pecan	*Carya illinoiensis*
Cowpea	*Vigna unguiculata*
Onion	*Allium cepa*

Sensitive (0.75-1.0 mg/L)

Garlic	*Allium sativum*
Sweet potato	*Ipomoea batatas*
Wheat	*Triticum eastivum*
Barley	*Hordeum vulgare*
Sunflower	*Helianthus anraius*
Bean, mung	*Vigna radiata*
Sesame	*Sesamum indicum*
Lupine	*Lupinus hartwegii*
Strawberry	*Fragaria spp*
Artichoke, Jerusalem	*Helianthus tuberosus*
Bean, Kidney	*Phaseolus vulgaris*
Bean, lima	*Phaseolus lunatus*
Groundnut/Peanut	*Arachis hypogaea*

Moderately Sensitive (1 0-2 0 mg/L)

Pepper red	*Capsicum crucum*
Pea	*Pisum sativa*
Carrot	*Daucus carota*
Radish	*Raphanus sativus*
Potato	*Solanum tuberosum*
Cucumber	*Cucumis sativus*

Moderately Tolerant (2.0-4.0 mg/L)

Lettuce	*Lactuca sativa*
Cabbage	*Brassica oleracea capitata*
Celery	*Apium graveolens*
Turnip	*Brassica rapa*
Bluegrass Kentucky	*Poa pratensis*
Oats	*Avena sativa*
Maize	*Zea mays*
Artichoke	*Cynara scolymus*
Tobacco	*Nicotiana tabacum*
Mustard	*Brassica juncea*
Clover sweet	*Melilotus indica*
Squash	*Cucurbita pepo*
Muskmelon	*Cucumis melo*

Tolerant (4.0-6.0 mg/L)

Sorghum	*Sorghum bicolor*
Tomato	*Lycopersicon Lycopersicum*
Alfalfa	*Medicago sativa*
Vetch, purple	*Vicia benghalensis*
Parsley	*Petroselinum crispum*
Beet red	*Beta vulgaris*
Sugarbeet	*Beta vulgaris*

Very Tolerant (6.0-15.0 mg/L)

Cotton	*Gossypium hirsutum*
Asparagus	*Asparagus officinalis*

(1) Data taken from Maas (1984)
(2) Maximum concentrations tolerated in soil water without yield or vegetative growth reductions Boron tolerances vary depending upon climate soil conditions and crop varieties Maximum concentrations in the irrigation water are approximately equal to these values or slightly less

Source FAO Guidelines, R S Ayers & D W Westcot (1985)

BEST AVAILABLE COPY

Table E-10

Relative tolerance of selected crops to exchangeable sodium (1)

Sensitive (2)	Semi-tolerant(2)	Tolerant(2)
Avocado	Carrot	Alfalfa
(Persea americana)	*(Daucus carota)*	*(Medicago sativa)*
Deciduous Fruits	Clover Ladino	Barley
Nuts	*(Trifolium repens)*	*(Hordeum vulgare)*
Bean green	Dallisgrass	Beet, garden
(Phaseolus vulgaris)	*(Paspalum dilatatum)*	*(Beta vulgaris)*
Cotton *(at germination)*	Fescue tall	Beet, sugar
(Gossypium hirsutum)	*(Festuca arundinacea)*	*(Beta vulgaris)*
Maize	Lettuce	Bermuda grass
(Zea mays)	*(Lactuca sativa)*	*(Cynodon dactylon)*
Peas	Bajara	Cotton
(Pisum sativum)	*(Pennisetum typhoides)*	*(cossypium hirsutum)*
Grapefruit	Sugarcane	Paragrass
(Citrus paradisi)	*(Saccharum officinarum)*	*(Brachiria mutica)*
Orange	Berseem	Rhodes grass
(Citrus sinensis)	*(Trifolium alexandrinum)*	*(Chloris gayana)*
Peach	Benji	Wheatgrass crested
(Prunus persica)	*(Melilotus parviflora)*	*(Agropyron cristatum)*
Tangerine	Raya	Wheatgrass fairway
(Citrus reticulata)	*(Brassica juncea)*	*(Agropyron cristatum)*
Mung	Oat	Wheatgrass fairway tall
(Phaseolus aurus)	*(Avena sativa)*	*(Agropyron slongatum)*
Mash	Onion	Karnal grass
(Phaseolus mungo)	*(Allium cepa)*	*(Diplachra fusca)*
Lentil	Radish	
(Lens culinaris)	*(Raphanus sativus)*	
Groundnut *(peanut)*	Rice	
(Arachis hypogaea)	*(Oryza sativus)*	
Cram	Rye	
(Cicer arietirum)	*(Secale cereale)*	
Cowpeas	Ryegrass Italian	
(Vigna sinensis)	*(Lolium multiflorum)*	
	Sorghum	
	(Sorghum vulgare)	
	Spinach	
	(Spinacia oleracea)	
	Tomato	
	(Lycopersicon esculentum)	
	Vetch	
	(Vicia sativa)	
	Wheat	
	(Triticum vulgare)	

Adapted from data of FAO-Unesco (1973) Pearson (1960) and Abrol (1982)
Source FAO Guidelines R S Ayers & D W Westcot (1985)

Table E-11

LABORATORY DETERMINATIONS NEEDED TO EVALUATE COMMON IRRIGATION WATER QUALITY PROBLEMS

Water parameter	Symbol	Unit[1]	Usual range in irrigation water	
SALINITY				
Salt Content				
Electrical Conductivity	EC_w	dS/m	0 - 3	dS /m
(or)				
Total Dissolved Solids	TDS	mg/l	0 - 2000	mg/l
Cations and Anions				
Calcium	Ca^{++}	me/l	0 - 20	me/l
Magnesium	Mg^{++}	me/l	0 - 5	me/l
Sodium	Na^{+}	me/l	0 - 40	me/l
Carbonate	CO_3^{--}	me/l	0 - 1	me/l
Bicarbonate	HCO_3^{-}	me/l	0 - 10	me/l
Chloride	Cl^{-}	me/l	0 - 30	me/l
Sulphate	SO_4^{--}	me/l	0 - 20	me/l
NUTRIENTS[2]				
Nitrate - Nitrogen	NO_3 - N	mg/l	0 - 10	mg/l
Ammonium - Nitrogen	NH_4 - N	mg/l	0 - 5	mg/l
Phosphate - Phosphorus	PO_4 - P	mg/l	0 - 2	mg/l
Potassium	K^{+}	mg/l	0 - 2	mg/l
MISCELLANEOUS				
Boron	B	mg/l	0 - 2	mg/l
Acid / Basicity	pH	1 - 14	6 0 - 8 5	
Sodium Adsorption Ratio[3]	SAR	(me/1)[1 2]	0 - 15	

1 dS/m = deciSiemen/meter in S I units (equivalent to 1 mmho / cm - 1 millimmho / centimeter)
mg/l = milligram per litre ~ parts per million (ppm)
me/l = milliequivalent per litre (mg/l + equivalent weight = me/l) in SI units 1 me/l = 1 millimol / litre adjusted for electron charge

2 NO3-N means the laboratory will analyse for NO3 but will report the NO3 in terms of chemically equivalent nitrogen Similarly for NH4-N the laboratory will analyse for NH4 but report in terms of chemically equivalent elemental nitrogen The total nitrogen available to the plant will be the sum of the equivalen elemental nitrogen
The same reporting method is used for phosphorus

3 SAR is calculated from the Na Ca and Mg reported in me/l

Table F 12

Crop tolerence and yield potential of selected crops as influenced by irrigation water salinity (ECw) or soil salinity (ECe)

	Yield potential (2)									
	100%		90%		75%		50%		0% maximum(3)	
	ECe	ECw	ECe	ECw	ECe	ECw	ECe	ECw	ECe	ECw
Field crops										
Barley *(Hordeum Vulgare)* (4)	8 0	5 3	10	6 7	13	8 7	18	12	28	19
Cotton *(Gossypium hirsutum)*	7 7	5 1	9 6	6 4	13	8 4	17	12	27	18
Sugarbeet *(Beta vulgaris)* (5)	7 0	4 7	8 7	5 8	11	7 5	15	10	24	16
Sorghum *(Sorghum bicolor)*	6 8	4 5	7 4	5 0	8 4	5 6	9 9	6 7	13	8 7
Wheat *(Triticum aestivum)* (4) (6)	6 0	4 0	7 4	4 9	9 5	6 3	13	8 7	20	13
Wheat durum *(Triticum turgidum)*	5 7	3 8	7 6	5 0	10	6 9	15	10	24	16
Soyabean *(Glycine max)*	5 0	3 3	5 5	3 7	6 3	4.2	7 5	5 0	10	6 7
Cowpea *(Vigna unguiculata)*	4 9	3 3	5 7	3 8	7 0	4 7	9 1	6 0	13	8 8
Groundnut *(peanut)* *(Arachis hypogaea)*	3 2	2.1	3 5	2 4	4 1	2 7	4 9	3 3	6 6	4 4
Rice *(paddy)* *(Oriza sativa)*	3 0	2 0	3 8	2 6	5 1	3 4	7 2	4 8	11	7 6
Sugarcane (Saccharum officinarum)	1 7	1 1	3 4	2 3	5 9	4 0	10	6 8	19	12
Corn *(maize)* *(Zea mays)*	1 7	1 1	2 5	1 7	3 8	2 5	5 9	3 9	10	6 7
Flax *(Linum usitatissimum)*	1 7	1 1	2 5	1 7	3 8	2 5	5 9	3 9	10	6 7
Broadbean *(Vicia faba)*	1 5	1 1	2 6	1 8	4 2	2 0	6 8	4 5	12	8 0
Bean *(phaseolus vulgaris)*	1 0	0 7	1 5	1 0	2 3	1 5	3 6	2 4	6 3	4 2
Vegetable crops										
Squash zucchini *(courgette)* *(Cucurbita pepo melopepo)*	4 7	3 1	5 8	3 8	7 4	4 9	10	6 7	15	10
Beet, red *(Beta vulgaris)*(5)	4 0	2 7	5 1	3 4	6 8	4 5	9 6	6 4	15	10
Squash scallop *(Cucurbita pepo melopepo)*	3 2	2 1	3 8	2 6	4 8	3 2	6 3	4 2	9 4	6 3
Broccoli *(Brassica oleracea botrytis)*	2 8	1 9	3 9	2 6	5 5	3 7	8 2	5 5	14	9 1
Tomato *(Laycopersicon esculentum)*	2 5	1 7	3 5	2 3	5 0	3 4	7 6	5 0	13	8 4
Cucumber *(Cucumis sativus)*	2 5	1 7	3 3	2 2	4 4	2 9	6 3	4 2	10	6 8
Spinach *(Spinacia olerucea)*	2 0	1 3	3 3	2 2	5 3	3 5	8 6	57	15	10
Celery *(Apium graveolens)*	1 8	1 2	3 4	2 3	5 8	3 9	9 9	66	18	12
Cabbage *(Brassica oleracea capitata)*	1 8	1 2	2 8	1 9	4 4	2 9	7 0	4 6	12	8 1
Potato *(Solanum tuberosum)*	1 7	1 1	2 5	1 7	3 8	2 5	5 9	3 9	10	6 7
Corn sweet *(maize)* *(Zea mays)*	1 7	1 1	2 5	1 7	3 8	2 5	5 9	3 9	10	6 7
Sweet potato *(Impomoea batatas)*	1 5	1 0	2 4	1 6	3 8	2.5	6 0	4 0	11	7 1
Pepper *(Capsicum annuum)*	1 5	1 0	2 2	1 5	3 3	2.2	5 1	3 4	8 6	5 8
Lettuce *(Lactuca sativa)*	1 3	0 9	2 1	1 4	3 2	2.1	5 1	3 4	9.0	6 0
Radish *(Raphanus sativus)*	1 2	0 8	2 0	1 3	3 1	2.1	5 0	3 4	8 9	5 9
Onion *(Allium cepa)*	1 2	0 8	1 8	1 2	2.8	1 8	4 3	2 9	7 4	5 0
Carrot *(Daucus carota)*	1 0	0 7	1 7	1 1	2 8	1 9	4 6	3 0	8 1	5 4
Bean *(Phaseolus vulgaris)*	1 0	0 7	1 5	1 0	2 3	1.5	3 6	2 4	6 3	4 2
Turnip *(Phaseolus vulgaris)*	0 9	0 6	2 0	1 3	3 7	2.5	6 5	4 3	12	8 0
Forage crops										
Wheatgrass tall *(Agropyron elongatum)*	7 5	5 0	9 9	6 6	13	9 0	19	13	31	21
Wheatgrass fairway crested *(Agropyron cristatum)*	7 5	5 0	9 0	6 0	11	7 4	15	9 8	22	15
Bermuda grass *(Cynodon dactylon)* (7)	6 9	4 6	8 5	5 6	11	7 2	15	9 8	23	15
Barley *(forage)* *(Hordeum vulgare)* (4)	6 0	4 0	7 4	4 9	9 5	6 4	13	8 7	20	13
Ryegrass, perennial *(Lolium perenne)*	5 6	3 7	6 9	4 6	8 9	5 9	12	8 1	19	13
Trefoil, narrowleaf birdsfoot (8) *(Lotus corniculatus tenuifolium)*	5 0	3 3	6 0	4 0	7 5	5 0	10	6 7	15	10

Table F 12 Continued

	Yield potential									
	100%		90%		75%		50%		0%maximum (3)	
	ECe	ECw	ECe	ECw	ECe	ECw	ECe	ECw	Ece	ECw
Harding grass *(Phalaris tuberosa)*	4 6	3 1	5 9	3 9	7 9	5 3	11	7 4	18	12
Fescue, tall *(Festuca elatior)*	3 9	2 6	5 5	3 6	7 8	5 2	12	7 8	20	13
_Wheatgrass standard crested *(Agropyron sibiricum)*	3 5	2 3	6 0	4 0	9 8	6 5	16	11	28	19
Vetch common *(Vicia angustifolia)*	3 0	2 0	3 9	2 6	5 3	3 5	7 6	5 0	12	8 1
Sudan grass *(Sorghum sudanense)*	2 8	1 9	5 1	3 4	8 6	5 7	14	9 6	26	17
Wildrye, beardless *(Elymus trucoides)*	2 7	1 8	4 4	2 9	6 9	4 6	11	7 4	19	13
Cowpea *(forage)* *(Vigna unguiculata)*	2 5	1 7	3 4	2 3	4 8	3 2	7 1	4 8	12	7 8
Trefoil big *(Lotus uliginosus)*	2 3	1 5	2 8	1 9	3 6	2 4	4 9	3 3	7 6	5 0
Sesbania *(Sesbania exaltata)*	2 3	1.5	3 7	2 5	5 9	3 9	9 4	6 3	17	11
Sphaerophysa *(Sphaerophysa salsula)*	2 2	1 5	3 6	2 4	5 8	3 8	9 3	6 2	16	11
Alfalfa *(Medicago sativa)*	2 0	1 3	3 4	2 2	5 4	3 6	8 8	5 9	16	10
Lovegrass *(Eragrostis sp)* (9)	2 0	1 3	3 2	2 1	5 0	3 3	8 0	5 3	14	9 3
Corn *(forage)* *(maize)* *(Zea mays)*	1 8	1 2	3 2	2 1	5 2	3 5	8 6	5 7	15	10
Clover, berseem *(Trifolium alexundrinum)*	1 5	1 0	3 2	2 2	5 9	3 9	10	6 8	19	13
Orchard grass *(Dactylis glomerata)*	1 5	1 0	3 1	2 1	5 5	3 7	9 6	6 4	18	12
Foxtail meadow *(Alopecurus pratensis)*	1 5	1 0	2 5	1 7	4 1	2 7	6 7	4 5	12	7 9
Clover red *(Trifolium pratense)*	1 5	1 0	2 3	1 6	3 6	2 4	5 7	3 8	9 8	6 6
Clover alsika *(Trifolium hybridum)*	1 5	1 0	2 3	1 6	3 6	2 4	5 7	3 8	9 8	6 6
Clover, ladino *(Trifolium repens)*	1 5	1 0	2 3	1 6	3 6	2 4	5 7	3 8	9 8	6 6
Clover strawberry *(Trifolium fragiferum)*	1 5	1 0	2 3	1 6	3 6	2 4	5 7	3 8	9 8	6 6
_Fruit crops (10)										
Date palm *(Phoenix dactylifera)*	4 0	2 7	6 8	4 5	11	7 3	18	12	32	21
Grapefruit *(Citrus paradisi)* (11)	1.8	1 2	2 4	1 6	3 4	2 2	4 9	3 3	8 0	5 4
Orange *(Citrus sinensis)*	1 7	1 1	2 3	1 6	3 3	2 2	4 8	3 2	8 0	5 3
Peach *(Prunus persica)*	1 7	1 1	2 2	1 5	2 9	1 9	4 1	2 7	6 5	4 3
Apricot *(Prunus armeniaca)* (11)	1 6	1 1	2 0	1 3	2 6	1 8	3 7	2 5	5 8	3 8
Grape *(Vitus sp)* (11)	1 5	1 0	2 5	1 7	4 1	2 7	6 7	4 5	12	7 9
Almond *(Prunus dulcis)* (11)	1 5	1 0	2 0	1 4	2 8	1 9	4 1	2 8	6 8	4 5
Plum prune *(Prunus domestica)* (11)	1 5	1 0	2 1	1 4	2 9	1 9	4 3	2 9	7 1	4 7
Blackberry *(Rubus sp)*	1 5	1 0	2 0	1 3	2 6	1 8	3 8	2 5	6 0	4 0
Boysenberry *(Rubus ursinus)*	1 5	1 0	2 0	1 3	2 6	1 8	3 8	2 5	6 0	4 0
Strawberry *(Fragaria sp)*	1 0	0 7	1 3	0 9	1 8	1 2	2 5	1 7	4 0	2 7

(1) Adapted from Maas and Hottman (1977) and Maas (1984) These data should only serve as a guide to relative tolerances among crops Absolute tolerances vary depending upon climate soil conditions and cultural practices. In gypsiferous soils plants will tolerate about 2ds/m higher soil salinity (ECe) than indicated but the water salinity (ECw) will remain the same as shown in this tabel

(2) ECe means average root zone salinity as measured by electrical conductivity of the saturation extract of the soil, reported in decisiemens per meter (ds/m) at 25C. ECw means electrical conductivity of the irrigation water in deci Siemens per meter (ds/m) The relationship between soil salinity and water salinity (ECe=1.5 ECw) assumes a 15-20 leaching fraction and a 40-30-20-10% water use pattern for the upper to lower quarters of the root zone.

(3) The zero yield potential or maximum ECe indicates the theoretical soil salinity (ECe) at which crop growth ceases.

(4) Barley and wheat are less tolerant during germination and seedling stage ECe should not exceed 4 5 dS/m in the upper soil during this period

(5) Beets are more sensitive during germination ECe should not exceed 3 ds/m in the seedling area for garden beets and sugar beets.

(6) Semi-dwarf, short cultivars may be less tolerant.

(7) Tolerance given is an average of several varieties Suwannee and Coastal Bermuda grass are about 20% more tolerant, while common and Greenfield Bermuda grass are about 20% less tolerant.

(8) Broadleaf Birdsfoot Trefoil seems less tolerant than Narrowleaf Birdsfoot Trefoil

(9) Tolerance given is an average for boer Wilman Sand and Weeping Lovegrass Lehman Lovegrass seems about 50% more tolerant.

(10) These data are applicable when rootstocks are used that do not accumulate Na^+ and Cl rapidly or when these ions do not predominate in the soil

(11) Tolerance evaluation is based on tree growth and not on yeild

Source FAO Guidelines R S Ayers & D W Westcot (1985)

Table E-13
Summary of requirements of Jordanian Standard 893/1994 for treated domestic wastewater.

Parameter	Maximum allowable limit (mg/L)*	
	Disposed to wadis, rivers, surface water bodies, and groundwater recharge	Reuse for irrigation
pH	6 5-9	6 5-9
Temperature change (C°)	<3	-
D O	≥1	-
TDS	3000	2000 (1)
TSS	50(3) / 200(4)	100 (1)
BOD5	50(3) / 50(4)	-
COD	150(3) / 150(4)	-
NH3	30	-
FOG	15	15
ABS	6	-
Cl2	0 5 (5)	-
Phenol	0 5	-
TFCC MPN/100mL	<1000	<1000 (6)
Intestinal nematodes	<1	<1 (6)

* All units are in mg/L except where noted

(1) Depends on degree of restriction (none, slight to moderate, or severe)

(2) Depends on method of irrigation

(3) Conventional wastewater treatment plants

(4) Waste stabilization ponds

(5) This is a minimum limit of residual chlorine and it should be linked with total faecal coliform count

(6) FAO and WHO guidelines and their amendments should be taken into consideration

APPENDIX F

POTASH MANUFACTURING FACILITY PHOTOS

BEST AVAILABLE COPY

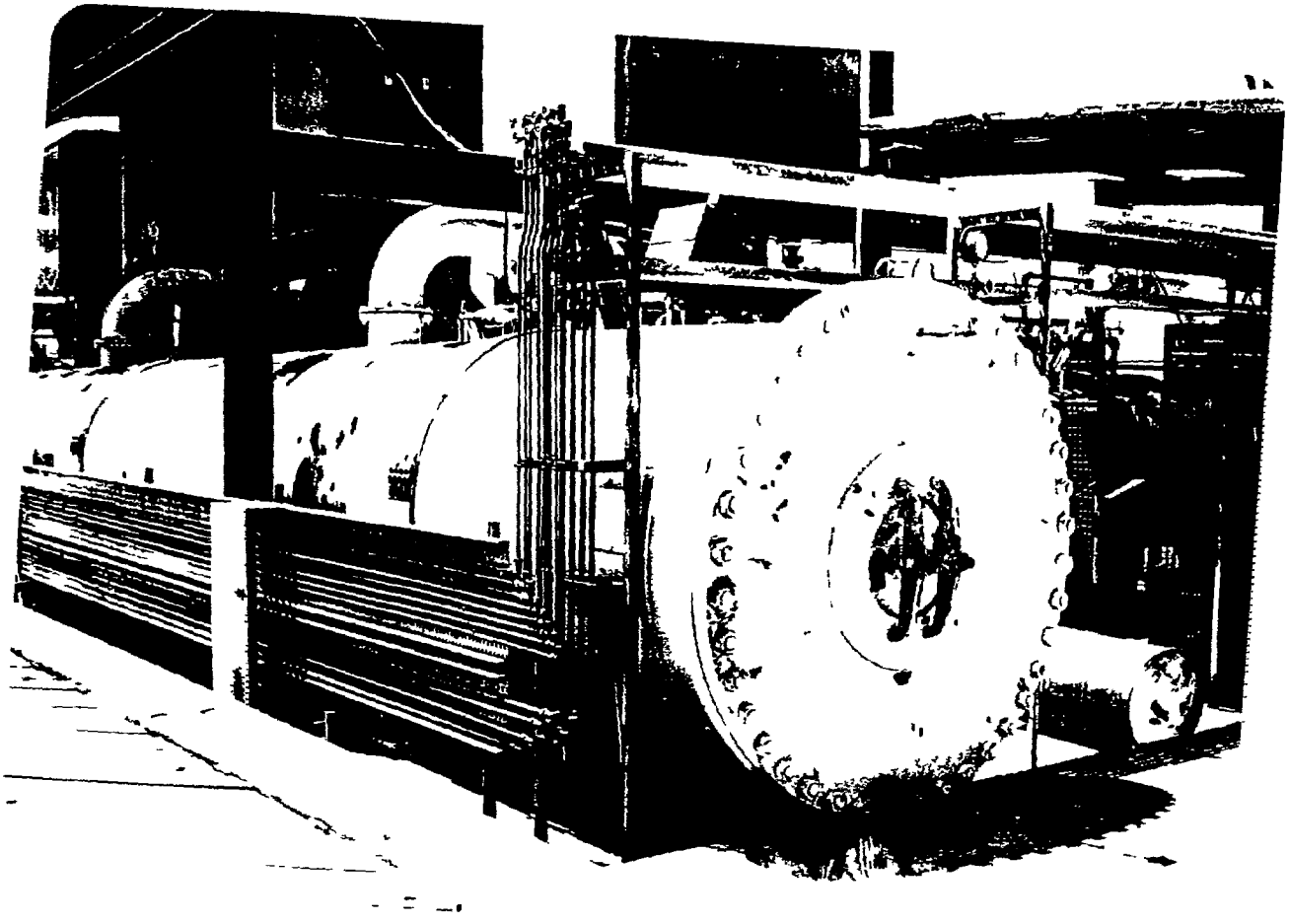

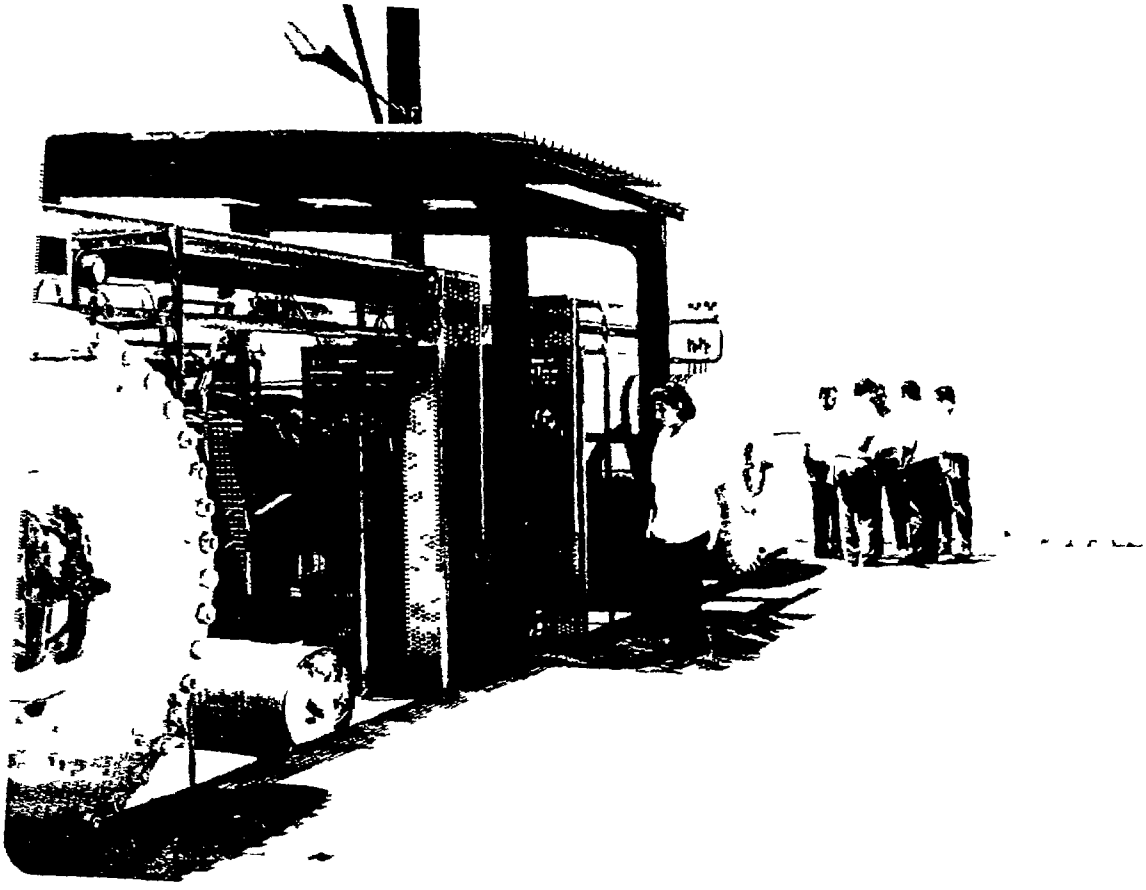

Dead Sea Intake Pumping Station

BEST AVAILABLE COPY

Potash Manufacturing Facilities and Evaporation Ponds

BEST AVAILABLE COPY

Typical Carnallite Pond Discharges and Salt Built-up

BEST AVAILABLE COPY

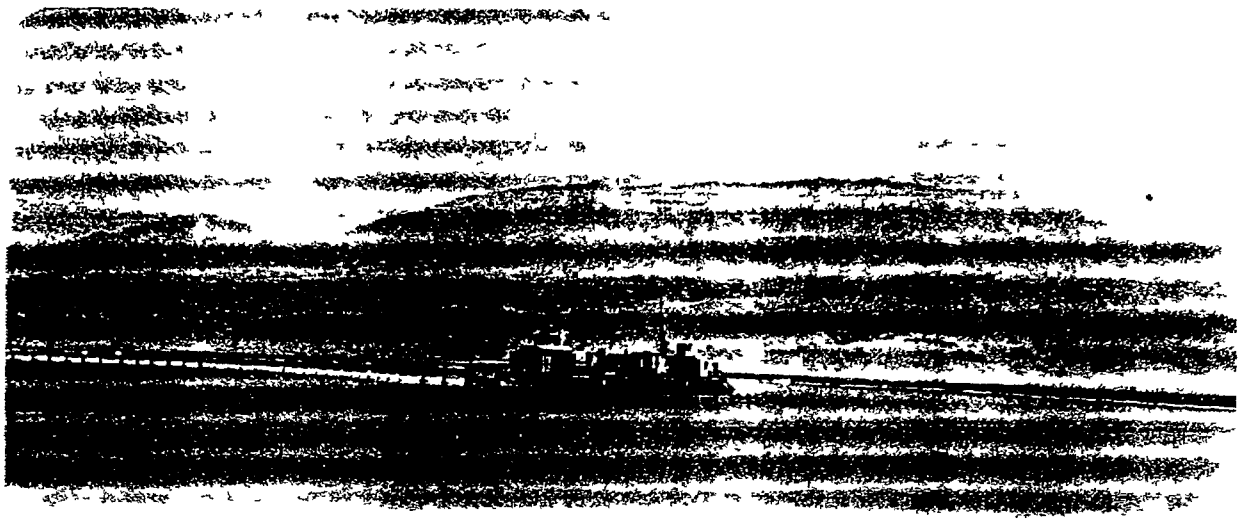

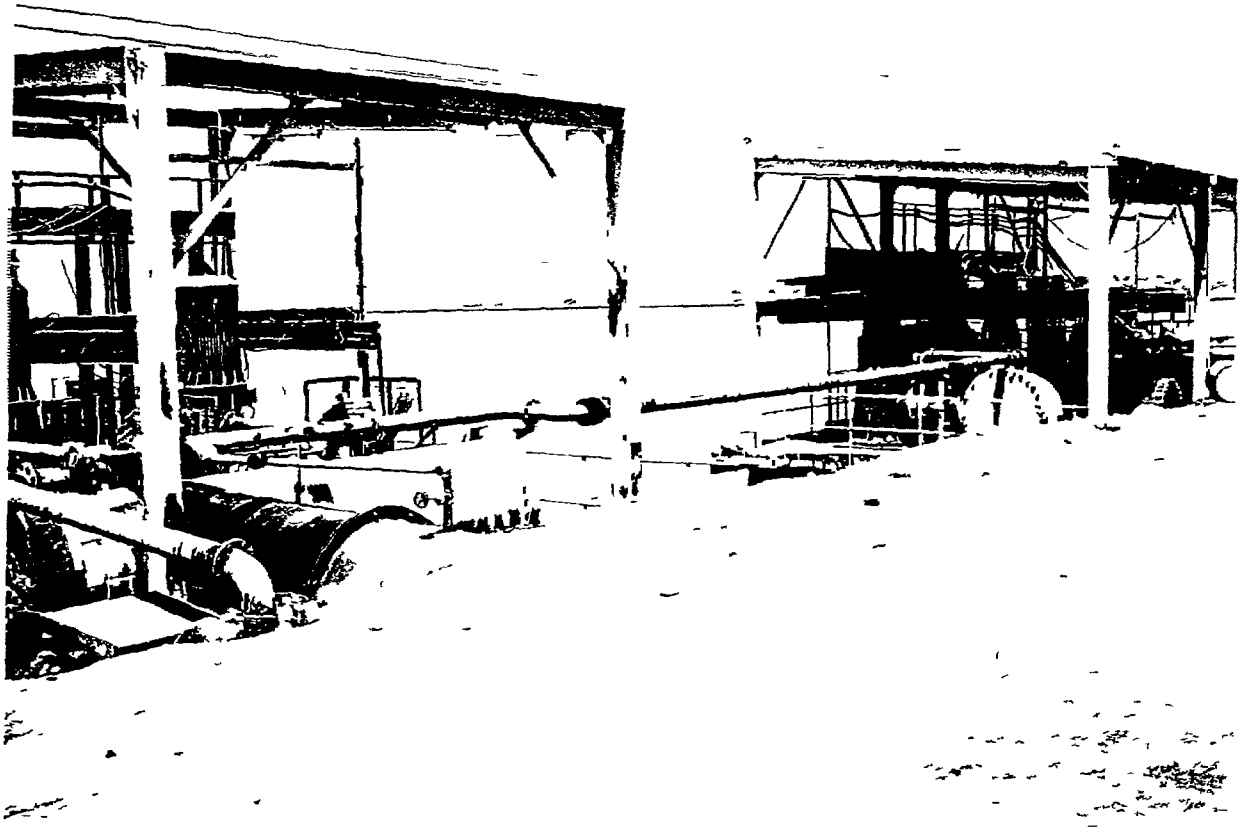

Carnallite Harvester and Pumping Station

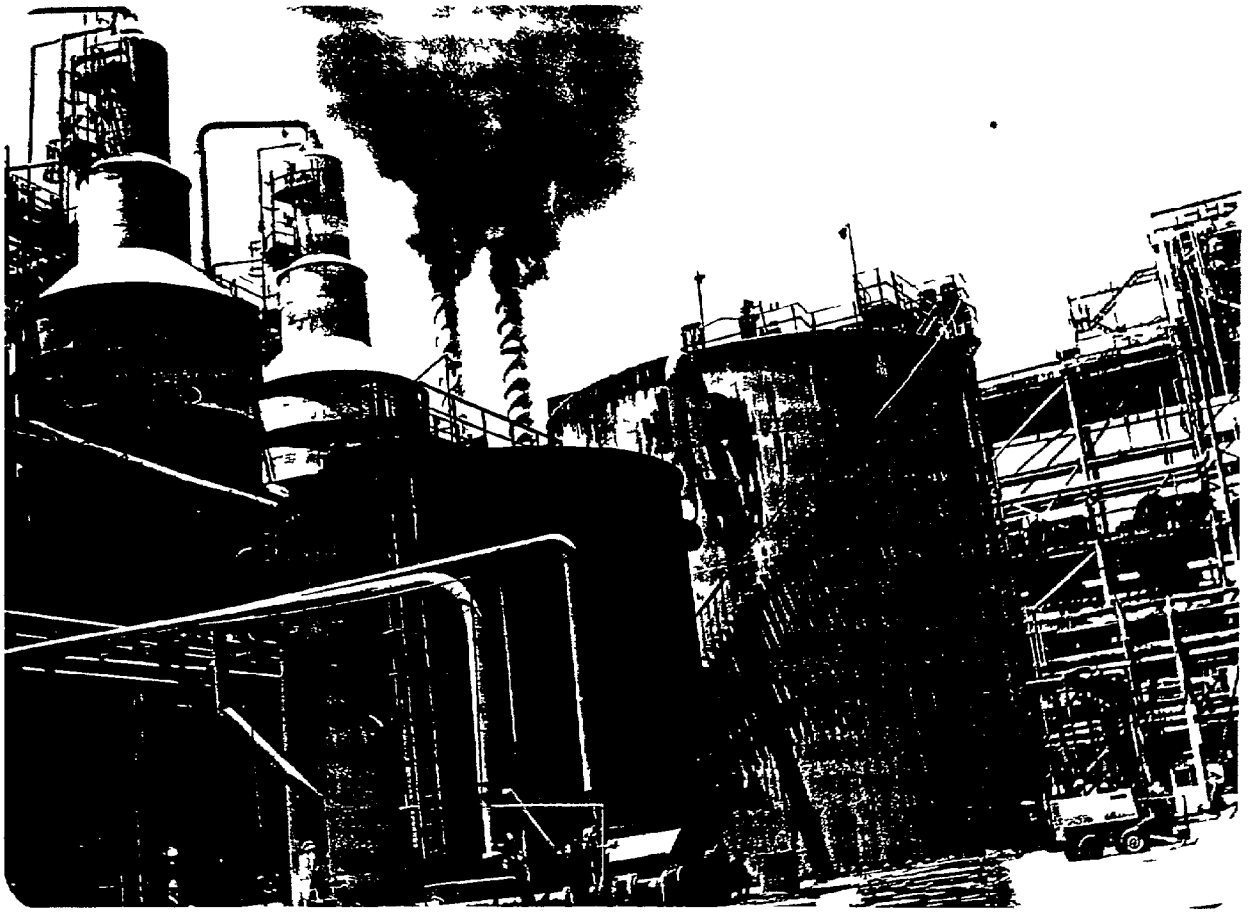

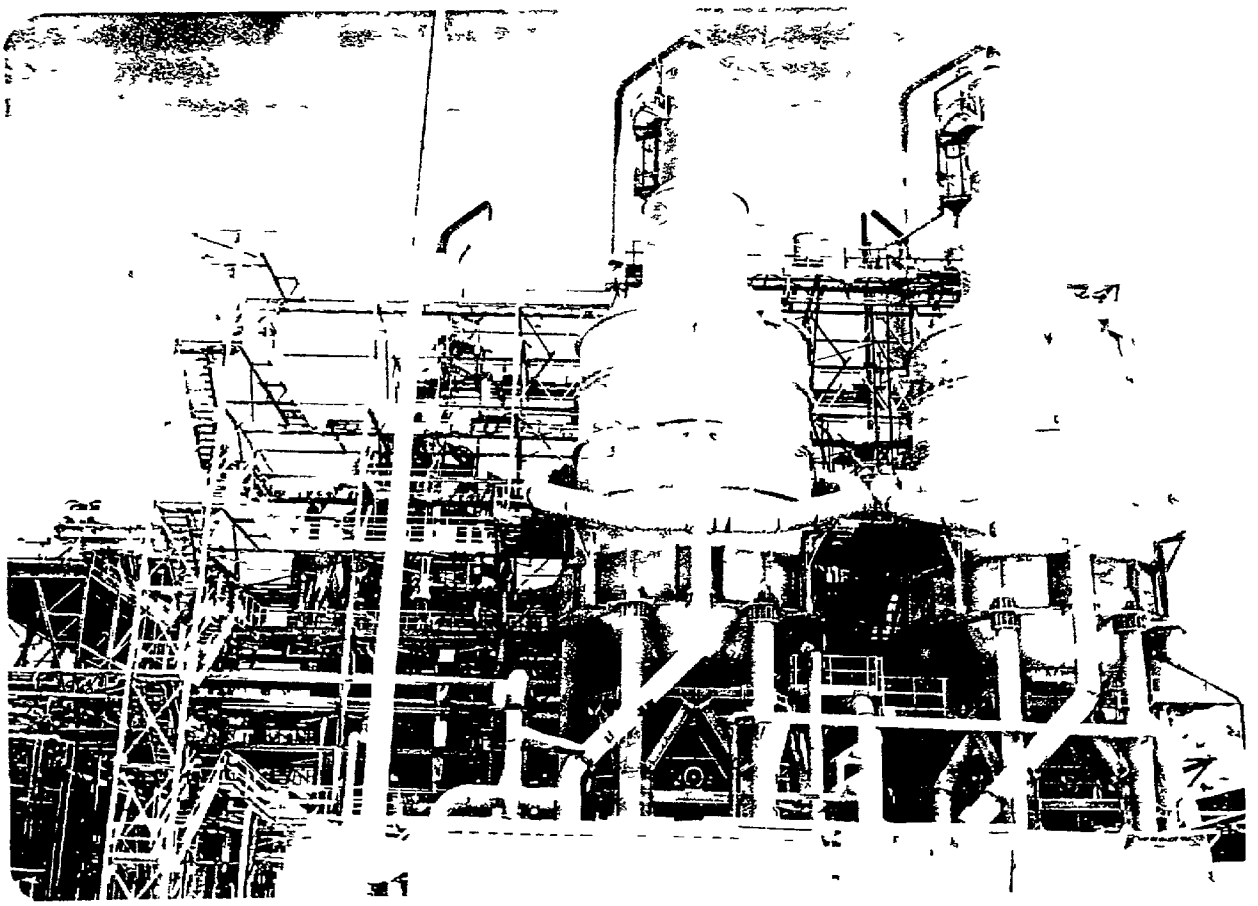

Potash Crystallizers

BEST AVAILABLE COPY