PN ACE-224
100161

WASTEWATER TREATMENT FOR PERU: A FEASIBILITY STUDY

Submitted to

U.S Agency for International Development
Lima, Peru

Submitted by

The SeaCrest Group
325 Interlocken Parkway
Suite 205
Broomfield, Colorado 80021, USA

December 6, 1996

A

Bibliographic Elements

TITLE

Wastewater Treatment for Peru A Feasibility Study

AUTHOR

The SeaCrest Group

PROJECT NUMBER

527-0368 - Sustainable Environmental and Natural Resources Management

CONTRACT NUMBER

SPONSORING USAID OFFICE

Environmental and Natural Resources

CONTRACTOR NAME

The SeaCrest Group

DATE OF PUBLICATION

December 6, 1996

STRATEGIC OBJECTIVE

SO4 - Improved Environmental Management in Targeted Sectors

EXECUTIVE SUMMARY

Much of the domestic and industrial wastewater discharged in Peru receives little or no treatment before it enters rivers and coastal waters This lack of treatment has caused significant pollution at numerous locations along the Peruvian coast The pollution represents a human health risk as well as having an effect on the marine ecology of the area High investment and operating costs are a major barrier to instituting wastewater treatment at many locations

As a group, the fishmeal industry discharges one of the largest loads of solids into the coastal waters The majority of this discharge is biological in nature and has a biological oxygen demand (BOD) equivalent to a city of more than 6 million people Given this large load, any progress in reducing the impacts of the wastewater discharges from the fishmeal industry will significantly improve coastal water quality

The wastewater from the fishmeal industry contains large volumes of fish solids as well as nutrient loads (primarily nitrogen) The recovered solids have potential uses as a fertilizer or protein supplement in animal feeds The nutirients have possible applications in stimulating growth of algae which can be used in nutriceutical, pharmaceutical, or animal food supplement applications Recovery and sale of these products could help offset costs for any needed wastewater facilities At the same time, development of the animal feed / fertilizer and aquaculture industries could provide additional jobs for local residents

A conceptual design for providing treatment of the fishmeal discharges includes an initial step to remove and recover solids These solids can then be marketed either locally or internationally as an animal food supplement for cattle, poultry, etc The treated waters contain a high level of nitrogen which has value in supporting algal aquaculture Promising algal species which could be cultured include Ulva, Spirulina, and Gracilaria, among others The use of these waters in growing algae can result in further improvements in water quality The waters exiting the aquaculture system can then be discharged through a wetland system designed to grow an additional product (e g Salicornia) and/or to support wildlife communities The waters which then enter coastal waters should have undergone a high degree of treatment leading to much improved coastal water quality

A low cost, low technology wastewater treatment system can probably remove up to 60% of the solids load expected in fishmeal plant discharges However, the remaining nutrient and solids could overload an aquaculture system without additional dilution Such dilution may require pumping of seawater A high technology protein recovery system, on the other hand, may be able to remove up to 99% of the solids load This system could have high initial costs to install and operate However, these costs may be offset by the efficiency of the system and the volume of material that is recovered and can be marketed throughout the world

The conceptual design indicates that the feasibility for such a system is good However, additional information will be required to definitively prove the concept of a treatment and aquaculture system Pilot scale studies will be required to generate these additional data These could include both bench and field scale pilot investigations

TABLE OF CONTENTS

1 INTRODUCTION 1
- 1 1 Problem Definition 1
- 1 2 Regulatory Framework 2
  - 1 2 1 Fishmeal Wastewaters 2
  - 1 2 2 Domestic Wastewaters 3
  - 1 2 3 Regulatory Implications of Feasibility Study 3
- 1 3 Approach to Feasibility Study 3
  - 1 3 1 Strategy 3
  - 1 3 2 Assumptions 4
  - 1 3 3 Treatability options 5
- 1 4 Description of Waste Streams 7
  - 1 4 1 Fishmeal Wastewater 7
  - 1 4 2 Domestic Wastewater 10
    - *1 4 2 1 Seawater disposal of domestic wastewater* *10*
    - *1 4 2 2 Land disposal of biosolids* *11*

2 TREATMENT TECHNOLOGIES 11
- 2 1 Fishmeal Wastewaters Primary Treatment by Protein Recovery 11
  - 2 1 1 Introduction 11
  - 2 1 2 Process Design 13
    - *2 1 2 1 Conceptual Design* *13*
    - *2 1 2 2 Considerations for Pilot Plant* *14*
- 2 2 Fishmeal Wastewaters Primary Treatment by Physical Treatment 14
  - 2 2 1 Introduction 14
  - 2 2 2 Pretreatment Processes 15
    - *2 2 2 1 Coarse Solids Removal* *15*
    - *2 2 2 2 Preconditioning* *16*
    - *2 2 2 3 Oil and Suspended Solids Reduction* *16*
    - *2 2 2 4 Flow Equalization /Settling /Chemical Addition* *17*
    - *2 2 2 5 Summary* *18*
- 2 3 Fishmeal Wastewaters Secondary Treatment / Aquaculture 18
  - 2 3 1 Introduction 18
  - 2 3 2 Products from Algae 20
    - *2 3 2 1 Food* *20*
    - *2 3 2 2 By-products* *22*
    - *2 3 2 3 Fertilizer* *24*
    - *2 3 2 4 Animal Feed* *24*
    - *2 3 2 5 Pharmaceutical By-products* *24*
  - 2 3 3 General Conditions for the Aquaculture of Algae 25
  - 2 3 4 Species to Consider for Aquaculture 27
    - *2 3 4 1 Macroalgae* *28*
    - *2 3 4 2 Microalgae* *29*
    - *2 3 4 3 Choice of Species for Pilot Evaluation* *30*
  - 2 3 5 Engineering Design of a Pilot Aquaculture / Secondary Treatment Facility 32
    - *2 3 5 1 Linkage with Primary treatment* *32*
    - *2 3 5 2 Water Quality Requirements* *32*
    - *2 3 5 3 Construction and Operational Parameters* *33*
- 2 4 Fishmeal Wastewaters The Tertiary Step Option 34

d

2 4 1 Introduction 34
2 4 2 Wetlands 34
2 4 2 1 Peruvian Coastal Marshes *35*
2 4 2 2 Ancillary Benefits of Wetlands *35*
2 4 2 3 Products from Wetlands *36*
2 4 3 Rapid Infiltration Systems 36
2 4 3 1 General *36*
2 4 3 2 Design of a Pilot Plant *38*
2 4 4 Applicability and Conclusions 38
2 5 Domestic Wastewaters The AIWPS Approach 39
2 5 1 Introduction 39
2 5 2 The Role of Algae in Wastewater Treatment 40
2 5 2 1 Nutrients *40*
2 5 2 2 Light *40*
2 5 2 3 Temperature *41*
2 5 2 4 Salinity *42*
2 5 2 5 pH *42*
2 5 3 The Advanced Integrated Wastewater Pond System (AIWPS) 42
2 5 4 Performance 45
2 5 5 Cost Criteria 45
2 5 6 Conclusion 45
3 COSTS AND BENEFITS OF THE SYSTEM 47
3 1 Assumptions 47
3 2 Cost-Benefit Comparison 47
3 2 1 Primary Stage, Physical Treatment 47
3 2 2 Secondary Stage, Aquaculture System 48
3 2 3 Tertiary Stage, RI/Wetland System 49
3 3 Potential markets for by-products and value-added products 49
3 4 Local Participation 50
4 RECOMMENDATIONS 51
4 1 Domestic Wastewaters 50
4 2 Fishmeal Wastewaters 52
4 3 Conclusion 54
5 BIBLIOGRAPHY 54
APPENDIX 1 RESPONSES TO DRAFT COMMENTS FROM USAID 55

LIST OF TABLES

Table 1 Effluent Characteristics of fishmeal pumping water 5
Table 2 Summary of biomedical uses of algae and other marine by-products 25
Table 3 Relative advantages and disadvantages of species of interest for aquaculture 27
Table 4 Suggested water quality design criteria 33
Table 5 Major elements in waste grown algae 40
Table 6 Influence of latitude on photosynthetic oxygenation 41
Table 7 AIWPS treatment performance data from Richmond, California (1992) 45

LIST OF FIGURES

Figure 1 Proposed process design for fishmeal wastewaters 8
Figure 2 Typical fishmeal plant process design 9
Figure 3 Conceptual process design for protein recovery system 12
Figure 4 Solids removal unit 15
Figure 5 Oil and solids coalescing separator 17
Figure 6 Summary of proposed process design for physical treatment 21

E

Figure 7 *Porphyra* sp 23
Figure 8 *Ulva lactuca* 23
Figure 9 *Spirulina* 23
Figure 10 *Lyngbya majuscula* 31
Figure 11 *Gracilaria salicornia* 31
Figure 12 *Gracilaria* sp 31
Figure 13 Sketch of the principle of RI systems 38
Figure 14 AIWPS process description 46

1. INTRODUCTION

1.1 Problem Definition

Peru boasts 2,414 km of Pacific coastline The cold Humboldt Current runs northwards along most of the length of the country, contributing to one of the most productive fisheries in the world As a result, Peru is the world's largest fishmeal producer The natural productivity also supports a rich bird and marine mammal communities on the coast In previous times, this supported profitable guano and hunting industries Nowadays these same birds and mammals represent a valuable tourism resource

Almost half of the Peruvian population lives along the coastline A large proportion is congregated in the Lima urban area It is inevitable that conflicts arise between various uses of the coastal area Marine pollution caused by domestic and industrial wastewaters is a growing environmental and health concern This is especially true in areas such as Pisco-Paracas where fishmeal factories are numerous and close to sensitive marine habitat reserves

The main fish processing areas (Paracas, Chimbote and Paita), many smaller harbors, and the Lima-Callao urban area show similar symptoms turbid waters, anoxic bottoms and heavy eutrophication of bay waters These impacts are often combined with severe odor problems and fish kills A large portion (perhaps half) of the pollution causing this situation is caused by discharges from coastal fishmeal plants, which until recently released all wastewaters untreated Domestic wastewaters are also released untreated all along the coast Improvement in water quality is contingent on either decreases in the amount of wastewater discharged or better treatment

A number of projects are ongoing in Peru to deal with these issues These involve waste minimization in the fisheries industry, design of wastewater treatment programs for cities, and regulatory efforts from Peruvian environmental authorities to compel industries to adopt environmental management plans In this context a desire for cost-effective, innovative options exists

Traditional approaches to wastewater treatment have typically used an "end-of-pipe" approach to clean up the discharges by using conventional technology These approaches represent a pure cost, as no direct benefits (beyond water quality improvements) are achieved However, it is difficult to obtain investments in energy and knowledge intensive technological solutions in developing countries Ultimately, treatment technology which provides a return on investment through recapture useful products or other ancillary benefits may have a better chance of adoption and implementation

The objective of this study is to evaluate the feasibility of a range of treatment options to deal with wastewaters from fishmeal plants and domestic wastewaters The emphasis is on the production of value-added products as an adjunct to the treatment of these discharges

1.2 Regulatory Framework

1 2 1 Fishmeal Wastewaters

Since the fishing industry is such a critical part of the Peruvian economy, the activity is strictly regulated The Peruvian Institute of the Sea (IMARPE) is responsible for monitoring the fish population and catch and sets catch-based fishing seasons to maintain sustainable yields Fishing seasons, which may open and close on short notice, are regulated by IMARPE The extent of the fishing season is variable and may last up to six months with temporary halts ("vedas") in between It is therefore impossible to predict exactly the length and scope of the fishing season

The fishmeal industry consumes the majority of the landed "anchoveta" fish During the fishing season the fleet fishes continuously and the fishmeal factories essentially operate around the clock The individual industries are regulated by the Ministry of Fisheries which is responsible for discharge limitations and other environmental regulations applicable to the industry The Ministry of Fisheries has focused on two approaches to environmental regulation of the industry a) the promulgation of Maximum Contaminant Limits (MCLs) and b) the implementation of Environmental Management Plans (PAMA) for individual factories

Maximum Contaminant Limits for fishmeal wastewaters were issued in 1994 (R M 478-94-PE) under authority of the General Fisheries law (D S 01-94-PE) The limits for pumping waters are listed below However, on April 21, 1996 the outgoing Minister of Fisheries annulled these limits Currently, there are no enforceable effluent limits for the industry

	Pumping Water Limits	
Parameter	Instantaneous	Daily Average
pH	5 - 8	5 - 8
Total solids	37,000 mg/L	35,250 mg/L
Oil and grease	700 mg/L	350 mg/L
BOD	800 mg/L	400 mg/L
fecal coliforms (for domestic discharges)	2000 MPN/ 100 ml	---

Since 1994, existing fishmeal plants have been required to file Environmental Management Plans which detail strategies to improve environmental performance The PAMAs are currently under review by the Ministry although many of the fishmeal plants are proceeding with various measures to reduce emissions These efforts focus on waste minimization as well as on recovery options for individual waste streams The scope, applicability and enforceability of the measures presented in the PAMAs are still under debate

A particularly contentious issue has been the disposal of pumping water Several plants have proposed the construction of underwater pipelines and offshore discharges The status of these plans are not clearly settled at this time as authorities responsible for the marine

and environmental NGOs (Non-Governmental Organizations) have expressed skepticism about the value of these approaches

Responsibility for the marine environment is shared among several agencies including the Peruvian Navy, IMARPE, and the Port Captaincy There is no centralized agency with responsibility for marine environmental issues although IMARPE monitors Peruvian waters for environmental parameters

1 2 2 Domestic Wastewaters

Responsibility for domestic wastewaters in Peru rests with the appropriate sewerage and water authority In the Lima region, this authority is SEDAPAL promulgates discharge limitations The Industrial Discharge Regulations, D S 28-60 S A P L specify the following discharge limits for industrial users of public sewer systems

Parameter	Limit
pH	5 - 8 5
Settleable solids	8 5 ml/l/hr
Oil and grease	100 mg/L
Temperature	35 °C
BOD	1000 mg/L

There are currently no discharge limits for domestic wastewaters Indeed, most domestic and industrial wastewaters are discharged to the receiving bodies without any treatment Numerous plans and programs are currently under development to improve water quality of receiving waters by diverting discharges and/or constructing marine outfalls

1 2 3 Regulatory Implications of Feasibility Study

This feasibility study is not contingent on any current Peruvian regulations It is a conceptual report prepared at the request of the USAID to explore potential options for dealing with water quality problems along the Peruvian coast

1.3 Approach To Feasibility Study

1 3 1 Strategy

The feasibility study was designed to address treatment technology appropriate for fulfilling the following basic requirements

1) The system should represent best practicable treatment (BPT) in terms of effluent water quality, while maximizing cost effectiveness by producing recoverable products or by-products whose commercialization could help offset, or ideally cover, the cost of operating the system

2) The system should treat residual waters to such an extent that their release into the environment does not aggravate existing problems and that contributes to long-term recovery of receiving waters Since evaluation of existing pollution problems were not within the scope of this report and discharge criteria are relatively undeveloped in Peru, the evaluation uses effluent water quality criteria that in our experience can fulfill this objective

3) The system should operate with appropriate technology for current conditions in Peru Therefore the system should a) incorporate as little imported, energy-intensive or high technology components as possible, b) not require specialized personnel unavailable locally or which could not be trained locally, and c) take into account local levels of infrastructure development, including energy supply, transportation, and construction technology

4) Whenever possible, ancillary benefits in the form of enhanced natural values, tourism, etc would be encouraged

5) Financing and operational responsibilities for the system should be designed in such a way that various combinations of public entities, entrepreneurial enterprises, and dischargers could participate in the process No position has been taken on the expected or desired division of responsibility at this time

1 3 2 Assumptions

The scope of the feasibility study calls for a conceptual framework to develop the treatment options for fishmeal plants and domestic wastewaters along the Peruvian coast Other agencies and responsible parties are currently working on specific projects involving coastal pollution problems This report maintains a conceptual approach with wide applicability to different conditions and does not deal with specific situations For this reason, specific studies of wastewater composition, water volumes, or receiving body water quality were not performed Data underlying the feasibility study were based on information collected during previous work in Peru and the United States Data specific to the Peruvian fishmeal industry were based on information provided by individuals involved in the industry locally

Some assumptions underlying this feasibility report are

1) Discharges along the Peruvian coast come principally from fishmeal plants and domestic wastewater While significant pollution may originate from industrial sources, (e g in Ilo and Chimbote), these discharges are not considered in this report

2) Fishmeal discharges are much more concentrated than equivalent volumes of domestic wastewater The cumulative discharge of fishmeal wastewater may exceed 35 million m^3 of water which is equivalent to approximately 250,000 people However, in terms of pollutant load, the cumulative fishmeal industry contribution is equivalent to the discharge of between 6 and 20 million people Given that the coastal population of Peru is less than 10 million, it is likely that over half of all coastal pollution in Peru is caused by the fishmeal industry

3) Current Environmental Management Plan (PAMA) requirements in Peru demand that fishmeal plants introduce measures to reduce their pollutant discharges Two of the three main wastewater streams in fishmeal plants, the carcass-water and the stick-water, can be efficiently recycled into the system with essentially zero discharge using cost-efficient, proven technology It is assumed that individual plants have implemented such recovery, leaving only the pumping water requiring treatment

4) For the purposes of this report, fishmeal plant effluent characteristics are assumed to be as presented in Table 1 Data used for this section are based on information acquired from several sources in Peru Due to the lack of publicly available and reliable data the information used could not be independently verified Verification and adjustment of water quality data would be a major component of a pilot stage

Table 1 Effluent characteristics of fishmeal pumping water

Characteristic		Description
Volumes		2-3 volumes of water used per volume of fish landed
Plant size		The "standard" plant produces 500 m^3/hr of pumping water when under full operation (the range is from <100 to >1000 m^3/hr)
Operational period		The typical fishing season is 3-6 months of the year
Water quality	Total solids	3-7 % (depending on fish quality and freshness)
	BOD	6000-15000 mg/L
	Protein	1-2 % (total nitrogen is approximately 12% of this amount)
	FOG (oil)	1-2 %

5) For both domestic and fishmeal plants, it is assumed that sewers and connection lines are in existence and available for use Costs for sewer line connections to the treatment facility location are not included

6) It is assumed that wastewater flows and qualities will remain at their current levels Several projects are studying the application of waste minimization techniques and processes in an effort to reduce volumes and/or pollutant loads from pumping waters From a wastewater treatment viewpoint, it would generally (but not always) be easier to deal with a "cleaner" or more limited residual effluent such as would be the case if successful waste minimization techniques were introduced Most of the technologies discussed in this report can be readily adapted to such changes

1 3 3 Treatability Options

Initial examination of available water quality data established some basic issues that influenced the scope and feasibility of this report

1) *Separate approaches for domestic and fishmeal wastewater will be required* The fundamental distinctions between fishmeal and domestic wastewaters are i) that one is

saline and the other is freshwater and ii) domestic wastewaters have a public health dimension caused by the presence of pathogens which are absent from the fishmeal wastewaters The presence of the pathogens complicates the use of the domestic wastewaters as a source material for human or animal food For this reason, the processes involved in treating salt versus freshwater are sufficiently different in basic approach that each has to be presented separately

2) *The high concentration of fishmeal wastewaters calls for specialized treatment technologies* As mentioned previously, the organic and nutrient content of these wastewaters is extremely high It was immediately apparent that a technological approach to initial treatment would be necessary Indeed, most conventional wastewater treatment technologies would have a hard time treating these waters to an acceptable level at all, particularly within reasonable limits of expenditure and effort There are two possible solutions to this dilemma

a) approaching the fishmeal discharge not as a wastewater, but rather as a product stream that needs concentrating Appropriate technologies for this type of approach can be found in the food processing industry where the main concern is the product and not the residual (i e , the wastewater) The goal is to find a process where the residual meets specified criteria while recovering a commercially viable product in the process

b) encouraging continuance of the waste minimization studies currently in progress as essential to improving treatment of the residual Under this approach the minimum water quality needed for treatment would be defined It is assumed that changes in fishmeal plant processes will produce residual water quality fulfilling those needs For example, there are pumping technologies in existence that can drastically reduce the volumes of pumping water required Reductions of 90% are not inconceivable Waste minimization efforts in terms of reducing organic loads through changes in the way fish is stored on fishing boats or processed in the plant could also yield effluent of a quality and quantity that is more easily treated

3) *A flexible, compartmentalized model will be needed* There is wide variability in physical conditions between various areas along the Peruvian coast The treatment system appropriate for Pisco-Paracas (few plants in close physical proximity, plentiful level land, low population, high natural values) will necessarily be different from a system appropriate for Chimbote (many fish meal plants spread over a large area, high population, lack of open and available land)

Figure 1 presents the treatment process design chosen for the feasibility study for fish-meal wastewaters For domestic wastewater, an Advanced Integrated Waste Pond System (AIWPS) is being proposed as the most cost-effective method The domestic wastewaters present less of a challenge than that for the fishmeal discharges

The fishmeal wastewater treatment process is a flexible model which makes it possible to choose various combinations of process steps as local conditions may dictate

Two primary treatment systems are presented

a) a complete treatment involving recovery of virtually all the protein and solids in the wastewater The effluent from this process is potentially clean enough to release directly to the receiving water or it may be passed through an aquaculture step as detailed below This process yields marketable products

b) a primary pretreatment process that is contingent on internal waste minimization improvements inside the plants The treatment achievable by this system is 60-70%, which would necessitate a secondary/aquaculture step to provide further treatment It also has limitations regarding influent water quality

Secondary treatment is designed to be operated in conjunction with an aquaculture facility The aquaculture facility would receive primary treated wastewater from either of the two processes above It should also be made to operate independently by pumping seawater to dilute the waste if necessary and to operate the facility during periods when the fishmeal plant is not operational In a pilot stage the operational parameters and commercially viable species to grow will be determined

A tertiary step is also possible as a further use of the wastewater The effluent from the secondary process should be of a quality to allow direct discharge However, in certain areas and circumstances there may be the possibility of *Salicornia* production in wetlands, construction of wetlands for tourism and wildlife purposes, or the need for zero discharge through a rapid infiltration system These are presented as additional options The feasibility of these options needs to be determined on a case-by-case basis depending on local conditions

1.4 Description of Waste Streams

1 4 1 Fishmeal Wastewater

The waste streams generated by fish processing plants in Peru present some special problems with respect to treatment and disposal Figure 2 depicts, in schematic form, the typical fishmeal processes used in plants along the coast The volume of wastes per ton of processed fish and the relative concentrations (strength) of solids and organics contained within the waste stream is higher than observed in fishmeal processing plants in other parts of the world The primary fishing industry in Peru is centered around processing plants which produce fishmeal derived primarily from anchovies The fishmeal is exported as a high quality, high-protein animal feed

Data on "typical" wastewater presented here is based on information from various individuals and organizations connected to the fishmeal and environmental industries in Peru Little reliable public data on quality and quantity of fishmeal wastewaters is available Some of

the numbers may appear questionable, but represent the best data available for this report A primary goal of any pilot stage would be the acquisition of information on quality and quantity of Peruvian fishmeal plant wastewaters

Figure 1 Generalized Process Diagram of a Fishmeal Plant

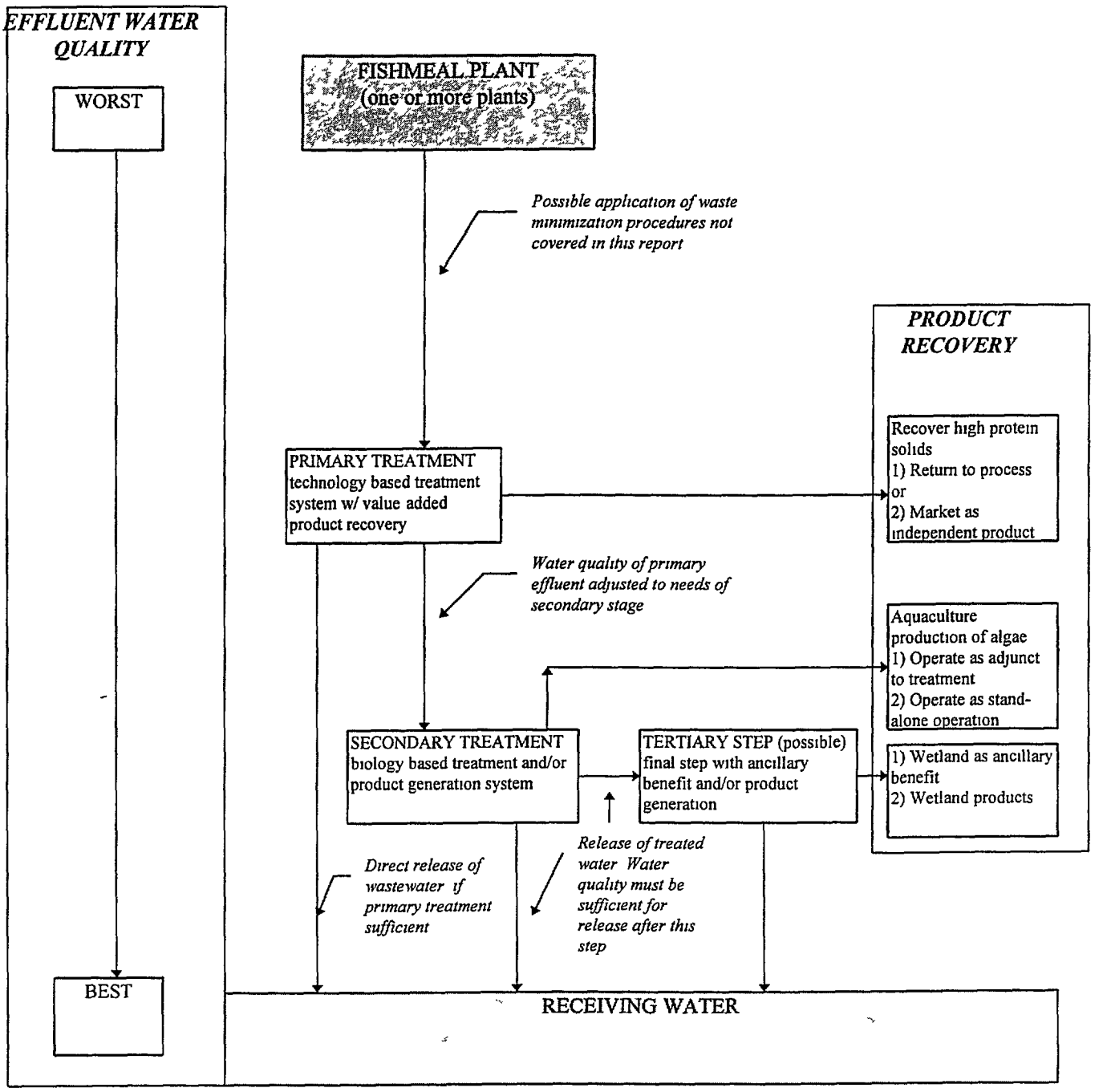

Figure 2 Typical fishmeal plant process design

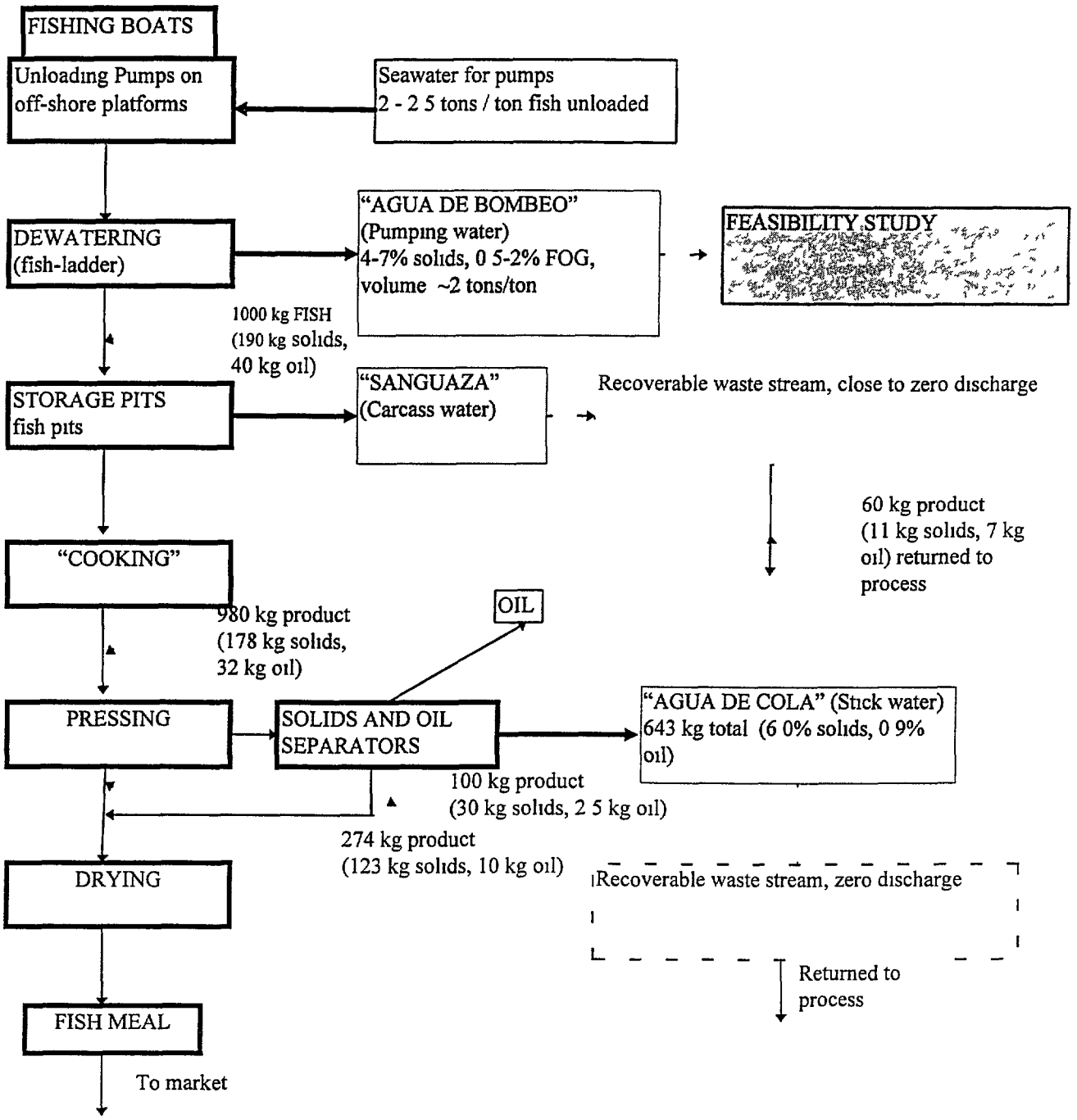

The high waste volume per ton of product can partly be explained by examining the type of fish delivery and off-loading systems used at most, if not all, of the plants in Peru The ships do not generally have refrigeration units (which dewater and chill the catch) The ships are unloaded using offshore pumping systems which use seawater to slurry the fish into the processing plant Subsequently, the initial processing step in the fishery is dewatering using fish ladders which in turn create a waste stream referred to as "Agua De Bombeo" (i e , pump water) With refrigerated ships fish are offloaded using mechanical conveyance systems which drastically reduce the volume of wastewater generated at this point in the processing plant

Following offloading and dewatering, the catch is usually held in storage tanks for processing The liquid residue from these tanks (called "Sanguaza") is also a waste stream If not recovered through coagulation, must be disposed along with the primary waste stream (Agua de Bombeo) To derive fishmeal, the fish are cooked using steam and conveyed to presses to reduce the water content of the meal The liquid byproduct from this process is generally referred to as "stickwater" or "Agua De Cola" This by-product can also be recovered using oil and solids separators to derive fish oil with the solids being returned to the head of the processing facility If no recovery is attempted, this waste stream must also be disposed of with the Agua de Bombeo and the Sanguaza

1 4 2 Domestic Wastewater

1 4 2 1 Seawater Disposal of Domestic Wastewater

Discharge of raw domestic sewage to the sea can cause aesthetic and odor problems and impact human hygiene and health It can deplete oxygen and result in toxicity to fish and invertebrates Eutrophication of bays and enclosed waters may occur through widespread overgrowth of phytoplankton and seaweeds This can ultimately affect settling of larval invertebrates As a consequence of this chain of interacting factors, the diversity and productivity of the sea in an area larger than the immediate vicinity of the outfall can be impacted At a minimum, it constitutes a substantial waste of fresh water and nutrients, both of which are potentially reclaimable

Biologists familiar with the marine environment have suggested that a dilution of 1 part sewage to more than 10,000 parts seawater may be necessary before the effects described above would remain undetected Regardless of the theoretical dilution required, however, floatable solids from wastewater (such as plastics and grease) will collect on the sea surface and find their way to adjacent or distant shores Similarly, much of the waste settleable material will find its way to the sea bottom in the outfall vicinity and will disrupt sealife patterns To accomplish fail-safe dilution of wastes with 10,000 parts of seawater requires a costly outfall and diffusion system which is vulnerable to storms and seismic activity For this reason, it can be economical to treat sewage to a point where it may be reclaimed With such treatment, it may be utilized as a resusable resource for industry and agriculture

1 4 2 2 Land Disposal of Biosolids

Although most waste treatment processes have been designed with the objective of improving water quality, preventing toxicity to fish and wildlife, and removing nutrients which may be harmful to receiving waters, many processes fall short because they either become overloaded or are improperly designed and operated

The use of sewage effluents for direct irrigation of food crops, while beneficial in terms of water and nutrients, can be potentially dangerous While immunization or treatment of typhoid fever, cholera, and several other sewage transmitted bacterial diseases is now often feasible, many of the helminth (worm), amoeboid, and virus infections such as hepatitis can be transmitted by improperly disinfected sewage The shorter the time that elapses between treatment of the wastewater and its reuse, the higher the probability that it will convey viral, bacterial and parasitic diseases

Because activated sludge is a relatively quick process, it has a high probability of disease conveyance should disinfection fail Systems which depend entirely on chemicals for disinfection are vulnerable to both human and mechanical failures

Regardless of the intended use, any plan to dispose of treated wastewater solely by means of irrigation presents a long-term storage problem In arid regions such as coastal Peru, the need for irrigation water reaches its peak in mid-summer whereas the production of wastewater remains about constant or increases during the mountain rainy season - a time when the soil will not accept large amounts of water Continued spraying of sewage on forest and grasslands as an alternative to storage can be a problem if the hydraulic loading rate exceeds the retention capacity of the land The rapid runoff from sprayed areas, which can occur during a rain event, can carry organisms, organic matter, nutrients and toxicity into nearby water courses and reservoirs An adequate treatment system should include complete wet weather storage

2. TREATMENT TECHNOLOGIES

2.1 Fishmeal Wastewaters. Primary Treatment By Protein Recovery

2 1 1 Introduction

Raw pumping water has a high concentration of biological solids If all or most of the solids are recovered, the remaining water may have a quality adequate for further treatment or possible direct discharge The following section describes a technology that treats the wastewater as just such a product stream The output from the process could be a wastewater treated with up to 99 6% efficiency (adequate for immediate release), while recovering sufficiently high protein product to allow profitable operation This technology, termed "Protein Cold Rendering" recovery, is a proprietary process developed by a U S waste treatment company

Poultry Processing Waste Water Discharge Treatment System

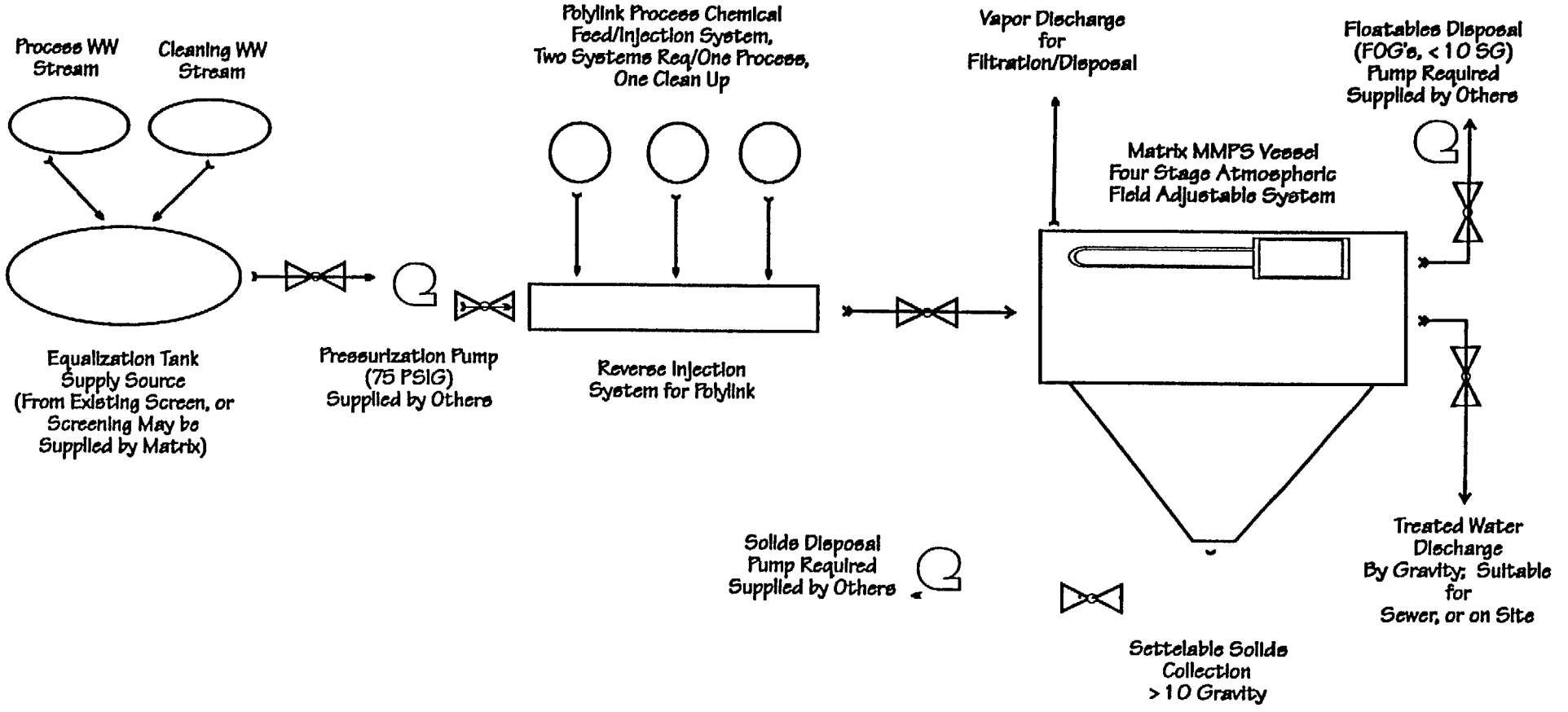

FIGURE 3

Matrix Design
Innovation in Waste Treatment & Recovery Systems

Post Office Box 2702
Spring, Texas, 77383-2702 Telephone 713-292-3827

Project Poultry Processing Discharge Sewer Pretreatment System	Date 01/92

Copyright 1992 Patent Applied For, All Rights Protected

2 1 2 Process Design

Figure 3 presents a conceptual diagram of the cold rendering system as it would appear in a full-scale facility

2 1 2 1 Conceptual Design

The system consists of an *equalization tank* where the wastewater is collected, passively pre-screened and released in a controlled stream The wastewater is pumped using a 75 psig pressurization pump to the two stage *reactor tank* In the first stage, the wastewater is treated with two proprietary enzyme based chemicals whose function is to *emulsify* proteins, oils and other organics in the wastewater mix The exact amounts of emulsifier used are dependent on the characteristics of the waste The emulsified waste is passed to the second stage of the reactor where an additional three chemicals are added These chemicals affect the *surface tension* of the emulsified particles, making them amenable to separation by gravity settling The purpose of this step is to produce particles of uniform settling characteristics

The cold rendered and surface tension treated waste is then passed to a passive *gravity separator* where the product settles Any remaining floatables are removed by skimming and pumping The water is pumped to the next stage Depending on local conditions and discharge requirements, the wastewater may be filtered and released to the receiving waters or released to a secondary stage (in this case an aquaculture step)

Efficiency of the system is reportedly high In the treatment of process wastes from the poultry industry, removal efficiencies of 99 6% were possible with wastewater streams containing up to 20% solids This level of efficiency would produce a treated wastewater almost adequate for release directly to receiving waters (BOD of <400, nitrogen of < 90) This quality would be adequate for use in an aquaculture system

The solids recovered from this process consist of a dewatered slurry of high protein content Salinity of the product is low since the settling process is independent of the water salinity This product is potentially a valuable commercial product, usable as animal feed worldwide According to preliminary calculations, developed by the equipment manufacturer, there is a 75% gross profit potential in operating this system (although initial investment is fairly high)

The process is self contained, has low energy needs, and requires minimal supervision The system is sold as a pre-packaged unit that is then installed on site Power is generated by diesel generators However, most of the processes are passive and require little energy input Overhead and operational costs are low The main issue associated with this process turns out to be the prompt collection and disposal of the product, given the large amounts generated

Process chemicals are proprietary and would need to be imported from the U S The use of this system implies that there will be a continuing need to acquire the necessary chemicals from the U S proprietor It is unlikely that the necessary products can be made available in Peru

Since the system cannot operate without these additives, timely and reliable importation is a necessity

2 1 2 2 Considerations for Pilot Plant

The optimal design for this type of process needs to be customized to the wastewater in question This requires fairly extensive pilot testing to allow the design and construction of a unit able to perform to specifications The pilot plant would include a series of needs to characterize wastes according to particle distribution, digestibility index, carbohydrate content, etc The pilot would include the following steps

1) Pre-screening of wastewater using three levels of stand alone passive screening devices This would operate over an extended period to get a picture of raw water characteristics in terms of particle size and flow characteristics

2) Chemical injection stage, where a variety of "recipes" for the injection of chemicals would be tried so as to maximize the value of the resulting product Three sets of pumps would be needed to allow a full set of experiments

3) A mobile separator/settling chamber mounted on skids which is field adjustable to optimize settling characteristics

The pilot unit comes pre-assembled from the U S on four skids and would be operated for 90-120 days (i e a full fishing season) to obtain the necessary data The unit can be mounted within a few days

2.2 Fishmeal Wastewaters: Primary Treatment By Physical Treatment

2 2 1 Introduction

The cold-rendering protein recovery process discussed previously has two major drawbacks 1) it is fairly high-technology and dependent on imported material from the U S , and 2) it has pilot study costs which are potentially high The primary advantage of the process is that it can deal directly with existing wastewater conditions

By comparison, conventional processes under current conditions are unlikely to provide complete treatment The ultimate degree of treatment will depend to some extent on the success of any waste minimization efforts initiated within the plants Even after such waste minimization efforts, it will still be necessary to deal with a residual wastewater This wastewater may be dealt with using the conventional physical processes as described in the following section As noted previously the currently available data on wastewater quality and quantity lacks confirmation Actual water quality in some places and at some times may be of a quality that will yield adequate effluent by the process described below The application of waste minimization efforts

in the plants may also improve the influent water quality substantially A physical treatment process may in such cases represent an effective and cost efficient approach, even though the "worst case" wastewater may not be amenable in a cost-efficient manner to the application of this process

2 2 2 Pretreatment Processes

The specific unit processes mentioned earlier for the pretreatment phase of the pilot plant are illustrated below and are discussed in detail in the succeeding sections

A Fishery Waste - Pretreatment Processes

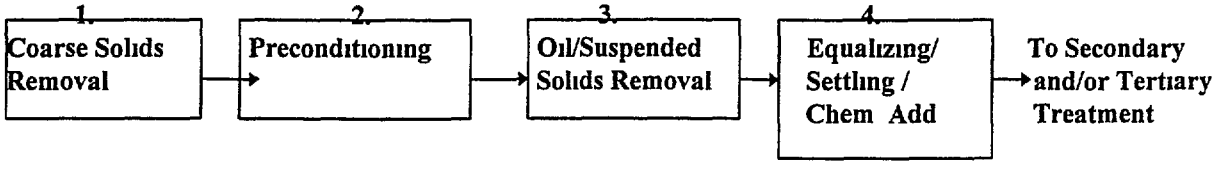

2 2 2 1 Coarse Solids Removal

There are many ways to remove coarse solids from an industrial waste stream ranging from simple barscreens to highly automated, mechanical systems For the purposes of this study, a non-mechanical static screen (hydra sieve) will be proposed for the pilot plant This screen does not require power or chemicals for removal of coarse solids This type of screen does, however, require manual removal of the material on the screens for ultimate disposal The system consists of a slanted screen with narrow openings positioned horizontally in a prefabricated structure The flow is directed over the screen and falls through the openings leaving the coarse solids trapped on the slanted surface The surface is pitched to be self cleaning in most situations The hydra sieve can be sized with screen openings which are appropriate for the solids in the wastes being handled Figure 4 depicts a schematic cross section of the unit and the screen

Figure 4 Solids removal unit

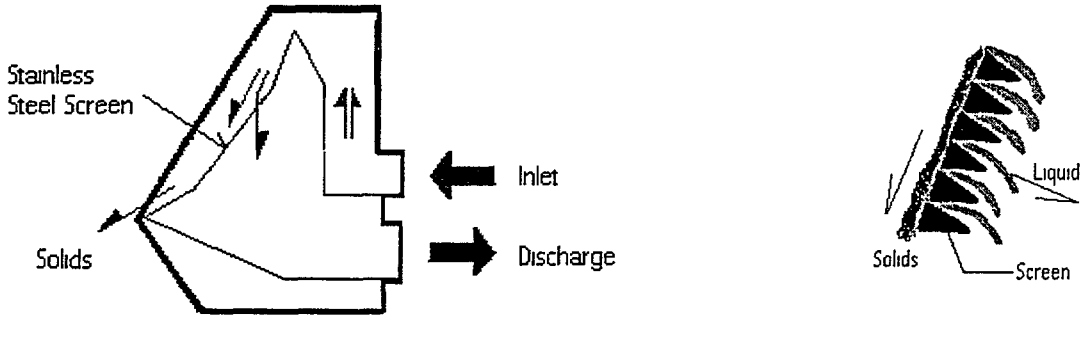

Static Screen

The physical dimensions of a standard unit sized for the pilot plant would be approximately 0 5 m wide by 1 5 m tall and 1 3 m deep The weight of this unit, which is fabricated from 304 stainless steel, is 160 kg The anticipated cost of a new unit with a 4 7 l/s maximum capacity is US$ 4,500 00

The removal efficiency of the system relative to coarse solids will depend upon the sizing of the screen openings There would also be some suspended solids removed as a result of being trapped by the more dense solids on the screen The solids which are captured and removed by this system may be usable as fertilizer or chicken feed depending upon the level of salinity If it is found that it contains too much salt, it may be possible to rinse or wash it to remove some of the salinity allowing its use

2 2 2.2 Preconditioning

The next major step in the process is to reduce both the suspended solids and oil /grease content The oil and grease can be reduced most efficiently when it is preconditioned prior to the removal step Preconditioning can be accomplished through mixing and/or air injection For the pilot plant, preconditioning can be accomplished most cost effectively using a vessel which mixes the effluent in a manner which breaks down emulsions and suspensions This allows for easier separation of the oil and grease from the water when used in a plate type coalescing separator unit A pumping system is required to force the flow through the preconditioning vessel which consists of a 4 inch diameter tube with internal chambers The pressure required of the pumping system is approximately 60 lbs (psi)

The costs of the pumping and preconditioning system are estimated at US$ 2,500 00 and US$ 3,500 00, respectively The pump and appurtenances could be purchased locally with the preconditioning vessel being supplied by a U S concern The weight of the unit is estimated at 90 kg

2 2 2 3 Oil and Suspended Solids Reduction

A packaged unit which provides the means for both processes to occur within the same system is the most economical method of reducing oil and suspended solids in the pretreatment process There are several industrial units available and one in particular which should function well in this application It is a non mechanical, "Slant Rib", coalescing oil/water separator which has a lower chamber for solids removal The slant rib portion of the unit resembles a tube or lamella plate type settling unit used in the water treatment industry Waters enter a dispersion chamber which spreads the flow out over the face of the ribs The flow must pass these ribs to exit out the far side of the unit Due to the configuration of the ribs, oil tends to coalesce and rise while suspended solids settle out The unit contains chambers to accumulate both the oil and solids which are captured A schematic is provided in Figure 5

Figure 5 Oil and solids coalescing separator

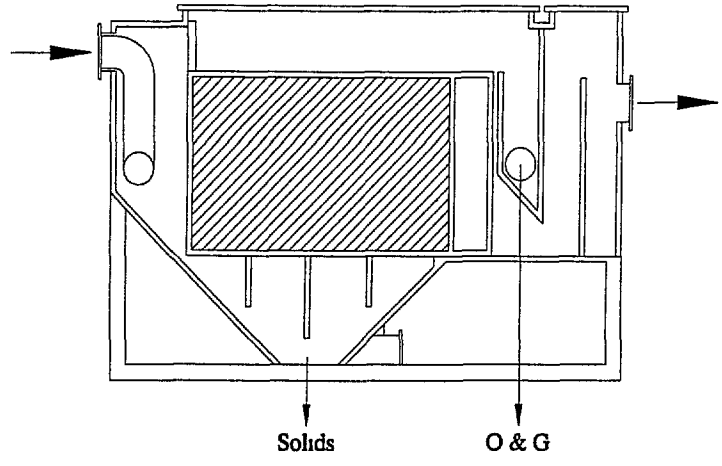

This system can be obtained as a packaged unit and shipped to the site of the pilot plant A system which can handle up to 3 1 l/s would cost roughly US$ 8,500 00 and would weigh approximately 840 kg The physical dimensions are 1 8 m tall by 2 6 m long by 0 8 m wide

The anticipated removal efficiencies of this system would include 50 to 60% oil and grease removal and 60 to 85% suspended solids removal Actual removal rates will depend upon site specific conditions as well as the performance of the preceding process steps in the system

2 2 2 4 Flow Equalization/Settling/Chemical Addition

The last step in the pretreatment process involves a passive, non-mechanical holding basin which can be used for several purposes These include flow rate leveling, holding, solids settling and further conditioning using chemicals if needed to improve the turbidity of the treated effluent prior to introduction into the aquaculture chambers This holding basin would amount to little more than a deep lagoon lined with synthetic materials to inhibit exfiltration and an internal baffle to enhance the settling characteristics of the basin The lagoon should be rectangular on a 2 1 ratio with a depth of about 3 m and provide at least 24 hours of detention At a pilot flow of 75 to 150 m^3/d, the floor dimensions of the lagoon would be roughly 3 5 m wide by 5 m long with surface dimensions of 21 m by 24 m assuming 3 1 side slopes

The synthetic liner material would cost about US$ 5 40 per m^2 or a total of approximately US$ 3,500 00 The internal floating baffle would cost about US$ 132 00 per meter or US$ 3,000 00 for the lagoon described The lagoon construction can be done by local labor The volume of excavation will vary depending upon the site but should not exceed 610 m^3 of material for a pilot study

2 2 2.5 Summary

The four steps described in the previous paragraphs are necessary to provide a waste stream that is pre-conditioned sufficiently to allow the aquaculture chambers to grow selected algae species, further reduce the organic content of the water, and provide a pre-treated effluent for discharge to wetlands or infiltration disposal systems

The cost of purchasing the equipment necessary to construct the conventional pretreatment portion of a pilot system is summarized as follows

Item		Cost	
1	Static Screen	$ 4,500	
2	Pumping System	$ 2,500	
3	Preconditioning Vessel	$ 3,500	
4	Coalescing Separator	$ 8,500	
5	Equalization Lagoon	$ 6,500	
6	Miscellaneous Piping	$ 1,000	
	Subtotal		**$26,500**
	Contingencies (15%)	**$ 4,000**	
	Pretreatment Equipment Costs		**$30,100**

This is a raw equipment cost and does not provide for shipping, duties, labor for installation and any mark up costs for contractor profit Allowances must be made for those items in the final budgeting process Figure 6 shows the process design of the proposed treatment system

2.3 Fishmeal Wastewaters: Secondary Treatment / Aquaculture

2 3 1 Introduction

Aquaculture techniques have been used for centuries to produce valuable products from marine and freshwater environments Most cultures have experience in improving the yield of aquatic organisms through intensive culturing methods Aquatic plants, articularly seaweeds and algae which have historically been popular as food sources, have also been subjected to culturing Technology ranges from extensive and low-tech passive grow-out ponds and impoundments to modern high-tech systems dependent on sophisticated biotechnological manipulations and environments

Of the many aquaculture possibilities, it was decided to focus on plant aquaculture which fulfills a basic requirement for feasibility, i e a potential resource and a positive contributor to the wastewater treatment process Animal, or secondary, aquaculture was considered early in the process There is a thriving worldwide industry focused on the aquaculture of various fish species, shrimp and prawns, and molluscs such as clams and mussels However, in terms of the current project this type of aquaculture presents several drawbacks

1) Secondary (animal) aquaculture is by its nature a net waste generator, as animals tend to produce more waste products than they consume Therefore the addition of a secondary aquaculture step would provide no net treatment value Although this may not be a major drawback if such an aquaculture operation generates adequate value-added, the potential contamination issues resulting from secondary aquaculture operations are an issue that needs to be addressed separately from the fishmeal treatment process

2) There is a limited range of organisms suitable for aquaculturing in the cold waters of the Peruvian coast Species which are suitable, such as clams and mussels, have long lifecycles measured in years Cold water fish species that have been frequently cultured, such as salmon, also have long lifecycles and complex aquaculturing needs

3) The intermittent nature of the discharges speaks for using fast growing organisms that can yield harvestable and marketable products within the operational cycle of fishmeal plants Since most secondary aquaculture species have relatively long lifecycles, particularly in colder waters, it would be much harder to extract maximum value-added within the allowable fishmeal timeframe which is measured in a few months

The use of secondary aquaculture as an adjunct to the treatment system represents a possibility for the future In the current report focus has been maintained on the initial steps that will achieve desired results The timeframe for the entire project may well be quite long term, however, such that the introduction of a secondary aquaculture step might well become interesting at later stages

Over 100 species of algae have some sort of economic importance in the world This number is increasing as more new natural products with medicinal or other interesting properties are identified in more and more species Traditional uses of algae as food or fertilizer is growing in Pacific Rim societies that historically treasure algae as food In Western countries the high nutritional value of algae is becoming better recognized As a result, demand for algal products is growing

The term algae encompasses a multitude of species ranging from unicellular plants to large kelps which grow as marine forests For the purposes of this study the most important division is between micro- and macroalgae Microalgae are unicellular species which form the primary constituent of phytoplankton in both marine and fresh waters They are small, fast growing single-celled or filamentous organisms Most spend their lives floating freely in the water column The macroalgae are larger, multicellular plants that are popularly known as "seaweeds" They are ubiquitous in the oceans but rare in fresh water environments They can have life stages and ecological requirements and usually exist as "rooted" organisms The macroalgae are generally subdivided into major groups based on their color, e g , the green algae (such as the sea-lettuce *Ulva*), the brown algae (such as the kelps *Macrocystis* and *Laminaria*), and the red algae (such as *Gracilaria*, and *Gelidium*) The green algae are the only fresh water forms

Another prominent group are the "blue-green algae" These are more closely related to bacteria and are properly called Cyanobacteria They are mostly unicellular or simple filamentous plants with lifestyles similar to other phytoplanktonic algae Since some of these are of potential interest for the present study, they are discussed with other algae

Like all plants, algae grow by photosynthesis They extract nutrients and carbon dioxide from the surrounding water and, with the help of sunlight, transform this into plant tissue and oxygen Carbon is available as dissolved carbon dioxide in wastewater as are the nutrients, nitrogen and phosphorus

2 3 2 Products from Algae

2 3.2 1 Food

Many algae are rich in protein (up to 60%) and vitamins (100 g of dry algae will fulfill virtually all daily vitamin requirements except for Vitamin C) However, with the exception of *Porphyra*, a large part of the proteins are insoluble and therefore indigestible (up to 75% of their dry bulk)

The main food crops among the macroalgae are varieties of kelp *Porphyra* (Figure 7) is an important food crop in Japan but is also consumed throughout the Far East and Europe It has been cultured for many centuries by "seeding" nets which develop a flora of kelp while suspended in the ocean from buoys Within 40-50 days the algae can be harvested Extensive biotechnological improvements for this species have been developed, and advanced processing techniques are now applied to prepare the product The high concentration of soluble protein in *Porphyra* make them among the most attractive as food products

Other edible kelp which have found large scale use include *Laminaria* (from which "kombu", a dried and pressed product used as soup base, confectionery and tea in Japan, is prepared) and *Undaria* (eaten in the form of "wakame" chips) They are cultured in Japan and China where they are grown on floating rafts, stones or sunken concrete blocks and harvested after a year Natural recruitment occurs as spores germinate on the stones The algae are dried on the beach and then boiled in copper vats, pressed and shredded These kelps are not of interest for the current project

Other species of both green and brown algae are consumed in various countries although little information exists regarding any aquaculture experience Some species have high potential commercial value as they are fairly rare in markets and have to be harvested manually from the wild The green alga *Ulva* (Figure 8), which grows in many marine habitats including Peru, is worth US$60 per kg in the Japanese market according to our information It is therefore of some interest for the current project

There is growing interest in the use of microalgae as food sources Most of this interest has focused on *Spirulina* (Figure 9), a common blue-green alga with high nutritive value Up to

Figure 6 Summary of the process design of the proposed primary treatment system

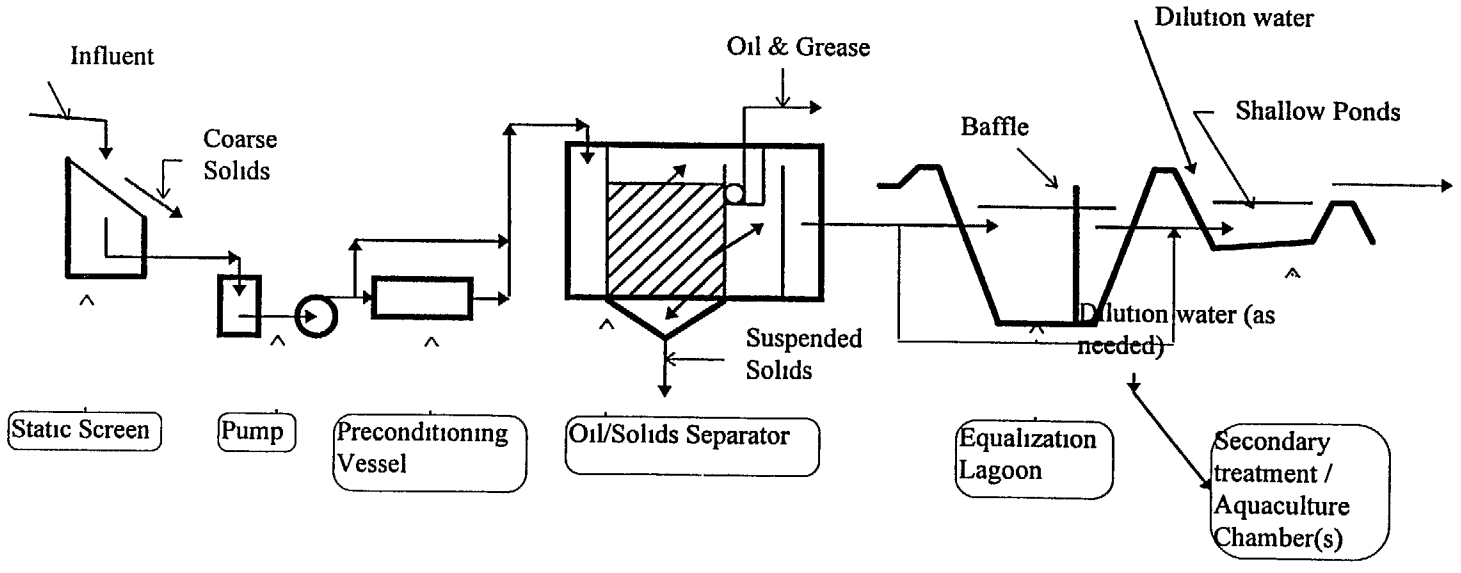

21

70% of its dry weight may be protein *Spirulina* has historically been consumed in both the Old World (Lake Chad in Africa) and the New World (the Aztecs of Mexico) *Spirulina* has two major applications a) as an easily grown high protein food-supplement that can be cultured with minimal technology in Third World countries, and b) as a health food supplement with possible therapeutic properties and sold in Western health food stores It may also be a potential source of phycocyanin

Private companies specializing in aseptic high-tech aquaculture of *Spirulina* produce concentrates and pills sold to health food stores *Spirulina* culture is feasible under primitive conditions, however It grows well in wastewater high in nitrogen as long as salinity is kept above 20 ppt and alkalinity (i e inorganic carbon) is added to the water The alga is tolerant of sunlight, high temperatures, and changes in salinity thereby, making it suitable for low technology and minimal resource environments

Virtually all algae considered commercially viable food sources are from saline environments (whether the sea or saline inland waters) Few algae from freshwater sources have been developed as food sources although the nutritional potential is present An exception is *Chlorella,* a ubiquitous freshwater green alga that is known to be nutritious and easy to culture, but has so far eluded popularity as human food

2 3 2 2 By-products

Algae produce by-products that have commercial applications One class of chemicals, the phycocolloidal polysaccharides, are of major economic importance This class includes algin (from *Macrocystis* and *Laminaria* kelp), agar-agar (from the red macroalgae *Gelidium cartilagineum* and *Gracilaria confervoides*), and carrageenan (from red algae of the genera *Chondrus, Eucheuma* and *Gigartina)* These substances have gel forming and water binding properties that make them highly useful in controlling crystal formation in ice, for stabilizing emulsions and suspensions, and as solidifying agents in foods and cosmetic products All are produced from large macroalgae of limited potential for the current project, with the possible exception of *Gracilaria* The microalga, *Porphyridium*, may also be a source of carrageenan and of interest for this project

b-Carotene has been extracted from the blue-green microalga *Dunaliella*, a native of hypersaline environments (salt pans, coastal salt flats, and desert lagoons) A number of aquaculture projects have been established to explore the potential of this species In high-tech experimental raceways, up to 2 g/m^2/day of *b*-carotene has been produced for a value of over $800 per kg (Gudin 1980) The species is of interest for this project as it grows in saline environments where no other product is viable

Other products of interest have been extracted from algae In the 1970's, when oil prices were expected to reach $60 per barrel by 1990, interest in hydrocarbon production from algae developed The freshwater microalgae, *Botryococcus* and other species were investigated for their hydrocarbon potential With the collapse in oil prices, the economic stimulus for this research has diminished

Figure 7 *Porphyra* sp , the principal food source among the kelps

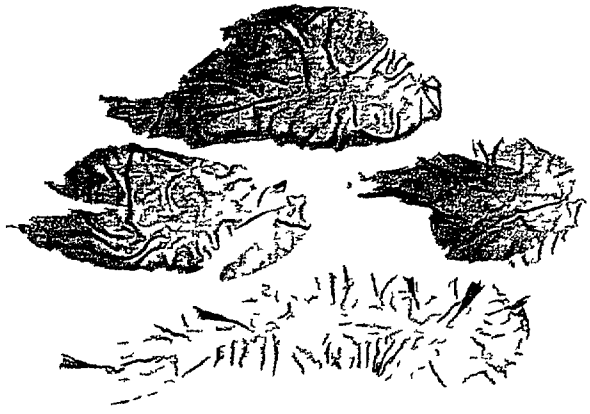

Figure 8 *Ulva lactuca* the "sea lettuce' growing on rocks and gravel in intertidal areas

Figure 9 *Spirulina* filaments

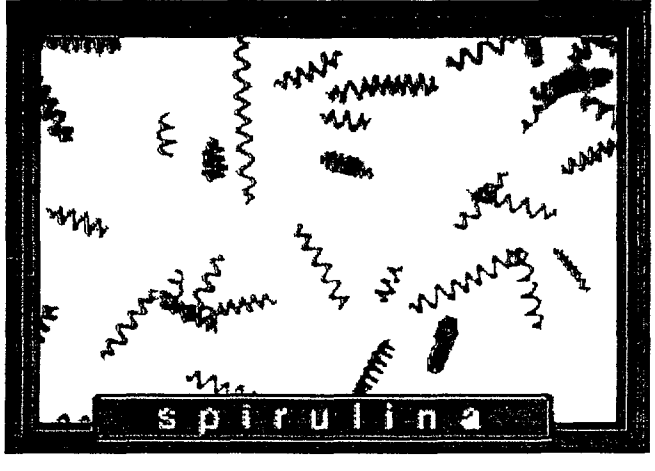

2 3 2 3 Fertilizer

Seaweeds in general are an excellent source of nitrogen and potassium, but often deficient in phosphorus One ton of marine seaweeds contains 181 kg organic matter, 16 kg salt, 5 kg nitrogen, 12 kg potash and 0 9 kg phosphoric acid In addition hormones and chemicals exist in many seaweeds that may stimulate plant growth There is some evidence for improved yields when fertilizers with added seaweeds are used In coastal areas the fertilizer may be added directly as wet, green manure, although for inland purposes it is generally applied dried, as a liquid extract or as ash Freshwater algae are likely similar in nutritional content, except for the lack of salt Mass cultures of mixed algae, as in oxidation ponds or waste treatment facilities, may be suitable for this purpose as little specificity is required in the growth phase

2 3 2 4 Animal Feed

A substantial fraction of harvested seaweeds in the Far East is ground into a meal that is used as an animal feed The preparation is simpler than human food preparation, involving drying to 15% moisture, chopping, grinding and packaging When mixed with ordinary animal feed it is an excellent poultry and cattle feed This is another use for which the mixed mass cultures of algae from freshwater oxidation ponds are directly suitable The algae from these ponds is dried and pressed to produce animal protein feed concentrate or applied directly as green manure

2 3.2 5 Pharmaceutical and Biomedical Uses

The cutting edge in algal research is the identification and isolation of metabolic by-products that may possess valuable biomedical applications Some algae are historically known to have pharmaceutical properties and are used in indigenous cultures as traditional medications Examples are the vermifuge capacity of *Digenea simplex* and the apparent antiviral properties of some kelps which have long been applied as a cure for "cold sores"

There is currently active research in this field and it can be expected that interesting new discoveries will be made Production of these substances through aquaculture may provide a high value-added by-product from the secondary treatment step Table 2 presents a summary of some of the more interesting developments in biomedical uses of algae and other marine organisms

The development of a viable commercial production of these by-products is still some way off However, it should be noted that the availability of aquaculture facilities, as will be the case in the current project, provides an easily adaptable environment to focus on producing species with most value-added It is likely that the highest value-added in the future will be associated with medical applications of the types described

Table 2 A summary of biomedical uses of algae and other marine by-products

PRODUCT OR EFFECT	SOURCE AND USE
Neurotoxins and cytotoxins	Powerful toxins called tetrodotoxins are derived from various organisms, including algae belonging to the dinoflagellates (whose toxins are called brevitoxins) These toxins have found use in neuropharmacology as chemical tools in research on the nervous system
Antitumor compounds	Substances called didemnins (derived mostly from sponges and ascideans) appear to have a strong antitumor effect
Tumor promotors	Protein kinase isoenzymes (called PKC) have shown effects astumor promotors of use in biomedical research The alga *Lyngbya* may represent a source for these
Antiinflammatories	Arachidonic acid metabolism and eicosanoid biosynthesis in many marine organisms serve as chemical regulators of biochemical processes They are a potential tool in the development of anti-inflammatory drugs and serve as useful biochemical probes in research
	Of special interest due to their interesting compounds are the blue-green algae *Lyngbya)* and *Schizotrix*, and the kelp *Laminaria sinclairii*
Bioactive polysaccharides	The best known polysaccharides are the commercially used agars, carrageenans and algins These and other algae derived polysaccharides also exhibit interesting biomedical activity
	Porphyridium produces polysaccharides called PUFA and EPA that have potential applications as base for prostaglandin manufacture and cholesterol lowering agents *Haematoccoccus* is a potential source of astaxanthin although still at the research stage Other potential by-products from macroalgae include additional phycocolloids from *Furcellaria, Gloiopeltis, Porphyra* and others
	Carrageenan and other polysaccharides may also have antiviral, anticoagulant, antitumor, cholesterol lowering and immune system regulating functions which arecurrently being researched
Stomach disorders	Marine algae belonging to the genera *Chondrus, Gracilaria, Gelidium* and *Pterocladia* have been used for stomach disorders with interesting results

2 3 3 General Conditions for the Aquaculture of Algae

The traditional approach for algae aquaculture has been, and remains, the recruitment of spores onto nets, sunken rocks or ropes, the suspension of these growth devices in the open sea or large coastal impoundments, and the eventual harvest of the alga All macroalgae cultured this way require plenty of space and clean water Regeneration occurs by artificial seeding with improved varieties or through natural recruitment Previous experiments to grow *Gracilaria* in ponds is of interest to this project although most research has focused on improving the marine impoundment process This work has originated in Japan and China Work done by Dr John Ryther and Dr Brian LaPointe at Woods Hole, Massachusetts in the 1970's showed that *Gracilaria* can grow well in ponds and raceways exposed to treated wastewater

For the purpose of this study, the approach of most interest is the mass culturing of algae in ponds or raceways Attempts to commercially produce algae in ponds have been ongoing for over 30 years However, in spite of the recognized potential to produce valuable by-products, a viable commercial industry remains practically non-existent An important reason has been the difficulty in transferring experiences from lab culture of algae to full-scale applications in outdoor environments Problems that need to be overcome include

1) Maintaining the desired species and avoiding displacement by invader species
2) Achieving uniform quality, particularly when the desired product is a biochemical by-product
3) Maintaining optimal growth rates under varied water quality and climatic conditions
4) Infections and diseases and grazing by protozoa and zooplankton
5) The high cost of harvesting, product handling, chemicals and energy needs For the last 40 years, energy has been the primary problem making full-scale algal culture prohibitive in cost

There are two possible approaches to addressing these issues a) a "high-tech" track, involving closed raceway systems with controlled environmental parameters, or b) a "low-tech" track, focusing on hardy or tolerant varieties which can thrive in sub-optimal conditions or in unique environments Previous work along these lines has been with microalgal species which are easier to manipulate and have more rapid growth rates

In the "high-tech" track reactors which allow unlimited sunlight access and controlled, predator free environments are used Most economic calculations on microalgal aquaculture are based on this type The species grown are varieties with potential for high value added by-products such as *Porphyridium* and *Dunaliella* Even so, work remains at the pilot stage although commercial production of *Spirulina* for health-food applications is at a commercially viable stage

The "low-tech" approach involves using species that grow well under difficult conditions and still produce value-added products In general, these algae are grown for their biomass (i e , as food sources) rather than for other by-products (e g , pharmaceuticals)

Large scale monospecific cultures of algae are limited to species which can outcompete invading species and avoid grazing by zooplankton and protozoa Growing salt-tolerant species in water of a salinity that eliminates competition and predation can facilitate success of such cultures Two such species, *Spirulina* and *Dunaliella*, require salinities of >20 ppt for optimal yield

Dunaliella, which is grown for it's *b*-carotene content, requires a steady but not excessive nitrogen supply, moderate salinity, and a well mixed environment where sunlight is neither limiting nor inhibiting If conditions are suboptimal, *Dunaliella* biomass may be excellent but its *b*-carotene content may be low This is especially true if nitrogen levels are too high

Experiences with *Dunaliella* indicate that under controlled and preferably closed conditions, this species may develop into a viable alternative to alfalfa as a carotene source, particularly in hot desert climates

2 3 4 Species to Consider for Aquaculture

A characteristic of fishmeal wastewaters is their seasonality Since flows only occur during part of the year, aquaculture species need to produce a viable harvest in a short time Many micro- and macroalgae have harvest cycles measured in weeks The red macroalga, *Gracilaria* (Figure10 and 11), can reach a productivity of 40 g/m^2/day A suitable microalga like *Spirulina* achieves 10-15 g/m^2/day In a month, 0 3-1 5 kg/m^2/day nitrogen uptake for *Spirulina* and up to 4 kg/m^2/day for *Gracilaria* is conceivable Table 3 summarizes the choice of algae for evaluation as aquaculture species

Table 3 Relative advantages and disadvantages of species of interest for aquaculture

SPECIES	ADVANTAGES	DISADVANTAGES
Mixed microalgae mass culture	* Rapid biomass growth * Rapid nitrogen uptake * Proven oxygenation capacity	* Nonspecific Low value-added use limited to fertilizer and possibly feed
Spirulina	* Growth parameters relatively well defined * Grows well in high load wastewaters * Highly nutritious algae with high nitrogen content/uptake * Tolerant to fluctuating environmental conditions	* Relatively low value-added primary use as feed, secondary use as human food supplement
Dunaliella	* Growth parameters relatively well defined * *b*-carotene by-product has high value added * Grows well in high salinity environments, high temperatures and intense sunlight * Previous Peruvian experience	* Byproduct production (but not total biomass) very sensitive to excessive nitrogen concentrations * By-product extraction resource intensive
Porphyridium	* High value added by-products such as carrageenan and other phycocolloids * Grows in marine environments	* Knowledge of environmental requirements on research or pilot stage * Little knowledge of growth parameters in wastewater situations * By-product production sensitive to sub-optimal conditions * Requires resource intensive by-product extraction
Ulva	* High value added as a food export * Locally abundant in polluted coastal areas * Use as food product probably requires little processing	* As sessile macroalga may require recruitment and rooting structures complex growth and management cycle * Little known about pond/raceway production * No local market
Gracilaria	* Rapid growth under good conditions * Known to grow in secondarily treatedwaste water * By-products of high value (agar-agar, other phycobiliproteins) * Agar-agar by-product has established world market	* Pond/raceway culture experiences limited * Production of by-products under waste-water conditions little known * As sessile macroalga, may require recruitment and rooting structures complex growth and management cycle * May require resource intensive by-product extraction

2 3 4 1 Macroalgae

In the current study two, genera of macroalgae are included for evaluation *Ulva* and *Gracilaria* *Ulva* is commonly known as "sea-lettuce" and grows abundantly along the Peruvian coast It is especially noticeable along the shores of polluted bays, suggesting that it thrives in eutrophic, high-nutrient conditions

Ulva has its primary use as animal feed A thriving market exists in the Far East for *Ulva* as a human food Prices in Japan may reach $60 per kg for this product There is currently no Peruvian market so an export conduit would need to be established It can be used as animal feed supplement although at a lower value added price Processing needs of the harvested product remain to be determined

Ulva is typically grown from ropes suspended in the water Recruitment of individuals is left to natural causes There are reports of successful grow-out of *Ulva* in sewage loaded water from various places around the world, although the exact nutrient, light and flow conditions remain to be investigated Little information is available about the recruitment and grow-out of *Ulva* in ponds or raceways This would need to be determined in pilot stage experiments Of particular concern is the potential need to recruit individuals artificially and "root" them onto ropes If this needs to be done, labor costs may be high This is an issue applicable to all macroalgae that will need to be determined in the pilot stage

Gracilaria, a few species of which provide most of the agar-agar in the world, is considerably better known as an aquaculture species than *Ulva* *Gracilaria* has been successfully grown, usually from ropes or nets suspended from rafts, in the Far East It's main by-product, agar-agar, has a well established and worldwide market In addition, recent research suggests that it can yield other valuable by-products From this perspective, its successful aquaculture in Peru could be a beneficial high-value added option for the present project

- *Gracilaria* grows rapidly with rates of 40 g/m^2/day (B LaPointe, 1996, pers comm) However, as with other macroalgae, life-cycles are complex, and recruitment and rooting strategies remain to be determined

Most *Gracilaria* aquaculture is done in the open ocean Some grow-out experiments have been accomplished in raceways and ponds The most successful of these were by La Pointe and Ryther during the 1970's In these experiments, *Gracilaria* was shown to grow well in secondary treated wastewater in raceways

Culture of *Gracilaria* can have several disadvantages These include (1) the unknown availability and quality of seed-stock in Peru, (2) the conditions needed to maximize by-product production may not be the same as those needed for maximizing biomass growth, and (3) there may be resource intensive extraction or other product processing needs to consider Overall, however, high value-added potential and the existence of a well established market for the product makes this alga interesting enough to consider for aquaculture purposes

All of the algae being considered for aquaculture are marine No candidate species have been identified for macroalgal culture in freshwater situations However, there exists a well established tradition of using macrophytes such as water hyacinth (*Eichornia crassipes*) or duckweed (*Lemna* sp) in domestic wastewater treatment These options were not explored for this project

2.3 4 2 Microalgae

In the context of wastewater treatment macroalgae suffer from the disadvantage of their complex life-cycles and generally sessile lifestyle Modeling growth and nutrient kinetics is difficult, complex rooting structures may be required, and culture densities are much lower than those achievable with microalgae This results in systems that are less predictable and less efficient in terms of wastewater treatment This is because microalgae, as single celled or filamentous free-floating organisms, can achieve higher densities as cells are distributed throughout the water column In addition, the circulating algae behave as a biological reactor, allowing the modeling and calculation of more reliable dimensions and process criteria for the system

Spirulina grown for animal feed or human consumption thrives in high salinity environments where predation and competition are easily controlled Its environmental requirements include a high nutrient input (C N ratio of about 30 1) provided by wastewater or direct human or animal waste, some added carbon in the form of alkalinity input during the day when the pond becomes carbon limited (typically added as sodium carbonate or soda), and a salinity of >20 ppt These conditions produce good biomass growth High salinity environments accelerate removal of coliforms and other pathogenic organisms which have short survival times in salt water

Spirulina readily settles out by gravity filtration Filtered algae are dewatered in a vibrating or shaken screen (producing a slurry of 6-8% solids) and the resulting slurry is filtered through a centrifugal filter producing a cake with 18-22% solids The cake is dried in the sun (on days with a solar temperature > 55 C) or in a drying chamber The flakes can then be ground to powder to be used as food or animal feed (Ayala et al 1987, Fox 1987) This process may remove sufficient pathogens for direct human consumption (Fox 1987) *Spirulina* produced for the health food market is grown aseptically with artificial nutrients in closed systems (Cyanotech 1996)

A problem encountered in growing *Spirulina* in large outdoor ponds in desert climates has been lower than expected yield An apparent reason is photoinhibition, i e an excess of sunlight (Vonshak and Guy 1987) Yields may be improved by covering the ponds Many sectors of the Peruvian coast are sufficiently cloudy or foggy to obviate this problem, yet possess an even climate permitting efficient operation

At up to 15 $g/m^2/day$ growth rates for *Spirulina* are not among the highest for algae However, since *Spirulina* may consist of up to 70% (dry weight) protein, its relative nitrogen uptake is greater than other algae This provides a more efficient treatment of wastewaters

Spirulina needs to be dried and ground to be consumed Since parts of the Peruvian coast lack hot sunshine, the produced algae may need to be artificially dried Overall, the product constitutes an excellent food product that should be able to find a local market as human and/or animal food The main drawback of *Spirulina* is its relatively low value-added potential compared to some other However, ease of growout and reliability of harvests may compensate for this

Other microalgae that may be considered for evaluation are *Dunaliella* and *Porphyridium* Both are of interest for their by-products (*b*-carotene for *Dunaliella*, carrageenan and phycobiliproteins for *Porphyridium*) As microalgae, they offer the advantage of being grown in higher densities than macroalgae The primary disadvantage is that their by-products may require resource intensive processing Also, the conditions that maximize by-product production may not be the same as those needed for biomass maximization This is known to be true for *Dunaliella*, where carotene production declines in high nitrogen environments even though biomass production is increased Since the wastewaters from the fishmeal plants are high in nitrogen, this species may not be suitable for the project

Porphyridium is another relatively well known species Its carrageenan by-product has a high value and a well established world market However, most of the work on this species is at the research stage so detailed knowledge of optimal environmental conditions are not well known at this point Its potential is high, however, recommending it for further study

2 3 4 3 Choice of Species for Pilot Evaluation

On the basis of the above discussion much remains to be determined in relation to the combined aquaculture and wastewater treatment phase In a future pilot stage, a variety of species will need to be evaluated in terms of both their usefulness to treat the wastewater and ability to produce a value-added product

- Microalgae are better known in terms of wastewater treatment (most waste pond systems depend on mixed algae for various facets of the treatment process) and can be modeled efficiently They can be grown at high densities, thus minimizing space requirements and increasing treatment efficiency At first glance, they would seem to be more suitable Macroalgae offer interesting possibilities for high-value added products and new industries for the Peruvian coast However, their usefulness in terms of wastewater treatment remains to be clearly established

Figure 10 *Lyngbya majuscula*, a blue green alga with 5-10 cm filaments
Native habitat subtidal areas and tidepools, tangles with other algae

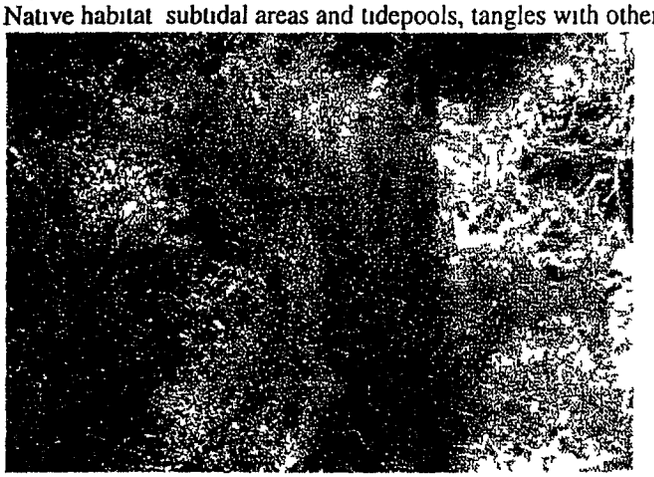

Figure 11 *Gracilaria salicornia*, a native of reef flats and tidepools
Grows as dense mats 1-5 cm thick

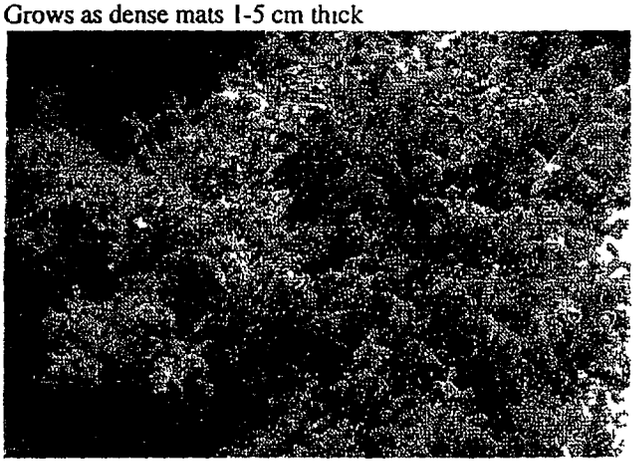

Figure 12 A view of *Gracilaria* sp under magnification

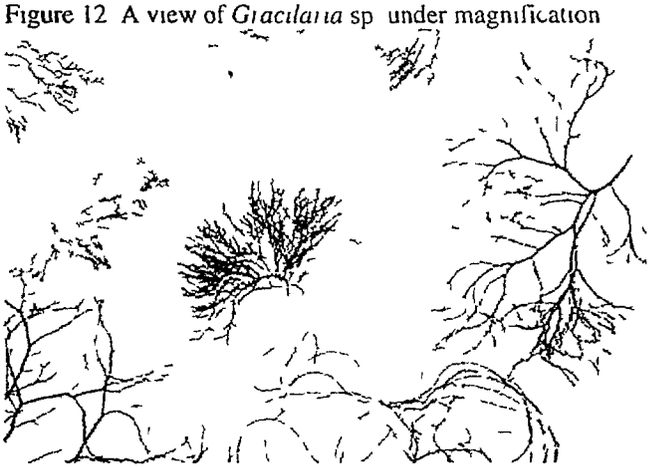

As discussed previously, the quality of the treated influent wastewater may be such that further pretreatment to reduce nitrogen loads is required before it can be used for any algae based secondary treatment The pilot plant will determine the techniques and values needed Since the wastewater will likely contain as high a pollutant load as compatible with algal survival, growth, and secondary treatment needs, any species that is a candidate needs to be evaluated under realistic circumstances For these reasons, the algae selected for evaluation in a pilot operation for this project include *Ulva*, *Gracilaria*, *Spirulina*, and *Porphyridium* Dr Brian LaPointe and Dr Bill Oswald are renowned experts on algal aquaculture that are interested in the current project because the use of wastewater for aquaculture production has potential as a profitable endeavor This gives such projects a broad applicability to many areas of the world Both have expressed interest in assisting in the pilot phase of a combined saline wastewater treatment/aquaculture project

2 3 5 Engineering Design of a Pilot Aquaculture /Secondary Treatment Facility

2 3 5 1 Linkage with Primary Treatment

The pilot aquaculture facility will be linked to the primary treatment system A protein recovery system could operate entirely on treated wastewater However, seawater addition would be necessary to allow various concentrations of wastewater in the aquaculture facility Feedback to the primary treatment system will be provided to adjust output to optimize aquaculture production

The use of a physical treatment process will require incorporation of a dilution system In the absence of effective waste minimization, the best achievable effluent from the primary treatment system may not provide adequate water quality In this case, the wastewater will have to be blended with seawater to determine the optimal growing conditions for the algae

The aquaculture facility will be designed to operate in the absence of wastewater from the plants Such design will allow the aquaculture facility to operate at times other than when fishmeal plants are active Under such a concept, polluted seawater that exists within the bays around the fishmeal plants will be used as the nutrient source This design will necessitate a separate seawater dilution and pumping system The pilot stage will need to determine what, if any, fertilizing needs are necessary for a system operated solely on seawater

2 3 5 2 Water Quality Requirements

The design of the secondary treatment/aquaculture system requires a minimum water quality to be able to achieve the treatment and aquaculture objectives The exact definition of these limits will be a central component of a pilot study Suggested water quality criteria to be used for design purposes are listed in Table 4

Table 4 Suggested water quality design criteria

	Minimum influent quality	Minimum effluent quality
Suspended solids	Turbidity is primary design limiting criterion for aquaculture Needs to be determined	Peru regulations have expressed limits as total solids An objective of 100 mg/L suspended solids is suggested
BOD	Needs to be low enough to avoid oxygen depletion and allow sufficient oxidation in the ponds	Peru regulations have required 400 mg/L max daily average An objective of <100 mg/L is appropriate
Phosphorus	Not a critical factor	Phosphorus is not a limiting nutrient in most marine systems, so will not need special consideration
Pathogens	Should not contain large amounts of human pathogens	Fecal Coliform count of less than 2000 MPN/100 mL is Peruvian requirement

2 3 5 3 Construction and Operational Parameters

Following pretreatment, the effluent flows will be conveyed into *facultative lagoons* to reduce the organic content of the water and produce the algal crop This requires the lagoons to be built in a shallow arrangement which allows light to penetrate the entire water column The shallow depth allows photosynthesis to occur throughout the full depth of the water Turbidity of the water plays a role in determining the depth of the lagoons When used for the purpose of propagating algae, these facultative lagoons are more appropriately termed "aquaculture" chambers Detention time and surface organic loading are other primary sizing parameters for these systems

From an engineering standpoint, the principal sizing parameters for the aquaculture chambers when simultaneously used as facultative lagoons for organic reduction are flow volume and organic content Since specific background data or a treatability study are lacking, a system is proposed which is flexible enough to deal with a wide range of influent characteristics To this end, the system would be designed and built to allow adjustment of the influent to the pretreatment system (i e , dilution) and provide for the ability to batch load (or pulse) more than one aquaculture lagoon In this manner, the strength of the waste load can be dealt with to determine what the system can and cannot handle and still function properly

Batch loading of the aquaculture lagoons would be similar to operating a Sequencing Batch Reactor (SBR) system In such a system, a single basin is loaded (filled) and allowed to treat the waste without a flowthrough stream This minimizes overloading which would lead to loss of process, odors and problems with propagation of desirable algae species After a sufficient degree of treatment, the basin could be discharged to the ocean or to a wetlands system and be ready for a another cycle Therefore, two or three lagoons would be built to allow sequencing and potential recycle to the front end of the pretreatment system to help mitigate influent strengths This approach will also allow the examination of whether additional aeration is required in the facultative stage of the process

To evaluate the potential for aquaculture of the chosen species, one or preferably two pilot raceways per species needs to be constructed in the pilot stage The total number of pilot

raceways will be 4 or 8 All should have the option of batching, diluting and varying detention times U-shaped raceways may be the most economical configuration The raceways should also be able to be covered to regulate light For the macroalgal species, ropes or other structures for rooting may be required Microalgae would be grown as a mixed reactor

Algal material will be acquired in Peru, if possible *Ulva* and *Spirulina* should be locally available The other species may need to be imported initially

2.4 Fishmeal Wastewaters: The Tertiary Step Option

2 4 1 Introduction

After wastewater has passed through a protein recovery system, a pretreatment aquaculture step (for fishmeal industry wastes), or the AIWPS (for domestic wastes), it will have a dramatically reduced load of BOD, suspended solids and nutrients (nitrogen and phosphorus) Effluents from the aquaculture step will be sufficiently treated to release back into the ocean or receiving stream without causing further environmental degradation

However, there are several options available that may provide additional social and economic benefits Treated freshwater may be used as irrigation water Saltwater may constitute a water source for wetlands that provide ancillary benefits in the form of wildlife enhancement and tourism potential or direct benefits in the form of harvestable products Wetlands have the additional benefit of providing a final "polishing" of the wastewater before final discharge

A final option, to avoid discharging incompletely treated wastewater into particularly sensitive habitats such as lakes or enclosed bays might be the use of rapid infiltration systems Many parts of the Peruvian desert coast may be appropriate for such an option In a rapid infiltration system, the effluent is released into porous basins where the water is allowed to percolate into the ground and recharge the groundwater The passage through the soil has a purifying effect on the water and surface discharge is reduced to essentially zero

2 4 2 Wetlands

The purifying capacity of natural wetlands is generally limited However, wetlands can be successful as polishing units that remove remaining pollutants after initial treatment Therefore, wetlands are generally considered as tertiary treatment options particularly where secondary treatment is not able to meet discharge limits for nitrogen and phosphorus Only in very small-scale applications could a wetland be used as a primary treatment option In slightly larger systems, wetlands can be effective as secondary treatment systems, usually following an oxidation pond or similar "natural" primary treatment options

2 4 2 2 Peruvian Coastal Marshes

The "Pantanos de Villa" marshes south of Lima represent a typical Peruvian coastal marsh created by upwelling groundwater impounded behind the beach The vegetation distribution in the marsh follows a salinity gradient beginning with freshwater *Typha augustipholia* (marshes with open water surface lagoons occurring at the inland end of the marsh) Closer to the ocean, saline saltgrass (*Distichlis*) dominates the wetlands immediately behind the backdune of the beach Other marsh species present are the freshwater bulrush *Scirpus americanus* ("totorilla") and typical macrophyte vegetation like *Pistia strateites* ("lirio de agua"), *Azolla* sp , *Lemna* sp (duckweed) and *Eichornia crassipes* (water hyacinth) (Vites 1992) The *Scirpus-Typha* association represents a vegetation combination that has proven effective in freshwater wetland systems worldwide and may well prove useful in the current project *Eichornia* is well known in wastewater treatment as a potential natural treatment option (Reed et al 1995)

Closer to the ocean, the marsh area is dominated by intermittently flooded, sandy areas dominated by the salt-grass *Distichlis spicata* Two other salt tolerant grasses also present are *Paspalum vaginatum* and *Sporobolus virginicus* This part of the marsh is termed the "gramadal" *Salicornia fructivora* can also be found in this area (Vites 1992) Little is known on whether it is possible to cultivate and transplant these species to a potential wetland, their required water quality and quantity, or their effect on the operation of a constructed wetland However, *Salicornia* has been successfully aquacultured in Mexico and Saudi Arabia

An important characteristic of the marshes that occur along the Peruvian coast is their lack of tidal influence Most of the marshes do not have a permanent surface connection to the ocean and are not influenced by tidal influx They consequently do not experience regular tidal flushing or major surface flows Underground seepage and evapotranspiration seem to dominate the hydrology of these marshes Sporadically, large ocean waves break over the beach dune and flood the oceanic end of the marsh These characteristics imply that the hydrology of Peru's natural marshes is a poor design for a constructed wetland which depends on steady surface flows and/or tidal flushing for its efficiency Any constructed wetland for the proposed project would have to consider the implications of the shallow, permeable water table and the relatively stagnant nature of the coastal marshes

2 4 2 2 Ancillary Benefits of Wetlands Wildlife and Tourism

As the Pantanos de Villa and other marshes along the Peruvian coast show, the presence of a wetland is a magnet for wildlife Many bird species are resident Even more use the marshes as resting areas as the Peruvian coast is on the Pacific Flyway migration route between North and South America The creation of a wetland environment where none previously existed would enhance wildlife habitat for many species Considering that many existing wetlands are being encroached by development, the creation of new habitat could serve as valuable regional mitigation

The presence of wetlands provides aesthetic values to the area, particularly given Peru's typically desert-like coastal environment Increased area wide tourism potentially provided by a wetlands area is a factor to consider when determining the final disposal of the treated wastewater

2 4 2 3 Products from Wetlands

Natural wetland areas potentially provide fishing and hunting habitat, although they probably would not support heavy exploitation under the current assumptions However, there has recently been some interesting developments in the culture of *Salicornia*, the ubiquitous "pickleweed" of salt-marshes worldwide

Salicornia seeds provide an edible oil structurally similar to safflower oil Its taste compares well to other vegetable oils The yield is approximately 260 kg of oil per metric ton of seed The remaining seed material can be ground into meal which can substitute for soybean meal in a poultry diet if the saponins in the meal are deactivated during the preparation process This characteristic is similar to alfalfa which also contains sufficient saponins to act as an anti-feedant when fed to poultry Saponin is deactivated by adding small amounts of phytosterol to the meal The yield of meal is approximately 660 kg per metric ton of seed

The remaining plant material, the straw, is also usable as a feed source It is relatively low in protein but is acceptable for ruminant animals Since its salt content is high, it is necessary to reduce the salt content or blend it with other feed to be acceptable Washing in seawater is sufficient to remove 65%-70% of the salt and the resulting product can be fed directly to cattle, goats and sheep (although it should be noted that some nutrition is also removed in the washing process)

Yields of *Salicornia* can reach approximately 15 tons per hectare, implying 0 5 tons oil, 1 2 tons meal and the remainder as desalinized feed *Salicornia* cultivation has been developed in Saudi Arabia where 50 ha desert plots are irrigated with seawater by pivot irrigation systems *Salicornia* is also being cultivated in Puerto Peñasco, Mexico in an environment similar to Peru Cultivation is fairly easy in warm, well drained, coastal areas, and therefore represents a potential application of treated fishmeal wastewater in suitable areas along the Peruvian coast Dr Hodges, the world expert on *Salicornia* cultivation, has been consulted for the current project, and is willing to participate in the development of a pilot production unit The existence of a marine wastewater stream allows the fertilization step required for clean seawater irrigation to be eliminated

2 4 3 Rapid Infiltration Systems

2 4 3 1 General

A rapid infiltration (RI) system consists of open basins into which wastewater is pumped for 2-3 days and then allowed to dry for 7-15 days The wastewater percolates down through the

soil and recharges the groundwater Given suitable soils and infiltration distances, pollutants including nutrients, BOD, and pathogens are removed from the infiltrating water The resulting groundwater (in a well designed freshwater system) is usable for all purposes including drinking water In the case of saline wastewaters, the resulting groundwater will be affected by salinity It is necessary to insure that no down-gradient groundwater users will be affected This can be achieved by locating the basins as close to the ocean as possible so that the basins represent the "last" user

RI systems must meet criteria for soil quality (sand or sandy loams with high permeability), distance to the water table (over 3 m preferred, and 1 5 is absolute minimum), and land gradient (<10%) The critical factor in design is the hydraulic capacity of the soil (i e , the speed of infiltration) Waste load in the form of BOD is seldom limiting as oxidation of organic material is rapid Nitrogen is removed through a nitrification/denitrification process Efficient nitrogen removal is often the size determining characteristic as more area and stricter control over loading-drying cycles is necessary to achieve denitrification Phosphorus is absorbed onto the soil A critical factor is the soil cation exchange capacity Pathogens are removed in the first 5 m of soil, although viruses may travel further depending on coarseness of the soil

With suitable soil and hydrology characteristics, an RI system is an attractive option for final wastewater disposal with essentially zero discharge as far as surface water is concerned The basin number and size needed to receive the wastewater depends on the soil and which factor is limiting nitrogen removal or soil hydraulics For a typical system each hectare of basin can handle an average of 190 m^3/day of wastewater Sufficient numbers of basins must be established to maintain a typical loading-drying cycle in each basin (1-3 days application and 5-6 days drying for BOD removal, longer drying periods for nitrogen removal)

A major advantage of RI systems is that they do not require offseason maintenance of vegetation If no flow is present, they simply dry out until wastewater is applied again The lack of any surface discharge is also an advantage as long as any effects on groundwater are carefully considered The sandy soils and available "waste" land of desert areas of Peru appear to be appropriate for the establishment of RI systems The major disadvantage is the critical importance of having suitable soils and sufficient distance to groundwater which may eliminate many otherwise attractive sites from consideration If groundwater quality is a major concern the use of RI systems must be carefully managed to insure proper treatment in the basin to avoid pollutant "breakthrough" into the groundwater table

From a process standpoint, RI following primary/secondary treatment can produce a highly polished effluent which is low in BOD, TSS, and nitrogen content Organic loadings to RI basins can range up to 130 kg/ha/day Both nitrification and denitrification can occur in these systems when operated in cycles

Typically, design of RI systems uses a surface impoundment for application with annual rates ranging from 6 to 125 meters of water depending upon site conditions This converts to an area requirement of from 0 8 to 6 1 ha per 1000 m^3 of waste applied per day The level of treatment required prior to infiltration can vary widely but generally includes primary

sedimentation as a minimum The amount of pretreatment necessary is guided by the soil characteristics, the nature of the wastes, depth to ground water and the desired quality of water following RI application

2 4 3 2 Design of a Pilot Plant

Since the site will be located in a coastal area, the depth to groundwater will be a design consideration for implementation The desired groundwater depth range is from 1 5 to 3 meters below the bottom of the RI basin It is believed that this can be achieved in most areas within a few hundred meters of the coast or less

Rapid infiltration basins are operated in dosing cycles with drying periods between applications sufficient to allow the ground below the basin to purge and the basin to dry out Therefore, the minimum number of basins required would be two with large scale applications being comprised of multiple basin systems Typical application cycles per basin in an arid climate would fall in the range of 1 to 3 days of application followed by 4 to 5 days of rest Figure 13 presents a sketch of the principle of RI systems

A pilot plant layout for an RI based upon a flow rate of 20,000 gpd would include at least two basins that allow up to 0 6 meters of water depth The surface area sizing for each basin would vary with the site characteristics

Figure 13 Sketch of principle of RI basins

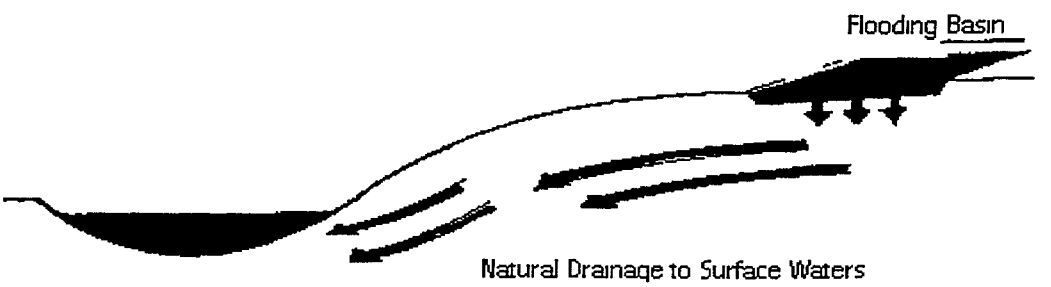

RAPID INFILTRATION HYDRAULIC PATHWAY

2 4 4 Applicability and Conclusions

The tertiary processes presented here (wetlands and land application) are presented as optional Effluent water quality after the secondary step is meant to be adequate for release to the receiving body The need for any further steps needs to be evaluated on the basis of economic needs, regional policies, availability of land, suitable environments, and cost-benefit analysis

In the case of wetlands, the critical variables are land availability and seasonal variations in flow Where fishmeal plants operate only sporadically, a wetland may not be feasible

However, a freshwater wetland resulting from treated domestic wastewater may produce substantial ancillary benefits from a tourism and wildlife standpoint Such a system might be of interest to local and regional authorities or international aid agencies and NGO s

A *Salicornia* production wetland is a feasible concept for areas where new economic development is desirable and land is available The product from such a venture can be used to offset costs for the overall treatment process

Rapid infiltration systems also require available land in addition to the other hydrologic and geologic requirements discussed In situations where zero discharge is desirable, the system could provide environmental benefits although value-added products are not likely

2 5 Domestic Wastewaters: The AIWPS Approach

2 5 1 Introduction

Quality criteria for waste treatment processes should be rigorously applied in considering alternative processes These criteria center around cost-effectiveness, reliability, and environmental impact, among others Cost-effectiveness criteria incorporate technical and functional feasibility as well as sanitation and environmental impact, compatibility with natural resources, water and land use, and the biota of the area

Criteria involving reliability and redundancy are of paramount importance In considering these criteria and the protection of human and environmental health, the critical factor in selecting a waste treatment and disposal system is not its maximum or average performance under ideal conditions but rather its minimum performance under adverse conditions Under these non-ideal conditions, mechanical systems are less reliable than treatment in ponds Opportunity for reclamation of water and nutrients and the possibility of applying more advanced alternatives are also important long-term criteria Again, when comparing these criteria, ponds are superior to any mechanical system

Secondary wastewater treatment involves removal and digestion of settleable and floatable organic solids (primary treatment) followed by removal and digestion of microbial solids produced during aeration of the primary effluent (secondary treatment) Such treatment traditionally has occurred in reinforced concrete and/or steel structures with materials moved by motorized pumps and aeration provided by mechanical means Sometimes, for economy and simplicity in small communities, ponds are used to replace mechanical systems The greatest advantage of ponds are their simplicity, economy, and reliability Their biggest drawbacks are their high land use, potential for odor, and tendency to go eutrophic, fill in with sludge and become less effective with age The Advanced Integrated Wastewater Pond System (AIWPS) developed by Dr William Oswald maintains the advantages of ponds while mitigating their drawbacks This system requires less capital, energy, and operation and maintenance than mechanical systems and requires less land, produces less odor, and fills with sludge much more slowly than ordinary ponds

2 5 2 The Role Of Algae In Wastewater Treatment

One of the key components in Dr Oswald's pond system is the role of algae to produce oxygen and utilize carbon and nutrients Algae are aerobic organisms that are photosynthetic and grow with simple inorganic compounds (CO_2, NH_3 NO_3 PO_4) using light as an energy source Four major groups occur in ponds based on chlorophyll type brown algae, green algae, Cyanobacteria, and red algae The predominant algal species at any given time in a lagoon is dependent on growth conditions, temperature, organic loading, oxygen level, and available nutrients The role of these factors in influencing algal function is described below

2 5 2 1 Nutrients

Approximately 25 elements are known to be essential for most forms of life including algae In the case of algae, carbon, nitrogen, and phosphorous are most likely to limit growth The magnitude of these nutritional requirements for green algae are outlined in Table 5

Table 5 Major elements in waste grown algae

Element	Percent of Ash Free Dry Weight	Algae Biomass Potential (ABP) Multiplier
Carbon	52 4	1 91
Hydrogen	7 4	-----
Oxygen	29 4	-----
Nitrogen	9 2	10 7
Phosphorous	1 3	76 9

By dividing the percentage of each element by the corresponding atomic weight, the following formula for rapidly growing green algae cell material is obtained $C_{106}H_{181}O_{45}N_{16}P$ The weight ratio of oxygen released to cell matter synthesized is approximately 1 5 Therefore, the greater the growth rate of algae, the greater the oxygen released Lab tests of Algae Biomass Potential (i e the potential of the sewage to generate algal biomass) sewage reveal that carbon is the first element to become limiting Because algae grows in water, oxygen and hydrogen rarely limit algal growth If carbon, nitrogen, and phosphorous are not limiting, insufficient light will be the next parameter to limit algal growth

2 5 2 2 Light

Within the visible spectrum of 4000 to 7000 angstrom units, microalgae utilize all wavelengths of light more or less equally Outdoor cultures become light limited when one cannot see a Secchi disk at ½ the depth of the cultures Approximately 98 percent of the light absorbed by algae is converted to heat The remaining 2 percent is retained in the bonds of photosynthesized organic matter Based on the weight ratio of oxygen released (1 5), the heat of combustion of 1 mg of algae is about 5 7 cal/mg of ash-free dry weight Based upon this, approximately 3 5 calories are fixed with the release of each milligram of O_2

The photosynthetic efficiency (PE) is defined as the ratio of chemical energy fixed in the cells to energy input from light for equal volumes Under average conditions, the PE is approximately 2 percent of the total solar energy volumes From this, one can determine that in algal photosynthesis, 180 calories (i e , 3 5/0 02) of solar energy are required to release 1 mgof oxygen from the water This result correlates to findings that there is a direct relationship between the oxygen production of a pond and the angle of incidence of the incoming light source Table 6 depicts the influence of south latitude on oxygen production

Table 6 Influence of latitude on photosynthetic oxygenation

South Latitude Degrees	Solar Energy Langeley/day		Oxygen Produced by Algae mg/cm/day		grams/m/day		tons/ha/y		Person equivalents / ha	
	Dec	June	Dec	June	Dec	June	Dec	June	Dec	June
10*	742	389	4 04	2 11	40 4	21 1	147	77	5050	2638
20	786	296	4 33	1 61	43 3	16 1	158	58	5434	2016
30	829	195	4 50	0 86	45 0	8 6	164	31	5649	1075
40	839	87	4 57	0 47	45 7	4 7	166	17	5714	587

* Latitude of Peru varies from 4° to 18° degrees
1 Langeley = 1 cal/cm
Assumes a 2% PE, 1 person equivalent is 80g O_2/day

The sewage of one individual requires about 80 g O_2/day for complete oxidation The area required for photosynthetic oxygenation varies from 1 75 to 17 m^2/person equivalent depending on the season and latitude If pretreatment in a facultative pond removes 60-70 percent of the BOD (Biochemical Oxygen Demand), the area of High Rate Pond may vary from 1 0 to 6 0 m^2/person equivalent / day With sufficient facultative pretreatment, one hectare of HRP will produce sufficient oxygen to satisfy the remaining BOD for 2,000 to over 5,000 people / hectare

Algae in lagoons can consume all of the carbon dioxide and bicarbonate present, leaving only carbonate as the sole buffering species In this case, the pH of the lagoon becomes alkaline pH values of 9 5 or greater are not uncommon in lagoons and can cause effluent discharge violations (a pH=9 0 is the standard U S discharge limit) As mentioned previously, natural disinfection of pathogens, along with an increase in phosphorus removal, is greatly enhanced at pH values greater than 8 5

2 5 2 3 Temperature

Classic microbiological theory reports that the rate of microbial activity increases by a factor of two for every 10°C increase in temperature Waste-oxidizing bacteria grow and respire at approximately the same rate during the day and night while algae respire at different rates The rates of algal respiration are difficult to measure during the day due to the constant production of oxygen During the day, microalgae gain weight and release oxygen They lose weight due to respiration at night The nocturnal loss of weight varies from approximately 1 % per hour at 20°C to 2 % at 30°C Because waste grown microalgae are mainly dependent on bacterial oxidation of organics for their carbon dioxide and ammonium supply, low temperatures will inhibit nutrient

uptake and algae growth Studies have concluded that optimum thermal habitat for *Chlorella* is near 20°C while 25°C is the optimum growth temperature for *Scenedesmus*

2 5 2 4 Salinity

Microalgae tolerate a much wider range of salinity and total dissolved solids (TDS) than higher plants Algal tolerance ranges from snow melt which may have a TDS of 10 mg/l to the Dead Sea which may have a TDS of 250,000 mg/l As salinity varies in wastewater, algae species vary from green algae (which favor low TDS waters) to diatoms (which are abundant in sea water) The wide range of salinity in wastewater may require an extensive amount of time for a specific algal flora to adapt and replicate

2 5 2 5 pH

The principal source of carbon for waste-grown algae is the bicarbonate ion (HCO_3^-) which usually attains a maximum value at a pH=8 3 Current data reveal that algae do not utilize carbonate (CO_3^{-2}) In a carbonate-bicarbonate buffered system, the pH is determined by the logarithm of the ratio of carbonate to bicarbonate Since pH tends to increase as the algae grow, the bicarbonate ion is the source of carbon Commensal bacteria, producers of CO_2, may be limited in the oxidation of organic material by pH levels of 9 to 10 that normally occur near the surface of rapidly growing algal cultures This, in turn, may limit the amount of carbon dioxide or bicarbonate available to the algae In a high rate pond, it is recommended that cultures be mixed only enough to maintain algae in suspension and to permit bacterial flocs to drag along the bottom in a zone where the pH remains near neutral

2 5 3 The Advanced Integrated Wastewater Pond System (AIWPS)

An effective, reliable, and economical AIWPS consists of a series of at least four ponds and/or wetland, each designed to perform one or more of the basic treatment processes (see Figure 1) Treatment takes place first in a facultative pond with an aerobic surface and an anoxic internal pit for sedimentation and fermentation Anaerobic microbes in the pit are protected by surrounding walls or berms from the intrusion of cold surface water containing dissolved oxygen Raw sewage is introduced directly into the pits where sedimentation and methane fermentation occur Overflow velocity in the pits is maintained so that suspended solids removal approaches 100 percent and biochemical oxygen demand (BOD) removal approaches 70 percent The overflow velocities of one or two meters per day are less than the settling velocities of one or two meters per day This is also less than the settling velocities of helminth ova and parasite cysts, so most of these remain in the pit and are permanently removed from the effluent

Another potential benefit of anoxic pits is conversion of chlorinated hydrocarbons to forms that may be biodegradable in an aerobic environment Due to the large pit volume and its reducing environment, settled solids ferment to a point where only ash remains Hence, sludge removal is seldom, if ever, required At St Helena, California (the first AIWPS), sludge removal has not been

required for over 25 years A second AIWPS at Hollister, California shows little sludge build-up after 12 years

The phenomena that occurs in the fermentation pits of facultative ponds are somewhat unique and deserve consideration Quiescent sedimentation is only a first reaction In the anoxic zone in a pit, surfaces of solid particles that settle from raw sewage become populated by acid-forming and methane-producing bacteria As gas is released on their surfaces, the solid particles become buoyant and tend to rise due to the attached gas bubbles If the pits are sufficiently deep (5-6 meters), the gas bubbles expand as they rise and usually will break away from the particles before reaching aerobic surface waters The bubbles then emerge and the particles, with their adhering anoxic bacteria, reform to again settle down through the slowly rising bed of influent sewage In this way, the entire raw sewage flow is passed through a volume of intense anoxic activity where both insoluble and soluble organic matter is absorbed and converted to carbon dioxide, water, methane, and nitrogen gas The methane gas can be captured and utilized through cogeneration to offset utility costs

The positive action in deep AFP pits is very similar to the well known upflow anaerobic sludge blanket (UASB) reactors without some of UASB's problems Like Imhoff tanks, when pretreatment and maintenance (even for a short time) are neglected, UASB's are prone to clogging with rags, plastic bags, and compacted sludge or grit, and often require rigorous management including fail-safe pretreatment, frequent sludge removal, and other maintenance For an AIWPS, sludge removal is not often required, clogging is impossible, and maintenance is minimal Thus, the main principles and advantages of UASB reactors are realized in advanced facultative ponds with few of the disadvantages and with lower costs The helminth ova removal within the fermentation pits is of particular interest in developing countries where millions of children are weakened by parasites and, consequently, fall prey to childhood diseases

The second pond of an AIWPS series is a paddle-wheel mixed shallow raceway called a High Rate Pond In such a pond, microalgae grow rapidly and release oxygen from water by photosynthesis The oxygen is immediately available to bacteria to oxidize most of the soluble and biodegradable BOD remaining in the effluent from the facultative pond Algae produced during paddle-wheel mixing are highly settleable (Eisenberg 1981) After algal removal by sedimentation or dissolved air flotation, the remaining water has a BOD that is generally less than 20 mg/l Recirculation of algae-bearing water from the High Rate Pond to the Facultative Pond provides an oxygen rich cap on the facultative pond This oxygen quickly oxidizes reduced gases emerging from the fermentation pit, thus mitigating odors Algae in the recycled waters tend to absorb any heavy metals that may be present in the incoming waste and to settle in the facultative ponds, thus removing most of the absorbed metals from the facultative pond effluent (Ramani and Oswald 1975)

The interrelationship between paddle-wheel mixing and algae sedimentation was first noted in high rate pond studies in the Philippines and was confirmed in extensive subsequent studies at Richmond, Virginia (Eisenberg 1981) Both Nurdogan (1988) and Hall (1985) have studied the reasons for improvement in algal sedimentation following paddle-wheel mixing Nurdogan has found a natural selection for large algae which settle in a quiescent field, and Hall has emphasized

the natural filaments produced by algae and their tendency to cause agglomeration of cells with consequent improved sedimentation Both phenomena appear to be important in natural separation Neither is related to the phenomenon of auto flocculation that occurs due to high pH in poorly mixed ponds resulting in precipitation of calcium carbonate, magnesium hydroxide, and calcium phosphate This type of precipitation, as well as thermal stratification, is prevented by continuous mixing at a linear velocity of about 0 5 feet/sec (15 cm/sec)

Freshly-harvested algae produced from wastewater treatment facilities are rich in protein, vitamins, minerals, and energy It has been demonstrated that these algae can replace expensive soy bean meal in agricultural feed Potential toxic effects due to algal uptake of high concentrations of metals are a concern that must be investigated prior to marketing algae from wastewater ponds However, metals should not be present in the effluents expected in this project

The energy required to paddle-wheel mix a shallow pond at a velocity of 15 cm/sec is only about 5 kw-hrs per hectare per day This results in the release from water of more than 100 kg of dissolved oxygen per hectare per day - that is 20 kg of oxygen per kilowatt hour (kw-hr) This compares with mechanical aeration which normally transfers one kilogram of oxygen per kw-hr Therefore, the energy savings is more than ten fold

The third pond of the AIWPS series provides sedimentation of algae in the effluent of the high rate pond As noted above, a paddle-wheel mixed high rate pond tends to select for algae that are settleable when not in a mixing field (Hall 1989) Algae (which settle) tend to become dormant and do not immediately decompose If two settling ponds in parallel are used, one or the other can be drained to harvest the algae Dried algal sludge is rich in nitrogen, phosphorous, and potash and is an excellent fertilizer for fast-growing There is little chance that dried algae would contain infectious organisms but to be safe, it should only be used on ornamentals and crops that are cooked prior to being eaten

Waters emerging from the settling ponds are sufficiently low in BOD and suspended solids to percolate readily into the ground or to be used for irrigation They will, however, likely contain a bacterial count greater than 1000 per 100 ml Such water may require additional storage prior to use

The fourth pond of an AIWPS (often called a Maturation pond) has the dual purpose of added disinfection and storage for irrigation A recent publication by the World Health Organization outlines major concerns and safety factors related to the use of wastewater for irrigation (Shuval 1988) According to Shuval and others, the major danger in developing lands is transmission of helminth ova This is virtually precluded by the use of four ponds in series Added to the need for four ponds in series should be an admonition against short-circuiting This is avoided by alternating surface and submerged intakes in pipes transferring water from one pond to another In lieu of, or in addition to, the fourth lagoon, a constructed wetland can provide additional nutrient removal along with numerous ancillary benefits as outlined previously Figure 14 depicts the process flow diagram for an AIWPS

2 5 4 Performance

Table 7 presents performance data from the Richmond, California Treatment Facility The data shows that the major fraction of BOD is removed within the facultative pond while the total nitrogen decreases significantly within the HRP The high rate ponds do not remove a great deal of BOD but contribute oxygenation to the facultative ponds and aid in the removal of nitrogen, phosphorus, and carbon Following algal removal, the degree of pollutant removal in an AIWPS is equivalent to that of mechanical secondary plants, with the added benefit of significant nitrogen and carbon removal, removal of heavy metals (if present), and a degree of fail-safe disinfection

Table 7 Treatment performance data from Richmond, California AIWPS (1992)

Parameter (mg/l)	Influent Sewage	AFP Effluent	HRP Effluent	Settling Basin Effluent	Overall Percent Removal
Total BOD_5	233	102	62	45	99
Soluble BOD_5	91	31	6	9	93
Ammonia	39 5	31 5	3	2 6	99
Nitrate	4	2	3	2 6	96
Total Coliforms (MPN per 100 ml)	$1\ 4 \times 10^8$	$2\ 4 \times 10^6$	$2\ 3 \times 10^4$	900	99 9
Fecal Coliforms (MPN per 100 ml)	9×10^7	7×10^4	5×10^3	170	99 9

2 5 5 Cost Criteria

The economy of AIWPS results from a number of factors beyond operation and maintenance For example, consider the cost of reactor volume Reinforced concrete reactors such as settling tanks and digesters are likely to cost $300 to $500 U S (1996) per m^3 On the other hand, formed earth reactors are likely to cost less than $3 U S (1996) per m^3 By using earthwork ponds, large reactor volumes can be created economically Microbes involved in treatment perform as well in earthwork ponds as they do in most elaborate digesters Also, since they cost so little, earthwork digesters (fermentation pits) can be made large enough to permit complete digestion and eliminate sludge handling for many years

2 5 6 Conclusion

Development of economical and reliable AIWPS is timely because of the problems communities throughout the world are now facing in financing their treatment systems The past trend has been toward complex and expensive mechanical treatment plants, many of which work poorly and are difficult to operate reliably in small communities and developing countries Based on results from St Helena, Hollister, and the Richmond facility, an AIWPS is not only economical and effective, but also attractive and nuisance-free For communities in Peru which have an abundance of sun and mild weather, AIWPS can provide a new opportunity to have natural, simple, reliable, and nuisance-free wastewater treatment with significant opportunities for reclamation and environmental enhancement at an affordable price

Figure 14 AIWPS process description

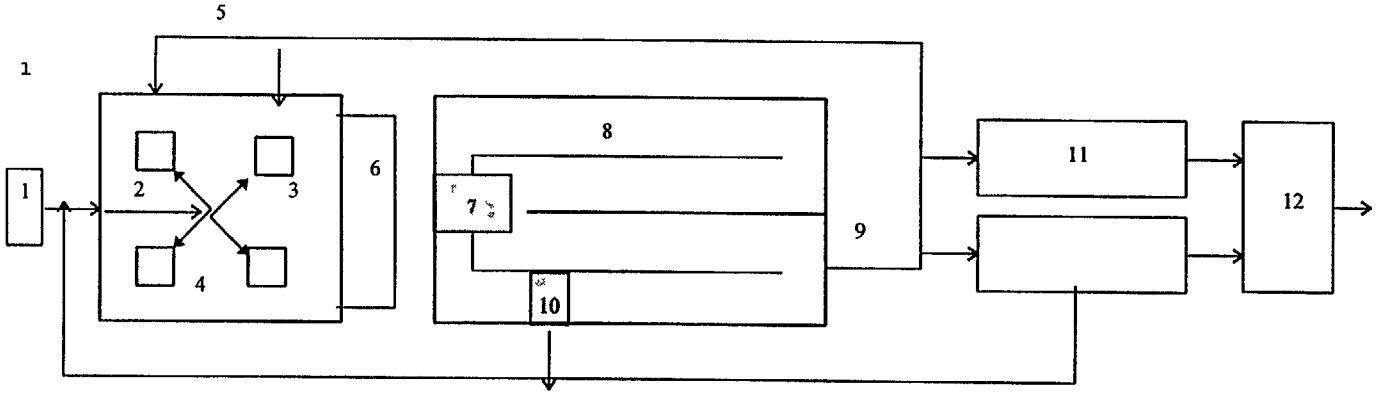

1	Screening	7	Paddle-Wheel Mixer
2	Distributor	8	High Rate/Aqua Culture Ponds
3	Fermentation Pits	9	High Level Transfer
4	Advance Facultative Pond	10	Algae Subsidence Chambers
5	Oxygenated Transfer Return	11	Algae Settling Ponds
6	Low Level Transfer	12	Maturation Pond

3. COSTS AND BENEFITS OF THE SYSTEM

3.1 Assumptions

- Pilot plant size 3 - 6 m^3/hr
- Typical full-size fish-meal plant 500 m^3/hr, with a 150 day operational period
- Calculations for the secondary treatment / aquaculture facility based on *Spirulina* aquaculture, as insufficient data available on other species *Spirulina* productivity is 12 5 g/m^2/d (compared to a productivity of 13 g/m^2/d for a dedicated high-tech U S *Spirulina* facility) This translates into 18 7 tons/ha/yr
- Aquaculture ponds /raceways are 30 cm deep to allow for the expected turbidity of the wastewater If deeper ponds are possible, areal needs will be substantially lower
- Residence time to allow BOD oxidation is 10 days The proper residence time and pond design is a function of pilot plant results
- Retail market value of high quality, health food Spirulina in the U S is $50-$110 per kg Wholesale prices are assumed to be 1/10 of this $5 - $10 per kg
- Labor and construction costs are based on U S prices Peruvian labor costs will most likely be lower
- Transportation and importation of foreign equipment is assumed to add 60% to the U S price

3.2 Cost-Benefit Comparison

3 2 1 Primary Stage, Physical Treatment

BENEFITS	
PRODUCTS	
Recovered Solids	Recovered product can be recycled into the system or donated or sold to area farmers as fertilizer or feed
ANCILLARY BENEFITS	This step will not yield ancillary benefits
WATER QUALITY BENEFITS	System serves as pretreatment for the secondary / aquaculture step Treatment efficiency ranges up to 60%

COSTS	
CAPITAL INVESTMENT	
Land	Variable cost, depending on location Land requirements are not large Full scale needs are less than a linear multiplier of the pilot needs

Treatment Equipment, cost	$50,000 (est) for pilot, based on a 1 6 multiplier for entry into Peru of necessary equipment Full-scale costs will depend on degree of treatment and raw effluent quality and quantity
Contingency, engineering and construction costs	$25,000-$50,000 (est) for pilot
Pumps, lines and connections	Variable Cost will depend on location of plant in relation to discharge Ideally the treatment system will be co-located with discharge
Energy supply	If no public power available generators might be needed
Off-site equipment and facilities	Office and water quality testing facilities
PRODUCTION COSTS	
Operating Costs	
(Fixed) Labor	Intensive supervision will be required for the pilot A full-scale operates with minimal supervision, except for the collection and disposal of the recovered solids
(Fixed) Maintenance	The low tech nature of the system implies low maintenance needs, except for the product recovery step
(Variable) Energy	Low energy requirements for proposed system, except pumping needs for clean dilution water
(Variable) Consumables	Minimal
Fixed Charges (depreciation, financial)	Depends on form of financing for project

3 2 2 Secondary Stage, Aquaculture System

BENEFITS	
PRODUCTS	
Aquaculture	Est value of *Spirulina* harvest $22,400 - $85,400 per year for proposed system
ANCILLARY BENEFITS	Ponds may serve as bird areas
WATER QUALITY BENEFITS	System is expected to yield effluent that can be discharged

COSTS	
CAPITAL INVESTMENT	
Land	Variable, less than 1 ha needed for pilot Actual pond size needs 0 24 - 0 48 ha A full-scale will require substantially larger areas
Ponds, raceways, cost	$15,000- $30,000 (est) for pilot
Engineering, Construction and contingency costs	$ 9,000-$18,000 (rough est)
Pumps and lines	Variable Cost will depend on location of plant in relation to discharge Ideally the treatment system will be co-located with discharge and close to the sea A seawater pumping system will be required in both pilot and (probably) full-scale
Harvest and processing equipment	Minimal for pilot Adequate harvest equipment for the selected full-scale species will be required Processing needs for some species may be relatively costly
Energy supply	Minimal, except for pumping costs
Off-site equipment and facilities	Lab and office facilities (jointly with primary step)
PRODUCTION COSTS	
Operating Costs	
(Fixed) Labor	Close supervison for pilot needed Full-scale will need trained personnel to

	manage and process product
(Fixed) Maintenance	System needs continuous supervision and maintenance
(Variable) Energy	Energy needs related to water pumping needs
(Variable) Seed-stock	Minimal, once adecuate stock established
(Variable) Consumables	Low needs, except if operation using seawater only is planned, which may require fertilizing (can use solids previously recovered in the primary step)
Fixed Charges (depreciation, financial)	

3 2 3 Tertiary Stage, RI/Wetland system

Costs and benefits of a tertiary system are site specific and cannot be easily estimated without site-specific information

3.3 Potential Markets for By-Products and Value-Added Products

The potential market for the products generated in the various stages of the treatment system needs to be fully explored in a pilot stage However, some potential markets can be identified

1) Conventional primary treatment sludge this product is unlikely to be of high value The product has a high nutrient content, however, and its direct use as fertilizer or soil improvement could be advantageous Since it is a by-product, the price can be set low enough to make it affordable to local farmers and inhabitants, thereby providing a direct benefit to the local agricultural economy It is also possible that the sludge can be converted into a base for feed that may be used by the abundant local poultry processors

2) Protein recovery product as described previously, this is a high-value product and can be marketed around the world The company selling the system is willing to enter into joint-venture agreements with the responsible entities to collect and market the product

3) Algal aquaculture products as discussed above, the markets for algae and their by-products show variable development and geographic distribution Algae used as feed can probably find a market destination with area animal processing facilities, particularly the poultry industry In a pilot stage, the exact requirements for such a feed would be determined

Algae used as fertilizer could peobably find a ready local market, although the local economy in many areas may not be able to pay for or absorb much of the product due to the low income and technological development level Markets for algal by-products are undeveloped in Peru There are established international markets for some products (for example carageenan or *b*-carotene), while other potential products at this time have more rudimentary markets In either case, processing facilities and development of an export market would be necessary to realize the value-added

Products intended for direct human consumption (for example *Ulva* or *Salicornia*) will need access to the international "fresh produce" market, or will need to be marketed as dried or processed products In such a case suitable processing facilities are needed There is currently little or no Peruvian market for these products, but such a market could be encouraged

4) Ancillary benefits as discussed previously, the potential presence of created wetlands and the improvement in water quality from the system operation will result in an increase in the tourism and development potential of the area An increase in these economic activities could represent a substantial benefit to the area economy, potentially eclipsing the cost of the treatment system

3.4 Local Participation

The development of a wastewater/aquaculture system will provide various opportunities for participation by local residents and investors Since the operation will be expected to generate marketable products, independent busines opportunities will be created Marketable products could include fertilizer, animal food supplements, pharmaceutical/nutriceutical products, and seafood and other foods This will provide opportunities for investors interested in the various aspects of the aquaculture operations Investment opportunities will arise which could result in either passive or active management positions in the companies Similarly, workers will be also needed to operate the waste treatment plant and the aquaculture facilities

Ultimately, any development of products for the pharmaceutical and nutriceutical industries could lead to additional manfacturing and laboratory positions The anticipated jobs will require a mixture of both skilled and unskilled labor Therefore, a broad range of opportunities will exist for all of the local residents The economic benefits derived will also be significant given the need for the skilled labor which will result in higher paying salaries

4. RECOMMENDATIONS

This report has presented a flexible outline for low cost approaches to dealing with wastewaters from various sources along the Peruvian coast A compartmentalized model was chosen to allow the most flexibility and generality in exploring suitable responses Specific sites and wastewaters will need specifically designed treatment systems incorporating one or more of the approaches presented here

As a result, there is no single system presented as the recommended optimum treatment system A pilot or operational design requires careful case-by-case evaluation of the site specific biological, economic and infrastructure conditions However, some major conclusions emerged early in the process, as described below

- Domestic and fishmeal wastewaters need to be considered separately The technologies involved have few elements in common, and represent different fundamental approaches For these reasons a joint treatment system is unlikely to be practical Diluting or blending the wastewater types also poses some problems the high pathogen load of domestic wastes causes any product grown in a blended wastewater to be unfit for human or animal consumption

- The possibility of joint "sequential" operation (i e sharing the same facilities but at different times) is a possibility, provided that available and connectable public sewer lines exist in the same place as the fishmeal plant system

- The high concentration of fishmeal wastewaters mean that no single process will be adequate for all conditions encountered along the Peruvian coast The choice of system will depend on 1) actual and desired receiving water quality, 2) quality and quantity of wastewaters, 3) internal waste minimization efforts, 4) available land and infrastructure, and 5) equity holders and investors available for the project

- No single process will be adequate for full treatment The high loads assure that a combination of primary, secondary and even tertiary treatment will have to be considered, again depending on local environmental and economic development goals

4.1 Domestic Wastewaters

Domestic wastewaters can be treated through conventional methods with low technology equipment The proposed system has already been proven in the U S and has definite potential for Peru because of its low operational requirements The low capital and construction costs of such systems give them wide applicability Recycling of the treated waters from these systems as an irrigation source can be beneficial in arid environments such as that found along the Peruvian coast The value of the water recycled can provide a financial resource for helping to offset costs of a wastewater plant and its operation

Since the technology for primary treatment are fundamentally different between domestic and fishmeal wastes, joint treatment is impractical However, locating the treatment systems in the same place might be an attractive option as part of the infrastructure could be shared and it could result in a desirable public-private joint enterprise This would depend on the physical proximity of substantial sources of both domestic and of fishmeal wastewaters The conditions in Chimbote, for example, might be amenable to this approach

4 2 Fishmeal Wastewaters

The recommended approach to dealing with fishmeal wastewaters will depend on a number of local factors Under a physical primary treatment scenario, it will be possible to

reduce only about 60-70% of the waste load discharged by the plants This is a relatively significant amount of reduction which, over time, may contribute to improvements in overall water quality in areas of limited existing degradation However, under this scenario, the water discharged would not meet discharge standards currently in place in Peru or other nations Additionally, any water quality improvement might be slow in coming In severely impacted areas, particularly Chimbote Bay, but perhaps also Paita and Pisco-Paracas, this level of treatment might be insufficient to result in any noticeable improvement in water quality for several years

If a fishmeal plant already produces a relatively benign wastewater, as for example through the application of effective internal waste minimization efforts, a conventional primary stage could provide adequate treatment to allow a secondary, algal aquaculture stage If the influent wastewater has poor quality, however, this type of approach is unlikely to yield satisfactory results

A secondary stage will almost certainly be necessary following conventional primary treatment Conventional primary treatment does not produce high value-added products The resulting organic residue may be used as fertilizer or similar, but is unlikely to possess high economic value However, the technology needs are fairly modest and well known, and operational costs are low With a successful secondary stage, this system might prove adequate

A second process is potentially available which could reduce as much as 99% of the waste load carried in the effluent discharges This "protein separation" or cold rendering technology represents a high-technology approach However, it is likely that costs for installation of the equipment will be high Recovery of the organic matter is a high priority for its use as a value added by-product Existing investors are interested in marketing the producton existing world markets

The protein separation system is efficient enough to deal with any wastewater quality, and therefore is less contingent on internal operational changes in the fishmeal plants Potentially, this system might be efficient enough to obviate the need for further treatment steps In addition, once installed it has fairly low operational costs However, this system requires the continued use of proprietary chemicals and supplies unavailable in Peru It also has high testing and installation costs In areas of limited space availability, the system might prove attractive either as an "internal" investment for an individual fishmeal plant or as a joint investment program between several plants and/or other investors interested in acquiring the waste streams

Secondary treatment would be achieved through some sort of aquaculture program An aquaculture process added as part of a secondary treatment system has the potential to produce a high value added product which can generate additional jobs and income to offset treatment costs The aquaculture will benefit from the high nutrient content contained in the wastewaters after initial treatments in the primary systems With the physical treatment system, it may be necessary to dilute the water entering the aquaculture system because of nutrient loads that may be up to 25 times higher than could be taken up or indeed tolerated at all by the algal cultures

This could further add to the costs of the system through the need to pump seawater for dilution purposes With the protein technology system, a better quality water could be achieved without the need for seawater dilution

The optimum aquaculture species remain to be determined A number of interesting algae have been identified as potential candidates They have in common a high biomass yield allowing rapid harvests within the parameters set by the intermittent operation of fishmeal plants

Currently, there is limited knowledge on how to best grow algae in this type of wastewater As a result, a pilot stage will need to focus on the cultivation potential of these species under local conditions, as well as the potential economic return of the resulting product Only then can a realistic recommendation emerge

A feature common to the aquaculture stage as well as any tertiary stages (rapid infiltration or wetlands) are large land requirements Where space is at a premium, the practicality of some of these approaches is lower as sufficient land at a reasonable cost may be scarce In areas such as Paracas, where land is abundant, these approaches appear feasible, particularly as ancillary benefits may be acquired in the process

Rapid infiltration systems might be an attractive approach where geomorphological conditions and space allow and there is a need to get as close to zero discharge as possible This is particularly true if a secondary stage is relatively ineffective in treating the wastewater RI systems lack ancillary benefits, but require minimal off-season maintenance, making them attractive for remoter locations where receiving water quality is critical

Wetlands as a tertiary option are a long term approach that could combine final "polishing" treatment with the production of economically valuable products and/or high ancillary benefits in terms of enhancement of natural values Establishing a successful wetland requires specific local hydrological and climatic conditions and ample space, and is sensitive to changes in flow quantity and quality of the type typical of fishmeal plants Still, wetlands may be an attractive way to bring development and government entities into the program in joint public-private investments

4 3 Conclusion

Many of the estimates in this study were made on the basis of minimal data that specifically apply to the Peruvian situation However, it is evident that an ability to address wastewater problems related to the Peruvian fishmeal industry can have significant impacts in improving the water quality of coastal waters This will have benefits to tourism, wildlife, and human health This project has generated much interest among researchers in the field because of the nutrient value of the waters being discharged Currently, this value is lost and actually provides a negative benefit to the country Recapturing of the nutrients for conversion into a value added product could have major economic implications Pilot studies will allow for

collection of the additional data that will be needed to determine the design and feasibility of a treatment and aquaculture treatment system Moving forward to a pilot stage is recommended on the basis of the information gathered to date

5. BIBLIOGRAPHY

1 Albertson, M , 1992 **Wastewater Treatment with Advanced Integrated Pond Systems,** (Proceedings) Colorado State University

2 Attaway, D & O Zaborsky, eds , 1993, **Marine Biotechnology, Volume 1 Pharmaceutical and Bioactive Natural Products,** Plenum Press, 1993

3 Ayala et al ,1987 **Chilean Experiences on Microalgae Culture,** in "Algal Biotechnology", Stadler et al , eds , Elsevier 1987

4 Bavor & Mitchell, eds ,1994 **Wetland Systems in Water Pollution Control,,** series in Water Science and Technology, vol 29, 1994

5 Corbitt, R ,1990 **Standard Handbook of Environmental Engineering,** Corbitt, McGraw-Hill, 1990

6 Cyanotech ,1996, **Cyanotech Corporation corporate information,** available on World Wide Web, http//www cyanotech com

7 Eisenberg, D ,1981 **Productivity, Harvestability and Fermentability of Microalgae in Paddle Wheel Mixed high Rate Ponds,** Ph D Dissertation, Univ of California, Berkeley

8 Fox , R D , 1987 **Nutrient Preparation and Low Cost Basin Construction for Village Production of Spirulina,** in "Algal Biotechnology", Stadler et al , eds , Elsevier 1987

9 Grady, C P & H Lim, 1980 **Biological Wastewater Treatment, Theory and Applications,** Marcel Dekker, Inc, 1980

10 Gudin, C , 1987 **Why Bother with Microalgae?,** in "Algal Biotechnology", Stadler et al , eds , Elsevier 1987

11 Hall, T W , 1985 **Bioflocculation in High Rate Algal Ponds—Implementation of a Innovative Wastewater Treatment Technology,** Ph D Dissertation, Univ of California, Berkeley

12 Hammer, D , 1989 **Constructed Wetlands for Wastewater Treatment Municipal, Industrial and Agricultural,** Costello, Lewis Publishers, 1989

13 Nurdogan, Y , 1988 **Microalgal Separation from High Rate Ponds,** Ph D Dissertation, Univ of California, Berkeley

14 Ramani, R and W J Oswald, 1975 **Studies of Pond Performance and Pilot Algae Separation at Napa Sanitation District,** report by CSO International to Napa Sanitation District, Takashi Asano Ed

15 Reed, S et al , 1995 **Natural Systems for Waste Management and Treatment,** McGraw Hill

16 Shuval, H , 1988 **Rationale for Engelberg Guidelines in Human Waste Health Aspects of their Use in Agriculture and Aquaculture** 18-19 IRCWD News, No 24/25, pp 18-19

17 Stadler , T et al , eds , 1987 **Algal Biotechnology,** Elsevier Applied Science

18 Tapie, P & A Bernard, **Microalgae Production Technical and Economic Evaluation,** Biotech & Bioeng , vol 32 873-885, 1988

19 Vites , 1992 **Plano del area ecológica de la laguna de Villa zonas de vida natural,** Boletín de Lima, vol XIV, No 83 , pp 65-70

20 Vonshak, A and R Guy , 1987 **Photoinhibition as a Limiting Factor in Outdoor Cultivation of *Spirulina platensis*,** in "Algal Biotechnology", Stadler et al , eds , Elsevier 1987

21 USEPA, 1983 **Municipal Wastewater Stabilization Ponds** , EPA-625/1-83-015, 1983

22 USEPA (1986) **Utilization of Saltwater March Ecosystems for the Management of Seafood Processing Wastewater,** USEPA, Alabama Dept Of Environmental Management, Marine Environmental Sciences Consortium, Taxonomic Associates, EPA 904/9-86 142, 1986

23 WEF , 1994 **Pretreatment of Industrial Wastes (MOP FD-3),** Industrial Wastes Committee, Water Environment Federation, 1994

24 Wheaton & Lawson, 1985, **Processing Aquatic Food Products,,** John Wiley & Sons Publication, 1985

APPENDIX 1 RESPONSES TO DRAFT COMMENTS FROM USAID

Comments from USAID-Peru (received 11/29/96)

General

1) It is suggested that the discussion of fishmeal and domestic wastewaters should be completely separated What is the reason for a focus on fishmeal effluents?

The fishmeal and domestic wastewater sections should be considered as separate programs The primary coastal water quality issue confronting Peru are wastes from fishmeal plants Initially it was suggested that a discussion of domestic wastewaters should be included in the feasibility study with a view towards developing joint treatment systems Such systems might have attractive cost-benefit ratios and create systems with joint involvement by various segments of society, including local authorities, national government, NGO's and private industry However, review of the treatment needs and characteristics established that such joint treatment would not be technically practicable As a result the domestic and fishmeal wastewater options are presented separately, with more weight given towards discussion of fishmeal wastes

Fishmeal wastes represent the most serious water quality program along the Peruvian coast There are, as mentioned in the report, a number of programs in progress to confront domestic wastewater treatment issues Development of programs to deal with fishmeal wastewaters are less developed It is concluded that the primary focus of a potential pilot phase should be on fishmeal wastes

2) What local experience and support for aquaculture exists? Who would fund these activities?

Peru has with substantial knowledge and trained personnel on aquaculture issues However, to our knowledge there is only limited practical experience, not only in Peru but worldwide, in algal aquaculture It is understood that *Spirulina* and *Dunaliella* have been cultured in the past Information suggested that *Spirulina* culture was successfull but a lack of markets at the time precluded further development Various other types of animal aquaculture are ongoing in Peru at the present time (e g in Tumbes and Pucallpa) which indicates that professional expertise and labor is available to develop an aquaculture indutry

Fishmeal

1) What contingencies exist in the eventuality that stick- and carcass water recovery is not implemented to the point assumed in the report?

In conversations with Ministry of Fisheries officials and reviews of representative Environmental Management plans (PAMA's), from the fishmeal industry it is apparent that recovery of solids present in stick- and carcass waters can be highly cost-efficient Consequently

many if not most Peruvian fishmeal plants are in the process of implementing the recovery of these products Such recovery systems represent a fairly significant capital investment but quickly becomes cost efficient It is assumed that stick- and carcass water treatment will be the first systems installed pursuant to PAMA commitments Treatment of pumping water is more difficult to justify on cost-efficiency grounds and therefore represents a potentially more significant treatment problem for the industry as a whole

Recovery systems for carcass water are based on coagulation of blood products by heat treatment As a result there is virtually no liquid discharge as water is removed as steam A minor stream of condensation water is present, which although potentially high in pollutants, represents a minor overall contribution Recovery systems for stick water also result in a much reduced liquid discharge volume Currently available separators (for example Tricanter centrifuges) recover almost all solids

The volumes of stick- and carcass water are small in relation to pumping water Typically stickwater volumes are 1/10 or less than those of pumping water, and carcass water volume is roughly a quarter that of the stickwater Even if only incomplete recovery is implemented for these waters, remaining wastewaters from these sources could be added to the envisioned system without affecting the overall conclusions

3) What is the proportional contribution to water pollution from the different wastewater streams?

See answer to previous comment

4) The proposal to use high-tech cold-rendering protein recovery is inappropriate, due to the dependence on importing proprietary chemicals Are these chemicals available in Peru?

The proposed cold-rendering recovery system was included as an option to present a system that might be able to handle the full wastewater load even if no internal waste minimization efforts were implemented The high loads in such wastewaters necessitate the use of fairly specialized technologies A major drawback to such a system, as discussed in Section 4 2, is the need to depend on imported chemicals and technologies The chemicals are proprietary and not available in Peru The option was considered of interest for this report for two reasons 1) the ability to handle the highest loads, and 2) the interest on the part of the U S manufacturer of the system to enter into joint ventures to set up such systems, which could offset investment costs

5) The unit capacities for different stages in the conventional primary treatment process are rated differently Shouldn't the system be designed after the lowest rated step?

The unit capacities of the individual processes are necessarily different for the following reasons

a) The preliminary layout is based on manufactured items sold as "shelf" items of equipment designed to operate under a range of flows To design and manufacture for a specific flow would be expensive, and would be unwise until optimum flows have been determined in pilot experiments All processes should be variable within manufacturers specifications

b) No specific samples of data to work with were available for the study It is imperative to set up a pilot system to operate in a variable manner to deal with specific site variations

6) Why are three different application-drying cycles presented in the discussion of RI systems?

The exact application-drying cycle for a RI system is site specific and cannot be determined without an understanding of site hydrology, geomorphology, detailed characteristics of the wastewater in question, and the site specific treatment objectives Cycle optimizing is a central feature of the pilot stage The various cycles presented in the report represent a selection of "typical" cycles used in similar RI systems Naturally, the shorter the necessary drying period, with respect to the application period the less surface area and number of basins that would be needed to treat a given volume of wastewater

Domestic

1) What are the effluent characteristics of domestic wastewaters?

It is reasonable to expect that the AIWPS lagoon would achieve 85% or higher removal of influent organics and solids For typical U S systems this result in an effluent of approximately 30 to 45 mg/l of wastes

2) There are no cost estimates provided for the AIWPS system

Construction of non-mechanical lagoon systems is highly labor intensive In the U S construction costs run in the range of US $25,000 to $30,000 per acre of pond In a town with population 1000 with a complete sewer system an average flow rate of 3 7 l/s (319 l/capita/day) A lagoon to service this amount covers approximately 1 8 ha Total U S construction costs would run about US $100,000 to $120,000 without pumping facilities

In Peru it is expected that per capita flows will be much lower than U S values If unit flows are half the U S value the size of a system for 1000 people would be 0 9 ha Construction costs in the U S would be US $50,000 to $60,000, which would further need to be adjusted to Peruvian labor costs

3) What size population can a AIWPS handle, and what are the land requirements?

The AIWPS system could be applied to communities ranging from a few houses to about 10,000 people Beyond that level different types of system will probably be more cost effective

depending on local economies, land and power availability The sizing of these system is site specific but typical per capita land requirements would fall in the 7 to 10 m^2/capita/day

Comments from Antonio Bernales, CONAM, via USAID-Peru

1) There is an error in describing the uses of fishmeal

The error has been corrected in the report (Section 1 4 1, page 7)

2) It is necessary to consider the experiences of the Paracas Project, as well as the various treatment programs currently in process of implementation in various parts of Peru for pump water treatment

The results of the waste minimization project of the Paracas Project were not included in this feasibility study since no public information of conclusions or recommendations were available Treatment technologies and process modifications that can dramatically reduce wasteloads from fishmeal facilities are well known, however The report includes options that assume a degree of internal waste minimization (conventional primary treatment) as well as options that do not assume waste minimization (cold-rendering protein recovery)

Many plants in Peru are currently implementing various schemes to reduce the waste load from pumping waters Several of these existing efforts are indeed similar in structure to the conventional primary treatment proposed, while others, like DAF systems using polymers, are intriguing possibilities The ultimate feasibility of any system should be determined on the basis of an ability to recover material as a value-added product

Existing systems are capable of removing 70% of solids and 80% of oil, an efficiency similar to the proposed conventional primary treatment system However, as discussed in the report, this level of efficiency is unlikely to produce an effluent acceptable for direct discharge into the receiving water The residual will still require a secondary level of treatment, for which purpose the aquaculture step was introduced The basic purpose of this report is to deal with the residual from the fishmeal plants Treatment of the waters will be simplified the more internal improvements are introduced in the fishmeal plants

The cost and effort of treatment depends on the volume and load in the wastewater discharged by the plant If adequate internal waste minimization is introduced, the "back end" treatment requirements will be reduced However, since the application of treatment and minimization efforts currently are patchy and piecemeal, several options were proposed to deal with various contingencies, including the case where no internal pump water treatment or minimization

3) The aquaculture of *Artemia salina* should be evaluated as an option for additional species

Aquaculture of *Artemia salina* is undoubtedly an interesting possibility as an adjunct to algal production *Artemia* aquaculture is easy, fast and yields high densities In addition there is a worldwide market for this species and its use as a food in aquacutlure operations As discussed in the report, aquaculture of animal species were not originally discussed in the report primarily because animal aquaculture does not provide a net treatment effect on the wastewater This was outlined as a basic requirement of the system However, the ease of culturing *Artemia* suggest it could be added to the system as an adjunct providing further value-added However, it is felt that this should be done after treatment is implemented and operational