PN-ACS 221
10015

Phase 1 Report

Pilot Study
Use of Porous Geochemical Barriers at Mining Facilities in Peru

Submitted to

USAID/Lima
Office of Agricultural and Rural Development
Mr Alan Davis, Director
Lima, Peru

Submitted by

Dr Joseph P Martin
Drexel University
Dept of Civil & Architectural Engineering
Philadelphia, Pennsylvania

In co-operation with

Dr Dennis G Grubb
Georgia Institute of Technology
Dept of Civil & Environmental Engineering
Atlanta, Georgia

October 1996

USAID Purchase order 527-0368-0-00-6219-00

Bibliographic Elements

PN-ACS-221

TITLE

Pilot Study/Use of Porous Geochemical Barriers at Mining Facilities in Peru

AUTHOR

Joseph P Martin Dennis G Grubb

PROJECT NUMBER

527-0368 - Sustainable Environmental and Natural Resources Management

CONTRACT NUMBER

PO 527-0368-O-00-6219-00

SPONSORING USAID OFFICE

Environmental and Natural Resources

CONTRACTOR NAME

Drexel University Department of Civil and Architectural Engineering

DATE OF PUBLICATION

October 1996

STRATEGIC OBJECTIVE

SO4 - Improved Environmental Management in Targeted Sectors

Contents

Scope
Program Description
Background
Summary
Conclusion

Appendix A Meeting Report
Appendix B Site visit Report
Appendix C Water quality test results
Appendix D Copy of Draft Proposal to Buenaventura

Scope

This is a report on a Phase I investigation conducted in Peru during May and June of 1996 The topic was the feasibility of using porous geochemical barrier (PGB) technology to mitigate the negative environmental impacts of mining activities in Peru The goal is development and implementation of cost-effective protection of water resources The investigators were Dr Dennis Grubb of Georgia Institute of Technology and Dr Joseph Martin of Drexel University The project officer is Mr Alan Davis, of USAID/Peru In the early part of the visit, the investigators were assisted by Dr Frederick Freeman of USAID/LAC

The project continued in the summer with laboratory testing of samples and discussions with mining firms to continue the project into a Phase II This would entail a large-scale, multi-year demonstration project that would both provide mitigation at the host sites and also support research into expanding the applicability and scientific basis of the technology

Discussions on a Phase II project did not come to an agreement with one major mining company, but are still ongoing with another company The main purpose of this report is to document activities and conclusions of the visit to Peru The focus of Phase I was to assess the physical setting, practices, and environmental problems of hard rock metal mining in the Andean regions of Peru The task was then to determine if the original PGB concept was sound, either as originally envisioned or with appropriate modifications Major tasks included

1 Discussions with a range of governmental and non-governmental oganizations

2 Presentations to the mining community to initiate a technology exchange

3 Site visits to two mines to establish typical conditions

A summary of findings is included in the main report More detail on the first two tasks is included in Appendix A The third task is addressed in detail in Appendices B and C

As guests of Buenaventura, the investigators visited two active mines Site #1, Julcani, is in the Huancavelica Department (district) and is part of the upper Amazon valley Site #2, Uchucchacua, is in Lima Department and drains to the Pacific Locations are shown on the attached Figure 1 The trip from Julcani to Uchucchacua passed the La Oroya smelter and through the western edge of the Cerro de Pasco mining district Other aspects of mining impacts on the environment were observed

Program Description

As expected, the scope of the project was adjusted as the investigation proceeded Negotiations with mining companies for Phase II commenced early, but are still ongoing as of this writing (10/21/96 to 10/29/96) Hence, it is useful to reproduce the Program Description from the contract as a reference

I. Purpose

USAID Peru will enter into a Purchase Order with Drexel University which will undertake Phase I of a pilot study designed to establish the preliminary feasibility of using porous geochemical barriers at a mining facility in Peru The focus is on mitigating adverse effects of leachate from waste rock, tailings ponds, heap leach pads, and detention ponds in the Andes and upper Amazon Valley The intent is to passively protect water supplies using local soils and other materials The local soils may consist of iron-rich (highly absorptive) sands that are amended either directly or in sequence with highly absorptive materials such as diatomaceous earth, limestone, spent tailings, and industrial byproducts such as fly ash, kiln dust, sugarcane bagasse, rice husk ash or smelter scrubber ash All of these materials are available in Peru

A porous geochemical barrier will improve local groundwater and surface water quality Surface water will not only be improved with respect to metals content, but also alkalinity, pH, chemical oxygen demand, and suspended solids Thus, in addition to better protecting the environment, there may be substantial benefit for hydroelectric generation plants which are located in the Andean region as less aggressive surface water will translate into an increased operational life for the turbines The use of porous geochemical barriers can also be integrated with wetlands projects or other forms of land reclamation in mining areas that are intended to improve ecosystems and water quality

Once the geochemical barrier has exceeded its design life, i e , its absorptive capacity for heavy metals has been exceeded, the barrier itself can be a retrievable source of heavy metals by heap leaching The inert aggregates of the barrier can also be integrated into a new barrier A new geochemical barrier can be constructed either in the same or another downgradient location

II Specific Tasks/Components

Pilot Study Phase I

A technical survey will be conducted to establish the preliminary feasibility of using porous geochemical barriers in a pilot study at a mining facility in Peru The following tasks are expected to be accomplished within the first phase of a two-phase pilot project,

Evaluate the state-of-the-practice of the mining sector active in the Peruvian Andes to identify the current types of mining activities, the nature of the contaminates involved, and how a porous geochemical barrier (and its configuration) can be implemented given the existing technological, financial and space constraints of these facilities Identify and establish co-operation with a local partner in the Peruvian mining industry In co-operation with this partner, select a mining facility at which a pilot study of the porous geochemical barrier can be conducted Collect and characterize waste stream samples from the site

Draft (in final) a letter of agreement or some other acceptable form of written agreement that clearly defines the objectives of the second phase of the study This document must also contain measurement indicators (to judge progress and results annually) responsibilities of both parties (Vendor and local partner) under Phase II of the pilot study, and the amount of counterpart resources (both cash and in-kind support) that will be provided by local partner(s), written approval of the agreement(s) will be obtained by USAID/Peru These agreements will be used by the Vendor to secure resources in order to reduce costs under Phase II The technical results of the first phase will, in part, determine whether a second phase is recommended However, the degree to which the Vendor can secure firm and significant local counterpart contributions for Phase II of the pilot study is another important factor

To identify and establish co-operation with a local laboratory in Peru that can provide technical assistance with chemical and analytical testing of contaminants and geotechnical index testing of soil-like materials

To identify local Peruvian soils, soil amendments, and industrial byproducts and their suitability and availability for use as absorbent and construction materials in a porous geochemical barrier collect samples of select soils, amendments and industrial byproducts to conduct a preliminary assessment and characterization of their engineering properties to establish the technical feasibility of a porous geochemical barrier at the site chosen for the pilot study

In order to ensure wider knowledge of the pilot project, complete the design of and execute a strategy in co-operation with USAID/Peru that results in some initial announcements of the pilot study in the local media, particularly in the mining society bulletin and trade newspapers

Pilot Study Phase II (not funded under this Purchase Order)

Phase II of the pilot study involves a more sophisticated analysis of the technical feasibility of the use of porous geochemical barriers to attenuate contamination emanating from Peruvian mining activities Key elements include (a) evaluation of the performance of the available soils, amendments, and industrial byproducts to attenuate mining leachate, either singly, sequentially, or in combination, and identify controlling factors, (b) the demonstration of the feasibility of porous geochemical barriers with pilot scale models (c) employment of existing computer codes to develop quantifiable design methodologies with experimental data, development of an economically staged method for engineers and regulatory agencies to evaluate the suitability and anticipated performance of regional soils and industrial byproducts to as components of porous geochemical barriers, and (e) the design and construction of a pilot scale barrier at the site and evaluation of its performance

III. Relationship to Mission Strategy

This activity is consistent with USAID/Peru's strategic Objective No 4, "Improved Environmental Management in Targeted Sectors" which includes the identification of low-cost environment and natural resource (ENR) pilot projects which are innovative and potentially sustainable, promote pollution prevention measures, and also have an impact on the brown-green environmental agenda If successful, this low technology procedure could impact on hundreds of locations in Peru's highlands where working mines are contaminating the environment and in areas where sites have been abandoned Other donors such as the Inter-American Bank are implementing environmental projects in Peru's mining industry and such pilot projects may help influence such activities

IV. Reporting

Under the First Phase of this project, the Vendor will be responsible for submitting a final report describing all aspects of this first phase, including those items mentioned in Section III above entitled "Specific Tasks/Components " In addition, this report will update any technical or operational information furnished to date describing Phase II of the Pilot Project, including its budget and timeframe

Five printed copies of this report, in English and in Spanish, and a diskette containing the document in final form using Word Perfect 5 1/5 2 for Windows will be submitted to USAID/Peru

Compliance note

The contract requires execution of an agreement with a local partnership, and site-specific sampling and testing At least five firms expressed serious interest in participating in the project However, it was slowly revealed that there is an unwillingness by Peruvian firms to financially sponsor environmental research, especially with cash as required by the USAID protocol A mine tour was generously financed by Minas Buenaventura, at an approximate cost of $6500 It was thus anticipated that at least one of the two sites visited would be the host for the pilot demonstration site, as documented in Appendix A Accordingly, water and solid samples were taken at both sites Due to "holding time" concerns, Envirolab-Peru, which follows U S EPA protocols, was commissioned to do the water sample analysis

The PGB team initiated negotiations with Buenaventura, as described in Appendix A, including submission of a draft proposal, as reproduced in Appendix D Despite continued discussions, an agreement could not be reached which involved appropriate resource committment on behalf of the mine Consequently, the water sample analysis results are included in this report to characterize typical mining environmental data This supplements data generated by Buenaventura which is selectively reproduced in Appendix "B" While neither Buenaventura site now appears likely to be a pilot study host site, the descriptions in Appendix B are still quite valid in illustrating typical mining conditions

Discussions with Corporacion Minera Nor Peru (Northern Peru) were initiated during the in-country visit, and have continued Dr Grubb is returning to Peru at the time of this writing (10/21/96-10/29/96) to visit the Quiruvilca Mine located about 100kM due east of Trujillo This trip is completely financed by Corporacion Nor Peru and is evidence of their keen interest in this technology It was not possible to visit the site during the USAID-sponsored visit A supplemental report to the Phase I report will be provided to USAID/Peru as a courtesy

Background

The purpose of this section is to place the project in perspective, illustrating the main features of the Peruvian mining industry, and the associated environmental problems

Mining Industry in Peru

Peru is rich in mineral resources, distributed among three basic categories

- Oil & gas in the Amazon valley lowlands With the need to install supporting infrastructure, hydrocarbon extraction is necessarily on a large scale

- Low technology ("artisan") mining for gold in soils and rivers, primarily in the upper Amazon valley and lowlands

- Hard rock mining for a range of metals in the Andes, on both the Amazon and Coastal watersheds Mining is done on all scales, but there are approximately 50 large mines

The last category is the subject of this study In addition to the mining and onsite ore concentration facilities, there are several smelters, notably one of the world's largest at La Oroya While the waste material from these smelters may produce environmental problems of similar nature as mine or tailings leachate, the smelters are not part of the scope of this study

Metals mining has been done for thousands of years in the Andes In pre-Columbian and colonial times, ore processing consisted of variations on the basic method of extremely fine grinding and gravity separation,followed by refining in charcoal smelters

Even with this history, there are many opportunities to re-open closed mines, expand existing ones, and develop new sites Peruvian mining activity has increased recently due to restoration of stability, increased worldwide demand, depletion of supplies elsewhere, and difficulties in opening new mines in North America and Europe The latter includes environmental regulation costs and community opposition

Mining accounts for over 10% of Peru's Gross Domestic Product (GDP), but is over 50% of the nation's exports The main products are silver, zinc, lead, copper and gold A range of other metals such as tin, molybdenum and cadmium may also be recovered Peru is ranked seventh worldwide in non-ferrous and non-alumina metals, with the highest individual ranking being silver, with a third place world standing Consequently, while mining is critical to its economy, Peru is not in a position to influence the "world price"

of any of the metal commodities

The geology of the Andes is too complex to describe here The main point is that several metals can be recovered from the same ore body, hence the generic label "polymetal" mine The rock surrounding the ore veins, which must be removed to provide open pit or tunnel access, is also quite varied, even at a single mine

Most of the copper production is obtained from open pits at low and medium altitudes in the South, an extremely dry area The focus of this project is on the Central and Northern high altitude mines, as they have the highest potential for impacts on water resources on either side of the Continental Divide These mines are in rugged terrain which usually dictates ore recovery by tunneling, on-site ore concentration due to transportation difficulties, and on-site disposal of waste rock and tailings Waste rock is generated by tunnel construction, while tailings are the solid byproduct of ore concentration processes These waste materials are described in more detail below These are described in more detail below There are about fifty major mines Major copper mines process on the order of 10,000 to 50,000 metric tons/day Major polymetal mines are classified as those which process from 350 to 10,000 metric tons/day

Mining Operations

The metals sought are rarely present in the ore as distinct and visible veins, but are mineralized as part of the ore matrix, generally only a few percent of the ore mass It is necessary to process the ore locally to concentrate the saleable product The resulting concentrate is shipped to a smelter for further refining, including separation of the different metal constituents

Two stages are required in ore concentration grinding and extraction Most extraction processes involve acidic and/or cyanide leaching of a granular material to solubilize the desired metals

Heap leaching is a technique which involves coarse grinding of the ore and extraction with an acidic solution spray for an extended period This technique requires a large surface area The acid solution is collected, the metals contained therein are recovered, and the spent acid solution is re-used The tailings are a relatively dry, coarse material, and are disposed of by dumping in a pile which may or may not have hydraulic containment

Metals concentration at most mines is a mill or plant operation The ore is first ground to a sand or silt size to increase the exposed surface area The metals are then extracted in a continuous, high volume process A large amount of water to convey the solids as a slurry Depending upon where and how much water is added, and other treatments, the final tailings slurry may

or may not be acidic

Waste disposal

The tailings suspension is deposited in ponds that are often formed by dams in nearby ravines or valleys The suspended solids settle out of the slurry suspension The surface water is decanted, and much of the conveying liquid contained within the porous particulate mass drains out the bottom The result is a tailings pile However, after the initial gravity dewatering, seepage from the base of the tailings pile will continue Tailings slurry deposition methods that produce a physically stable mass structure also tend to produce an adverse slope compared to the local topography, ponding incident rainfall and runoff from upland areas on the surface until the water drains by seepage through the granular mass

Constructing adits, drifts and shafts to access thin ore layers yields quantities of waste rock that exceed the tailings volume by several orders or magnitude This material has no economic value, so it is usually dumped as close to the mine entrance as possible Often, a talus pile is formed directly downslope from a hillside adit Consequently runoff down valley sideslopes as well as incident rainfall percolates through the waste rock piles

Environmental concerns

A significant environmental concern at polymetal mining sites is that most of the heavy metals are toxic to human, animal and aquatic health in their mobile forms Mining exposes the metals to mobilization A second problem is that process, waste pile or mine drainage leachates are often very acidic (an environmental concern itself), and the acidity fosters mobility of the metal species A third problem is the presence of other toxic or deleterious constituents present in the effluents either due to use in milling (e g , cyanide), or extracted onsite from the concentrate in order to condition it for the next step, smelting (e g , manganese) Effluents also contain other pollutants lumped as total dissolved solids, and sanitary wastewater constituents

Liquid Wastes

Many miners live at mining camps or nearby villages, usually with their families They generate thousands of gallons of sanitary wastewater daily, which may or may not be treated before discharge, usually into a nearby stream Untreated or poorly treated sanitary sewage presents a health threat to downstream residents, especially in dry seasons when the effluent may be a substantial fraction of the streamflow The sanitary sewage problem was heretofore unrecognized, however, the PGB technology can be applied to this problem

One of the more ubiquitous pollutants in mining districts is acid mine drainage This results when the parent rock contains iron pyrites that acidify upon exposure to air and water Pyrite content in the bedrock is pervasive in Peru Mine tunnels intercept groundwater percolating through the rocks above the mine Where possible, access tunnels into hillsides, or drifts, are sloped upward to assist dewatering However, this short-circuiting of the natural drainage pattern remains after the mine is abandoned, such that acid drainage continues indefinitely

Acid leachate may also drain from tailings piles Even if the pile is initially placed in a pervious but non-hazardous form, and drains as described earlier, acid drainage will result if the ore contains pyrite The same situation will occur at waste rock piles

The conventional solution to acid mine drainage and acid mine waste leachate is bulk treatment with lime This is physically feasible at most Andean mines, as limestone is widely available However, the quantities of lime required and the transportation difficulties make such treatment very costly The problem is exacerbated when it is necessary to extend the pH into the basic range to induce precipitation of dissolved metals Lime treatment is not a permanent solution It ceases when the mines is abandoned

Summary of Findings

Support for environmental protection

Appendix A documents dozens of meetings with mining firms, mining and environmental associations, government agencies and universities, which involved a hundred or more conversations These many discussions not only indicated awareness and concern for negative environmental impacts from mining but a high interest in cost-effective and sustainable solutions This is driven by a combination of care about Peru's image, continued economic development, and protection of natural resources especially rural water supplies The mining community is very well educated and experienced The capability of Peruvian and international firms to extract value from the mountains and foster cash economies in rural areas is not in question All parties recognized the importance of environmental problems with abandoned and older sites, and also saw that new projects tend to be on a larger scale and could be subjected to onerous regulations The interviewed parties were equally interested in technologies to prevent or mitigate impacts, and the framework in which environmental policies are developed and executed An underlying theme was a desire to avoid the adversarial approach to environmental protection perceived to have developed in the Northern Hemisphere

Four critical points in this regard are,

- There is a high degree of inter-industry co-operation Mining companies don't compete with each other for either public favor or cost advantage, but against the world market There is an attitude in favor of free exchange of information on environmental protection, rather than seeing such technology as a proprietary advantage Many mines have the same problem in common, and the mining community is quite collegial

- Mining firms are aware that they are often the first users of the water resources that are critical to expanding the national economy Irrigation is being expanded downstream of most mines on the Pacific drainage Not only is the Amazon Valley under world scrutiny, but many mines ultimately drain to it through rivers such as the Rio Mantaro that are developed for both power generation and upland irrigation In either case, the sanitary wastewater problem can be of equal importance as the acid drainage due to the potential to disperse infectious diseases

- There is a national effort not only to expand the economy but also to resettle the highlands with families who migrated to coastal cities due to recent instability Mining is not only a major source of national export income, but it is a major component of the cash economy in the Andes and its needs drive educational, health and infrastructure development in remote areas

- Many workers and their families rotate living between the mining camps and their home towns, villages and farms These are generally downstream of the mines Environmental impacts are real to the workers

The result is very refreshing, everybody wants mining to prosper, and to do so in a manner that does not damage other national interests The mining companies, mostly Peruvian owned and operated, want to do the right thing It not "just business" However, the concept of industrial funding of environmental protection is not well established in the mining culture, especially in Peru This constitutes a hurdle to continued collaborative environmental work of all kinds

Physical Conditions

This is a summary derived from conversations, research, and the mine tour At some mines, the cyanide used in the concentration process is of concern However, the negative environmental impacts

at both of the sites that were visited generally arise from the nature of the ore body, rather than from the milling process Julcani has acid mine drainage and acid tailings and waste rock drainage problems due to a high pyrite content, in the ore and the bedrock The Uchucchacua ore has a high manganese content With the negative environmental impacts at the sites visited being generated downstream of the mill, solutions must also be executed between the mill and the impacted water resources Consequently, the mine tour report (Appendix B) does not include a review of the mining and milling processes

Three sources of impacts on water supplies and aquatic life were identified

1 Generic mine and tailings drainage, with both the acidity and the heavy metal solutes being problems

2 Discharge of solutes that are specific to a site due to the milling process or the unique ore body mineralogy

3 Untreated sanitary wastewater effluent

The field trip illustrated three features of Andean mining that dominate the feasibility of solving environmental problems

1 Difficulty in disposal of mining wastes in terms of both stable sites of required volumetric capacity and sites that minimize the potential for offsite impact, i e , are on natural drainage routes

2 Scarcity of water at upper elevations, such that water diverted for ore processing must be returned to streams to maintain downstream potable, irrigation and aquatic life sustenance supplies

3 The impermanence and cost of conventional treatments

The rugged terrain and remote locations of mining sites, severely restricts large-volume materials movement Solutions must be "appropriate", i e employ the resources immediately at hand Since much of the water available in the watershed in which a mine is located must often be diverted to process and sanitary uses, solutions must focus on removal of pollutants and contaminants followed by release of the cleansed water Evaporative consumption of water is generally not favored The lack of suitable sites for disposal of wastes of all kinds means that it is desirable that sludges not be generated during treatment

The sites visited are typical in that effluent streams emerge at many locations over a wide area and range of elevations This greatly complicates conventional interception, collection, treatment and discharge solutions Acid mine drainage is a

challenge at most mines in Peru The primary manifestations are

1 Acid mine drainage emanating directly from mine adits or ground water seepage faces

2 Acid leachate from tailings and waste rock due to oxidation and acidification of the iron pyrite content in the ore and matrix

Despite the different origins, these two problems intersect in the drainage paths from the mine area, and may also overlap sanitary sewage disposal concerns, and can have a common solution at the point of juncture, i e the proposed porous geochemical barrier technology

Conclusion

The Phase I investigation showed that the passive PGB technology as initially conceived is feasible, but with modifications Positive features include passive operation and long-term solution that can be readily expanded, if needed From a deployment standpoint, PGB can satisfy the need for dispersed discharge site treatment, compared to the bulk treatment with lime that is the current practice, PGB offers both cost and operator time advantages To remove heavy metals from acid drainage, PGB is based upon a less dramatic pH adjustment than would be necessary with pH adjustment alone, providing reducing conditions are generated as well

Sanitary wastewater disposal at mining camps is a serious problem that has not received much attention Controlled co-disposal of domestic wastewater and mining effluents will both enhance the metals removal process, and mitigate the wastewater disposal problem as well Another operational advantage is "sludge production" in an entrapment mode The intent is to force solute precipitation or other removal mechanisms to occur within, or prior to reaching, the PGB medium

Iron-rich and silica-rich materials that improve both efficiency and permanency of the solute removal are available The initial focus on the use of lateritic soils as the "sorbing" soil material does appear to be practical except for mines in the Eastern Cordillera, due to the distribution of lateritic soils Instead, a variety of locally obtained soils and industrial byproducts are available

The status of the project at this time is continued negotiation with mining companies to participate in the demonstration/research projects of Phase II

Appendix A

Meeting Log for May-June 1996 Visit

USAID/Peru Porous Geochemical Barriers Project

Drexel University - Georgia Institute of Technology

Friday, 5/24/96

Dr Dennis Grubb, Georgia Tech, Co-PI, PGB team, arrival in Lima

Meeting @ USAID ORD
Alan Davis, USAID/Peru ORD
Gilbert Jackson & Frederick W Freeman, USAID/LAC
Robert Armstrong, J Miguel Angel Yepez, US Embassy
Jan Mueller-Volmer, Enviro Pollution Prevention Proj (EP^3)
Kenneth Fucik, Seacrest/EnviroLab Peru

Described ongoing and completed USAID environmental projects
Discussed PGB project background and scope
Discussed safety & security procedures in Lima and on mine visit
Discussed contacts to be visited

Action agreed that Dr Freeman would accompany PGB team until 5/31/96

Sunday, 5/26/96

Joseph Martin, Drexel University, Co-PI, PGB team, arrival in Lima

Meeting @ Seacrest/Envirolab Peru Laboratory
Kenneth Fucik, Seacrest
Luis A Bueno Carbajal, Envirolab Peru
Carmen Catter de Bueno, Int'l Analyt Svcs S A

Toured laboratory facilities, discussed EPA protocols
Discussed parameters for water sample analysis, provision of sampling equipment, and shipment of soil samples from Envirolab to USA
Discussed Mr Fucik's soil sampling activities at the Occidental Oil facilities in the Amazon lowlands

Action selected Envirolab Peru as technical partner

Monday, 5/27/96

Meetings @ Pontificia Universidad Catolica del Peru (PUCP)
Luis Jaime Castillo Butters (Research Director)
Richard Korswagen Edery (Chemistry)
Oscar Enrique Frias Martinelli (Mining Engrg)
Antonio Samanaga (Visiting Dr Frias from SVS Ingenieros)
Manuel Olcese Franzero (Engrg Dean)
Jorge V Zegarra Pellane (Civil Engineering)

Toured University facilities
Discussed co-operative research

Discussed faculty development at USA graduate schools
Discussed mining and enviromental issues

Conclusion anticipate Dr Frias joining PGB team

Meeting @ CEPIS (PanAmerican Center for Sanitary Engrg & Science)
Sergio Caporali (General Director)
Alvaro Luis Cantanhode (Director of Solid Waste)

Discussed rural and urban enviromental problems, especially sanitary
Discussed access to libraries and laboratories

Tuesday, 5/28/96

Meeting #2 @ USAID/Peru
Alan Davis, USAID/Peru

Discussion on goals and procedures, review of contacts

Conclusion agreed to base at USAID/ORD, meet with Mr Davis every two days Such meetings not logged hereafter

Meeting #1 @ Minas Buenaventura Ingenieros, S A
Eduardo Rubio Davila
Jamie Sanchez Saavedra

Described Julcani & Uchucchacua mines
Described acid drainage and other discharges, local environmental impacts
Described limited volume availability for tailings disposal

Conclusion Expanded knowledge about Peruvian mining, industry very concerned about environmental impact, public relations, Sr Rubio & Sr Sanchez enthusiastic about PGB, invited to further discussion of a field visit

Meeting with Collegio Ingineros Metalurgical Division (lunch mtg)
Carlos Villachica Leon (Principal in Consulcont S A)

Planned Thursday and Friday presentations at Collegio
Discussed Andean and Amazon mining and enviromental problems

Meeting @ residence/office
Maria Chapuis, Consultant

Research on types and area distribution of mines
Discussed further contacts

15

Wednesday, 5/29/96

Meeting @ Ministry of Energy Mines, Environmental Section
Jose Mogrovejo Castillo, Environmental Director

Describe role of Ministry
Discussed PAMA's (environmental reports to be submitted by each mine)

Conclusion Ministry is willing to share information and make introductions, supports co-operative environmental protection

Meeting @ SPDA (Private environmental association)
Manuel Pulgar Vidal, SPDA Director
Antonio Bernales (Consorcio)\

Described role of environmental groups in the mining sector
Discussed a wide range of urban and natural resource environmental issues

Meeting #2 with Minas Buenaventura
Raul Benavides Ganoza, CEO
Carlos Rodrigues Vigo, Envir Auditor
Eduardo Rubio Davila
Jamie Sanchez Saavedra

Described PGB use @ Julcani and Uchucchacua in more detail
Action Buenaventura committed to Julcani & Uchucchacua mine tour

Meeting # 2 with Collegio Inigineros @ USAID
Carlos Villachica Leon

Further preparation for presentations

Thursday, 5/30/96

Meeting with Carlos Arranda, Southern Peru Copper
Canceled @ SPC office site due to emergency

Meeting #1 Corporacion Minera Nor Peru , @ Lima Office
Mario del Rio, Corporacion Minera Nor Peru
Andres Dasso, Pan American Silver Peru

Described gold mine @ Quiruvilca (near Trujillo), recently purchased from PanAmerican (ASARCO)
Described tailings stability problem and acid mine drainage to coastal river
Discussed local material availability sugarcane ash, copper cement kiln dust

16

Conclusion invited PGB team to a site visit

Meeting with Horizonte Mine, S A @ Lima office
Jaime Uranga (Horizonte)
Oscar Frias (PUCP), consultant

Described gold mine in Eastern range with acid drainage problems
Discussed potential for lateritic soils locally near the mine in Eastern Andes
Discussed a transect of soil sampling from mine to Amazon Valley

Conclusion invited PGB team to a site visit

Juevas Mineras (weekly program) @ Institute de Ingenieros de Minas (IIM) Co-ordinate 6/14 PGB presentation with Luis Bazo (IIM director)
Mine tour confirmation with Raul Benavides
Invited to Cerro de Pasco by Jorge Merino, CEO Centromin
Invited to El Brocal visit by Juan Proano, CEO El Brocal
Invited to University of Lima visit by Venancio Astucuri, Dean
Invited to August 26 Mining Congress, Maximo Romero, IIM
Discussion, tailing disposal, James Shepherd, Consultant
Discussion, Oroya smelter, Antonio Carnejo, Centromin
Many casual discussions

Friday, 5/31/96

Meeting #2 @ PUCP
Nicole Bernex de Falen, Director Instituto de Estudios Ambientales (IDEA)

Discussed environmental issues in Amazon Valley
Discussed oil spills, impacts of fiber extraction
Discussed use of soil as water filter
Discussed ongoing soils mapping

Conclusion anticipate Dr Bernex on PGB team, excellent source of data

Meeting with Sociedad Nacional de Minera y Petroleo
Walter Sologuren (President)
Maria Arias (Environmental manager)

Discussed background on Peruvian mining boom

Meeting @ El Doral Hotel wi/ Ricardo Giesecke, City Council (Sanitary)

Discussed appropriate urban solid waste solutions
Discussed appropriate landfill configuration in a coastal desert setting

17

Discussed economic incentives to collect & recycle solid waste
Discussed wastewater and air pollution issues

Saturday, 6/1/96 to **Tuesday, 6/4/96**

Mine tour of Julcani (Huancavelica Department) and Uchucchacua (Lima Department) under Buenaventura sponsorship Refer to mine tour report (Appendix B) for personnel, itinerary, observations

Wednesday, 6/5/96

Meeting #3 @ Minas Buenaventura
Carlos Rodriguez
Luis de la Cruz Rengifo (Chief metals prospector)

Obtained Julcani and Uchucchacua environmental reports

Thursday, 6/6/96 & **Friday, 6/7/96**

Presentation #1 Short Course @ Instituto de Ingenerios de Minas del Peru
Presentations by Dr Grubb and Dr Martin
Lecture topics shown on attached announcement

Dr Martin departs for USA

Monday, 6/11/96
Meeting #4 @ Minas Buenaventura
Alan Davis, USAID/ORD
Raul Buenavides, Buenaventura
Walter F Silva, Buenaventura
Carlos Rodriguez, Buenaventura

Detailed discussion of Phase II study, including demonstration at the Julcani and Ucchuchacua Mines mines and research in the USA

Buenaventura eager to get the project moving, interested in signing a letter of intent to conduct the research to expedite and provide matching collateral to USAID/ORD to support its internal funding requests

Dr Grubb suggested an Aug 15, 1996 start , agreed to provide a draft of the proposal on Thursday morning (6/13), official proposal from the respective universities could be furnished within ten days to two weeks

Meeting #2 Corporacion Minera Nor Peru @ Lima Office
Mario del Rio, Corporacion Minera Nor Peru
Andres Dasso, Pan American Silver Peru

Discussed visit to Quiruvilca mine, coordinated with Jose Pacora, Supt

18

Discussed metals (gold, silver, antimony, lead and iron) and acid mine drainage
Discussed avaiability of kiln dust from Pascomayo cement factories, material from onsite anthracite-fired copper cement/sulfide plant
During meeting, it was learned that the US Embassy would not grant clearance to PGB to visit Trujillo and Quiruvilca areas

Meeting @ Occidental Peruana
Arturo Elejalde, Occidental Peruana (referral by Carlos Villachica)

Discussed oil exploration in Northern Peru, site of Ken Fucik's soil sample Discussed oil spill treatments, geotechnical problems with wet lateritic soils

Meeting @ SVS Ingenieros Offices
Dr Oscar Frias, PUCP
Carlos Soldi, CONAM / SVS Ingenieros, S A

Discussed CONAM philosophy and operation, it is not an enforcement agency but an arbiter, advocate and facilitator to assist with technical expertise any other governmental agency that already has authoritative jurisdiction

Discussed the Lake Junin project
El Brocal inherited a smelter operated 1906-1982
It used high sulfur (6%) and high ash (35-40%) Pennsylvania coal
Coal ash/slag pile runoff is pH 3 to 3 5, mine drainage is PH =5
Runoff affects surface water at El Brocal and Lake Junin
Ash/kiln dust from cement plant may be used to attuenate the acidic pH

Tuesday, 6/11/96

Meeting #3 @ PUCP
Dr Nicole Bernex, IDEA/ PUCP
Dr Guzman Barron, Chancellor, PUCP

Discussed inter-university cooperation and exchange
Interest in faculty for the Instituto de Estudios Ambientales (IDEA)
Research includes assessment, quantifying ecological damage by GIS
Remediation of oil contamination in the Amazon and mine leachate mitigation

Meeting #4 @ PUCP
Dr Oscar Frias, PUCP

Discussion of sampling protocol for lateritic soils for Consorcio Horizonte
Discussion of prospective students, potential application of Dr

Grubb for a Fullbright scholarship to do research @ PUCP

Meeting #5 with PUCP @ El Doral Hotel
Ms Katia Guanira, PUCP student of Dr Frias, employee of SVS
Discussed potential for study at Georgia Tech

Thursday, 6/13/96

Meeting #5 @ Minas Buenaventura
Alan Davis, USAID/Peru
Raul Buenavides, Buenaventura
Walter F Silva, Buenaventura
Mario Santillan, Buenaventura
Carlos Rodriguez, Buenaventura

Discussion of PGB proposal for pilot-scale projects at Julcani and Uchucchacua Presented budget shared by USAID and Buenaventura
Latter's direct cost about $200,000/yr for three years
Mr Benavides thought budget too high, suggested eliminaton of Julcani mine

Later meeting with Mr Rodriguez, budget trimmed to approximately $80,000 for Uchucchacua site only, re-submitted to Buenaventura

Meeting #2, @ Southern Peru Copper
Mr Carlos Aranda, Southern Peru

Discussed PGB May be useful to SP in configuration as an infiltration gallery SP generates 100,000 tpd of copper & molybdenum tailings @ 55% solids Discussed Southern Peru 's current use of wetlands for acid mine drainage

Presentation # 2 Jueves Mineras @ Institute de Ingenieros de Minas

Met with several consulting engineers and mining operators
Treatment of cyanides is the major issue after acid mine drainage
Jim Shepard of Shepard Mining Services indicated that Knight-Peisold may be interested in incorporating PGB in upcoming projects

Raul Benavides still thought the PGB proposal too high, not acceptable

Met with Jose Pacora, Northern Peru Quiruvilca, Superintendent

Friday, 6/14/96
Dr Grubb returns to USA

Appendix B

Mine Tour Report for May-June 1996 Visit

USAID/Peru Porous Geochemical Barriers Project

Drexel University - Georgia Institute of Technology

OUTLINE

- Purpose of Mine Tour
- Mines Visited
- Personnel
- Itinerary
- Production and Settings of the Mines
- Julcani Mine
  - Overview
  - Acid Drainage
  - Tailings Acidification
  - Future Plans and Mitigating Measures Underway
- Uchucchacua Mine
  - Overview
  - Water Sampling
  - Future plans

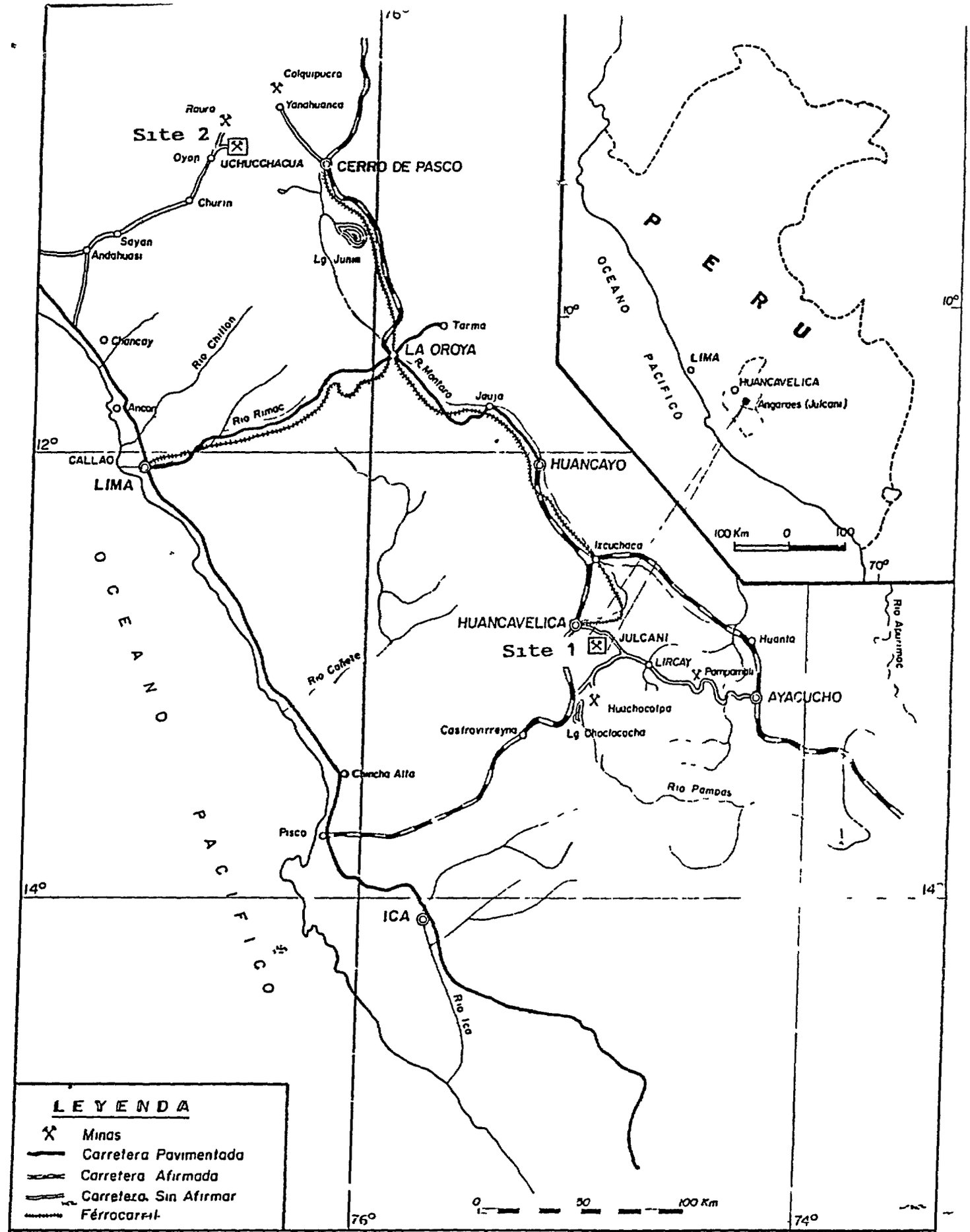

DIBUJO	PPC	ESCALA	COMPANIA DE MINAS BUENAVENTURA S A - JULCANI Departamento de Geologia	
REVISADO		1 2'500,000		
		FECHA	PLANO DE UBICACION	Fig. 1
OBSERVACIONES -		Enero 1996		

22

Purpose of Mine Tour

The purpose of the mine and mining district tour was to acquaint the Porous Geochemical Barrier (PGB) team with Peruvian ore mining and milling practice, Andean terrain and hydrologic setting, and environmental impacts from mining This information and understanding would then be used to assess the feasibility of using the PGB technology to attenuate environmental contamination resulting from mining activities

Mines Visited

Julcani Mine, Huancavelica Department, Luis Jelasco, Supt
Uchucchacua Mine, Lima Department, Segundo Bejarano, Supt

Both are owned by Compania de Minas Buenaventura S A , which provided all air/ground transportation, meals and accommodations

Personnel

The tour was led by Carlos Rodriguez, Auditor Ambiental for Buenaventura, and two colleagues Luis del Carpio (Engineering Superintendent) and Trodimiro Salvatiessa, (Metallurgist) Dr Dennis G Grubb (Georgia Institute of Technology) and Dr Joseph P Martin (Drexel University) were the PGB team Also traveling with the group was Alberto Lobo-Guerrero of Lobo-Guerrero Geologia LTDA He was also a guest of Buenaventura who was surveying Peruvian mining techniques to improve precious metal mining in Colombia

Itinerary

Please refer to attached Figure 1

Saturday, June 1
- Depart Lima for Julcani, chartered ATSA flight, 10 30 AM
- Arrive Julcani, tour facility and conduct water & soil sampling, Noon-6 30 PM
- Overnight Lircay, Buenaventura guest house

Sunday, June 2
- Depart Lircay for Julcani, 7 30 AM
- Arrive Julcani, complete tour and sampling activities
- Depart Julcani for Acchilla, Noon
- Arrive Acchilla, new tailings site for Julcani,10PM
- Depart Acchilla for Huancayo via Huancavelica, 10 30 PM
- Arrive Huancayo, take lunch, visit town, 12 30-3 00 PM
- Depart Huancavelica for Huancayo, 3 00 PM
- Arrive Huancayo, 7 00 PM
- Overnight Huancayo, El Presidente Hotel

Monday, June 3
- Depart Huancayo for Uchucchacua via La Oroya and Cerro de Pasco, 6 30 AM
- Arrive La Oraya, observe smelter, take breakfast, 9AM
- Observe Lake Junin & Mantaro River headwaters en route
- Arrive Uchuccchacua, tour mill and conduct water sampling, 2 30-6 00 PM
- Leave Uchucchacua @ 6 00 PM
- Overnight @ Santa Rosa Hotel, Churin

Tuesday June 4
- Return to Lima via Sayan and Andahuasi, arrive @ noon

Production and Settings of the Mines

Both Julcani and Uchucchacua are silver mines with underground workings and onsite mills that produce concentrates for smelting and refining elsewhere Julcani has been mined to some extent for decades It processes about 650 metric tons of ore per day, producing about 26,000 kg of silver annually It also produces about 500 metric tons each of copper and lead Uchucchacua is a newer mine, opened in 1975 and processes about 200 tons per day, but increased production is planned The mine produces about 106,000 kg of silver, 3800 metric tons of zinc, and 2400 metric tons of lead annually

Julcani is about 500 kM Southeast of Lima, and about 45 kM Southeast of Huancavelica in the District of Cochaccassa, Province of Angaraes, Department of Huancavelica The mill and other surface facilities are at 4200 meters elevation, near the head of a valley (Quebrada Palcas) that drains to the Rio Opamayo, 600 meters lower and about 2 kM distant The Opamayo flows past the town of Lircay, and ultimately to the Mantaro and the Amazon Underground workings extend under several converging ridges such that there are surface access and drainage drifts in other watersheds, including the Rio Acchilla, which flows into the Opamayo below Lircay

The area is lightly populated and agricultural, with subsistence crops and stock grazing The climate is typical of the high grassland (Puna) with an annual rainfall of about 700mm (30ó) This is concentrated in a wet season that tends to occur between October and April The annual maximum temperature is about 13° C, and the minimum is -2°C The local geology is dominated by metamorphic and sedimentary rock, but there is evidence of volcanic activity The mineralized zone is about 5kM long by 3kM wide, with several active and inactive mines The portion of the Julcani complex to the Northwest is called the Mimosa mine, while the

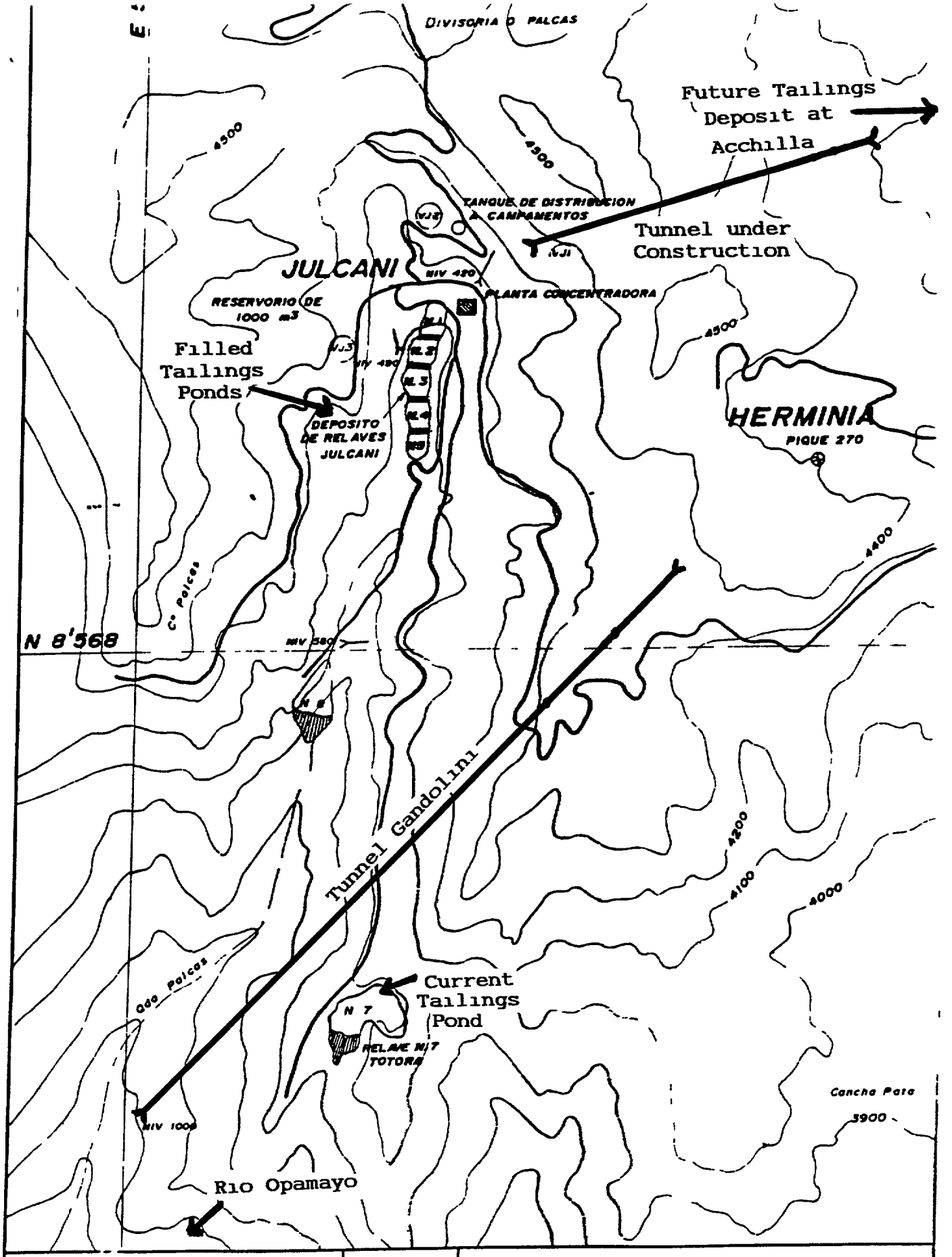

FUENTES DE EMISION PLANTA CONCENTRADORA -CHANCADORAS -SECCION DE CONCENTRACION -LABORATORIO LEYENDA PUNTO DE MONITOREO	ESCALA 1/25000 FECHA ENERO - 95	COMPANIA DE MINAS BUENAVENTURA S A - UNIDAD JULCANI DEPARTAMENTO DE SEGURIDAD **UBICACION DE ESTACION DE MONITOREO Y FUENTES DE EMISION DE GASES Y POLVO** Fig 2

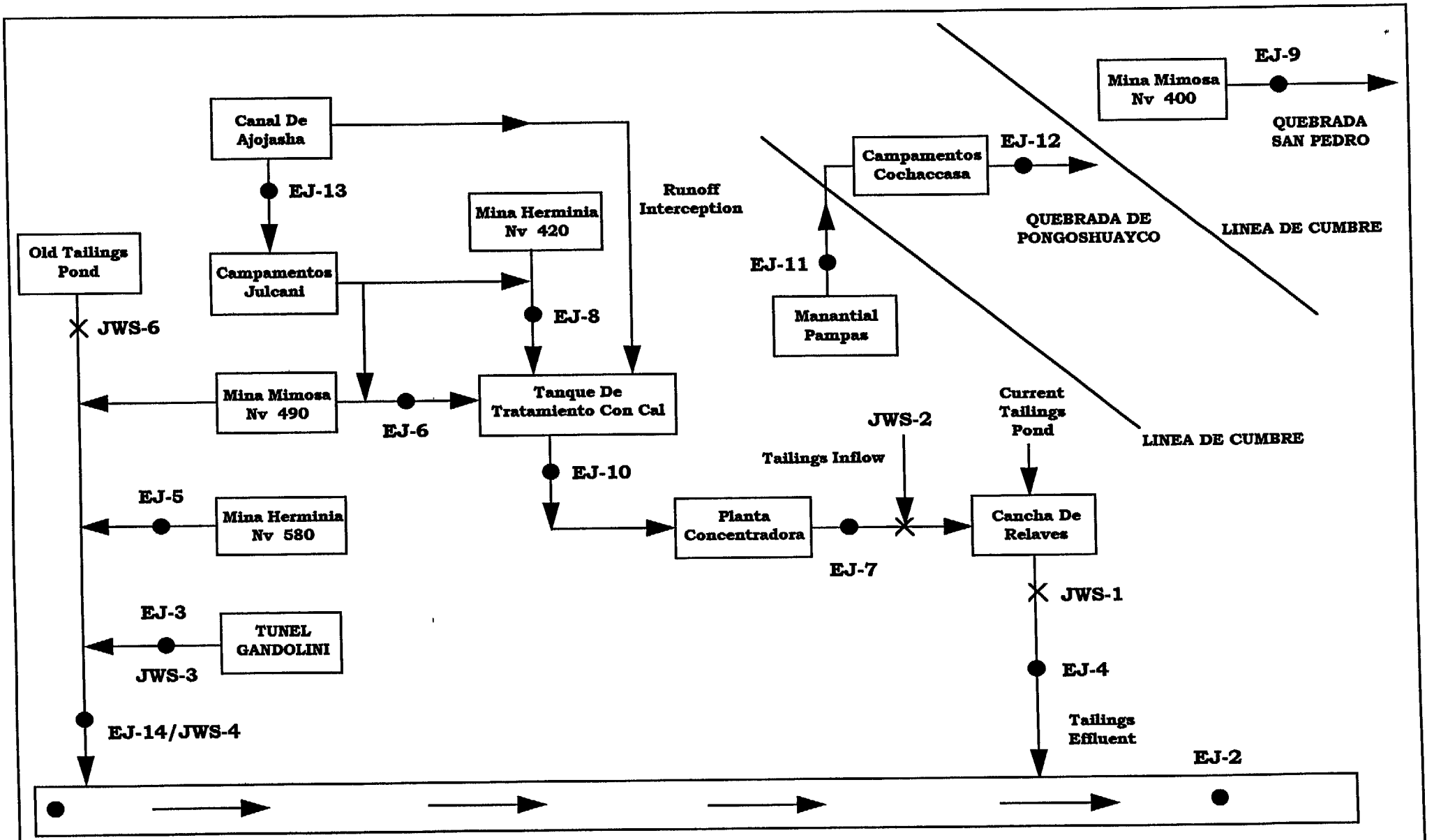

ADAPTED FROM CIA DE MINAS BUENAVENTURA S A.

EFLUENTES Y ESTACIONES DE MONITOREO - UNIDAD JULCANI	JULY 1995
	FIGURE 3

MONITOREO DE LA CALIDAD DE AGUA

NOMBRE DE LA COMPANIA: CIA. DE MINAS BUENAVENTURA S A.
UNIDAD MINERA: JULCANI
ESTACION: EJ 3
UBICACION: Nivel 1000 Boca mina tunel Gandolini

ANALISIS QUIMICO

	LAB	FECHA	CAUDAL (lt/seg)	TEMP. (C)	pH	CONDUCT (umhs/cm)	OXIG DIS (mg/lt)	TDS (mg/lt)	TSS (mg/lt)	SULFATOS (mg/lt)	NO3 (mg/lt)	Pb (mg/lt)	Zn (mg/lt)	Fe (mg/lt)	Mn (mg/lt)	Cu (mg/lt)	Cd (mg/lt)	As (mg/lt)	Cr (mg/lt)	Sb (mg/lt)	Dureza (mg/lt)	Acidez (mg/lt)
			PARAMETROS																			
	MINA	07-02 94	25 00		2.8							0 00	44 00	650 00		33 00	0.00			10 00		
	MINA	26-04 94	26 00		1.9							1 00	74 50	1014 50	320 00	63 40	0.40			14 00		
( )	SGS	29-04 94	29 00	10 0	5.3			11784		5884 00	135 60	0 14	85 60	1224 00	294 70	66 60	0.46	11 37				4904 00
	MINA	13-05 94	28 00	17 0	2.7							0 00	66 50	992 50	315 00	68 70	1 00	9.23		20 00		
(*)	SGS	30-05-94	21 00	11 0	4 1			10636	147	5055 00		0 52	77 20	1120 00	286 00	60 40		6 75	0 07			4495 00
	MINA	09-06-94	18 00	13 0	3.0							0 00	65 00	1102 50	313 00	63 30	3.27					
	MINA	07-07 94	12 00	15 0	2.5							0 35	57 50	1007 50	326 00	58 40	1.80			7 00		
	MINA	16-07 94	12 00	14 0	2.9							0 20	70 00	855 50	305 00	51 60	1.00			17 00		
	MINA	13-08-94	12 00	13 0	2.8							0 10	73 50	847 50	315 00	46 40	7.00			2.00		
	MINA	20-08-94	10 00	15 0	3.0		5.9	8206		5106 00		0 15	66 50	872 00	320 00	45 40	3.00			9 00		
	MINA	09-09-94	10 00	15 1	2 4	>2000	5 9	8216	57	5206 00	0 86	0 52	75 50	752 50	346 30	49 75	0.52					3593 00
	MINA	24-09-94	10 00	15 0	2.7							0 10	71 50	876 00	352 50	46 60						
	MINA	01 10-94	9 00	16 0	3.5							0 00	66 50	814 00	360 50	44 90						
	MINA	15-10-94	10 00	16 0	2 4							0 50	84 50	768 00	403 50	50 00						
	MINA	19-10-94	8 00	16 8	2 8	>2000	5.5	7943	391	4767 00		1 64	71 40	748 00	370 20	46 94						
	MINA	30-10-94	12 00	15 0	2.4							0 51	72 00	683 00	349 00	45 60						
	MINA	14 11 94	12 00	16 0	2 4							1 00	81 50	754 00	393 50	49 00						
	MINA	23-11 94	8 00	17 6	2.3	>2000	3 0	7676	333	4627 00	0.00	0 40	76 50	600 00	368 00	50 50	0.53				1059 00	3944 00
	MINA	12 12 94	9 00		2.2							0 31	78 50	782 00	415 50	49 90	2.55					
	MINA	07-01 95	9 50	17 0	2 3							0 28	59 50	594 50	316 00	362 00	1.69					
	MINA	13-01 95	10 00	16 5	2.5	>2000		7037	412	4615 00		0 56	76 00	760 00	417 00	58 90	0.50					
	MINA	03-02 95	10 00	16 0	2.6							0 44	75 00	1039 00	405 00	76 00	2.28					
	MINA	10-02 95	12 00	17 6	2 4	>2000		13453	54	11607 00		0 46	93 60	1844 00	471 00	168 00	0.71					
	MINA	25-02 95	13 00	17 0	2.5							0 53	80 00	2065 00	496 00	135 00	0.84					
	MINA	04-03 95	20 00	16 0	2 4							0 00	82 00	2506 00	496 00	170 00	0.75					

(*) Analisis de control en laboratorios externos.

BALANCE MASICO

FECHA	CAUDAL (lt/seg)	TDS (Kg/dia)	TSS (Kg/dia)	SULFATO (Kg/dia)	NO3 (Kg/dia)	Pb (Kg/dia)	Zn (Kg/dia)	Fe (Kg/dia)	Mn (Kg/dia)	Cu (Kg/dia)	Cd (Kg/dia)	As (Kg/dia)	Cr (Kg/dia)	Sb (Kg/dia)
	PARAMETROS													
07-02-94	25 00					0 00	95 04	1404 00	0 00	71 28	0 00			21 60
26-04-94	26 00					2 25	167 36	2278 07	718 85	187 35	0 90			
29-04-94	29 00	29525 99		14742 95	339 76	0 35	214 48	3066 05	736 40	166 87	1 20	26.49		
13-05-94	28 00					0 00	160 88	2401 06	762 05	166 20	2 42	22.33		48 38
30-05-94	21 00	19297 96	266 72	9171 79		0 94	140 07	2032 3	518 92	109 59		15 88	0 13	
09-06-94	18 00					0 00	101 09	1714 61	486 78	98 44	5 09			
07-07 94	12 00					0 36	59 62	1044 6	340 07	60 55	1 87			7 26
16-07 94	12 00					0 21	72 58	886 98	316 22	53 71	1 04			17 63
13-08-94	12 00					0 10	76 20	878 69	326 59	48 11	7 28			2 07
20-08-94	10 00	7069 98		4411 58		0 13	57 46	753 41	276 46	39 23	2 59			7 78
09-09-94	10 00	7098 62	49 25	4497 98	0 76	0 45	65 23	650 16	299 20	42 98	0 45			
24-09-94	10 00					0 09	61 78	758 9	304 56	42 16				
01 10-94	9 00					0 00	53 27	632 97	295 88	34 91				
15-10-94	10 00					0 43	73 01	663 35	348 62	43 20				
19-10-94	8 00	5490.20	270 26	3294 95		1 13	49 35	517 02	255 88	32 44				
30-10-94	12 00					0 53	74 65	706 13	361 64	47 28				
14 11 94	12 00					1 04	84 50	781 75	407 98	0 80				
23 11 94	8 00	5305 65	230 17	3198 18	0 00	0 28	52 88	552 98	254 36	34 91	0 37			
12 12 94	9 00					0 24	61 04	606 08	323 09	38 80	1 98			
07-01 95	9 50					0 23	48 84	487 07	259 37	297 13	1 39			
13-01 95	10 00	6079 97	355 97	3987 36		0 48	65 66	673 92	360 29	0 89	0 43			
03-02 95	10 00					0 38	64 80	897 70	349 92	67 39	1 97			
10-02 95	12 00					0 48	97 04	1911 66	488 33	174 18	0 74			
25-02 95	13 00					0 60	89 66	2319 41	557 11	151 63	0 72			
04-03 95	20 00					0 00	141 70	4333 22	857 09	293 76	1 30			

FIGURE 4a

MONITOREO DE LA CALIDAD DE AGUA

NOMBRE DE LA COMPANIA: CIA DE MINAS BUENAVENTURA S A
UNIDAD MINERA: JULCANI
ESTACION: EJ - 14
UBICACION: Quebrada Palcas

ANALISIS QUIMICO

LAB	FECHA	CAUDAL (lt/seg)	TEMP (C)	pH	CONDUCT (umhs/cm)	TDS (mg/lt)	TSS (mg/lt)	SULFATOS (mg/lt)	NO3 (mg/lt)	Pb (mg/lt)	Zn (mg/lt)	Fe (mg/lt)	Mn (mg/lt)	Cu (mg/lt)	Cd (mg/lt)	Alcalin (mg/lt)
		PARAMETROS														
GS	16 05 94	100 00				96		11 00	3 71	0 06	0 19	1 67	0 25	0 08	<0 005	19
UC	19 12 94	150 00				3412		1920 00		0 93	30 00	400 00	120 00	14 00	0 17	
INA	07 01 95	200 00	12 0	9 6						0 15	0 06	0 77	0 22	0 02	0 00	
INA	13 01 95	200 00	12 5	6 2	34	19	3	30 00		0 13	0 09	0 32	0 88	<0 02	0 01	
INA	03 02 95	200 00	12.0	2 9						0 56	6 29	277 00	94 00	20 18	1 00	
INA	10 02 95	100.00	10 7	2 9	1802	2725	71	2089 00		0 28	36 30	480 00	121 00	28 80	0 26	
INA	25 02 95	300 00	12 0	2 9						0 48	13 00	195 00	61 90	10 83	0 13	
INA	04 03-95	300 00	9 0	2 8						0 00	22 00	280 00	20 40	20 50	0 21	

(*) Analisis de control en laboratorio externo

BALANCE MASICO

FECHA	CAUDAL (lt/seg)	TDS (Kg/dia)	TSS (Kg/dia)	SULFATOS (Kg/dia)	NO3 (Kg/dia)	Pb (Kg/dia)	Zn (Kg/dia)	Fe (Kg/dia)	Mn (Kg/dia)	Cu (Kg/dia)	Cd (Kg/dia)
	PARAMETROS										
16 05 94	100 00	829 44		95 04	32 05	0 52	1 64	14 43	2 16	0 69	<0 04
19 12 94	150 00	44219 52		24883 20		12 05	388 80	5184 00	1555 20	181 44	2 22
07 01-95	200 00					2 59	1 04	13 31	3 80	0 35	0 00
13 01 95	200 00	328 32	51 84	518 40		2 25	1 56	5 53	11 75	<0 35	0 17
03 02 95	200 00					9 68	108 69	4786 56	1624 32	348 71	17 28
10 02 95	100 00	23544 00	613 44	18048 96		2 42	313 63	4147 20	1045 44	248 83	2 25
25 02 95	300 00					12 44	336 96	5054 40	1604 45	280 71	3 37
04 03 95	300 00					0 00	570 24	7257 60	528 77	531 36	5 44

FIGURE 4b

28

MONITOREO DE LA CALIDAD DE AGUA

NOMBRE DE LA COMPANIA: CIA. DE MINAS BUENAVENTURA S.A.
UNIDAD MINERA: JULCANI
ESTACION: EJ 4
UBICACION: Agua decantada de cancha de relaves.

ANALISIS QUIMICO

			PARAMETROS																				
LAB	FECHA	CAUDAL (lt/seg)	TEMP (C)	pH	CONDUCT (umhs/cm)	OXIG DIS (mg/lt)	TDS (mg/lt)	TSS (mg/lt)	SULFATOS (mg/lt)	NO3 (mg/lt)	Pb (mg/lt)	Zn (mg/lt)	Fe (mg/lt)	Mn (mg/lt)	Cu (mg/lt)	Cd (mg/lt)	As (mg/lt)	Cr (mg/lt)	Sb (mg/lt)	Alcalin (mg/lt)	Dureza (mg/lt)	Acidez (mg/lt)
MINA	07-02 94	2.70		4 7							1 00	3 50	38 00		0 60	0 00			2.00			
MINA	20-04 94	8 00		5 6							2 00	0 40	3 00	7 20	0 40	0 10			5 00			
(*) SGS	29-04 94	7 00	5 0	5 7			426		195 00		0 06	0 22	2 56	2 54	0 17	<0 005	0 036			5 30		
MINA	04-05-94	4 00		5 5							0 00	0 20	5 00	5 00	0 00	0.00	9 235					
MINA	13-05 94	2 70	12 0	3 4							0 00	0 50	9 00	4 00	0 20	1 00	7 390		30 00			
(*) SGS	30-05 94	7 00	5 0	5 8			1654	32	1046 00		0 04	5 92	176 50	51 40	0 21		0 093	<0 05				350 00
MINA	09-06-94	5 00	5 0	4 4							0 00	0 00	3 00	2 40	0 15	0 10						
MINA	15-06-94	7 00	5 0	5 2							0 00	0 20	2 38	11 60	0 70	0 03						
MINA	27-06-94	7 00	15 0	7 2							0 10	0 40	1 60	9 10	0 60	0 03						
MINA	07-07 94	7 00	3 0	6 1							0 00	0 30	2 60	15 60	1 20	3 20			6 00			
MINA	10-07 94	5 00	5 0	5 5							0 00	0 60	2 00	18 00	1 10	1 00			21 00			
MINA	16-07 94	6 00	4 0	6 1							0 00	0 60	2 90	8 00	0 10	0 00			11 00			
MINA	13-08-94	6 00	6 0	6 5							0 00	0 30	2 60	10 00	0 50	5 00			0.00			
MINA	20-08-94	6 00	7 0	6.3							0 00	1 00	2 60	10 00	0 60	1 00			3.00			
MINA	29-08-94	5 00	9 0	6 9		5 2	2603		1706 00		0 00	0 30	1 40	5 00	0 20	1 00			2 00			
MINA	09-09-94	9 00	10 5	7 1	1746	5 2	2636	14	1716 00	0 66	0 07	0 09	0 10	2 63	0 33	0 02				16 00	1782.00	
MINA	10-09-94	10 00	10 0	6 4							0 00	0 10	0 45	0 40	0 05							
MINA	17-09-94	9 00	9 0	6 8							0 00	0 15	0 50	0 35	0 10							
MINA	24-09-94	7 00	10 0	6 0							0 00	0 40	2 70	4 20	0 10							
MINA	01 10-94	8 00	8 0	6 0							0 00	0 60	2 70	8 50	0 40							
MINA	07 10-94	8 00	9 0	6 9							0 00	0 10	0 45	0 40	0 05							
MINA	15 10-94	9 00	9 0	6 5							0 13	0 07	0 01	1 13	0 13							
MINA	19-10-94	9 00	15 4	4 9	>2000	4 5	5371	65	3364 00	11 00	0 12	0 08	0 22	2 67	0 40	0 12					1340 00	1628 00
MINA	22 10-94	8 00	9 0	6 5							0 24	0 02	0 00	6 88	0 25							
MINA	30-10-94	7 00	8 0	4 0							0 40	0 40	0 10	8 50	0 33							
MINA	07 11 94	10 00	10 0	6 5							0 13	0 06	0 00	1 05	0 11							
MINA	14 11 94	12 00	11 0	6 5							0 18	0 05	0 00	1 01	0 10							
MINA	19-11 94	9 00	15 4	4 9	2000	4 5	5371	65	3364 00		0 26	0 40	2 70	2 00	0 40							
MINA	21 11 94	12 00	11 0	6 4							0 07	0 07	0 19	2 00	0 02							
MINA	23 11 94	15 00	21 3	7 1	1576	3 0	1746	26	1125 00	3 00	0 16	0 06	0 34	2 70	0 46	0 02				21 00	1119 00	
MINA	12 12 94	15 00	12 0	5 8							0 11	0 34	0 18	4 27	0 00	0 01						
MINA	07-01 95	10 00	14 0	3.3							0 70	14 00	436 50	172 40	0 37	0 00						
MINA	13-01 95	15 00	13 0	4 6	956		731	39	415 00		0 23	1 66	41 40	23 60	<0 02	0 01						
MINA	03-02 95	11 00	8 0	4 8							0 09	6 50	239 25	99 00	0 09	0 10						
MINA	10-02 95	10 00	12 2	3 9	1445		2399	102	1478 00		1 29	11 60	345 00	131 00	0 47	0 05						
MINA	25-02 95	10 00	10 0	3 1							0 30	10 50	357 50	13 70	0 67	0.04						
MINA	04-03 95	10 00	10 0	3 2							0 00	9 50	400 50	142 00	0 58	0 04						

( ) Analisis de control en laboratorios externos

FIGURE 4c

MONITOREO DE LA CALIDAD DE AGUA

NOMBRE DE LA COMPANIA: CIA. DE MINAS BUENAVENTURA S.A.
UNIDAD MINERA: JULCANI
ESTACION: EJ (1)
UBICACION: Rio Opamayo, aguas arriba zona de operacion

ANALISIS QUIMICO

LAB	FECHA	CAUDAL (lt/seg)	TEMP (C)	pH	CONDUCT (umhs/cm)	OXIG DIS (mg/lt)	TDS (mg/lt)	TSS (mg/lt)	SULFATOS (mg/lt)	NO3 (mg/lt)	Pb (mg/lt)	Zn (mg/lt)	Fe (mg/lt)	Mn (mg/lt)	Cu (mg/lt)	Cd (mg/lt)	As (mg/lt)	Cr (mg/lt)	Sb (mg/lt)	Alcalin (mg/lt)	Dureza (mg/lt)
		PARAMETROS																			
MINA	14-02 94	4600 0		7 9							2 00	1 20	5 10	1 00	0 30	0 00			0 00		
MINA	26-04-94	4100 0		5.5							0 00	0 90	1 00	0 00	1 00	0.00			0 00		
(*) SGS	29-04 94	4000 0	5 0	7 3			436		46 00		0 01	1 51	1 67	2 33	0 64	0 01	0 02			81 00	
MINA	13-05 94	3700 0	7 0	5.2							0.00	0.70	1 90	0 00	0 00	0 00	3 67		12 00		
(*) SGS	30-05 94	3500 0	5 0	7.3			500	30	107 00		0 01	0 48	0 20	0 46	0 03		0 03	<0.05		197 00	
MINA	09-06-94	3000 0	5 0	7 0							0 00	0 70	2 10	0 90	0 00	0 00					
MINA	07-07 94	1000 0	6 0	7 0							0 00	0 70	0 00	0 50	0 40	2 60			4 00		
MINA	16-07 94	1000 0	6 0	6.2							0 00	1 00	1 60	1 00	0 00	0 00			3 00		
MINA	13-08-94	1000 0	4 0	8.0		5 5					0 00	0 70	3 00	1 00	0 00	2 00			0 00		
MINA	20-08-94	600 0	6 0	6.3		5 8	713		183 00		0 00	0 90	0 60	1 00	0 20	1 00			4 00		
MINA	09-09 94	1000 0	10 1	8.5	959	5 6	613	26	183 00	0 88	0 00	0 33	0 00	0 68	0 01	0 01				208 00	370 00
MINA	01 10-94	2000 0	7 0	7 7							0 00	0 50	1 30	1 00	0 10						
MINA	19-10-94	3000 0	10 3	8.3	494	6 6	365	149	126 00	9 00	0 00	0 13	0 05	0 59	0 00	0 01				133 00	245 00
MINA	30-10-94	5000 0	9 0	8.5							0 00	0 08	0 00	0 61	0 00						
MINA	23 11 94	3000 0	12 2	8.9	780	8 0	539	171	162 00	1 00	0 00	0 24	0 00	0 61	0 01	0 01				184 00	322 00
( ) PUCP	12 12 94	4000 0							198 00			1 67		1 05							
MINA	12 12 94	4000 0		8 1							0 0	0 00	0 00	0 66	0 00	0 03					
MINA	07-01 95	7000 0	12 0	6.6							0 0	0 32	1 21	0 87	0 00	0 00					
MINA	13-01 95	7000 0	9 8	7 9	360		211	63	84 00		0 0	0 25	0 05	0 45	0 02	0 01					
MINA	03-02 95	6000 0	9 0	7.4							0 0	0 11	0 00	0 07	0 00	0 00					
MINA	10-02 95	5000 0	10 7	8.5	394	7 7	354	23	70 00		0 0	0 31	0 05	0 27	0 02	<0 01					
MINA	04-03 95	21000 0	8 0	6.7							0 0	0 04	0 00	0 04	0 00	0 00					

(*) Analisis de control en laboratorios externos.

BALANCE MASICO

FECHA	CAUDAL (lt/seg)	TDS (Kg/dia)	TSS (Kg/dia)	SULFATOS (Kg/dia)	NO3 (Kg/dia)	Pb (Kg/dia)	Zn (Kg/dia)	Fe (Kg/dia)	Mn (Kg/dia)	Cu (Kg/dia)	Cd (Kg/dia)	As (Kg/dia)	Cr (Kg/dia)	Sb (Kg/dia)
	PARAMETROS													
14-02-94	4600 00					829 44	497 66	2115 07	414 72	124 42	0 00			0.00
26-04-94	4100 00					0 00	318 82	354 24	0 00	354 24	0 00			0.00
29-04-94	4000 00	150681 60		15897 60		72 58	521 86	577 15	605 25	221 18	3 46	6 22		
13-05-94	3700 00					0 00	223 [illegible]	607 39	0 00	0 00	0 00	1173 23		3636.16
30-05-94	3500 00	151200 00	9072.00	32356 80		63 50	145 15	60 46	139 10	9 07		7 86	<15 12	
09-06-94	3000 00					0 00	181 44	544 32	233 28	0 00	0 00			
07-07-94	1000 00					0 00	60 48	0 00	43 20	34 56	224 64			345.60
16-07-94	1000 00					0 00	86 40	155 52	86 40	0 00	0 00			259.20
13-08-94	1000 00					0 00	60 48	259 20	86 40	0 00	172 80			0.00
20-08-94	600,00	49282 56		12646 96		0 00	62 21	41 47	69 12	13 82	69 12			276.48
09-09-94	1000 00	70243 20	2246 40	15811 20	76 03	0 00	26 51	0 00	58 75	0 86	0 86			
01 10-94	2000 00					0 00	86 40	224 64	172 80	17 28				
19-10-94	3000 00	94608 00	38620.80	32659 20	2332 80	0 00	33 70	12 96	152 93	0 00	2 59			
30-10-94	5000 00					0 00	34 56	0 00	263 52	0 00				
23 11-94	3000 00	139708 80	44323.20	41990 40	259 20	0 00	62 21	0 00	158 11	2 59	2 59			
12 12-94	4000 00			66426 80			577 15		362 88					
12 12-94	4000 00					6 91	0 00	0 00	225 10	0 00	10 37			
07-01-95	7000 00					0 00	193 54	731 81	526 18	0 00	0 00			
13-01 95	7000 00	127612 80	50196 40	50603 20		24 19	151 20	30 24	272 16	12 10	4 23			
03-02 95	6000 00					0 00	57 02	0 00	36 29	0 00	0 00			
0 0_ 95	000 00	152936 00	2936	50240 00		17 [illegible]	133 02	21 60	116 64	8 64	<4 32			
							[illegible]	0 00	[illegible]	0 00	0 00			

FIGURE 4d

(1)

29

MONITOREO DE LA CALIDAD DE AGUA

NOMBRE DE LA COMPANIA : CIA. DE MINAS BUENAVENTURA S.A.
UNIDAD MINERA : JULCANI.
ESTACION : EJ 2
UBICACION : Rio Opamayo, luego de recibir efluentes de mina.

ANALISIS QUIMICO

PARAMETROS

	LAB.	FECHA	CAUDAL (lt/seg)	TEMP (C)	pH	CONDUCT (umhs/cm)	OXIG DIS (mg/lt)	TDS (mg/lt)	TSS (mg/lt)	SULFATOS (mg/lt)	NO3 (mg/lt)	Pb (mg/lt)	Zn (mg/lt)	Fe (mg/lt)	Mn (mg/lt)	Cu (mg/lt)	Cd (mg/lt)	CN (mg/lt)	As (mg/lt)	Cr (mg/lt)	Sb (mg/lt)	Alcalin. (mg/lt)	Dureza (mg/lt)
	MINA	14-02-94	5000.00		7.5							2.0	0.90	5.30	1.10	0.20	0.00				0.00		
	MINA	26-04-94	4500.00		6.9							0.0	2.20	1.24	5.00	0.90	0.00				8.00		
( )	SGS	29-04-94	4500.00	5.0	6.7			510		71.00	11.13	0.7	0.40	0.71	1.65	0.06	<0.005		0.014			68.00	
	MINA	13-05-94	4000.00	7.0	5.1							0.0	0.60	1.70	0.00	0.00	0.00		4.430		0.00		
(*)	SGS	30-05-94	3800.00	5.0	7.0			338	50	150.00		0.4	1.45	1.32	2.95	0.11			0.035	<0.05		125.00	
	MINA	09-06-94	3200.00	5.0	7.0							0.0	0.70	1.10	3.90	0.00	0.00						
	MINA	07-07-94	1100.00	5.0	6.6							0.0	0.80	0.00	2.70	0.10	2.30				6.00		
	MINA	16-07-94	1100.00	6.0	7.1							0.0	1.00	1.40	3.00	0.00	0.00				6.00		
	MINA	13-08-94	1100.00	5.0	7.6							0.0	0.40	1.50	4.00	0.00	1.00				0.00		
	MINA	20-08-94	880.00	8.0	7.5		6.2	685		245.00		0.0	1.00	0.80	4.00	0.00	0.00				6.00		
	MINA	09-09-94	1000.00	9.9	7.5	1035	6.5	690	67	250.00		0.0	0.46	0.31	4.56	0.01	0.01					170.00	415.00
	MINA	24-09-94	1500.00	9.0	7.5							0.0	0.40	0.00	5.50	0.00							
	MINA	01-10-94	2000.00	7.0	7.1							0.0	0.80	0.30	5.00	0.20							
	MINA	15-10-94	3000.00	8.0	7.6							0.0	0.19	0.00	2.17	0.00							
	MINA	19-10-94	3000.00	10.4	7.6	533	6.2	447	75	151.00	4.00	0.0	0.50	0.05	3.00	0.00	0.01					145.00	225.00
	MINA	30-10-94	5000.00	9.0	6.4							0.0	0.17	0.05	4.65	0.03							
	MINA	14-11-94	5000.00	10.0	6.5							0.0	0.18	0.00	2.20	0.00							
	MINA	23-11-94	3000.00	13.3	7.6	869	6.3	737	123	298.00	1.00	0.1	1.47	0.00	6.67	0.01	0.02					119.00	401.00
(*)	PUC	12-12-94	4000.00							276.00			2.63		5.42								
	MINA	12-12-94	4000.00		7.7							0.15	0.13	0.00	4.93	0.00	0.08						
	MINA	07-01-95	7210.00	12.0	6.6							0.03	0.95	0.34	3.46	0.00	0.00						
	MINA	13-01-95	7250.00	10.0	7.1	392		346	133	124.00		0.05	1.19	0.05	2.69	0.03	0.01						
	MINA	03-02-95	6208.00	9.0	7.1							0.03	0.05	0.00	1.47	0.00	0.02						
	MINA	10-02-95	5110.00	11.0	7.0	400	6.6	370	56	114.00		0.01	0.82	0.03	3.04	0.03	<0.01						
	MINA	25-02-95	5000.00	9.0	6.4							0.05	0.25	0.40	0.00	0.00	0.00						
	MINA	04-03-95	5100.00	8.0	6.5							0.03	0.06	0.00	1.77	0.00	0.00						
	SGS	09-03-95	5000.00									0.03	0.99		2.89	<0.03	<0.005		0.005				
	PUC	09-03-95	5000.00															0.009					

(*) Analisis de control en laboratorios externos.

BALANCE MASICO

PARAMETROS

FECHA	CAUDAL (lt/seg)	TDS (Kg/dia)	TSS (Kg/dia)	SULFATOS (Kg/dia)	NO3 (Kg/dia)	Pb (Kg/dia)	Zn (Kg/dia)	Fe (Kg/dia)	Mn (Kg/dia)	Cu (Kg/dia)	Cd (Kg/dia)	CN (Kg/dia)	As (Kg/dia)	Cr (Kg/dia)	Sb (Kg/dia)
14-02-94	5000.00					864.00	388.80	2289.60	475.20	86.40	0.00				0.00
26-04-94	4500.00					0.00	855.36	462.11	1944.00	349.92	0.00				3110.40
29-04-94	4500.00	198288.00		27604.80	4327.34	27.22	155.52	276.05	641.52	23.33	<1.94		5.44		0.00
13-05-94	3800.00					0.00	196.99	558.14	0.00	0.00	0.00		1454.48		
30-05-94	3800.00	176636.16	16416.00	59097.60		111.63	476.08	433.35	968.54	36.12			11.49	<16.42	
09-06-94	3200.00					0.00	193.54	304.13	1078.27	0.00	0.00				
07-07-94	1100.00					0.00	76.03	0.00	256.61	9.50	216.59				570.24
16-07-94	1100.00					0.00	95.04	133.06	285.12	0.00	0.00				570.24
13-08-94	1100.00					0.00	38.02	142.56	380.16	0.00	95.04				0.00
20-08-94	880.00	52061.92		16627.84		0.00	76.03	60.83	304.13	0.00	0.00				380.16
09-09-94	1000.00	59616.00	5786.60	21600.00		0.00	39.74	26.78	393.98	0.86	0.86				
24-09-94	1500.00					0.00	51.84	0.00	712.80	0.00					
01-10-94	2000.00					0.00	138.24	51.84	864.00	34.56					
15-10-94	3000.00					0.00	49.25	0.00	562.46	0.00					
19-10-94	3000.00	115862.40	19440.00	39139.20	1036.80	0.00	129.60	12.96	777.60	0.00	2.59				
30-10-94	5000.00					0.00	73.44	21.60	2008.80	12.96					
14-11-94	5000.00					0.00	77.76	0.00	950.40	0.00					
23-11-94	3000.00	191030.40	31881.60	77241.60	259.20	2.59	381.02	0.00	1728.86	2.59	5.18				
12-12-94	4000.00			96076.80			906.93		1673.15						
12-12-94	4000.00					51.84	44.93	0.00	1703.81	0.00	27.65				
07-01-95	7210.00					0.00	591.80	211.80	2155.39	0.00	0.00				
13-01-95	7250.00	216734.40	83311.23	77673.60		31.32	745.42	31.32	1685.02	18.79	6.14				
03-02-95	6208.00					0.00	26.82	0.00	786.47	0.00	<4.42				
10-02-95	5110.00					17.66	362.03	13.25	1342.17	13.25	0.00				
25-02-95	5000.00					21.0	108.00	172.80	0.00	0.00	0.00				
[illegible]	5100.00							0.00	773.33	0.00	0.00				

FIGURE 4e

workings to the East are referred to as the Herminia mine There is limited soil cover, but the complex geological history has provided many different materials locally, ranging from limestone to volcanic deposits

The Uchucchucha mine is about 200 kM North of Lima, 170 kM Northeast of Huacho, and 50 kM west of Cerro de Pasco Surface facilities are at 4500 meters elevation, just below the Continental Divide The area is almost bare of soil The topography has been altered by glaciation, resulting in series of lakes on and below the site The lakes drain to the Rio Paton, a tributary of the Rio Huaura, which flows to the Pacific The local area is sparsely populated, but there are several hydroelectric stations in the valley Rio Huaura is used extensively for irrigation below Sayan The climate is cooler than at Julcani, with an annual maximum of about 14°C, and a minimum of -3°C Annual rainfall is about 900 mm In the rainy season between October and April, rainfall can be as much as 250 mm/month

Julcani Mine

Overview

The ore is ground by crushers and ball mills in an enclosed plant The slurry is subjected to a flotation process to separate the concentrate The fine tailings underflow is then deposited in a tailings pond Figure 2 is a topographic map that shows that the mill (Planta Concentradora) is near the head of the Quebrada Palcas valley A series of filled tailings ponds or tailings piles (Deposito de Relaves #1 to #5) are arrayed in a terrace fashion below the mill Figure 3 is a flow diagram that illustrates other features, notably that three mine drains (Mimosa, Herminia and Gandolini) flow into the Palcas into succession Figures 2 and 3 also illustrate that the current tailings pond (Relaves #7) is in an adjacent valley (Quebrada Huaccya) that parallels the Quebrada Palcas but drains directly into the Rio Opamayo

Process water is obtained in wetter periods from a series of interceptor ditches that stretch across the slopes and across saddles to adjacent valleys (Canal de Ajojasha, Fig 3) When this source falters in dry seasons, mine and tailings pile drainage is recovered by pumping 40 to 120 meters up from the outlets of the Mimosa and Herminia mine audits This pumping also intercepts seepage from the old tailings piles

Figures 4a through 4e illustrate water flow and quality measurements by Buenaventura, with sampling points labeled EJ-1, EJ-2, etc The PGB team also took spot dry-weather samples, labeled JWS-1, JWS-2, etc Locations of both sets of sampling points are shown on Figure 3

Acid Drainage

The ore and bedrock both have a high iron pyrite content This causes the main environmental problem, acid drainage (AD) originating from both the mine (AMD) and tailings piles (ATD) The AD not only visibly stains the Quebrada Palcas flow, but a distinct plume is visible for hundreds of meters below the confluence with the much larger Rio Opamayo This causes public relations problems in Lircay In addition, there is no sewage treatment Sanitary wastewater from the mining camp is discharged directly into the Quebrada Palcas

The AMD problem is quite visible at the lowest adit, the Tunel Gandolini This outlet is Buenaventura water quality sampling point EJ-3 and PGB sample is JWS-3 The accumulated EJ-3 data is shown on Figure 4a The AMD discharge ranges from 8 l/s to 30 l/s The pH is consistent in the range 1 9 to 3 0 This AMD has a high concentrations of iron, manganese, zinc, copper, and lead The iron content ranges from 700mg/l to 2500 mg/l The lead concentration often exceeds the US standard Maximum Concentration Limit (MCL) of 0 5 mg/kg (ppm) The analytical results of the corresponding PGB sample JWS-3 (shown in Appendix C), are a pH of 2 6, minimal alkalinity, 0 53 ppm of lead, and 550 ppm iron At this site, AMD is not just an acidity problem, but a significant method of metallic solute mobilization

The Tunel Gandolini drain discharges into the Quebrada Palcas, joining other acidic discharges These include seepage from the old tailings and waste rock piles as well as the mine drains Sampling point EJ-14/JWS-4 reflects all of these discharges and is on the Palcas just above its confluence with the Opamayo The data is documented on Figure 4b and Appendix C The wet season (February) flow from the mine valley is the range of 100 to 300 l/s The pH varies from 2 9 to 9 5, with slight metals concentrations The low-flow (June) PGB values for JWS-4 show a pH of 2 6, but no detectable lead and a low iron concentration

Tailings Acidification

The iron pyrite oxidation, catalyzed by microrganisms in the tailings becomes acidified when exposed to air or another source of oxygen This is illustrated by PGB sampling point JWS-6, which is located just downstream of the set of five old tailings piles (Fig 3) The pH is 3 1, the lead concentration is 0 21 ppm, and there is a very high iron content of 1750 ppm However, the initial slurry deposition is not acidic, as illustrated by the inflow to the current tailings pond at the head of the Quebrada Huaccya Sampling point EJ-7/JWS-2 measures the slurry quality The EJ-7 pH range is from 5 8 to 9 9, with the former representing dry-season operation, such that the process water is partially derived from recovered mine drainage The slurry liquid contains minimal dissolved metals, as would be expected with an efficient milling process The

corresponding PGB sampling JWS-2 taken at the slurry pipe discharge onto the pond confirms this with a pH of 6 0 and iron content of 0,86 ppm However, at that sampling, the lead content was 0 25 ppm

Acidification of the active tailings pond is illustrated by data from EJ-4, shown on Fig 4c The sampling point is at the outlet of the tailings pond underdrain that amounts to being the "source" of the Quebrada Huaccya The pH was in the 4 to 7 range in 1994, but dropped to pH = 3 in early 1995, Metals content increased (Fe 200-400 mg/l) This was also shown with sample JWS-1, with pH =3 6 Liquid pH thus drops 2 4 orders of magnitude in transit through through the tailings Since the active tailings pond is saturated, the slurry flow (15 to 20 l/s) brings oxygen into the tailings

Impact on Local Water Resources

Finally, the issue is the measurable effect on the Rio Opamayo Fig 4d illustrates sampling at EJ-1, upstream of the confluence with the Palcas The Opamayo flow has been measured as ranging from 800 l/s to 21,000 l/s, pH ranging from 7 to 8, and detection of less than 1 0 mg/l of any of the metals The PGB sample JWS-5 indicated a pH of 8 5 Downstream of discharges from both the Palcas and the Huaccya, at EJ-2 (Fig 4e), the pH is generally 6 5 to 7 5 and iron content is minimal

Future Plans and Mitigating Measures Underway

There are four measures underway that may mitigate negative impact on the Quebrada Palcas and the Rio Opamayo

1 Extending the stormwater interceptor ditch system This will extend the period of time when the mill uses neutral process water It will also reduce infiltration into the waste rock and old tailings piles which generates acidic drainage at the head of the Palcas

2 The Acchilla tunnel will be completed shortly, providing acccess to a new tailings deposit in Pongoshuayco valley, which drains into the Opamayo below Lircay Drainage collected at the Mimosa and Herminia adits will also be diverted to Acchilla There is room in this valley for a treatment system such as PGB

3 Unused mine levels will be blocked, reducing seepage to Tunel Gandolini Intercepted flow will be diverted to the Mimosa and Herminia Mine adits, and thence to Acchilla This will decrease the Tunel Gandolini discharge

4 The old tailings piles are being regraded to shed runoff and covered with earth to reduce infiltration and increase vegetation, evaporation and transpiration

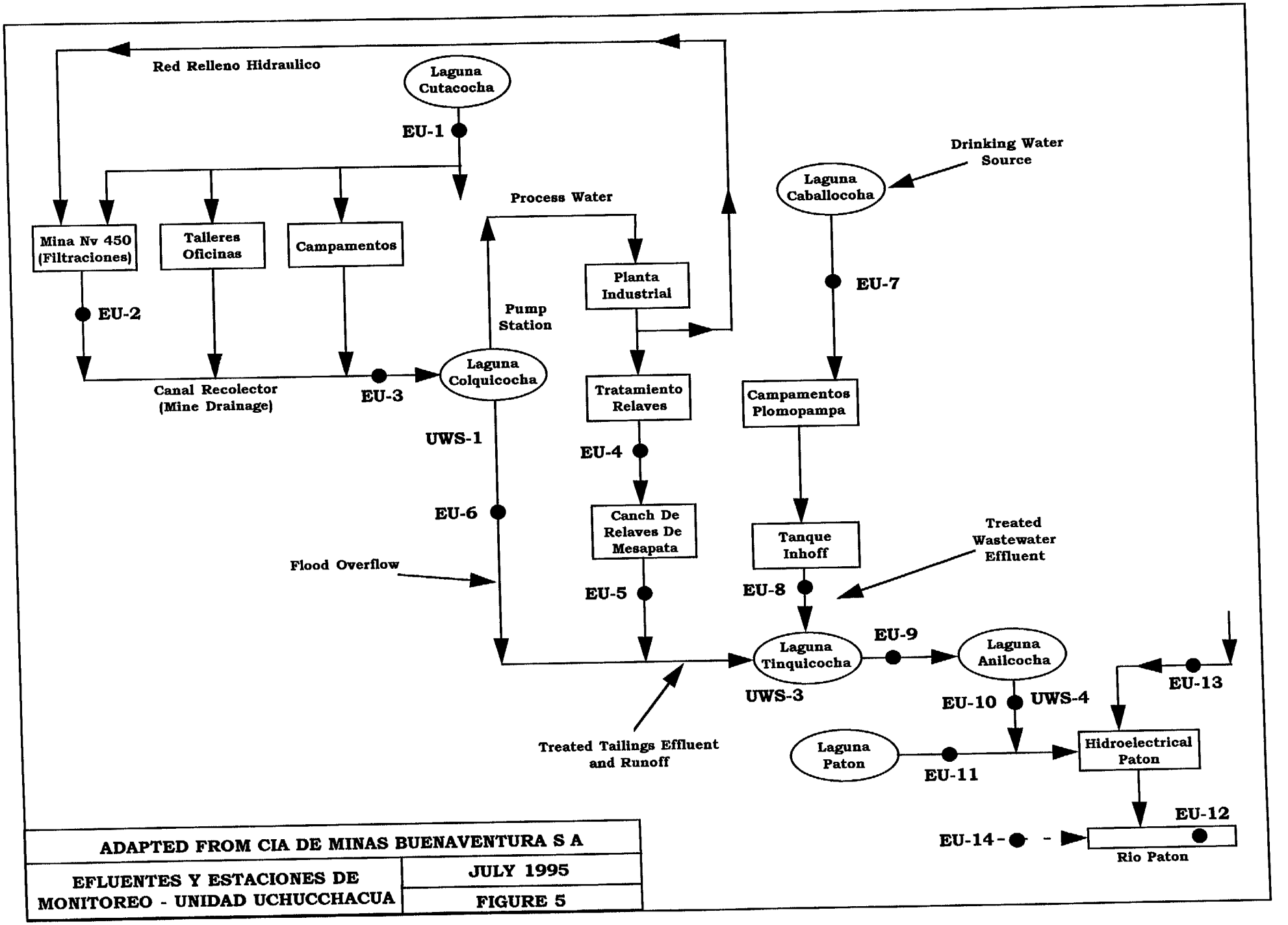

ADAPTED FROM CIA DE MINAS BUENAVENTURA S A	
EFLUENTES Y ESTACIONES DE MONITOREO - UNIDAD UCHUCCHACUA	JULY 1995
	FIGURE 5

35

The lessened Tunel Gandolini drainage will still go down the Palcas, as will drainage from the current tailings pond These are permanent sources of acid drainage, so treatment will be required, such as PGB

Uchucchacua Mine

Overview

This is a larger mine than Julcani, processing about 1200 metric tons/day The bedrock is metamorphic in which the ore is ahighly mineralized vein The primary concentration process is similar to that at Julcani ore grinding in ball mills, floatation to separate the concentrate, and disposal of the tailings slurry However, the resulting concentrate has an excessive amount of manganese, which could cause explosions during smelting Consequently, a lixivation process is used on a portion of the concentrate to reduce manganese content The waste generated is co-disposed with the tailings Tailings drainage causes an environmental concern when the managanese either discolors downstream waters or precipitates on the banks Where mines with acid mine drainage may have bright red waterways downstream, Uchucchacua has blackened streambeds A unique feature of the site, a series of lakes formed by glaciers, highlights this problem due to the visibility and residence time in each lake

There is plenty of surface water at Uchucchacua Potable water is obtained from Lake Caballocoha, above and away from the mill As shown on Fig 5, there are three main lakes in succesion below the mill Laguna Colquicocha, Laguna Tinquecocha, and Laguna Anilcocha Surface drainage from the valley upstream and to the Northwest is intercepted and diverted through an excavated channel around the first two The mines drain into Laguna Colquicocha, and process water is pumped from it at the rate of approximately 37 l/s In this configuration, Laguna Colquicocha functions as a reservoir supporting internal recirculation of mine drainage The hydrologic isolation of the mine drainage is precautionary As described below, the mine drainage is not acidic Uchucchacua is one of the few mines in Peru with little iron pyrite in the bedrock or ore However,with the long-term expansion of the tailings deposit as described below, the diversion channel will allow runoff to flow from the uplands to Laguna Anilcocha without contacting the industrial area

The mine has operated since 1975 The terraced tailings piles are located between Laguna Colquicocha and Laguna Tinquecocha, and drain into the latter The effect of the past release of excess manganese is evident by the blackened rocks on the shore of Laguna Anilcocha, which is on the order of 100 hectares in surface area,

MONITOREO DE LA CALIDAD DE AGUA

NOMBRE DE LA COMPAÑIA: CIA DE MINAS BUENAVENTURA S A
UNIDAD MINERA: UCHUCCHACUA
ESTACION: EU 3
UBICACION: Canal colector agua de mina oficinas y talleres

ANALISIS QUIMICO

	LAB	FECHA	CAUDAL (lt/seg)	TEMP (C)	pH	CONDUCT (umhs/cm)	OXIG DIS (mg/lt)	TDS (mg/lt)	TSS (mg/lt)	SULFATO (mg/lt)	NO3 (mg/lt)	Pb (mg/lt)	Zn (mg/lt)	Fe (mg/lt)	Mn (mg/lt)	Cu (mg/lt)	Cd (mg/lt)	As (mg/lt)	Alcalin (mg/lt)	Dureza (mg/lt)	Turbidez (NTU)
			PARAMETROS																		
( )	SGS	13-05-94	60 00		7 2																
( )	SGS	23 05-94	55 00	12 0	7 1			440	78	168 00	3 01	0 04	0 31	0 08	6 50		<0 005	0 070	109 00		
( )	SGS	15-06-94	60 00	10 0	7 4			772	54				0 19	0 09	3 12		<0 005	0 034	85 00		
( )	SGS	08 07 94	30 00	8 5	7 2			1008		562 00	39 60	0 03	0 14	0 15	8 15		<0 005	0 055	170 00		8 00
( )	SGS	26-08 94	20 00	6 0	7 4					265 00					3 16						
	MINA	05-10-94	35 00	8 0	8 0	509	2 2	712		299 00					29 80						
	MINA	07 10-94	50 00	8 0	8 0	509	2 5	721	438	323 00	110 00	0 03	[illegible]	[illegible]	[illegible]	0 01	0 00		85 00	399 00	
	MINA	08 11 94	[illegible]	[illegible]	[illegible]	520	[illegible]	761	[illegible]	[illegible]		[illegible]	[illegible]	[illegible]	[illegible]	0 01					
	MINA	13 12 94	45 00	8 0	8 3	513	5 0	917	835	328 00	50 00	0 03	0 28	0 05	3 32	0 00	0 00		396 00	424 00	
	MINA	19-01 95	47 00	5 7	8 0	514		701	0	263 00	10 00	0 10	0 93	0 50	5 90	0 00			133 00	376 00	
	MINA	22 02 95	6 00	5 4	7 5	675	7 4	493	1490	291 00		0 80	0 05	<0 03	4 31	<0 01					
		PROM	41 45	8 18	7 47	556 67	4 52	942	281	481 00		0 05	0 41	0 02	12 60	<0 005					
			711 70	449 25	330 30	42 52	0 11	0 27	0 11	7 32	0 00	0 00	0 05	164 67	399 67	8 00					

( ) Analisis realizado en laboratorio externo

BALANCE MASICO

FECHA	CAUDAL (lt/seg)	TDS (Kg/dia)	TSS (Kg/dia)	SULFATOS (Kg/dia)	NO3 (Kg/dia)	Pb (Kg/dia)	Zn (Kg/dia)	Fe (Kg/dia)	Mn (Kg/dia)	Cu (Kg/dia)	Cd (Kg/dia)	As (Kg/dia)
	PARAMETROS											
13-05-94	60 00	2280 98	404 35	870 91	15 60	0 21	1 61	0 41	33 70		<0 026	0 36
23-05-94	55 00	3668 54	256 61			0 90	0 43	14 83			<0 024	0 16
15-06-94	60 00	5225 47		2913 41	205 29	0 16	0 73	0 78	31 88		<0 026	0 29
08-07 94	30 00			686 88					8 19			
26-08-94	20 00	1230 34		516 67					51 49			
05-10-94	35 00	2180 30	1324 51	876 75	332 64	0 09	0 15	0 15	8 53	0 03	0 00	
07 10-94	50 00	3114 72	1892 16	1395 36		0 13	0 22	0 22	12 18	0 04		
08-11 94	48 00	2558 82	3421 44	1360 28	207 38	0 12	1 08	0 21	13 77	0 00	0 00	
13-12 94	45 00	2725 49	0 00	1022 54	38 88	0 39	3 62	1 94	22 94	0 00		
19-01 95	47 00	1961 37	6009 98	1181 69		2 44	0 20	<0 29	17 50	<0 098		
22 02 95	6 00	488 33	145 67	249 35		0 03	0 21	0 01	6 53	<0 002		
PROM	41 45	2543 43	1681 84	1117 39	159 95	0 44	0 97	0 48	20 14	0 01	0 00	0 27

FIGURE 6a

MONITOREO DE LA CALIDAD DE AGUA

NOMBRE DE LA COMPAÑIA: CIA D MINAS BUENAV NTURA S A
UNIDAD MINERA: UCH CHACUA
ESTACION: EU 5
LUGAR DE ACCION: Agua de la cada de la ... de

ANALISIS QUIMICO

LAB	FECHA	CAUDAL (lt seg)	TEMP (C)	pH	CONDUCT (umhs/cm)	OXIG DIS (mg/lt)	TDS (mg/lt)	TSS (mg lt)	SULFATOS (mg/lt)	NO3 (mg/lt)	Pb (mg lt)	Zn (mg/lt)	Fe (mg lt)	Mn (mg/lt)	Cu (mg lt)	Cd (mg/lt)	As (mg/lt)	Cr (mg lt)	Alcalin (mg lt)	Dureza (mg/lt)	Turbidez (NTU)
		ARAMETROS																			
MINA	11-05-94	28 00		7 1										331 00							
( ) SGS	13-05-94	28 00		6 8			3561	811	1854 00	33 15	0 04	0 20	0 31	138 20		<0 005	<0 005		9 00		
MINA	16-05-94	28 00		7 6										331 00							
MINA	19-05-94	28 00		7 3										777 00							
MINA	21-05-94	28 00		4 7										215 00							
( ) SGS	23-05-94	28 00	10 0	7 1			3727	362				0 15	0 05	338 00		<0 005	0 020		44 00		
MINA	25-05-94	28 00		6 3										66 00							
(*) PUC	03-06-94	28 00	7 0	7 2				132	1950 00		0 05	0 14	0 17	162 00		0 012		<0 01			
(*) SGS	15-06-94	28 00	6 9	7 3			3534		2083 00	32 48	<0 03	0 18	0 06	1,0 00		<0 005	0 009		<1		8
(*) SGS	08-07 94	28 00	6 0	7 5					2941 00					450 00							
MINA	05-08-94	28 00												215 00							
MINA	12-08-94	28 00												56 00							
MINA	19-08-94	28 00												779 00							
MINA	24 08-94	28 00		6 7										1765 00							
MINA	26-08-94	28 00	6 0	6 3		2 8	6373		3796 00					336 00							
MINA	07 10-94	24 00	10 5	7 6	>2000	3 6	7275	275	4356 00		0 21	0 85	0 14	1366 00	0 32						
MINA	11 10-94	25 00	11 0	7 5	>2000									1086 00							
MINA	03-11 94	25 00	8 0	7 5	>2000									939 00							
MINA	08-11 94	25 00	11 5	6,2	>2000	3 1	5266	473	3295 00	10 00	0 13	0 44	0 07	613 35	1 01	0 03			209 00	2000 00	
MINA	12 11 94	25 00	11 0	7 8	>2000									384 00							
MINA	30-11 94	25 00	11 0	7 0	>2000									1200 00							
MINA	06-12 94	25 00	10 0	6 1	>2000									1307 00							
MINA	13-12 94	25 00	[illegible]	[illegible]	[illegible]	3 8	4743	186	[illegible]	1 58	[illegible]	[illegible]	[illegible]	[illegible]	[illegible]						
MINA	19-01 95	[illegible]	[illegible]	[illegible]	>2000		6914	17	3066 00		0 12	0 23	<0 03	469 00	0 02				81 00	2480 00	
MINA	20-01 95	20 00		7 9										1460 00							
MINA	16-02 95	16 00																			
MINA	22-02 95	13 00	7 4	6 3	>2000	6 5	7674	14	11025 00		0 22	0 89	0 19	1247 00	0 02						
PROM		25 56	9 26	7 15	0 00	3 96	5365 69	283 71	3640 70	19 29	0 13	0 51	0 13	702 95	0 23	0 01	0 01	0 00	56 60	2240 00	8 00

( ) Analisis realizado en laboratorio externo

BALANCE MASICO (EU 5)

FECHA	CAUDAL (lt/seg)	TDS (Kg/dia)	TSS (Kg/dia)	SULFATOS (Kg/dia)	NO3 (Kg/dia)	Pb (Kg dia)	Zn (Kg/dia)	Fe (Kg/dia)	Mn (Kg/dia)	Cu (Kg/dia)	Cd (Kg/dia)	As (Kg/dia)	Cr (Kg/dia)
	PARAMETROS												
11-05-94	28 00								800 76				
13-05-94	28 00	8614 77	1961 97	4485 20	80 22	0 10	0 48	0 75	334 33		<0 012	<0 012	
16-05-94	28 00								800 76				
19-05-94	28 00								1879 72				
21-05-94	28 00								520 13				
23-05-94	28 00	9016 36	875 75				0 36	0 12	817 69		0 012	0 05	
25-05-94	28 00								159 67				
03-06-94	28 00		318 61	4717 44		0 12	0 34	0 41	391 91		0 03		<0 02
15-06-94	28 00	8549 45		5039 19	78 58	<0 073	0 44	0 15	362 88		<0 012	0 02	
08-07 94	28 00			7114 87					1088 64				
05-08-94	28 00								520 13				
12-08-94	28 00								159 67				
19-08-94	28 00								1884 56				
24-08-94	28 00								4269 89				
26-08-94	28 00	20256 96		9183 28					812 86				
07 10-94	24 00	15086 44	570 24	9032 60		0 44	1 76	0 29	2832 54	0 66			
11 10-94	25 00								2345 76				
03-11 94	25 00								2028 24				
08-11 94	25 00	11374 56	1021 68	7117 20	21 60	0 28	0 95	0 15	1324 84	2 18	0 06		
12 11 94	25 00								829 44				
30-11 94	25 00								2532 00				
06-12 94	25 00								2887 92				
13-12 94	25 00	10257 84	401 76	8724 24	3 24	0 43	1 27	0 43	2861 20	0 00			
19-01 95	22 00	8200 05	92 31	5831 65		0 23	0 44	<0 057	927 59	0 04			
20 01 95	20 00								2522 88				
16-02 95	16 00												
22-02 95	13 00	8619 44	15 72	12383 8		0 30	1 23	0 26	1723 85	0 03			
PROM	25 56	11108 21	643 76	7362 90	45 91	0 22	1 55	0 09	1594 94	0 02			
						0 4	0 88	0 27	1454 25	0 49	0 02	0 02	0 00

FIGURE 6b

MONITOREO DE LA CALIDAD DE AGUA

NOMBRE DE LA COMPANIA	CIA DE MINAS BUENAVENTURA S A
UNIDAD MINERA	UCHUCCHACUA
ESTACION	EU - 8
UBICACION	Aguas servidas campamento Plomopampa

ANALISIS BACTERIOLOGICO

LABORATORIO	FECHA	Colif Totales (en 100ml)	Colif Fecales (en 100ml)
SGS	13-05-94	2400	2400
SGS	03-06-94	1600	1600
SGS	07-10-94	2400	2400

FIGURE 6c

MONITOREO DE LA CALIDAD DE AGUA

NOMBRE DE LA COMPAÑIA: CIA DE MINAS BUENAVENTURA S A
UNIDAD MINERA: UCHUCCHACUA
ESTACION: EU 9
UBICACION: Laguna Tinquicocha

ANALISIS QUIMICO

	LAB	FECHA	CAUDAL (lt/seg)	TEMP (C)	pH	CONDUCT (umhs/cm)	OXIG DIS (mg/lt)	TDS (mg/lt)	TSS (mg/lt)	SULFATO (mg/lt)	NO3 (mg/lt)	Pb (mg/lt)	Zn (mg/lt)	Fe (mg/lt)	Mn (mg/lt)	Cu (mg/lt)	Cd (mg/lt)	As (mg/lt)	Cr (mg/lt)	Alcalin (mg/lt)	Dureza (mg/lt)	Turbidez (NTU)
			PARAMETROS																			
( )	SGS	13-05-94	75 00		6 9																	
( )	SGS	23-05-94	73 00	9 0	7 0			2068	23	1189 00	14 84	0 08	0 57	15 00	215 90		<0 005	0 009				
( )	PUC	03-06-94	75 00	8 0	7 8			2420	28				0 38	0 06	188 80		<0 005	<0 005		4 00		
( )	SGS	15-06-94	40 00	7 0	7 5					1375 00		0 05	0 17	0 28	186 00		0 008			34 00		
( )	SGS	08-07 94	6 00	8 0	7 9			2314		1372 00	6 15	<0 03	0 14	0 10	168 20		<0 005	0 008	<0 01			
	MINA	05-08-94	6 00	8 0	7 5					1610 00				0 18	177 00					9 00		<1
	MINA	12 08-94	5 50	8 5	7 5										247 00							
	MINA	19-08-94	5 50	8 5	7 0										200 00							
( )	SGS	24 08-94	5 00		6 8										247 00							
( )	SGS	26-08-94	5 00	8 5	7 0		4 3	3633		1878 00					535 00							
	SGS	06-09-94	5 00		7 2										234 70							
	MINA	07 10-94	5 00	11 0	7 4	1657	1 8	3263	225	2053 00	22 00	0 15	0 00	0 11	589 00							
	MINA	11 10-94	5 00	11 0	7 2	1630									252 00	0 02	0 03			24 00	2046 00	
	MINA	03-11 94	6 00	10 0	7 6	1642									261 00							
	MINA	08-11 94	5 50	11 7	8 4	1972	7 1	3305	58	2038 00	10 00	0 05	0 41	0 05	296 00							
	MINA	12 11 94	6 00	11 0	7 9	1635									241 60	0 04	0 02			19 00	1610 00	
	MINA	30-11 94	6 00	10 0	7.2	1630									287 00							
	MINA	06-12 94	6 00	10 0	7 7	1770									227 00							
	MINA	13-12 94	10 00	14 8	8 2	1940	7 5	9400	81	2796 00	8.00	0 10	0 13	0 10	214 00							
	MINA	19 01 95	33 00	16 7	7 8	1830		10[illegible]	56	[illegible]		0 03	0 08	<0 03	366 00	9 00				84 00	1850 00	
	MINA	26-01 95	25 00		8 5										366 00	0 81						
	MINA	16-02 95	20 00												390 09							
	MINA	22 02 95	20 00	9 6	7 6	1648	6 5	2507	32	1933 00		0 13	0 19	0 19	518 00	0 02						
	PROM		19 50	9 83	7 43	1735 40	5 44	2667 11	64 57	1834 60	11 60	0 10	0 31	0 04	455 60	0 02						
												0 08	0.24	1 46	299 69	0 02	0 01	0 01	0 00	19 00	1768 87	0 00

( ) Analisis realizado en laboratorio externo

BALANCE MASICO

FECHA	CAUDAL (lt/seg)	TDS (Kg/dia)	TSS (Kg/dia)	SULFATO (Kg/dia)	NO3 (Kg/dia)	Pb (Kg/dia)	Zn (Kg/dia)	Fe (Kg/dia)	Mn (Kg/dia)	Cu (Kg/dia)	Cd (Kg/dia)	As (Kg/dia)	Cr (Kg/dia)
	PARAMETROS												
13-05-94	75 00	13530 24	149 04	7704 72	96 16	0 52	3 69	97 20	1399 03		<0 03	0 06	
23-05-94	73 00	15263 42	176 60				2 40	0 38	1190 80		<0 03	<0 03	
03-06-94	75 00			8910 00		0 32	1 10	1 81	1205 28		0 05		<0 06
15-06-94	40 00	7997 18		4741 63	21.25	<0 10	0 48	0 35	581 30		<0 02	0 03	
08-07 94	6 00			834 62				0 09	91 76				
05-08-94	6 00								128 04				
12 08-94	5 50								95 04				
19-08-94	5 50								117 37				
24-08-94	5 00								231 12				
26-08-94	5 00	1578 10		811 30					101 39				
06-09-94	5 00								254 45				
07 10-94	5 00	1409 62	97.20	886 90	9 50	0 08	0 00	0 05	108 86	0 01	0 01		
11 10-94	5 00								112 75				
03-11 94	6 00								153 45				
08-11 94	5 50	1570 54	27 56	968 46	4 75	0 02	0 19	0 02	114 81	0 02	0 01		
12 11 94	6 00								148 78				
30-11 94	6 00								117 68				
06-12 94	6 00								110 94				
13-12 94	10 00	2937 60	52 70	2415 74	4 32	0 09	0 11	0 09	316 22	0 00			
19 01 95	33 00	3005 16	71.28	5993 22		0 26	0 23	<0 09	1129 08	0 03			
26-01 95	25 00								842 40				
16-02 95	20 00								895 10	0 03			
22 02 95	20 00	4332 10	55 30	3340 22		0 22	0 33	0 33	787 28	0 03			
PROM	19 50	5736 00	89 95	3660 68	27.20	0 17	0 54	0 07	444 91	0 02	0 01	0 03	0 00
						0 19	0 91	9 13					

FIGURE 6d

MONITOREO DE LA CALIDAD DE AGUA

NOMBRE DE LA COMPAÑIA: CIA DE MINAS BUENAVENTURA S A
UNIDAD MINERA: UCHUCCHACUA
ESTACION: EU 10
UBICACION: Laguna Añilcocha

ANALISIS QUIMICO

	LAB	FECHA	CAUDAL (lt/seg)	TEMP (C)	pH	CONDUCT (umhs/cm)	OXIG DIS (mg/lt)	TDS (mg/lt)	TSS (mg/lt)	SULFATOS (mg/lt)	NO3 (mg/lt)	Pb (mg/lt)	Zn (mg/lt)	Fe (mg/lt)	Mn (mg lt)	Cu (mg/lt)	Cd (mg/lt)	As (mg lt)	Cr (mg/lt)	Alcalin (mg/lt)	Dureza (mg lt)	Turbidez (NTU)
			PARAMETROS																			
( )	SGS	13-05-94	150 00		6 6	1 23		2088	17	819 00	10 20	0 14	0 58	13 20	111 80		<0 005	0 037		13 00		
( )	SGS	23-05-94	78 00	10 0	7 1			1317	11				0 33	<0 03	94 80		<0 005	<0 005		4 00		
( )	PUCP	03-06-94	800 00	7 0	6 8				8	687 00		0 05	0 12	0 11	95 00		0 01		<0 01			
( )	SGS	15-06-94	431 00	7 3	7 0			1234		715 00	7 87	0 04	0 13	0 04	81 40		<0 005	<0 005		12 00		<1
( )	SGS	08-07-94	208 00	8 0	6 8					802 00				0 09	82 00							
	MINA	05-08-94	315 00	7 0	7 1										97 00							
	MINA	12-08-94	323 00	7 5	6 9										95 00							
	MINA	19-08-94	309 00	7 0	7 0										95 00							
( )	SGS	24-08-94			7 2										71 50							
( )	SGS	26-08-94	344 00	8 0	6 9		4 3	1568		840 00					90 00							
( )	SGS	06-09-94			6 8										113 00							
	MINA	07-10-94	250 00	10 1	7 6	889	4 5	1239	103	847 00	22 00	0 05	0 00	0 04	92 00	0 01	0 01			5 00	857 00	
	MINA	11-10-94	350 00	10 0	6 7	880									97 00							
	MINA	03-11-94	250 00	11 0	7 4	880									96 00							
	MINA	08-11-94	250 00	10 0	8 0	1050	7 3	1230	121	835 00	3 00	0 02	0 10	0 01	90 10	0 00	0 01			6 00	865 00	
	MINA	12-11-94	250 00	9 0	7 4	850									67 00							
	MINA	30-11-94	250 00	10 0	7.2	830									61 00							
	MINA	06-12-94	150 00	11 0	7 2	832									77 00							
	MINA	13-12-94	20 00	8 0	8 0	1004	7 8	978	78	809 00	1 00	0 10	0 06	0 19	93 80	0 00						
	MINA	19-01-95	17 00	10 4	8 1	984		1576	4	887 00		0 59	0 81	<0 09	88 70	<0 01				78 00	850 00	
	MINA	26-01-95	17 00		7 2										90 00							
	MINA	16-02-95	18 00									0 08	0 01	0 06	22 20	<0 01						
	MINA	22-02-95	20 00	8 3	8 1	1008	5 2	1382	7	822 00		0 05	0 08	0 04	99 20	0 01						
	PROM		226 57	9 09	7 17	829 11	5 76	1334 33	43 63	750 30	8 81	0 06	0 14	1 24	81 49	0 00	0 01	0 01	0 00	19 83	790 67	0 00

( ) Analisis realizado en laboratorio e terno

BALANCE MASICO (EU 10)

FECHA	CAUDAL (lt/seg)	TDS (Kg/dia)	TSS (Kg/dia)	SULFATOS (Kg/dia)	NO3 (Kg/dia)	Pb (Kg/dia)	Zn (Kg/dia)	Fe (Kg/dia)	Mn (Kg/dia)	Cu (Kg/dia)	Cd (Kg/dia)	As (Kg/dia)	Cr (Kg/dia)
	PARAMETROS												
13-05-94	150 00	27060 48	220 32	10614 24	132 19	1 81	7 52	171 07	1448 93		<0 065	0 48	
23-05-94	78 00	8875 53	74 13				2 22	<0 20	638 88		<0 034	<0 034	
03-06-94	800 00		552 96	47485 44		3 46	8 29	7 60	6566 40		0 69		<0 69
15-06-94	431 00	45852 19		26625 46	283 07	1 49	4 84	1 49	3031 21		<0 186	<0 186	
08-07-94	208 00			14412 90				1 62	1473 64				
05-08-94	315 00								2639 95				
12-08-94	323 00								2651 18				
19-08-94	309 00								2538 27				
24-08-94	330 00								2038 61				
26-08-94	344 00	46603 47		24968 14					2674 94				
06-09-94	300 00								2928 96				
07-10-94	250 00	26762 40	2224 80	18295 20	475 20	1 08	0 00	0 86	1997 20	0 22	0 22		
11-10-94	350 00								2933 28				
03-11-94	250 00								2073 60				
08-11-94	250 00	26568 00	2613 60	18036 00	64 80	0 43	2 16	0 22	1946 16	0 00	0 22		
12-11-94	250 00								1447 20				
30-11-94	250 00								1317 60				
06-12-94	150 00								997 92				
13-12-94	20 00	1517 18	134 78	1052 35	1 73	0 17	0 14	0 17	58 06	0 00			
19-01-95	17 00	1576 02	5 88	774 06		0 07	0 01	<0 044	33 34	<0 015			
26-01-95	17 00								132 19				
16-02-95	18 00					0 09	0 02	0 09	34 53	<0 02			
22-02-95	20 00	2388 10	12 10	1420 42		0 09	0 14	0 07	171 42	0 02			
PROM	236 09	20811 48	729 82	16368 22	193 40	0 97	2 53	16 65	1815 72	0 04	0 19	0 16	0 00

FIGURE 6e

and more or less represents the edge of the mine district At the time of the site visit, in the dry season, the lake level was several meters below the spillway elevation

To mitigate the manganese problems, a bulk lime treatment facility has been installed along the channel from the tailings pond to Laguna Tinquiciocha A permeable rock dike was built across the lake to allow the lime to disperse and managanese to precipitate in the upstream portion of the lake The tailings effluent flows into the lake at about 40 l/s in the dry season, such that the retention time in the lake embayment is on the order of weeks or months The effectiveness of the lime treatment is not only illustrated by the water quality, but by the black manganese carbonate precipitated on the exposed delta sands just below the lime treatment site However, this is quite costly, reportedly on the order of $30,000 per month

Sanitary wastewater from the mining camp receives primary treatment in an Imhoff tank and is disharged into the downstream half of Laguna Tinquecocha, below the dike

Water Sampling

The quality of the blended mine drainage is measured at the inflow to Laguna Colquicocha, at Beunaventura sampling point EU - 6, as shown on Figure 5 The 1994 data record is shown on Figure 6a It can be seen that the flow rate is varies from 20 l/s to 60 l/s The absence of pyrite is seen by the slightly basic pH, in the range of 7 to 8 and there are few solutes in significant quantities, but manganese is notably the highest concentration, ranging from 3 to 30 mg/l The PGB team obtained water sample UWS-1 from Laguna Colquicocha, at the process water pumphouse Appendix C indicates that the pH was 6 6, lead and iron were below the detection limit, but manganese was measured at 372 mg/l

Thus, the mill process water starts with a "background" managanese content Depending upon solubility, this might tend to be increased in the tailings effluent due to manganese removal from the ore concentrate in the lixivation plant Sampling point EU-5 is at the tailings pond outlet (Fig 5) and results are documented on Fig 6b The pH is neutral, lead and iron are still low, and the manganese concentration in the effluent varies considerably, from 66 to 1400 mg/l, but generally in the range of two or three times the oncentration in the process water The PGB sample UWS-3 was taken at the same point in a dry season, and showed a pH of 6 5 and a manganese concentration of 52 mg/l

The other mine input into Laguna Tinquicocha is the sanitary flow from the Imhoff tank The effluent is not chlorinated Sampling point EU-8 (Fig 6c) indicates a high bacterial population in the sanitary effluent, which must be addressed in some manner However, both the organic content and the microbiological

population may be of value in a PGB solution that involves co-disposal of sanitary and tailings effluents

The effectiveness of the bulk lime treatment can be seen with sampling point EU-9, below the dike in Laguna Tinqucocha Analysis results shown on Fig 6d indicates a neutral pH of 7 to 8, and consistent reduction of the Manganese to a range of 150 to 250 mg/l most of the time, but occaisional spikes to the 400 to 500 mg/l level The bulk lime treatment and the isolation of the mixing and precipitation area by the dike not only successfully reduce manganese content to the naturally high background level, but produce a consistency that protects downstream aquatic life trom shock loading

Finally, sampling results at Laguna Anilcocha provide a representation of both the effluent delivered to the Rio Paton and the combined effects of dilution from the rest of the watershed and the detention time in the lake Results of analysis from sampling point EU-8, at Laguna Anilcocha, are shown on Fig 6e The managanese concentrations are consistently in the range of 50 to 100 mg/l That concentration may reflect slow desorption of the managenese that coated the banks before the lime treatment was initiated PGB sample UWS-4, at the spillway area, showed 80 mg/l managanese

It can be concluded that the bulk lime treatment to remove managanese from the tailings effluent is successful However, it is costly, and effective only as long as the mine operates Post-abandonment tailings drainage would probably result in degraded water quality

Future plans

The ongoing production will generate more tailings, and the production rate is expected to increase Thus, additional tailings disposal capacity is required The local runoff diversion described earlier was installed to accomodate conversion of Laguna Tinquicocha to a new tailings disposal site This was also part of the reason for the dike across the lake, forming a "starter dike" for deposition in the upper portion of the lake first This will inundate the tailings effluent treatment suystem in place, which is reagarded as temporary anyway A permanent solution is sought

The solution proposed by the PGB team was to use the deep cut on the road from the plant to Laguna Anilcocha as the outlet path for future drainage This provides a channel about 8 m wide, up to 5 m deep, and several hundred meters long A porous geochemical barrier can be placed in the lower part of the cut, providing an extremely long and favorable detention time The effluent is already neutral, such that the goal is to produce reducing conditions to obtain the proper Eh-pH conditions As indicated above, this will be assisted by co-disposal of the tailings and the

43

sanitary effluents Diversion of the sanitary effluent discharge point from its present location in Laguna Tinquicocha is required anyway Discharge of this effluent into the porous bed formed in the bottom of the road cut will cause an anaerobic and reducing condition Figure 6b indicates that the tailings effluent is of low oxygen content, so its rapid depletion due to biological activity is expected Some additional organic matter might be need to sustain the bacterial film on the particulates Work is needed on selecting the appropriate medium for the PGB to support removal is required, but high efficiency on a volumetric basis is not required due to the large volume available in the road cut

44

Appendix C

Results of Water Quality Sample Analysis

Julcani and Uchucchacua Mines

May-June 1996 Visit

USAID/Peru Porous Geochemical Barriers Project

Drexel University - Georgia Institute of Technology

ENVIROLAB - PERU

Environmental Laboratories Peru S.A.

INFORME DE ENSAYO N°
60612

Solicitante DREXEL UNIVERSITY

Domicilio legal 3141 Chestnut Street
Philadelphia, Pennsylvania 19104

Tipo de muestra Agua
Identificacion
Fecha de Ingreso 96/06/13
Codigo ENVIROLAB - PERU 60612
Referencia Mr Dennis G Grubb / Josep B Martin

Analisis pH **Método** EPA 150 1

Código de laboratorio	Descripción de muestra	Fecha de Muestreo	Límite de detección	Resultado	Unidad	Fecha de Análisis
60612-02	UWS-2	*	—	4 3 R	—	96/06/14
60612-03	UWS-3	*	—	6 5 R	—	96/06/14
60612-05	JWS-1	*	—	3 6 R	—	96/06/14
60612-06	JWS-2	*	—	6 0 R	—	96/06/14
60612-07	JWS-3	*	—	2 6 R	—	96/06/14
60612-08	JWS-4	*	—	2 6 R	—	96/06/14
60612-09	JWS-5	*	—	8 5 R	—	96/06/14
60612-10	JWS-6	*	—	3 1 R	—	96/06/14
60612-11	UWS-X	*	—	6 6 R	—	96/06/14

***

* Semana del 03 de junio 1996
NOTA **R"** La muestra llego al Laboratorio vencido su tiempo de vida

LUIS BUENO CARBAJAL
Gerente General
C I P N° 6618

Lima Peru, 3/07/96

Los resultados presentados corresponden solo a la muestra indicada.
Esta prohibido la reproduccion parcial o total del presente documento salvo autorización de Envirolab Peru
SM denota un método de "Standard Methods for the Examination of Water and Wastewaters 18th Ed
EPA denota un método del U S Environmental Protection Agency del documento EPA 600/4 79 020 Methods for the Chemical Analysis of Water and Wastes
N D significa no detectable al nivel de detección indicado
El Informe de Control de Calidad les será proporcionado a su solicitud

Av La Marina 3059 San Miguel - Lima 32 - PERU Telefax. 4520635 Telf 4515947 Fax 4641964

46

ENVIROLAB - PERU
Environmental Laboratories Peru S.A.

DREXEL UNIVERSITY

INFORME DE ENSAYO

Nº 60612

Av La Marina 3059 San Miguel - Uma 32 - PERU Telefax. 4520635 Telf 4515947 Fax 4641964

ENVIROLAB - PERU

ENVIRONMENTAL LABORATORIES PERU S A
Av La Marina 3059 SAN MIGUEL

CADENA DE CUSTODIA

Solicitud de Servicios Analíticos

Cliente: Universidad Católica Contacto: Dr Dennis Dirección:

Programa / Sitio: Telefono: Día de Entrega:

Fecha / Numero de Solicitud: 96/06/13 60612

Muestreado por: Fecha:

Identificación de Muestra	Hora	Tipo de Muestra	Nº de Envases	Preserv	# de Laboratorio	pH	METALES	SULFATO	NITRATO	Dureza Total	Alcalinidad Total								Otras Observaciones
						Análisis Requeridos								Para uso de Análisis de Campo					
UW-1			01		60612 -01	-	x	-	-	-	-								
UWS-2			02		-02	x	x	x	x	x	x								
UWS-3			02		-03	x	x	x	x	x	x								
UWS-4			01		-04	-	x	-	-	-	-								
JWS-1			02		-05	x	x	x	x	x	x								Duplicado
JWS-2			02		-06	x	x	x	x	x	x								
JWS-3			02		-07	x	x	x	x	x	x								
JWS-4			02		-08	x	x	x	x	x	x								Duplicado
JWS 5			02		-09	x	x	x	x	x	x								

Condición y Temperatura a la llegada:

Comentario: Metales (Plomo / Zinc / Fe / Manganeso / Cobre / Cadmio / Cromo / Antimonio / Arsenico

Entregado por: Representante de: Día / Hora:

Entregado por: Representante de: Día / Hora:

Entregado por: Representante de: Recibido en Lab por: Día / Hora: 96/06/13

48

ENVIROLAB - PERU

Environmental Laboratories Peru S.A.

INFORME DE ENSAYO N°
60612

Solicitante DREXEL UNIVERSITY

Domicilio legal 3141 Chestnut Street
Philadelphia, Pennsylvania 19104

Tipo de muestra Agua

Identificacion

Fecha de Ingreso 96/06/13

Codigo ENVIROLAB - PERU 60612

Referencia Mr Dennis G Grubb / Josep B Martin

Analisis Sulfato **Método** EPA 375 4

Código de laboratorio	Descripción de muestra	Fecha de Muestreo	Límite de detección	Resultado	Unidad	Fecha de Análisis
60612-02	UWS-2	*	0 5	1860	mg/L	96/06/21
60612-03	UWS-3	*	0 5	976	mg/L	96/06/21
60612-05	JWS-1	*	0 5	976	mg/L	96/06/21
60612-06	JWS-2	*	0 5	617	mg/L	96/06/21
60612-07	JWS-3	*	0 5	1065	mg/L	96/06/21
60612-08	JWS-4	*	0 5	2062	mg/L	96/06/21
60612-09	JWS-5	*	0 5	42	mg/L	96/06/21
60612-10	JWS-6	*	0 5	3271	mg/L	96/06/21
60612-11	UWS-X	*	0 5	942	mg/L	96/06/21

***

* Semana del 03 de junio 1996

LUIS BUENO CARBAJAL
Gerente General
C I P N° 6618
Lima Peru 3/07/96

Los resultados presentados corresponden solo a la muestra indicada
Esta prohibido la reproducción parcial o total del presente documento salvo autorización de Envirolab Peru
SM denota un método de Standard Methods for the Examination of Water and Wastewaters 18th Ed
EPA denota un método del U S Environmental Protection Agency del documento EPA 600/4 79 020 Methods for the Chemical Analysis of Water and Wastes
N D significa no detectable al nivel de detección indicado
El Informe de Control de Calidad les será proporcionado a su solicitud

Av La Marina 3059 San Miguel - Lima 32 - PERU Telefax. 4520635 Telf 4515947 Fax 4641964

ENVIROLAB - PERU

Environmental Laboratories Peru S.A.

INFORME DE ENSAYO Nº 60612

Solicitante DREXEL UNIVERSITY

Domicilio legal 3141 Chestnut Street
Philadelphia, Pennsylvania 19104

Tipo de muestra Agua

Identificacion

Fecha de Ingreso 96/06/13

Codigo ENVIROLAB - PERU 60612

Referencia Mr Dennis G Grubb / Josep B Martin

Analisis N-Nitrato **Metodo** EPA 352 1

Código de laboratorio	Descripción de muestra	Fecha de Muestreo	Límite de detección	Resultado	Unidad	Fecha de Análisis
60612-02	UWS-2	*	0 01	9 30	mg/L	96/06/21
60612-03	UWS-3	*	0 01	4 54	mg/L	96/06/21
60612-05	JWS-1	*	0 01	6 21	mg/L	96/06/21
60612-06	JWS-2	*	0 01	0 13	mg/L	96/06/20
60612-07	JWS-3	*	0 01	3 55	mg/L	96/06/21
60612-08	JWS-4	*	0 01	0 46	mg/L	96/06/20
60612-09	JWS-5	*	0 01	0 81	mg/L	96/06/20
60612-10	JWS-6	*	0 01	0 40	mg/L	96/06/20
60612-11	UWS-X	*	0 01	7 30	mg/L	96/06/21

***

* Semana del 03 de junio 1996

LUIS BUENO CARBAJAL
Gerente General
C I P Nº 6618
Lima, Peru, 3/07/96

Los resultados presentados corresponden solo a la muestra indicada
Esta prohibido la reproduccion parcial o total del presente documento salvo autorización de Envirolab Peru
SM denota un método de Standard Methods for the Examination of Water and Wastewaters 18th Ed
EPA denota un método del U S Environmental Protection Agency del documento EPA 600/4 79 020 Methods for the Chemical Analysis of Water and Wastes
N D significa no detectable al nivel de detección indicado
El Informe de Control de Calidad les será proporcionado a su solicitud

Av La Marina 3059 San Miguel - Lima 32 - PERU Telefax 4520635 Telf 4515947 Fax 4641964

50

ENVIROLAB - PERU

Environmental Laboratories Peru S.A.

INFORME DE ENSAYO N°
60612

Solicitante DREXEL UNIVERSITY

Domicilio legal 3141 Chestnut Street
Philadelphia, Pennsylvania 19104

Tipo de muestra Agua

Identificacion

Fecha de Ingreso 96/06/13

Codigo ENVIROLAB - PERU 60612

Referencia Mr Dennis G Grubb / Josep B Martin

Analisis Dureza Total **Método** EPA 130 2

Código de laboratorio	Descripción de muestra	Fecha de Muestreo	Límite de detección	Resultado	Unidad	Fecha de Análisis
60612-02	UWS-2	*	0 1	2288	mg/L	96/06/24
60612-03	UWS-3	*	0 1	1970	mg/L	96/06/24
60612-05	JWS-1	*	0 1	1019	mg/L	96/06/24
60612-06	JWS-2	*	0 1	1114	mg/L	96/06/24
60612-07	JWS-3	*	0 1	527	mg/L	96/06/24
60612-08	JWS-4	*	0 1	868	mg/L	96/06/24
60612-09	JWS-5	*	0 1	328	mg/L	96/06/24
60612-10	JWS-6	*	0 1	263	mg/L	96/06/24
60612-11	UWS-X	*	0 1	1174	mg/L	96/06/24

***

* Semana del 03 de junio 1996

LUIS BUENO CARBAJAL
Gerente General
C I P N° 6618

Lima, Peru 3/07/96

Los resultados presentados corresponden solo a la muestra indicada
Esta prohibido la reproducción parcial o total del presente documento salvo autorización de Envirolab Peru
' SM denota un método de "Standard Methods for the Examination of Water and Wastewaters 18th Ed
' EPA denota un método del U S Environmental Protection Agency del documento EPA 600/4 79 020
Methods for the Chemical Analysis of Water and Wastes
N D significa no detectable al nivel de detección indicado
El Informe de Control de Calidad les sera proporcionado a su solicitud

Av La Marina 3059 San Miguel - Lima 32 - PERU Telefax 4520635 Telf 4515947 Fax 4641964

51

ENVIROLAB - PERU

Environmental Laboratories Peru S.A.

INFORME DE ENSAYO Nº 60612

Solicitante DREXEL UNIVERSITY

Domicilio legal 3141 Chestnut Street
Philadelphia, Pennsylvania 19104

Tipo de muestra Agua

Identificacion

Fecha de Ingreso 96/06/13

Codigo ENVIROLAB - PERU 60612

Referencia Mr Dennis G Grubb / Josep B Martin

Analisis Alcalinidad Total **Metodo** SM 2320-B

Código de laboratorio	Descripción de muestra	Fecha de Muestreo	Límite de detección	Resultado	Unidad	Fecha de Análisis
60612-02	UWS-2	*	0 1	8	mg/L	96/06/18
60612-03	UWS-3	*	0 1	24	mg/L	96/06/18
60612-05	JWS-1	*	0 1	ND	mg/L	96/06/18
60612-06	JWS-2	*	0 1	22	mg/L	96/06/18
60612-07	JWS-3	*	0 1	ND	mg/L	96/06/18
60612-08	JWS-4	*	0 1	ND	mg/L	96/06/18
60612-09	JWS-5	*	0 1	183	mg/L	96/06/18
60612-10	JWS-6	*	0 1	ND	mg/L	96/06/18
60612-11	UWS-X	*	0 1	38	mg/L	96/06/18

***

* Semana del 03 de junio 1996

LUIS BUENO CARBAJAL
Gerente General
C I P Nº 6618

Lima, Peru 3/07/96

Los resultados presentados corresponden solo a la muestra indicada
Esta prohibido la reproducción parcial o total del presente documento salvo autorización de Envirolab Peru
SM denota un método de Standard Methods for the Examination of Water and Wastewaters 18th Ed
EPA denota un método del U S Environmental Protection Agency del documento EPA 600/4 79 020 Methods for the Chemical Analysis of Water and Wastes
N D significa no detectable al nivel de detección indicado
El Informe de Control de Calidad les será proporcionado a su solicitud

Av La Marina 3059 San Miguel - Lima 32 - PERU Telefax 4520635 Telf 4515947 Fax 4641964

52

ENVIROLAB - PERU

Environmental Laboratories Peru S.A.

INFORME DE ENSAYO N°
60612

Solicitante DREXEL UNIVERSITY

Domicilio legal 3141 Chestnut Street
Philadelphia, Pennsylvania 19104

Tipo de muestra Agua

Identificacion

Fecha de Ingreso 96/06/13

Codigo ENVIROLAB - PERU 60612

Referencia Mr Dennis G Grubb / Josep B Martin

Analisis Plomo **Metodo** EPA 239 1

Código de laboratorio	Descripción de muestra	Fecha de Muestreo	Límite de detección	Resultado	Unidad	Fecha de Análisis
60612-01	UW-1	*	0 10	ND	mg/L	96/06/17
60612-02	UWS-2	*	0 10	ND	mg/L	96/06/17
60612-03	UWS-3	*	0 10	ND	mg/L	96/06/17
60612-04	UWS-4	*	0 10	ND	mg/L	96/06/17
60612-05	JWS-1	*	0 10	0 14	mg/L	96/06/17
60612-06	JWS-2	*	0 10	0 25	mg/L	96/06/17
60612-07	JWS-3	*	0 10	0 53	mg/L	96/06/17
60612-08	JWS-4	*	0 10	ND	mg/L	96/06/17
60612-09	JWS-5	*	0 10	ND	mg/L	96/06/17
60612-10	JWS-6	*	0 10	0.21	mg/L	96/06/17

***

* Semana del 03 de junio 1996

LUIS BUENO CARBAJAL
Gerente General
C I P N° 6618

Lima Peru 3/07/96

Los resultados presentados corresponden solo a la muestra indicada.
Esta prohibido la reproducción parcial o total del presente documento salvo autorización de Envirolab Peru
SM denota un método de Standard Methods for the Examination of Water and Wastewaters 18th Ed
EPA denota un método del U S Environmental Protection Agency del documento EPA-600/4 79 020 Methods for the Chemical Analysis of Water and Wastes
'N D significa no detectable al nivel de detección indicado
El Informe de Control de Calidad les será proporcionado a su solicitud

Av La Marina 3059 San Miguel - Lima 32 - PERU Telefax 4520635 Telf 4515947 Fax 4641964

53

ENVIROLAB - PERU

Environmental Laboratories Peru S.A.

INFORME DE ENSAYO N°
60612

Solicitante DREXEL UNIVERSITY

Domicilio legal 3141 Chestnut Street
Philadelphia, Pennsylvania 19104

Tipo de muestra Agua

Identificacion

Fecha de Ingreso 96/06/13

Codigo ENVIROLAB - PERU 60612

Referencia Mr Dennis G Grubb / Josep B Martin

Analisis Zinc **Método** EPA 289 1

Código de laboratorio	Descripción de muestra	Fecha de Muestreo	Límite de detección	Resultado	Unidad	Fecha de Análisis
60612-01	UW-1	*	0 05	1 40	mg/L	96/06/17
60612-02	UWS-2	*	0 05	3 60	mg/L	96/06/17
60612-03	UWS-3	*	0 05	ND	mg/L	96/06/17
60612-04	UWS-4	*	0 05	0 05	mg/L	96/06/17
60612-05	JWS-1	*	0 05	6 65	mg/L	96/06/17
60612-06	JWS-2	*	0 05	0 60	mg/L	96/06/17
60612-07	JWS-3	*	0 05	45 5	mg/L	96/06/17
60612-08	JWS-4	*	0 05	52 5	mg/L	96/06/17
60612-09	JWS-5	*	0 05	0 82	mg/L	96/06/17
60612-10	JWS-6	*	0 05	51 5	mg/L	96/06/17

***

* Semana del 03 de junio 1996

LUIS BUENO CARBAJAL
Gerente General
C I P N° 6618

Lima, Peru 3/07/96

Los resultados presentados corresponden solo a la muestra indicada
Esta prohibido la reproducción parcial o total del presente documento salvo autorización de Envirolab Peru
SM denota un método de "Standard Methods for the Examination of Water and Wastewaters 18th Ed
EPA denota un método del U S Environmental Protection Agency del documento EPA 600/4 79 020 Methods for the Chemical Analysis of Water and Wastes
'N D significa no detectable al nivel de detección indicado
El Informe de Control de Calidad les será proporcionado a su solicitud

Av La Marina 3059 San Miguel - Lima 32 - PERU Telefax 4520635 Telf 4515947 Fax 4641964

54

ENVIROLAB - PERU

Environmental Laboratories Peru S.A.

INFORME DE ENSAYO N°
60612

Solicitante DREXEL UNIVERSITY

Domicilio legal 3141 Chestnut Street
Philadelphia, Pennsylvania 19104

Tipo de muestra Agua

Identificacion

Fecha de Ingreso 96/06/13

Codigo ENVIROLAB - PERU 60612

Referencia Mr Dennis G Grubb / Josep B Martin

Análisis Fierro **Método** EPA 236 1

Código de laboratorio	Descripción de muestra	Fecha de Muestreo	Límite de detección	Resultado	Unidad	Fecha de Análisis
60612-01	UW-1	*	0 20	3 25	mg/L	96/06/17
60612-02	UWS-2	*	0 20	6 15	mg/L	96/06/17
60612-03	UWS-3	*	0 20	ND	mg/L	96/06/17
60612-04	UWS-4	*	0 20	ND	mg/L	96/06/17
60612-05	JWS-1	*	0 20	195 0	mg/L	96/06/17
60612-06	JWS-2	*	0 20	0 86	mg/L	96/06/17
60612-07	JWS-3	*	0 20	550 0	mg/L	96/06/17
60612-08	JWS-4	*	0 20	7 15	mg/L	96/06/17
60612-09	JWS-5	*	0 20	1 67	mg/L	96/06/17
60612-10	JWS-6	*	0 20	1750 0	mg/L	96/06/17

***

* Semana del 03 de junio 1996

LUIS BUENO CARBAJAL
Gerente General
C I P N° 6618
Lima Peru 3/07/96

Los resultados presentados corresponden solo a la muestra indicada
Esta prohibido la reproducción parcial o total del presente documento salvo autorización de Envirolab Peru
SM denota un método de Standard Methods for the Examination of Water and Wastewaters 18th Ed
EPA denota un método del U S Environmental Protection Agency del documento EPA 600/4 79 020
Methods for the Chemical Analysis of Water and Wastes
N D ' significa no detectable al nivel de detección indicado
El Informe de Control de Calidad les será proporcionado a su solicitud

Av La Marina 3059 San Miguel - Lima 32 - PERU Telefax. 4520635 Telf 4515947 Fax 4641964

55

ENVIROLAB - PERU

Environmental Laboratories Peru S.A.

INFORME DE ENSAYO N°
60612

Solicitante DREXEL UNIVERSITY

Domicilio legal 3141 Chestnut Street
Philadelphia, Pennsylvania 19104

Tipo de muestra Agua

Identificacion

Fecha de Ingreso 96/06/13

Codigo ENVIROLAB - PERU 60612

Referencia Mr Dennis G Grubb / Josep B Martin

Analisis Manganeso **Método** EPA 243 1

Código de laboratorio	Descripción de muestra	Fecha de Muestreo	Límite de detección	Resultado	Unidad	Fecha de Análisis
60612-01	UW-1	*	0 02	372 5	mg/L	96/06/17
60612-02	UWS-2	*	0 02	700 0	mg/L	96/06/17
60612-03	UWS-3	*	0 02	52 0	mg/L	96/06/17
60612-04	UWS-4	*	0 02	80 0	mg/L	96/06/17
60612-05	JWS-1	*	0 02	50 0	mg/L	96/06/17
60612-06	JWS-2	*	0 02	2 75	mg/L	96/06/17
60612-07	JWS-3	*	0 02	100 0	mg/L	96/06/17
60612-08	JWS-4	*	0 02	214 0	mg/L	96/06/17
60612-09	JWS-5	*	0 02	0 41	mg/L	96/06/17
60612-10	JWS-6	*	0 02	252 5	mg/L	96/06/17

***

* Semana del 03 de junio 1996

LUIS BUENO CARBAJAL
Gerente General
C I P N° 6618

Lima Peru 3/07/96

Los resultados presentados corresponden solo a la muestra indicada
Esta prohibido la reproducción parcial o total del presente documento salvo autorización de Envirolab Peru
SM denota un método de Standard Methods for the Examination of Water and Wastewaters 18th Ed
EPA denota un método del U S Environmental Protection Agency del documento EPA 600/4 79 020 Methods for the Chemical Analysis of Water and Wastes
N D significa no detectable al nivel de detección indicado
El Informe de Control de Calidad les será proporcionado a su solicitud

Av La Marina 3059 San Miguel - Lima 32 - PERU Telefax. 4520635 Telf 4515947 Fax 4641964

56

ENVIROLAB - PERU

Environmental Laboratories Peru S.A.

INFORME DE ENSAYO Nº 60612

Solicitante DREXEL UNIVERSITY

Domicilio legal 3141 Chestnut Street
Philadelphia, Pennsylvania 19104

Tipo de muestra Agua

Identificacion

Fecha de Ingreso 96/06/13

Codigo ENVIROLAB - PERU 60612

Referencia Mr Dennis G Grubb / Josep B Martin

Analisis Cobre **Metodo** EPA 220 1

Código de laboratorio	Descripción de muestra	Fecha de Muestreo	Límite de detección	Resultado	Unidad	Fecha de Análisis
60612-01	UW-1	*	0 04	ND	mg/L	96/06/17
60612-02	UWS-2	*	0 04	0 04	mg/L	96/06/17
60612-03	UWS-3	*	0 04	ND	mg/L	96/06/17
60612-04	UWS-4	*	0 04	ND	mg/L	96/06/17
60612-05	JWS-1	*	0 04	0 23	mg/L	96/06/17
60612-06	JWS-2	*	0 04	0 11	mg/L	96/06/17
60612-07	JWS-3	*	0 04	30 0	mg/L	96/06/17
60612-08	JWS-4	*	0 04	44 5	mg/L	96/06/17
60612-09	JWS-5	*	0 04	0 06	mg/L	96/06/17
60612-10	JWS-6	*	0 04	4 5	mg/L	96/06/17

***

* Semana del 03 de junio 1996

LUIS BUENO CARBAJAL
Gerente General
C I P Nº 6618

Lima Peru, 3/07/96

Los resultados presentados corresponden solo a la muestra indicada
Esta prohibido la reproducción parcial o total del presente documento salvo autorizacion de Envirolab Peru
SM denota un método de Standard Methods for the Examination of Water and Wastewaters 18th Ed
EPA denota un método del U S Environmental Protection Agency del documento EPA 600/4 79 020 Methods for the Chemical Analysis of Water and Wastes
N D significa no detectable al nivel de deteccion indicado
El Informe de Control de Calidad les será proporcionado a su solicitud

Av La Marina 3059 San Miguel - Lima 32 - PERU Telefax 4520635 Telf 4515947 Fax 4641964

51

ENVIROLAB - PERU

Environmental Laboratories Peru S.A.

INFORME DE ENSAYO N°
60612

Solicitante DREXEL UNIVERSITY

Domicilio legal 3141 Chestnut Street
Philadelphia, Pennsylvania 19104

Tipo de muestra Agua
Identificacion
Fecha de Ingreso 96/06/13
Codigo ENVIROLAB - PERU 60612
Referencia Mr Dennis G Grubb / Josep B Martin

Analisis Cadmio **Método** EPA 213 1

Código de laboratorio	Descripción de muestra	Fecha de Muestreo	Límite de detección	Resultado	Unidad	Fecha de Análisis
60612-01	UW-1	*	0 01	ND	mg/L	96/06/17
60612-02	UWS-2	*	0 01	ND	mg/L	96/06/17
60612-03	UWS-3	*	0 01	ND	mg/L	96/06/17
60612-04	UWS-4	*	0 01	ND	mg/L	96/06/17
60612-05	JWS-1	*	0 01	ND	mg/L	96/06/17
60612-06	JWS-2	*	0 01	ND	mg/L	96/06/17
60612-07	JWS-3	*	0 01	0 23	mg/L	96/06/17
60612-08	JWS-4	*	0 01	0 26	mg/L	96/06/17
60612-09	JWS-5	*	0 01	ND	mg/L	96/06/17
60612-10	JWS-6	*	0 01	0 09	mg/L	96/06/17

***

* Semana del 03 de junio 1996

LUIS BUENO CARBAJAL
Gerente General
C I P N° 6618

Lima Peru, 3/07/96

Los resultados presentados corresponden solo a la muestra indicada
Esta prohibido la reproducción parcial o total del presente documento salvo autorización de Envirolab Peru
SM denota un método de "Standard Methods for the Examination of Water and Wastewaters 18th Ed
EPA denota un método del U S Environmental Protection Agency del documento EPA 600/4 79 020 Methods for the Chemical Analysis of Water and Wastes
N D significa no detectable al nivel de detección indicado
El Informe de Control de Calidad les será proporcionado a su solicitud

Av La Marina 3059 San Miguel - Lima 32 - PERU Telefax 4520635 Telf 4515947 Fax 4641964

58

ENVIROLAB - PERU

Environmental Laboratories Peru S.A.

INFORME DE ENSAYO Nº 60612

Solicitante DREXEL UNIVERSITY

Domicilio legal 3141 Chestnut Street
Philadelphia, Pennsylvania 19104

Tipo de muestra Agua

Identificacion

Fecha de Ingreso 96/06/13

Codigo ENVIROLAB - PERU 60612

Referencia Mr Dennis G Grubb / Josep B Martin

Analisis Cromo **Metodo** EPA 218 1

Código de laboratorio	Descripción de muestra	Fecha de Muestreo	Límite de detección	Resultado	Unidad	Fecha de Análisis
60612-01	UW-1	*	0 02	ND	mg/L	96/06/17
60612-02	UWS-2	*	0 02	ND	mg/L	96/06/17
60612-03	UWS-3	*	0 02	ND	mg/L	96/06/17
60612-04	UWS-4	*	0 02	ND	mg/L	96/06/17
60612-05	JWS-1	*	0 02	ND	mg/L	96/06/17
60612-06	JWS-2	*	0 02	ND	mg/L	96/06/17
60612-07	JWS-3	*	0 02	ND	mg/L	96/06/17
60612-08	JWS-4	*	0 02	ND	mg/L	96/06/17
60612-09	JWS-5	*	0 02	ND	mg/L	96/06/17
60612-10	JWS-6	*	0 02	ND	mg/L	96/06/17

***

* Semana del 03 de junio 1996

LUIS BUENO CARBAJAL
Gerente General
C I P Nº 6618

Lima Peru 3/07/96

Los resultados presentados corresponden solo a la muestra indicada
Esta prohibido la reproducción parcial o total del presente documento salvo autorizacion de Envirolab - Peru
SM denota un método de "Standard Methods for the Examination of Water and Wastewaters 18th Ed
EPA denota un método del U S Environmental Protection Agency del documento EPA 600/4-79 020 Methods for the Chemical Analysis of Water and Wastes
N D significa no detectable al nivel de detección indicado
El Informe de Control de Calidad les será proporcionado a su solicitud

Av La Marina 3059 San Miguel - Lima 32 - PERU Telefax 4520635 Telf 4515947 Fax 4641964

59

ENVIROLAB - PERU

Environmental Laboratories Peru S.A.

INFORME DE ENSAYO N°
60612

Solicitante DREXEL UNIVERSITY

Domicilio legal 3141 Chestnut Street
Philadelphia, Pennsylvania 19104

Tipo de muestra Agua

Identificacion

Fecha de Ingreso 96/06/13

Codigo ENVIROLAB - PERU 60612

Referencia Mr Dennis G Grubb / Josep B Martin

Analisis Antimonio **Metodo** EPA 204 1

Código de laboratorio	Descripción de muestra	Fecha de Muestreo	Límite de detección	Resultado	Unidad	Fecha de Análisis
60612-01	UW-1	*	0 20	ND	mg/L	96/06/17
60612-02	UWS-2	*	0 20	ND	mg/L	96/06/17
60612-03	UWS-3	*	0 20	ND	mg/L	96/06/17
60612-04	UWS-4	*	0 20	ND	mg/L	96/06/17
60612-05	JWS-1	*	0 20	ND	mg/L	96/06/17
60612-06	JWS-2	*	0 20	ND	mg/L	96/06/17
60612-07	JWS-3	*	0 20	ND	mg/L	96/06/17
60612-08	JWS-4	*	0 20	ND	mg/L	96/06/17
60612-09	JWS-5	*	0 20	ND	mg/L	96/06/17
60612-10	JWS-6	*	0 20	ND	mg/L	96/06/17

***

* Semana del 03 de junio 1996

LUIS BUENO CARBAJAL
Gerente General
C I P N° 6618

Lima, Peru, 3/07/96

Los resultados presentados corresponden solo a la muestra indicada
Esta prohibido la reproducción parcial o total del presente documento salvo autorizacion de Envirolab Peru
SM denota un método de "Standard Methods for the Examination of Water and Wastewaters 18th Ed
EPA denota un método del U S Environmental Protection Agency del documento EPA 600/4 79 020 Methods for the Chemical Analysis of Water and Wastes
N D significa no detectable al nivel de detección indicado
El Informe de Control de Calidad les será proporcionado a su solicitud

Av La Marina 3059 San Miguel - Lima 32 - PERU Telefax. 4520635 Telf 4515947 Fax 4641964

60

ENVIROLAB - PERU

Environmental Laboratories Peru S.A.

INFORME DE ENSAYO N°
60612

Solicitante DREXEL UNIVERSITY

Domicilio legal 3141 Chestnut Street
Philadelphia Pennsylvania 19104

Tipo de muestra Agua
Identificacion
Fecha de Ingreso 96/06/13
Codigo ENVIROLAB - PERU 60612
Referencia Mr Dennis G Grubb / Josep B Martin

Analisis Arsénico **Método** EPA 206 4

Código de laboratorio	Descripción de muestra	Fecha de Muestreo	Límite de detección	Resultado	Unidad	Fecha de Análisis
60612-01	UW-1	*	0 05	ND	mg/L	96/06/18
60612-02	UWS-2	*	0 05	0 14	mg/L	96/06/18
60612-03	UWS-3	*	0 05	0 19	mg/L	96/06/18
60612-04	UWS-4	*	0 05	ND	mg/L	96/06/18
60612-05	JWS-1	*	0 05	0 24	mg/L	96/06/18
60612-06	JWS-2	*	0 05	0 08	mg/L	96/06/18
60612-07	JWS-3	*	0 05	7 45	mg/L	96/06/18
60612-08	JWS-4	*	0 05	2 75	mg/L	96/06/18
60612-09	JWS-5	*	0 05	0 05	mg/L	96/06/18
60612-10	JWS-6	*	0 05	0 88	mg/L	96/06/18

***

* Semana del 03 de junio 1996

LUIS BUENO CARBAJAL
Gerente General
C I P N° 6618

Lima, Peru 3/07/96

Los resultados presentados corresponden solo a la muestra indicada
Esta prohibido la reproduccion parcial o total del presente documento salvo autorización de Envirolab Peru
SM denota un método de "Standard Methods for the Examination of Water and Wastewaters 18th Ed
EPA denota un método del U S Environmental Protection Agency del documento EPA-600/4-79 020 Methods for the Chemical Analysis of Water and Wastes
N D significa no detectable al nivel de deteccion indicado
El Informe de Control de Calidad les será proporcionado a su solicitud

Av La Marina 3059 San Miguel - Lima 32 - PERU Telefax 4520635 Telf 4515947 Fax 4641964

61

ENVIROLAB - PERU

Environmental Laboratories Peru S.A.

INFORME DE CONTROL DE CALIDAD N°
60612

Solicitante DREXEL UNIVERSITY

Domicilio legal 3141 Chestnut Street
Philadelphia, Pennsylvania 19104

Tipo de muestra Agua

Identificacion

Fecha de Ingreso 96/06/13

Codigo ENVIROLAB PERU 60612

Referencia Mr Dennis G Grubb / Josep B Martin

Analisis	pH	Sulfato	Nitrato (como N)
Método	EPA 150 1	EPA 375 4	EPA 352 1
Fecha	96/06/14	96/06/21	96/06/20
Grupo de control	QC 960614	QC 960615	QC 960620
Identificación de Equipo	Electrométrico	Turbidimétrico	Colorimétrico
Cantidad Añadida	Duplicado	20	0 3
Unidad	—	mg/L	mg/L
Identificación de Blanco	—	BLC 960621	BLC 960620
Concentración	—	<0 5	< 0 01
Muestra Adicionada	60612 02	BLC 960615 ADI	STD 960620
% de recuperación	4 26	91 6	104 98
% de recuperación (dup)	4 3	91 6	103 95
% de desviación relativa	0 93	0 46	0 99
Muestra de Control Numero	—	STD 960615	—
% de Recuperación	—	92 02	—
Limites de Aceptación			
Exactitud (% R)	—	85 - 115 %	85 - 115%
Precisión (%PRD)	0 - 1 %	0 - 15 %	0 15 %

LUIS BUENO CARBAJAL
Gerente General
C I P N° 6618

Lima Peru, 3/07/96

El BLANCO pasa por todos los pasos del analisis como indicador de contaminación
El % DE RECUPERACION (%R) mide la exactitud del análisis y el % RELATIVO DE DESVIACION (%PRD) mide la precisión del análisis y debe encontrarse dentro de los limites indicados
Diluciones y otras dificultades analíticas pueden causar que no se pueda obtener datos de exactitud y precisión Si esto ocurre la MUESTRA DE CONTROL, una adición conocida a agua de análisis que se analiza conjuntamente con el grupo es una medida aceptable de recuperación

Av La Marina 3059 San Miguel - Lima 32 - PERU Telefax 4520635 Telf 4515947 Fax 4641964

62

INFORME DE CONTROL DE CALIDAD N°
60612

Solicitante	DREXEL UNIVERSITY
Domicilio legal	3141 Chestnut Street Philadelphia, Pennsylvania 19104
Tipo de muestra	Agua
Identificacion	
Fecha de Ingreso	96/06/13
Codigo ENVIROLAB PERU	60612
Referencia	Mr Dennis G Grubb / Josep B Martin

Analisis	**Alcalinidad Total**
Método	SM 2320 B
Fecha	96/06/18
Grupo de control	QC 960618
Identificación de Equipo	Volumetrico
Cantidad Añadida	Duplicado
Unidad	mg/L
Identificación de Blanco	BLC 960618
Concentración	< 0 1
Muestra Adicionada	60612-11
% de recuperación	38
% de recuperación (dup)	38
% de desviación relativa	0
Muestra de Control Numero	—
% de Recuperación	—
Límites de Aceptación	
Exactitud (% R)	—
Precisión (%PRD)	0 - 1 %

LUIS BUENO CARBAJAL
Gerente General
C I P N° 6618

Lima, Peru, 3/07/96

El BLANCO pasa por todos los pasos del análisis como indicador de contaminacion
El % DE RECUPERACION (%R) mide la exactitud del análisis y el % RELATIVO DE DESVIACION (%PRD) mide la precisión del análisis y debe encontrarse dentro de los limites indicados
Diluciones y otras dificultades analiticas pueden causar que no se pueda obtener datos de exactitud y precisión Si esto ocurre la MUESTRA DE CONTROL una adición conocida a agua de análisis que se analiza conjuntamente con el grupo es una medida aceptable de recuperacion

Av La Marina 3059 San Miguel - Lima 32 - PERU Telefax 4520635 Telf 4515947 Fax 4641964

63

ENVIROLAB - PERU

Environmental Laboratories Peru S.A.

INFORME DE CONTROL DE CALIDAD N°
60612

Solicitante DREXEL UNIVERSITY

Domicilio legal 3141 Chestnut Street
Philadelphia, Pennsylvania 19104

Tipo de muestra Agua

Identificacion

Fecha de Ingreso 96/06/13

Codigo ENVIROLAB PERU 60612

Referencia Mr Dennis G Grubb / Josep B Martin

Analisis	Plomo	Zinc	Fierro
Método	EPA 239 1	EPA 289 1	EPA 236 1
Fecha	96/06/17	96/06/17	96/06/17
Grupo de control	QC 960617	QC 960617	QC 960617
Identificación de Equipo	A A	A A	A A
Cantidad Añadida	1 0	1 0	1 0
Unidad	ug/ml	ug/ml	ug/ml
Identificación de Blanco	BL 960617	BL 960617	BL 960617
Concentración	< 0 10	< 0 05	< 0 20
Muestra Adicionada	BL 960617	BL 960617	BL 960617
% de recuperación	100 0	103 0	110 0
% de recuperacion (dup)	100 0	105 0	108 0
% de desviación relativa	0 0	1 92	1 83
Muestra de Control Numero	MC 960617	MC 960617	MC 960617
% de Recuperación	100 0	102 0	108 0
Límites de Aceptación			
Exactitud (% R)	87 - 122 %	90 - 111 %	89 - 112 %
Precisión (%PRD)	0 - 9 2 %	0 - 5 5 %	0 - 6 1 %

LUIS BUENO CARBAJAL
Gerente General
C I P N° 6618

Lima Peru 3/07/96

El BLANCO pasa por todos los pasos del análisis como indicador de contaminacion
El % DE RECUPERACION (%R) mide la exactitud del análisis y el % RELATIVO DE DESVIACION (%PRD) mide la precision del análisis y debe encontrarse dentro de los límites indicados
Diluciones y otras dificultades analiticas pueden causar que no se pueda obtener datos de exactitud y precision Si esto ocurre la MUESTRA DE CONTROL una adicion conocida a agua de análisis que se analiza conjuntamente con el grupo es una medida aceptable de recuperacion

Av La Marina 3059 San Miguel - Lima 32 - PERU Telefax 4520635 Telf 4515947 Fax 4641964

64

ENVIROLAB - PERU

Environmental Laboratories Peru S.A.

INFORME DE CONTROL DE CALIDAD N°
60612

Solicitante DREXEL UNIVERSITY

Domicilio legal 3141 Chestnut Street
Philadelphia Pennsylvania 19104

Tipo de muestra Agua
Identificacion
Fecha de Ingreso 96/06/13
Codigo ENVIROLAB PERU 60612
Referencia Mr Dennis G Grubb / Josep B Martin

Analisis	Manganeso	Cobre	Cadmio
Método	EPA 243 1	EPA 220 1	EPA 213 1
Fecha	96/06/17	96/06/17	96/06/17
Grupo de control	QC 960617	QC 960617	QC 960617
Identificación de Equipo	A A	A A	A A
Cantidad Añadida	1 0	1 0	1 0
Unidad	ug/ml	ug/ml	ug/ml
Identificación de Blanco	BL 960617	BL 960617	BL 960617
Concentración	< 0 02	< 0 04	< 0 01
Muestra Adicionada	BL 960617	BL 960617	BL 960617
% de recuperación	102 0	101 0	101 0
% de recuperación (dup)	103 0	103 0	102 0
% de desviación relativa	0 98	1 96	0 98
Muestra de Control Numero	MC 960617	MC 960617	MC 960617
% de Recuperación	100 0	100 0	100 0
Límites de Aceptación			
Exactitud (% R)	90 - 107 %	87 - 111 %	77 - 124 %
Precisión (%PRD)	0 4 7 %	0 - 6 5 %	0 13 6 %

LUIS BUENO CARBAJAL
Gerente General
C I P N° 6618

Environmental Laboratories Peru S.A. LIMA

Lima, Peru, 3/07/96

El BLANCO pasa por todos los pasos del análisis como indicador de contaminacion.
El % DE RECUPERACION (%R) mide la exactitud del analisis y el % RELATIVO DE DESVIACION (%PRD) mide la precisión del análisis y debe encontrarse dentro de los limites indicados
Diluciones y otras dificultades analíticas pueden causar que no se pueda obtener datos de exactitud y precision Si esto ocurre la MUESTRA DE CONTROL una adicion conocida a agua de analisis que se analiza conjuntamente con el grupo es una medida aceptable de recuperacion

Av La Marina 3059 San Miguel - Lima 32 - PERU Telefax. 4520635 Telf 4515947 Fax 4641964

65

ENVIROLAB - PERU

Environmental Laboratories Peru S.A.

INFORME DE CONTROL DE CALIDAD N°
60612

Solicitante DREXEL UNIVERSITY

Domicilio legal 3141 Chestnut Street
Philadelphia, Pennsylvania 19104

Tipo de muestra Agua

Identificacion

Fecha de Ingreso 96/06/13

Codigo ENVIROLAB PERU 60612

Referencia Mr Dennis G Grubb / Josep B Martin

Análisis	Cromo	Antimonio	Arsénico
Método	EPA 218 1	EPA 204 1	EPA 206 4
Fecha	96/06/17	96/06/17	96/06/17
Grupo de control	QC 960617	QC 960617	QC 960617
Identificación de Equipo	A A	A A	A A
Cantidad Añadida	1 0	1 0	2 0
Unidad	ug/ml	ug/ml	ug/ml
Identificación de Blanco	BLC 960617	BLC 960617	BLC 960617
Concentración	< 0 02	< 0 20	< 0 05
Muestra Adicionada	BL 960617	BL 960617	BL 960617
% de recuperación	110	100	95
% de recuperación (dup)	110	100	90
% de desviación relativa	0	0	5 41
Muestra de Control Numero	MC 960617	MC 960617	MC 960617
% de Recuperación	100	100	90
Límites de Aceptación			
Exactitud (% R)	88 - 113 %	57 90 %	70 108 %
Precisión (%PRD)	0 - 6 7 %	0 - 12 9 %	0 - 13 5 %

LUIS BUENO CARBAJAL
Gerente General
C I P N° 6618

Lima, Peru 3/07/96

El BLANCO pasa por todos los pasos del análisis como indicador de contaminación
El % DE RECUPERACION (%R) mide la exactitud del análisis y el % RELATIVO DE DESVIACION (%PRD) mide la precisión del análisis y debe encontrarse dentro de los limites indicados
Diluciones y otras dificultades analiticas pueden causar que no se pueda obtener datos de exactitud y precision Si esto ocurre la MUESTRA DE CONTROL una adicion conocida a agua de análisis que se analiza conjuntamente con el grupo es una medida aceptable de recuperacion

Av La Marina 3059 San Miguel - Lima 32 - PERU Telefax 4520635 Telf 4515947 Fax 4641964

66