PN-ACD-875

a new small-scale processor for pulses

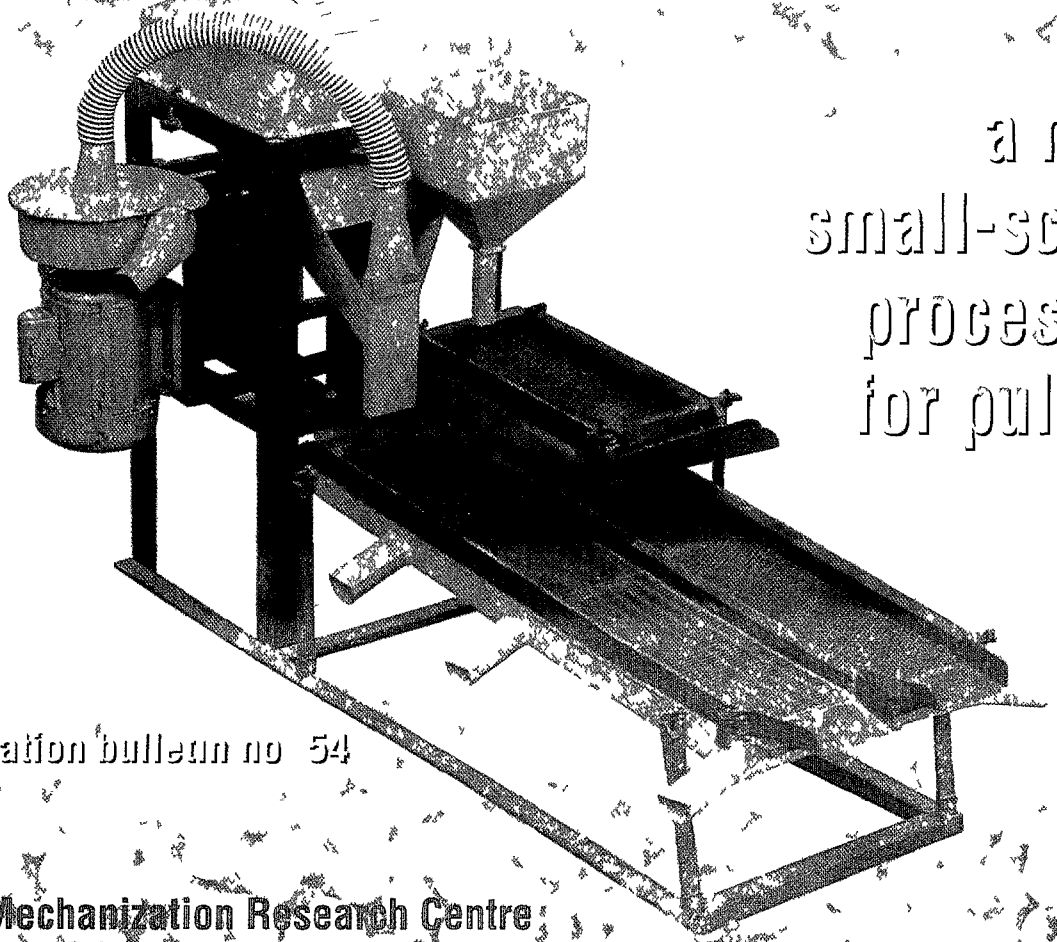

information bulletin no 54

-arm Mechanization Research Centre
International Crops Research Institute for the Semi-Arid Tropics

Citation Nimal Jayantha, H M , and Saxena, K B 1998 A new small-scale processor for pulses (In En Summaries in En, Fr) Information Bulletin no 54 Maha Illuppallama, Sri Lanka Farm Mechanization Research Centre, Department of Agriculture, Ministry of Agriculture and Lands, and Patancheru 502 324, Andhra Pradesh, India International Crops Research Institute for the Semi-Arid Tropics 20 pp ISBN 92-9066-394-4 Order code IBE 054

Abstract

Pigeonpea (*Cajanus cajan* (L) Millsp) is an important protein-rich staple food in several parts of the semi-arid tropics The development of new pigeonpea varieties has helped extend this crop into nontraditional production areas, but the commercial adoption of the crop depends largely on such factors as processing and consumption The availability of an effective small-scale processing technology to dehull pigeonpea grain is critical to successful pigeonpea production and marketing In Sri Lanka, the Department of Agriculture set up a promising pigeonpea production project supported by the Asian Development Bank and ICRISAT Under the project, a small-scale processing machine was developed at the Farm Mechanization Research Centre (FMRC) The machine is capable of producing high-quality decorticated splits (*dhal*) of various pulse crops (black gram, green gram, cowpea, soybean, etc), and can process about 40 kg of pigeonpea grain in 1 h with 70–74% recovery Besides dehulling and splitting, the machine can clean and grade grain or splits This document summarizes important research results and relevant technical information about this processing machine

Resume

Le pois d'Angole (*Cajanus cajan* (L) Millsp) est un aliment de base riche en proteines dans plusieurs parties des zones tropicales semi-arides Le developpement de nouvelles varietes de pois d Angole a permis l extension de sa culture dans des zones de production non-traditionnelles Pourtant l adoption de cette culture a l'echelle commerciale est liee étroitement aux facteurs telles que la transformation et la consommation La disponibilite d une technologie efficace et de petite echelle pour la decortication de graines de pois d'Angole est essentielle pour le succes de la production et la commercialisation de cette culture Au Sri Lanka, le Departement de l Agriculture a mis en place un project de production de pois d'Angole soutenu par la Banque asiatique de developpement (ADB) ainsi que par l'ICRISAT Dans le cadre de ce projet, une machine de traitement a petite echelle a ete mise au point au Farm Mechanization Research Centre (FMRC, Centre de recherche sur le machinisme agricole), a Maha Illuppallama, au Sri Lanka La machine peut decortiquer des legumineuses diverses telles le haricot mungo, le niebe, le soja, etc , pour produire le *dhal* (les graines cassees) de haute qualite Elle peut traiter environ 40 kg de graines de pois d Angole en une heure avec 70–74% de recuperation En plus du decorticage et de la cassure, la machine peut nettoyer et cribler les graines entières/cassees Ce document donne un compte rendu des resultats importants de la recherche, ainsi que les informations techniques utiles sur cette machine

The research activities reported in this bulletin were supported by the Asian Development Bank, the Government of Sri Lanka, and ICRISAT

Cover Whole pigeonpea grain (top) decorticated and split pigeonpea *dhal* (bottom) and the new milling unit developed at the Farm Mechanization Research Centre (FMRC) Sri Lanka

A New Small-Scale Processor for Pulses

H M Nimal Jayantha
K B Saxena

Information Bulletin no 54

Farm Mechanization Research Centre
Department of Agriculture
Ministry of Agriculture and Lands, Maha Illuppallama, Sri Lanka

ICRISAT
International Crops Research Institute for the Semi-Arid Tropics
Patancheru 502 324, Andhra Pradesh, India

1998

About the Authors

H M Nimal Jayantha, Deputy Director (Research), Farm Mechanization Research Centre, Department of Agriculture, Ministry of Agriculture and Lands, Maha Illuppallama, Sri Lanka

K B Saxena, Senior Scientist (Breeding), Genetic Resources Enhancement Program (GREP), International Crops Research Institute for the Semi-Arid Tropics (ICRISAT), Patancheru 502 324, Andhra Pradesh, India

The designations employed and the presentation of the material in this publication do not imply the expression of any opinion whatsoever on the part of ICRISAT or the Department of Agriculture, Sri Lanka, concerning the legal status of any country, territory, city, or area, or of its authorities, or concerning the delimitation of its frontiers or boundaries Where trade names are used this does not constitute endorsement of or discrimination against any product by ICRISAT or by the Department of Agriculture, Sri Lanka

Copyright© 1998 by the International Crops Research Institute for the Semi-Arid Tropics (ICRISAT)

All rights reserved Except for quotations of short passages for the purposes of criticism and review, no part of this publication may be reproduced, stored in retrieval systems, or transmitted, in any form or by any means, electronic, mechanical, photocopying, recording, or otherwise, without prior permission of ICRISAT It is hoped that this Copyright declaration will not diminish the bona fide use of its research findings in agricultural research and development in or for the tropics

Contents

Foreword iv

Introduction 1

The new milling technique 4

Description of the machine 6

Specifications 6

Milling assembly 7

Cleaning and grading assembly 8

Air aspiration assembly 8

Critical adjustments 8

Maintenance and repair 10

Efficiency of the machine 11

Technical and socioeconomic feasibility 11

Handling and operation 11

Safety features 12

Preparation of grain for processing 12

Grain cleaning, drying, and grading 12

Pre-milling grain treatments 12

Processing operations 13

Additional information 14

Acknowledgments 14

References 14

Foreword

Vegetable proteins are important components of both rural and urban Sri Lankan cuisines The Department of Agriculture in Sri Lanka, therefore, places a high priority on the promotion of protein-rich pulse crops The annual production of traditional pulses, however, falls short of the national demand, and in an attempt to significantly increase pulse production in the country, pigeonpea has been identified for cultivation in the dry and intermediate zones Although the crop has been found to grow well in these environments, its adoption has been constrained due to the nonavailability of a suitable pigeonpea processing technology It gives me pleasure to note that the Farm Mechanization Research Centre, in collaboration with the Field Crops Research and Development Institute of the Department of Agriculture, Sri Lanka, has successfully designed and developed a small-scale pulse processing machine under the 'Pigeonpea intercropping and diversification study project supported by the Asian Development Bank (ADB) and the International Crops Research Institute for the Semi-Arid Tropics (ICRISAT) The successful adoption trials of this machine have not only encouraged farmers but also succeeded in generating confidence among the farming community The ability of this machine to produce quality *dhal* from different pulse crops and its affordable cost will enable rapid adoption of the new technology among farmers and small-scale millers/traders I am confident that the development of this processing machine will serve as a gateway for pigeonpea production in Sri Lanka This information bulletin is a commendable effort by the authors in compiling valuable research results and other relevant information about this pulse processing machine I hope that this document, besides disseminating information, will also serve as a useful guide to users of the machine in Sri Lanka and in other countries where small-scale pulse processing is still a production constraint

Sarath Amarasiri
Director General
Department of Agriculture
Ministry of Agriculture and Lands
Sri Lanka

Introduction

Pigeonpea (*Cajanus cajan* (L) Millsp), commonly known as red gram or *tur* in the Indian subcontinent, is an important protein-rich staple food for millions of vegetarians in the region Although India is the largest producer of pigeonpea in the world, this foodgrain is an important pulse crop in countries of eastern Africa and the Caribbean The ability of the crop to survive and yield good economic returns in drought-prone environments and low-input production systems, besides enriching the soil, makes it an attractive option to dryland farmers New short-statured, short-duration, high-yielding varieties developed by the International Crops Research Institute for the Semi-Arid Tropics (ICRISAT) have generated interest in pigeonpea cultivation in such new areas as Indonesia, Myanmar, Philippines, Sri Lanka, Surinam, Thailand, and Trinidad

In Sri Lanka, the staple food is rice, while pulses provide a cheap source of protein which ensures complementary levels of amino acids in the diet Traditionally, such pulses as green gram (*Vigna radiata*), black gram (*Vigna mungo*), and cowpea (*Vigna unguiculata*) have been cultivated in Sri Lanka under subsistence farming systems in the dry and intermediate rainfall zones However, lentil *dhal* (decorticated split peas), that is not grown locally, constitutes a popular diet for a large proportion of the population in the country The entire annual lentil *dhal* requirement (about 40 000 t) is imported

The closest substitute for lentil identified by scientists in Sri Lanka is pigeonpea Local production and processing of pigeonpea could result in substantial foreign exchange savings Further, pigeonpea has much potential in the rainfed uplands due to its wide adaptability and drought tolerance It also thrives under the marginal growing conditions of the island where most other pulses would fail

In the rural areas of Sri Lanka, manually operated stone mills have been used for centuries to process *dhal* from cowpea, and, to a lesser extent, from green gram and black gram (Fig 1) The mills are essentially designed to grind cereal grain into flour, and have no

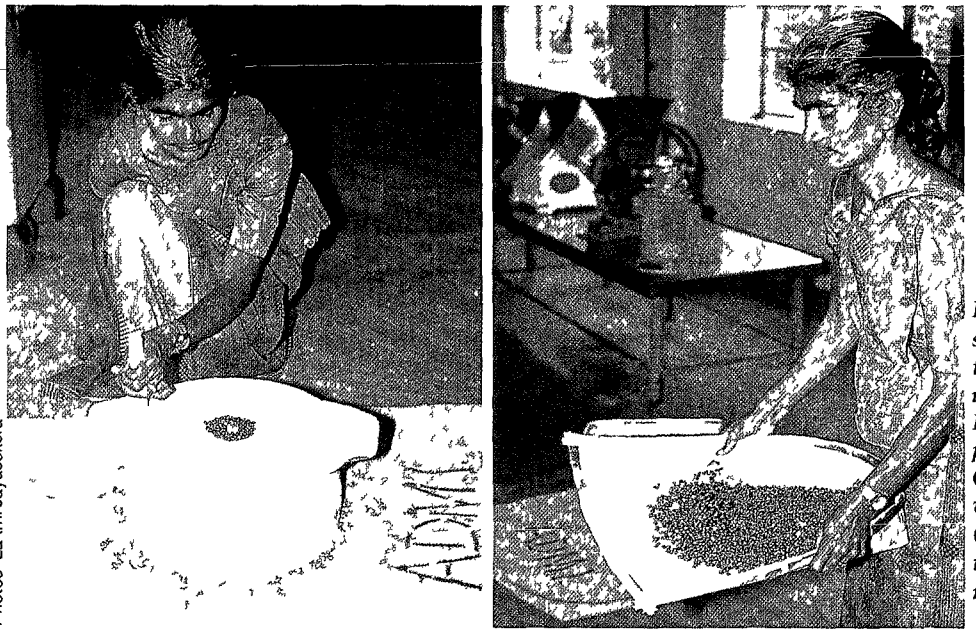

Photos Laxmi Jayasekera

Figure 1 Typical stone mill traditionally used in Sri Lanka to process pulses into dhal (left) Manual winnowing (right) to clean the grain before milling

mechanism to accommodate grains of various sizes for dehulling and splitting Hence these mills are unsuitable for processing pigeonpea for commercial and domestic consumption As a result, processing was identified from the outset as a major bottleneck in introducing pigeonpea to Sri Lanka

In India, almost the entire pigeonpea produce (2 5 million t) is converted into *dhal* by more than 10 000 medium- to large-scale dehulling mills throughout the country At present, there is no small-scale dehulling machine available that is capable of producing high-quality *dhal* During the last few decades, a number of attempts were made by various research organizations and universities in India and Sri Lanka to perfect small-scale pulse processing technology However, the prototypes were not adopted by millers, as they either failed due to inappropriate design, or had certain socioeconomic limitations (Jayantha 1994)

The processing machines made in Sri Lanka were based on various milling techniques (Jayantha 1995) The attrition type of machine uses a pair of rigid, co-axially mounted abrasive discs (one stationary and the other rotating) The clearance between the two discs is adjusted by moving one disc along the axis of rotation During milling, the grains move from the center of the discs to their periphery (Fig 2) In the abrasion type of machine, a set of abrasive discs rotating inside a box are used to mill the grain A fixed quantity of grain is placed in the box and the machine is run for a pre-determined period (Fig 3) In the third type of machine, the grain is subjected to a combination of thrust and abrasion, between a rotating abrasive roller (conical or cylindrical) and a steel mesh or perforated steel plate (Fig 4)

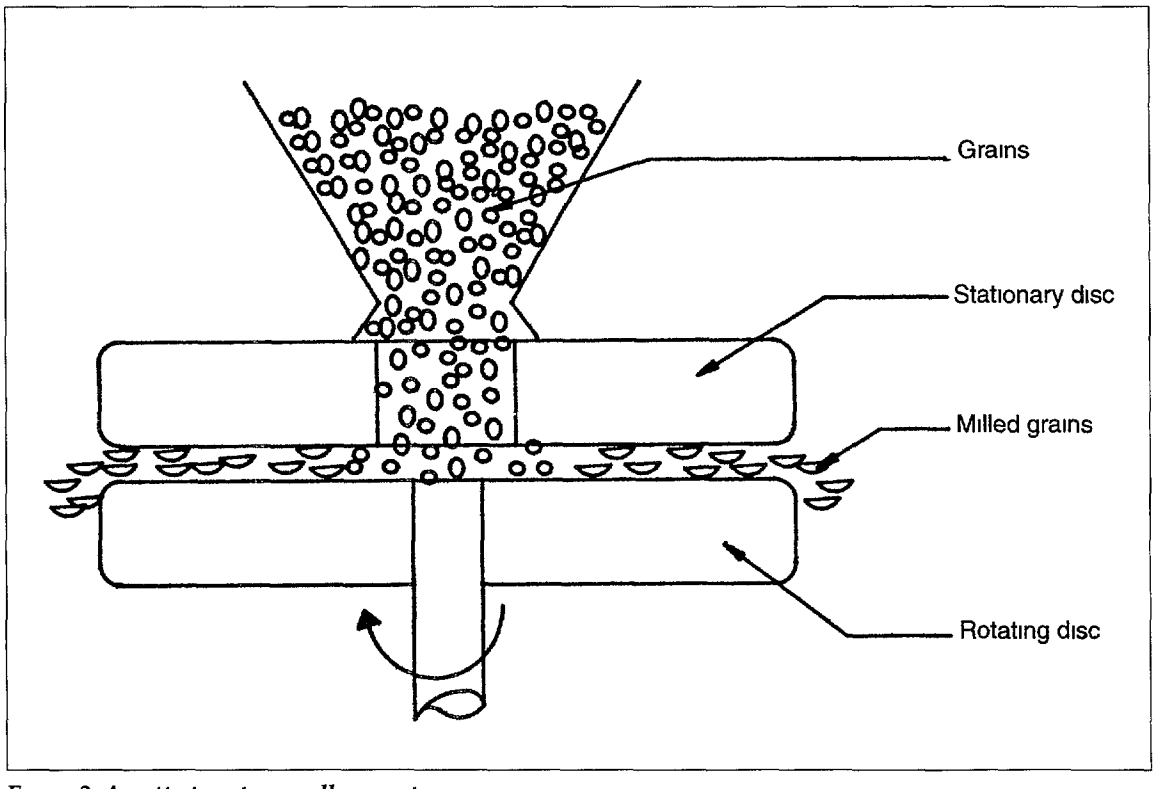

Figure 2 An attrition type milling unit

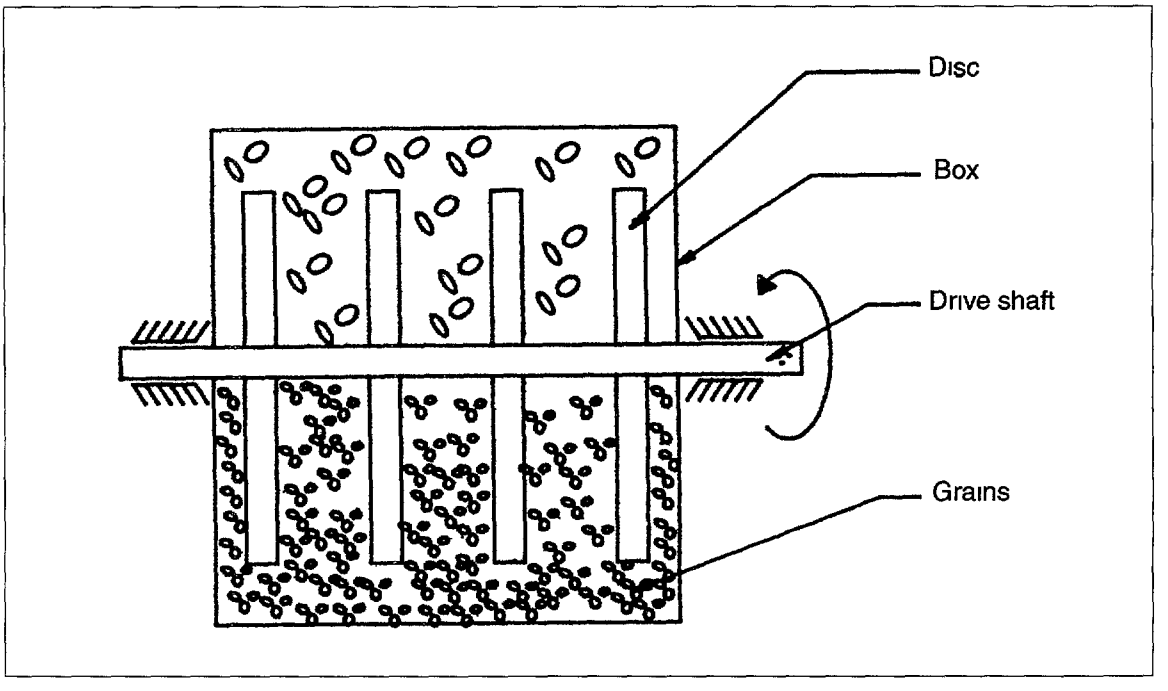

Figure 3 An abrasion type milling unit

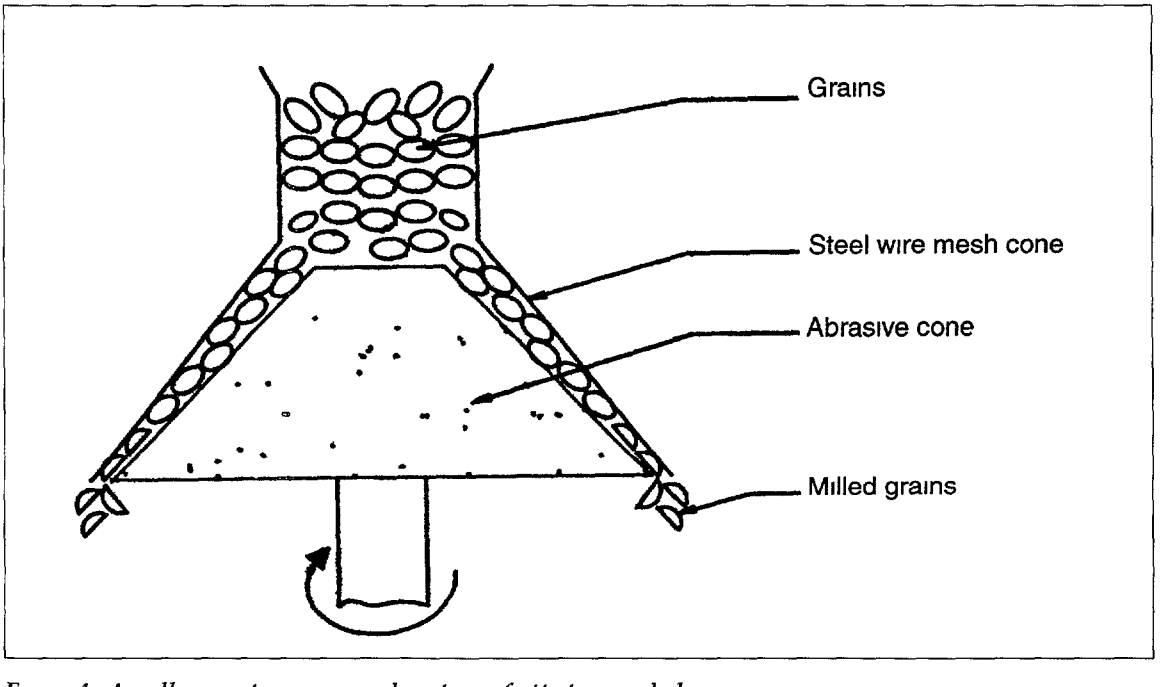

Figure 4 A milling unit using a combination of attrition and abrasion

For a successful pigeonpea introduction program in new areas/countries, it is necessary to link production with processing In Sri Lanka, too, earlier efforts to introduce pigeonpea failed partly due to the non-availability of suitable processing technology To meet this challenge", two institutions of the Sri Lankan Department of Agriculture — the Farm Mechanization Research Centre (FMRC) and the Field Crops Research and Development Institute (FCRDI) — jointly designed and developed a versatile small-scale dhal producing machine (Fig 5) that was quickly adopted by several small-scale traders and farm organizations As a result of the development of the new processor the extent of pigeonpea cultivation in Sri Lanka is now progressively increasing The machine s simple and compact design facilitates easy manufacture, operation, maintenance, and transportation The unit operates without much noise and vibration, and can be easily adjusted to process such pulses as cowpea, green gram, soybean, etc , with high recovery and quality at low cost

The availability of this small-scale processor in areas where the crop is grown will provide an inexpensive source of protein for rural populations It will moreover help increase farmers' incomes by eliminating middlemen, produce a value-added product, and generate employment The machine could therefore fulfill a long-felt need of various pigeonpea growing countries Besides describing the main features of the processing machine, this bulletin provides relevant information on its operation, maintenance, and socioeconomic feasibility

The new milling technique

The new machine developed at FMRC can process various types of pulses with high recovery and quality In this technique, an abrasive cone rotates inside a stationary hollow cone (Fig 6) The two cones are co-axially mounted in order to maintain a uniform milling clearance The clearance can be adjusted according to grain

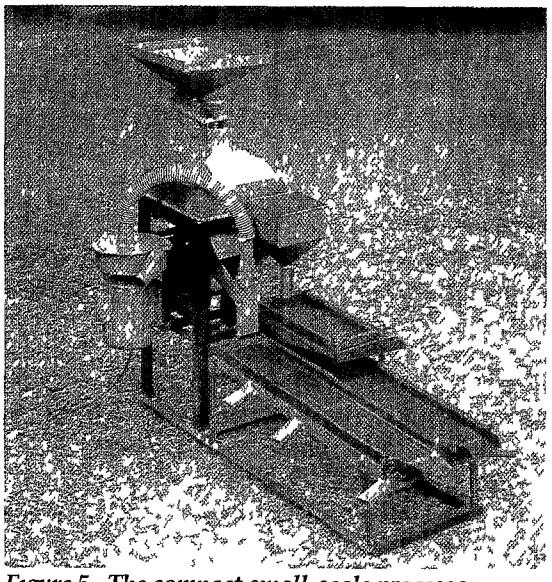

Figure 5 The compact small-scale processor developed at FMRC, Sri Lanka

size simply by moving the stationary cone upward or downward The larger clearance at the top of the assembly is designed for optimum intake of grain while at the bottom, only one layer of grain can be accommodated for maximum dehulling efficiency and quality

The rotary inner cone has a rigid outer lining made of No 16 grit carborundum The stationary outer cone has two types of lining on the inside the upper portion is lined with 9-mm-thick rubber sheet, while the lower portion (a 3 8-cm-high band) is lined with abrasive carborundum of No 16 grit (Figs 6 and 7) As the inner cone rotates, the grains move from top to bottom in a spiral path around the cone, due to their weight and the friction forces exerted on them The grains also tend to rotate as they move down, and the abrasive action helps remove the seed coat The rotation of grains is an important event, and it is facilitated by the frictional forces exerted on them and the softness of the rubber lining These frictional forces are less powerful than the shear strength of the gum layer binding the two cotyledons of the grains (Fig 8) This results in the exertion of a force-couple on the grains that helps to rotate them and thereby facilitates their dehulling

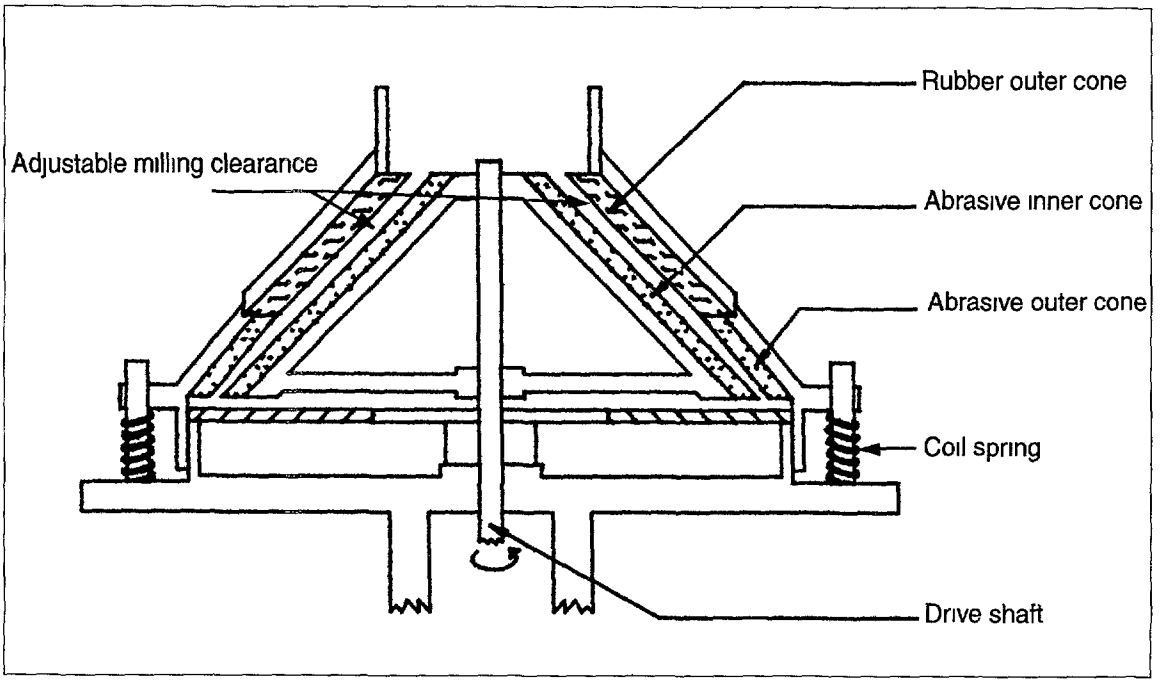

Figure 6 Design (sectional view) of the milling unit

Figure 7 The inner and outer cones of the milling unit The inner cone is lined with abrasive carborundum The outer cone has two types of lining inside rubber at the top, and a band of carborundum at the base

The cushioning effect of the rubber sheet also allows the grains to rotate without breaking (Fig 9) and maintains a low reaction on the grains The dehulled unsplit grains — pearls — then move further down into the space between the inner cone and the lower abrasive portion of the outer cone At this point the frictional forces exerted on the pearls exceed the shear strength of the gum layer between the two cotyledons, resulting in the pearls being split into *dhal* The *dhal* and husk drop directly into a hopper below through the two openings (ports) of the metal base plate under the inner cone When processing such small grains as black gram, only one port is kept open, as it increases the distance that the grains need to travel between the two cones resulting in effective dehulling and splitting

This combined attrition-abrasion milling technique ensures both high recovery and quality in dehulling and splitting pulse grains making the machine far superior to other types operating on the principle of attrition or abrasion The recovery and quality of *dhal* mainly

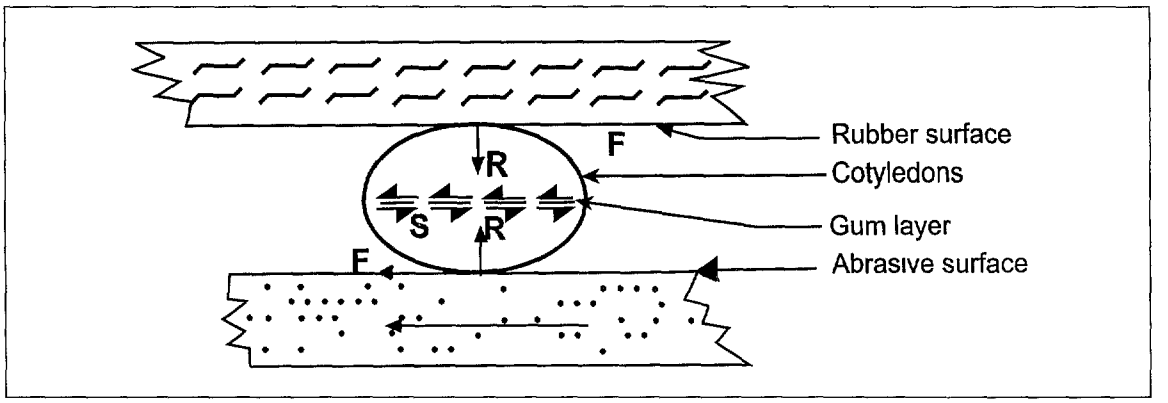

Figure 8 Forces exerted on a pulse grain during the milling operation (F=frictional, R=reaction, S=shear)

depend on the peripheral speed and surface roughness of the rotary cone, and the gap between the two milling cones In this machine, the mean velocity of the inner cone surface (2 5 m sec^{1}) and surface roughness (No 16 grit) have been fixed at optimum levels A simple adjustment of the milling clearance between the two cones is sufficient to ready the machine to process grains of various sizes

Description of the machine

The new pulse processor elegantly integrates the three major operating units — milling, air aspiration, cleaning and grading — required to produce high-quality *dhal* All these units are simultaneously driven by a single electric motor, and are mounted on a rigid 5-cm angle iron frame to provide stability during its operation and transport (Fig 10)

Specifications

Overall size		*Capacity*	
Length	180 cm	Pigeonpea	40 kg ha^{1}
Width	95 cm	Other pulses	50 kg ha^{1}
Height	150 cm		
Weight	130 kg		
Recovery	70–74%		
Power	electric motor (1-hp, single-phase, four-pole)		

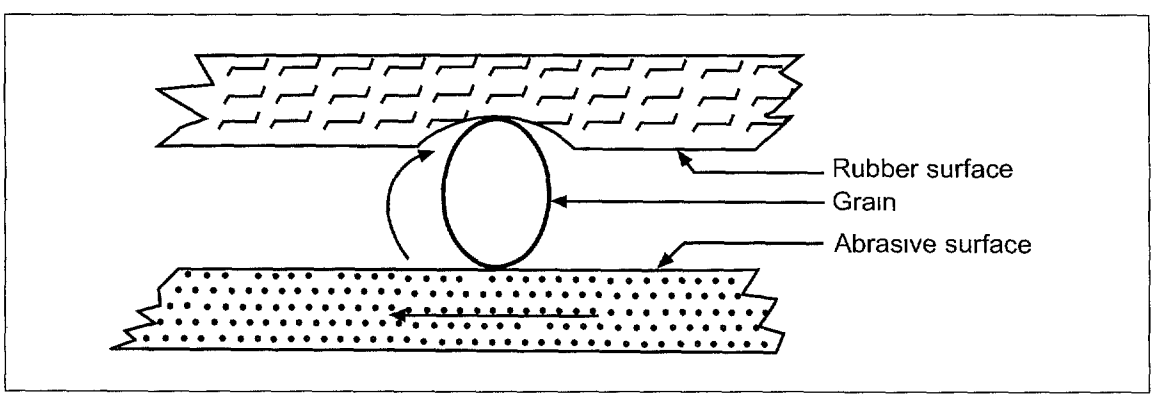

Figure 9 Rotation of the grain between the stationary (rubber) and moving (abrasive) surfaces during the milling operation

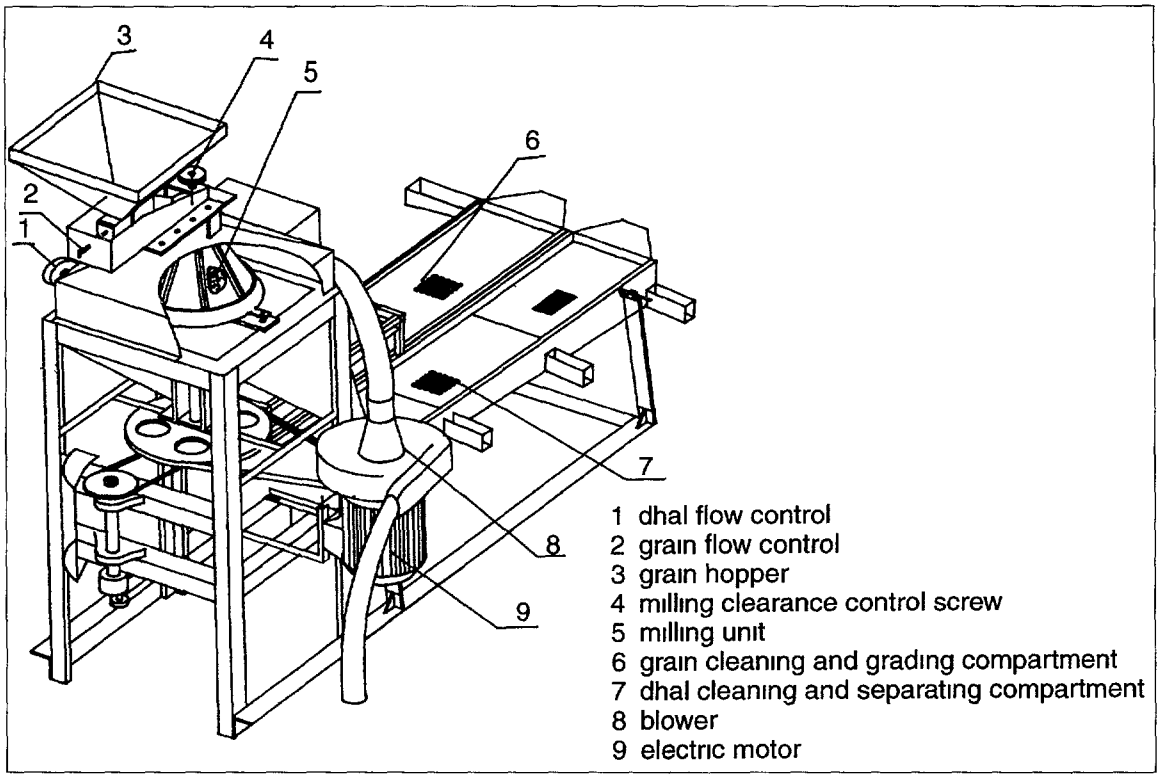

Figure 10 General view of the new pulse processing machine showing the main components and controls

Milling assembly

The milling assembly consists of a feeding hopper, a milling unit and a collection hopper A grain flow control gate is located below the feeding hopper The milling unit (Fig 10-5) is compact in design consisting of a rotary inner abrasive cone an outer hollow cone metal base plate, and a rigid mount

The rotary cone (13 2 cm high, 25 7 cm base diameter) is fixed to the upper end of the drive shaft that runs on sealed ball bearings housed in a bearing bracket The shaft is driven by an electric motor at 300 rpm The bearing bracket is mounted rigidly on the main frame of the machine The outer cone has four projecting lugs with holes that sit on coil springs placed on the vertical pins fixed on the extended arms of the bearing bracket (Figs 6 and 11) This type of assembly enables easy positioning of the outer cone and its perfect alignment with the axis of the rotary inner cone To adjust the milling clearance, the outer cone can be moved upward or downward with the help of a spring-loaded bolt located at the top of the cone The clearance between the rotary inner cone and the stationary outer cone can be adjusted anywhere between 0 5 to 7 mm Underneath the cones, this gap is closed by a metal plate with two ports through which the milled grains are dropped into the bottom hopper One of these ports is always open while the other can be closed or opened by sliding a plate over the port A hopper, attached to the main frame, delivers the milled grains directly into an air duct before they reach the cleaning and grading assembly

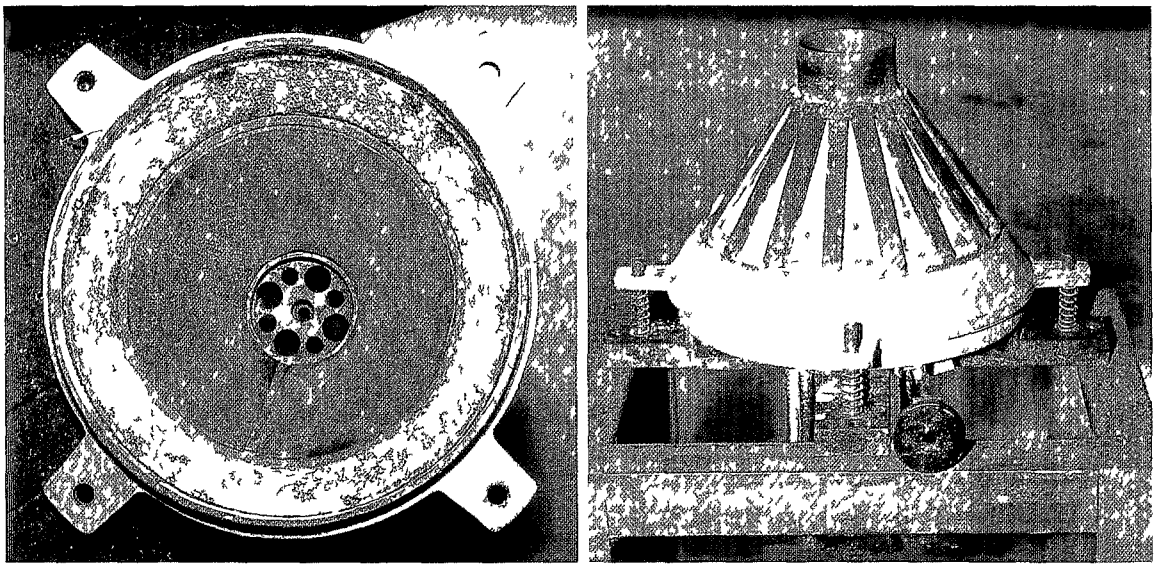

Figure 11 The outer milling cone with lugs (left), and its assembly on the inner cone (right)

Cleaning and grading assembly

The cleaning and grading of grain and *dhal* are carried out by using sieves of different sizes mounted on a single frame (square-sectioned steel tube) This unit is divided into two compartments to receive whole grain and milled *dhal* separately, and it rests on four wooden arms to facilitate optimum oscillation with a backward angle of 9° The compartments are slightly inclined (2°) toward the front (Fig 12) The unit oscillates at 5 cycles per second, with an amplitude of 12 mm Two manually operated brushes beneath the sieves help release any material that gets stuck in the holes of the sieve

The grain cleaning and grading compartment (Figs 10 and 12) has two tiers The top tier has a single 50 × 20 cm sieve with 7 mm diameter round holes The lower tier has two sieves — a 50 × 20 cm sieve with 3 5 mm oblong holes, and a 60 × 20 cm sieve with 5 5 mm diameter round holes

The *dhal* cleaning and grading compartment (Figs 10 and 13) consists of a series of sieves The first sieve (25 × 20 cm) has 2 5 mm diameter round holes, the second sieve (25 × 20 cm) has 4 mm round holes, and the third sieve (60 × 20 cm) has 3 2 mm oblong holes A separate hopper is attached under each sieve to collect the graded material that drops through the holes (Fig 14)

Air aspiration assembly

A blower, directly coupled to the drive motor, helps to remove the chaff and other light particles from the milled grain immediately after processing A flexible hose connects the blower suction port to an air duct through which the milled grain is delivered to the cleaning and grading sieves after processing

Critical adjustments

Before processing any material, three critical adjustments are made to the machine to optimize the output capacity, recovery, and quality

Grain flow control The rate of grain flow into the milling chamber is important, and determines the dehulling quality High grain flow reduces the quality and increases losses due to breakages Sometimes, the machine can be overloaded by an excessive flow of grain On

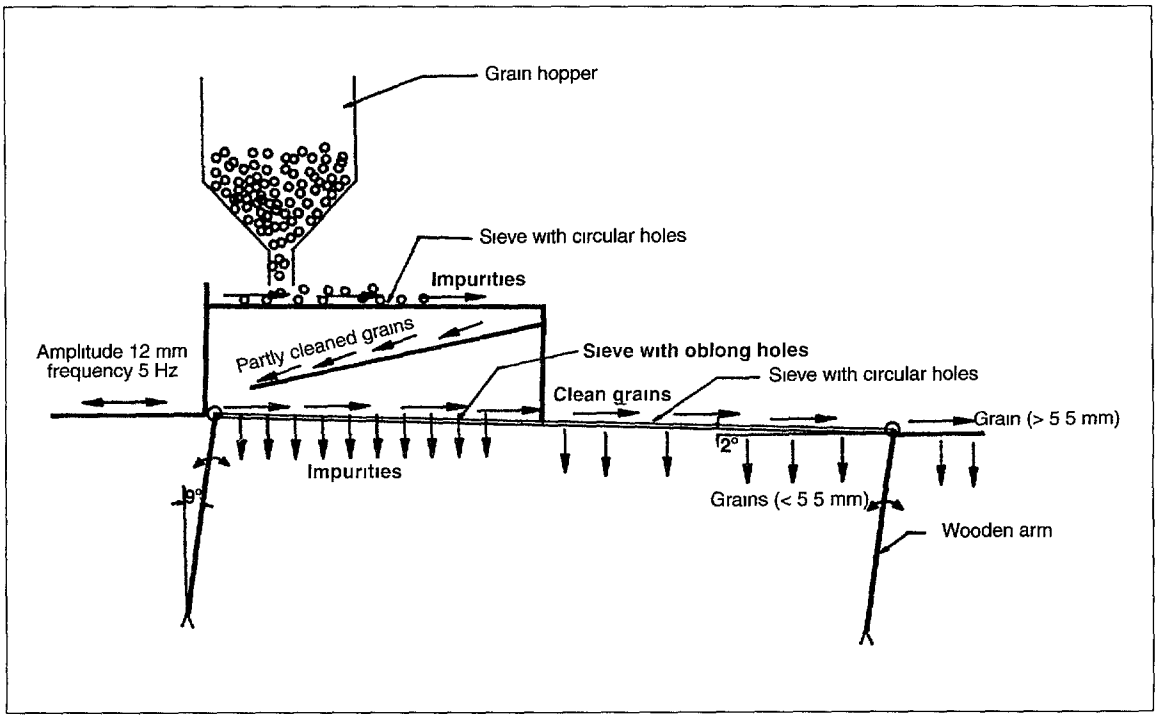

Figure 12 Grain cleaning and grading compartment

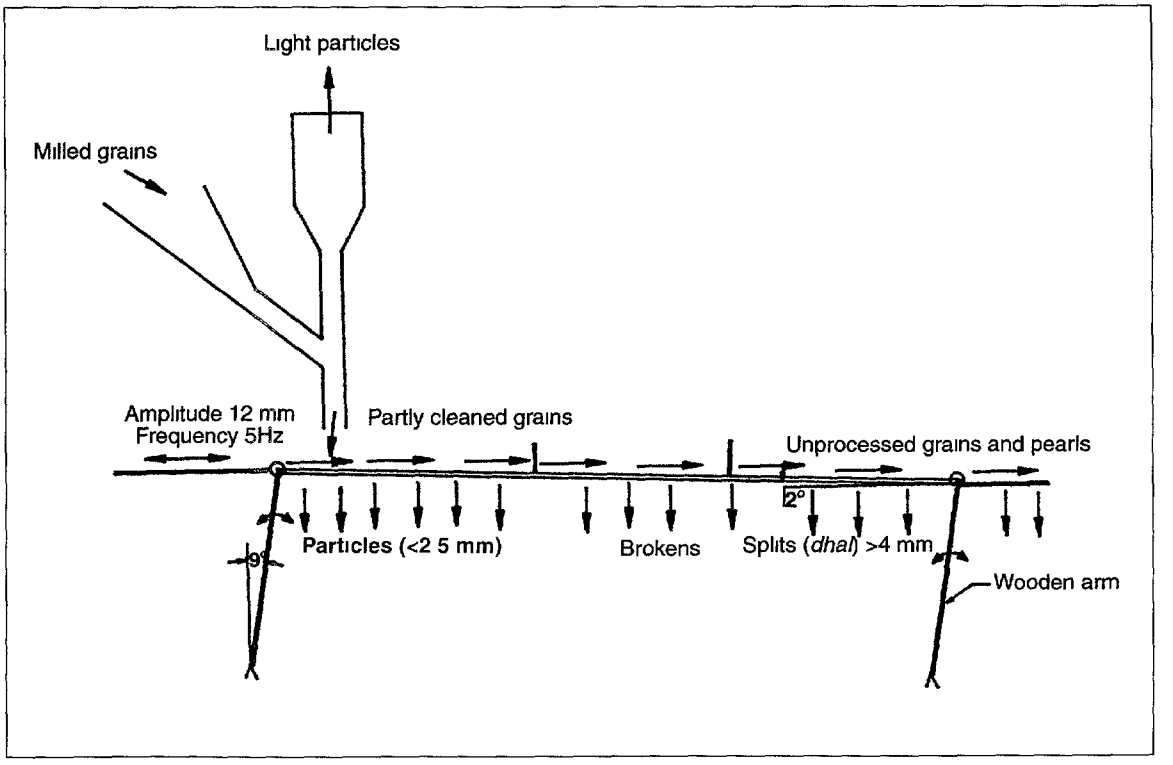

Figure 13 Dhal cleaning and grading compartment

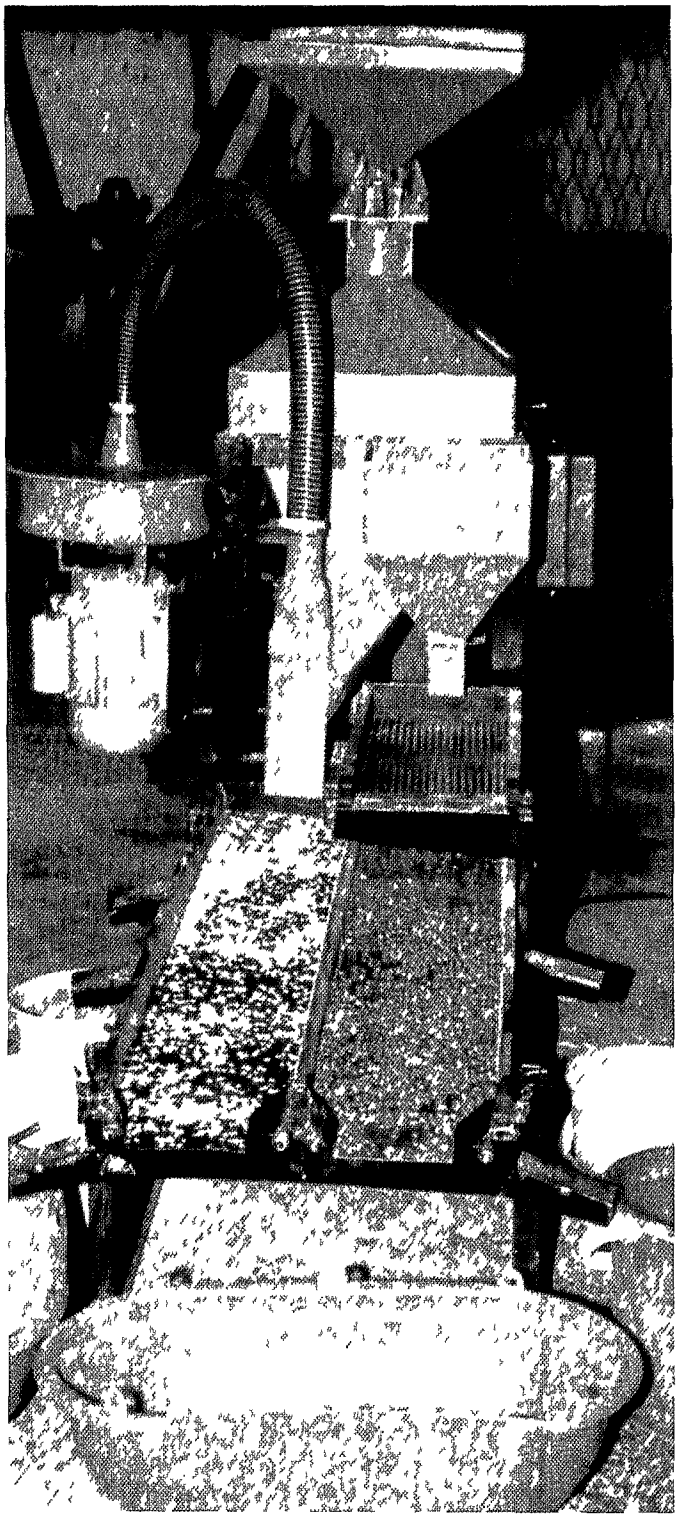

the other hand, reduced grain flow will lower the output of the machine The grain flow into the milling chamber can be controlled by adjusting the sliding plate located at the bottom of the grain hopper (Fig 10-2)

Milling clearance This is most critical adjustment of the machine The gap between the inner and outer cones can be controlled by turning a bolt located at the top of the milling unit (Fig 10-4) Tightening the bolt clockwise pushes the outer cone downward reducing the gap between the cones This gap has to be re-adjusted for each grain lot

***Dhal* flow control** The milling assembly has a base plate with two ports through which the milled grains are dropped into a hopper below One of these ports is always open, while the other the *dhal* flow control port can be closed or opened by turning a screw that moves a sliding plate over the port (Fig 10-1) When processing large-grained pulses both ports are kept open For such small grains as black gram, the adjustable flow control port is closed

Maintenance and repair

The pulse processor has been designed for trouble-free operation and minimum maintenance Even though the machine has several vital moving parts, no periodic lubrication is necessary Each pivot point uses self-lubricating polyethylene bushes that can be

Figure 14 Cleaning and grading of pigeonpea grain and **dhal** *The compartment on the right cleans and grades whole pigeonpea grain before milling Milled* **dhal** *is delivered through the vertical air duct to the cleaning and grading sieves on the left*

replaced easily without any special tools Both the main drive shaft and the intermediate shafts are mounted on long-lasting, self-lubricating, sealed ball bearings The most fragile components of the machine are the wooden swinging arms of the oscillating unit which can be damaged by inappropriate handling or transport Therefore, it is advisable to keep one spare set of swinging arms while operating the machine in remote areas No other spares are required for the routine operation of the machine Table 1 gives an outline of a typical maintenance schedule The estimated maintenance costs of operating the machine for a period of 1 year or 3000 h are given in Table 2, and are easily affordable by small-scale millers

Efficiency of the machine

Processing tests conducted at FMRC have shown that the machine can process both water- and oil-treated pigeonpea grain The water-treated samples showed slightly higher (74%) recovery than oil-treated samples (71%) However, the quality of *dhal*, measured in terms of damaged and seed-coat-intact splits, was the same in the two treatments It was also demonstrated, using water-treated grain, that the *dhal* recovery in the FMRC machine (74%) was higher than the recovery obtained with the attrition (60%) and abrasion (70%) types of machines The *dhal* produced by the new processor also had better appearance

Table 1 Summary of routine maintenance of the processing machine

Interval of operation (h)	Maintenance job
750	Replace polyethylene bushes
5 000	Redress abrasive cone replace rubber lining of outer cone
15 000	Replaster abrasive cone and replace ball bearings

Table 2 Estimated maintenance cost of the processing machine (1 year or 3000 h)

Description of maintenance work	Cost (Rs)[1]
Replacement of polyethylene bushes	50 00
Redressing of abrasive cone	250 00
Plastering of abrasive cone	350 00
Replacement of outer rubber lining	75 00
Replacement of ball bearings	450 00
Other breakdowns	500 00
Total	1675 00
Maintenance cost h^{1}	0 52
Maintenance cost kg^{-1} *dhal*	0 02

1 All costs in Sri Lankan rupees 1 US$ = Sri Lankan Rs 54

Technical and socioeconomic feasibility

Handling and operation

The machine is driven by a 1-hp single-phase electric motor and can therefore be operated on domestic power supply The machine is built on a rigid metal frame base and does not need to be fixed on the ground It can be transported easily from one place to another The incorporation of the cleaning and grading functions within a single processing unit helps to produce high-quality *dhal* with high recovery The versatility of the machine in processing different types of pulses of various grain sizes has increased its utility and demand No specialized technical skill is required to operate the machine, and any person with some basic training can use it effectively, which makes it particularly suitable for wide use in rural areas

Although one person can operate this machine continuously without fatigue a helper is required to handle the material for processing All the critical control devices can be operated with ease Only simple adjustments are required for dehulling different pulses Once the machine is adjusted to process a particular grain lot for optimum output and high quality,

it can be operated for long periods without any further minor or major adjustments The routine maintenance of the machine is easy and cost-effective The operational cost of producing 100 kg *dhal* is estimated to be about Rs 185 (1 US $ = 54 Sri Lankan rupees)

Safety features

The machine has been designed for a high standard of safety with respect to noise level, vibration, location of moving parts and control devices, installation of electrical equipment, etc Both vibration and noise have been reduced to a minimum, and the operator does not run any risk of deafness due to prolonged operation Standard shock-proof electrical equipment eliminates the risk of electrocution All the rotating parts of the machine are compact and enclosed All critical controls can be reached easily by the operator from one position Once the machine is set in its optimum processing mode, the operator can move freely around without any danger of accident

Preparation of grain for processing

The milling quality and recovery of the grain are determined by several physical factors These include the content of husk and its hardness, the amount, chemical nature, and hydration level of gums, and the shape, size and moisture content of grain (Kurien 1981) Also, care should be taken to prevent grain damage by storage pests between harvesting and milling

Grain cleaning, drying, and grading

In order to obtain quality *dhal*, any undesirable foreign matter and plant debris should be removed from the grain lot mechanically or by hand winnowing High moisture content of grain is known to reduce dehusking percentage Different varieties could have different seed moisture requirements for maximum dehusking (Kurien 1981) For commercial dehulling, where the grain lots and varieties differ considerably, it may not be possible to obtain an optimum moisture level, it is recommended that the seeds be sun-dried to about 8% moisture level Excessive drying, however, can lead to hardening of grain and increased scouring and losses due to breakage

Generally, within a grain lot or variety, there is always some variation in grain size and shape, either due to physiological disorders or insect damage during the grain filling stage The uniformity of grain is essential for efficient dehulling and splitting, grain lots should therefore be graded properly before processing

Pre-milling grain treatments

The pigeonpea seed coat or husk is attached to its cotyledons by a layer of gums and lignin The mechanism of adherence of the husk to the cotyledons has not been fully explained, but it is believed to be related to the tackiness of the gums, which in turn depends on the amount, chemical nature, and extent of hydration A pre-milling treatment of the grain is therefore essential to weaken the chemical bond between the husk and the cotyledons, and between the two cotyledons According to Kurien (1981), the loosening of the husk can be achieved by one or a combination of the following operations

- prolonged sun-drying until the seed coat is loosened
- application of small quantities of oil and/or water, followed by several days of sun-drying
- soaking in water, followed by coating with red earth slurry, and sun-drying for several hours

In the wet process, the soluble gums leach out into the soak water and the grains swell up On drying, the cotyledons shrink resulting in the husk becoming loose, and also tend to "cave in' at the surface of contact with each

other Abrasive pressure then separates the husk and splits the cotyledons (Kurien and Parpia 1968) In the dry method, the oil penetrates into the gum layer and, with the mild heat of the sun, spreads and reduces the layer s tackiness (Kurien 1981)

At FMRC, various grain treatment combinations were tested in collaboration with food technologists It was found that mixing coconut oil @ 0 5–1% by weight, followed by sprinkling small quantities of water, and then sun-drying to about 8% moisture level was most suitable for loosening pigeonpea grain husk The grains have to be "pitted' to facilitate the entry of oil through the seed coat This is done by passing the entire grain lot through the milling unit, with the gap between the cones only wide enough to crack the seed coat The oil treatment can be carried out even on overcast days since the partially treated grain can be kept for 2–3 weeks without sun-drying This treatment yields good quality *dhal*

In the water treatment process, the grain is soaked for 3–4 h followed by sun-drying However, the grain must be dried soon after soaking to prevent its decay

Processing operations

The various steps involved in processing pigeonpea grain are summarized in Figure 15 Each grain lot is cleaned properly before processing to remove impurities, and graded The grain is fed into the small hopper of the machine from which it falls directly on the upper tier of the oscillating grader The sieves of the upper tier remove chaff, stones, and mud clots, while the lower tier sieves out immature/shrunken grain and other small particles At the final sieving stage, two grain lots of different grain size are obtained These are processed separately

Each grain lot is treated with oil and/or water and, after drying, the grain is fed into the main hopper for dehulling The flow rate and milling clearance between the cones is adjusted The milled grain drops into the

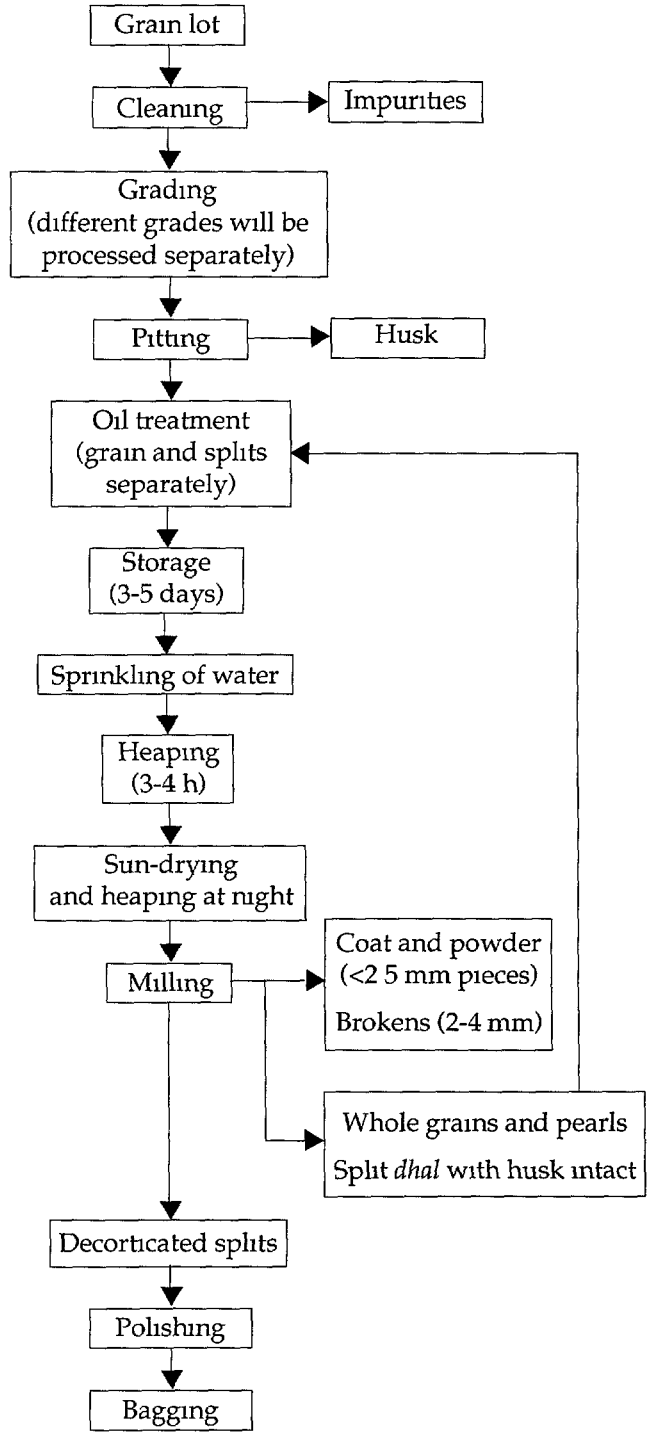

Figure 15 Flow diagram of pigeonpea oil treatment and processing using the FMRC machine

hopper through the *dhal* dropping ports of the metal base plate Usually, both dropping ports are kept open while dehulling pigeonpea, cowpea, and soybean However, if the machine is used to dehul black gram or green gram, only one port is opened The milled material moves further down through an air duct at the bottom of the hopper Chaff, dust, and other light particles, together with a certain percentage of brokens (<0 5%) are sucked by the upward air stream The partially cleaned material drops onto the oscillating sieving unit which separates small (<2 5 mm) and large (>2 5 mm and <4 mm) particles, splits, and unprocessed grain The unprocessed grain can be fed into the milling chamber again The pearls and whole grain which remain unprocessed even after the second pass are treated again before re-processing Particles trapped in the sieve holes are removed at regular intervals by pulling and pushing the brushes located under the sieve The splits (*dhal*) obtained from the machine are polished by rubbing them with a soft cotton cloth This removes fine dust particles from the surface of splits and imparts a shine

Additional information

Additional information about the availability and cost of the machine and seed processing technology can be obtained from the Director General Department of Agriculture Peradeniya, Sri Lanka

Acknowledgments

The authors gratefully acknowledge the encouragement and support provided by Dr Dimyati Nangju Lead Agronomist, Asian Development Bank, Philippines Dr Sarath Amarasiri, Director General and Dr K D S M Joseph, Director Field Crops Research and Development Institute (FCRDI), Sri Lanka Mrs Laxmi Jayasekera and Mr T G Siriwardane, Food Technologists of the Department of Agriculture, Sri Lanka, S M Barghouti, Director General, C L L Gowda, Coordinator (CLAN), and Laxman Singh, former Principal Pigeonpea Breeder, International Crops Research Institute for the Semi-Arid Tropics (ICRISAT), India

Financial assistance for this project was provided by the Asian Development Bank and the Department of Agriculture, Government of Sri Lanka A part of the financial resources required for field testing of the machines was also shared by the Central Agriculture Research Policy, Sri Lanka The dedicated work of the Workshop staff of the Farm Mechanization Research Center (FMRC), Sri Lanka, in fabricating the prototypes is acknowledged

References

Jayantha, H M N 1994 Report on exploration in India of pigeonpea processing A survey report on processing machines submitted to the International Crops Research Institute for the Semi-Arid Tropics (ICRISAT), Patancheru 502 324, Andhra Pradesh, India 6 pp (Limited distribution)

Jayantha, H M N 1995 Progress report on pigeonpea processing from January 1993 to June 1995 Farm Mechanization Research Centre Maha Illuppallama Sri Lanka 10 pp (Limited distribution)

Kurien, P P 1981 Advances in milling technology of pigeonpea Pages 321–328 *in* Proceedings of the International Workshop of Pigeonpea 15–19 Dec 1980, ICRISAT Center, India Vol 1 Patancheru 502 324 Andhra Pradesh, India International Crops Research Institute for the Semi-Arid Tropics

Kurien, P P, and **Parpia, H A.B** 1968 Pulse milling in India 1 Processing and milling of tur (arhar) Journal of Food Science and Technology 5 203

About ICRISAT

The semi-arid tropics (SAT) encompasses parts of 48 developing countries including most of India, parts of southeast Asia, a swathe across sub-Saharan Africa, much of southern and eastern Africa, and parts of Latin America Many of these countries are among the poorest in the world Approximately one-sixth of the world's population lives in the SAT, which is typified by unpredictable weather, limited and erratic rainfall, and nutrient-poor soils

ICRISAT's mandate crops are sorghum, pearl millet, finger millet, chickpea, pigeonpea, and groundnut, these six crops are vital to life for the ever-increasing populations of the semi-arid tropics ICRISAT's mission is to conduct research which can lead to enhanced sustainable production of these crops and to improved management of the limited natural resources of the SAT ICRISAT communicates information on technologies as they are developed through workshops, networks, training, library services, and publishing

ICRISAT was established in 1972 It is one of 16 nonprofit, research and training centers funded through the Consultative Group on International Agricultural Research (CGIAR) The CGIAR is an informal association of approximately 50 public and private sector donors, it is co-sponsored by the Food and Agriculture Organization of the United Nations (FAO), the United Nations Development Programme (UNDP), the United Nations Environment Programme (UNEP), and the World Bank

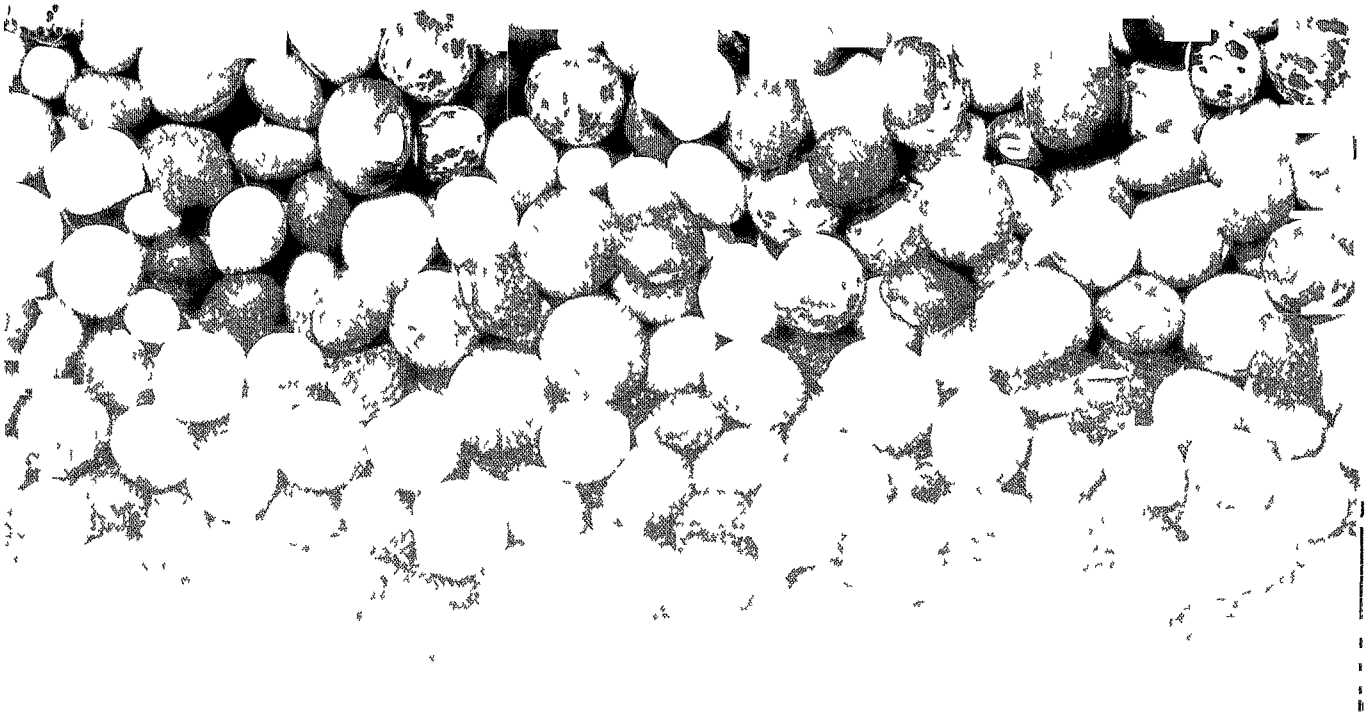

Farm Mechanization Research Centre
Department of Agriculture,
Ministry of Agriculture and Lands, Maha Illuppallamma, Sri Lanka

International Crops Research Institute for the Semi-Arid Tropics
Patancheru 502 324, Andhra Pradesh, India

Consultative Group on International Agricultural Research
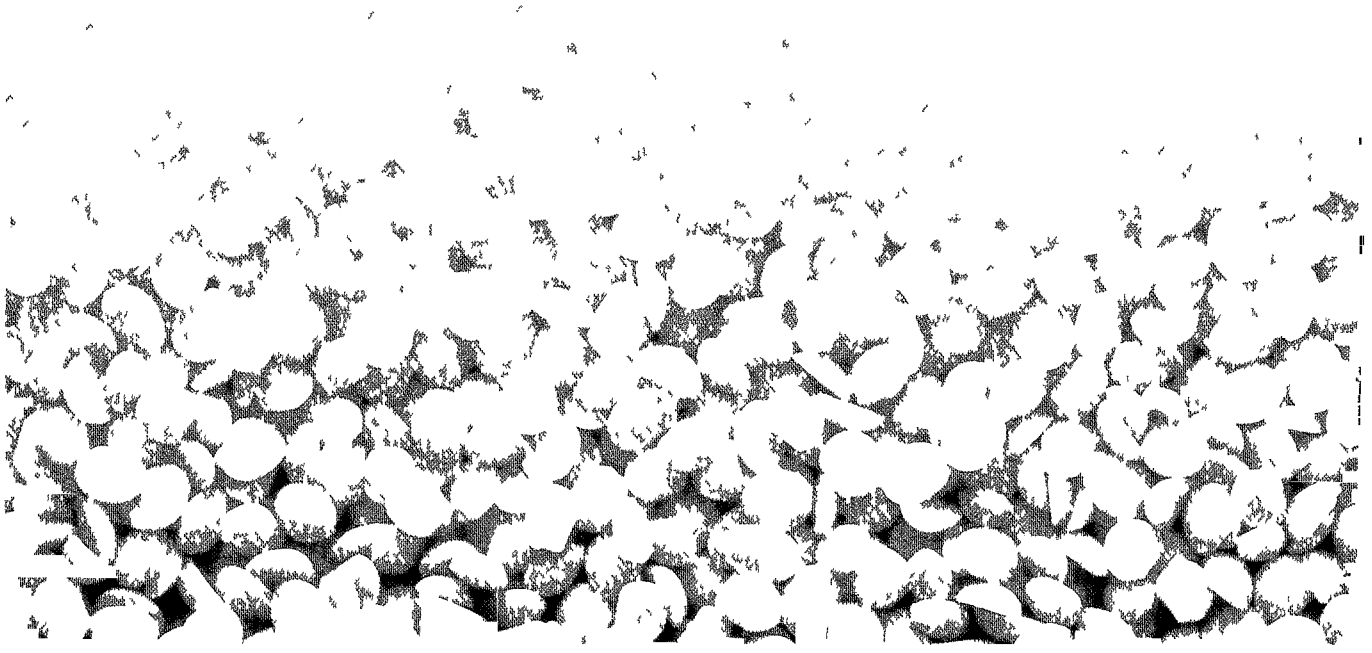
ISBN 92-9066 394 4 Order code IBE 054 246 98