PN-ACD-788
99577

FINAL REPORT

Covering Period: August 1, 1997 to September 30, 1998

Submitted to Office of Agriculture, Food and Security
Bureau for Global Programs, Field Support and Research
US Agency for International Development

COMBINED CYCLE COAL UTILIZATION FOR POWER AND CHEMICALS

Principal Investigators	Y Goldman, A Shavit
Grantee Institution	Technion-Israel Institute of Technology
Collaborator	M Buchman, B B Alijarov
Institution	Kazakh Scientific Research Institute of Energetics

Project Number	CA 14-012
Grant Number	TA-MOU-95
USAID Grant Project Officer	John Daly Office of Science Technology & Communications
Project Duration	December 1, 1995 to September 30, 1998

COMBINED CYCLE COAL UTILIZATION FOR POWER AND CHEMICALS

Executive Summary

The aim of the project is to combine the efforts of scientists from Israel and Kazakhstan in developing and testing some subsystems of a novel cycle of coal utilization, mostly for energy applications

Experimental facilities for mild gasification of coal, for coal combustion in the conditions prevailing in gas turbines and for hot ash separation were erected at the Technion They were equipped with measuring and controlling instrumentation At the same time a gasification scheme was developed and built at the Kazakh Scientific Research Institute of Energetic This facility includes subsystems, sufficient for long term hot investigation of the mild gasification processes and ash separation

A series of experiments were performed by a joint Israel-Kazakh team on the facilities erected at the Technion This included cold and hot tests of a prototype of the gasification rig The main conclusions and recommendations resulting from these experiments were used for improvement of the facility erected in Kazakhstan Experimental investigation of coal combustion and ash separation were performed in a model of the gas turbine The coal burning process was studied theoretically using a computer code developed at the Technion

Hot tests of the coal gasification and ash separation systems were conducted at the Technion and at the Kazakh Institute of Energetics and the results discussed by the joint team The two-chamber gasification reactor concept differs from other known mild gasification systems by entailing heat transport to a raw coal powder by means of mixing a fluidized hot char with the raw coal, which is entrained through the fluidizing bed The tests showed that the parameters, which most influence the rate of the process are the configuration of the flow channels, the area of the powder seals and the superficial velocity in the fluidization chamber

Mild Gasification Tests in Kazakhstan

An experimental facility for mild (moderate temperature) gasification of coal was erected in Kazakh Institute of Energy It was developed for continuous operation at temperatures of 800°-900°C during relatively long periods A direct photograph of the facility is presented in Fig 1 The components of the two-chamber multisolid reactor, including recirculated fluidized bed are presented in Fig 2

A gasification scheme used in Kazakhstan is based on results of the experimental research on a similar model of the reactor, which was performed in the Technion by the joint scientific team, including Dr M Buchman of Kazakh Inst of Energy The main conclusions and recommendations resulting from these experiments were used for improvement of the facility

The facility includes 1 pyrolizer, 2 funnel for coal dust, 3 screw feeder, 4 combustion chamber (inner diameter of 164 mm), for providing hot combustion products with temperatures of 800°–900°C, 5 Cyclone for ash, 6 ash accumulator, 7 tar condenser, including heat exchanger for preheating circulating gas up to 300°–350°C, 8 tar collector, 9 water installation, 10 channel for providing hot pyrolized gas, 11 channel for cold pyrolized gas, 12 channel for preheated gas, 13 flowmeters, 14 fan, 15 exhaust

Results of the tests in Kazakhstan and discussion on continuation of the developmental activity in the field were prepared for publication in scientific journals and conferences Future research and development work is planned by the joint team

Scientific Impact of Collaboration

The results confirm the feasibility of the suggested scheme, and indicate a number of changes, found to be necessary in the pilot apparatus to improve the heat transfer rate and the separation of the products The possibility of sufficient intensification of the heat transport without mixing the

gases was indicated The Kazakh scientists mentioned that, in general, the developed scheme will allow gradual replacement of petroleum by coal as a feedstock for chemicals in addition to its role for power generalization It is directed to improvement of the level of ecological and energetic uses of the main coal resources in Kazakhstan

Main research objectives as well as methods and results are published in scientific conferences and journals

Following section represents the papers prepared for publication

Publications

1 Y Goldman, A Shavit, Y Dayan "Transfer Process in Multisolid Two-Chamber Recirculated Reactor", ASME paper, HTD – Vol 352 Proceedings of the Heat Transfer Division, Vol 2, pp 231-237 Presented at 1997 ASME International Mechanical Eng Congress, Dallas, Nov 16-21, 1997

2 M Buchman, Y Goldman "Development and Study of Mild Coal Gasification Demonstration Plant", 13th Annual Symposium of the Israeli Section of the Combustion Institute, Dec 1997 Book of Abstracts, P–24 1–3

3 Y Belilovsky, Y Goldman and A Povitsky "Multicyclone Fire Gas Pre-Cleaning in Coal-Fueling Gas Turbine", 13th Annual Symposium of the Israeli Section of the Combustion Institute, Dec 1997 Book of Abstracts, P–23 1

4 Y Belilovsky and Y Goldman "Interaction Between Strong Aerosol Jet and Turbine Blade Surfaces", Eleventh Annual Meeting of IAAR Israeli Association for Aerosol Research, Abstracts of Lectures Eds M Shapiro and H Wirzberger, Dec 29, 1997, Faculty of Mechanical Engineering, Technion-Israel Institute of Technology, Haifa

Additional information which was not included in the publications, is presented in the section Mild Gasification Tests in Kazakhstan

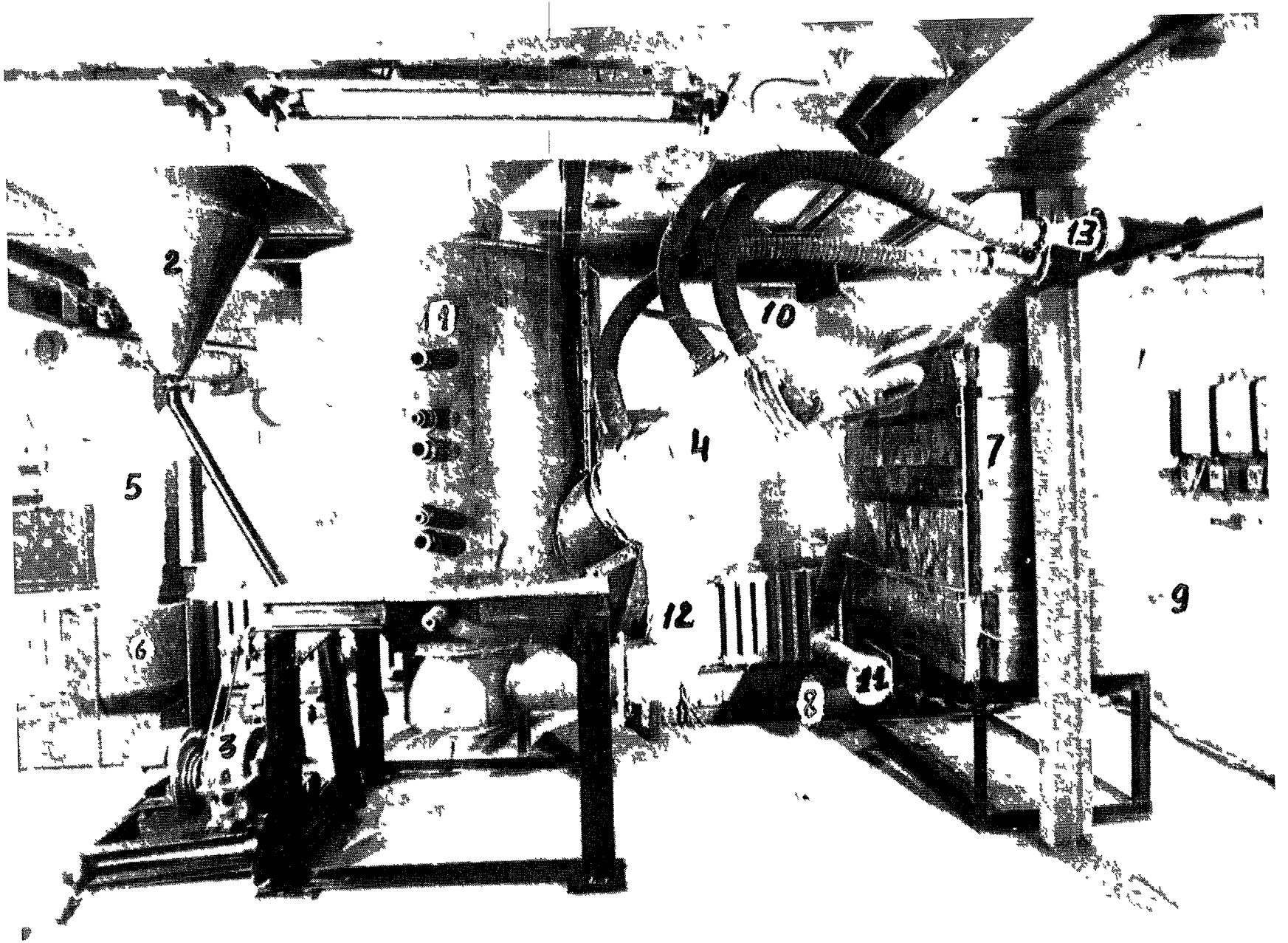

Fig 1 Experimental facility in Kazakhstan

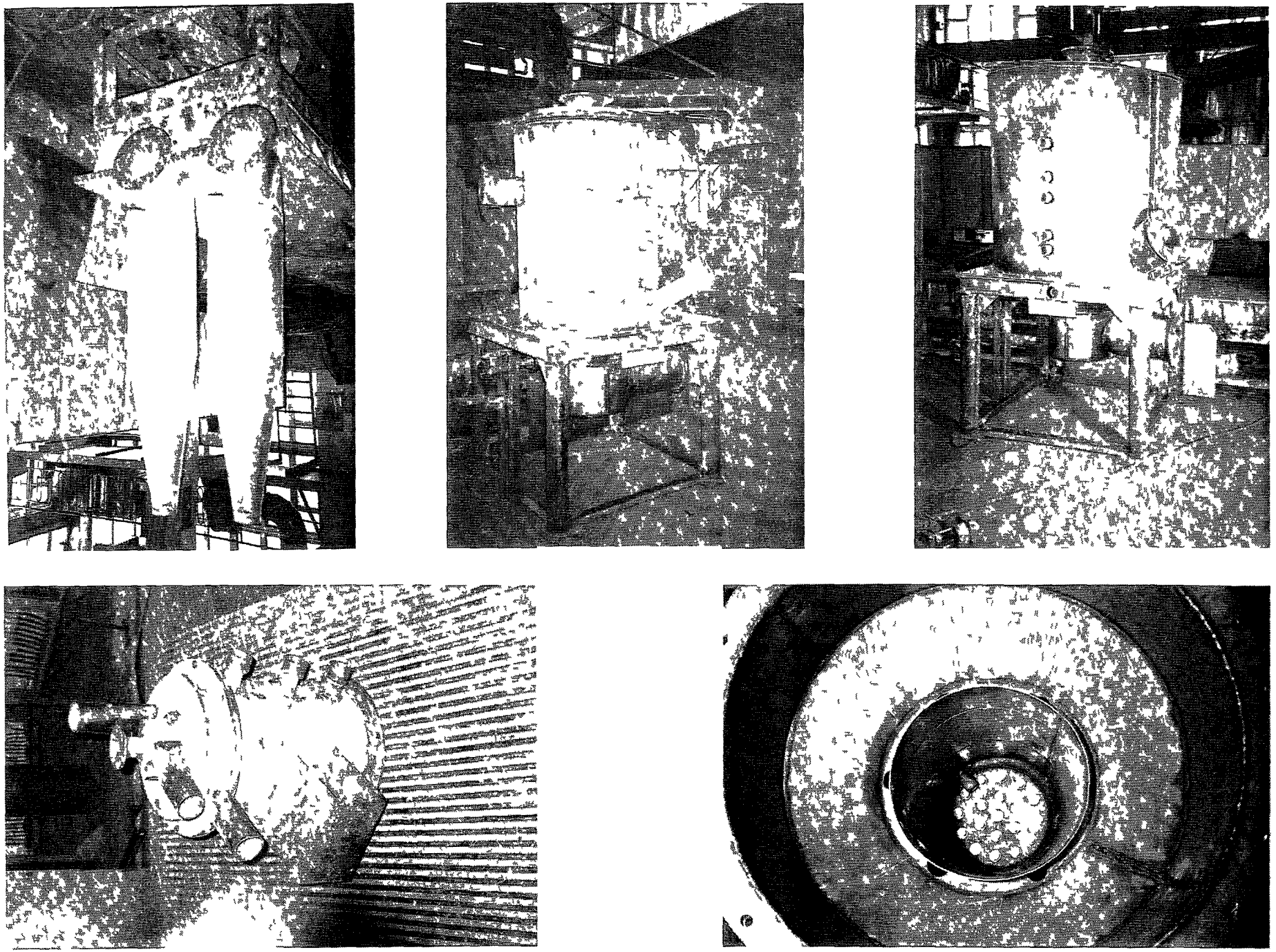

Fig 2 Components of the Reactor

TRANSFER PROCESS IN MULTISOLID TWO-CHAMBER RECIRCULATED REACTOR

Y Goldman A Shavit, Y Dayan
Technion - I I T , Haifa 32000, Israel

ABSTRACT

Prepyrolysis of coal as a precursor to its utilization in a power plant or gas turbine is experimentally investigated The pyrolyzer 800 mm in diameter and 1500 mm in height, consists of two concentric chambers Coarse char particles, used like inert medium ('sand' in the sequel) The char is heated in the outer chamber by an external source of heat, such as hot gases The inner chamber is used for the pyrolysis process of fine coal powder (50 micron), that is fed into it The heat required for the endothermic pyrolysis process is supplied by the circulating char Cold tests conducted on the apparatus indicate that the parameters most influencing solid circulation between the chambers are the aerosol nature of the flow, the sand seals area and the superficial velocity The tests show that the intensive recirculation process exists only under very limited range of flow conditions Outside this range of conditions, sand 'bridges are formed at the seals preventing proper operation These bridges can be destroyed by strong fluidization at the inner chamber wall Results of cold and hot tests, including parametric study of the pyrolzer performance will be presented The feasibility of the suggested scheme for mild gasification of a precursor to its combustion in a power plant will be discussed

INTRODUCTION

It is common practice to burn raw coal in power plants without distinguishing between the char and the volatiles The volatiles may however, be used to produce liquids that are much more valuable per unit of heat value than the coal from which they are made The amount and quality of the liquids as a source for chemical raw material or as fuels and the combustibility of the char are important factors in such a scheme

The purpose of the research is to study the feasibility of incorporating liquid chemical production by low temperature pre-pyrolysis of the coal in a fluidized or entrained bed with a coal burning power plant Liquid matter at rates of about 10%-20% of the coal consumption can be easily produced by means of low temperature pyrolysis The partially devolatized char, which is discharged at a relatively high temperature, can then be burned in a boiler or any suitable combustor

The present research is directed to development of a cost effective process that can be used to partially produce oil from the coal before it is burned in a power plant

A wide variety of reactors with temperatures ranging from 1100 C to 500 C have been employed to carbonize coals These include fixed bed, moving bed, fluidized bed and entrained bed processes A report summarizing the published results (Wotten et al , DOE Report, 1988), contains three significantly different concepts of the systems for low temperature pre-pyrolysis They entail heat transport to the solid matter by a) inner combustion of part of the coal, b) retorting the moving solid and c) mixing a hot char with the raw coal

The aims of the present phase of the research are to complete and expand the early results of experiments conducted at the Technion (Dayan et al , 1993) and to explore the possibilities of using a new multisolid fluidized bed scheme with a two-chamber recirculated reactor

A reactor in which one chamber provides the heat by combustion of char and the second produces the desired effect (pyrolysis, gasification etc) is found to be the most suitable for carrying out such processes One form of a two-chamber reactor was used in the Hebrew University, Jerusalem, where

the goal was achieving high combustion temperatures of oil shales without calcination Another form of a two-chamber reactor was proposed in South Africa by Judd (1986, 1992) for gasification of coal in combination with power generation Early experiments by Judd with a similar apparatus show that high rate of the solid phase circulation may be achieved effectively transmiting the heat with a small difference in temperature, while maintaining good separation of the gases

RESEARCH RESULTS AND DISCUSSION

The detailed goals of the research are a) determination of the effect of prepyrolysis conditions on the quantity and quality of the liquid and gaseous fuel yields, b) determination of flow and heat transfer characteristics in the reactor

The experimental system (Fig 1) includes a 800 mm diameter pyrolyzer of 1500 mm height It is designed for about 100 kg/h raw coal pyrolyzation and provided with a combustor for hot tests Supplying systems include two air fans and a coal feeder Pyrolyzed coal capturing and an exhaust gas cleaning system is based on a bag filtering method Pressure velocity, solid phase recirculation rate air and gas flow rate gages are included in the measurement system A separate experimental rig was used for determination of the gas flow resistance values within a compact bed of the coarse char (sand) These data are important for future design of the double chamber coal gasification apparatus particularly for its sand seal systems

The reactor scheme is shown in Fig 2 It has a cylindrical configuration divided into an inner (right) and an outer (left) chamber

The right chamber produces syngas and char as a result of pyrolysis of the fine coal The process which takes place in a fluidized bed, is supplied with recirculated syngas from the bottom and with circulated hot coarse char from the side The raw fine coal powder is provided to the bed by a feeding system

The left chamber served as a heater for the coarse char A heat source (combustion products) enters the chamber at the bottom and leaves at the upper outlet The process takes place in a packed (moving) bed, that creates a counter-current movement for the solid and gas phase

The first series of experiments were performed on the pyrolyzer model to determine its flow characteristics The gas phase was simulated by cold air from the fans The influence of the bottom pressure (measured at the lowest points of the chambers) on the penetrating air flow rate is presented in Fig 3 It was studied in the flow range, where no fluidization exists within the section of the recirculating bed of the coarse char at the outer chamber The pressure rise at the bottom of the apparatus resulted in a relatively fast air flow rate increase for pressure up to ~ 160 mm w g and in a slowing of the flow increase for the higher bottom pressure in the recirculating bed This behavior is explained by a specific configuration of the bed Its conical shape at the bottom represents the main restriction for the flow until local fluidization in this region begins

The same pressure rise resulted in transferring the regime within the inner chamber from a compact bed to a fluidizing bed The fluidization starts at about a pressure of 160 mm w g, which corresponds to the superficial air velocity of 10 cm/sec Intensive fluidzation with strong bubbling begins at higher superficial velocities and is characterized by the appearance of two zones in the fluidized bed A lower zone of about 300 mm height above a flow distributing grate with a dense fluidizing matter, and a "splash" zone of about 500 mm (total is 800 mm) height with the matter spouting upwards The pressure profile drops abruptly across the dense part of the bed and slowly across the splash zone

It was found that the intensity of the process in the splash zone strongly influences a mass transfer from the inner to the outer chamber of the pyrolyzer The mass transfer process represents a link of the loop in successive processes of the coarse coal circulation It includes upper sand seal penetration downward movement of the bed in the outer chamber and bottom sand seal transport back to the inner chamber A parametric study of the flow and the heat transfer processes was accomplished this year

A packed coal bed resistance to a penetrating air flow is presented in Fig 4a It indicates a linear type dependence between the pressure gradient dp/dx, and the superficial velocity Sufficient difference was found between the resistance to upward and downward flow The last is about 3 6 times higher for the same flow rate, compared to upward air movement This phenomenon is explained by the multisolid nature of the char and creation of some local fluidization of a fine component of the coal located in cavities between the coarse coal particles In our case the coal consisted of 18% of particles less than 0 5 mm diameter (82% between 0 5 and 1 5 mm) By removing the fine matter it was possible to obtain a narrow size particles bed with the same resistance to downward and upward flows, as in curve 1 of the graph (Fig 4a) The results were used for improving the sand seals configuration see Fig 4b, and choosing a preferable gas flow direction there

The influence of the bottom seal cross-section area and the superficial velocity on the rate of the coarse char recirculation is shown in Figs 5 and 6 The results show a relatively limited range of fast recirculation conditions It corresponds to the seal-to-bed cross-section area ratio larger than 4, and to the superficial velocity between 30 cm/sec and 50 cm/sec A reason for this is formation of the char (sand) bridges at the seal and their destruction by intensive fluidization of the char at the inner chamber wall

The degree of bridging or arching in the bulk matter of the outer chamber decreases with increased gas flow This can result in rearranging of the particles, when they become very loose, but yet are fixed in the bed In this condition the recirculation process is very intensive, and it takes place in the

dense configuration at the outer and the fluidized bed at the inner chamber

The hot tests were performed to determine the heat transfer characteristics of the pyrolyzer A liquid spray combustor attached to the outer chamber was used as a heat source for the process It comprised a pressurized spray nozzle, that provided the pulverized fuel for a secondary air flow The formed fuel air mixture entered a sudden expansion profile at the inlet to the hot burning tunnel with a gas ignition pilot burner located at the tunnel outlet A sufficient part of the air was used for cooling the tunnel wall and was mixed with the combustion products at the tunnel outlet This allowed control of the heating agent temperature below the limit preventing undesirable char reduction reactions within the moving bed of the heating chamber

Results of the hot runs are presented in Fig 7 The heating agent temperature T_{in} was changed from 200° to 800° by changing the fuel consumption with the same amount of primary and secondary air It resulted in gradual increase of the temperature in both working chambers The fluidized bed temperature followed by the increase of moving bed temperature at the heating chamber with a difference increasing proportionally to the heating agent temperature

It was found, that heat transfer between the chambers was very intensive The main reason for this is a large overall contact surface between the solid and gas phase in the reactor and fast recirculating of the coarse char The heat transfer per unit of the reactor separating wall between the two chambers reached 40×10^3 kcal/m^2 hr This is several times higher than can be transported by conventional retorting (Zenz and Othmer 1960)

Gas mixing between the chambers depends on the sand seals area and the pressure difference By keeping the last parameter to about 5 mm w g it was possible to restrict the leakage to less than 3% of the total gas flow in the fluidized bed

CONCLUSIONS

The two-chamber reactor concept differs from other known mild gasification systems by entailing heat transport to a raw coal powder by means of mixing a fluidized hot char with the raw coal, which is entrained through the fluidizing bed

The results confirmed the feasibility of the suggested scheme, and indicated a number of changes which were found to be necessary in the pilot apparatus, especially in the coarse coal powder recirculation system to improve the heat transfer rate and the separation of the gases

The cold tests showed that the parameters which most influence the rate of coarse char (sand) circulation are the nature of the flow, the area of the sand seals and the superficial velocity

The hot tests indicate the possibility of sufficient intensification of the heat transport without significant mixing between two gases

ACKNOWLEDGMENT

This research was supported under Grant No TA-MOU-95-CA14-020 U S Israel Cooperative Development Research Program, Center for Economic Growth, Bureau for Global Programs, Field Support and Research, USAID

REFERENCES

Dayan, J , Shavit, A , Gutfinger, C and Shuster, K , "Liquid Fuel from Coal in Conjunction with Power Plant Operation", Int Conf Coal Utilization and the Environment, Orlando, May 17-20, 1993 (being revised for publication in Fuel)

Judd, M R , "The Circulation of Particles in a Horizontally-Configured Fluidized Bed Gasifier", AIChE Ann Mtng , Paper 116q, Miami, FL , Nov 1-6, 1992

Judd, M R and Rudolph, V , "Gasification of Coal in a Fluidized Bed with a Draught Tube", Int Fluidization Conf , p 505, Denmark, May 1986

Wootten, J M Nawaz, M , Duthie, R G , Knight, R A , Onischak, M , Babu, S P and Bair, W G , "Literature Survey of Mild Gasification Processes", DOE Topical Report (DOE/MC24266-2666), 1988

Zenz, F A and Othmer, D F , *Fluidization and Fluid-Particle Systems*, Reinold Pub Corp , New York, 1960

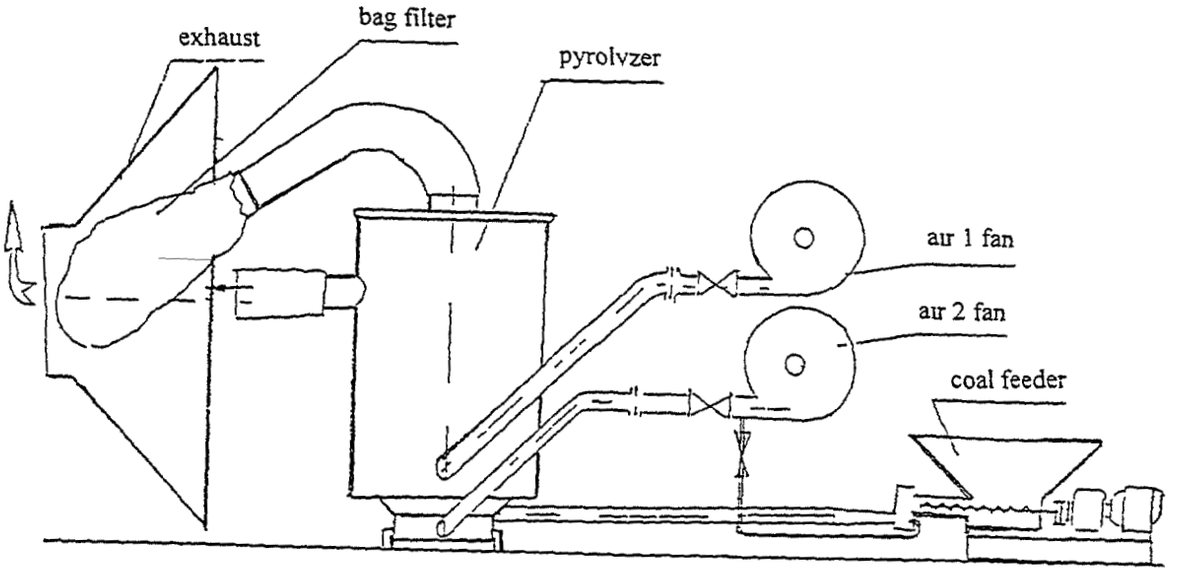

Fig 1 Experimental system for prepyrolysis

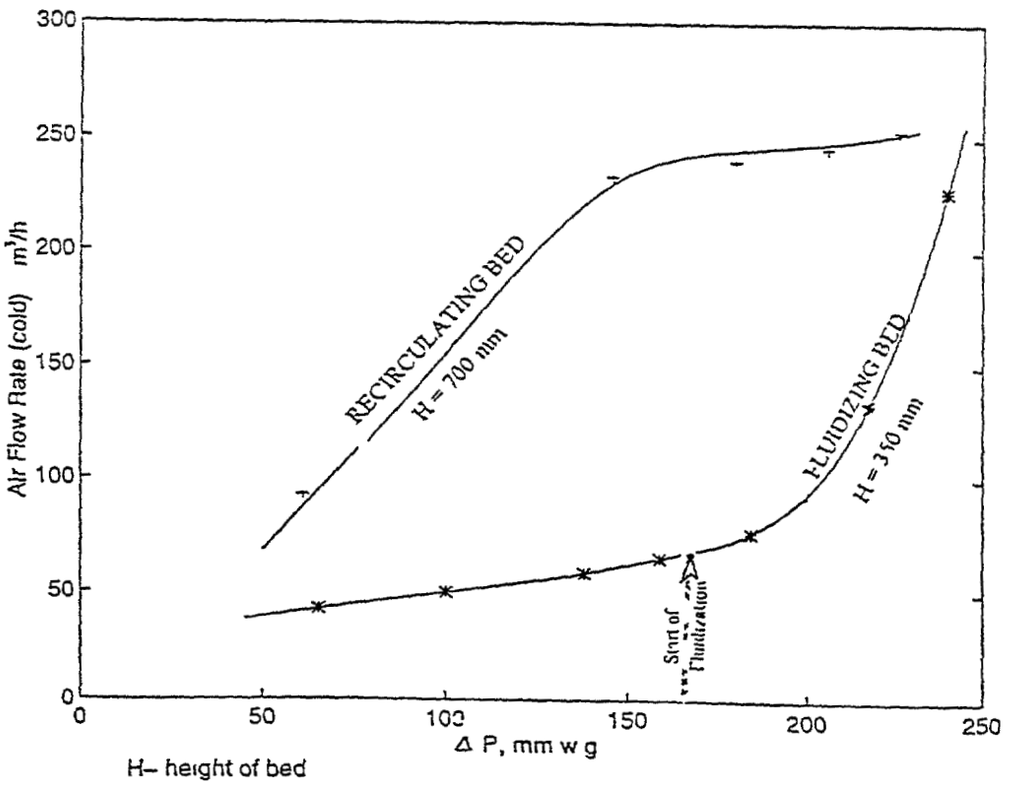

Fig 3 Influence of pressure at chambers' bottom on penetrating gas flow rate

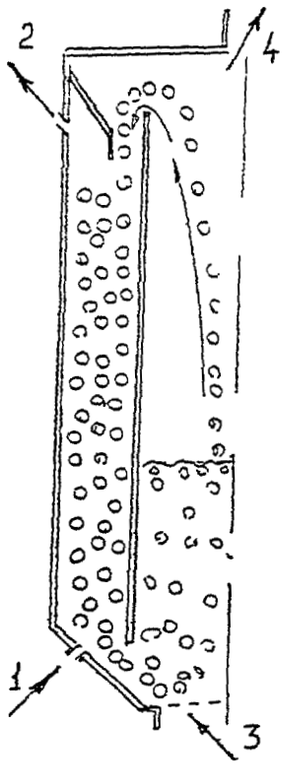

Fig 2 Pyrolyzer schematic

1 Hot combustion products inlet, 2 Exhaust of combustion products, 3 Recirculating pyrolyzed gas inlet, 4 Pyrolyzed gas and char outlet.

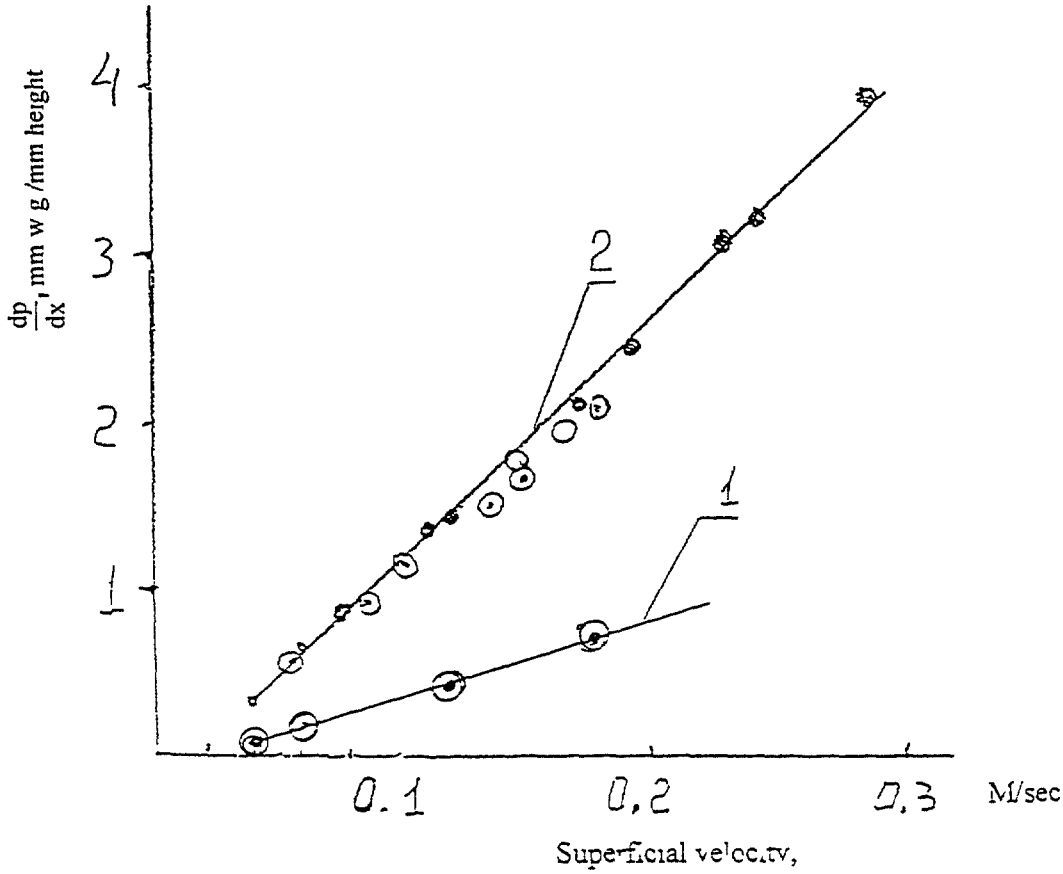

Fig 4 a Packed coal bed resistance

1-upward flow 2-downward flow

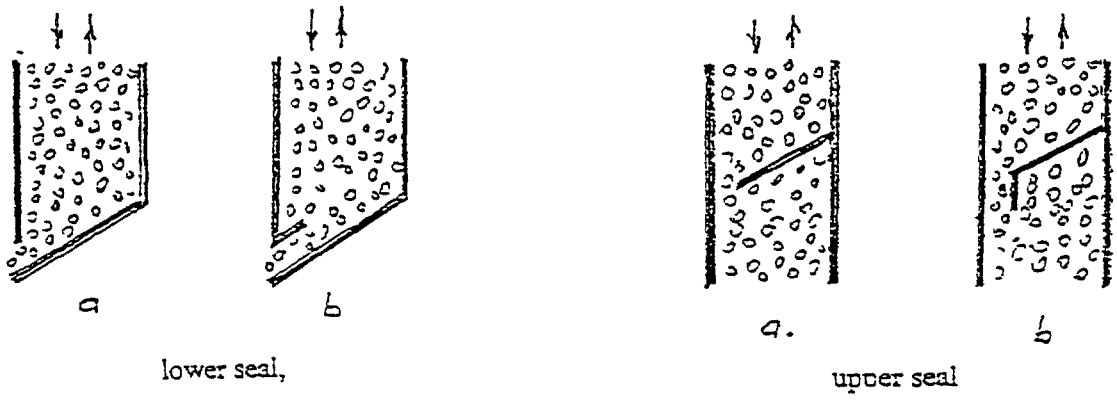

Fig 4b Sand seals a. first version, b improved version

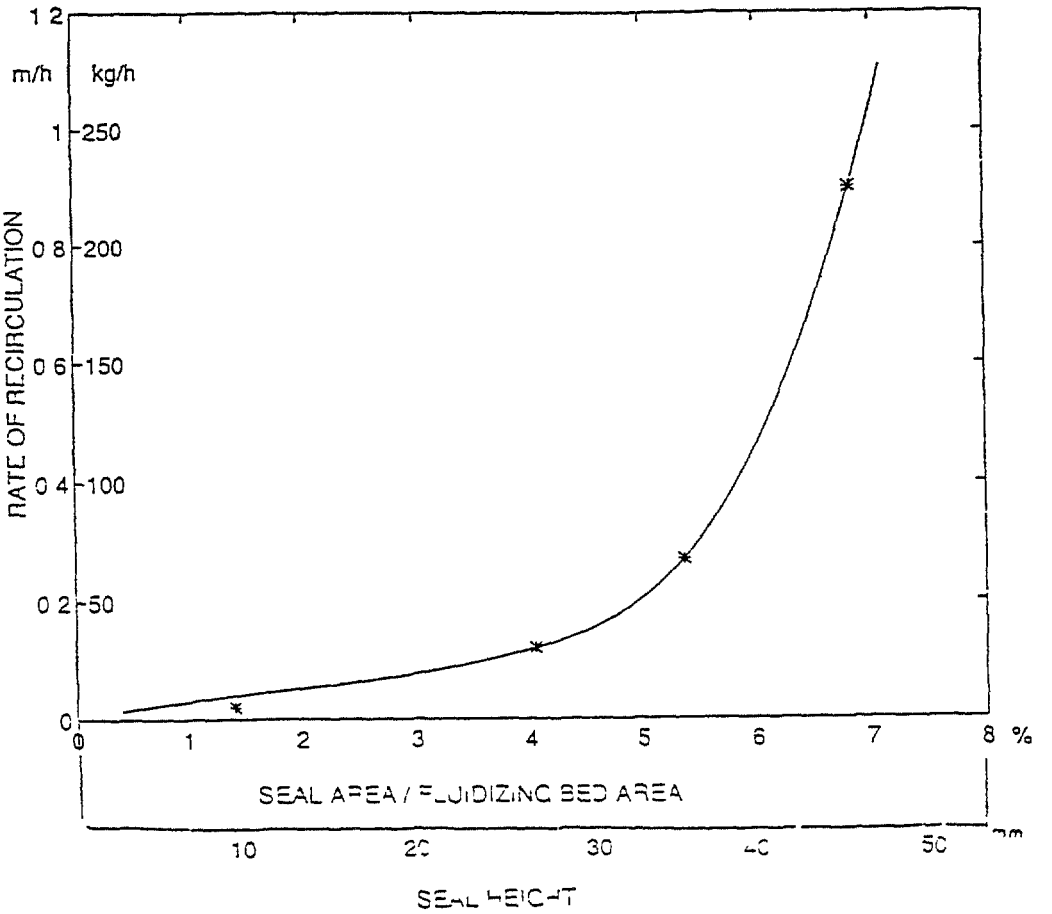

Fig 5 Seal cross-section area influence

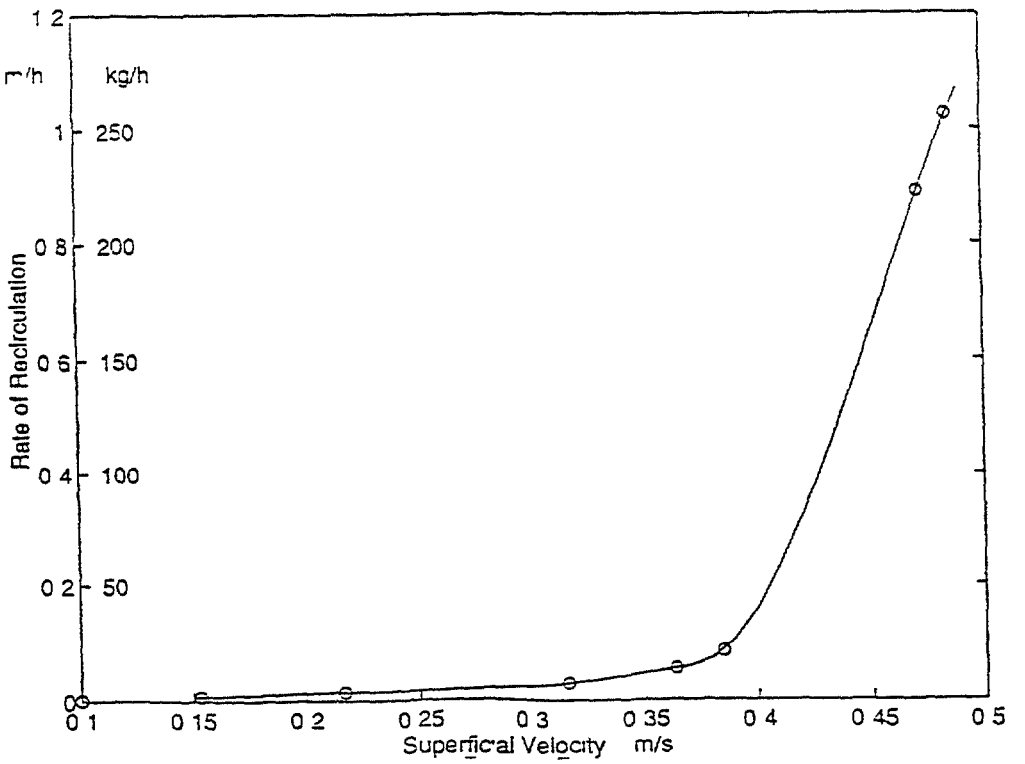

Fig 6 Superficial velocity influence

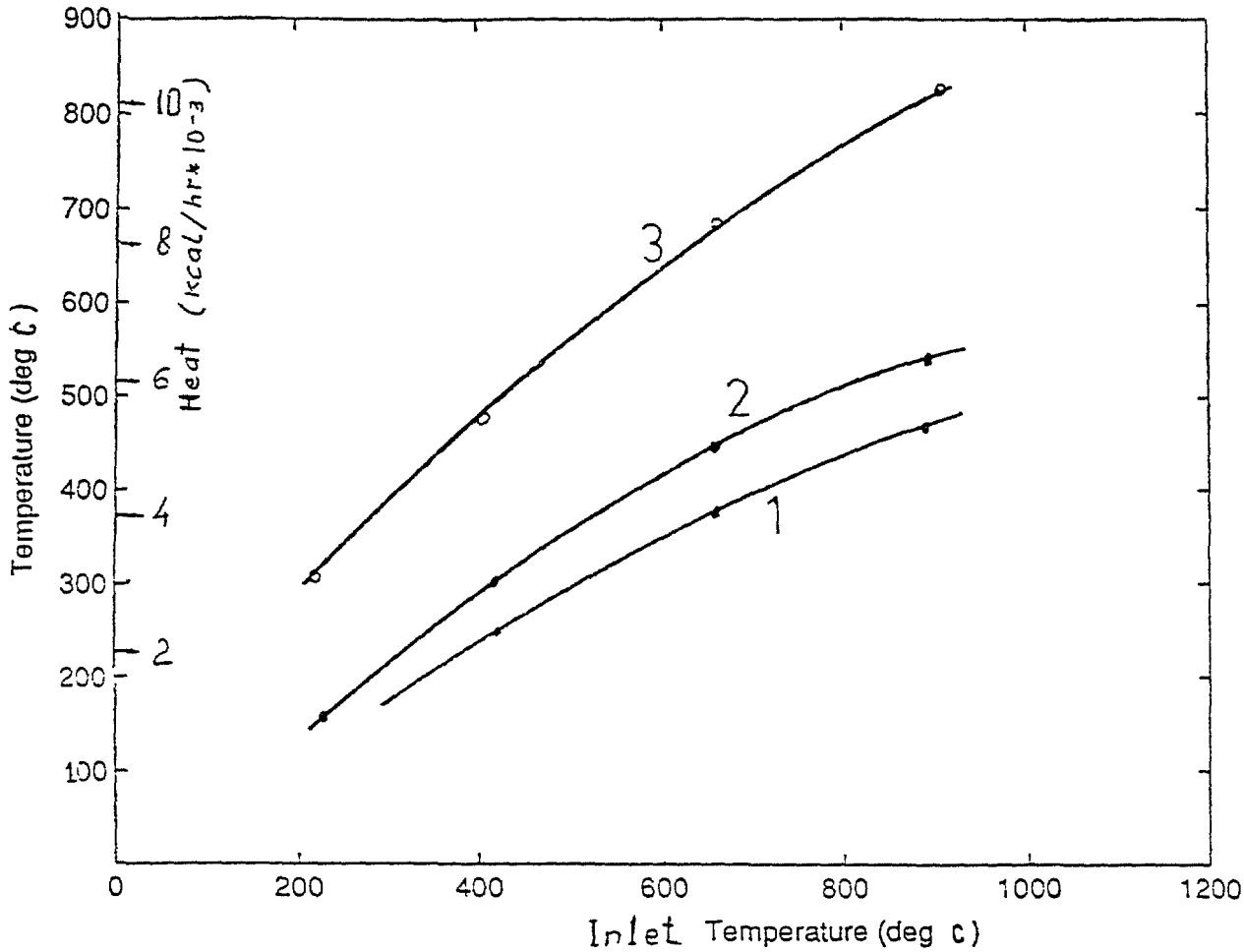

Fig 7 Temperature and heat flow
1 Temperature at top of moving bed, 2 Temperature at middle of fluidized bed 3 Transferred heat, 4 Inlet temperature (deg C)

Development and Study of Mild Coal Gasification Demonstration Plant

M Buchman
Kazakh Institute of Energy, Almati 480012, Kazkhstan

and

Y Goldman
Faculty of Aerospace Engineering
Technion - Israel Institute of Technology, Haifa 32000, Israel

Abstract

The project objectives are to develop and to test some subsystems of a novel cycle of coal utilization, mostly for energy applications

Experimental facilities for mild gasification of coal and for coal combustion under conditions prevailing in gas turbines and for hot ash separation, were erected at the Technion A series of cold and hot tests were performed in the facilities and the results will be reported at the meeting

A gasification scheme was developed and built at the Kazakh Scientific Research Institute of Energetics This facility includes subsystems, sufficient for long term hot investigations of the mild gasification processes and ash separation (see Fig 1) The unit comprises a pyrolyzer (1), a combustion chamber for producing the heating gas (2), a coal dust supply rig (3), a gas cleaning device (4), and a system for oil condensation and circulating the preheating gas (5) The pyrolyzer is based on an innovative scheme of a multisolid double-chamber recirculated reactor with an intermediate heat carrier It includes an inner fluidization chamber of 450 mm diameter, which is arranged in an outer chamber of 80 mm diameter, filled with a coarse powder of sand or char with a particle size of about 1 5 mm The sand is heated in the outer chamber by an external source of heat, such as hot gases The inner chamber is used for the pyrolysis process of fine coal dust, that is fed into it The heat required here for the endothermic pyrolysis is supplied from the outer chamber by the circulated sand

The raw coal dust supply rig comprises a screw feeder and a coal storage tank As a heat generator for the process, it is used as a combination of a combustion chamber a mixer, a fuel source line and an air blower

The gas cleaning is performed in two hot cyclones and the oil condensation takes place in a pipe type heat exchanger provided with a gas recirculation blower and a liquid tar collector

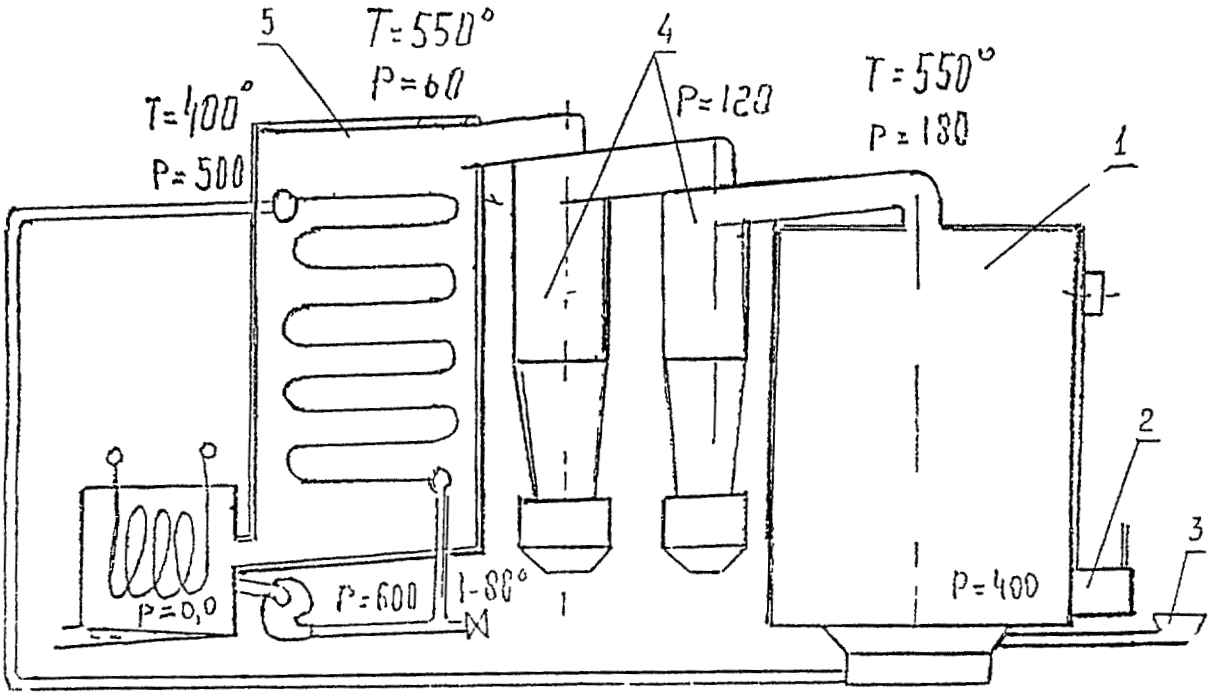

Fig 1 Experimental facility schematic - Kazakh Inst of Energetics

The first series of experiments were performed on the pyrolyzer model erected at the Technion, to determine its flow characteristics This gas phase was simulated by cold air from the fans The fluidization starts at about a pressure of 160 mm w g, which corresponds t the superficial air velocity of 10 cm/sec Intensive fluidization begins at higher superficial velocities and it is characterized by the appearance of two zones in the fluidized bed A lower zone of about 300 mm height above a flow distributing grate with a dense fluidizing matter, and a "splash" zone of about 500 mm height with the matter spouting up The pressure profile drops abruptly across the dense part of the bed and slowly across the splash zone

It was found that the intensity of the process in the splash zone strongly influences a mass transfer from the inner to the outer chamber of the pyrolyze The mass transfer process represents a link of the loop in successive processes of the coarse coal circulation It includes an upper sand seal penetration, a downward movement of the bed in the outer chamber and a bottom sand seal transport back to the inner chamber

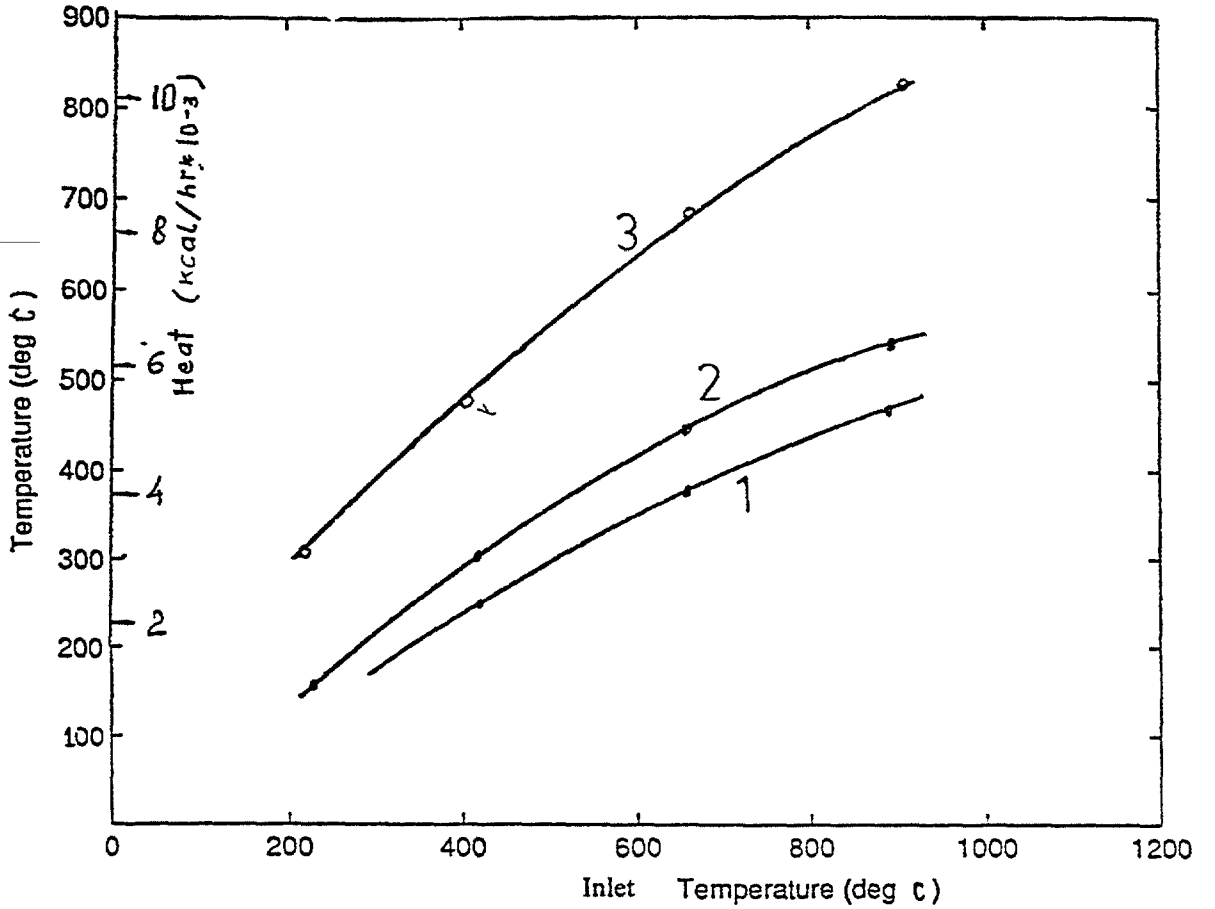

Fig 2 Temperature and heat flow
1 Temperature at top of moving bed, 2 Temperature at middle of fluidized bed, 3 Transferred heat,

Results of the hot runs are presented in Fig 2 The heating agent temperature, T was changed from 200° to 800° by change of the fuel consumption, with the same amount of the primary and secondary air This resulted in a gradual increase of the temperature in both working chambers The fluidized bed temperature is lower than the moving bed temperature in the outer chamber, and the difference increasing proportionally to the heating agent temperature

A parametric study of the demonstration plant in Kazakhstan is planned for the first part of 1998

Acknowledgment

This research was supported by Grant No TA-MOU-95-CA 14-012, of the U S Israel Cooperative Development Research Program, the Center for Economic Growth, the Bureau for Global Programs, Field Support and Research, USAID

Multicyclone Fire Gas Pre-Cleaning in Coal-Fueling Gas Turbine

Y Belilovsky, Y Goldman and A Povitsky
Faculty of Aerospace Engineering
Technion- Israel Institute of Technology
Haifa 32000, Israel

The multicyclone technology directed to applying the device to a power cycle including a coal-fueled gas turbine The coal-ash aerosol deposition is the main difficulty in such novel types of the plants Two specific problems with a suggested power cycle led to development of a new multicyclone design The first is overheating of the flow-twisting vanes of conventional multicyclones located in the central part of the high temperature aerosol stream, the second is the need for additional cooling air to reduce the aerosol temperature below the sticking ash formation point The suggested concept is aerodynamic twisting achieved by means of cooling air jets, dispensing with the vanes Each cyclone of the device represents a straight channel with tangential air inlets on its side walls

The multicyclone assembly was tested in this work Experimental facility comprises a combustor an aerosol channel, a tested multicyclone assembly and an experimental turbine spool The multicyclone stage includes 32 axial cyclones, which are made of a nickel based heat resistant metal They are mounted on an air cooling metal box with twisting nozzles on the front wall The twisting air nozzles are used to cool the exiting air and are directed tangentially to the funnel walls The aerosol inlet funnels are formed by ceramic cast concrete, which coats the front wall and prevents overheating Measurements of the multicyclone performance include aerosol flow rate, particulate matter concentration, twisting air consumption, scavenging percentage and the cleaned aerosol composition and the flow rate

Results of the measurements indicated that the multicyclone efficiency increased with the use of a coarser aerosol For average size particles of 150 microns measured efficiency is about two-three times higher than for particles less than 50 microns The most important parameter of the multicyclone performance is the scavenging percentage It is shown that increase of the scavenging rate from 2 7% to 22% results in a significant increase of the incremental efficiency Application of both parameters- the scavenging rate and the particle size- can provide the separation efficiency asymptotically approaching 100%

Acknowledgment

This research was supported by Grant No TA-MOU-95-CA 14-012 of the U S Israel Cooperative Development Research Program the Center for Economic Growth the Bureau for Global Programs, Field Support and Research, USAID

4 1 Interaction Between Strong Aerosol Jet and Turbine Blade Surfaces

Y Belilovsky and Y Goldman
Faculty of Aerospace Engineering
Technion-Israel Institute of Technology, Haifa 32000

The applicability of protective coatings is related to very high energy density systems operating at high velocities and temperatures These result in small volumes relative to the total energy flux These self-renewing layers are effective as erosion barriers and thermal insulators and allow development of attractive energy technologies in novel engineering regimes For a gas turbine with controlled thermoprotective coatings, the processes of fine particle deposition with heat and mass transfer are part of the main operating conditions Hence, understanding and mathematical description of these processes are necessary

Our experimental facility contains a combustor where gas, diesel fuel and pulverized coal can be burnt Equipped with air and fuel-supply lines A gas turbine unit consists of one-stage gas turbine and air compressor arranged on the same shaft Out door located subsystems are additive supply, fuel and air supply, stack and control panel A liquid additive mixed with kerosene was injected into combustion products' stream in the axial zone of the gas turbine inlet duct The additive was fed through a small nozzle 0 8 mm in diameter It was atomized within hot combustion products' stream, the kerosene component burnt out, additive droplets dried and turned to solid submicron particles of 0 2-0 3 μm in size Coarse ash, soot and unburned coal particles were obtained when burning pulverized coal in the gas turbine combustor Their major part was extracted from the gas products by external cyclone with about 70% efficiency The rest of the particles were carried out of the combustor by the gas stream into the gas turbine inlet The dominant coarse particle size (about 90%) was 20-30 μm

Two kinds of tests were carried out in our work (a) with liquid diesel fuel burnt in the combustor, (b) with pulverized coal High concentration of the submicron particles in gas flow without coarse particles content produced a thick snow-like unadhered deposit on the blades' surface Comparatively moderate concentrations of the submicron particles in the gas flow without coarse particles, lead to a thinner layer with higher adhesive characteristics The same with moderate concentrations of the coarse particles

result in thin two-ply coating with high adhesive characteristics of the inner sublayer

Acknowledgment
This research was supported by Grant No TA-MOU-95-CA 14-012, of the U S Israel Cooperative Development Research Program, the Center for Economic Growth, the Bureau for Global Programs, Field Support and Research, USAID