Delivery order No 30
Industrial energy efficiency in Ukraine
November 1997

PN-ACD-553
99370

REPORT
ON ENERGY AUDIT
AT *YALTA MEAT PROCESSING PLANT*
City of YALTA, UKRAINE

Prepared by Gurvinder Singh
Viktor Svistunov
Vladimir Prokopenko

Prepared for United States Agency forInternational Development
Washington D C 20523-1415

Burns & Roe Enterprises, Inc
140 K Street NW Suite 1050, Washington D C 2005
Telephone 202 408 6831 Facsimile 202-408 6835

REPORT OH INDUSTRIAL ENERGY EFFICIENCY IN UKRAINE
YALTA MEAT PROCESSING PLANT

TABLE OF CONTENTS

PREFACE 4

1 EXECUTIVE SUMMARY 5
- 1 1 Introduction 5
- 1 2 Brief survey 5
- 1 3 Recommendations 6
- 1 4 Operation and maintenance 7
- 1 5 Implementation 8

2 GENERAL/BACKGROUND 9
- 2 1 Enterprise history 9
- 2 2 Recent production 10
- 2 3 Significance of sector for economy 10

3 CURRENT STATUS OF PRODUCTION 11
- 3 1 Total capacity of plant 11
- 3 2 Recent production 1997 vs 1995 & 1996 11
- 3 3 Current trend prospects of development 11
- 3 4 Exports vs domestic production 12

4 FINANCIAL STATUS OF PLANT 13
- 4 1 Currency vs barter 13
- 4 2 Viability of plant 13

5 ANNUAL ENERGY CONSUMPTION & COSTS 14
- 5 1 Annual consumption, 1995, 1996 & 1997 14
- 5 2 Current tariffs for fuel and energy 19
- 5 3 Energy consumption profile 19

6 PREVIOUS ENERGY IMPROVEMENTS 21

7 ENERGY AUDIT 22

8 ENVIRONMENTAL IMPACTS OF RECOMMENDATIONS 25

APPENDICES

A ENERGY CONSERVATION OPPORTUNITIES

B PRELIMINARY SPECIFICATIONS

C INFORMATION FROM EQUIPMENT MANUFACTURERS

D MEASUREMENTS AND DATA COLLECTED

E PHOTOGRAPHS OF PLANT

F CONVERSION FACTORS

G ABBREVIATIONS

PREFACE

As part of Delivery Order #30, Industrial Energy Efficiency - Ukraine, the U S Agency for International Development (***USAID***) sponsored energy efficiency audits at 24 industrial plants that met the criteria of ***USAID***

Each facility was evaluated based on selection criteria (approved by ***USAID***) for the selection of target plants The criteria included a long-term economic viability of the plant, its financial condition, its generation of export revenues, production output versus nominal capacity, energy conservation potential, possibilities of project replication at similar enterprises and its access as a demonstration facility to other plants

This report details the findings of ***BURNS & ROE ENTERPRISES, Inc*** energy report performed at the Yalta meat processing plant

1. EXECUTIVE SUMMARY

1.1. Introduction

The Yalta meat processing plant is a modern dynamically growing enterprise and one of the largest in its sector in the Autonomous Republic of Crimea

Orientation at the continuous renovation of products and search for new technologies allow the plant to increase production annually and consistently produce the output of guaranteed quality

This energy audit has been conducted under the Industrial efficiency in Ukraine technical assistance program sponsored by the US Agency of International development referred as Delivery Order #30

This project consisted of performingtwenty four audits of industrial enterprises in Ukraine The purpose of the projectwas to develop Ukrainian energy service company (ESCO) capabilities To accomplish this task Burns and Roe Enterprises, Inc (the primary contractor) hired Ukrainian engineers These engineers were trained in U S techniques of conducting energy audits and ESCO concepts The industrial energy audits were conducted to facilitate the ESCO training

An energy audit team made up of one US expert and two Ukrainian engineers carried out energy audit November 24 through 28, 1997 in compliance with the objectives of the project and prepared the report

Since these industries are very large a one week site visit is not sufficient to adequately audit the entire facility In many cases it was necessary to focus auditing efforts on one system or only a portion of the entire plant Therefore, this audit is based on what could be accomplished during one week allocated While this audit contains numerous recommendations for the plant management, the plant management is encouraged to perform a complete audit of the entire facility Hopefully, the plant management will consider hiring the engineers trained under this project to continue this work, which will result in a complete understanding of energy usage within the plant, as well as a complete listing of all potential energy improvement projects

1.2. Brief survey

- Yalta meat processing plant is functioning stable by Ukrainian standards
- As expected, the audit group found a lot of attractive opportunities for improvement of the energy efficiency at current energy prices When the energy prices were 20 to 30 times lower, energy efficiency improvements were uneconomical Today energy efficiency improvements make sense, but they are difficult for accomplishment due to exorbitant interest rates and distortions in economic incentives caused by the bartering system and mutual non-payments
- In total energy costs used by the plant steam makes up over 50% and out of total electric power use over 70% are used for refrigeration These directions of energy use determine primary sources of energy savings
- Absence of energy submetering prevents institution of the basis for energy conservation and introduction of the energy management system
- A major energy savings opportunity is the increase of efficiency of steam use in thermal treatment units and by improving thermal insulation of steam and condensate pipelines
- Reduction of electric power use can be achieved through efficient generation and use of cooling and automatic control of cold storage room temperatures

1.3. Recommendations

Recommendations listed in the report will improve energy efficiency of the plant, reduce the costs and consolidate competitiveness of the enterprise In the table 1 1 below several Energy Conservation Opportunities (ECO) with short-term payback are described as well as estimates of reduction of cost and simple payback of measures with implementation terms of less than one year For example, ECO #1 "Energy management"will institute systematic activities of energy management for which purpose an energy management section will be established responsible for the analysis of the energy consumption at the plant and for working-out of recommendations of renovation and improvement of any systems resulting in energy savings

In order to improve energy efficiency and to reduce energy costs the USAID will provide equipment for energy audits This equipment consists of portable instruments and meters for performing energy audits

ECO #2 "Replacement of steam traps in the steam consuming systems" will reduce steam consumption without deteriorating thermal specifications of the equipment with concurrent improvement of of its thermal potential use in the thermal treatment chambers and in fat extraction unit

ECO #3 "Condensate recovery from thermal treatment chambers" will reduce natural gas and expensive chemically treated make-up water consumption by installation of steam-driven pump for condensate pumping from sausage cooking unit to the boiler house

ECO #4 "Thermal insulaion of steam and condensate piping" will reduce direct heat losses at the sections of 637 m long

ECO #5 "Improvement of combustion efficiency in the DKVR-2 5-13 boilers" will boost combustion efficiency in the boiler by optimization of natural gas firing and, consequently, reduce gas consumption

ECO #6 "Energy efficient lighting of the plant" by installation of 171 energy efficient lighting fixtures instead of DRL-400 and incandescent lamps of the plant lighting system will improve reliability and save electric power

Table 1 1 List of energy conservation opportunities (ECO)

ECO #	Description	Electricity savings 1 000 kWh	Natural gas savings 1,000 m³	Water savings 1 000 m³	Annual savings $ (1997 prices)	Project cost, (1997 prices)	Simple payback years
I	Energy management	104 0	72 0	3,000	8 000	14,200	1 8
II	Steam trap replacement		38 9		3 200	2,640	0 8
III	Recovery of condensate		26 6		1,410	5,700	4
IV	Condensate piping insulation		120 9		6415	9,500	1 5
V	Improvement of combustion efficiency in DKVR-2 5-13 boiler		25 43		2 110	6,500	3
VI	Energy efficient lighting of the plant	43 5			1,915	2 150	1 2
VII	Total	147 5	283 8	3 000	23 050	40,690	

Capital investment to the amount of US$2,640 into energy efficiency improvement with short-term payback (ECO # 02) will lead to annual savings of US$3,200, reduction of natural gas use by 38 9

thousand cubic meters Investment of US$38,050 into energy efficiency with payback periods of more than 1 year (ECO # 01, 03, 04, 05, 06) will lead to annual savings of US$19,850 and will cut down electric power use by 147 5 thousand kWh, water use by 3,000 cubic meters and natural gas use by 244 9 thousand cubic meters

Total reduction in electric power use will be at 147 5 thousand kWh (16% of the 1996 use), water 3,000cubic meters (10%) and in natural gas at 283 8 thousand cubic meters (40%)

Total reduction of emission of hazardous substances due to implementation of the proposed measures will be 2 68 tons including 0 65 ton of solid particles, 0 11 ton of carbon oxide, 0 46 ton of nitrogen oxides, 1 46 tons of sulphur oxide

The ECOs above can be implemented at variuos industrial enterprises i e serving as the standard solution of a common problem

1.4. Operation and Maintenance

It is typical for industrial plant management to mainly think in terms of production, and to want to increase output Therefore it is sometimes difficult to think of the importance of energy and energy costs on the operation of the plant

For the Yalta Meat Processing Plant as with most industries in Ukraine previously energy costs made up an insignificant share in total production costs, hence the energy was not a major consideration in plant operations

With the rising energy costs over the past few years, energy costs have now become very significant For Yalta Meat Processing Plant, energy costs are now about five percent of the cost of production

While energy and energy costs are now well understood by the Yalta Meat Processing Plant staff, there is the tendency to think mainly of having to implement large projects with the intent of saving large amounts of energy This is unfortunate since many small energy saving projects exist that have very good payback periods

But it is common to ignore these since the savings per unit might be low For instance, the installation of steam traps might not seem as attractive as installing a large project such as ammonia compressor room modification But these small projects are very important, and when the total number of steam traps is considered, the total savings resulting from this item is very significant

Most industries in Ukraine have a person or persons who are referred to as energy engineers These specialists are responsible for uninterrupted energy supply of necessary quality and amounts to production lines, and ensuring energy savings However, due to cuts in production costs typically the specialists of auxiliary services are the first to be laid off, energy supply service included This results in remaining specialists mostly tackling not the energy efficiency issues at their plants but ensuring that there is adequate supply of energy But with the rise in energy prices and the uncertainty of availability of all fuels, an energy manager to conserve energy becomes important Each plant should seriously consider establishing an energy manager position as a minimum, and for large industries, possibly even an energy management section

These people should routinely be monitoring all operations, and especially reviewing monthly energy consumption This monthly data should be graphed and compared to previous months and years to determine any variations in consumption, identify causes of them and make decisions on the necessary energy consumption remedial measures to prevent unreasonable energy use For instance, if monthly consumption increases, the reasons why should be determined and if appropriate, steps taken to correct any problem

In addition, the energy management staff should also review each process, and look for energy saving opportunities, certification of technologies and equipment for energy efficiency They should see that all cost effective energy improvements are implemented, beginning with items identified in

this energy audit They should then also have responsibility to review all proposed changes to the facility to ensure that each process is as energy efficient as possible

It would be good to have a thermal specialist (someone who is knowledgeable about steam, refrigeration, hot water, and natural gas systems) and an electrical specialist

In many facilities the energy management section is assigned an energy goal, such as "reducing the overall energy usage by five percent per year" While the percentage goal can vary, this type of challenge industries gives a benchmark by which the section can be evaluated And in industries in Ukraine, where energy efficiency is just at its infancy, the percentage goal could even be higher Some industries also have an incentive program, in which employees are encouraged to submit energy efficiency improvement ideas These ideas, if accepted and implemented, would result in a small reward being given to the employee

1.5. Implementation

Implementation of ECOs listed in the table is planned following completion of regular phases of the project in accordance with Attachment A to the Memorandum of Understanding of February 19, 1998

2. GENERAL/ BACKGROUND

Name - Open joint-stock company "Yalta meat processing plant"
Managing director - Adam Abuseinovich Dadayev
Chief engineer - Alexander Vladimirovich Pushin
Phone No (0654) - 34-70-49, 34-73-62
Fax No (0654) - 34-70-50
Mail address UKRAINE 334233 Yalta, Isobilna str 1

2.1. The enterprise history

The Yalta meat processing plant enterprise was commissioned in 1966 The primary activities comprise the following purchase and slaughter of cattle, production and sales of sausages and meat products The enterprise covers the area of 1 8 hectares In 1994 the enterprise was converted into an open joint-stock company with collective form of ownership The stock capital ownership as shown in the Table 2 1

Table 2 1 Ownership of capital and distribution of stock

Name of stockholder	Value, in thousands of hrivnias	%
Statutory capital, including	1 841 75	100
• Property of the labor collective	1 362 9	74
• Property of legal bodies - agricultural producers	331 51	18
• Property of natural persons	147 34	8

Presently there are no joint ventures with foreign companies though an active effort is applied in this direction

There are the following buildings and constructions within the territory of the enterprise

- the main processing building comprising the following,
- sausage workshop,
- culinary workshop,
- fat extraction workshop,
- delivery unit,
- ammonia compressor room,
- personnel private premises of the plant,
- boiler house,
- electric and mechanical workshop,
- specialized workshop with a slaughterhouse,
- office (administrative) building,
- motor transport maintenance workshop,
- wastewater treatment facilities

Organizational structure is shown on Fig 2 1

The capital assets after 30 years of operation possess a significant degree of wear and require capital overhaul which is gradually being carried out by the enterprise

2.2. Recent production

Currently the primary activities of the enterprise are the following

- purchase and slaughter of cattle,
- production and sales of sausages and meat products,
- organization of wholesale, retail and proprietary trade

The enterprise supplies commercial networks of Yalta and Autonomous Republic of Crimea with the following fresh meat, boiled, dried and smoked sausages, smoked and dried ham, bacon and pork, pre-processed meat, ground meat, food fats The republican enterprises are supplied with technical-purpose fats, bone meal

The enterprise carries out reorientation of its production by reduction of boiled sausages output and increase of output of smoked and dried sausages and other meats with longer shelf life for delivery to other parts of Ukraine

The enterprise owns three specialized stores

Average number of the plant employees is 260

2.3. Significance of the sector for the national economy

The plants of similar sector exist in almost all regions of Ukraine Total number of them is around 2300 including 9 large meat processing complexes producing meat products and sausages There are 7 similar enterprises in the Autonomous Republic of Crimea

The enterprise has an insignificant share of output volume within Ukraine, however, for the Autonomous Republic of Crimea it has a substantial importance since it is currently one of the two plants of the same sector which operate and meet the needs of the republic in sausages and meat products at the peak of the vacation season

3. CURRENT STATUS OF PRODUCTION

3.1. Total capacity of plant

The design capacity of the enterprise ensures output of 30 tons of sausages per day or 10 000 tonnes per year

3.2 Recent production: 1997 vs. 1995 and 1996

In 1995-1997 the enterprise operated at reduced capacity due to the fall of the purchasing power of the population and the impact of the seasonal factor Thus during summer vacation season (June-August) production output rises threefold in comparison with the winter months Output volumes are given in Table 3 1

Table 3 1 Production output

Item	Unit	1995	1996	1997	% 1996 to 1995
1 Slaughtered meat	tonnes	147	368	193	250
2 Sausages	tonnes	1404	1262	683	90
3 Pre-processed meat	tonnes	286	131	39	46
4 Food fats	tonnes	25	38	16	132
5 Bone meal	tonnes	118	102	64	86 4
6 Production output - total	thou of hrivnas				
- at current prices		4959 7	7067 3	4076 6	-
- at comparable prices		6434 0	6302 8	3832 6	98

The analysis of the data from the table shows that the absolute production output in 1996 as compared to 1995 were as follows slaughtered meat - 250%, sausages - 90%, pre-processed meat - 46%, food fats - 132%, bone meal - 86,4%, production output at comparable prices - 98% Average monthly output in 1997 as compared to 1996 have a tendency toward reduction and are correspondingly as follows 69 7, 72 2, 39 4, 56 2, 83 6, 81 1%%

3.3. Current trend: prospects of development

Marketing, production and technical services of the plant carry out work for the future development of the plant

The enterprise solves the problems of the sales market expansion by opening two specialized stores outside the city of Yalta, reconstruction of the main production building is underway, new high-output equipment is bought, in particular, sausage clipping and other machinery of German and Austrian manufacture have been bought and installed In 1997 for the purposes of reconstruction and purchasing of new equipment US$ 300 000 were invested Production units of the plant in cooperation with the Hungarian investors work on production of Salami sausages All this points at the fact that the plant sees its own prospects of development and considering improvement of social and economic situation in the Autonomous Republic of Crimea and development of recreational business it is able to sharply increase the product output

3.4. Exports vs. domestic production

and economic situation in the Autonomous Republic of Crimea and development of recreational business it is able to sharply increase the product output

3.4. Exports vs. domestic production

The Yalta meat plant does not carry out export operations

4. FINANCIAL STATUS OF PLANT

4.1. Currency vs. barter

The Yalta meat processing plant does not carry out barter operations Payments in hard currency only for imported equipment

4.2. Viability of plant

Primary financial results are shown in Table 4 1 Their analysis shows that net profit in 1996 larger than in 1995 by 24 7%, gross income is also growing

Table 4 1 Primary financial results in mln Hr

Indicator	1995	1996	1997 (9 months)
1 Gross income	5 928	6 606	5 341
2 VAT (20%)	0 992	1 094	0 794
3 Production costs	4 294	4 711	4 045
4 Pre-tax profit	0 642	0 801	0 502
5 Actual production output	3 244	6 703	4 451

The data in Table 4 1 show that in 1996 as compared to 1995 gross income grew by 111 4%, production costs by 109 7%, actual production output by 206 6% that in comparison with the data from Table 3 1 characterize general decline of production output in physical terms and given profit increase by 40 3% they allow us to draw the conclusion of significant impact of the 1996 indexation (reassessment) of capital assets on the financial results of the plant

Confirmation of this is the change of residual cost of capital assets given in the statistical report by the form 1"The balance of enterprise as of 01 01,1997" (line 010) where it is shown that as of January 1, 1996 the cost was Hr 575295 and as of January 1, 1997 it was Hr 3624075 i e it rose 6 3 times

Average monthly indicators of 1997 as compared with the ones of 1996 are respectively as follows (according to the items of Table 4 1) item 1 - 107,8%, item 3 - 115 2%, item 4 - 83 3%, item 5 - 88 5%

The values of cost indicators of 9 months of 1997 can de explained by taking into account production output decline in physical terms over the same period as compared to 1996 (see Table 3 1), general stabilization of the national currency and certain growth of production of a range of better quality and higher-priced output

Hence, different cost bases in 1995, 1996 and 1997 do not allow us to objectively view relative efficiency of operation per each year Certain evaluation can be made by plant viability indicators in Table 4 2 which contains satisfactory values of stable financial situation of the plant over the studied period

Table 4 2 Indicators of financial stability

Indicator	1995	1996	1997 (9 months)
1 Profitability %	13	16	11
2 Liquidity factor	2 44	3 86	3 39

The plant has no debts

All incoming and outgoing bills are collected each year and kept in the books

5. ANNUAL ENERGY CONSUMPTION AND COSTS

5.1. Annual consumption, 1995, 1996 & 1997

The basic types of energy used at the Yalta meat processing plant are electric power, natural gas and potable water purchased from the utility organizations Thermal energy is generated as saturated steam at 6 kg/cm^2 pressure by the in-place boiler house equipped with two DKVR-2,5/13 boilers The breakdown of annual consumption and costs of these energy sources is shown in table 5 1 below Electricity and natural gas make up 73 9 percent and 26 1 percent of the total energy used by the plant However, the share of costs is different electricity - 38%, natural gas - 50%

Table 5 1 Total Energy Use by Energy Source and Cost (Based on 1996 Data)

Energy	Annual Use	Annual Use in GCals	Share of Energy Use, %	Annual Cost, US$	Share of Annual Cost, %
Electricity	1,081,400 kWh	930	22	47,822	38
Nat Gas	750 9 thousand cu m	3290	78	62,374	50
Water	29,543 cubic m	-	-	14,772	12
Total	-	**4,220**	**100**	**125,028**	**100**

Fig 5 1 shows distribution of energy use by types of energy carriers The breakdown of annual energy consumption and costs is shown in Fig 5 2 through 5 4

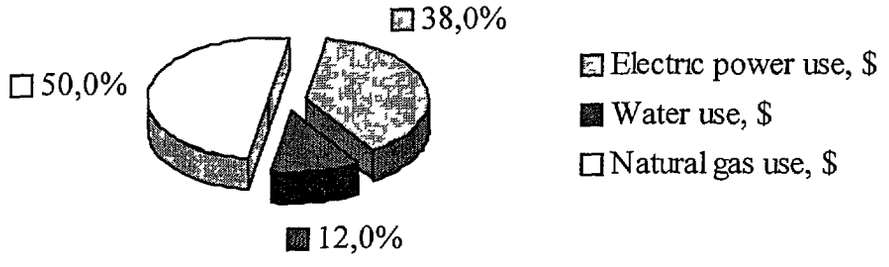

Fig 5 1 Distribution of energy costs in 1996

Energy use in Yalta meat plant in 1996 and 9 months of 1997

	Electricity use, kWh		Natural gas use, 1000 m^3		Water use, m^3	
Month	**1996**	**1997**	**1996**	**1997**	**1996**	**1997**
January	77,703	73,504	79	44	2,380	1,034
February	71,615	60,497	63	45	2,394	1,875
March	48,215	54,837	52 5	43	2,387	1,680
April	77,693	78,100	53	38	2 385	1,457
May	83,695	82,837	47	32	2,389	1,363
June	97,836	92,689	45	36	2,387	1,790
July	115,840	107,187	69 8	42	2,690	1,725
August	148 725	116,765	80 4	35	2,800	1,915
September	107,740	99,004	83 3	34	2,550	1,675
October	87,763	80,723	76 9	32	2,506	1,775
November	87,005		51		2,405	
December	77,585		50		2,270	
Total	**1,081,415**		**750 9**		**29,543**	

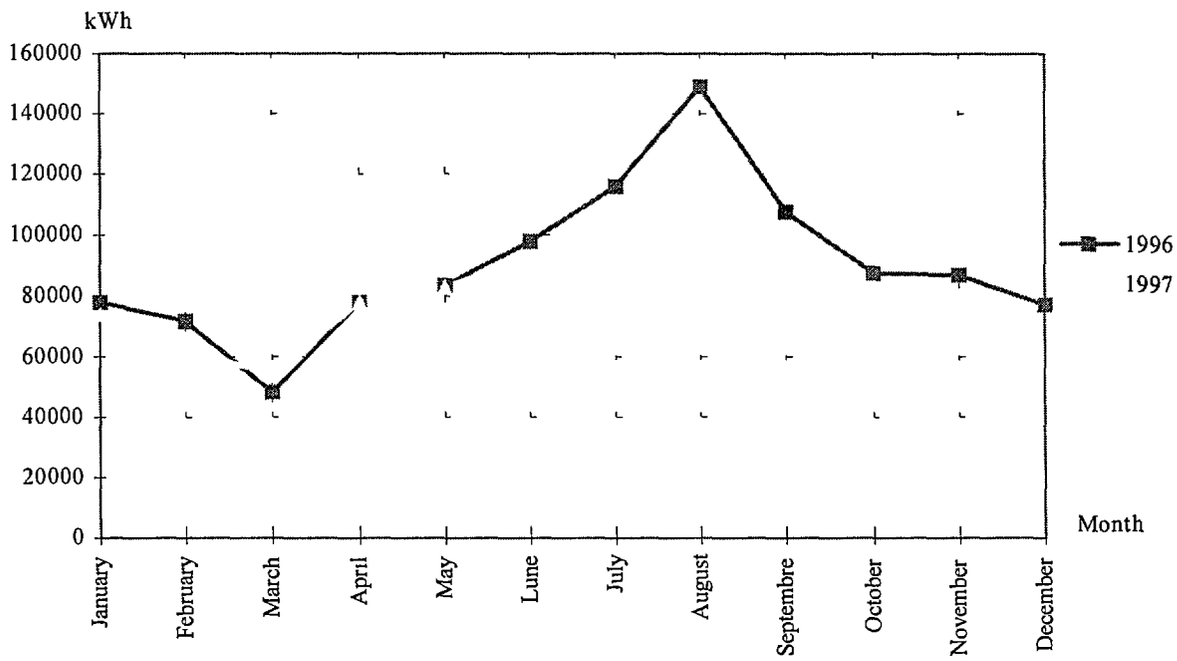

Fig 5 2 Electric power use, kWh

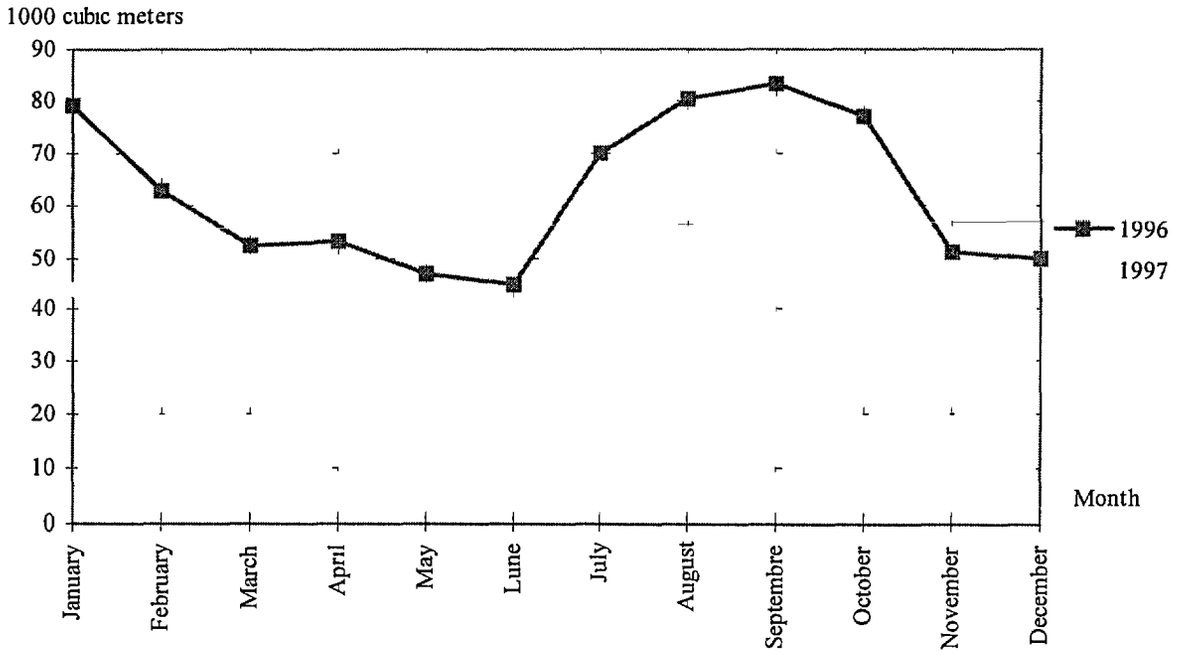

Fig 5 3 Natural gas use, thousands cu m

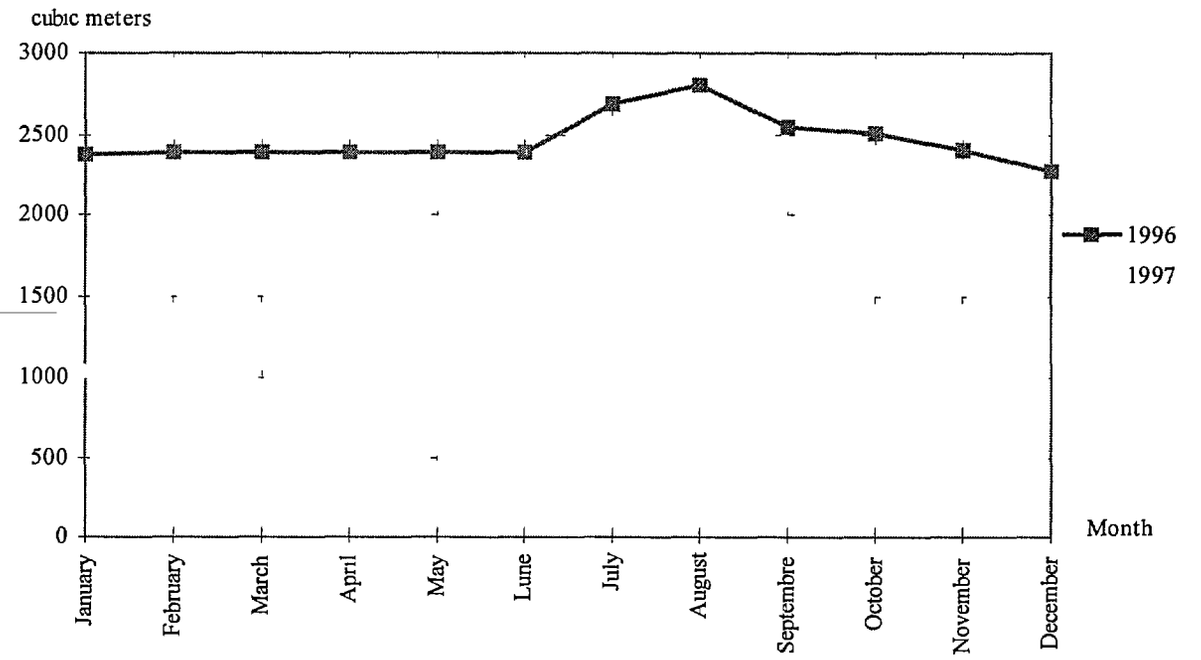

Fig 5 4 Water use, cu m

The total consumption of electricity in 1996 was thousand 1,081 kWh, while natural gas consumption was 750 9 thousand cubic meters and water - 29 5 thousand cubic meters The peak production period is June through October The maximum natural gas use both in 1996 and 1997 occurred in the peak production summer months and in September 1996 it was 83 thousand cubic meters The peak natural gas and water consumption does not occur during any one month in the summer but varies each year depending on the delivery of meat

Electricity consumption is strictly varied by the month with the evident maximum in August (in 1996 the August consumption was 148 7 thousand kWh and in 1997 it was 116 8 thousand kWh) The connection above is driven by the refrigeration needs in the plant According to the plant statistical data 82 percent of the total electricity use were taken up by the refrigeration plant

equipment As seen from Fig 5 2 the refrigeration load is driven basically by the climatic conditions of Crimea since the cold storage rooms are also used for keeping the products of outside customers

The natural gas consumption is driven by the steam demand of production units Annual consumption of thermal energy in 1996 was 3,290 Gcal and 1,620 Gcal over 9 months of 1997 With the purpose of cost-efficient running of the boiler unit the maintenance organization has test-fired the boilers and worked out operation charts according to which specific use of fuel at the nominal firing mode is 143 78 cubic meters per Gcal The analysis of the data of Fig 5 5 and 5 6 shows that actual specific use of fuel was 228 2 cubic meters per Gcal in 1996 and 236 4 cubic meters per Gcal in 1997 which can be explained by frequent startups and shutdowns of boilers and inefficient running at the lowered pressure of 6 kg/cm^2

Year	Production consumption, tce	Thermal energy production, tce	Other production consumption, tce
1995	657	432	225
1996	719	590	129
1997 (9 months)	347	287	60

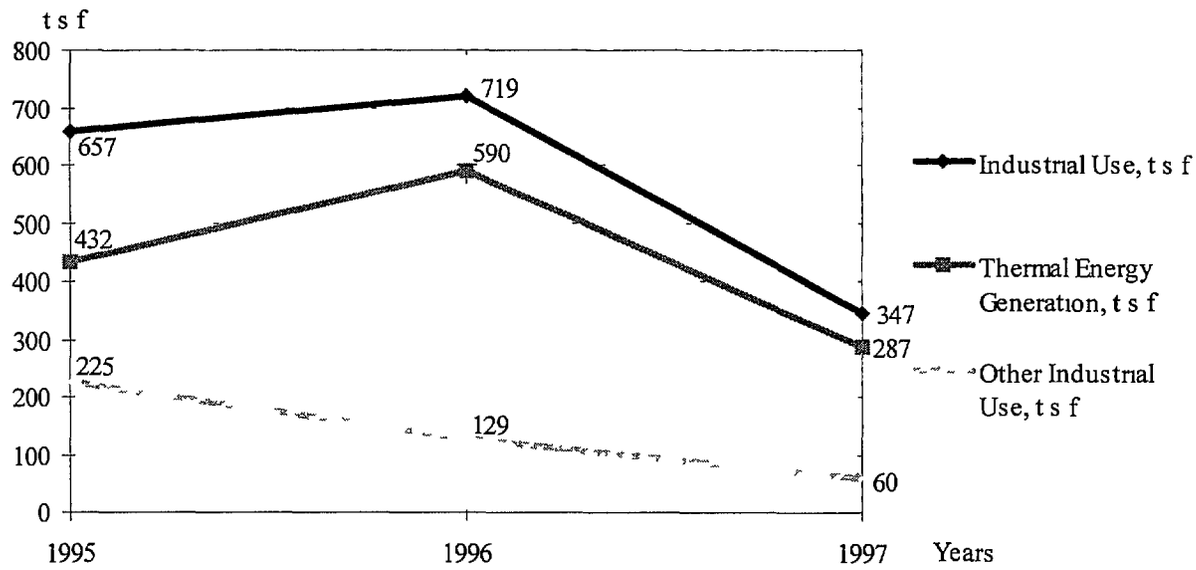

Fig 5 5 Dynamics of natural gas use by types of production

Year	Production consumption, Gcal	Sausages, Gcal	Meat and by-products, Gcal	Other production consumption, tce
1995	2,380	1,478	110	792
1996	3,290	1,329	366	1,595
1997 (9 months)	1,620	1,100	92	428

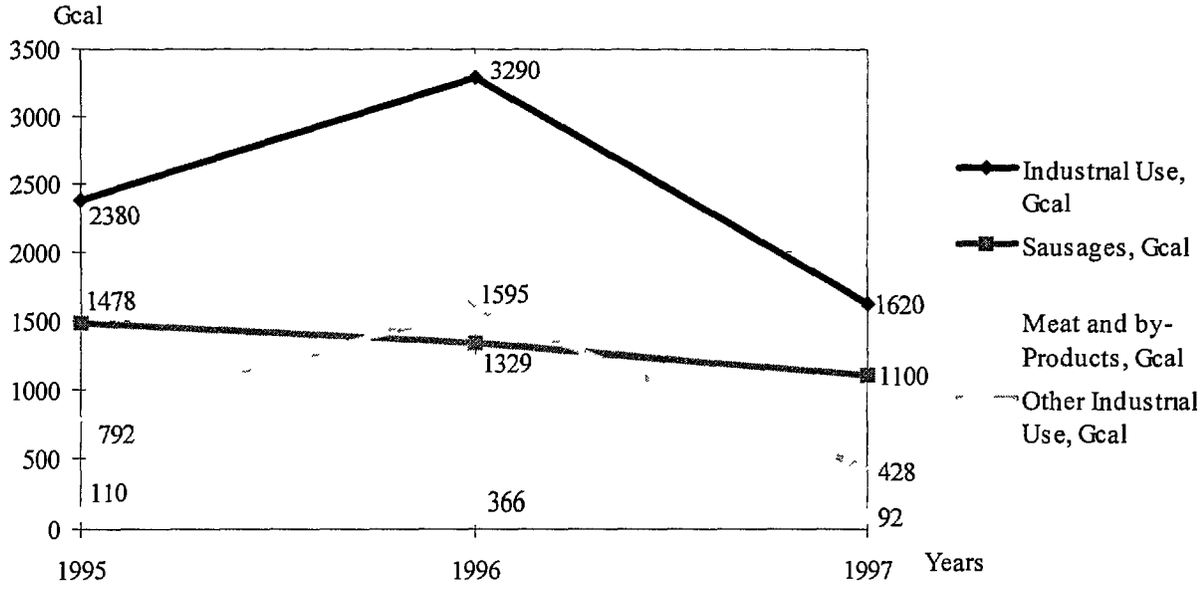

Fig 5 6 Dynamics of thermal energy use by types of production

Year	Production consumption, kWh	Refrigeration, kWh	Sausages, thou kWh	Thermal energy production, thou kWh
1995	1,072	926	85	40
1996	1,040	852	76	54
1997 (9 months)	687	591	59	35

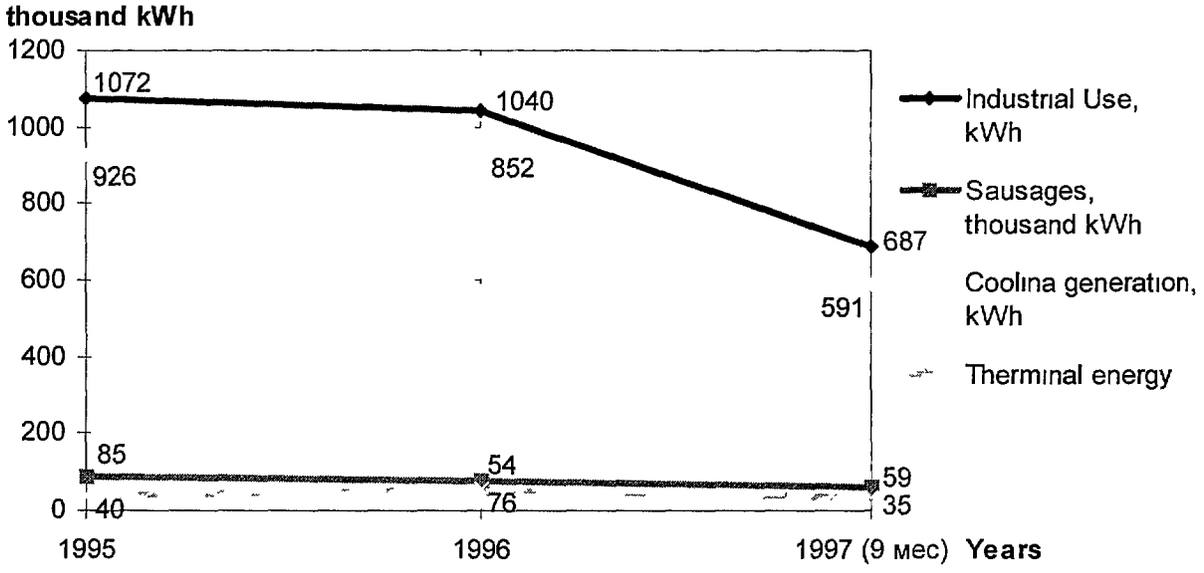

Fig 5 7 Dynamics of electricity use by types of production

5 2. Current tariffs for fuel and energy

The plant pays approximately US$110 thousand annually for its energy consumption Energy costs run approximately 5 percent of the total production cost Therefore, energy efficiency measures can make a significant impact on the plant's bottom line

The electric rate structure is what is known in Ukraine as the one-part tariff Once a year the plant negotiates a contract with the utility company on the rate for electric power In accordance with this contract the advance payment should be made for the negotiated amount of electric power consumption The monitoring over the consumption of contracted amount of power is carried out monthly by active power meters installed at the input feeders The sum of the advance payment is determined as of the time of previous payment in compliance with the attached methodology (Appendix No 1 "Annex No 1 to the Contract No 1 of November 28, 1996") The electricity consumption limits per each month are negotiated and approved one year in advance If the plant exceeds the maximum consumption limit, then the excess amount is billed at ten times the fixed rate of the contracted amount

The contracted electrical rate is Hr 0 083 per kWh (US$0 044 per kWh)

The natural gas comes to the plant from the city pipeline and is used mainly for generation of steam and hot water at the boiler room and for singeing of carcasses There are two gas meters at the gas distribution unit installed at two sections The monthly rate for natural gas is US$83 per 1000 cubic meters

Cold water is supplied to the meat plant via flow meter from the city pipeline The cost of water is US$0 5 per cubic meter

5.3. Energy use profile

The production units of the plant use the following energy sources

- electric power - ~380/220 V for electric drives and lighting,
- thermal energy as follows, saturated steam at 4 kg/cm pressure for sausage boiling, animal fat extraction etc , 70 ^{0}C hot water for hot water supply and space heating,
- natural gas for carcass singeing

The total production output in 1995 through 1997 year is shown in Table 3 1, energy consumption indicators by the types of products and work are shown in Fig 5 5, 5 6, 5 7 (according to Appendix D, form No 11 mtp)

The plant does not submeter natural gas, thermal energy or electric consumption at production units, plants or by types of products so it is difficult to account accurately for the changes in the plants overall specific energy use Currently this accounting is carried out by the economic office of the enterprise by calculation on the basis of the design specific use per unit and production output The results if the energy and fuel use are reflected in the state statistical reporting form No 11 mtp "Report on the use orf fuel, thermal energy and electric power" (Appendix D)

Due to the same reason it is difficult to develop an objective schematic of energy use by production lines and units

Summarized analysis of the data from the Table 3 1 and Fig 5 5, 5 6, 5 7 shows that calculated norms of energy consumption in 1995 through 1997 are constant for the standardized types of products and work (thermal energy generation, production of sausages, meat and by-products, refrigeration) irrespective of the range of output, volumes of production etc This seems to determine the amount of energy resource consumption in the item "Other industrial consumption" which is calculated as the difference between "Industrial consumption" and calculated energy use by standardized types of products and work and where expenses for energy exceeding the standards

are reflected The same item shows the non-standardized use by the types of products and work As the result "Other industrial use" was in 1995 34 2% of industrial use of natural gas, 33 3% of thermal energy, and 17 9% and 48 5% in 1996 respectively, 17 3% and 26 4% - in 1997 that seem to be one of the fuel and energy savings opportunities

As mentioned above out of the standardized electric power consumers the largest is the refrigeration system (82% of the industrial use) Specific use of electric power for generation of 1 Gcal of cooling is 892 5 kWh that is much higher than the optimum The refrigeration system is another large energy savings source

6. PREVIOUS ENERGY IMPROVEMENTS

According the plant staff some energy conservation improvements have been made at the plant over the last few years

- In 1991-1992 in the thermal treatment unit of the sausage workshop twelve thermal treatment chambers were renovated Internal lining was modified and air heaters for vortex air flow were installed In 1996 in one of the thermal treatment chambers new doors were installed which reduced significantly steam and hot air waste during operation However, current state of thermal treatment chambers is unsatisfactory
- In cold rooms the roofs are equipped with the Renor-type thermal insulation that substantially reduces the waste of cooling
- The ammonia compressor motor capacities are excessive, so two electric motors on two compressors have been replaced, and more appropriate start-up schedule have been worked out depending on the cold storage room load
- In order to save electricity used for refrigeration the plant management in 1996 carried out an experiment using outside air to cool the products to appropriate temperatures that yielded positive results
- In order to speed up salting and maturing processes a new technology of meat processing using brine injection and vacuum hammering devices Electricity consumption in the refrigeration system fell from two to three times

Other energy saving improvements that the plant is aware of but has not implemented yet include

- Renovation of the heated air supply system to the steam boiler using the heat of the boiler blowdown
- The plant management is working out plans for replacement of the thermal treatment chambers with new ones (e g Czekish) and purchase of Hungarian climatic treatment units where drying-up and smoking processes are combined
- Presently renovations of the culinary and sausage workshops are underway, ventilation systems are being modified

One problem has been the lack of extensive as well as sustained efforts in energy conservation Most of the past energy saving efforts have been conducted on a case-by-case basis without any energy saving management plan in place to systematically look for energy saving opportunities in all energy using areas of the plant Hence, a lot of energy saving opportunities in the general operation and maintenance have been overlooked There is also no in-house energy-efficiency engineer which makes it difficult to carry on the energy conservation efforts

7. ENERGY AUDIT

The analysis of the energy use at the enterprise given in Section 5 of this report and study of actual consumption of energy resulted in working-out of energy conservation opportunuties (ECO) described below They will reduce electricity consumption by 147 5 thousand kWh (16% of 1996 consumption), 3,000 m^3 of water (10%) and natural gas by 283 8 thousand cubic meters (40%)

These ECOs can be replicated at other industrial enetrprises and used as standard solutions to common problems

ECO#1 INSTITUTION OF AN ENERGY MANAGEMENT PLAN

There exists a great opportunity in the plant to improve its energy-efficiency through simple energy management measures which are low-cost in nature and will have immediate payback to the plant However, no formal energy management plan currently exists that will reduce losses related to operation and maintenance

A key to the successful implementation of an energy management plan is the appointment of an energy-efficiency manager or committee whose primary role is to focus on improving energy-efficiency Appointing an individual who is both knowledgeable and motivated by energy-efficiency issues will be a major step in saving energy at the plant This individual should

- have a technical background with a firm understanding of steam and electrical energy systems
- be able to work well with both plant workers in identifying operation and maintenance type energy-efficiency opportunities and also be able to communicate these energy savings opportunities to the management
- be able to provide training to the plant workers on more energy-efficient practices and also to help motivate them to implement such measures throughout the plant
- be able to develop an energy management plan for making energy-efficiency improvements over a 5 to 10 year period

It is therefore recommended that the plant appoint an energy manager who can steer the plant toward a more energy-efficient use of energy

The following energy management type of improvements were found during the energy audit and could be used as a starting point for implementing a more comprehensive plan

Energy submetering at the main workshops

There are four main production units or workshops sausage, culunary, fat extraction and specialised Each of these workshops produces various products with different energy content But due to the lack of submetering it is extremely difficult to to determine how the energy is used over the entire plant Furthermore, without this information it is impossible to determine which of the production units is the most energy efficient and which requires improvements by implementation of energy conservation measures In order to make the benefits of submetering materialize we recommend to equip the main production units with electricity and heat meters

Weatherstripping of doors of the thermal treatment unit

We recommend to repair and weatherstrip thermal treatment chamber doors in order to eliminate gaps while doors are closed The weatherstripping material should withstand temperatures up to 150^0C (300^0F)

Improvement of energy-efficiency of cold storage rooms

Implementation of the last ECO is possible in case of introduction of three energy saving measures to reduce energy waste in the cold rooms The first measure focuses on optimization of the use of the cold room space in the winter and summer seasons to minimize refrigeration requirements, the next two focus on minimizing infiltration of warmer and more humid outside air into the cold rooms, especially during the summer months by weatherstripping of the doors and installation plastic curtains

There are losses of natural gas at the plant caused by the general economic status of the plant First of all these are losses due to low load on the plant capacity and, therefore, operation of the boiler every other day that leads to additional use of natural gas to warm up the boiler at the start which consumes up to 30,000 cubic meters of gas Besides, the boiler operates in inefficient mode at the reduced steam pressure of 6 kg/cm^2 which causes the waste of 27,600 cubic meters per year Hence, "forced" losses amount to 57,600 cubic meters (11 3%) or US$4780

Since the plant pays approximately US$110,000 annually in energy bills and given the rise of electric power use in 1997 over 1996 potential savings more than likely that savings in the range of 10 percent will be possible , i e US$11,000 and 72,000 cubic meters of natural gas, 3,000 cubic meters of water and 104,000 kWh of electric power

The simple payback for instituting an energy management plan is

$$SP = \$14,200 / (\$11,000-\$3,000) = 1\ 8 \text{ years}$$

See details of this ECO in Appendix A1, ECO #1

ECO#2 REPLACEMENT OF STEAM TRAPS

The existing steam traps are the original ones that were installed when the plant was built 25 years ago These traps are no longer functioning properly allowing live steam to leak through to the atmosphere

It is recommended that the existing steam traps be replaced with new inverted bucket type steam traps There are two key advantages with this type of trap the trap has a simple design with only one moving mechanism and is therefore simple to diagnose and maintain, and this type of trap is more resistant to water hammer damage which is often present in batch operations

Therefore, Annual Cost Savings from steam trap replacement is $3,200/year or 38,900 cubic meters of natural gas

Simple Payback is 0 8 years (10 months)

See details of this ECO in Appendix A2, ECO #2

ECO#3 RECOVERY OF CONDENSATE FROM THE THERMAL TREATMENT UNITS

Approximately 50 percent of the condensate generated from the steam supplied to the thermal treatment unit is presently drained to the sewer system This loss occurs because the condensate return system relies on the steam pressure to push the condensate back to the boiler room

It is recommended that a new steam powered pump be installed near the thermal treatment unit to pump condensate generated in the thermal treatment unit back to the boiler as it is generated This will ensure more complete recovery of the condensate and will reduce the need for boiler feed water which requires energy to heat up to the boiler temperature Additional benefits include some savings from the reduced costs in city water consumption, feedwater chemical treatment, and boiler blowdown

Annual Cost Savings are $1,410/year or 26,600 cubic meters of natural gas

The simple payback is 4 0 years

See details of this ECO in Appendix A3, ECO#3

ECO#4 THERMAL INSULATION OF STEAM AND CONDENSATE PIPING

As the result of the study of the steam distribution system it was established that several main steam pipelines, branch pipes and condensate piping do not have such insulation

The efficiency of the boiler is 85% and steam distribution system efficiency is 75% Steam consumption at the 5 kg/cm^2 pressure is 1500 kg/hour provided the boiler is fired 43 hours a week, 50 weeks a year

Currently it is realistic to reduce energy waste in the thermal supply networks by utilization of modern efficient thermal insulation materials such as cellular plastics, Styrofoam and others with thermal conductivity factor of 0 03 - 0 05 Ccal/(meters x hours x ^{0}C) We assume the use of the above materials

As the result of implementation of this ECO there is a possibility to decrease the steam use by 682 4 Gcal per year Annual savings will amount to US$6414 6 per year

Simple payback is 1 5 years

See details of this ECO in Appendix A4, ECO #4

ECO#5 IMPROVEMENT OF COMBUSTION EFFICIENCY OF DKVR-2 5-13 BY EXCESSIVE AIR CONTROL

For thermal power supply 2 DKVR-2 5-13 boilers are used (one is a standby) For running these boilers the operation charts have been worked out but automatic control of fuel-to-air ratio in conformity with the load is nonexistent

Control of optimal combustion is carried out by subjective perception of the flame color by the boiler operator

We suggest to equip the operation personnel of the boiler unit with the ENERAC-2000 combustion analyzer and to include in the operational responsibilities of the operator the periodical check of combustion processes that would ensure the increase of boiler combustion efficiency and savings in natural gas

Implementation of this ECO will cut down the specific rate of fuel expenditure by 5% and will lower it to 161 kg of coal equivalent fuel per 1 Gcal The annual savings will come to US$2110/year or 25,430 cubic meters of natural gas

Simple payback is 1 2 years

See details in Appendix A5, ECO #5

ECO#6 ENERGY EFFICIENT LIGHTING OF THE PLANT

It is recommended to review the proposal to replace the 16 DRL-400 outside lighting lamps with DNaT-250-3 high pressure sodium lamps using the existing fixtures and changing the switching appliances for the ones of appropriate capacity

Introduction of the ECO should permit to lower the O & M costs for the replacement of the DRL - 400 lamps since their service life is 2 times shorter than that of DNaT -250-3 and reduce the outside lighting costs 1 7 times

It is also recommended to review the proposal to replace in the production buildings the 100-watt incandescent lamps with the ***GE Electronic Biax^{TM} T*** energy-efficient fluorescent lamps of 5 times lower capacity with the same lighting flow

Implementation of the ECO will reduce electric power consumption for the inside lighting and cut down the O&M costs for the lamp replacement as the service life of the GE lamps is more than twice longer

Total electricity savings will be 43,500 kWh Energy savings in money terms will be $1,913 4 Payback period will be 1 2 years

See details in Appendix A6, ECO #6

8. ENVIRONMENTAL IMPACTS OF RECOMMENDATIONS

The most efficient way of reduction of hazardous emission in the atmosphere is the decrease of fuel and electric power use, thus the introduction of the above mentioned recommendations is vital also from the environmental standpoint In Section 7 calculations have been made supporting opportunities of natural gas and electric power savings

Given that the plant is supplied with thermal energy by its own boiler room the savings are

Natural gas savings from implementation of the proposed measures for the entire plant will amount to

ECO #1 - S_1 = *72,000* cubic meters per year

ECO #2 - S_2 = *38,900* cubic meters per year

ECO #3 - S_3 = *26,600* cubic meters per year

ECO #8 - S_5 = *120,900* cubic meters per year

ECO #10 - S_6 = *25,400* cubic meters per year

Total natural gas savings will be $S_{sum} = S_1 + S_2 + S_3 + S_4 + S_5$ = 72 + 38 9 + 26 6 + 120 9 + 25 4 = *283 8* thousand cubic meters per year

Thermal energy savings calculated in the terms of natural gas we determine by the following equation (for example, for ECO#3)

$$S_{gas} = S_3 \, x \, b \, x \, 10^{-3} = 150 \, x \, 177\ 13 \, x \, 10^{-3} = 26{,}600 \text{ thousand cubic meters}$$

where b - specific use of natural gas, cubic meters per Gcal (determined by the gas and thermal energy use in 19s96),

S_3 - is equal to the energy savings according to the ECO #3, Gcal

Natural gas combustion leads to emission into the atmosphere of carbon oxide CO and nitrogen oxides NO_X

The amount of prevented emission that we determine in compliance by the No2 boiler operation chart constitute

- carbon oxide emission - $M_{CO} = h_{CO} \, x \, S_{sum} = 0\ 518 \, x \, 283\ 8 = 43$ kg,

- nitrogen oxide emission - $M_{NOx} = h_{NOx} \, x \, S_{sum} = 0\ 4725 \, m^3 \, x \, 283\ 8 = 134$ kg

where h_{CO}, h_{NOx} specific emission of carbon oxide and nitrogen oxides respectively, kg/cubic meter,

The results of calculations are shown in Table 8 1

Electric power savings from implementation of the proposed measures for the entire plant will amount to

ECO#1 - W_1 = *104* thousand kWh,

ECO#6 - W_6 = *43 5* thousand kWh,

Total electric power savings will be

$$W_{sum} = W_1 + W_6 = 104 + 43\ 5 = 147\ 5 \text{ thousand kWh per year}$$

According to the data of the Ministry of energy of Ukraine average emissions from generation of 1 thousand kWh were as follows

emissions of solid particles - 4 4 kg,

carbon oxide CO - 0 5 kg,

nitrogen oxides NO_X - 2 2 kg,

sulphur oxides SO_2 - 9 9 kg

Table 8 1 Summarized indicators of prevented pollutant emission into the atmosphere as the result of proposed ECO implementation

Type of emission	Reduction through thermal energy savings	Reduction through electric power savings	Total reduction per year
Solid particles, tonnes		0 65	0 65
Carbon monoxide, tonnes	0 043	0 07	0 11
Nitrogen oxides, tonnes	0 134	0 33	0 46
Sulphur oxides, tonnes		1 46	1 46

Thus implementation of proposed measures will cut down pollutant emission into the atmosphere by 2 68 tonnes that will certainly improve ecological situation in the city of Yalta

APPENDIX A. ENERGY CONSERVATION OPPORTUNITIES (ECO)

A 1 ECO#1 INSTITUTION OF AN ENERGY MANAGEMENT PLAN

Description of ECO

No formal energy management plan currently exists that will reduce losses related to operation and maintenance Hence, there exists a great opportunity in the plant to improve its energy-efficiency through simple energy management measures which are low-cost in nature and will have immediate payback to the plant

A key to the successful implementation of an energy management plan is the appointment of an energy-efficiency manager or committee whose primary role is to focus on improving energy-efficiency Appointing an individual who is both knowledgeable and motivated by energy-efficiency issues will be a major step in saving energy at the plant This individual should

- have a technical background with a firm understanding of steam and electrical energy systems
- be able to work well with both plant workers in identifying operation and maintenance type energy-efficiency opportunities and also be able to communicate these energy savings opportunities to the management
- be able to provide training to the plant workers on more energy-efficient practices and also to help motivate them to implement such measures throughout the plant
- be able to develop an energy management plan for making energy-efficiency improvements over a 5 to 10 year period

Such a position currently does not exist It is therefore recommended that the plant appoint an energy manager who can steer the plant toward a more energy-efficient use of energy

It should be noted that there is energy waste at the plant caused by the general situation with the plant economy

First of all this is the waste of natural gas due to cyclic operation of the plant and boiler which work every other day with more than 24-hour interruptions This leads to the waste of natural gas for the warming-up of the boiler at the firing start of up to 0 2 thousand cubic meters or per annum

$$G_{year} = 3 \text{ starts/week } x\ 50 \text{ weeks } x\ 0{,}2 \text{ thousand meters} = 30{,}000 \text{ cubic meters}$$

To another type of waste we can refer the fact that the boiler operates by the economically inefficient mode at the reduced pressure of 6 kg/cm^2 This the limit for safe operation by standards of reliable circulation

The waste of natural gas constitutes

$$L_G = (t_{SAT}^{N} - 40) - (t_{SAT}^{w} - 40)/6 = (190\ 7 - 40) - (158\ 1 - 40)/6 = 5\ 43\%,$$

where t_{SAT}^{N}, t_{SAT}^{W} = saturation temperatures respectively at the nominal(13 kg/cm^2) and operational pressure in the boiler, ^{0}C

Annually (considering the use in 1996 for the production of thermal energy of 509,000 cubic meters of natural gas) the waste was at 509,000 cubic meters x 0 0543 = 27,600 cubic meters

Hence, the waste above amounts to 57,600 cubic meters (11 3% of annual use) or US$4780

Provided the plant works to the full capacity the waste mentioned above can be eliminated

The following energy management type of improvements were found during the energy audit and could be used as a starting point for implementing a more comprehensive plan

1 Energy submetering in main workshops

Currently there is only total energy consumption metering Submetering is non-existent There are four main production units or workshops sausage, culunary, fat extraction and specialised Each of these workshops produces various products with different energy content But due to the lack of submetering it is extremely difficult to to determine how the energy is used over the entire plant Furthermore, without this information it is impossible to determine which of the production units is the most energy efficient and which requires improvements by implementation of energy conservation measures

In order to make the benefits of submetering materialize as the primary means of energy management we recommend to equip the main production units with electricity and heat meters Energy consumption data will enable the plant to match its energy efficiency with similar Western meat processing enterprises and, if necessary, to undertake improvements Additionally the heat meter will enable the plant to evaluate heat savings from recovery of condensate discussed in this report as an ECO The plant itself will make decision on installation of meters at other production units

2 Weather Stripping of Doors of the thermal treatment unit

The doors to the thermal treatment unit chambers have anywhere from ½ an inch to 2 inches of air gaps when they are closed, and steam and hot air leaks profusely through these gaps when the unit is working The plant staff has tried to retrofit one of the doors of the 11 chambers, however, the heavy duty doors are difficult to rebuild in-house The staff feels they don't have the expertise and tools to rebuild these doors Another problem is that the main body of the thermal treatment units itself is severely corroded and near the end of its life and so in order to make the doors more airtight modifications will also be needed to the door frame of the chamber

It is essential that complete overhaul be made to reduce the loss of steam and hot air from the units doors during operation A great deal of energy is being lost through these leaky doors and any other investments on the condensate handling system of this unit will be in vain if this loss is not reduced

It is recommended that the doors be repaired and fitted with weatherstrips to minimize the gaps when the doors are closed The weatherstrip should be able to withstand temperatures up to 150 degree C [300 degree F]

3 Improvement of energy-efficiency of cold storage rooms

There are nine cold storage rooms with the temperature requirements indicated in the table D1 in appendix D

Three energy saving measures can be implemented that will help to reduce energy waste in the cold rooms and are discussed below The first measure focuses on managing the cold rooms in the low load winter season to minimize refrigeration requirements, the next two focus on minimizing infiltration of warmer and more humid outside air into the cold rooms, especially during the summer months

(a) Cold Room Space Management The meat stored in the cold rooms drops in the winter months when the plant output is lower So some of the cold rooms are shut down However, it was observed that the meat supply could be consolidated further into a fewer cold rooms and thereby reducing the number of cold rooms needing refrigeration This space management practice could also be extended to summer months when the refrigeration load are highest for the cold rooms For example, there are three cold storage rooms, two with 200 tons of storage capacity and one with 100 tons of storage capacity, with a total capacity of 500 tons The meat peak load estimated by the plant production supervisor in the summer of 1997 was 220 tons and only 100 tons of meat in the winter However, all three cold rooms were operated in the summer and in the winter the two 200 ton rooms are kept running This represents a load to capacity ratio of approximately 50 percent in the summer and 25 percent in the winter, respectively Such low ratios represent a waste in cooling energy

Space management will require the installation of racks and shelves so that meat can be stacked better Currently, the meat is spread out on the floor of the cold room and virtually all the vertical space is unused Some stacking especially for longer term storage items will allow more meat to be stored in fewer cold rooms

The plant director has already implemented cold room space management in some of the cold rooms and so this is something that the plant has experience with The concept needs to be extend to the whole plant to capture significant energy savings

(b) Reduction of Infiltration Since the cooler air is denser it has a natural tendency to "spill out" when the doors are opened The lost cold air is made up by the warmer surrounding air infiltrating into the cold rooms This warmer air then has to be cooled by the refrigeration system Also, the

surrounding air usually has a higher moisture content This moisture condenses out when the air comes in contact with the refrigeration coil This condensed moisture eventually starts to freeze on the evaporator coil surface since the temperature of the refrigerant in the coil is below freezing temperature This ice build up on the coil reduces the cooling efficiency of the coil Resulting in higher energy use at the compressor

Cold air is lost continuously through the gaps in the cold doors and also when doors are opened to load/unload goods Although infiltration losses cannot be totally eliminated significant reductions can be made with the following two recommendations

(i) Weatherstripping of Cold Room Doors It was observed that the cold room doors do not shut tightly There were visible gaps when the doors are closed The cool air is constantly leaking out of the cold rooms as a result The doors should be weatherstripped to provide a tighter closure and minimize loss of cold air

(ii) Installation of Plastic Curtains in Cold Rooms above 0 Degree C At present there are no barriers to minimize the cold air lost during the loading and unloading operations when the doors are kept open

It is recommended that plastic curtains be installed at the doors to create a vestibule barrier against infiltration when the doors are opened during loading/unloading operations The barrier will significantly reduce the loss of cold air when the doors have to be kept open By minimizing loss of cold air from the rooms the cooling load and hence the compressor run-time will be reduced

Energy Savings Estimate

It is difficult to estimate the energy savings from individual energy management measures, but its not unreasonable, based on experience in the US, to expect savings anywhere from 1 to 5 percent of the plants total energy use Since the plant pays approximately US$110,000 annually in energy bills the savings potential ranges from US$1,100 to US$5,500 annually Given the increase in the intensity of the electrical energy use in 1997 over 1996, it is more than likely that savings in the range of 10 percent will be possible or 72,000 cubic meters of natural gas, 3,000 cubic meters of water and 104,000 kWh of electric power

Implementation Costs

The costs are of two types One is a recurring cost for the salary of the energy-efficiency manager and the other is the capital cost associated with implementing the recommendations above (Table A 1 1) The impact of the salary would be to lower the annual savings, however, this should not be seen as eating away the savings but as an investment because the benefits of an energy-efficiency manager more than outweigh the costs in the long run

Table A 1 1 Cost Estimates for ECO-1 Recommendations

Item	Cost, US$	Cost, Hr
1 Tools for energy management		
Energy metering equipment	$8,500	$16,000
Non-contact infrared thermometer Raytek PM3L3SZ	$1,600	2,960
Multimeter Fluke model 87	$500	925
Wattmeter TIF model 2000A	$600	1,110
2 Weatherstripping of Thermal Treatment Unit (500' length)	$1,000	1,850
3 Improvement of Energy Efficiency of Cold Rooms		
• Weatherstripping of Cold Room Doors	$500	925
• Installation of Plastic Curtains	$1,500	2775
Total	$14,200	Hr 26,545

Most of these measures can to be implemented in-house by the plant staff Therefore, the labor costs are not included here

Simple payback estimate

The typical salary for an energy-efficiency manager in Ukraine is US$3,000 per year [Hr 5,550 per year] The simple payback for instituting an energy management plan is

$$SP = \$14,200 / (\$11,000-\$3,000) = 1\ 8 \text{ years}$$

A 2 ECO#2 REPLACEMENT OF STEAM TRAPS

Description of ECO

The existing steam traps are the original ones that were installed when the plant was built 25 years ago These traps are no longer functioning properly allowing live steam to leak through to the atmosphere

It is recommended that the existing steam traps be replaced with new inverted bucket type steam traps There are two key advantages with this type of trap the trap has a simple design with only one moving mechanism and is therefore simple to diagnose and maintain, and this type of trap is more resistant to water hammer damage which is often present in batch operations

Energy Savings Estimate

The new traps will stop the leakage of live steam through the trap and into the atmosphere The estimated leakage rate for a 7 atmosphere (100 psig) steam system is given in the following Table A 2 1

Table A 2 1 Annual loss of steam([1])

Trap Orifice Size	High Loss Estimate, lbs (tons)	Low Loss Estimate, lbs (tons)
1/8" [3 175 mm]	635,000 [290 tonnes]	460,000 [209 tonnes]
1/4" [6 35 mm]	3,320,000 [1,510 tonnes]	1,850,000 [840 tonnes]
½" [12 7 mm]	10,200,000 [4,040 tonnes]	7,400,000 [3,360 tonnes]

([1]) Based on 100 psig steam with 8,760 hours/year operation

The energy loss estimates for the plant can be estimated from the losses in the above table The loss values are corrected to reflect the plant parameters 2 atmosphere (30 psig) pressure and 2,130 annual hours of operation It is assumed that the losses will be reduced in direct proportion to the pressure and hours of operation Further, the low loss estimates for the 1/8"orifice size is used for the plant to obtain a conservative estimate of the losses

Energy Loss per trap with *1/8"* orifice = ***460,000*** lb/year ***x 2130/8760 x 30/100 = 33,550*** lbs/year

There are a total twelve traps to be replaced eleven for the thermal treatment unit, and one for the fat extraction unit

Total Annual Energy Savings = ***33,550*** lbs/year/trap ***x 12*** traps = ***402,000 lbs/year [180 tonnes]***

The boiler operator informed the audit team that the boiler runs at 80 percent capacity in the summer and at 50 percent capacity during the winter Also, in the summer (May through Septmber) the boiler runs 56 hours a week or 1,120 hours total, and 36 hours a week the rest of the year or 1,008 hours total Therefore, using the total hours of operation we can estimate the annual steam production, and from the natural gas cost we can estimate the cost of producing a 1000 pounds of steam

Total annual steam production = summer production + winter production =

= 1,120 hours x 0 8 load x 5,500,000 lbs/hr boiler capacity +

+ 1,008 hours x 0 5 load x 5,500,000 lbs/hr boiler capacity =

= 7,700,000 lbs/year [3,500 tons/year]

Cost of producing 1000 lbs [0 45 tons] of steam = Total natural gas Cost / 7,700 =

= $62,320/7700

= ***$8/1000 lbs of steam [$17 6/ton]***

Therefore, Annual Cost Savings from steam trap replacement = 402 thousand lbs/year x $8

= ***$3,200/year [Hr 5,950/year]***

Natural gas savings will be ***38 9*** thousand cubic meters annually

Implementation Cost

The cost of an inverted bucket trap is based on Armstrong inverted bucket trap model 811 This trap is available in 2", 1 5" and 1" pipe connection sizes The unit cost of this trap is $200 It is recommended that a strainer be installed in the piping ahead of the inlet connection to this trap to prevent build up of unwanted foreign materials The unit cost of a 3/4" Y-strainer is $20 Therefore,

Total implementation cost = $***220 x 12*** = ***$2,640*** year [Hr 4,880]

Simple payback

Simple Payback = ***$2,640/$3,200 = 0 8*** years (10 months)

A 3 ECO#3 RECOVERY OF CONDENSATE FROM THE THERMAL TREATMENT UNIT

Description of ECO

Approximately 50 percent of the condensate generated from the steam supplied to the thermal treatment unit is presently drained to the sewer system This loss occurs because the condensate return system relies on the steam pressure to push the condensate back to the boiler room However, as the condensate accumulates it creates an excessive backpressure that stop the flow of condensate Therefore, to avoid excess condensate from accumulating some of the condensate is continuously drained The drained condensate represents an energy waste

It is recommended that a new steam powered pump be installed near the thermal treatment unit to pump condensate generated in the thermal treatment unit back to the boiler as it is generated This will ensure more complete recovery of the condensate and will reduce the need for boiler feed water which requires energy to heat up to the boiler temperature Additional benefits include some

savings from the reduced costs in (1) city water consumption, (2) feedwater chemical treatment, and (3) boiler blowdown

Energy Savings Estimate

The temperature of the condensate generated by the thermal treatment unit is 105 degrees C There are a total of eleven chamber in the thermal treatment unit each with a maximum steam capacity of 150 kg per hour (330 lbs per year) The unit runs for 56 hours a week in the summer months from May to September, or a total of 1,120 hours, and for 36 hours a week in the remaining months, or a total of 1,008 hours

Annual condensate generated = 330 lbs/hour-unit x 11 units x (1120 + 1008) hours/year
= 5,082,000 lbs/year [2,130 tons/year]

The flash loss for 105 degree C condensate in going from 2 atmospheres (30 psig) pressure to atmospheric pressure (0 psig) is 7 percent Therefore,

Annual condensate recovery potential = 5,082,000 lbs/year x 0 93 x 0 50
= 2,363,130 lbs/year [1 075 tons]

Returning this condensate back to the boiler results in a reduction in energy needed to heat the relatively cold feedwater from 15 degree C (60 degree F) to 100 degrees C (212 degree F)

$$Q = (m * (h_2 - h_1))/e$$

Q = annual savings in energy, Btu [GCAL]

m = annual condensate returned from the thermal treatment unit, 2,363,130 lbs/year

h_1 = enthalpy of city water at 60 degree F = 28 Btu/lb (from steam tables)

h_2 = enthalpy of condensate at 212 degree F = 180 Btu/lb (from steam tables)

e = boiler efficiency, assumed to be 0 60

Therefore,

Q = *(2,363,130* lb/year * *(180-28)* Btu/lb)*/0 6 = 600* million Btu/year [*150* GCal/year]

Annual Cost Savings = *150* GCal/year * *$9 4*/GCal = *$1,410/*year [Hr 2,610]

Implementation Costs

The cost of the equipment is given in the table A 3 1 below The exact model and sizes will need to be established more closely during the engineering design phase with the help of the equipment supplier The labor for installation is to be provided by the plant The estimated time from ordering the condensate handling equipment to clearing customs is 60 to 65 days or approximately 2 months

Table A 3 1 Cost Estimate for Implementation of ECO-3

Item	Cost, US$	Cost, Hr
1 Steam Pressure Pump Armstrong Model PT-206	$3,000	5,550
2 Shipping and customs duty on equipment Add 60%	$1,800	3,330
3 Piping Sch 40 Steel including supports and fittings		
• 200 feet of 3/4"	$600	1,110
4 Insulation Fiberglass with all service jacket		
• One inch for 200 feet of 3/4" pipe	$300	555
Total	$5,700	Hr 10,545

Note Quantities for fittings valves etc and piping lengths will depend on the routing and final installation design Exact requirements will be determined during the implementation phase by the condensate system vendor and plant staff

Simple payback

The simple payback is = $5,700/$1,410 = *4 0* years

A 4 ECO#4 INSULATION OF STEAM AND CONDENSATE PIPING

ECO description

As the result of the study of the steam distribution system it was established that despite thermal insulation of main steam pipelines several branch pipes and condensate pipelines do not have proper insulation Particulars of non-insulated piping are given in Table A 4 1

Table A 4 1

Purpose of piping	Length, L m	Diameter, D mm	Number of valves	t, °C
1 Steam	30	81	1	150
2 Steam	105	55	2	150
3 Steam	81	41	2	150
4 Steam	105	34	2	150
5 Steam	30	27	1	150
6 Condensate	190	55	2	75
7 Condensate	14	41	1	75
8 Condensate	70	27	1	75

The condensate is returned to the boiler feed tank where it is mixed with cold water of 15 °C The feed water tank is heated with steam in order to supply feed water to the boilers at 80 °C

The efficiency of the steam boiler is 85% and efficiency of the steam distribution system is 75% according to the operation chart Consumption of steam at the pressure of 5 kg/cm^2 is 1500 kg/hour considering that the boiler operates 56 hours a week in wintertime and 36 hours a week in summertime, i e 43 hours a week on average, 50 weeks a year

It is recommended that the steam and condensate piping should be fully insulated

The thickness of insulation should be selected depending on the piping diameter and its purpose The data are furnished in Table A 4 2

Table A 4 2

Purpose	Diameter, mm	Insulation thickness, mm
1 Steam	55 - 81	80
2 Steam	27 - 41	60
3 Condensate	27 - 55	40

Annual energy savings estimate

The temperature of the pipe surface is taken at 150 ^{0}C for steam and 75 ^{0}C for condensate piping

We define the thermal energy waste for insulated and non-insulated pipes in accordance with the methodology [Methodological instructions for determination of losses of fuel and energy resources RD5 EDIV 015-008094 Minmashprom, Kiev, 1994]

Thermal energy waste in non-insulated pipes (Ccal/hour) is determined by the following formula

$$Q_{nin} = g_{nin} \, x \, L_o \, x \, k,$$

where g_{nin} - specific losses of non-insulated piping (CCal /meter x hour),

k - correction factor which depends on the air temperature and the difference between pipe wall temperature and air temperature,

L_o - given length of piping, m

$$L_o = L + (1m \times n),$$

n - number of valves within the section

For the pipeline #1 from Table 1 we have

$$Q_{nin1} = 510 \times (30+1) \times 0\ 95 = 15{,}020 \text{ CCal /hour}$$

Further calculations were carried out similarly and are summarized in Table 3

Thermal energy waste of insulated (CCal /hour) pipelines are calculated by the formula

$$Q_{in} = g_{in} \times (t_1 - t_2) \times a \times b \times L_0$$

where g_{in} - is specific loss over 1 meter of piping with difference $(t_1 - t_2) = 1\ ^0$C depending on the thickness of insulation [1, Table 10],

t_1 - temperature of pipe walls assumed as equal to temperature of heat carrier, °C,

t_2 - temperature of the air, °C,

a - correction factor depending on the thickness of insulation, thermal conductivity if insulation material and temperature difference between heat carrier and air With insulation thickness up to 100 mm and temperature difference up to 300 °C $a = 1$,

b - wind correction factor (with wind velocity of 5 m/sec)

Presently it is realistic to cut down waste in the thermal networks by using modern efficient types of thermal insulation materials such as cellular plastics, Styrofoam and other with thermal conductivity of 0 03 - 0 05 Ccal/ (m x hr x °C) We assume the use of the materials above

For pipeline #1 from Table A 4 1

$$Q_{in1} = 0\ 146 \times (150 - 15) \times 1 \times 1\ 03 \times 31 = 629 \text{ Ccal/hr}$$

Similar calculations were carried out for all pipelines and are shown in Table A 4 3

Net savings are received taking into account the length of a pipeline and full savings - considering the steam distribution system and boiler efficiency

Table A 4 3

Pipeline No	Given length	Thermal waste without insulation	Thermal waste with insulation	Net savings	Full savings
	L_o, m	Q_{nin}, ccal/hr	Q_{in}, ccal/hr	S_N, ccal/hr	S_F, ccal/hr
1	31	15,020	629	14,391	22,574
2	107	42,802	2,663	40,139	62,960
3	83	27,797	2,188	25,609	40,171
4	107	30,573	2,580	27,993	43,911
5	31	7,068	725	6,343	9,950
6	192	76,608	7,289	69,319	108,736
7	15	4,988	509	4,479	7,026
8	71	16,188	2,121	14,067	22,066
			Total	**202,340**	**317,394**

Thus annual savings should amount to

$$S_a = 317{,}394 \text{ Ccal/hr} \times 43 \text{ hrs} \times 50 \text{ weeks} = 682\ 4 \text{ Gcal/year}$$

Annual cost savings estimate

Cost of 1 Gcal - C_{GC} = *US$9 4*
Annual savings

$$S_M = S_a x\ C_{GC} = 682\ 4 x\ 9\ 4 = US\$6,414\ 6$$

Implementation cost

Total cost of insulation to be installed - $C_1 = L_{CON} x\ C_{INSC} + L_{ST} x\ C_{INSS}$ =*US$6,000*
where L_{CON} = total given length of condensate pipelines 6,7,8 from Table A 4 1, in meters,
L_{ST} = total given length of steam pipelines 1 throgh 5 from Table A 4 1, in meters,
C_{INSC}, C_{INSS} = cost of 1 meter of insulation of condensate and steam pipelines respectively, US$ per meter
Cost of installation - C_2=*US$3,500*

Total estmated cost $C_{COM} = C_1 + C_2$ = *6,000+3,500 = US$9,500*

Simple payback estimate

Annual savings in costs - S_M = *US$6,414 6*
Implementation cost - C_{COM} = *US$9,500*

Simple payback = S_M / C_{COM} = 9,500/6,414 =*1 5* years

A 5 ECO #5 IMPROVEMENT OF COMBUSTION EFFICIENCY IN DKVR-2 5-13 BOILER BY EXCESSIVE AIR CONTROL

For thermal power supply 2 DKVR-2 5-13 boilers are used (one is a standby) To run these boilers the operation charts have been worked out but automatic control of fuel-to-air ratio in conformity with the load is nonexistent The air consumption value is controlled periodically by the supply air pressure and gas consumption by the pressure before the burners which under the conditions of absence of steam or thermal energy generation metering and uncontrolled air infiltration or its loss via the in-built coal flues does not allow one to substantiate the idea of optimal combustion processes Control of optimal combustion is carried out by subjective perception of the flame color by the boiler operator

We suggest to equip the operation personnel of the boiler unit with the ENERAC-2000 combustion analyzer and to include in the operational responsibilities of the operator the periodical check of combustion processes which would ensure the increase of boiler combustion efficiency and savings in natural gas

Energy savings estimate

According to the plant data given in the form No 11 MTP "Report on the results of the use of fuel, thermal and electric energy" in 1996 the plant generated 3480 Gcal of energy while actual specific use was 169 5 kg of coal equivalent fuel per 1 Gcal Total fuel use was G=590 tce or 508,600 cubic meters of natural gas According to the manufacturers certificate the DKVR-2 5-13 boiler equipped

with economizer should have efficiency of μ =*0,9* and coal eqivalent fuel use of 158 73 kg per 1 Gcal

Introduction of this measure will reduce the specific use by *b~5%* and it will reach 161 kg per 1 GCal

Savings of gas in the physical terms will be

$$S_G = G \times b = 508\ 6 \times 0\ 05 = 25\ 43 \text{ thousand cubic meters}$$

Annual cost savings estimate

Money savings at the price of US$ 83 per 1000 cubic meters will be

$$S_M = S_G \times 83 = 25\ 43 \times 83 = US\$2{,}110\ 7$$

Implementation cost

Cost of *ENERAC - 2000* combustion analyzer - C_1=*US$5,000*

Cost of transportation - C_2=*US$1,500*

Total $C_{COM} = C_1 + C_2 = 5{,}000 + 1{,}500 = US\$6{,}500$

Simple payback estimate

Annual savings in costs - S_M = *US$2,110*

Commissioning costs - C_{COM} = *US$6,500*

Simple payback

$$SP = C_{COM}/S_M = 6{,}500/2{,}100 = 3 \text{ years}$$

Under the conditions of implementation of the projected expansion of production output the simple payback period will be reduced to *1* year

A 6 ECO#6 ENERGY EFFICIENT PLANT LIGHTING

ECO description

The external lighting system of the plant area consists of 16 SZPR-400 lighting fixtures with DRL - 400 high pressure mercury lamps installed at 10-meter high ferroconcrete lampposts Part of the area adjacent to the production buildings is lighted by conventional 100-watt and 150-watt incandescent lamps The light flow of the DRL - 400 lamp is equal to 23000 lumen and the nominal service life is 6000 hours

It is suggested to review the proposal of replacement of DRL - 400 high pressure mercury lamps for external lighting of the plant area with the DNaT-250-3 high pressure sodium lamps using existing fixtures and replacing switching appliances with appropriate capacity The sodium lamps of the DNaT -250-3 type manufactured nationally in the city of Poltava which have a longer operation life - 12000 hours with the light flow of 25000 lumen

The system of internal lighting of the administrative and production zones of the plant consists of the following

- 350 fixtures with *P=100*-watt incandescent lamps and total capacity of *35* KW,
- 160 fixtures with fluorescent lamps of *P=2 x 40* W and total capacity of *12 8* KW,

- 40 fixtures with fluorescent lamps of $P=2 \times 60$ W and total capacity of $4\ 8$ KW,
- 8 fixtures with fluorescent lamps of $P=2 \times 25$ W and total capacity of $0\ 4$ KW

From the given data it is seen that in the internal lighting system of the plant overuses low-efficiency short-life (from 700 to 3000 hours) incandescent lamps of 100 watts each

We suggest to replace the incandescent lamps with energy efficient compact ***GE Electronic Biax*** ^{TM}T fluorescent lamps in the production buildings where operation goes 200 days a year thermal treatment unit (60 x 100 W), boiler room (50 x 100 W), 3rd and 4th floors of the main production building with the staircase (90 x 100W)

The total capacity of the replaced lamps will be

$$100 \text{ W} \times 155 = 15{,}500 \text{ W} = 15\ 5 \text{ kW}$$

Relation of the capacities at the same light flow is as follows

Capacity, W

Incandescent lamps	*GE* lamps
75	15
100	20

Calculation of annual electric power savings

The electric power use of the SZPR - 400 lighting fixtures with DRL - 400 mercury lamps is

$$P_{F1} = (P_{L\,1} + P_{SW,\,1})\cos\phi$$

where $P_{L\,1}$ - is the capacity of DRL - 400 mercury lamp, W,

$P_{SW\,1} = 85$ W is capacity of switching appliances,

$\cos\phi = 0\ 98$

$P_{F1} = (400+85)0\ 98 = 475$ Wh $=0\ 475$ kW

Amount of the power used by 16 lighting fixtures over 1 year at average 12-hour use is

$$P_1 = P_{F1} \times n \times F$$

where $n\ -16$ is the number of lighting fixtures,

$F = 12 \times 365 = 4380$ hours - annual time of lighting operation

$P_1 = 0\ 475 \times 16 \times 4380 = 33288$ kWh

The electric power use of the SZPR - 400 lighting fixtures with DNaT - 250-3 lamp

$$P_{F2} = (P_{L\,2} + P_{SW\,2})\cos\phi$$

where $P_{L\,2} = 250$ W is the capacity of DNaT - 250-3 lamp,

$P_{SW\,2} = 34\ 7$ W is capacity of switching appliances,

$\cos\phi = 0\ 98$

$P_{F2} = (250+34\ 7)0\ 98 = 279$ W $=0\ 279$ kW

Power used by 16 lighting fixtures over 1 year at average 12-hour use is

$$P_2 = P_{F2} \times n \times F = 0\ 279 \times 16 \times 4{,}380 = 19{,}552\ 3 \text{ kWh}$$

Annual energy savings by using DNaT-250-3 lamps

$$S_{E\_E} = P_1 - P_2 = 33{,}288 - 19{,}552\ 3 = 13{,}735\ 7 \text{ kWh}$$

Annual power consumption of incandescent lamps

$$P_{IN} = p_{IN} \times t_{SUM} \times N,$$

where p_{IN} - is total capacity of incandescent lamps, kW,

t_{SUM} - is work shift duration per day, hours,

N - is number of working days per year

P_{IN} = 15/5 x 12 x 200 = 37,200 kWh

After replacement of incandescent lamps with *GE* lamps = 20 W the rated capacity will be

$$p_{GE} = 20 \times 155 = 3\ 1 \text{ kWh}$$

Then the annual electric power use for new GE lamps will be

$$P_{GE} = p_{GE} \times t_{SUM} \times N = 3\ 1 \times 12 \times 200 = 7{,}440\ kWh$$

Thus the replacement of lamps will allow annual savings in physical terms

$$S_{E\text{-}E1} = P_{IN} - P_{GE} = 37{,}200 - 7{,}440 = 29{,}760 \text{ kWh}$$

Total savings at the plant will be

$$13{,}735\ 7 + 29{,}760 = 43\ 5 \text{ thousand kWh}$$

Annual cost savings estimate

Cost savings at the price of electric power of US$0 044 per 1 kW

$$S_M = S_{E\ E} \times 0\ 044 = 13735 \times 0.044 = US\$604\ 4$$

$$S_{M1} = S_{E\text{-}E1} \times 0\ 044 = 29{,}760 \times 0\ 044 = US\$1{,}309$$

Implementation costs

Cost of one DRL - 400 with appliances - C_1 = US$10 5

Cost of one DNaT -250-13 lamp with appliances - C_2 = US$22 4

Including cost of one DNaT -250-13 lamp - US$17 4

Cost of one ***GE Electronic Biax*** ^{TM}***T*** lamp - US$20

Construction and installation costs not included since the work will be carried out by the plant personnel

Simple payback estimate

Annual savings in costs - S_M = US$604 4

Implementation costs = C_{IMP} =22 4 x 16 = US$358 4

Simple payback of DNAT- 250-13 lamps

$$SP = C_{COM}/S_M = 358\ 4/604\ 4 = 0\ 6 \text{ year}$$

Additional costs for ***GE Electronic Biax*** ^{TM}***T*** will be

$$C_{GE} = C_3 xN = 20 \times 155 = US\$3{,}100$$

Total costs are determined by the difference between *GE* lamp costs and electric power savings

$$C_{SUM} = C_{GE} - S_{M1} = 3{,}100 - 1{,}309 = US\$1{,}791$$

Simple payback of *GE* lamps

$$SP_{GE} = C_{SUM} - S_{M1} = 1{,}791/1{,}309 = 1\ 4 \text{ years}$$

Replacement of lamps in the buildings were lighting is on periodically for short time is not a priority measure and is not studied here

Total cost the ECO implementation at the plant

$$C = C_{IMP} + C_{SUM} = 358\ 4 + 1{,}791 = US\$2{,}149$$

Savings of energy resources in terms of money

$$S = S_M + S_{M1} = 604\ 4 + 1{,}309 = US\$1{,}913\ 4$$

Simple payback

$$SP = C/S = 2149/1913\ 4 = 1\ 2 \text{ years}$$

Since the service life of selected lamps is substantially longer than that of the existing ones the actual payback period can be less than 1 year

B.PRELIMINARY SPECIFICATIONS

Specifications of recommended equipment for Yalta meat processing plant

Table B 1

ECO # by Section 7	Name of equipment	Type, model	Manufacturer, country	Basic parameters	Requirement		Price		Total cost		Notes
					Measure unit	Qty	Hr	$ US	Hr	$ US	
1	2	3	4	5	6	7	8	9	10	11	12
ECO #1	Non-contact infrared thermometer	Model PM3L3SZ	"Raytek', USA	t = -20 +1000 °C $L_{measure}$=10m	units	1	-	1600	-	1600	
	Partial radiation thermometer	Smotrich-M6P	Research and industrial association Termopribor" 3 Naukova str Lviv 290053 UKRAINE	t = -35 +1000 °C $L_{measure}$=10m	units		2500	1350	2500	1350	
	Non-contact infrared thermometer	Model DHS-26XL	WAHL INSTRUMENTS, INC 5750 Hannum Avenue Culver City CA 90231 USA	t=-20 +1000 °C $L_{measure}$=10m			-	2640	-	3430	
ECO #1	Thermal insulation curtains/doors	Two-wing door	ALEKO 90-Day limited warranty	2 44 x 2 44 m	units	3		5100		3400	
ECO #1	Multimeter	Model 87	Fluke Mfg co, inc , USA		units	1		500		500	
		EK 4306	Zhitomir JSC 'Elektroizmeritel" 16, Pobedy pl Zhitomir 262014 UKRAINE				92 4	50	110	57	
ECO #1	Wattmeter	Model TIF2000A	TIF Instruments, Inc 9101 NW 7th Avenue, PO box 1338 Miami, Florida 33238-9990 USA		units	1		600		600	
	Voltamperephase meter	VAF85M	Zhitomir JSC "Elektroizmeritel" 16, Pobedy pl Zhitomir 262014 UKRAINE				205	110	236	127	
ECO #1	Power meter	Model 382060	Davis instruments 4701 Mount Hope Drive Baltimore, MD 21215 USA		units	1		599		690	

ECO #1	Energy metering system	ITEK (US-made components)	Research and production enterprise "Energiya+ 37, bldg 22 Pobedy pr Kiev UKRAINE	Technical metering	units	1		8500		8500	
ECO #2	Steam trap with strainer	Model 811	Armstrong USA	DN=20, orifice diameter=2 78 mm	units	12		220		3040	
	Steam trap	FT 43-10TV	Spirax Sarco, Inc P O Box 119 Allentown, PA USA	DN=20 P_s=16 kg/cm^2	units	12		455		6500	
	Float- and hydrodynamic-type steam trap	KPGD-1	Instite of technical thermal physics of NANU 29 Zhelyabova str Kyiv 252057 UKRAINE	P_{max}= 10 kg/cm^2, d_s=32 mm	units	12	1080	580	648	3480	
	Condensate strainer	FIG33	Spirax Sarco, Inc P O Box 119 Allentown, PA USA	DN=20 P_s=16 kg/cm^2	units	12		110		1320	
	Check valve	DCV2	Spirax Sarco, Inc P O Box 119 Allentown, PA USA	DN=20 P_s=16 kg/cm^2	units	12		110		1320	
ECO #3	Steam pump	Model 382060	Armstrong, USA		units	1	5500	3000	5500	3000	
ECO #4	Thermal insulation for steam piping	Fiberglass with aluminum jacket	USA	t = 150 °C d = 27 mm d = 34 mm d = 41 mm d = 55 mm d = 81 mm	m	 260 105 95 200 30	 19 5 19 5 19 5 19 5 19 5	 10 5 10 5 10 5 10 5 10 5	 5070 2050 1850 3900 585	 2730 1100 1000 2100 315	
	Thermal insulation for steam piping	Mats of mineral wool on fiberglass	JSC "Stroyindustriya' 7 Stroyindustriya str Kyiv 252010 UKRAINE		m^2	260	3 54	1 9	1290	690	

	Thermal insulation for steam piping	ROMB basalt material rolls	JSC"Biletsky zavod Teplozvukoizolyatsiya' 7 Stroiteley str Kotsubinske Kyiv oblast UKRAINE	70-100 mm thickness	m^2	260	22	11 9	7440	4020	
	Thermal insulation for condensate piping	Polyurethane foam	JSC "Vasilkov refrigerator plant' 72, Sobornaya str Vasilkov Kyiv region UKRAINE	t = 100°C d = 27 mm d = 41 mm d = 55 mm	m	71 15 192	15 9 15 9 15 9	8 8 8	1130 240 3050	568 120 1536	
	Thermal insulation for condensate piping	Mats of mineral wool on fiberglass	JSC "Stroyindustriya" 7 Stroyindustriya str Kyiv 252010 UKRAINE		m^2	90	3 54	1 9	414	222	
	Thermal insulation for condensate piping	ROMB-S -50 basalt material rolls	JSC"Biletsky zavod Teplozvukoizolyatsiya" 7 Stroiteley str Kotsubinske Kyiv oblast UKRAINE	50 mm thickness	m^2	90	13 8	7 5	1620	870	
ECO #5	Combustion analyzer	ENERAC-2000	Energy Efficiency Systems, Inc , 1300 Shames Drive, Westbury, NY 11590 USA	Analyzed gases O_2, CO, SO_2,NO_x	units	1		5000		6500	
	Combustion analyzer	BACHARACH	Bacharach, 625 Alpha Drive, Pittsburgh PA 15238 USA	Analyzed gases O_2, CO, SO_2,NO_x				5000		6500	
ECO #6	Fluorescent lamp	General electric Biax ™ T	General electric co , USA	U = 220V P = 20W	units	155		20		3100	
	Fluorescent lamp	Ralux "Radium"	Research and production enterprise ' Elotek" 56 Pobedy pr Kyiv UKRAINE	U = 220V P = 20W			24	13	3720	2015	
	High pressure sodium lamp with controls	DNaT-250-3	JSC 'Poltava gas discharge lamp works ' 3 Zavodskaya str Poltava UKRAINE	U = 220V P = 20W	units	16		22 4		360	

C.INFORMATION FROM EQUIPMENT MANUFACTURERS

WAHL INSTRUMENTS INC
5750 HANNUM AVENUE
CULVER CITY CALIFORNIA 90231
TOLL FREE (800) 421 2853
TELEPHONE (310) 641 6931
TELEX 66 4406 (WAHL CORP LSA)
FAX (310) 670 2810

Heat Spy Digital Infrared Thermometer

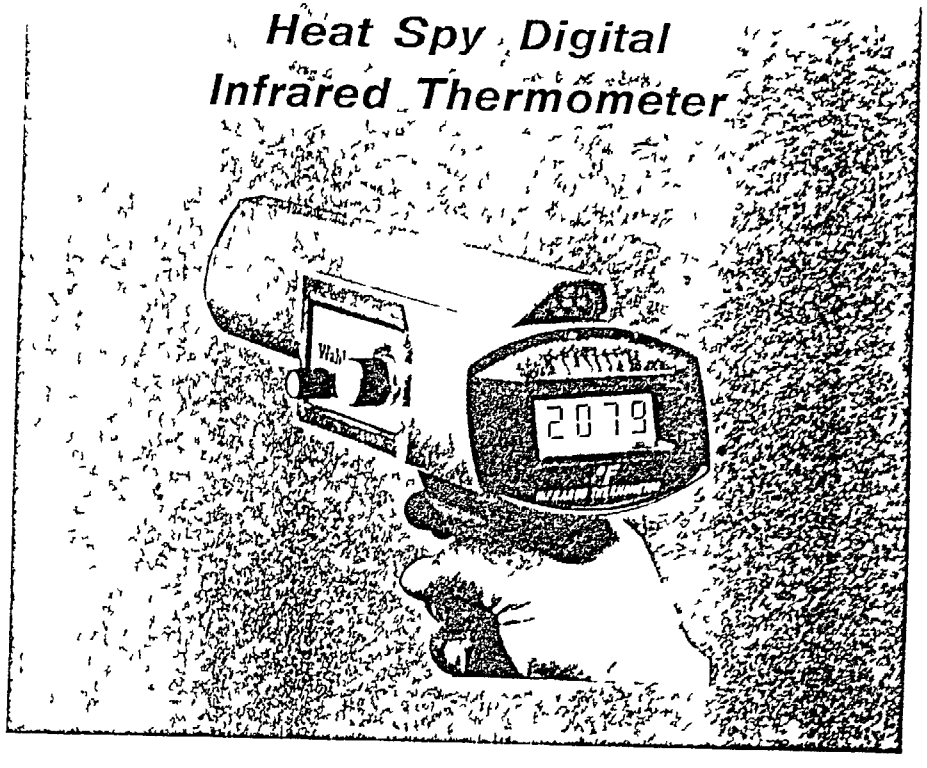

INSTRUCTION
MANUAL

MODELS DHS-8X DHS-24, DHS 24Y
DHS 26 DHS 26X DHS 28Y

Wahl

8 0 SPECIFICATIONS

Table 3

HEAT SPY SPECIFICATIONS

Model	DHS 24X (LCD) DHS 24 (LED)	DHS 26X (LCD) DHS 26 (LED)	DHS 28X (LCD)	DHS 8X (LCD) DHS 8 (LED)	DHS400X
Application	General Use including Glass Surfaces Best Accuracy	General Use including Glass Surfaces	High Temp including Glass Surfaces	Small Targets Electronic Components	0 1 Resolution Earth Science Laboratory Use
Temperature Range	0 to 1000 F −20 to +550 C	0 to 2000 F −20 to +1000 C	32 to 2500 F 0 to 1400 C	0 to 1000 F −20 to +550 C	−40 0 to +600 C −40 0 to +1400 F
Digital Readout LCD 0 5 in (12mm) LED 0 33 in (8 2mm)	LCD LED	LCD LED	LCD	LCD LED	LCD
Factory Mutual approved for hazardous environments	Yes	Yes	Yes	Yes	Yes
External F/ C Switch	Optional	Optional	Optional	Optional	N/A
Spectral Range (Microns) = Meters X10⁻⁶	8 14	8 14	8 14	8 14	8 11
Accuracy at 77 F ±5	±0 3 % Full Scale	±0 3 % Full Scale	0 3 Full Scale	0 3 Full Scale	0 5 C
Ambient Operation Temperature	25 to 125 F 4 to +52 C	25 to 125 F 4 to +52 F	5 to 1 5 F 1 to +52 C	25 to 125 F 1 to +52 C	10 to 101 F 5 to 10 C
Temp Coefficient	±0 1 deg/deg	±0 1 deg/deg	±0 1 deg/deg	±0 1 deg/deg	±0 1 deg/deg
Repeatability	±1 F	2 F	±3 F	2 F	0 2 C
Resolution	1° F/C	1 F/C	1 F/C	1 F/C	Switchable 0 1 or 1 F/C
Response Time to 95% of Reading	1 sec	1 sec	1 sec	1 sec	1 sec
Target Size at Focal Point	1 6 in dia @ 2 ft	1 6 in dia @ 2 ft	1 6 in dia @ 2 ft	0 15 in dia @ 1 in	2 in dia @ 2 ft
Distance to Target Size Beyond Focal Point	20 1	20 1	0 1	N/A	20 1
Practical Working Distance	0 to 40 ft	0 to 40 ft	0 to 40 ft	0 to 8 in	0 to 10 ft
Sighting System	Enclosed Optical Sight	Enclosed Optical Sight	Enclosed Optical Sight	Light Beam on Center Line	Enclosed Optical Sight
Adjustable Emissivity Range	0 2 1 0	0 2 1 0	0 2 1 0	0 2 1 0	0 2 1 0
Internal Calibration	Auto zero	Auto zero	Auto zero	Auto zero	Auto zero
Internal Self Test	Yes	Yes	Yes	Yes	Yes
Maxi Temp Peak Hold	Yes	Yes	Yes	Yes	Yes
Output to Recorder	Option J	Option J	Option J	Option J	No
Battery	One 9V (LCD) Two 5 4V (LED)	One 9V (LCD) Two 5 4V (LED)	One 9V (LCD)	One 9V Two 5 4V (LED)	One 9V
Continuous Operating Time	40 hrs (LCD) 15 hrs (LED)	40 hrs (LCD) 15 hrs (LED)	40 hrs	40 hrs 15 hrs LED	40 hrs
External Power See Options	With option EP P/N BP6 Rechargeable Battery Pack provides 200 hrs on LCD models or 40 hrs for LED models on one charge Continuous line operation through recharger				
Weight Lbs	2 2	2 2	2 2	2 5	2 5

Table 3 (Continued)

OPTIONS

Output Jack for 1 mv/deg linear output Includes connection for external battery pack BP12 below
Specify Option 'J

Modification to use External Battery BP12 below
Specify Option "EP'

External Battery Pack with recharger for 110V
Specify BP12 110

External Battery Pack with recharger for 220V
Specify BP 12 220

Optional F to C Computer Calculated switch selection on handle
Specify Option 'S

Wahl Heat Spy Thermometers are specified and tested in accordance with ASTM specifications

9 0 FACTORY REPAIR PROCEDURE

Pack the instrument in the original shipping container to prevent additional damage We specify this requirement because the package is designed to protect against damage

Ship Parcel Post/Prepaid to

Wahl Instruments Inc
5750 Hannum Avenue
Culver City CA 90231

Your instrument will receive immediate attention

12 1162 15 25 7363 025 88

ПІРОМЕТР ЧАСТКОВОГО ВИПРОМІНЮВАННЯ «СМОТРИЧ-МоП»

Призначений для безконтактного вимірювання температури об'єктів при відпрацьовуванні різноманітних технологічних процесів та експрес-контролю температури обладнання.
Застосовуються практично у всіх галузях промисловості, а також в сільському господарстві та наукових дослідженнях.
Показ температури на табло в цифровому вигляді.
Пірометр мікропроцесорний.

Діапазон вимірювальних температур, °С	від мінус 35 до 1100
Основна похибка, °С	=(0,01tвим +1)
Робочий спектральний діапазон, мкм	від 5 до 14
Показник візування	1 : 30
Час установлення показів, с	2,0
Номінальна робоча відстань, м	1,0
Живлення, В	вбудована батарея з напругою 6,25
Споживана потужність, Вт	1,0
Маса, кг	1,5
Габаритні розміри, мм	

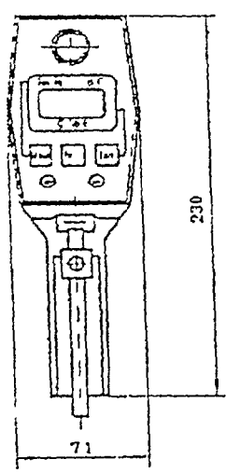

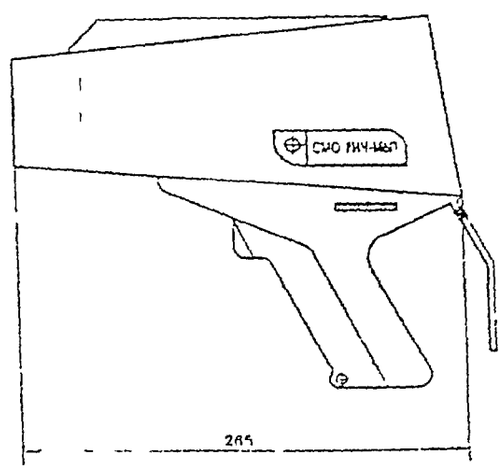

BEST AVAILABLE COPY

Технічні вимоги

1 Пірометр грунтується на конструктивній, схемотехнічній та метрологічній базі агрегатного комплекту стаціонарних пірометрів АПІР С (1 черга)

1 1 Комплектність (ПВ-6 + ПЧД-131 або ПЧД-121) уточнюється при замовленні

2 Спеціальні технічні вимоги на пірометр

2 1 Градуювальна характеристика спеціальна, індивідуальна або стандартна з шириною діапазону (250 - 1000) С	
2 2 Спектральні діапазони, мкм	0,8 - 1,2, 1,2 - 1,8
2 3 Загальні діапазони вимірюваних температур відповідно до спектральних діапазонів, С	800 - 2500, 250 1300
2 4 Показник візування, в залежності від типорозмірів ППП, нижньої границі вимірювання та спектрального діапазону	1/10 - 1/300
2 5 Робоча відстань фіксована, уточнюється при замовленні, м	0,2 - 20
2 6 Основна похибка комплекту ПВ-6 + ПЧД-131 або ПВ-6 + ПЧД-121, %	0,6 - 1,0

З питань придбання пірометрів звертатись.

290053 м Львів, вул Наукова, 3
НВО «Термоприлад», тел 39-07-54
63-02-77 п Вічинюк М Г

BEST AVAILABLE COPY

ВЭС - 01

Переносной анализатор дымовых газов

Назначение — анализ состава дымовых газов, определение эффективности сжигания топлива

Измеряемые величины	O_2, CO, NO_x, SO_2, температура (°C)
Вычисляемые величины	Эффективность горения, CO_2, избыток воздуха
Пробоотборный зонд	12" и 48"
Встроенное печатное устройство	
Источники питания	Аккумуляторная батарея со встроенным зарядным устройством Сеть переменного тока (220 В, 50 Гц)

Тип ENERAC 2000 фирмы Energy Efficiency Systems, Inc или эквивалентный

Ориентировочная стоимость — $ 6000

Energy Efficiency Systems, Inc
1200 Shames Drive, Westbury, NY 11590, USA
Fax (516) 997-2129

или

Bacharach
625 Alpha Drive
Pittsburgh, PA 15238, USA
Fax (412) 963-2640

или

Cosa Instrument Corporation
55 Oak Street
Norwood, NJ 07648, USA
Fax (201) 767-6804

BEST AVAILABLE COPY

ENERAC 2000

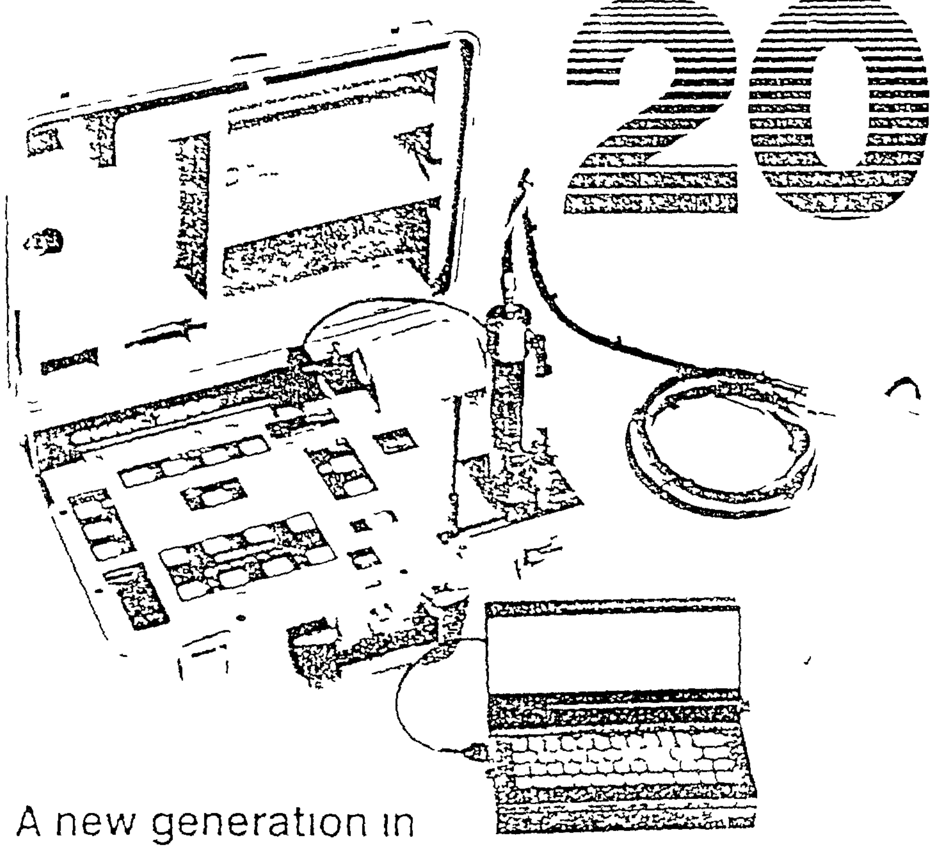

A new generation in combustion management

No matter what your position and area of responsibility in the combustion management process ENERAC 2000 will make your tasks easier and more effective New low cost modular design offers you capabilities never before available in a portable instrument Innovations include an expandable base unit easy to follow help messages NOX and SO2 simple 1 2 3 operation computer interface and remote communications A factory check can be conducted by telephone via a built in modem

ENERAC 2000 [illegible] management [illegible]

Plant Operators [illegible]

2 Plant Engineers Supervisors [illegible]

Senior Management [illegible]

[illegible] RESPONSIBILITY [illegible] combustion [illegible] ENERAC 2000 [illegible]

SUPERVISORY RESPONSIBILITY [illegible]

[illegible] ENERAC 2000 [illegible]

[illegible] software

Expanded form [illegible] ENERAC 2000 [illegible]

BEST AVAILABLE COPY

SENIOR MANAGEMENT

[illegible]

NOX and SO2 Options

[illegible]

MEASURED PARAMETERS

	Range	Resolution	Accu
1. AMBIENT TEMPERATURE (Combustion [illegible])	[illegible] F	[illegible]	[illegible] F
2. STACK TEMPERATURE (Type K [illegible])	[illegible]	[illegible]	[illegible]
3. OXYGEN (Electrochemical cell, Life 1 year)	[illegible]	[illegible]	[illegible]
4. OXIDES OF NITROGEN (NOX) (Electrochemical sensor, Life 2 years)	[illegible] PPM	[illegible]	[illegible]
5. CARBON MONOXIDE (Electrochemical sensor, Life 2 years)	[illegible] PPM	[illegible]	[illegible]
6. SULFUR DIOXIDE (Electrochemical sensor, Life 2 years)	[illegible] PPM	[illegible]	[illegible]
7. COMBUSTIBLES (GASEOUS) (Semiconductor sensor, Life [illegible])	[illegible]	[illegible]	[illegible]
8. DRAFT (Piezoelectric sensor)	[illegible] water	[illegible]	[illegible]
9. SMOKE	[illegible]	[illegible]	[illegible]
10. TIME/DATE	Time in hours, minutes, seconds. Date in month, day, year		

COMPUTED PARAMETERS

	Range	Resolution	A
11. COMBUSTION EFFICIENCY (Net [illegible])		[illegible]	
12. CARBON DIOXIDE	[illegible]	[illegible]	[illegible]
13. EXCESS AIR	[illegible]	[illegible]	[illegible]

OPTIONS

Printer: Provides hard copy record of all parameters and remote messages.

Plotter: Plots any parameter as a function of time. Allows both scale and time adjustments.

Environmental Control: The NOX and SO2 options help operators to evaluate performance against EPA and state emission standards. [illegible]

Remote Operations: Telecommunications [illegible] ENERAC 2000 [illegible] with any computer [illegible] connected to a [illegible] anywhere in the world via telephone [illegible] Remote operation eliminates the need for and time consuming travel. Testing can be performed quickly — whenever needed even from your own desk.

Remote operation also allows the ENERAC 2000 to be factory tested at any time from your [illegible]. You can be sure ENERAC 2000 is working [illegible] such as EPA [illegible] compliance and power [illegible] by calling [illegible] factory for a check up.

UNIQUE ENERAC 2000 FEATURES

Expandability	Built in modem
Easy to follow help messages	Data Storage
[illegible] diagnostics	Plotter
Auto-[illegible] timing	Computer control

(Not actual size)

Serial #12345
ENERAC MODEL 2000
Combustion Test Record

FOR: YOUR COMPANY	
TIME: 12:41:35	
DATE: 8/0/87	
FUEL: #5 OIL 18660 BTU/LB	
AMBIENT TEMPERATURE	80 F
STACK TEMPERATURE	540 F
OXYGEN	10.0
CARBON MONOXIDE	20 PPM
CARBON DIOXIDE	8.6 %
COMBUSTIBLE GASES	0.02%
COMBUSTION EFFICIENCY	75.5%
STACK DRAFT (INCHES H2O)	0.12
EXCESS AIR	36%
OXIDES OF NITROGEN	40 PPM
SULFUR DIOXIDE	150 PPM
CARBON MONOXIDE ALARM	50 PPM
TEST PERFORMED BY	

MODEL 2000 SPECIFICATIONS

PHYSICAL

Case: 8 x 13 x [illegible] Aluminum case with [illegible] Weight: 15 lbs.

2. Probe: 13 L x 3/8 OD Inconel probe with aluminum handle and 10' hose (Other lengths optional).

ELECTRICAL

1. Battery: 6V rechargeable cell, 4 hour continuous operation on battery. Quick 4 hour recharge.
2. AC: 120V/60 Hz and 220V/50 Hz optional, 1A.

DISPLAY

[illegible]

PRINTER (SEIKO)

[illegible]

STORAGE

[illegible]

COMMUNICATIONS

RS 232 Port: Full RS 232c port [illegible] programmable (DCE) 300 or 1200 baud, duplex, [illegible] stop bit, no parity.

2. Telephone Port (Optional): [illegible] 1200 baud, auto-answer, modem connects to any modular phone jack [illegible] communication.

(A [illegible] command set sends instructions to the unit for remote control and troubleshooting.)

MISCELLANEOUS

1. [illegible] 15 fuels: 3 in foreground, 12 in background, and standard. Custom fuels available on request.
2. CO Alarm: Selectable 0-2000 PPM in 10 ppm steps.
3. Units: [illegible] in ASH. Pressure: [illegible] steps.
4. Messages: One hundred diagnostic and help messages.
5. Calibration: Autozero on start up. Software span calibration CO, combustibles and draft.

Energy Efficiency Systems Inc
1300 Shame Drive
Westbury, New York 115[illegible]
(516) 997 2100 Toll Free 1 800 645 7490
FAX 516 997 2129 TELEX 4758161 En[illegible]

SPECIFICATIONS SUBJECT TO CHANGE WITHOUT NOTICE

BEST AVAILABLE COPY

Clamp-On Power Datalogger

Measure True Power, Apparent Power, and Power Factor with Built in Datalogger
Optional 3 Phase Adapter and RS 232 Module with PC software

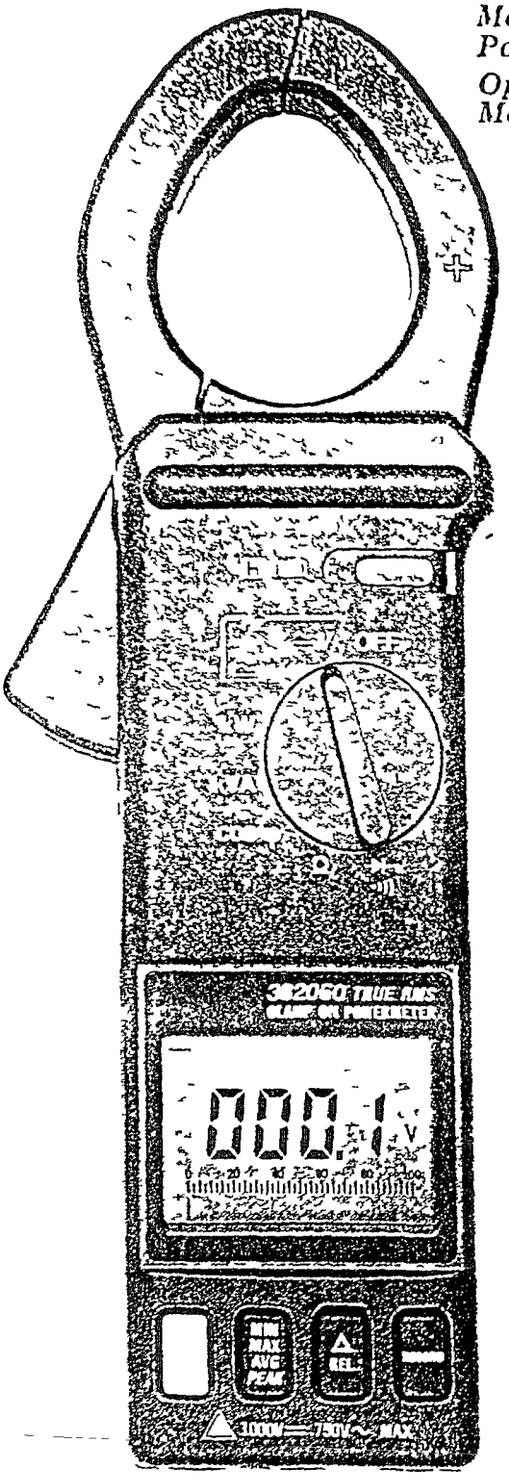

Features

- Displays True RMS Volts Amps Watts MAX MIN and Average
- Displays Phase angle in degrees and CosΦ with inductive or capacitive indication
- Clamp jaws open to 1.8 (46mm)
- Built in datalogger stores up to 1600 readings
- Full function display on large 4 digit 2 LCD with 40 segment bargraph and Peak Hold
- Autoranging or manual range
- Optional 3 Phase Adapter connects to bottom of unit and enables user to measure True Power (KW) Apparent Power (KVA) and Power Factor (CosΦ) of balanced and unbalanced loads, using supplied clip-on leads
- Optional RS 232 module PC software to connect and download data
- Complete with 9V battery and alligator clips test leads

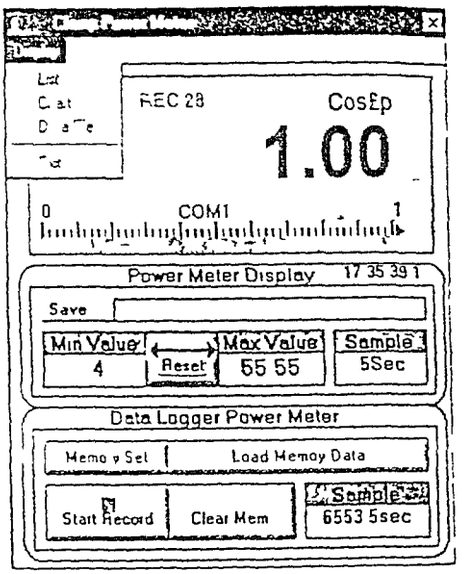

PC software included

SPECIFICATIONS

Display Mode	Range	Accuracy	Resolution
True Power	1.5K W	±(2 rdg 5d)	100W
Apparent Power	900K VA	±(2 rdg +5d)	100VA
Power Factor	3-1	±(1 rdg +1d)	0.01
Peak Current	5K A	2% rdg 5d	0.1A
Peak Voltage	1	±(2 rdg 1d)	0.1V
AC Current (40-400Hz)	500A	±(2 rdg 5d)	0.1A
DC Current	500A	±(2 rdg 5d)	0.1A
AC Voltage (40-400Hz)	750V	±(1.2 rdg 10d)	100mV
DC Voltage	1000V	±(0.7 rdg 10d)	100mV
Crest Factor	3		
Frequency	1Hz-10K 10K-300kHz	±(0.5 rdg +5d)	0.1Hz 100Hz
Resistance	10MΩ	±(1 rdg +5d)	1Ω
Phase Angle	180 to +180		
Continuity	Beeper when <100Ω	±(1 rdg +5d)	0.1Ω
Sample Time		Peak Detect Acquisition Time <100	
Dimensions/Weight		10.2x3.7x1.8 (260x93x45mm)/ 1lb	

ORDERING INFORMATION

Catalog No	Model	Description	Price
EH382060	382060	Clamp-On Power Datalogger	$599.00
EH382061	382061	3-Phase Adapter	79.00
EH382062	382062	Plug in RS 232 Interface Module	79.00
NISTCPP27	—	NIST Traceable Certificate	85.00
NISTCPP28	—	NIST Traceable Certificate with Data	135.00

BEST AVAILABLE COPY

FLUKE

80 Series Analog/Digital Multimeters

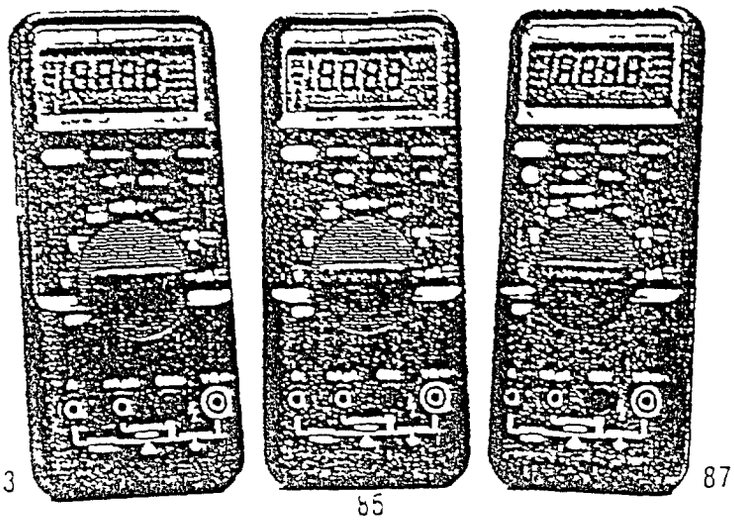

High Performance Meters With 11 Functions and 40 Ranges For a Wide Variety of Electrical and Industrial Applications

- Min Max Average recording mode with Min Max Alert
- Frequency, duty cycle and capacitance measurements
- 1000V rms input protection. Input jacks [illegible] connections
- [illegible] digit 4000 count digital [illegible] display updates 4 times per second
- [illegible] digit mode, 1 ms peak hold, backlit display and [illegible] measurements (87 only)
- Touch Hold™ and Relative modes
- Splash proof and dust proof case. EMI shielded
- Protective holster with Flex Stand™
- Safety designed test lead set
- Made in U.S.A.

LISTED UL 1244

The new Fluke 80 Series (83, 85, and 87) is a [illegible] of the same analog/digital multimeters [illegible] impressive range of capabilities [illegible] frequency, duty cycle and capacitance measurement.

[illegible] designed for electrical as well as industrial applications, the 80 Series features durable [illegible] construction and several unique safety features.

Min Max Average Recording Mode With Min Max Alert™

Stores the highest, lowest, and average of all readings, allowing you to monitor a signal for seconds or days. Selectable response times allow you to specify the time required to [illegible] changes. Min Max Alert™ gives an audible tone for readings above or below previous minimum or maximums.

Frequency, Duty Cycle and Capacitance Measurements

Fluke 80 Series meters have a counter for frequency measurements from 0.5 Hz to 200 kHz, duty cycle measurement from 0.1% to 99.9% of cycle. All three meters measure capacitance from 10 pF to 5 µF. Larger values capacitors may be measured using the analog display in the [illegible] mode.

Input Alert™ and Overload Protection

Input Alert™ provides an audible warning if the input jack connection are not correct for the measurement selected. This reduces the risk of damage to the equipment being tested and to the meter. Fluke 80 Series meters also provide 1,000 volt rms input protection in both ohms and diode test.

Fast 4¾ digit 4000 Count Digital Display, High Resolution Analog Display

Digital display updates 4 times second. For changing or unstable signals, the 87 features a high resolution analog pointer, the 83 and 85 use an analog bargraph. The 83 and 85 also feature Zoom Mode for higher resolution analog readings. Analog display update 40 times per second.

BEST AVAILABLE COPY

4¾ Digit Mode, 1 ms Peak Hold, True rms, Back Lit Display (87 Only)

The [illegible] rms meter and offers [illegible] digit [illegible] high resolution mode plus [illegible] Max Alert™ hold. The backlit display [illegible] settings [illegible] seconds [illegible]

Touch Hold™ and Relative Modes

[illegible] measurement beeps [illegible] display and you're ready to [illegible] Only updates with each new measurement. The Relative Mode [illegible] displays the difference between [illegible] readings [illegible]

Rugged, Sealed Construction

[illegible]

Standard Equipment

[illegible] Flex Stand [illegible] 9V battery [illegible]

Options/Accessories

[illegible] Flex Stand [illegible] measure [illegible]

Basic Accuracy

(% of reading + number of counts)

	83	85	87
DC [illegible]	0.[illegible]	0.1% + 1	0.1% 1
AC Voltage	[illegible]	0.5% + 2	0.7% 2
True RMS		No	Yes
Specified [illegible]		20 kHz	20 kHz
Ohms	[illegible] 1	0.2% 1	0.2% 1
DC Current	0.[illegible] 2	0.2% 2	0.2% 2
AC Current	1.2% 2	0.6% 2	0.6% 2
Frequency	0.005% 1	0.005% 1	0.005% 1
Capacitance	2	1% 2	[illegible] 2

Battery Life

500 hours [illegible]

Three Year Warranty

One year calibration interval

Size

1.25 H x 3.[illegible] W x 7.35 L
(32mm H x 87mm W x 187mm L)

Weight

12.5 oz (0.36 kg)

Order

Fluke 83 Multimeter with holster
Fluke 85 Multimeter with holster
Fluke 87 Multimeter with holster
C81G Optional Grey Holster
C81Y Replacement Yellow Holster

See back cover for additional compatible accessories.

[illegible]

54

LEGO CLEAR COOLER FREEZER STRIP DOOR

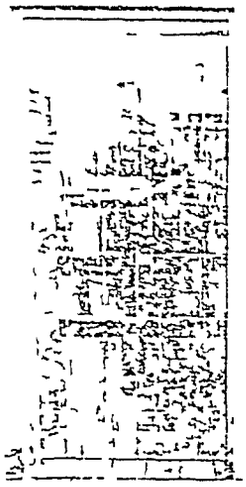

LEGO 90 DAY LIMITED WARRANTY

REPLACEMENT STRIPS

BUCK STRIPS

LEGO FLEXIBLE IMPACT TRAFFIC DOORS

LEGO 90 DAY LIMITED WARRANTY

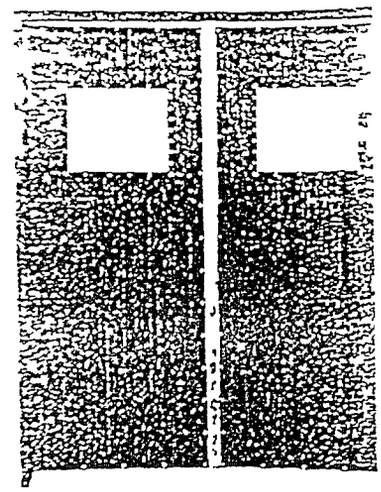

Door Size							
	W	H	W	H			
Single					4W566	572 50	
Bi Parting					4W565	926 00	
Bi Parting					4W566	1057 00	
Bi Parting					4W567	3 0 00	

STEEL FOLDING GATES

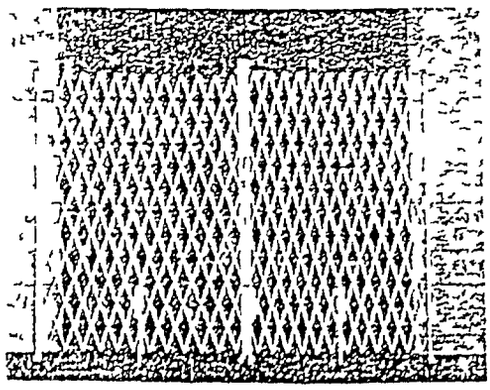

Opening Size			Left Side	Right Side		Stock No	List	Each
6	8					4W946		$175 25
8	10					4W947		216 50
8	10					4W949		242 00
8	10					4W948		250 50
10	12					4W951		342 00
12	14					4W950		339 50
14	16							

FOR REPLACEMENT PARTS—SEE PAGE A2 IN FRONT OF CATALOG

BEST AVAILABLE COPY

[illegible] 30 1993 [illegible] Приложение

ЖИТОМИРСКОЕ ОАО ЭЛЕКТРОИЗМЕРИТЕЛЬ

[illegible] г. ЖИТОМИРА [illegible] 21105

ТЕЛ 2?-54 5?, ФАКС 2?-45 ?0, ТЕЛЕКС ??417?

ПРОТОКОЛ N 41 на 1??7г

[illegible]	[illegible]	[illegible]	[illegible]
Прибор - Ц4?4?М1	115?1	5? ?0	??-10
- Ц4?5?	??21	?-00	? ?0
- Ц4?1?М	115?1	?-00	?? 00
- 4?10?	1111?	5? 00	? 40
- ??104	11?1	7?-00	? 5
- 4?10?	11151	?? 00	?5-20
- Ц4??	1??1	77 00	3? 10
- Ц4?17	11?51	1?5-00	??4-?0
- 4?10?М2	[illegible]	?5-0?	2?-?0
- Э? 4?01	?2?5?	?? ?0	?0-?5
- Э 4?0?	?2??	?-00	? ?0
- Э? 4??	[illegible]	?? 00	?? 40
- Э 4??	??5?	?? ?0	? ?0
- Э? 4??	??? 1	?-00	? ?0
М[illegible] 4?0?	1??1	?-?0	99-5?
?ольтамперметр ЭМ4?05	1??61	?3-00	1??-?0
Вольтамперметр ВАФ85М	1?6?	171-00	?(?-?0
Реле [illegible] ЭМР?	?004/1	44 00	?? 80
Ларин З/и 47111	11651	?? 05	??0-30
П[illegible] Р ???	1?5?1	7-01	? 1?

Начальник ПЭО Е.? ?орчев

BEST AVAILABLE COPY

Насосы для конденсата производства фирмы Армстронг

удобен в обслуживании не требует електроэнергии для отвода конденсата из системы при отсутствии положительного давления

BEST AVAILABLE COPY

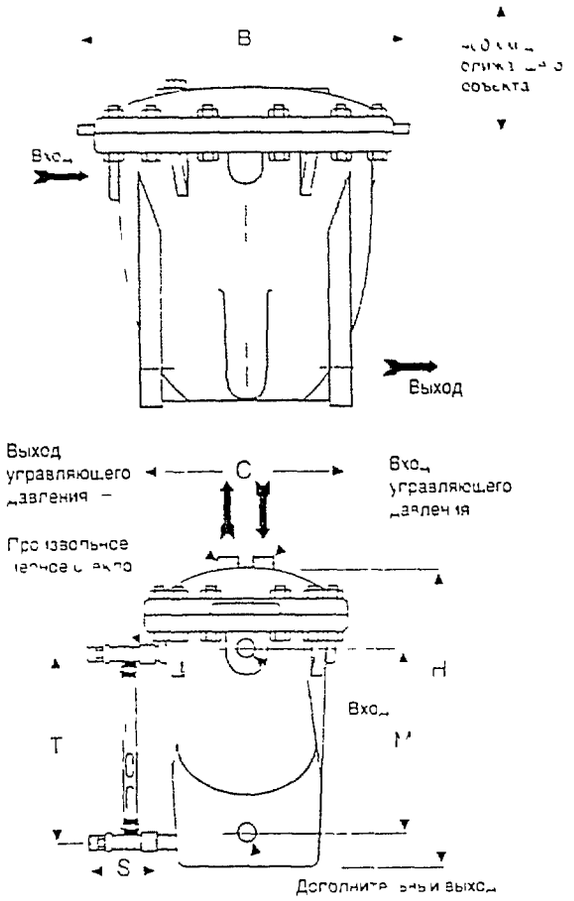

Габариты - вес

	PT [illegible]	PT [illegible]
B	[illegible]	[illegible]
C	[illegible] mm	[illegible] mm
H	[illegible] mm	[illegible] mm
M	290 mm	319 mm
S	[illegible] mm	[illegible] mm
T	[illegible] mm	[illegible] mm
Вес без OK	[illegible]	[illegible]

OK обратный клапан

	PT 204	PT 206	PT 208	PT 312
Соединение на входе и выходе	1	1 1/2	1/2	3 /2
Соединение на входе управляющего давления	2	2	1/2	2
Соединение на выходе управляющего давления	2	2		
Соединение дренажного стакана	2	2	2	2

Материалы

	PT 204–206	PT 308/312
Корпус и крышка	Чугун ASTM A278 класс 30 или подобный	Углеродистая сталь
Уплотнение крышки	Сжатое безасбестовое	Сжатое безасбестовое
Болты	Легированная сталь ASTM [illegible] марка B7	Лег сталь ASTM A193 Марка B7
Гайки	Лег [illegible] сталь ASTM [illegible] марка 2H	Лег сталь ASTM A194 Марка 2H
Узел впускного клапана	Нержавеющая сталь	Нержавеющая сталь
Узел выпускного клапана	Нержавеющая сталь	Нержавеющая сталь
Узел рабочего механизма Поплавок	Нержавеющая сталь	Нержавеющая сталь
Обратный клапан	Бронза	Бронза

Условия эксплуатации

Максимальное рабочее давление 8 8 бар

Макцимальное расчетное давление 10 бар

В любом паровом оборудовании для теплообмена при модулирующем контроле уменьшенная потребность в тепле может дросселировать поток пара до нуля Когда давление уменьшается часто получается что не хватает оставшегося усилия для выталкивания сколившегося конденсата из теплопередающего устройства Это случается когда паровой клапан закрывается и вакуум в теплообменнике образуется на удавление быстро Это препятствует эффективному отводу конденсата Проблема может быть усугублена когда конденсат течет в воздухопровод и/или линию возврата находящуюся под давлением Это может привести к гидроудару а также к повреждениям вызванным коррозией и замерзанием что губительно для вашего парового оборудования

Каково же решение?

1 **Слив конденсата**

Это равносильно выбрасыванию денег в канализацию Более того слив неочищеного конденсата в землю загрязняет окружающую среду вредит людям и может подвергнуть вас ненужной ответственности

или

2 **Купите насос для конденсата фирмы Армстронг** и вы используя для получения енергии возвращающуюся ценную жидкость получите только выгоду а не проблемы с обслуживанием и высокой ценой электронасосов расположенных в удаленных точках

Поэтому скажите до свидания поврежденным уплотнителям и утечкам Скажите привет надежному не требующему электрической энергии возврату конденсата для таких нужд как создание вакуума введение возвратной линии высокого давления или подъема конденсата

Замыкание цепочки бойлер пар конденсат посредством возврата горячего конденсата дает возможность воспользоваться ценной энергией которая в противном случае идет в отходы Например если давление в системе 7 бар возвращающийся конденсат может сохранить до 10% топлива требуемого для производства пара

КУПИТЕ НАСОС ДЛЯ КОНДЕНСАТА ФИРМИ АРМСТРОНГ

потому что внутри его прочного чугунного или стального корпуса имеется простой подпружиненный механизм который обеспечивает импульсную откачку конденсата

Установите насос в любом месте где необходимо даже в углах и труднодоступных местах Запасное одностороннее расположение входного и выходного отверстий делает насос идеальным для таких условий Установленный в систему трубопровода корпус может там и оставаться даже если вам нужно снять крышку и вынуть внутренности для проверки Остальное обслуживание так же просто Например для того чтобы сменить входное и выходное гнезда крышку снимать не надо Ручки вмонтированные в крышку делают обслуживание удобным если вам все таки нужно ее снять

Другой раз кто нибудь попытается убедить вас возвращать конденсат с использованием электроэнергии Свяжитесь с вашим местным представителем Армстронга Он знает как легко можно переделать электронасос И вы будете знать тоже

Пропускная способность насоса (для 150"- или 300 мм уровня наполнения)

Управляющее давление воздуха бар	Давление на выходе бар	PT 204 Пропускная способность кг/ч		PT 206 Пропускная способность кг/ч		PT 308 Пропускная способность кг/ч		PT 312 Пропускная способность кг/ч	
		Вход	Пар	Вход	Пар	Вход	Пар	Вход	Пар
0 5		680	675	680	1225	[illegible]	2604	[illegible]	[illegible]
1 5		945	820	1320	1450	[illegible]	2948	5352	[illegible]
2 5	0 34	1135	955	1635	1545	3357	3100	5554	5357
3		1225	1000	680	1590	3447	3266	5715	5443
4			045		1635		3311		5489
5 5			090		1680		3357		5534
1 5		910	680	1225	1090	2993	2627	4536	4082
2 5		1020	910	1545	1455	3222	3084	5398	5216
3	1	1135	955	1590	1500	3357	3221	5675	5402
4			980		1520		3266		5307
5 5			965		1545		3311		5352
2 5		770	680	1045	955	2858	2676	4536	3629
3 5		910	770	1180	1090	2994	2812	4990	3856
4	1 5	1045	860	1315	1225	3130	2948	5216	4536
4			910		1270		3084		4763
5 5			955		1315		3130		4990
3 5		770	635	910	680	2495	2268	4309	2676
4		910	680	045	910	2767	2540	4536	2900
5	2	000	770	05	1045	2994	2812	4763	[illegible]
6			[illegible]		1090		2858		[illegible]
5 5			870		1135		2948		[illegible]
4 8		910	500	910	500	2495	1814	4309	1360
5	4	050	590	045	600	2676	2177	4536	2540
7			725		860		2495		2722
8 5			780		910		2722		3175

Проконсультируйтесь на заводе

Соединение

- резьбовое BSPT и NPT
- фланцевое (навинчивается)

Замечание

Предпочтительно чтобы управляющее давление (0 7 1 бар) было больше противодавления для того чтобы уменьшить время отвода как и перепад температур пара

Коэффициенты для определения пропускной способности для других уровней наполнения

Уровень наполнения мм	0	150	300	600	900
PT 204	0 7	1	1 1	1 3	1 4
PT 206	0 7	1	1	1	1
PT 308	0 7	0 9	1	1 2	1 3
PT 312	0 7	0 85	1	1 08	1 2

Функционирование

Наполнение

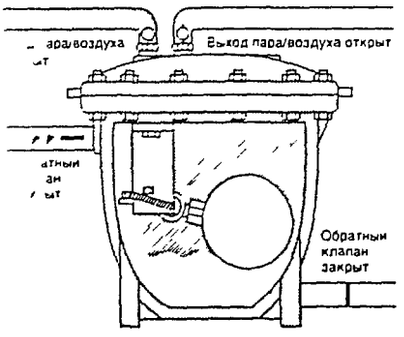

Во время наполнения отверстие подачи воздуха/пара и обратный клапан насоса закрыты

Начало откачивания

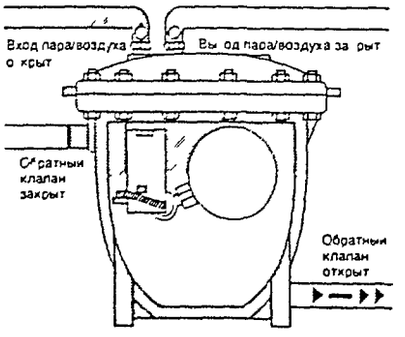

2 С повышением уровня конденсата поплавок поднимается до точки переключения после чего происходит мгновенная смена позиции показанная в шаге 1

Конец откачивания

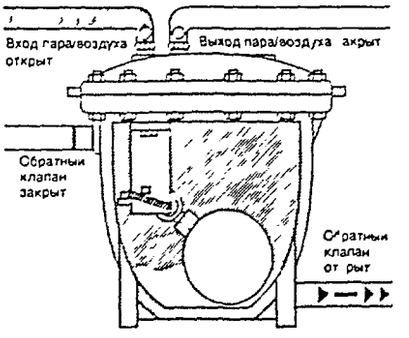

3 Т к уровень конденсата упал поплавок опущен пока вновь не сменятся позиции

Armstrong®

Armstrong International Inc

Parc Industriel des Hauts Sarts B 4040 Herstal/Liege–Belgium Tel (41) 48 01 52 Fax (41) 42 13 61 Telex 41 677 amtrap b

816 Maple Street P O Box 408 Three Rivers Michigan 49093 USA Tel (616) 273–1415 Fax (616) 278–6555

© 1994 Armstrong International Inc

BEST AVAILABLE COPY

Armstrong

Inverted Bucket Steam Trap

Cast Iron for Horizontal Installation

Series 800

16 Bar 250 psi
½"-1¼" PN16

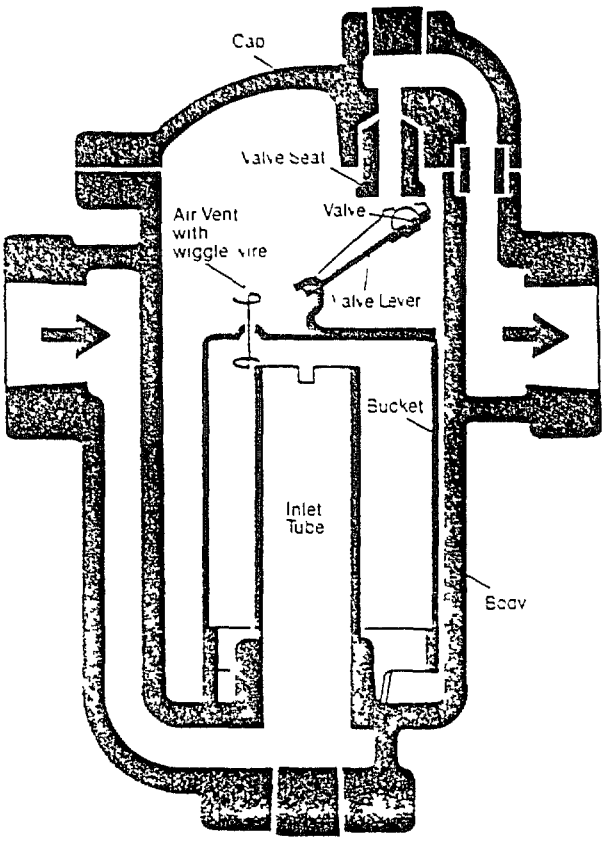

Bucket down–Valve open

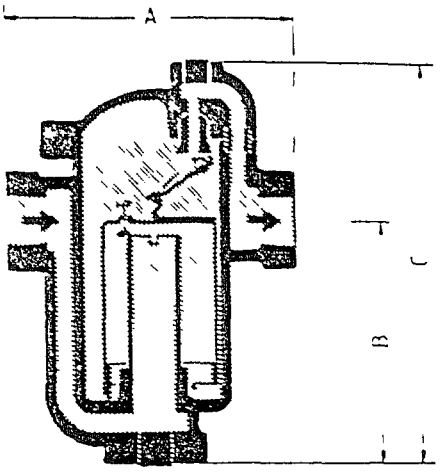

Dimensions–Weight

Type	Size	Dimensions mm A	B	C	Weight kg
800	-	[illegible]	70	108	2.2
8[illegible]	- [illegible]	[illegible]	108	175	2.7
8[illegible]	-	[illegible]	137	202	6.8
8[illegible]	[illegible] - 1	[illegible]	179	299	12.2
8[illegible]	1 - [illegible]	229	198	346	20.4

Materials

Body	GG25 ASTM A 278 Class 30
Internals	All Stainless Steel
Valve and Seat	Hardened Chrome Steel
Drain Plug	Carbon Steel

Description

Manufactured from Cast Iron maintenance free and not affected by dirt

A unique leverage system multiplies the force provided by the bucket to open the valve against system pressure. The mechanism is free floating thus there are no fixed pivots to create wear or friction

As the mechanism is located at the top no dirt can lie over the orifice Particles of dirt will be held in suspension until expelled by the full differential purging action Normally no strainer is required

The orifice is within the water seal preventing live steam loss thus there is no erosion by high velocity steam Automatic air venting is provided by a small hole in the bucket cleaned by a wiggle wire

Inverted bucket traps require no adjustment and drain continuously allowing no condensate to back up No live steam is needed to operate and they are resistant to water hammer

Complete insulation is possible without affecting performance thus helping further to save energy

Maximum Operating Conditions

Pressure	16 bar (250 psi)
Temperature	232°C (450°F)
Back Pressure	99% of inlet pressure

NOTE
Type 800 has a maximum 10 bar (150 psi) differential pressure
All other Types to a maximum 16 bar (250 psi)
Maximum differential pressure for each orifice size may be found from the curves overleaf

Connections

Screwed BSPT and NPT

Flanged

Optional Extras

Spring loaded internal check valve in stainless steel can be fitted in the inlet tube
Thermic bucket vent to discharge large amounts of air on start up

Automatic pop drain can be fitted in the lowest point

Bucket vent scrubbing wire for heavy dirt/oil conditions especially on compressed air applications

Specification

Inverted Bucket Trap TYPE in cast iron with automatic air vent free floating mechanism with the orifice in the top Maximum allowable back pressure 99% of inlet pressure

Please stipulate
Size pressure rating orifice size connection size maximum working pressure differential pressure and maximum condensate load
Special Tests or Test Certificates must be requested at the time of ordering

Trap Selection

1. Steam traps should never be selected according to pipe size but to condensate load
2. Select the correct type for the maximum condensate load e g TYPE 813
3. In the condensate load curve of the selected Type enter the chart at e g 1200 Kgs/h (2650 lbs/h) and go up to e g 3 5 bar (50 psi)
4. The curve over the point where the lines intersect is the correct size of orifice for your requirements e g ¼ orifice The end of each curve is the maximum differential pressure for that orifice

NOTE
The cold water capacity at start up condition will be at least 2 1 of the hot condensate capacity

Capacity Curves

Differential Pressure psi

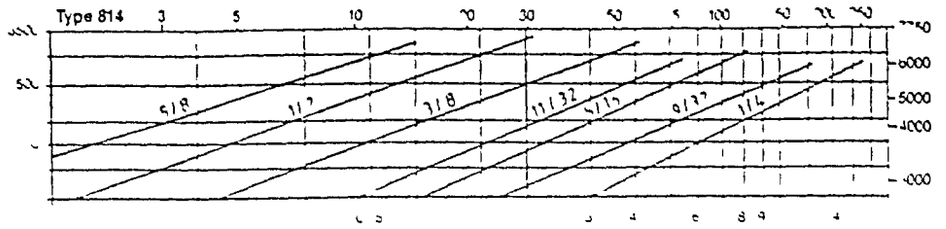

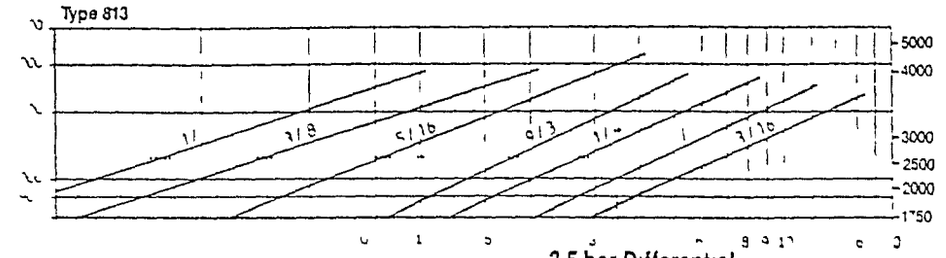

Example

1200 kg/h

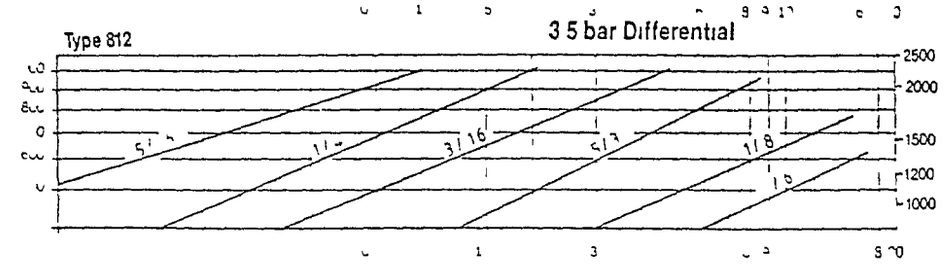

Capacity kg/h

Capacity lbs/h

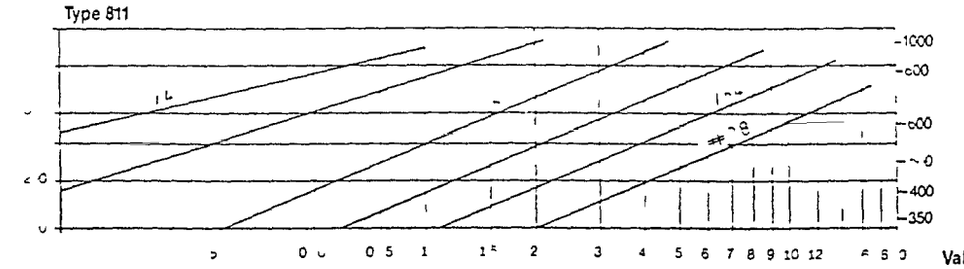

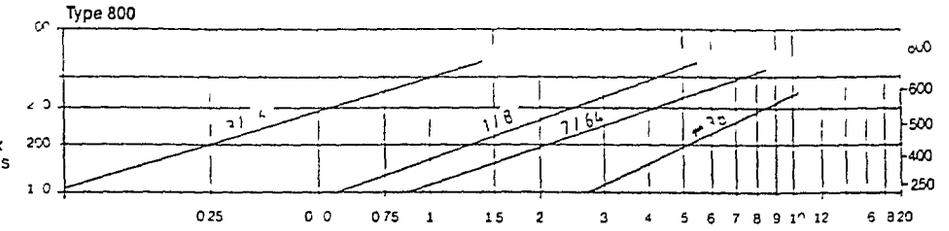

Note
The end of each curve is the max differential press for that orifice

Valve sizes

5/8	= 15 9 mm
1/2	= 12 7 mm
3/8	= 9 5 mm
11/32	= 8 7 mm
5/16	= 7 9 mm
9/32	= 7 1 mm
1/4	= 6 4 mm
7/32	= 5 6 mm
3/16	= 4 8 mm
5/32	= 4 0 mm
1/8	= 3 2 mm
7/64	= 2 8 mm
# 38	= 2 5 mm

Operation

Differential Pressure bar

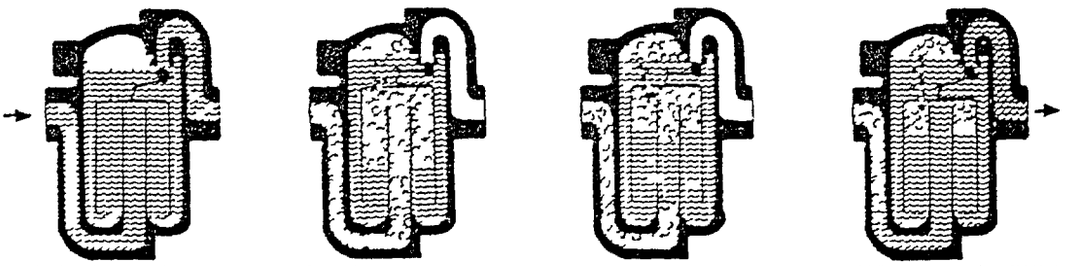

1 The steam trap is installed in dra n l ne between steam heated un t and condensate return header At th s po nt bucket is down and valve s w de open As initial flood of condensate enters the trap and flows unde bottom edge of bucket f l lls trap body and completely subme ges bucket Condensate then discharges through wide open valve to return header

2. Steam also enters trap under bottom edge of bucket where t rises and collects at top mpart ng buoyancy Bucket then r ses and lifts val e towards ts seat until valve s snapped tightly shut Air and carbon d ox de cont nually pass through bucket ent and collect at top of trap.

3 When condensate s slightly above float ng lev t the bucket e erts a s ght pull on the lever The valve does not open however until the condensate lever r ses to the opening line for the e st ng pressure different al between the steam and condensate return header

4 When condensate level reaches open ng line, weight of bucket times leverage exceeds the pressure holding valve to seat Bucket then sinks and opens trap valve. Accumulated air is discharged first followed by condensate. Discharge continues unt l more steam floats bucket and cycle is repeated

Condensate | Air | Steam | Flashing condensate

ARMSTRONG MACHINE WORKS S A.– 4400 HERSTAL–LIEGE–BELGIUM
Tel 041 640867 Telex. 41677 AMTRAP B

United Kingdom Registered Office
Armstrong International Group of Companies,
Holmfirth, Huddersfield HD7 1XN
Tel (0484) 682760 Telex 629759
Fax (0484) 686318

Armstrong

BEST AVAILABLE COPY

КОНДЕНСАТООТВОДЧИК ПОПЛАВКОВО-ГИДРОДИНАМИЧЕСКИЙ /КПГД/

Предназначен для ствода конденсата от пароиспользующего оборудования и устранения проскоков пара в конденсатную линию

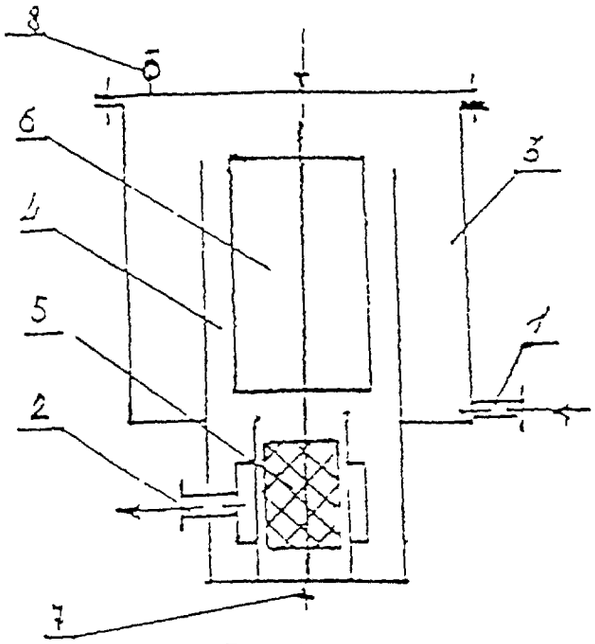

1 Вход парокоденсатной смеси
2 Ствод конденсата
3 Гидросатвор
4 Рабочая камера
5 Запорно-дроссеирующий поршень
6 Поплавок
7 Регулировочные болты
8 Воздушный клапан

Рис 1

ТЕХНИЧЕСКАЯ ХАРАКТЕРИСТИКА

Характеристика конденсатоотводчиков	Марка и номер КПГД				
	1	1м	2	3	3м
аксимальное рабочее авление, атм	10	25	16	10	16
оизводительность, т/ч	0,01 - 2 5		2,5 - 6	5 - 20	
аметр патрубков ода и выхода, мм	25		32	50	
ок окупаемости, час	50 - 200		50 - 70	30 - 55	
ариты, мм	360x290x250		400x330x250	430x360x320	
са, кг , в т ч	19	40	45	50	65
рпус (ст 3)	17,8	38,8	43,3	47,8	62,8
порно-дросселир ган (ст нерж)	1,2	1,2	1,7	2,2	2,2

этры входного и выходного патрубка по желанию заказчика могут быть изменены

spirax sarco

Поплавковый конденсатоотводчик FT 43 DN 15-50

Описание

FT43 — чугунный поплавковый конденсатоотводчик со встроенным автоматическим воздушником. Может быть как горизонтальным с фланцевыми соединениями так и с вертикальными — FT43V.

В конденсатоотводчике с горизонтальными соединениями возможна дополнительная установка ручного игольчатого клапана работающего как паровыпускной затвор (ПВЗ) FT43 C. При необходимости в крышке можно сделать отверстие с соединением ³/₈ BSP или NPT для установки крана осушки.

Ограничения применения (ISO 6552)

Максимальные условия конструкции корпуса PN 16
PMA — Макс. допустимое давление 16 атм
TMA — Макс. допустимая температура 220 C
Холодное гидравлическое испытание 24 атм

Рабочий диапазон

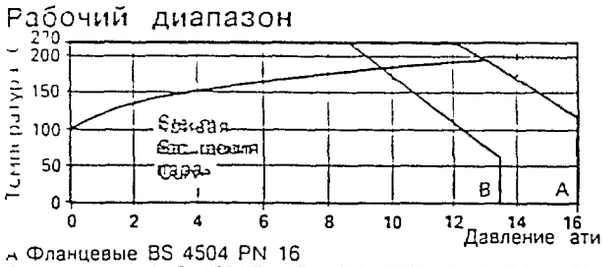

A Фланцевые BS 4504 PN 16
B Фланцевые ANSI 150 (DN15 и 20) ANSI 125 (DN25 до 50)

Изделие не используется при данных параметрах

ΔPMX Макс. дифференциальное давление

DN	FT43 4 5	FT43 10	FT43 14
15 до 50	4 5 атм	10 атм	14 атм

Конденсатоотводчики 40/50DN имеют ограничение PMO равное ΔPMX

Размеры и соединения

DN 15 20 25 40 и 50 стандартные фланцы BS 4504 и PN 16
При необходимости возможна поставка с фланцами ANSI 150 с отверстиями

Материалы

№	Деталь	Материал	Спецификация
1	Корпус	Чугун	DIN 1691 GG 25
2	Болты крышки DN 15 25	Сталь	BS 3692 Gr 8 8
	Штифт крышки Гайки крышки	Сталь	BS 3692 Gr 8 8
3	Прокладка крышки	Армированый листовой графит	
4	Крышка	Чугун	DIN 1691 GG 25
5	Седло клапана DN 15 20 25 (Для вертикальных конденсатоотводчиков DN 15 и 20)	Нерж. сталь	BS 970 431 S29
	Узел главного клапана с антикоррозийным дефлектором DN 40 50	Нерж. сталь	BS 3146 Part 2 Alc 2
6	Прокладка седла клапана DN 15 20 25	Нерж. сталь	BS 1449 304 S11
	Прокладка узла главного клапана DN 40 50	Армированный листовой графит	
7	Узел шарнирной стойки Болты DN 15 20 25	Нерж. сталь	BS 4183 18/8
	Болты узла главного клапана DN 40 Штифты и гайки DN 50		BS 970 304 S16 BS 6105 A4 80
8	Шаровой поплавок и рычаг	Нерж. сталь	BS 1449 304 S16
9	Воздушник	Нерж. сталь	
11	Узел ПВЗ	Нерж. сталь	BS 970 303 S21
12	Прокладка ПВЗ	Мягкая сталь	BS 1449 CS4
13	Уплотнение ПВЗ	Графит	
14	Опорная рамка	Нерж. сталь	BS 1449 304 S16
15	Шарнирная стойка	Нерж. сталь	BS 1449 304 S16
16	Шарнир	Нерж. сталь	

FT 43
DN 15 и 20

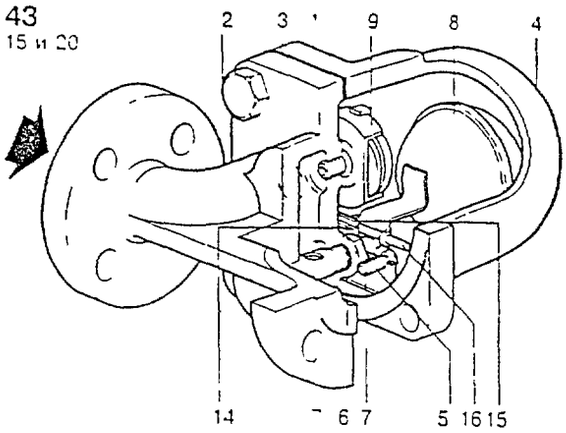

FT 43
DN 25

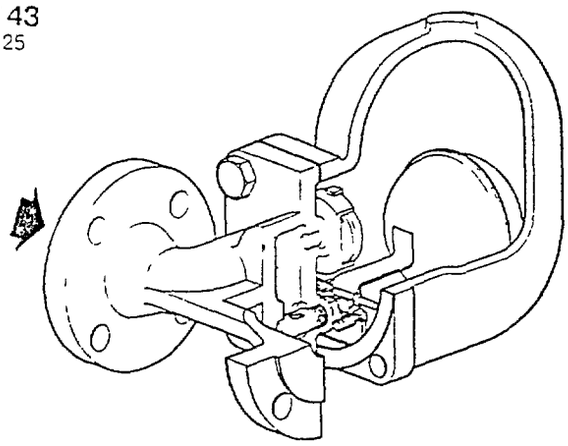

FT 43
DN 40 и 50

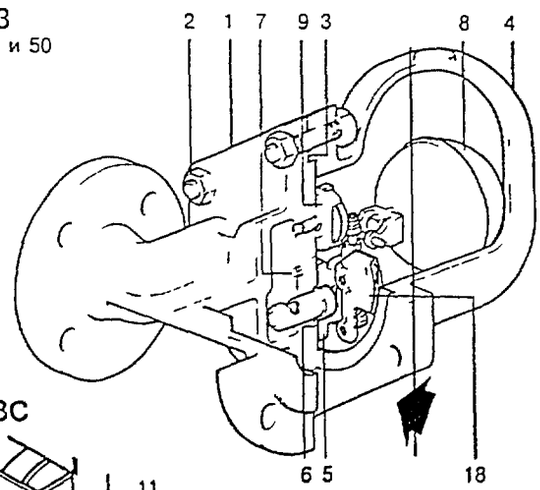

FT43C

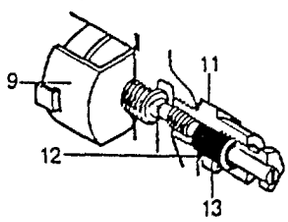

17	Антикоррозийный дефлектор (только DN15 20 и 25 (гориз.) и DN15 и 20 (верт.))	Нерж. сталь	BS 970 431 S29
18	Входной отражатель (DN40 и 50)	Нерж. сталь	BS 1449 304 S15

Местные правила эксплуатации могут ограничивать использование этого изделия значениями параметров ниже указанных
Для совершенствования данного изделия мы оставляем за собой право изменять его технические характеристики

© Copyright 1995

62

spirax sarco

Дисковые обратные клапаны типа DCV 1, 2, 3

Описание

Дисковые обратные клапаны типа DCV 1 2 и 3 разработаны для установки между фланцами Они удобны для применения в широком спектре сред в технологических линиях системах горячей воды пара и конденсата

Ограничение применения

DCV1
Корпус соответствует максимальному давлению PN16
PMO Максимальное рабочее давление 16 ати
TMO Максимальная рабочая температура 260 C
Максимальное давление холодного гидравлического испытания 24 ати
Минимальная рабочая температура 50 C

	DCV2	DCV3
Корпус соответствует макс давлению	PN40	PN40
PMO Максимальное рабочее давление	40 ати	40 ати
TMO Максимальная рабочая температура		
Со стандартной пружиной или пружиной для сильных нагрузок	300 C	300 C
Без пружины	300 C	400 C
Высокотемпературная пружина из никелевого сплава		400 C
Минимальная рабочая температура	50 C	50 C

Диапазон рабочих параметров

DCV1

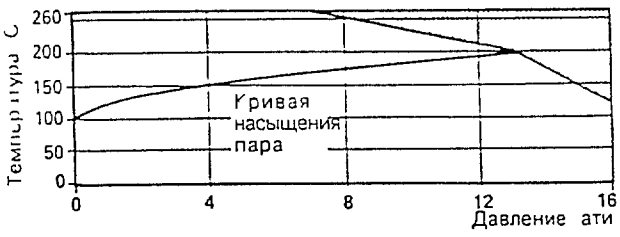

DCV 2 и DCV 3

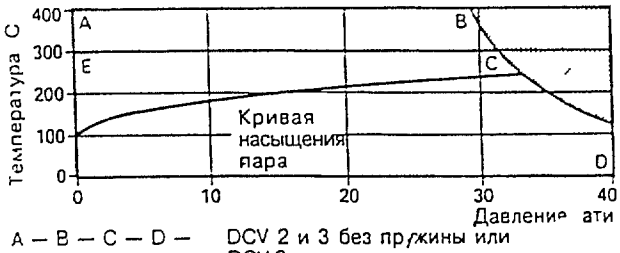

A — B — C — D — DCV 2 и 3 без пружины или DCV 3 с пружиной из никелевого сплава
E — C — D — DCV 2 и 3 со стандартной пружиной

Нерабочая область для данного изделия

Размеры и соединения

DN 15 20 25 32 40 50 65 80 100
DCV 1 2 и 3 могут быть установлены между E and H типа BS10 BS4504/DIN PN6 10 16 25 40 JIS 5 10 16 20 фланцевые соединения со следующими исключениями —
DN 40 50 80 и 100 — не устанавливаются между фланц. соединениями JIS 5
DN 65 и 80 — не устанавливаются между фланцевыми соединениями E типа BS10

Возможный выбор пружин
Жесткие пружины для схем котловой питательной воды Для размеров до DN 65 в моделях DCV1 и DCV2
Никелевый сплав для температуры для температуры выше 400 C для всех размеров только в моделях DCV3

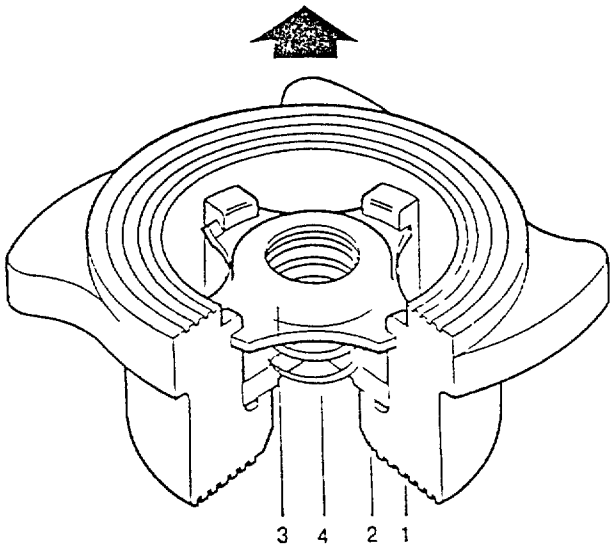

Возможный выбор мягких уплотнений

Viton (для масел и газов)—температурные ограничения 15 C до + 250°C
EPDM (для воды)—температурные ограничения 50 C до + 150 C

Материалы

№	Деталь		Материал	
1	Корпус	DCV1	Бронза	WS 2 1050
		DCV2	Ферритная нержавеющая сталь	WS 1 4313
		DCV3	Аустенитная нержавеющая сталь	WS 1 4581
2	Диск		Аустенитная нержавеющая сталь	BS 1449 316 S 11
3	Фиксатор пружины		Аустенитная нержавеющая сталь	BS 1449 316 S 11
4	Стандартная пружина		Аустенитная нержавеющая сталь	BS 2056 316 S 42
	Пружина для сильных нагрузок		Аустенитная нержавеющая сталь	BS 2056 316 S 42
	Высокотемпературная пружина		Никелевый сплав	N monic 90

Открывающее давление, матм
Стандарт перепад давлении с Нулевым Потоком и пружины из никелевого сплава

ω	Направление потока								
DN	15	20	25	32	40	50	65	80	100
ω	25	25	25	27	28	29	30	31	33
ω	22 5	22 5	22 5	23 5	24 5	24 5	25	25 5	26 5
ω	20	20	20	20	20	20	20	20	20

Там где требуется низкое значение открывающего давления возможна установка клапанов без пружин в вертикальных трубах с направлением потока снизу вверх

Без пружины

ω	2 5	2 5	2 5	3 5	4	4 5	5	5 5	6 5

Жесткие пружины около 700 матм

Стандарты запирания

Стандартные клапаны соответствуют DIN 3230 часть 3 BN 2 Возможен заказ клапанов соответствующих DIN 3230 часть 3 BO3 Мягкие уплотнения соответствуют DIN 3230 часть 3 BN1 и BO1 и поставляются для различных перепадов давления

Стандарты

Изделие разработано и производится в соответствии с BS 7438

Использование данного изделия может быть ограничено если местными правилами эксплуатации установлены параметры ниже указанных
С целью совершенствования данного изделия мы оставляем за собой право изменять его технические характеристики

© Copyright 1994

13

Фильтр-ловушка из чугуна Fig 33

Описание

Фильтры ловушки Y-образные Fig 33 для DN 15 до 50
Стандартные сетки из нержавеющей стали с перфорацией диаметром 0 8 мм
Фильтры ловушки Y-образные Fig 33 для DN 100 до 200
Стандартные сетки из нержавеющей стали с отверстиями диаметром 1 6 мм

Дополнительное оборудование

Кожухи фильтров ловушек

Сталь нержавеющая	Диаметр	1 6 мм (DN 15 до DN 50) 3 мм (DN 15 до DN 200)
	Количество отверстий	40 100 200
Чугун	Диаметр	0 8 (DN 15 до DN 50) 1 6 мм (DN 100 до DN 200) 3 мм (DN 15 до DN 200)
	Количество отверстий	100

Ограничение применения

Корпус соответствует нормали PN 16
Максимальная рабочая температура 300 C
Давление холодного гидравлического испытания 24 бар

Диапазон рабочих параметров

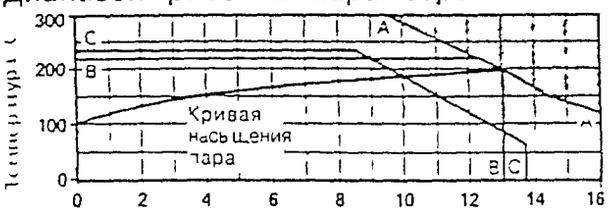

Нерабочая область для данного изделия
A — A Фланц соед BS 4504 PN 16
B — B Фланц соед AS 2129 табл F
C — C Фланц соед ANSI категории 125
(включая DN15 и 20 ANSI категории 150)

Размеры и соединения

DN 15 20 25 32 40 50 65 80 100 125 150 и 200
Станд фланц соед BS 4504 и DIN PN 16 и 10 AS2129 табл F ANSI 150 (DN 15 и 20) ANSI 125 (DN 25 до 200)

Материалы

№	Деталь	Материал	
1	Корпус	Чугун	DIN 1691 GG 20
2	Крышка	DN15 50 SG чугун DN65 200 чугун	DIN 1693 GGG 40 DIN 1691 GG 20
3	Прокладка крышки	Графит листовой армированный	
4	Кожух фильтра ловушки	Сталь нерж	ASTM A240 316L
5	Шпильки крышки Гайки крышки	Сталь Сталь	BS 4439 Gr 8 8 BS 3692 Gr 8

DN 15 до 50

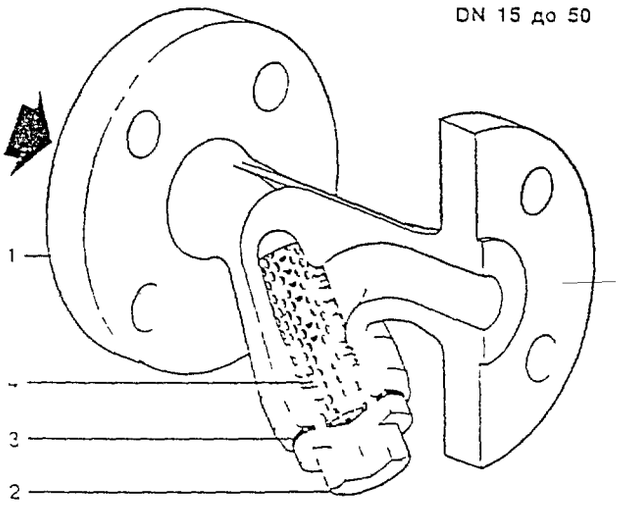

DN 65 до 200

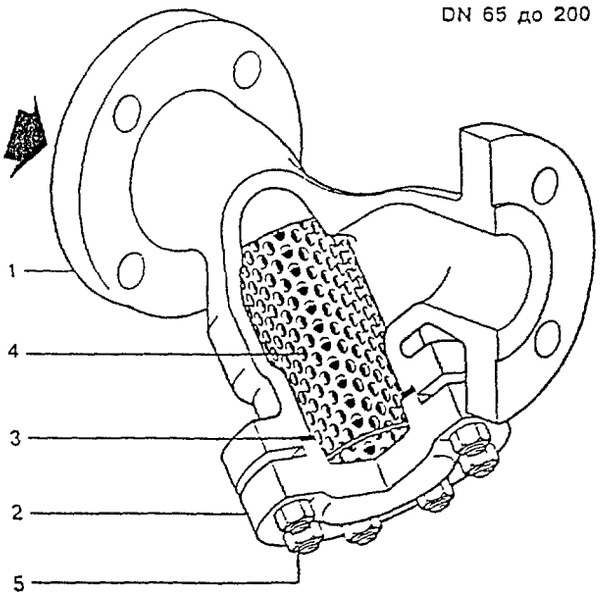

Значения коэффициента kv

DN	15	20	25	32	40	50	65	80	100	125	150	200
>100 отверстий	5	8	13	22	29	46	72	103	155	237	340	588
200 отверстий	4	6	10	17	23	37	58	83	124	186	268	464

Для перевода C_v (Англ) = k_v x 0 97 C_v (США) = k_v x 1 17

Обозначение в заказе

Фильтр ловушка Спайракс Сарко Fig 33 DN25 с фланцевыми соединениями BS 4504 PN16 с кожухом из нержавеющей стали и диаметром отверстий 0 8 мм

Использования данного изделия может быть ограничено если местными правилами эксплуатации установлены параметры ниже указанных
С целью совершенствования данного изделия мы оставляем за собой право изменять его технические характеристики

© Copyright 1995

АКЦІОНЕРНЕ ТОВАРИСТВО

Білицький завод ТЕПЛОЗВУКОІЗОЛЯЦІЯ

256700, смт Коцюбинське Київська обл вул Будівельна 7
Тел/факс (04497) 72-306 72-647 - комерційний відділ

№ п/п	ПЕРЕЛІК ПРОДУКЦІЇ	МАРКА ВИРОБУ (розмір)	ОД ВИМ	ЦІНА (гривн з ур ПДВ)
1	ХОЛСТ БАЗАЛЬТОВИЙ	СУПЕРТОНКЕ БУДІВЕЛЬНЕ	кг кг	4 44 3 24
2	КАРТОН ТЕПЛОЗВУКОІЗОЛЯЦІЙНИЙ	ТК 1-5 1180 x 850 x 5 ТК 1 10 1180 x 850 x 10 ТК-1-6 1000 x 1000 x 6	м м м	3 12 5 52 2 76
3	МАТИ ЗВУКОГЛИНОСЧІ БЗМ	1 100 1000 x1000x100 1-50 1000 x1000x50 1-50 бк 1000 x 1000 x 50 1-30 1000 x 1000 x 30 1-30 бк 1000 x 1000 x 30 2 100 1000 x 500 x 100 2 50 1000 x 500 x 50 2 50 бк 1000 x 500 x 50 2-30 1000 x 500 x 30 2-30 бк 1000 x 500 x 30 4-30 1000 x 1000 x 30 4-50 1000 x 1000 x 50 4-50 бк 1000 x 1000 x 50 5-50 1000 x 500 x 50 5-50 бк 1000 x 500 x 50 6-50 500 x 500 x 50 6-50 бк 500 x 500 x 50 7-50 600 x 600 x 50 7-50 бк 600 x 600 x 50 8-50 1000 x 600 x 50	шт шт шт шт шт шт шт шт шт шт шт шт шт шт шт шт шт шт шт шт	25 80 18 72 15.72 19 80 11 84 18 12 12 60 10 80 13 52 9 72 13 42 19 68 15 00 12 12 10 32 8 -6 6 84 12 24 9 00 13 92
4	МАТИ ТЕПЛОЗВУКОІЗОЛЯЦІЙНІ	ТМ 10-15 1100 x 600 x 15 ТМ 10-20 1100 x 600 x 20	шт шт	10 68 11 04
5	ПЛИТА ЖОРСТКА ТЕПЛОЗВУКОІЗОЛЯЦІЙНА ГІДРОФОБИЗОВАНА	ПЖТЗ 14 1115 x 850 x 14 ПЖТЗ 19 1115 x 850 x 19	м² м²	6 08 9 08
6	СМУГА ТЕПЛОІЗОЛЯЦІЙНА ПДТС	5000 x 100 x 20 5000 x 100 x 30 5000 x 200 x 20 5000 x 300 x 20 5000 x 300 x 30 5000 x 400 x 20 5000 x 400 x 30 5000 x 400 x 40 5000 x 500 x 20 5000 x 500 x 30 5000 x 500 x 40 5000 x 500 x 50 5000 x 500 x 60	м/п м/п м/п м/п м/п м/п м/п м/п м/п м/п м/п м/п м/п	2 28 2 64 3 84 4 92 6 12 7 68 8 64 9 72 8 40 9 36 9 84 10 92 12,96
7	РУЛОННИЙ МАТЕРІАЛ БАЗАЛЬТОВИЙ 5000 x 1000 x	РОМБ С-30 РОМБ - С-50 РОМБ С 70 РОМБ С 100	м² м² м² м²	11 76 13 60 19 68 22 20
8	ШНУР ТЕПЛОІЗОЛЯЦІЙНИЙ	БТШ 10 БТШ 20 БТШ 30	м/п м/п м/п	0 48 0 60 0,84
9	ШНУР ТЕПЛОІЗОЛЯЦІЙНИЙ НАБИВНИЙ	ШБТН 50	м/п	0,60
10	НИТКА КОМПЛЕКСНА	КНБ 9-50	кг	9 72
11	ЖГУТ БАЗАЛЬТОВИЙ	ЖБТН 0-100 ЖБТН 0-150 ЖБТН 0-300 ЖБТН 14-2640	кг кг кг кг	8 52 7,32 6 36 8 96

Банківські реквізити підприємства Р/рахунок № 26003313492 в Бучанському АК УСБ пос Буча Київської обл , МФО 321165, код підприємства 00292729, ІПН 002927210283

65

Українська державна корпорація промисловості будівельних матеріалів «УКРБУДМАТЕРІАЛИ»

АКЦІОНЕРНЕ ТОВАРИСТВО

Білицький завод
ТЕПЛОЗВУКОІЗОЛЯЦІЯ

255700 смт Коцюбинське
Київської обл. вул. Будівельна 7
Тел (04497) 72 3-00
~~Телетайп 3282~~
Факс (04497) ~~[illegible]~~ 72 5-00

Код підприємства 00292729
Код ст Білич 322303
Р рахунок № 24675в5 в Іршанському
відділенні АК УСБ МФО 321165
смт Буча Київської обл

від _____ № _____
на _____ від _____

АО Белицкий завод " Т Е П Л О З В У К О И З О Л Я Ц И Я "
предлагает
высокоэффективные, экологически безвредные изоляционные материалы на основе базальтовых волокон, обладающие малой объемной массой, обеспечивающие полную пожарную безопасность, надежную изоляцию от вулканической жары и космического холода, не выделяют в воздушную и водную среды вредных для здоровья соединений

Область применения изоляция стен, полов, потолков, металлических и других поверхностей различной конфигурации, тепловых агрегатов, труб и трубопроводов, а также в качестве звукопоглощающего слоя (или наполнения в конструкциях с двойной стеной) в строительстве авиа- и судостроении автомобилестроении электротехнической и химической промышленности

КРАТКИЕ ТЕХНИЧЕСКИЕ ДАННЫЕ НА ПЛИТУ

*** БАЗАЛЬТОВОЕ СУПЕРТОНКОЕ ВОЛОКНО БСТВ ***

Соответствует РСТ УССР 1970-86 изм 1

Средний диаметр волокна, мкм, не более	2,0 - 3,0
Плотность, кг/м куб	20,0 - 25,0
Влажность, % ,не более	2
Теплопроводность при 25 град С, Вт/(м К), не более	0,038 - 0,040
Температура применения ,град С	от -260 до +700

* Применяется в качестве тепло- и звукоизоляции, для изготовления теплозвукоизоляционных, звукопоглощающих и фильтрующих материалов и изделий, которые эффективно используются в автомобилестроении, авиастроении , гражданском и промышленном строительстве , теплоэнергетике , а также для грубой очистки воздуха Базальтовое волокно применяется и как армирующий материал

*** КАРТОН ЖЕСТКИЙ ТЕПЛОИЗОЛЯЦИОННЫЙ ТК-1-5 , ТК-1-10 ***

Соответствует ТУ Украины 023 018-95

Формат,мм	длина	1150
	ширина	850
	толщина	5 , 10
Плотность,кг/м куб,не более		150
Гигроскопичность за 24 часа, не более %		0,35
Теплопроводность при 25 град С, Вт/(м К),не более		0,045
Предел прочности при растяжении,МПа, (кгс/см Кв),не менее		0,32(3,2
Температура применения,град С		от -260 до+700

* Является эффективным заменителем асбокартона

66

*** ПЛИТЫ ЖЕСТКИЕ ТЕПЛОИЗОЛЯЦИОННЫЕ ПЖТЗ ***

Соответствует ТУ-88 Украины 023 011 93

Размеры,мм	длина	1115
	ширина	850
	толщина	14, 19
Плотность,кг/м куб,не более		280
Сорбционное увлажнение,%,не более		5,0
Теплопроводность при температуре 25град С, Вт/(м К),не более		0,046
Предел прочности при изгибе,МПа,не менее		0,5
Предел прочности при растяжении,МПа,не менее		0,005
Температура применения,град С		от -260 до +700

* Предназначены для изоляции холодных и горячих поверхностей в строительстве, судостроении (для изготовления панелей, отделки судовых помещений в качестве тепловой и звуковой изоляции), машиностроении, при производстве электробытовых приборов, машин и в других областях, несгораемы нетоксичны Заменитель аналогичных асбестовых плит

*** МАТЫ ЗВУКОПОГЛОЩАЮЩИЕ ТЕПЛОИЗОЛЯЦИОННЫЕ БЗМ ***

Соответствует РСТ Украины 1977-87 изм-1

Размеры,мм	длина	500, 600, 1000
	ширина	500, 600, 1000
	толщина	30, 50, 100, 200
Плотность,кг/м куб		от 34 до 264
Теплопроводность Вт/(м К),не более при 25 град С		0,037
	при 125град С	0,068

Нормальный коэффициент звукопоглощения матов при толщине 15 мм и при частоте 500-2000 Гц 0,35-0,78

Среднеарифметический реверберационный коэффициент звукопоглощения мата толщиной 15 мм,не менее, в диапазоне частот

среднечастотный	0,6
высокочастотный	0,8

* Применяются в качестве звукошумопоглощающего покрытия (наполнения)

*** МАТЫ ТЕПЛОИЗОЛЯЦИОННЫЕ БАЗАЛЬТОВЫЕ ТМ-10 ***

Соответствует РСТ Украины 1981-87 изм-1

Размеры мм	длина	1100
	ширина	600, 700, 800
	толщина	5, 10, 15, 20
Плотность,кг/м куб		от 41 до 66
Теплопроводность при температуре 25 град С,Вт/(м К),не более		0,057
Предельная температура применения, град С		+ 450

* Применяются для изоляции холодных и горячих поверхностей в строительных обьектах, авиастроении, судостроении и машиностроении

*** ПОЛОСЫ ДЛИННОМЕРНЫЕ ТЕПЛОИЗОЛЯЦИОННЫЕ ПАТС ***

Соответствует ТУ-88 Украины 023 015 94

Размеры,мм	длина	не менее 5000
	ширина	100, 200, 300, 400, 500
	толщина	20, 30, 40, 50, 60
Теплопроводность,Вт/(м К)		0,040
Предельная температура применения ,град С		+ 450

* Полосы применяются для изоляции труб, тепловых агрегатов, систем общего и специального назначения в различных отраслях народного хозяйства

BEST AVAILABLE COPY

ДОГОВОР №_____

Бетинское АП "Теплосетьэксплуатация", именуемое в дальнейшем "Поставщик" в лице _____
действующего на основании _____
и _____
именуемый в дальнейшем "Покупатель", в лице _____
действующего на основании _____
заключили договор о нижеследующем

1 Поставщик обязуется изготовить и поставить а "Покупатель" принять и оплатить продукцию

№ п/п	Наименование продукции	Единица измерен	Всего	В т ч по кварталам			
				I	II	III	IV

2 По качеству поставляемая продукция соответствует (указать ГОСТ, СТ, ТУ РСТ)
_____

3 Цены на продукцию договорные Расчеты за поставляемую продукцию осуществляются путем предоплаты
4 По вопросам изменения и дополнения по настоящему договору в отношении количества сторон поставки количества продукции могут производиться только по письменному согласию сторон на основании письма или телеграммы которые являются неотъемлемыми частями договора
5 Поставщик предоставляется право до разовой отгрузки продукции
6 Базисная норма отгрузки _____
7 Отгрузка продукции производится _____
8 Дополнительные условия
_____

9 Стороны обязуются при исполнении настоящего договора на своих сотрудничестве в соблюдении только содержащихся в договоре требований поддерживать деловые контакты и принимать все необходимые меры для обеспечения эффективности развития их хозяйственных связей
10 Настоящий договор действует с _____ по _____
11 Юридические адреса сторон

"Поставщика"		"Покупателя"	
Почтовый	255700 п Кощобинского Киевской обл ул Строительная, 7	Почтовый	
Телетайп	152826 "Зевл"	Телетайп	
Факс	(04497) 72-647	Факс	
Телефоны	сбыт (04497) 72-192 (04497) 72-306 ПТО (04497) 71-605 Зам по коммерческим вопросам (04497) 71-394	Телефоны	
Р/счет	581702 в Интегрсом отд Ак УСБ п Буча Киевской обл 255720 МФО 321165	Р/счет	
Грузовой	ст Бетинки Юго-Западной ж/д код ст 322005	Грузовой	

"Поставщик" "Покупатель"

Фирма «ВИПОЛ» Зак. № 6283 т 2000 1993

BEST AVAILABLE COPY

ОАО «Комбинат Стройиндустрии»

[illegible]

№	Наименование продукции	Ед. изм.	Цена без НДС	Цена с НДС
1	Линолеум [illegible] (нетепленный)	м2	5 05	6 73
2	Линолеум [illegible] (утепленный)	м2	7 25	8 [illegible]
3	Линолеум [illegible] (утепленный)	м2	5 65	7-02
4	[illegible]	[illegible]	[illegible]	[illegible]
5	Рубероид РКП [illegible]	м2	[illegible]	[illegible]
6	Пергамин [illegible]	м2	6 60	[illegible]
7	ДВП [illegible]	[illegible]	75	1 38
8	Маты [illegible]	м2	2-25	3 60
9	[illegible]	м2	2-35	3 51
10	Картон [illegible]	тн	800 00	960-00
11	Скобы [illegible]	шт	137-50	165-00
12	[illegible]	шт	[illegible]	291-60
13	[illegible]	шт	367 00	440-40
14	[illegible]	шт	460-00	552 00
15	[illegible]	шт	525 50	630-60
16	[illegible]	шт	45-60	54 96
17	[illegible]	шт	[illegible]	12 00
18	[illegible]	шт	25-00	30-00
19	[illegible]	шт	26 00	30 72
20	[illegible]	шт	20-00	24-00
21	[illegible]	шт	[illegible]	2-00
22	Плиты [illegible]	шт	6 70	8 04
23	[illegible]	[illegible]	11 70	[illegible]
24	[illegible]	шт	26-70	32 04
25	[illegible]	шт	35 00	42 00
26	Плиты заборные ГС 2 (высота 2580 длина 2860)	шт	75 00	90-00
27	Башмак для плит заборных	шт	23-00	27 60
28	Плиты тротуарные (500×500×60)	шт	5 30	6 30
29	Товарный бетон М 100	м3	50 00	60 00
30	М-150	м3	54-75	64-50
31	М-200	м3	57 50	69-00
32	М-300	м3	65 75	79-50
33	М-400	м3	73 75	88 50
34	Цементный раствор М 50	м3	37 50	45-00
35	М-75	м3	41 25	49 50
36	М-100	м3	46-25	55 50
37	М-150	м3	52 50	63-00

ЖЕЛЕЗОБЕТОННЫЕ ПЛИТЫ ПЕРЕКРЫТИЯ (цены с НДС)

ПК 8 Х 24 Х 12	ШТ	60 60	ПК 8 Х 48 Х 12	ШТ	135-00
ПК 8 Х 27 Х 12	ШТ	67 20	ПК 8 Х 51 Х 12	ШТ	137 40
ПК 8 Х 30 Х 12	ШТ	70-20	ПК 8 Х 54 Х 12	ШТ	138 00
ПК 8 Х 33 Х 12	ШТ	90-00	ПК 8 Х 60 Х 12	ШТ	139 80
ПК 8 Х 36 Х 12	ШТ	94-20	ПК 8 Х 63 Х 12	ШТ	140 40
ПК 8 Х 42 Х 12	ШТ	116			

ПРИМЕЧАНИЯ

- ширина полотна линолеума 1500 мм 3 6 1 8 толщина линолеума с утеплителем 6 (мм)
- площадь одного рулона линолеума 30 м2 рубероида 15м2 пергамина 20 м2
- размер ДВП (1850×1300×12)мм
- клей КДП производится на основе каучука DuPont Dow elastomers
  расфасовывается металл бочки нет 9 до 200 кг
- при покупке рубероида или пергамина свыше 1450 суммы (вагонная норма) скидка 5%

Коммерческий отдел т 295 46-69 294-15-22 295-02-31
Группа маркетинга рекламы и заказов т 294 13 23 201 11 11 факс 295 61 61

BEST AVAILABLE COPY

ВАТ "Васильківський завод холодильників"

м Васильків, Київська обл, вул Соборна, 72

тел (04471) 5-15-66
5-15-74

факс (04471) 5-14-04
5-13-22

ТАБЛИЦЯ

орієнтовних цін на труби попередньоізольовані пінополіуретаном

Діаметр труби внутр мм	Діаметр труби зовн, мм	Ціна в грн за 1 м пог
57	140	51
76	160	53
87	180	86
108	200	102
114	200	102
125	225	110
157	250	186
219	315	217
250	400	321
300	450	463
400	560	564
450	696	646
500	710	880

1) Ціна вказана на складі заводу, в тому числі ПДВ
2) В комплект входить з'єднувальна муфта та розфасований ППУ на стик
3) Оптовим покупцям - знижка
4) Труби можуть бути виготовлені з труб замовника

ТАБЛИЦЯ

цін сегмент в із ППУ для ізоляції трубопроводів

Діаметр труби	Товщина ізоляції в мм	Вага в кг	Оптова ціна в грн
60	35	0 42\0 63	13 69\15 92
76	35	0 49\0 73	14 42\17 00
89	35	0 55\0 82	15 06\17 96
114	40	0 77\1 16	17 42\21 59
139	40	0 90\1 35	20 34\25 17
168	40	1 05\1 57	21 95\27 51
219	40	1 30\1 95	24 62\31 58
273	45	1 80\2 70	31 49\41 15
323	45	2 08\3 12	34 49\45 63
355	45	2 26\3 40	37 95\50 15
406	45	2 55\3 80	42 59\55 98
457	50	3 18\4 78	49 34\66 47
508	50	3 50\5 26	54 27\73 13
610	50	4 15\6 20	62 78\84 74

В колонках вага і оптова ціна чисельник - для густини 40 кг/м,
знаменник - для густини 60 кг/м

Ціна вказана для комплекту сегментів (дві половинки) на складі заводу, в тому числі ПДВ

Довжина секції один метр

70

ВАТ "Васильківський завод холодильників"

Обсяги виробництва попередньоізольованих труб з ел[illegible] муфт діаметрів від [illegible] до [illegible] мм. Довжина труб стандартна до 19 метрів. Труби відповідають ТУ 88 [illegible] 012-92 "Труби з теплоізоляцією з пінополіетилену".

ВАТ "Васильківський завод холодильників" веде підготовку виробництва для виготовлення труб діаметрами від 219 до 1420 мм і довжиною до 18 метрів.

Ми по бажанню замовників можемо комплектувати всім необхідним для будівництва теплової мережі: прямі труби, повороти, перехоли, трубопроводна арматура, відводи і все де попередньоізольованого пінополіетаном. Ми також можемо дати консультації по будівництву мереж з попередньоізольованих труб.

Труби по бажанню замовників можуть бути виготовлені з системою аварійної сигналізації чи без неї. Система аварійної сигналізації дозволяє визначити місце незручності зволоження теплоізоляції, що дозволяє швидко локалізувати пошкодження.

Крім виготовлення систем труб на заводі планується проводити монтаж теплових мереж. Обслуговує ВАТ "Васильківський завод холодильників" з гарантійним забезпеченням робіт та серійним обслуговуванням, а також створення центру по підготовці фахівців для монтажу мереж.

Для ремонту існуючих теплових мереж завод виготовляє сегменти із пінополіетаном, які надягають на труби з подальшою гідроізоляцією класичними методами.

Схема теплоізоляції труб фрагментами із ППУ

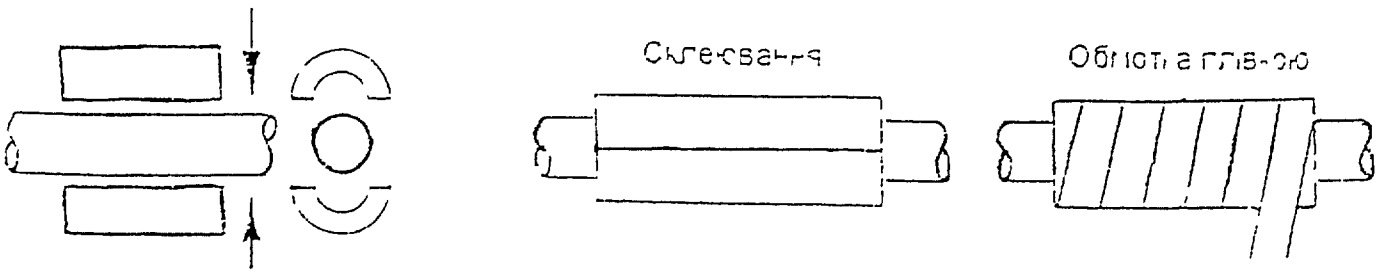

Додаткову інформацію Ви можете отримати за адресою

255130, м.Васильків, Київської обл., вул.Соборна,72
ВАТ "Васильківський завод холодильників"
тел. (04471) 5-15-66, 5-15-74
факс (04471) 5-14-04, 5-13-22

Система труб для теплових мереж і трубопровідного транспорту

Система труб для теплових мереж і трубопровідного транспорту являє собою труби попередньоізольовані пінополіуретаном в заводських умовах, стикові муфти і фасовані частини

Попередньоізольована пінополіуретаном труба

1. Сталева труба, яка в залежності від області застосування та діаметру може бути
   - водогазопровідною,
   - безшовною холоднодеформованою,
   - безшовною гарячекатаною

   Сталева труба може бути з внутрішнім антикорозійним покриттям (цинкування, емаль покриття). Внутрішня труба також може бути з харчового поліетилену.
2. Для теплоізоляції використовується пінополіуретан
   - це ефективна теплоізоляція, що має однорідний теплоізоляційний шар з хорошими механічними властивостями і низькою теплопровідністю,
   - не має в своєму складі фреонів, які порушують озоновий пояс Землі,
   - працює при температурах до 120°С, витримує короткочасні підвищення температури до 140°С
3. Зовнішня труба виготовляється
   - при безканальній підземній прокладці мереж із поліетилену, або поліпвінілхлориду,
   - при зовнішній прокладці мереж із оцинкованого листа, або алюмінієвого типу "стіро"

З'єднувальна муфта

З'єднувальна муфта являє собою відрізок поліетиленової труби, яку надівають на місце з'єднання при монтажі трубопроводу. З'єднання заповнюють пінополіуретаном, який розфасований в ємкості і постачається разом із теплоізольованими трубами

Фасонні частини

Фасонні частини являють собою відводи, повороти та стаціонарні нерухомі точки попередньоізольовані пінополіуретаном

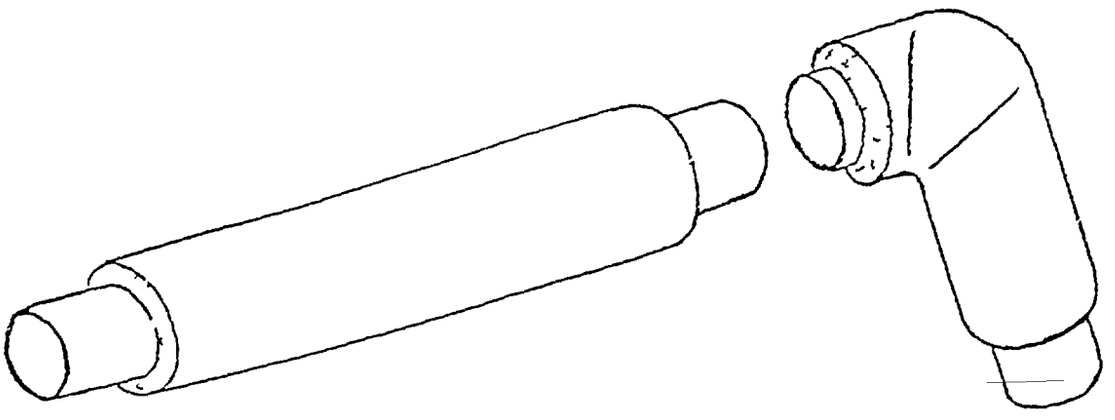

97/694

ПРАЙС-ЛИСТ
ОАО "ПОЛТАВСКИЙ ЗАВОД ГАЗОРАЗРЯДНЫХ ЛАМП"

Адрес Полтава ул Заводская 3 тел/факс 66-49 90 66-09-01

Наименование изделия	Ед изм	Партия	Форма оплаты (Цена за одну продукцию в грн) Предоплата	Последующая	Бартер
Лампы люминесцентные низкого давления					
18 Вт	шт	1-3000	1 98	2-10	2-22
		3000-7000	1-92	2-04	2-10
		7000-15000	1-80	1-92	1-98
		свыше	1-74	1-80	1-92
20 Вт	шт	1-3000	1 98	2-10	2-22
		3000-7000	1 92	2-04	2-10
		7000-15000	1-80	1-92	1-98
		свыше	1-74	1-80	1-92
40 Вт	шт	1-3000	2-28	2-40	2-52
		3000-7000	2-16	2-28	2-40
		7000-15000	2-04	2-16	2-28
		свыше	1-92	2-04	2-46
80 Вт	шт	1-3000	2-88	3-00	3-18
		3000-7000	2-76	2-94	3-06
		7000-15000	2-64	2-82	2-94
		свыше	2-52	2-64	2-88
Лампы ртутные высокого давления общего назначения					
ДРЛ 125 Вт	шт.	1-1000	10-08	10-62	11-16
		1000-3000	9-72	10-20	10-74
		3000-7000	9-18	9-60	10-08
ДРЛ 250 Вт	шт.	1-1000	10-08	10-62	11-16
		1000-3000	9-72	10-20	10-74
		3000-7000	9-18	9-60	10-08
		свыше	8-88	9 36	9-84
ДРЛ 400 Вт	шт.	1-1000	12-06	12-66	13-32
		1000-3000	11-58	12-18	12 78
		7000-3000	10-92	11-46	12-06
		свыше	10-62	11-16	11-76
Лампы натриевые высокого давления					
ДНаС 210 Вт	шт	до 250	11-82	12-42	
		250-1000	11-58	12-18	
		свыше	11-28	11-82	
ДНаТ 100 Вт	шт.		10-14		
Лампы накаливания кварцевые галогенные					
КГМ 12х60 Вт	шт		1-20		
АКГ 12х55 Вт	шт		4,50		
Светильник ПРУ	шт.		40-26		
Стартеры 220 В	шт.	1-1000	0-48	0-54	
		1000-5000	0-42	0-48	
		свыше	0-36	0-42	
Щетка "Полтавчанка"		1-3000	1-20		
		3000-10000	1-14		
		свыше	1-08		
"Дорожная"		1-3000	1-08		
		3000-10000	1-02		
		свыше	0-96		
"Театральная"		1-3000	0-84		
		3000-10000	0-78		
		свыше	0-78		
Кружка сувенирная			0-78		

тел 66-49-90 Шмыгло Тамара Григорьевна

D.MEASUREMENT AND DATA COLLECTED

D.1.Statistical data of 1995 through 1997

Annual report of enterprise
for 1995

			Codes
		Date (year, month, date)	
Enterprise	Yalta meat processing plant		443714
Territory	Ukraine		
Ownership form	joint-stock company		
State authority	Crimea meat association		
Type of activity	industry, commerce		
Unit of measurement	mln Ukr Krb	Check sum	

Form No 1

Balance of enterprise

ASSETS	Line code	Beginning of year	End of reporting period
1	2	3	4
I FIXED ASSETS AND OTHER NON-CURRENT ASSETS			
Fixed assets			
residual value	10	49743	55682
depreciation (02)	11	32119	31768
original cost (01)	12	81862	87450
Work-in-process capital investments (33, 35, 61)	30	373	2049
Equipment (07)	35	234	724
Long-term financial investments (58)	40		
Settlements with shareholders (75)	50		
Total for Section 1	**70**	**50350**	**58445**
II INVENTORIES AND COSTS			
Production stock (05-08, 10)	80	31273	59774
Low - value and fast - depreciating items			
residual value	100	79	1278
Expenses of future periods (31)	120		
Finished goods (40)	130	1058	1918
Goods			
buying cost (41)	140	1147	4925
Total for Section II	**150**	**33833**	**68251**
III CASH, SETTLEMENTS AND OTHER CURRENT ASSETS			
Goods shipped			
payment is not due (45)	160		
Settlements with debtors			
for goods, works and services payment is not due (62, 76)	170	8109	21088
with budget (68)	200	1620	3678
with employees under other transactions (73)	210	1	34
with other debtors	240	4	56
Cash			
cash (50)	260		
settlement account (51)	270	5797	19158
currency account (52)	280		
other monetary items (54, 55, 56)	290	423	548
Borrowed funds (82)	300		
Other current assets	310	2	247
Total for section III	**320**	**15956**	**46183**
Balance (sum of lines 070, 150, 320, 330 and 340)	**350**	**100139**	**178889**

Form No 1

Balance of enterprise

ASSETS	Line code	Beginning of year	End of reporting period
1	2	3	4
I FIXED ASSETS AND OTHER NON-CURRENT ASSETS			
Fixed assets			
residual value	10	49743	55682
depreciation (02)	11	32119	31768
original cost (01)	12	81862	87450
Work-in-process capital investments (33, 35, 61)	30	373	2049
Equipment (07)	35	234	724
Long-term financial investments (58)	40		
Settlements with shareholders (75)	50		
Total for Section 1	**70**	**50350**	**58445**
II INVENTORIES AND COSTS			
Production stock (05-08, 10)	80	31273	59774
Low - value and fast - depreciating items			
residual value	100	79	1278
Expenses of future periods (31)	120		
Finished goods (40)	130	1058	1918
Goods			
buying cost (41)	140	1147	4925
Total for Section II	**150**	**33833**	**68251**
III CASH, SETTLEMENTS AND OTHER CURRENT ASSETS			
Goods shipped			
payment is not due (45)	160		
Settlements with debtors			
for goods, works and services payment is not due (62, 76)	170	8109	21088
with budget (68)	200	1620	3678
with employees under other transactions (73)	210	1	34
with other debtors	240	4	56
Cash			
cash (50)	260		
settlement account (51)	270	5797	19158
currency account (52)	280		
other monetary items (54, 55, 56)	290	423	548
Borrowed funds (82)	300		
Other current assets	310	2	247
Total for section III	**320**	**15956**	**46183**
Balance (sum of lines 070, 150, 320, 330 and 340)	**350**	**100139**	**178889**

LIABILITIES	Line code	Beginning of year	End of reporting period
1	2	3	4
1 SOURCES OF OWN AND SIMILAR FUNDS			
Statutory fund (capital) (85)	400	2880	9540
Reserve fund (88)	410	6491	32049
Capital financing (93, 94)	420	607	2773
Special-purpose funds and target financing (87, 88, 89)	430	72772	107606
Settlements with shareholders (75)	450		
Profit			
used in the accounting year (81)	481		64209
of accounting year (80)	482		64209
Total for Section I	**490**	**93088**	**153980**
II LONG-TERM LIABILITIES			
Bank loans (92)	500		
Borrowed funds (95)	510		
Total for Section II	**530**		
III SETTLEMENTS AND OTHER LIABILITIES			
Settlements with creditors			
for goods, works and services payment is not due (60, 76)	630	5547	1794
budget (68)	670	4069	4891
wage payments (70)	700	1902	4450
with other creditors (71,76)	720	46	110
Total for section III	**750**	**17320**	**18909**
BALANCE (sum of lines 495, 530, 750)	**760**	**100139**	**172889**

Form No 2

I Financial results

Indicator	Line code	Gains	Losses
Revenue (gross income)	10	59032	
VAT	15		99171
Production costs	40		429406
Results from sales of primary products	50	61455	
Results from sales of other products	60	655	
Revenues and expenses from other operations	70	2126	27
Total gains and losses	80	592813	528604
Pre-tax income or loss	90	64209	
Actual volume of production	100	324376	

Annual report of enterprise
for 1996

			Codes		
		Date (year, month, date)	27	1	97
Enterprise	Yalta meat processing plant		443714		
Territory	Ukraine				
Ownership form	collective				
State authority	Crimea meat association				
Type of activity	industry, commerce				
Unit of measurement	thousand Hr	Check sum			

Address 1, Isobilna str, Yalta

81

Form No 1
Balance of enterprise

ASSETS	Line code	Beginning of year	End of reporting period
1	2	3	4
I FIXED ASSETS AND OTHER NON-CURRENT ASSETS			
Fixed assets			
residual value	10	575295	3624075
depreciation (02)	11	329509	2547468
original cost (01)	12	904804	6171543
Work-in-process capital investments (33, 35, 61)	30	39046	30400
Equipment (07)	35	10309	49334
Long-term financial investments (58)	40		
Settlements with shareholders (75)	50		
Total for Section 1	**70**	**824417**	**3895259**
II INVENTORIES AND COSTS			
Production stock (05-08, 10)	80	430465	568743
Low - value and fast - depreciating items			
residual value	100	12396	13424
Expenses of future periods (31)	120		
Finished goods (40)	130	7947	25734
Goods			
buying cost (41)	140	47491	107275
Total for Section II	**150**	**851349**	
III CASH, SETTLEMENTS AND OTHER CURRENT ASSETS			
Goods shipped			
payment is not due (45)	160		
Settlements with debtors			
for goods, works and services payment is not due (62, 76)	170	154055	254259

1	2	3	4
with budget (68)	200	273	1498
with employees under other transactions (73)	210	125	3368
with other debtors	240	2725	6096
Cash			
cash (50)	260	7559	470
settlement account (51)	270	183356	223886
currency account (52)	280		1047
other monetary items (54, 55, 56)	290	2311	2786
Borrowed funds (82)	300		
Other current assets	310	3648	17393
Total for section III	**320**	**354612**	
BALANCE (sum of lines 070, 150, 320, 330 and 340)	**350**	**2033378**	**5593984**

LIABILITIES	Line code	Beginning of year	End of reporting period
1	2	3	4
1 SOURCES OF OWN AND SIMILAR FUNDS			
Statutory fund (capital) (85)	400	1841750	1841750
Reserve fund (88)	410		27778
Capital financing (93, 94)	420		
Special-purpose funds and target financing (87, 88, 89)	430	46114	285080
Settlements with shareholders (75)	450		
Profit			
used in the accounting year (81)	481		801596
of accounting year (80)	482		801596
Total for Section I	**490**	**1887864**	**5443496**
II LONG-TERM LIABILITIES			
Bank loans (92)	500		
Borrowed funds (95)	510		
Total for Section II	**530**		
III SETTLEMENTS AND OTHER LIABILITIES			
Settlements with creditors			
for goods, works and services payment is not due (62, 76)	630	3842	12740
budget (68)	670	26904	50565
wage payments (70)	700	20624	21669
with other creditors (71, 76)	720	1918	2873
Total for section III	**750**	**145514**	**150488**
BALANCE (sum of lines 495, 530, 750)	**760**	**2033378**	**5593984**

Form No 2

I Financial results

Indicator	Line code	Gains	Losses
Revenue (gross income)	10	6563282	
VAT	15		1093902
Production costs	40		4711037
Results from sales of primary products	50	758343	
Results from sales of other products	60	13961	128
Revenues and expenses from other operations	70	29420	
Total gains and losses	80	6606663	5805067
Pre-tax income or loss	90	801596	
Actual volume of production	100	6302803	

85

Balance of enterprise
as of October 1, 1997

			Codes
		Form No 1	1801001
		Date (year, month, date)	1
Enterprise	Yalta meat processing plant		443714
Territory	Ukraine		
Ownership form	collective		
State authority	none		
Type of activity	industry, commerce		
Unit of measurement	thousand Hr	Check sum	

Address 1, Isobilna str, Yalta

ASSETS	Line code	Beginning of year	End of reporting period
1	2	3	4
I FIXED ASSETS AND OTHER NON-CURRENT ASSETS			
Fixed assets			
residual value	10	3624 1	3997 2
depreciation (02)	11	2547 5	2623 4
original cost (01)	12	6171 5	6620 6
Work-in-process capital investments (33, 35, 61)	30	30 4	34 5
Equipment (07)	35	49 3	205 9
Long-term financial investments (58)	40		
Settlements with shareholders (75)	50		
Total for Section 1	**70**	**3895 3**	**4426 5**
II INVENTORIES AND COSTS			
Production stock (05-08, 10)	80	968 7	564 4
Low - value and fast - depreciating items			
residual value	100	13 4	12 3
Expenses of future periods (31)	120		
Finished goods (40)	130	25 7	25 8
Goods			
buying cost (41)	140	107 3	217 5
Total for Section II	**150**	**1117 9**	**827 4**
III CASH, SETTLEMENTS AND OTHER CURRENT ASSETS			
Goods shipped			
payment is not due (45)	160		
Settlements with debtors			
for goods, works and services payment is not due (62, 76)	170	254 3	151 1
with budget (68)	200	1 5	69 4

1	2	3	4
with employees under other transactions (73)	210	3 4	7 3
with other debtors	240	6 1	34 7
Cash			
cash (50)	260	0 5	8 1
settlement account (51)	270	295 9	287 4
currency account (52)	280	1	0 3
other monetary items (54, 55, 56)	290	2 8	6 3
Borrowed funds (82)	300		
Other current assets	310	17 4	3
Total for section III	**320**	**580 8**	**657 4**
BALANCE (sum of lines 070, 150, 320, 330 and 340)	**330**	**5594**	**5911 3**

LIABILITIES	Line code	Beginning of year	End of reporting period
1	2	3	4
1 SOURCES OF OWN AND SIMILAR FUNDS			
Statutory fund (capital) (85)	400	1841 8	1841 8
Reserve fund (88)	410	27 8	27 8
Capital financing (93, 94)	420		
Special-purpose funds and target financing (87, 88, 89)	430	285 1	507 6
Settlements with shareholders (75)	450		
Profit			
used in the accounting year (81)	481		185 6
of accounting year (80)	482		500 9
Total for Section I	**490**		
II LONG-TERM LIABILITIES	**495**	**5443 5**	**5717 1**
Bank loans (92)	500		
Borrowed funds (95)	510		
Total for Section II	**530**		
III SETTLEMENTS AND OTHER LIABILITIES			
Settlements with creditors			
for goods, works and services payment is not due (62, 76)	630	12 7	13 8
budget (68)	670	50 6	21 7
wage payments (70)	700	21 7	29 6
with other creditors (71,76)	720	2 9	1
Total for section III	**750**	**150 5**	**194 2**
BALANCE (sum of lines 495, 530, 750)	**760**	**5594**	**5911 3**

Report on the financial results for 9 months of 1997

			Codes
		Form No 2	1801001
		Date (year, month, date)	1
Enterprise	Yalta meat processing plant		443714
Territory	Ukraine		
Ownership form	collective		
State authority	none		
Type of activity	industry		
Unit of measurement	thousand Hr	Check sum	

I Financial results

Indicator	Line code	Gains	Losses
Revenue (gross income)	10	5303360	
VAT	15		794044
Production costs	40		4044887
Results from sales of primary products	50	464429	
Results from sales of other products	60	2745	
Revenues and expenses from other operations	70	11365	
Total gains and losses	80	5341328	4838931
Pre-tax income or loss	90	562397	
Actual volume of production	100		

Form No 11 mtp

The reporting organization Yalta meat processing plant

Ownership form lease

Address 1, Isobilna str, Yalta

REPORT ON THE FUEL, THERMAL ENERGY AND ELECTRIC POWER USE in January - December 1995

1 Fuel (as tce - 7000 Ccal/kg)

Types of products and work	Unit	Product code by ZKP	Line number	Production output/ work completed	Actual use per unit of production		Use per overall production output for the reporting period
					for the same period of the previous year	for the reporting period	Actual
Thermal energy	Gcal		30	2550	169 5	169 5	432
Other industrial use of boiler fuel			9010				250
Total industrial use of boiler fuel			9100				657
Domestic use			9200				40
Total use of boiler fuel (lines 9100+9150+9200)			9300				722

2 Thermal energy (steam and hot water)

Types of products and work	Unit	Product code by ZKP	Line number	Production output/ work completed	Actual use per unit of production		Use per overall production output for the reporting period
					for the same period of the previous year	for the reporting period	Actual
Meat and 1st grade by products	tonnes		2470	155	710 7	710 7	110
Packed meat	thou cans		2540		583 1	583 1	
Sausages	tonnes		2480	1404	1053	1053	1478
Other industrial use			9010				792
Total industrial use			9100				
Domestic use			9200				170
Total use (lines 9100+9200)			9300				2550
Sources of own supply	Gcal						
from boiler units			9720	2550			

92

3 Electric power

Types of products and work	Unit	Product code by ZKP	Line number	Production output/ work completed	Actual use per unit of production		Use per overall production output for the reporting period
					for the same period of the previous year	for the reporting period	Actual
Meat and 1st grade by products	tonnes		2470	155	59	59	9
Sausages	tonnes		2480	1404	60 3	60 3	85
Packed meat	thou cans		2540		36 3	36 3	
Thermal energy production	Gcal		30	2550	15 6	15 6	40
Refrigeration	Gcal		2530	1038	892 5	892 5	926
Other industrial use			9010				12
Total industrial use			9100				
Domestic use			9200				48
Overall use (lines 9100+9200)			9300				1120

Form No 11 mtp

The reporting organization Yalta meat processing plant

Ownership form joint-stock company

Address 1, Isobilna str , Yalta, Ukraine

REPORT ON THE FUEL, THERMAL ENERGY AND ELECTRIC POWER USE FOR 1996

1 Fuel (as tce - 7000 Ccal/kg)

Types of products and work	Unit	Product code by ZKP	Line number	Production output/ work completed	Actual use per unit of production		Use per overall production output for the reporting period
					for the same period of the previous year	for the reporting period	Actual
Thermal energy	Gcal		30	3480	169 5	169 5	590
Other industrial use of boiler fuel			9010				129
Total industrial use of boiler fuel			9100				719
Domestic use			9200				40
Total use of boiler fuel (lines 9100+9150+9200)			930				759

2 Thermal energy (steam and hot water)

Types of products and work	Unit	Product code by ZKP	Line number	Production output/ work completed	Actual use per unit of production		Use per overall production output for the reporting period
					for the same period of the previous year	for the reporting period	Actual
Meat and 1st grade by products	tonnes		2470	515	710 7	710 7	366
Sausages	tonnes		2480	1262	1053	1053	1329
Other industrial use			9010				1595
Total industrial use			9100				3290
Domestic use			9200				190
Total use (lines 9100+9200)			9300				3480
Sources of own supply	Gcal		9710				
from boiler units			9720	3480			

94

3 Electric power

Types of products and work	Unit	Product code by ZKP	Line number	Production output/ work completed	Actual use per unit of production		Use per overall production output for the reporting period
					for the same period of the previous year	for the reporting period	Actual
Meat and 1st grade by products	tonnes		2470	515	59	59	30
Sausages	tonnes		2480	1262	60 3	60 3	76
Thermal energy production	Gcal		30	3480	15 6	15 6	54
Refrigeration	Gcal		2530	954	892 5	892 5	852
Other industrial use			9010				28
Total industrial use			9100				
Domestic use			9200				42
Overall use (lines 9100+9200)			9300				1082

Form No 11 mtp

The reporting organization Yalta meat processing plant

Ownership form joint-stock company

Address 1, Isobilna str , Yalta, Ukraine

REPORT ON THE FUEL, THERMAL ENERGY AND ELECTRIC POWER USE FOR 9 MONTHS OF 1997

1 Fuel (as tce - 7000 Ccal/kg)

Types of products and work	Unit	Product code by ZKP	Line number	Production output/ work completed	Actual use per unit of production in thousand in		Use per overall production output for the reporting period
					for the same period of the previous year	for the reporting period	Actual
Thermal energy	Gcal		30	2235			99928
Other industrial use of boiler fuel			9010				299037
Total industrial use of boiler fuel			9100				
Domestic use			9200				99928
Total use of boiler fuel (lines 9100+9150+9200)			9300				398965

2 Thermal energy (steam and hot water)

Types of products and work	Unit	Product code by ZKP	Line number	Production output/ work completed	Actual use per unit of production		Use per overall production output for the reporting period
					for the same period of the previous year	for the reporting period	Actual
Sausages	tonnes			683	2212	2212	1511
Meat and 1st grade by products	tonnes			201	448	448	90
Food fats	tonnes			16	1187	1187	19
Technical fats	tonnes			10	1176	1176	12
2nd grade by products	tonnes			36	448	448	16
Bone meal	tonnes			64	420	420	27
Other industrial use			9010				560
Total industrial use			9100				1675
Domestic use			9200				560
Total use (lines 9100+9200)			9300				2235
Sources of own supply	Gcal		9710				
from boiler units			9720	2235			

3 Electric power

Types of products and work	Unit	Product code by ZKP	Line number	Production output/ work completed	Actual use per unit of production		Use per overall production output for the reporting period
					for the same period of the previous year	for the reporting period	Actual
Use for production	tonnes			1010	61	59	59
Thermal energy production	Gcal		30	2235	16	15	35
Refrigeration	Gcal			674	894	878	591
Other industrial use			9010				
Total industrial use			9100				687
Domestic use			9200				78
Overall use (lines 9100+9200)			9300				765

Appendix No 1 to Contract No 1 of November 28, 1996
(Excerpts)

Electric power supply and demand for 1997

1 "To Subscriber" open joint-stock company "Yalta meat processing plant"

- Subscriber should pay in advance for the allocated volume of electric power supply in terms established by the Electric power supply organization,
- supervision over the allocated volume of power supply will be carried out on monthly basis,
- advance payment should be calculated independently by the Subscriber at the US$ exchange rate of the previous settlement at the dates according to the table,
- revision of accounts should be made at the settlement date - the 26th day of each month

Electric power use

Year	Use by quarters (thousand kWh)				Total (thousand kWh)
1994	i - 184 0	ii - 345 0	iii - 637 0	iv - 362 0	1528
1995	i - 200 1	ii - 316 2	iii - 368 5	iv - 274 6	1132 4
1996	i - 197 5	ii - 259 2	iii - 372 3	iv - 286 0	1115 1

Request and limits for 1997(in thousand kWh)

Item	1 quarter	2 quarter	3 quarter	4 quarter	Total
Request	250	320	404	286	**1260**
Limit	215	270	380	260	**1130**

Advance payment before the first day of the month - 90%

1997	January	February	March	April	May	June	Jule	August	September	October	November	December
Supply in thousand kWh	80	80	55	80	90	100	120	150	110	95	90	80

98

Operation chart

Boiler type DKVR - 2 5/13Registration number 3007/2757 Burners GMGm-1 5

Fuel Natural Gas

No	Items	Designation	Unit	Boiler load			
				30%	59%	70%	77%
1	2	3	4	5	6	7	8
1	Boiler capacity	D_B		0 75	1 44	1 71	1 925
2	Steam pressure in drum	P_D		3	6	6	7
3	Fuel pressure						
	- in pipeline	P_P		360	360	400	550
	- before burners	P_B		40	150	200	230
4	Air pressure						
	- after fan	P_A		0	0	0	0
5	Feedwater pressure						
	- at economizer input	P_{WEI}		10 4	10 6	10 6	10 6
6	Vacuum						
	-after boiler	S_B		0	0	0	0
	-after economizer	S_E		0	0	0	0
	-in combustion chamber	S_{CC}		2 5	2 5	2 5	2 5
7	Feedwater temperature						
	- at economizer inlet	T_{EI}		100	100	100	100
	- at economizer outlet	T_{EO}		132	132	132	132
8	Temperature of saturated steam	T_S		132 88	158 08	158 1	164 17
9	Temperature of exhaust gas						
	- after boiler	T_{AB}		222	259	277	300
	- after economizer	T_{AE}		140	190	210	237
10	RO2 content in exhaust gas	RO2		6 2	8 9	9 6	9 9
11	CO content in exhaust gas	CO		0	0	0	0 01
12	Oxygen content	O2		10	5 2	3 9	3 5
13	Excess air coefficient	a_{eg}		1 82	1 29	1 2	1 17
14	Internal heat loss	q_{in}		3	3	3	3

1	2	3	4	5	6	7	8
15	Heat losses						
	- with exhaust gas	q2		8 6875	8 9775	9 438	10 434
	-into environment	q5		7 6667	3 8983	3 2957	2 987
	- by incomplete combustion	q3		0	0	0	0 018
16	Gross efficiency of boiler	n		83 643	87 121	87 274	86 561
17	Fuel use by gauge	bfg		129 78	244 01	275 83	291 75
18	Specific fuel use per 1 Gcal of heat	B_{nhp}		150 03	144 04	143 78	144 97
19	NOX concentration at normal level & alpha=1	CNOxa=1		193 37	199 81	209 5	213 67
20	CO concentration at normal level & alpha=1	CCOa=1		20 355	21 257	13 094	95 959
21	Specific emission per 1 Gcal of htat of						
	- nitrogen oxides	b''NO_X		230 58	228 75	239 42	246 19
	- carbon oxide	b''CO		24 334	24 398	15 002	110 85
22	Specific emission per 1 thousand cubic meter/1 tonne of fuel						
	- nitrogen oxides,	b'NO_X		0 7338	0 772	0 8481	0 9095
	- carbon oxide	b'CO		0 077	0 082	0 053	0 4095
23	Burner type			1 5	1 5	1 5	1 5
24	Number of operated burners			2	2	2	2

Note Operation chart is drawn up at QN= 7969Ccal per cubuc meter

Operation chart

Boiler type DKVR - 2 5/13 Registration number 2911 Burners GMGm-1 5

Fuel Natural Gas

No	Items	Designation	Unit	Boiler load			
				30%	59%	70%	77%
1	2	3	4	5	6	7	8
1	Boiler capacity	D_B		0 75	1 44	1 71	1 98
2	Steam pressure in drum	P_D		3	6	6	7
3	Fuel pressure						
	- in pipeline	P_P		360	360	400	550
	- before burners	P_B		40	150	200	250
4	Air pressure						
	- after fan	P_A		2	34	47	60
5	Feedwater pressure						
	- at economizer input	P_{WEI}		10 4	10 6	10 6	10 6
6	Vacuum						
	- after boiler	S_B		0	0	0	0
	- after economizer	S_E		2 5	2 5	2 5	1 5
7	Feedwater temperature						
	- at economizer inlet	T_{EI}		100	100	100	100
	- at economizer outlet	T_{EO}		132	132	132	132
8	Temperature of saturated steam	T_S		132 88	158 08	158 1	164 17
9	Temperature of exhaust gas						
	- after boiler	T_{AB}		230	256	272	300
	- after economizer	T_{AE}		140	165	185	200
10	RO2 content in exhaust gas	RO2		5 4	6 2	6 8	7 1
11	CO content in exhaust gas	CO		0	0	0	0
12	Oxygen content	O2		11 4	10	8 9	8 3
13	Excess air coefficient	a_{eg}		2 1875	1 9091	1 7355	1 6535
14	Internal heat loss	q_{in}		3	3	3	3

1	2	3	4	5	6	7	8
15	Heat losses						
	- with exhaust gas	q2		9 8125	10 425	10 965	11 285
	- into environment	q5		7 6667	3 9931	3 3626	2 904
	- by incomplete combustion	q3		0	0	0 01	0 01
16	Gross efficiency of boiler	n		82 518	85 578	85 663	85 805
17	Fuel use by gauge	bfg		159 65	311 06	358 44	391 4
18	Specific fuel use per 1 Gcal of heat	B_{nhp}		152 07	146 63	146 49	146 25
19	NOX concentration at normal level & alpha=1	CNOxa=1		82 956	103 43	107 19	139 75
20	CO concentration at normal level & alpha=1	CCOa=1		23 702	31 028	75 218	44 79
21	Specific emission per 1 Gcal of htat of						
	- nitrogen oxides	b''NO_X		100 27	120 54	124 8	162 44
	- carbon oxide	b''CO		28 721	36 255	87 803	52 198
22	Specific emission per 1 thousand cubic meter/1 tonne of fuel						
	- nitrogen oxides,	b'NO_X		0 265	0 3197	0 3411	0 4725
	- carbon oxide	b'CO		0 076	0 096	0 24	0 1518
23	Burner type			1 5	1 5	1 5	1 5
24	Number of operated burners			2	2	2	2

Note Operation chart is drawn up at QN= 7969Ccal per cub1c meter

D.2 Totalized indicators of energy use according to the plant data

Energy use at the Yalta meat processing plant in 1996 and 9 months of 1997

	Energy use, kWh		Natural gas use, 1000 cubic meters		Water use, cubic meters	
Month	**1996**	**1997**	**1996**	**1997**	**1996**	**1997**
January	77703	73504	79	44	2380	1034
February	71615	60497	63	45	2394	1875
March	48215	54837	52 5	43	2387	1680
April	77693	78100	53	38	2385	1457
May	83695	82837	47	32	2389	1363
June	97836	92689	45	36	2387	1790
July	115840	107187	69 8	42	2690	1725
August	148725	116765	80 4	35	2800	1915
September	107740	99004	83 3	34	2550	1675
October	87763	80723	76 9	32	2506	1775
November	87005		51		2405	
December	77585		50		2270	
Total	**1081415**		**750 9**		**29543**	

D.3 Results of measurements of parameters of energy

As the result of the analysis of the steam distribution system it was established that in spite of insulation of the main steam pipelines many branch pipes and condensate piping network do not have such insulation

Details of non-insulated piping are given in the table

Purpose of piping	Location	Length, meters	Diameter, mm	t, ^{0}C
Steam	Thermal unit	56	41	150
Steam	Thermal unit	25	55	150
Steam	Thermal unit	25	34	150
Condensate	Thermal unit	160	55	105
Condensate	Thermal unit	70	27	105
Steam	Thermal unit	80	34	150
Steam	Thermal unit	30	27	150
Steam	Boiler room	80	55	150
Steam	Boiler room	30	81	150
Steam	Boiler room	25	41	150
Condensate	Boiler room	14	41	105
Condensate	Boiler room	30	55	60

E. PLANT PHOTOGRAPHS

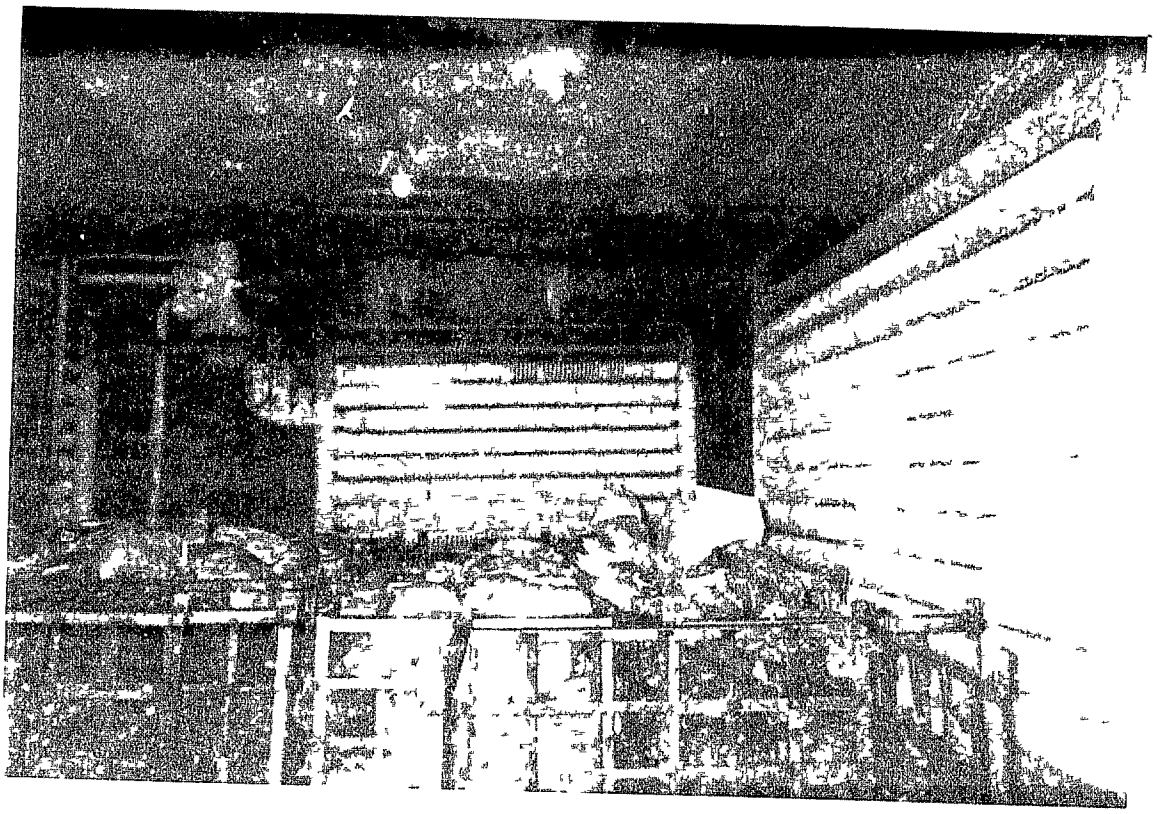

Холодильная камера мясозавода
Meat plant cold room

Обмерзание потолка в холодильной камере
Ceiling icing in cold room

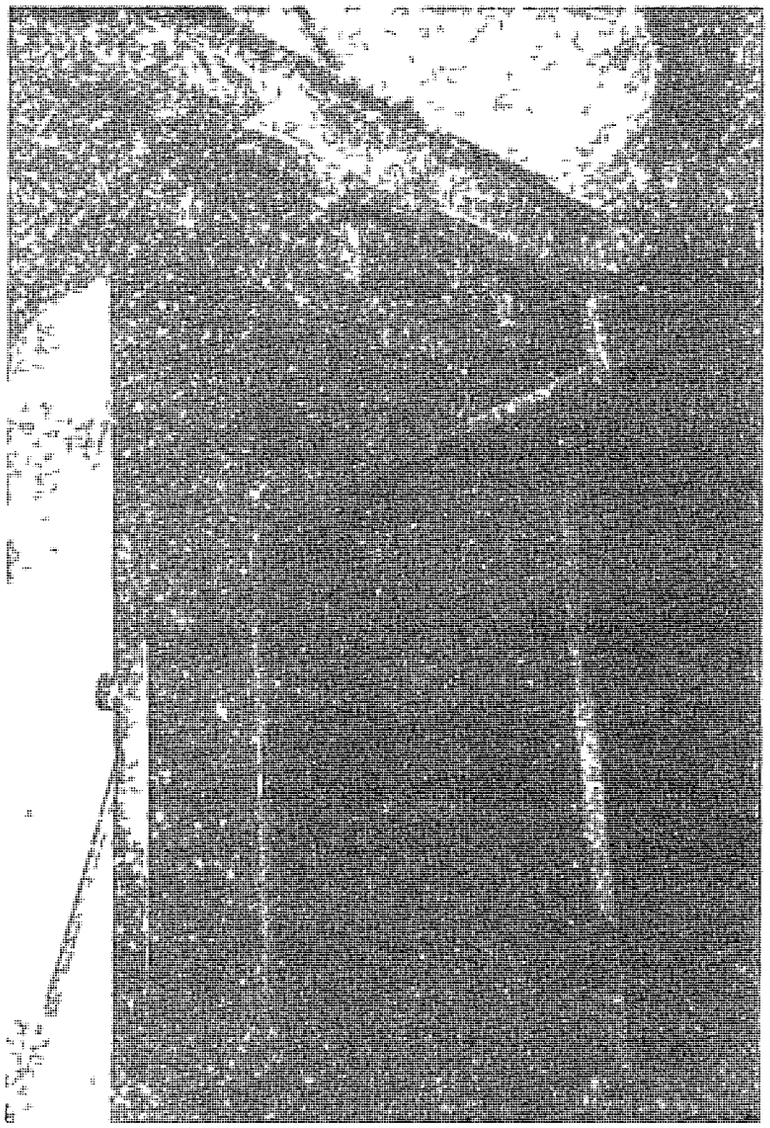

Дверной проем термокамеры
Thermal treatment unit door

10

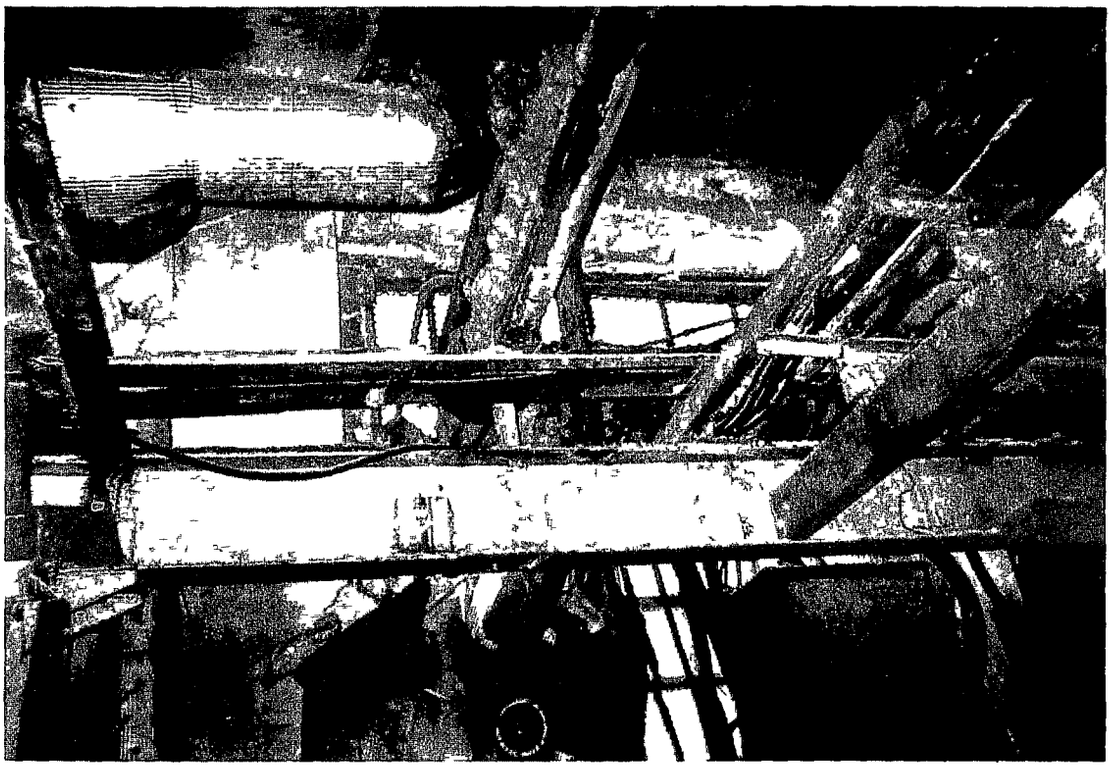

Фрагмент изоляции паропроводов на участке термокамер
Section of steam piping insulation in the thermal treatment workshop

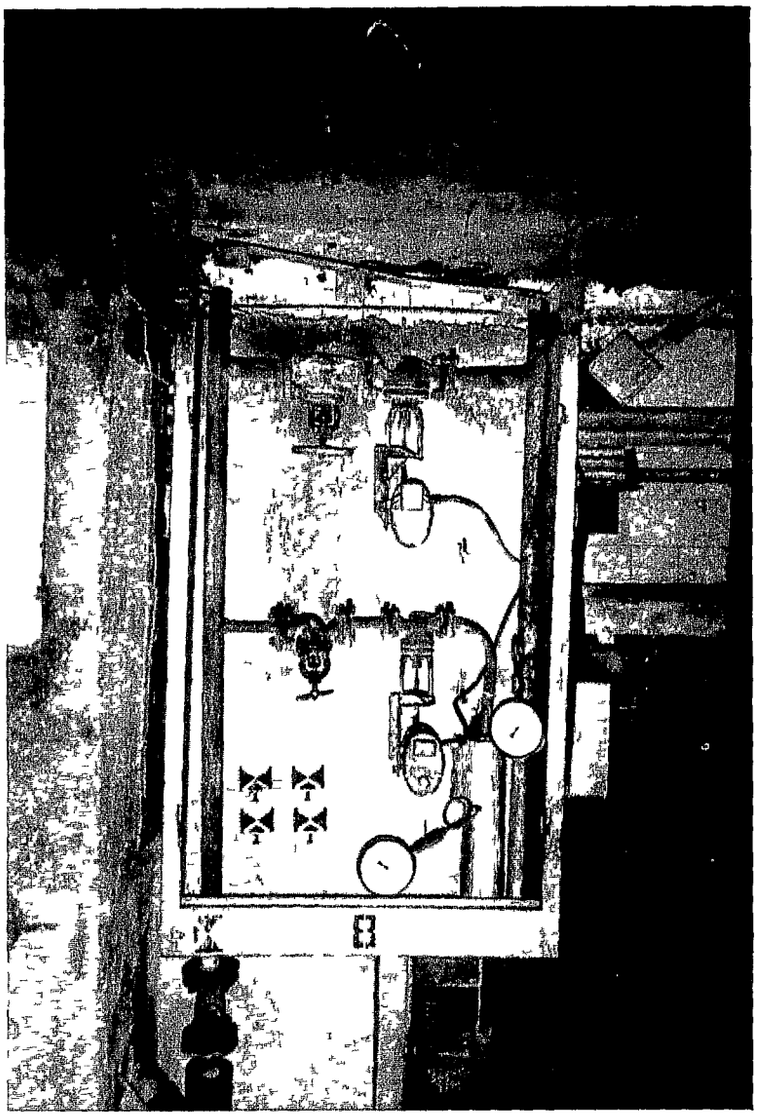

Пункт регулирования подачи пара в термокамеры
Thermal treatment steam supply control unit

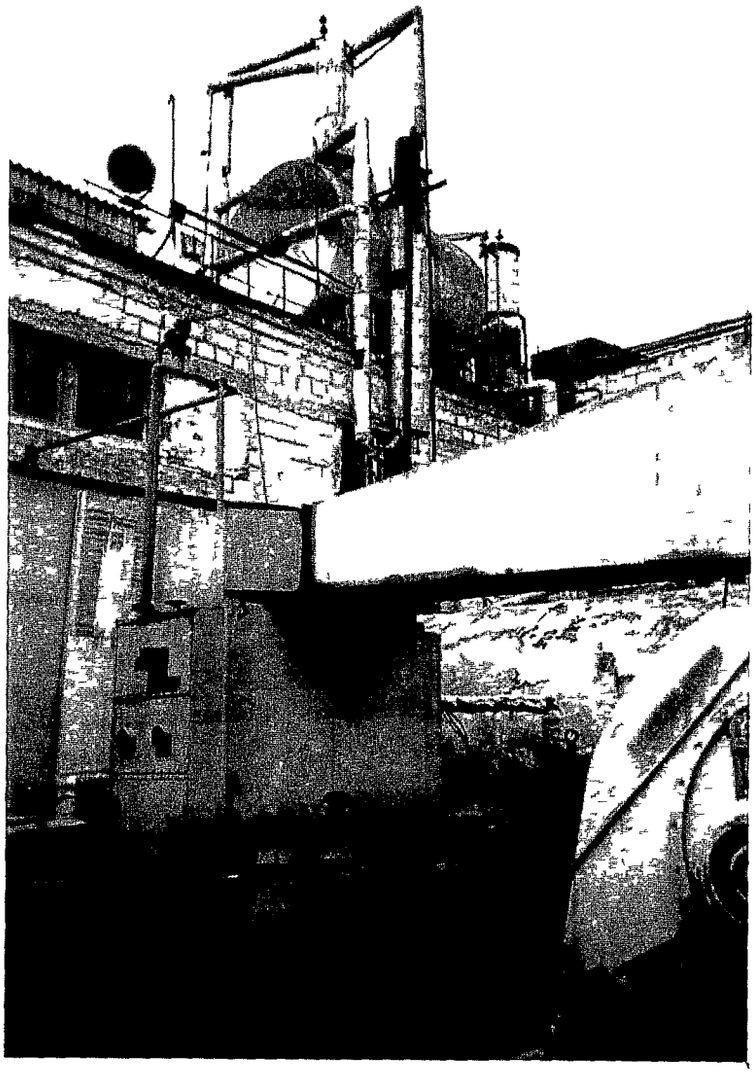

Фрагмент котельной
Boiler room section

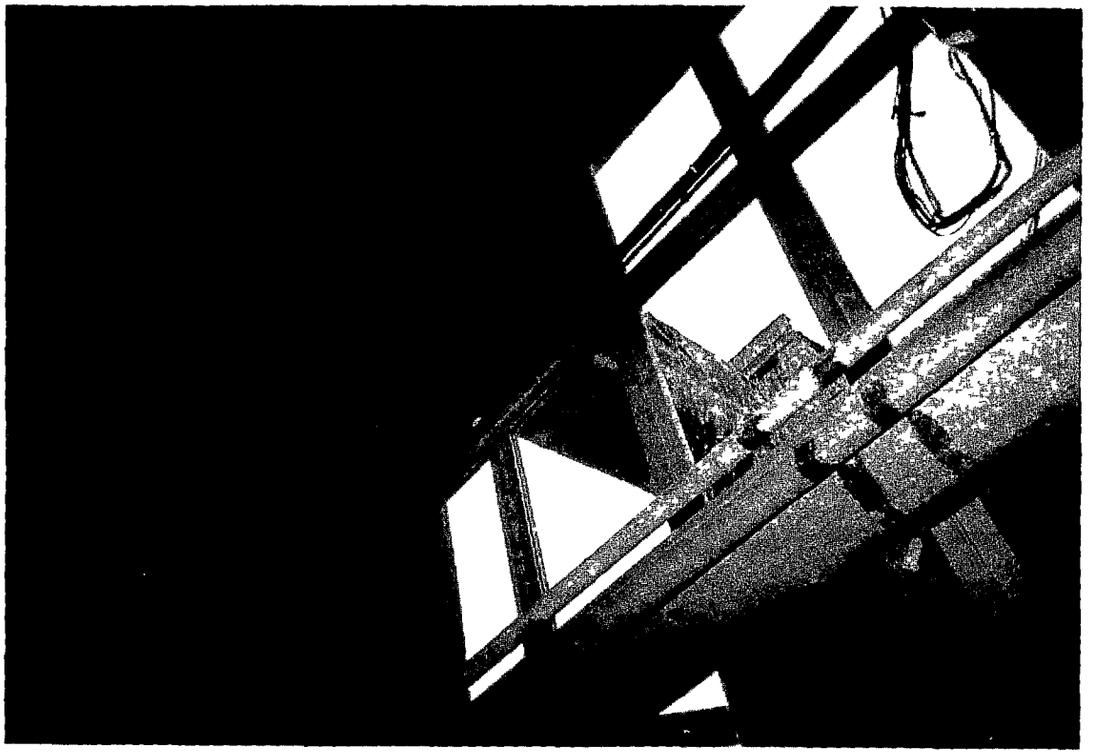

Узел забора дутьевого воздуха для котла
Boiler air intake

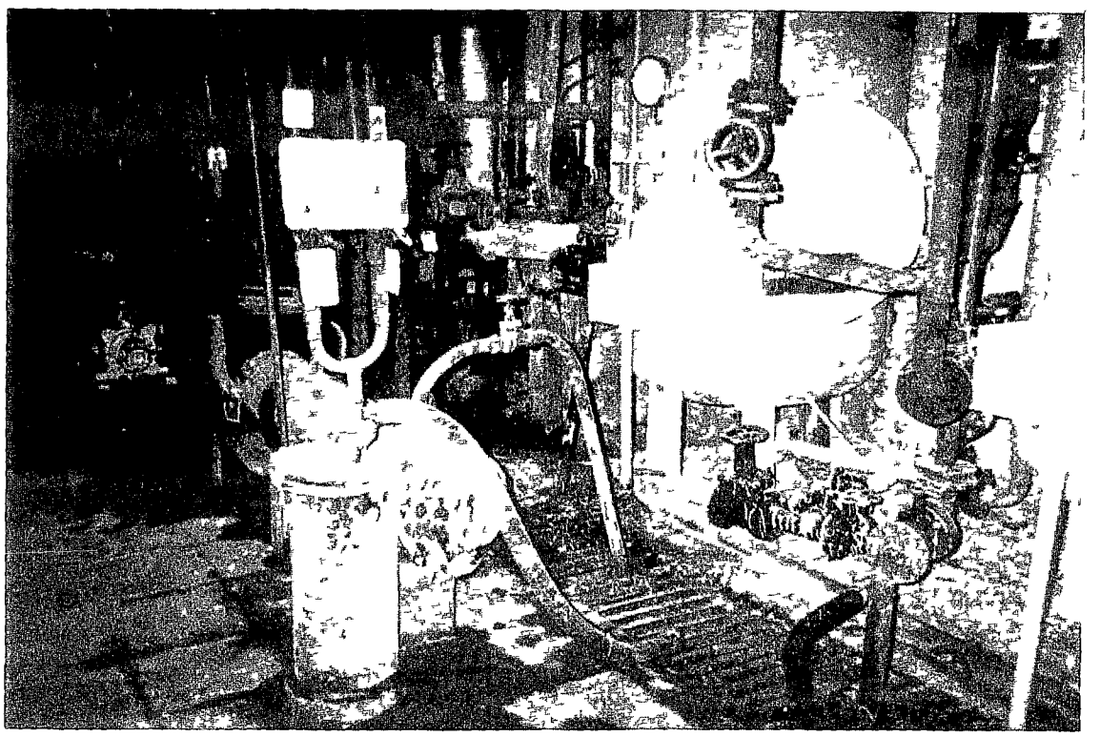

Паропроводы в котельной мясозавода
Steam piping in the milk plant boiler room

F. CONVERSION FACTORS

Currency rates of exchange

1 hrivnia - local currency unit
1hrivnia = US$0 54 as of December 1997

Conversion factors

Heat

1 cal = 4 187 J
1 Ccal = 4 187 kJ = 3 968 BTU
1 Gcal = 4 187 x 10^3 = 4 187 GJ
1 BTU = 1055 J = 1 055 kJ = 1 055 x 10^3 MJ

Power

1 W = 3 6 x 10^3 J = 3 6 kJ
1 kW = 3 6 x 10^3 kJ = 3 6 MJ = 860 Ccal
1 MW = 3 6 x 10^3 MJ = 860 Ccal
1 Ccal = 1 163 x 10^3
1 Gcal = 1163 kW = 1 163 MW
1 kW = 0 102 HP (boiler)
1 kW = 1 34 HP (mech)

Pressure

1 kg/cm = 1 atm
1 atm = 101 325 kPa = 0 1 Mpa
1 bar = 10^5 Pa = 100kPa = 0 1 Mpa

Length

1 mm =0 03937 in = 0 00328 ft
1 cm = 0 3937 in = 0 0328 ft
1 m = 3 937 in = 3 281 ft

Weight

1 gram = 2 2046 x 10^3 lb
1 kg = 2,2046 lb
1 t = 1000kg = 2 2046 x 10^3 ft

Area

1 cm^2 = 0 155 square in = 1 076 x 10^3 ft
1 m^2 = 1 55 x 10^3 square in= 10 76 square ft

Volume

1 m^3 = 35 31 cu ft = 1000 l
1l = 35 31 x 10^3 cu ft
1l = 0 264 US gal

Heat content

1 kJ/kg = 0 43 BTU/lb
1 kJ/m^3 = 26 84 x 10^3 BTU/cu ft
1 MJ/m^3 = 26 84 BTU/cu ft
1 Ccal/m^3 = 4,187 kJ/m^3 = 0 112 BTU/cu ft

Temperature

^{0}C = 0 56 (^{0}F-32)

G. ABBREVIATIONS AND UNITS OF MEASUREMENT

ABBREVIATIONS

CIS - Commonwealth of Independent States
ECO - energy conservation opportunity
ESCO - energy service company
etc - et cetera
Hr - hrivnia
Fig - figure
i d - id est
JSC - joint-stock company
mln - million
JSC - joint-stock company
Qty - quantity
tel - telephone
thou - thousand
VAT - value-added tax
US - United States
USAID - United States Agency of International Development

UNITS OF MEASUREMENT

BTU - British thermal unit
^{0}C - degrees Celsius
cm^2 - centimeter squares
^{0}F - degrees Fahrenheit
g - gram
Gcal - gigacalory
GJ - gigajoule
h - hour
kcal - kilocalory
kg - kilogram
kgf - kilogram-force
kV - kilovolt
kV-A - kilovolt-ampere
kW - kilowatt
kW h - kilowatt hour
Lm - lumen
m - meter
m^2 - meter squared
m^3 - meter cubed
min - minute
MJ - megajoule
mm H2O - millimeters of the water column
MW - megawatt
t - tonne
tce - tonne of coal equivalent (fuel)
t s f - tonne of standard fuel = tonne of coal equivalent
t/h - tonnes per hour
W - watt